Two Rivers Lumber Co., LLC
Prevention of Significant Deterioration Application

October 17, 2016

GBMc & Associates
Strategic Environmental Services

Prevention of Significant Deterioration Application

Prepared for:

Two Rivers Lumber Co., LLC
Industrial Park Road
Demopolis, AL

Prepared by:

GBMc & Associates
219 Brown Lane
Bryant, AR 72022

October 17, 2016

CONTENTS

Application Summary
PSD Applicability
BACT Analysis
Fugitive Emission Control Analysis
Process Description
Process Flow Diagram
Plot Plan
Area Map
ADEM Required Forms:
- ADEM 103: Facility Identification Form
- ADEM 105: Process Information for Sawmill Fugitive Sources
- ADEM 105: Process Information for Dual Path Kiln No. 1 and Condensate Evaporator No. 1
- ADEM 105: Process Information for Dual Path Kiln No. 2 and Condensate Evaporator No. 2
- ADEM 105: Process Information for Planer Mill
- ADEM 110: Application for Air Pollution Control Device- Planer Mill Cyclofilter
- ADEM 104: Fuel Burning Equipment- Not Applicable to Facility
- ADEM 106: Waste Disposal- Not Applicable to Facility
- ADEM 437: Compliance Schedule- Not Applicable to Facility
- ADEM 445: PSD Project Information

Emission Summary
Emission Calculations
Proposed Monitoring and Recordkeeping Requirements

APPENDICES

Appendix A Emission Factor Supporting Documentation
- A1: TCEQ Wood Industries Emission Factors
- A2: ODEQ Wood Products Particulate Fraction
- A3: NCDENR Wood Kiln Emission Factor Sheet for Softwood Steam Heated
- A4: ADEQ Memo for Lumber Kiln VOC Emissions
- A5: EPA Region 10 Memo on Sawmill Emissions
- A6: AP-42 Section 1.4 Natural Gas Combustion
- A7: Constituents of Kiln Condensate

Appendix B Cyclofilter Manufacturer Specifications
Appendix C Ambient Air Monitoring Station Data in Sumter County
Appendix D RBCL Results for BACT Analysis

Application Summary

APPLICATION SUMMARY

Two Rivers Lumber Co., LLC (Two Rivers Lumber) is submitting this application to request authorization from the Alabama Department of Environmental Management (ADEM) to construct a new sawmill under a Prevention of Significant Deterioration (PSD) permit. The facility falls under the Standard Industrial Classification code of 2421 for general sawmills and planing mills. This application addresses all ADEM requirements for construction authorization.

With this application, Two Rivers Lumber proposes to construct and operate a sawmill located on Industrial Park Road, eight miles south of Demopolis, in Marengo County, Alabama.

The proposed sawmill will be constructed in phases with the final capacity of 200 million board feet (MMBF) of lumber per year. The mill will include the following major components:

- Sawmill,
- Two Natural Gas Fired Continuous Lumber Drying Kilns,
- Two Natural Gas Fired Kiln Condensate Evaporators
- Planer Mill,
- Secondary Product Storage Bins, and
- Ancillary Units.

Additionally, the following mill activities qualify as Insignificant Activities in accordance with ADEM's Section 2 Trivial and Insignificant Activities dated September 23, 2009:

- Log Debarking,
- Log Bucking,
- Bark Hogging,
- Green Wood/Lumber Chipping

To demonstrate these activities emit an insignificant amount of emissions, the emission calculations and an ADEM Form 105 has been included for each of these sources. Two Rivers Lumber requests individual permits each source ADEM determines to be significant.

The initial construction (Phase I) will consist of the construction and installation of all the major components of the sawmill with the exception of only one lumber drying kiln and one condensate evaporator in order to start mill operations as soon as possible with a production capacity of 100 MMBF per year. Phase II of the project is planned to commence within a year of starting initial operation, which includes construction and installation of the second lumber drying kiln, associated equipment, and the second condensate evaporator. As the kilns are the production limiting process, installation of the second kiln in Phase II will increase mill production to the proposed 200 MMBF per year. Phase I construction is planned to start January 10, 2017 or immediately upon ADEM's approval of this application and permit issuance. Given the planned timing of the construction phases, both kilns are proposed within this initial application.

The total project will have the potential to emit regulated pollutants in excess of thresholds established by the Environmental Protection Agency (EPA) and the ADEM and thus is subject to PSD construction permitting requirements. The proposed sawmill will be PSD Major for Volatile Organic Compounds (VOC). In accordance with ADEM Admin. Code R. 335-3-4-.03(4) and 335-3-4-.04(5), new process emission sources that emit particulate matter (PM) are subject to ADEM Admin. Code R. 335-3-4-.03(1) and 335-3-4-.04(1), respectively. This regulation limits the allowable

PM emissions based on the following equations, known as the process weight rule (PWR). The PWR calculated allowable PM emissions exceed the PSD significant increase thresholds (see the emission summary section for more details on the PWR calculated allowable PM emissions). Therefore, a detailed discussion of PSD applicability is included in this application including discussion on the PWR based allowable potential to emit (PTE) calculated PM emissions compared to the requested PM emissions that were used for the PSD review in accordance with ADEM Admin Code R. 335-3-14-.04(2)(d). The requested PM PTE was determined to be below the PSD threshold triggering review. We submit this application with the assumption that PSD review is only required for VOC; thus, as required, the project includes Best Available Control Technology (BACT) for all permitted emission units emitting VOC. As there is no EPA approved methodology for evaluating the ozone standard on a local scale, modeling is not submitted for ozone or VOC.

The federal regulations applicable to the proposed sawmill are the PSD regulations (40 CFR 52.21) contained in the ADEM Admin Code R. 335-3-14-.04, National Emission Standard for Hazardous Air Pollutants (NESHAP) for Plywood and Composite Wood Products contained in 40 CFR 63 Subpart DDDD (PCWP MACT), and Title V Operating Permit regulations contained in 40 CFR 70. Of note, there are no New Source Pollutant Standards (NSPS) that apply to the facility.

The PCWP MACT was promulgated on July 30, 2004 and regulates only sources at facilities that are major sources of HAP. The PCWP MACT regulates HAP emissions from activities associated with manufacture of plywood and other composite wood products, including lumber kilns and onsite wastewater treatment operations specifically associated with plywood and composite wood products manufacturing such as kiln condensate evaporators in accordance with §63.2232. The PCWP MACT compliance requirements are specific to those process units specified in Tables 1A and 1B of the subpart or control units used for the purpose of HAP control, which do not apply to the condensate evaporators or lumber kilns. Processes that are not subject to the compliance options or work practice requirements specified in §63.2240, such as the lumber kilns and condensate evaporators, are specifically not required to comply with the compliance options, work practice requirements, performance testing, monitoring, startup shutdown maintenance (SSM) plans, and recordkeeping or reporting requirements of this subpart, or any other requirements in 40 CFR 63 Subpart A, except for the initial notification requirements in §63.9(b) in accordance with §63.2252.

Therefore, in accordance with §63.9(b)(1)(iii), this application serves as the initial notification of intention to construct two dual path lumber kilns and two condensate evaporators which are affected sources subject to the PCWP MACT. Additionally, in accordance with ADEM policy, since the lumber kilns and condensate evaporators are subject to the PCWP MACT, air toxics emitted from the kilns and evaporators do not require air toxic screening.

ADEM has general industrial process emission estimation methodologies for calculating the allowable potential to emit (PTE) for particulate matter (PM) for new sources in accordance with ADEM Admin. Code R. 335-3-4-.03(4) and 335-3-4-.04(5). However, industry and source specific emission factors were used to estimate the requested PTE for the sources at the mill using information available from a range of sources including: AP-42, EPA regional offices, and other state regulatory agencies. Use of each of these resources are further explained within the emission calculations with copies of the documents utilized included within the application's appendices.

PSD Applicability

PSD APPLICABILITY

A new source is a "major stationary source" under the Prevention of Significant Deterioration (PSD) regulation in ADEM Admin Code R. 335-3-14-.04(2)(a) if any source emits or has the potential to emit over 100 tons per year (tpy) of at least one New Source Review (NSR) regulated pollutant and is one of the 28 specifically listed industrial source categories. Sawmills are not on the list of specified categories; therefore, the applicable definition of "major stationary source" under the PSD regulations is any source that emits or has the potential to emit 250 tpy or more of at least one NSR regulated pollutant.

Two Rivers Lumber is a new source and has a potential to emit of 380.2 tpy of volatile organic compound (VOC) (a NSR regulated pollutant). Therefore Two Rivers Lumber is a major stationary source and must evaluate a major modification will occur for each NSR regulated pollutant.

Major Modification

Under the current PSD/NSR rules in ADEM Admin Code R. 335-3-14-.04(1)(d), a project is only a major modification for a NSR regulated pollutant if it causes both:

- A significant emission increase, as defined in ADEM Admin Code R. 335-3-14-.04(2)(mm)
- A significant net emission increase, as defined in ADEM Admin Code R. 335-3-14-.04(2)(c) 335-3-14-.04(2)(w).

The first step in evaluating the PSD applicability for a proposed project is to calculate the emissions to determine whether a significant emission increase will occur. If a significant emission increase will not occur, then the modification is not a "major modification" and a determination of the contemporaneous net emissions increase is not required for that pollutant.

Significant Emission Increase

According to ADEM Admin Code R. 335-3-14-.04(1)(e), the procedure for calculating whether a significant emission increase will occur depends on the type of emission units being modified. These procedures are outlined in ADEM Admin Code R. 335-3-14-.04(1)(f)-(i). Two Rivers Lumber is a new source and only involves construction of new emission units, thus project emissions change results from the actual-to-potential test as defined ADEM Admin Code R. 335-3-14-.04(1)(g). The potential to emit (PTE) have been calculated in accordance with ADEM Admin Code R. 335-3-14-.04(2)(d). The baseline actual emissions (BAE) are equal to zero in accordance with ADEM Admin Code R. 335-3-14-.04(2)(uu)(3), since this is the initial construction and operation of the unit. The sum of the difference between the PTE and BAE are compared to the significant emission rate thresholds as defined in and ADEM Admin Code R. 335-3-14-.04(2)(w). The calculated actual PTE for the new facility are shown in the following table and compared to the Significant Emission Rate (SER).

In accordance with ADEM Admin. Code R. 335-3-4-.03(4) and 335-3-4-.04(5), new process emission sources that emit particulate matter (PM) are subject to ADEM Admin. Code R. 335-3-4-.03(1) and 335-3-4-.04(1), respectively to estimate the allowable PM emissions. However, the allowable PTE for PM calculated using this approach significantly overestimates the facility's PM emissions indicating Two Rivers Lumber exceeds the PSD threshold for PM (see the Emission Summary section of the application for a more detailed explanation). Therefore, Two Rivers

Lumber requests the PM emission limits be set to the proposed PM emission rates as provided in this application using wood products industry emission factors and emission estimate methodology.

The PM PTE emissions based on the wood products industry accepted emission factors have been used to represent the actual PTE of the point sources at the facility in the PSD applicability evaluation in accordance with ADEM Admin Code R. 335-3-14-.04(1)(g). The potential emissions have been calculated in accordance with ADEM Admin Code R. 335-3-14-.04(2)(d), to determine the facility's PTE to compare to the significant emission rate thresholds as defined in and ADEM Admin Code R. 335-3-14-.04(2)(w). The calculated PTE for the new facility is shown in the following table and compared to the SER.

Changes	Potential Emission Limits (tpy)								
	NOx	**CO**	**SO_2**	**PM[1]**	**PM_{10}**	**$PM_{2.5}$**	**VOC as C /VOC as WPP1**	**Lead**	**GHG**
Total PTE	20.4	31.0	0.3	12.1	12.1	9.3	513.0/640.0	1.9E-04	44,120
Total BAE	0.0	0.0	0.0	0.0	0.0	0.0	0.0	0.0	0.0
New Project Emissions	**20.4**	**31.0**	**0.3**	**12.1**	**12.1**	**9.3**	**513.0/640.0**	**1.9E-04**	**44,120**
PSD SER	40	100	40	25	15	10	40	0.6	75,000
Contemporaneous Netting Required?	No	No	No	No	No	No	**Yes**	No	No

A significant emission increase will occur only for VOC. If contemporaneous emission decreases are available, emissions netting can be performed to determine if the overall net emissions increase for the pollutants is below their respective SERs (considering both contemporaneous and creditable increases and decreases). Because Two Rivers Lumber is a new source, there are no contemporaneous emission decreases available for consideration. Therefore, the evaluation of the significant emission increase as outlined above is sufficient.

As Two Rivers Lumber is subject to PSD permitting, review of the Best Available Control Technology (BACT) for the control of VOC was completed as required by ADEM Admin Code R. 335-3-14-.04(9)(b). The BACT Analysis of the application outlines the control technology analysis completed to ensure the application of BACT for VOC as the applicable PSD pollutant.

Additionally, the PSD requirement of an impact analysis of the ambient air impacts associated with the project was completed. The purpose of the analysis is to demonstrate that the emissions from the proposed new major stationary source, in conjunction with applicable emissions increases and decreases from existing and "proposed" new off-site sources, will neither cause nor contribute to a violation of the National Ambient Air Quality Standard (NAAQS). There are separate increment standards for Class I areas (Federal protected lands) and Class II areas (all other areas). A stationary source that is considered major for VOC or nitrogen oxide (NOx) shall be considered major for ozone in accordance with ADEM Admin Code R. 335-3-14-.04(2)(a)2. Therefore, a PSD impact analysis is required only for ozone of which VOC is a precursor; an impact analysis as directed by the ADEM is presented below.

[1] PM emissions are based on the proposed potential emissions as described above and in the emission summary section.

Ozone Impact Analysis (Modeling Protocol)

Both VOC and NOx are recognized as a precursors to ozone, which has an established NAAQS. Since the project has a significant emissions increase of VOC, an evaluation in terms of VOC effect on attainment status of ozone is required. Pursuant to ADEM Admin Code R. 335-3-14-.04(12)(a)(1), air quality monitoring must be conducted for each pollutant potentially emitted at a significant emission rate by the proposed source or modification. Therefore, a pre-construction ambient monitoring analysis would be required for ozone emissions, and monitoring data would be required to be submitted as part of the application. As demonstrated below the pre-construction monitoring is fulfilled with the existing monitoring stations operated by the ADEM and the Mississippi Department of Environmental Quality (MDEQ), as they are representative of the conditions at the proposed facility.

Appendix D of the ADEM Admin Code R. 335-3 (revised effective November 24, 2015) contains the Alabama non-attainment county-wide designations from the initial 1997 8-hr ozone NAAQS. However, there are no counties in Alabama or within 100 km of the facility that are in considered non-attainment for the 2008 8-hr ozone NAAQS. The nearest ADEM designated 8-hr ozone standard non-attainment county is Jefferson County 120 km from the facility. Therefore, there is no impact expected from the facility to any non-attainment counties in Alabama.

The ozone monitoring site that best represents the ozone concentration in the region surrounding the Two Rivers Lumber facility is the Ward, Sumter County, AL station (01-119-0003) as identified by the ADEM in a pre-application consultation on September 13, 2016. This monitor was based on the proximity to the facility and the similarity of the surrounding air shed to represent rural, background ozone values in the region of Two Rivers Lumber facility location. ADEM personnel provided the most recent three years of ozone monitoring data for the Ward, Sumter County, AL station on September 13, 2016 for this ozone impact analysis (see Appendix C for monitoring data). The table below summarizes the 4th high daily maximum 8-hour concentration averaged over 3 years (2013-2015) for Sumter County.

Location	County	Distance (km)	Ambient Air Monitoring of Background Ozone Concentration (ppm)			
			2013	2014	2015	3-Year (2013-2015) Average
Ward, AL	Sumter	32	0.058	0.058	0.057	0.058

The increase in ozone formation from the proposed Two Rivers Lumber facility is expected to be insignificant. The total potential emission increases associated with Two Rivers Lumber is 380.2 tpy VOC as C and 20.4 tpy NOx. This represents a total emitted VOC increase of 0.65% over a 2011 baseline (58,066 tpy) and a NOx increase of 0.90% over a 2011 baseline (2,262 tpy) from Marengo County as obtained from EPA AirData County Emissions Map, 2011 (http://www.epa.gov/air/emissions/). Only accounting for the baseline emissions from Marengo County, the ratio of VOC to NOx is 25.7:1. This approach is a conservative estimation of the VOC to NOx ratio as it does not account for the less industrially developed surrounding counties and other regional impacts. The proposed project will have a negligible impact on this ratio.

Based on the Marengo County surrounding area's low concentration of ozone, and attainment status along with the Two Rivers Lumber projected VOC emissions presenting a minor increase in total VOC emissions, there is no expected effect on the attainment status of the region.

Additional Impacts Analysis

The potential impact of the proposed sawmill's air pollutant emissions associated with construction and related growth are presented in this section as well as assessment of the impact on soil, vegetation, and visibility. A qualitative approach has been taken to these analyses for areas which do not have well established analytical techniques.

Construction and Growth Impacts

The proposed project has no effect on construction and growth impacts. During construction, Two Rivers Lumber will minimize the impact on the surrounding environment primarily focusing on reduction of the formation of fugitive particles.

The construction and operation of Two Rivers Lumber should not result in any noticeable residential growth in the area. This construction project will employ up to 95 new jobs. There is expected gradual commercial growth in the area, however, this growth is not expected to be directly due to Two Rivers Lumber.

Impact on Soil and Vegetation

The NAAQS are intended to protect the public welfare from adverse effects of airborne pollutants. This protection extends to soil and vegetation. Predicted concentrations of VOC resulting from the sawmill will not cause or contribute to violation of the NAAQS. Because the NAAQS were established to protect human welfare, no significant impacts on the soil are expected due to the proposed project. The sawmill will utilize best available control technology to reduce potential emissions of VOC.

The effects of air pollution on vegetation can be classified into three distinct categories: acute, chronic, and long-term. Acute effects are those resulting from a short exposure (< 1 month) to high concentrations. Chronic effects refer to those developed from exposure to a threshold level of pollutant over months or years. Long-term effects refer to abnormal changes in ecosystems and subtle physiological alterations in organisms. Both acute and chronic effects are the result of an air borne pollutant acting directly on an organism while long-term effects can be indirectly caused by secondary effects such as changes in soil pH.

In addition to BACT, Two Rivers Lumber will utilize good working practices for equipment associated with the proposed sawmill. The combination of BACT, good work practices, and minimal air quality impacts will result in minimal impact on the soil and vegetation in and around the site.

Impact on Visibility (Regional Haze Analysis)

One component of the PSD regulations includes the protection of air quality and air quality related values (AQRV) at potentially affected nearby Class I areas. Assessment of the potential impact to the visibility is required within 100 km of a Class I area. The nearest Class I area to the proposed sawmill is Sipsey Wilderness Area located in Franklin, Winston, and Lawrence counties, Alabama, approximately 207 km from the facility. Therefore, the distance between the proposed

sawmill and this Class I area is expected to have minimal effects on the visibility in this Class I area and an ambient impact assessment is not required.

Analysis of Endangered Species

An air quality impact analysis has been performed for ozone (for which VOC is a precursor). The sawmill will result in potential impacts below the NAAQS. It is possible that some endangered species may be present in Marengo County; however, through compliance with the NAAQS, Two Rivers Lumber does not expect the sawmill to have an impact on any endangered species. According to the U.S. Fish and Wildlife Service, the only currently endangered species possibly located in Marengo County are the Heavy Pigtoe clam, Ovate Clubshell clam, Southern Clubshell clam, and the Alabama sturgeon, all of which are aquatic species.

In addition to BACT, Two Rivers Lumber will utilize good working practices for equipment associated with the proposed sawmill. The combination of BACT, good work practices, and minimal air quality impacts will result in the sawmill having minimal impact on endangered species near the site.

BACT Analysis

BEST AVAILABLE CONTROL TECHNOLOGY ANALYSIS

Under Prevention of Significant Deterioration (PSD) rules contained ADEM Admin Code R. 335-3-14-.04, the Two Rivers Lumber facility must apply Best Available Control Technology (BACT) on each new or modified emissions unit for each pollutant that would emit in a significant new emissions increase. BACT is defined in ADEM Admin Code R. 335-3-14-.04(2)(l) as follows:

> "Best Available Control Technology (BACT)" shall mean an emissions limitation (including a visible emission standard) based on the maximum degree of reduction for each regulated NSR pollutant which would be emitted from any proposed major stationary source or major modification which the Director, on a case-by-case basis, taking into account energy, environmental, and economic impacts and other costs, determines is achievable for such source or modification through application of production processes or available methods, systems and techniques, including fuel cleaning or treatment or innovative fuel combustion techniques for control of such pollutant. In no event shall application of BACT result in emissions of any pollutant which would exceed the emissions allowed by any applicable standard under 40 CFR Parts 60 or 61. If the Director determines that technological or economic limitations on the application of measurement methodology to a particular emissions unit would make the imposition of an emissions standard infeasible, a design, equipment, work practice, operational standard, or combination thereof may be prescribed instead to satisfy the requirement for the application of BACT. Such standard shall, to the degree possible, set forth the emissions reduction achievable by implementation of such design, equipment, work practice, or operation and shall provide for compliance by means which achieve equivalent results.

A BACT analysis has been provided for each new or modified emissions emission unit for each pollutant exceeding an applicable PSD Significant Emission Rate, which is volatile organic compounds (VOC) for the proposed project addressed here.

BACT Methodology

In a memorandum dated December 1, 1987, the Environmental Protection Agency (EPA) stated its preference for a “top-down” approach to BACT analysis. After determining if any New Source Performance Standard (NSPS) is applicable, the first step in this approach is to determine, for the emission unit in question, the most stringent control available for a similar or identical source or source category. If it can be shown that this level of control is technically infeasible or have unacceptable energy, economic, and environmental impact for the unit in question, then the next most stringent level of control is determined and similarly evaluated. This process continues until the BACT level under consideration cannot be eliminated by any substantial or unique technical, environmental, or economic objection. Presented below are the five basic steps of a top-down BACT review as identified by the EPA.

Step 1 – Identify All Control Technologies

Available control technologies are identified for each emission unit in question. The following methods are used to identify a comprehensive list of potential technologies:

1. Researching the Reasonable Available Control Technology (RACT)/BACT/Lowest, Achievable Emission Rate (LAER) Clearinghouse (RBLC) database,
2. Surveying regulatory agencies,
3. Drawing from previous engineering experience,

4. Surveying air pollution control equipment vendors, and
5. Surveying available literature.

Step 2 – Eliminate Technically Infeasible Options

After the identification of control options, an analysis is conducted to eliminate technically infeasible options. A control option is eliminated from consideration if there are process-specific conditions that prohibit the implementation of the control technology or if the highest control efficiency of the option would result in an emission level that is higher than any applicable regulatory limits, such as NSPS.

Step 3 – Rank Remaining Control Technologies by Control Effectiveness

Once technically infeasible options are removed from consideration, the remaining options are ranked based on their control effectiveness (percent pollutant removed). If there is only one remaining option or if all of the remaining technologies could achieve equivalent control efficiencies, ranking based on control efficiency is not required.

Step 4 – Evaluate Most Effective Controls and Document Results

Beginning with the most efficient control option in the ranking, detailed economic, energy, and environmental impact evaluations are performed. If a control option is determined to be economically feasible without adverse energy or environmental impacts, it is not necessary to evaluate the remaining options with lower control efficiencies.

The economic evaluation centers on the cost effectiveness of the control option. Cost of installing and operating control technologies are estimated and annualized following the methodologies outlined in EPA's OAQPS Control Cost Manual (CCM) and other industry resources.

Step 5 – Select BACT

In the final step, one pollutant-specific control option is proposed as BACT for each emission unit under review based on evaluations from the previous step.

The EPA has consistently interpreted the statutory and regulatory BACT definitions as containing two core requirements that the agency believes must be met by any BACT determinations. First, the BACT analysis must include consideration of the most stringent available control technologies, i.e. those which provide the "maximum degree of emission reduction." Second, any decision to require a lesser degree of emission reduction must be justified by an objective analysis of "energy, environmental, and economic impacts."

The potential increase in VOC emissions resulting from the new Two Rivers Lumber facility will exceed the PSD significant emission rate. Therefore, VOC emissions from the new emitting sources (DPK-1, DPK-2, CE-1, and CE-2) are subject to a BACT analysis.

<u>Dual Path Kilns (DPK-1 and DPK-2)</u>

During the lumber drying process, organic compounds present in the wood will be released. These are organic compounds that are in gaseous form at the elevated temperature of the wood, and are comprised largely of lower molecular weight volatiles, and higher molecular weight resin and fatty acids. The type and amounts of compounds released will depend on several factors related to the drying process, including the kiln temperature, the surface area of the wood material relative to its

mass, initial moisture content, and the amount of moisture removed from the material as well as the wood species dried.

Step 1: The first of the five steps in the top-down BACT analysis procedure is to identify control technologies for each pollutant. The EPA RACT/BACT/LAER Clearinghouse (RBLC) was searched for lumber drying kilns (process type 30.8) permitted after January 1, 2006. The search was further refined to address only VOC for this analysis. The search of lumber drying kilns was then narrowed to match units similar to Two Rivers Lumber's kilns (i.e. direct fired kilns). The results of this search are included as RBLC results in Appendix D. The range of VOC limits based on throughput was between 1.69 lb/MBF and 4.5 lb/MBF. In cases where BACT was specified, it was determined to be proper maintenance & operations such as "work practice standards", "proper maintenance and operation", and "proper temperature and process management; drying to appropriate moisture content" with no additional/add-on control.

As the review of the RBLC did not reveal any facilities that have add on control for lumber drying kilns, a search was also completed of VOC control technologies for other processes that could possibly be applied to a lumber drying kiln. Control technologies evaluated are:

- Regenerative Thermal Oxidation
- Regenerative Catalytic Oxidation
- Carbon Adsorption
- Condensation
- Biofiltration
- Wet Scrubbing
- Proper Maintenance & Operation

Regenerative Thermal Oxidation: Regenerative Thermal Oxidizer (RTO) units use beds of ceramic pieces to recover and store heat. A VOC laden air stream passes through a heated ceramic bed before entering a combustion chamber. In the combustion chamber, the VOC-laden gas stream is heated by auxiliary fuel (natural gas) combustion to a final oxidation temperature typically between 1,400°F to 1,500°F and maintained at this temperature to achieve maximum VOC destruction. The exhaust gases from the combustion chamber are used to heat another ceramic bed. Periodically, the flow is reversed so the bed that was being heated is now used to preheat the VOC-laden gas stream. Usually, there are three or more beds that are continually cycled. Destruction efficiency of VOC depends upon the design criteria (i.e., chamber temperature, residence time, inlet VOC concentration, compound type, and degree of mixing). Typical VOC destructive efficiency ranges from 95 to 99% for RTO systems depending on system requirements and characteristics of the contaminated stream. Lower control efficiencies are generally associated with lower concentration flows.

Regenerative Catalytic Oxidation: Regenerative catalytic oxidizer (RCO) units function similar to an RTO, except that the heat recovery beds in RCO contain catalytic media. The catalyst accelerates the rate of VOC oxidation and allows for VOC destruction at lower temperatures than in an RTO, typically 600°F to 1,000°F, which reduces auxiliary fuel usage. Typical VOC destructive efficiency ranges from 90 to 99% for RCO systems. However, this also depends on system requirements and characteristics of the contaminated stream.

Carbon Adsorption: The core component of a carbon adsorption system is an activated carbon bed contained in a steel vessel. The VOC-laden gases pass through the carbon bed and the VOCs are adsorbed on the activated carbon. The cleaned gas is discharged to the atmosphere. The spent carbon is regenerated either at an onsite regeneration facility or by an off-site activated carbon supplier. Steam is used to replace adsorbed organic compounds at high temperatures to regenerate

the spent carbon. At proper operating conditions, carbon adsorption systems have demonstrated VOC reduction efficiencies of approximately 90 to 95%.

Condensation: Condensation removes vaporous contaminants from the gas stream by cooling it and converting the vapor into a liquid. In some instances, control of VOC can be satisfactorily achieved entirely by condensation. However, most applications require additional control methods. In such cases, the use of a condensation process reduces the concentration load on downstream control equipment. The two most common type of condensation devices are contact or barometric condensers and surface condensers.

Biofiltration: Biofiltration is an air pollution control technology in which off-gases containing biodegradable organic compounds are vented, under controlled temperature and humidity, through a special filter material containing microorganisms. As exhaust gases pass through the biofilter, VOC is absorbed on the filter material, and the microorganisms break down the compounds and transform them into CO_2 and H_2O with varying efficiency.

Wet Scrubbing: Scrubbing of gas or vapor pollutants from a gas stream is usually accomplished in a packed column (or other type of column) where pollutants are absorbed by counter-current flow of a scrubbing liquid. A VOC laden gas stream with relatively high water solubility is required in order for the wet scrubber to be effective.

Proper Maintenance and Operation: Proper maintenance and operation of lumber drying kilns can effectively reduce VOC emissions. Proper drying schedule and temperature should be selected based on moisture content and manufacturer's specifications. Routine maintenance should also be completed on kilns based on manufacturer's recommendations.

Step 2: The second of the five steps in the top-down BACT analysis procedure is to eliminate technically infeasible control technologies. The table below provides a summary of the feasibility of the control technologies identified in Step 1.

Pollutant	Control Technology	Feasibility
VOC	Regenerative Thermal Oxidation	Infeasible
	Regenerative Catalytic Oxidation	Infeasible
	Carbon Adsorption	Infeasible
	Condensation	Infeasible
	Biofiltration	Infeasible
	Wet Scrubbing	Infeasible
	Proper Maintenance and Operation	Feasible

While the emissions are fugitive in nature and collection is infeasible; the following sections provide brief explanations on the further infeasibility of the VOC control technologies for the proposed kilns.

Regenerative Thermal Oxidation: Due to the high moisture content and low exit temperature in the exhaust stream, RTO would be technically infeasible.

Regenerative Catalytic Oxidation: Although regenerative catalytic oxidizers can operate at a lower temperature than thermal oxidizers, the temperature of the exit stream from lumber drying kilns is still not high enough for optimal function of the catalytic oxidizer. Furthermore, loss of catalytic activity occurs due to fouling by particulate matter or suppression or poisoning from other contaminants in the waste gas stream. In order to effectively use catalytic oxidation, the contaminants must be removed from the waste gas stream. Removing these contaminants would

require additional control equipment which adds greatly to the cost of the system. Catalysts must periodically be replaced due to thermal aging, adding significantly to the cost of operating the unit in addition to creating solid waste. Catalytic oxidation has never been applied to a lumber drying kiln. Regenerative catalytic oxidation is not considered feasible for the proposed lumber drying kilns.

Carbon Adsorption: Carbon adsorption is not practical because of the high moisture content of the exhaust stream from the lumber drying kilns. At high moisture content, water molecules begin to compete with the hydrocarbon molecules for active adsorption sites. This reduces the capacity and the efficiency of the adsorption system. For the reason stated above and because there are currently no known lumber drying kilns that are equipped with carbon adsorption system, the use of carbon adsorption systems for the proposed lumber drying kilns is not considered technically feasible.

Condensation: Condensation is only effective when the gas stream can be cooled to a temperature where VOC constituents condense as a liquid out of the gas stream. To condense terpenes, the primary constituent of lumber kiln VOC emissions, the temperature would need to be reduced to -40°F. At this temperature, freezing of the water vapor would generate ice, causing unacceptable plugging of the unit. Condensation is not technically feasible for the proposed lumber drying kilns.

Biofiltration: The most important variable affecting bioreactor operations is temperature. Most microorganisms can survive and flourish in a temperature range of 60 to 105°F (30 to 41°C). The exiting exhaust temperature of the proposed lumber kilns is approximately 140 - 200°F. Furthermore, the VOC emissions from the kilns are primarily terpenes. Terpenes are highly viscous and would foul the biofilter. The application of biofiltration technology for VOC removal from lumber kiln emissions has not been demonstrated. Due to the temperature requirement, large footprint requirement for a biofiltration system, and the unproven application of biofiltration to this type of process, biofiltration is not technically feasible for the proposed lumber drying kilns.

Wet Scrubbing: The VOC emissions from the kilns are primarily terpenes. Terpenes are not highly soluble. Moreover, they are highly viscous and would foul the absorption media of a wet scrubber. Wet scrubbing is not technically feasible for the proposed lumber drying kilns.

Step 3: The only control technology considered technically feasible and identified in the RBLC is proper maintenance and operation; ranking is not necessary.

Step 4: Proper maintenance and operation is the only remaining technology/method for this application. A search of EPA RACT/BACT/LAER Clearinghouse indicated that no facilities are utilizing add-on controls for continuous dry kilns. No control technology is currently feasible for lumber drying kilns beyond proper maintenance and operation. The RBLC search shows other emission factors utilized in permitting emission limits of VOC; there is no information to determine that these factors can be routinely “achieved in practice”. The species of wood dried within a kiln has a distinct impact on the resulting VOC emissions.

Step 5: The fifth and final step in the top-down BACT analysis procedure is the selection of the BACT level of control for each pollutant. Per EPA guidance, BACT is the most effective control technology not eliminated by the previous four steps of the analysis. Proper maintenance and operation with a VOC emission rate of 3.8 lb/Mbf is the only remaining technology for the reduction of VOC emissions from lumber drying kilns and Two Rivers Lumber proposed it as BACT. The proposed BACT limit for VOC is interpreted as VOC as C. Additionally, since the VOC (WPP1) is a commonly expressed VOC measurement for sawmills, Two Rivers Lumber also presents the VOC (WPP1) emission rate calculated to be 4.74 lb/Mbf as an alternative BACT limit.

WPP1 VOC is an acronym for Wood Products Protocol 1 VOC from the EPA document, "Interim VOC Measurement Protocol for the Wood Products Industry – July 2007." WPP1 VOC is calculated using the following equation: [VOC as C x 1.225 + (1-0.65) x Methanol + Formaldehyde].

Condensate Evaporators (CE-1 and CE-2)

A natural gas fired kiln condensate evaporator for each kiln is proposed for Two Rivers Lumber to prevent process water from discharging to waters of the state in accordance with the general stormwater permit. The condensate is evaporated in tanks heated by natural gas burners. Combustion of natural gas in the units and evaporation of the kiln condensate will result in emissions of VOC. The natural gas combustion exhaust is dissipated into the condensate for heat recycling.

Step 1: The first of the five steps in the top-down BACT analysis procedure is to identify control technologies for each pollutant. An EPA RACT/BACT/LAER Clearinghouse (RBLC) search was completed for evaporator and water heater processes. The RBLC was searched for the keyword "evaporator" as well as "Other Organic Evaporative Loss Sources" (process type 49.999), "Misc. Boilers, Furnaces, Heaters" (process type 19.6), and "Commercial/Institutional natural gas boilers/furnaces < 100 MMBtu/hr" (process type 13.31). The search covered processes permitted after January 1, 2006. The search was further refined to address only the applicable pollutants for this analysis. The results of this search are included as RBLC results in Appendix D.

The evaporators listed in the RBLC database are enclosed chemical recovery process evaporators. Due the specific nature of the emission profile from enclosed chemical recovery process evaporators, the RBLC listed evaporators do not directly relate to the kiln condensate evaporation process at Two Rivers Lumber. Additionally, there were no processes listed under "Other Organic Evaporative Loss Sources" (process type 49.999) that related to any evaporation process. The natural gas heaters units and boilers listed in the RBLC indicate either no control or good design and/or combustions practices for VOC control with the exception of a reboiler, a Transmix Processing Unit with gas-fired process heaters, and a group of carbottom furnaces that all required thermal oxidation control. However, the thermal oxidation control for these processes were found to be BACT for process material vented VOC emissions that does not relate to the high moisture laden exhaust gas at Two Rivers Lumber.

As the review of the RBLC did not reveal any facilities that have add on control for kiln condensate evaporation, a search was also completed of VOC control technologies for other processes that could possibly be applied to a kiln condensate evaporator process. Control technologies evaluated are:

- Regenerative Thermal Oxidation
- Regenerative Catalytic Oxidation
- Carbon Adsorption
- Condensation
- Biofiltration
- Wet Scrubbing
- Proper Maintenance & Operation

These control technologies have been described in Step 1 of the Dual Path Kiln BACT analysis above.

Step 2: The second of the five steps in the top-down BACT analysis procedure is to eliminate technically infeasible control technologies. The table below provides a summary of the feasibility of the control technologies identified in Step 1.

Pollutant	Control Technology	Evaporator Control Feasibility
VOC	Regenerative Thermal Oxidation	Infeasible
	Regenerative Catalytic Oxidation	Infeasible
	Carbon Adsorption	Infeasible
	Condensation	Infeasible
	Biofiltration	Infeasible
	Wet Scrubbing	Infeasible
	Proper Maintenance and Operation	Feasible

While the emissions from evaporators are fugitive in nature; the following sections provide brief explanations on the further infeasibility of the VOC control technologies for the proposed kiln condensate evaporators.

Regenerative Thermal Oxidation: Due to the low VOC concentration, high moisture content, and low exhaust flow and exit temperature in the exhaust stream, a Regenerative Thermal Oxidation (RTO) control device could not operate efficiently. Additionally, the RTO burns natural gas to heat the gas in the heating chamber which would cause additional pollutants to be emitted that are not destroyed as well as an additional natural gas demand. Due to characteristically inefficient RTO operation of evaporator process exhaust and added pollutant emissions from additional natural gas combustion, an RTO would be technically infeasible for the kiln condensate evaporators.

Regenerative Catalytic Oxidation: The high moisture content of the gas stream is too high for the catalytic oxidizer to function properly and would cause deactivation of the catalyst reducing efficiency. Additionally, the exhaust stream from the evaporators has a low VOC concentration and to capture the gas stream to route to a Regenerative Catalytic Oxidation (RCO), the majority of the gas stream would be ambient air, further reducing the RCO control efficiency. Due to characteristically inefficient RCO operation of evaporator process exhaust, an RCO would be technically infeasible for the kiln condensate evaporators.

Carbon Adsorption: Carbon adsorption is not practical because of the high moisture content and low VOC content of the exhaust stream from the kiln condensate evaporators. At high moisture content, water molecules begin to compete with the hydrocarbon molecules for active adsorption sites. This reduces the capacity and the efficiency of the adsorption system. Additionally, the exhaust stream from the evaporators has a low VOC concentration and to capture the gas stream to route to a carbon adsorption system, the majority of the gas stream would be ambient air, further reducing the control efficiency. For the reason stated above and because there are currently no known kiln condensate evaporators that are equipped with carbon adsorption system, the use of carbon adsorption systems for the proposed kiln condensate evaporators is not considered technically feasible.

Condensation: Condensation is only effective when the gas stream can be cooled to a temperature where the VOC constituents condense as a liquid out of the gas stream. Condensation control for an evaporation process fundamentally changes the design and purpose of the evaporator and is not technically feasible for the proposed evaporator. Condensation is not technically feasible for the proposed kiln condensate evaporators.

Biofiltration: The exhaust stream from the evaporators has a low VOC concentration and to capture the gas stream to route to a biofiltration system, the majority of the gas stream would be ambient

air, further reducing the biofilter control efficiency. Therefore, the microorganisms would require a much longer retention time/size of a unit in order to provide a reasonable control efficiency, thus requiring a large footprint requirement for the biofiltration system. For the reason stated above and because there are currently no known kiln condensate evaporators that are equipped with a biofiltration system, the use of biofiltration for the proposed kiln condensate evaporators is not considered technically feasible.

Wet Scrubbing: The gas stream from the kiln condensate evaporators will contain a low VOC concentration. Additionally, to capture the gas stream to route to a wet scrubbing system, the majority of the gas stream would be ambient air, further reducing the control efficiency. The low VOC concentration would require much longer residence time within a scrubber packed column and with a low flow, this control would be inefficient and would condense the evaporate which would eliminate this as a technically viable solution as VOC control for the kiln condensate evaporators.

Step 3: The only control technology considered technically feasible and identified in the RBLC for the kiln condensate evaporators is proper maintenance and operation; ranking is not necessary.

Step 4: Proper maintenance and operation is the only remaining technology/method for this application. No control technology is currently feasible for the kiln condensate evaporators beyond proper maintenance and operation. The kiln condensate VOC concentration is insignificant and industry specific factors are not applicable to evaporators for terpenes. The RBLC search shows several natural gas combustion emission factors utilized in permitting emission limits of VOC from natural gas burners that are less than the natural gas combustion AP-42 factor used to estimate natural gas combustion emissions from the evaporators. However, these emission factors are within the rounded value for the AP-42 emission factor proposed and are likely due to rounding of the same AP-42 emission factor.

Step 5: The fifth and final step in the top-down BACT analysis procedure is the selection of the BACT level of control for each pollutant. Per EPA guidance, BACT is the most effective control technology not eliminated by the previous four steps of the analysis. Proper maintenance and operation is the only remaining technology for the reduction of VOC emissions from the kiln condensate evaporators and Two Rivers Lumber proposed it as BACT.

The VOC emission factor for the evaporate was based on the maximum VOC concentration (72.1 mg/m3) in condensate from a peer reviewed analytical report of kiln condensate from pine lumber (see Appendix A7). Based on the low volume of condensate produced of 9.3 gallons per minute and the low VOC concentration in the condensate of 72 mg/m^3, there are negligible levels of VOC emissions that occur from the evaporated kiln condensate. Therefore, the proposed VOC emission factor for each evaporator process is based on the natural gas combustion of 5.5 lb/MMscf, derived from AP42 Table 1.4-2 (7/98) (Appendix A6).

Fugitive Emission Control Analysis

FUGITIVE EMISSION CONTROL ANALYSIS

Two Rivers Lumber LLC proposes the following requirements to minimize fugitive emissions at the facility:

1) The sawdust and bark particles generated from sawmill operations are relatively large and not respirable. Because of their large size, sawdust particles also tend to settle out of the air quickly. Therefore, partially enclosed buildings are considered to be an industry standard control to drop out particulates emitted from the process equipment. All proposed sawmill process equipment at the facility including the Log Debarker (LD-1), Log Bucking (LB-1), Bark Hog (BH-1), Sawmill Chipper (SC-1), and the Sawmill (SM-1) shall be located in at least partially enclosed buildings (at least 3 sided enclosure). The log debarker equipment (LD-1) will be located in a fully enclosed building (4 walls with openings for product inlet/outlet transfer) and is assumed to not emit any fugitive emissions in accordance with the sawmill guidance document from the Texas Commission of Environmental Quality (TCEQ). All units generating only fugitive emissions at the facility have been grouped for permitting as one process in this application.

2) The Planer Mill process equipment shall be under negative pressure and the emissions and shavings from the Planer Mill are conveyed using a pneumatic collection system to the high efficiency process conveyance cyclofilter (PM-1). Therefore, there are no fugitive emissions associated with the planer mill equipment assumed. The large shaving particles are dropped out and mechanically conveyed to the Shaving Storage Bin (SSB-1), which could generate fugitive emissions and thus are included in the sawmill fugitive source group.

3) All sawmill secondary product storage piles (CSB-1, BSB-1, SDSB-1, and SSB-1) shall be stored in bins and any overflow storage piles shall be minimized, watered, and removed as necessary to minimize fugitive particulate emissions.

4) All sawdust, bark, and chips produced at the facility shall be conveyed by covered belts or drag chains to the storage bins (CSB-1, BSB-1, SDSB-1, SSB-1) to minimize fugitive particulate emissions.

Process Description

PROCESS DESCRIPTION

The Two Rivers Lumber sawmill will be capable of producing 200 million board feet (MMBF) of kiln dried lumber per year.

Debarker (LD-1), Log Bucking (LB-1), Bark Hog (BH-1), Sawmill (SM-1), Sawmill Chipper (SC-1)

Incoming logs are typically stored on-site prior to processing. Logs are debarked and then cut to length within the log bucking process before being routed through the sawmill. Bark from the debarker is routed to the bark hog. Trim from the sawmill is routed to the sawmill chipper. The end product of this process is rough, green dimensional lumber. By-products from this operation include bark, chips, and sawdust.

Dual Path Kilns (DPK-1, DPK-2), Condensate Evaporators (CE-1, CE-2)

The rough, green lumber is sorted and stacked before being dried in a continuous lumber drying kiln. Two kilns, direct-fired with natural gas, are proposed at the facility. After drying, the rough lumber is processed in the planer mill or shipped off-site. The condensate from each kiln is routed to its respective natural gas fired condensate evaporator to eliminate any condensate discharge from the facility.

Planer Mill (PM-1)

The rough, dry lumber is finished in the planer mill. Planer shavings and planer hog trim are pneumatically conveyed onto a conveyer and mechanically routed to the shavings storage bin. A cyclofilter is used for particulate control of the pneumatically conveyed shavings.

Material Storage (BSB-1, CSB-1, SDSB-1, SSB-1)

Byproducts, to include bark, chips, sawdust, and shavings, are mechanically conveyed to storage bins then loaded into vehicles to transport off site.

Emissions are estimated for all units that require permitting in the Emission Calculation section of the application. The following processes are Section 2 Trivial and Insignificant Activities in accordance with ADEM's list dated September 23, 2009: LD-1, BH-1, LB-1, and SC-1. As these Insignificant Activities are not subject to a NSPS, NESHAP, or MACT, no emissions are required to be calculated.

Process Flow Diagram

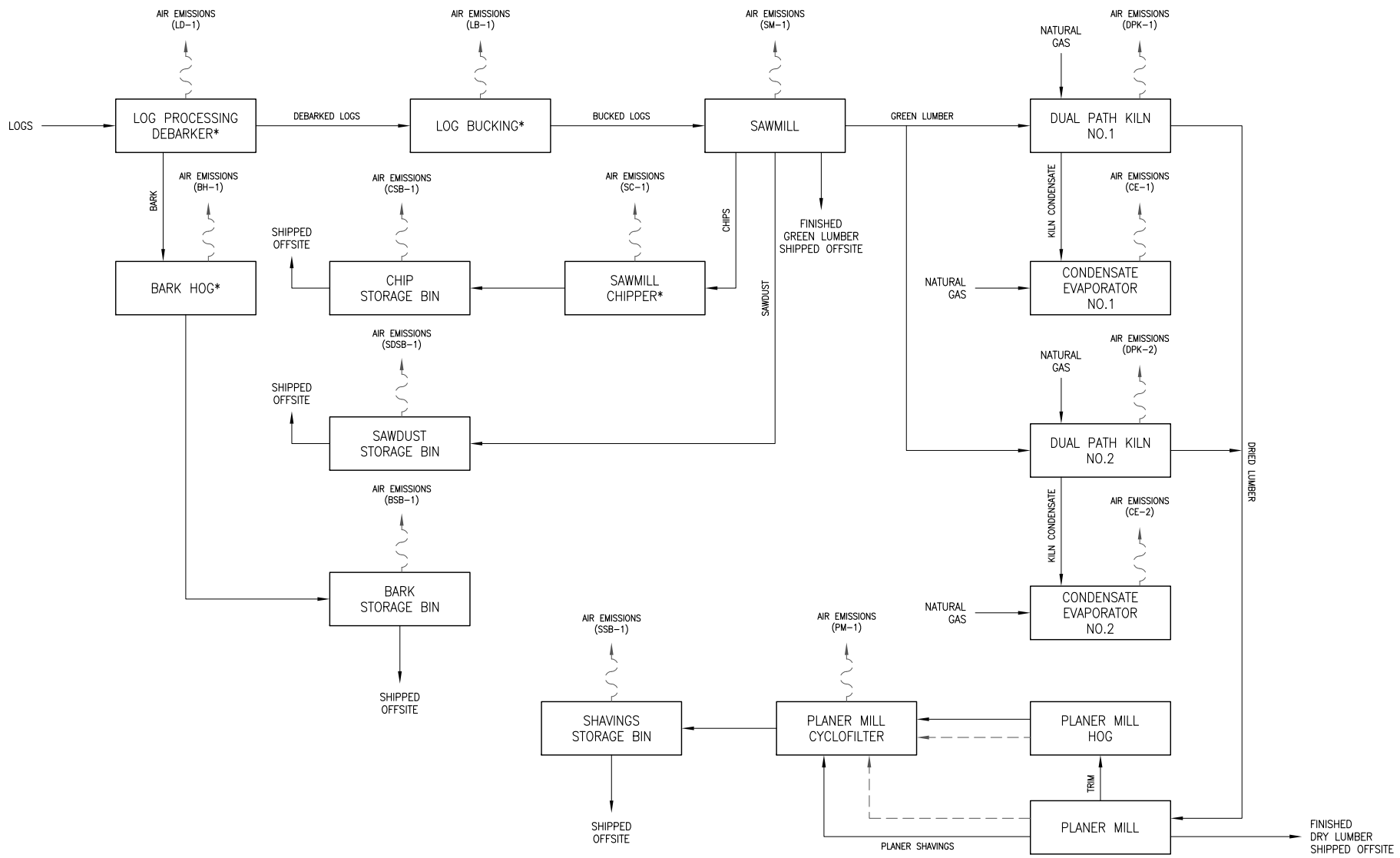

LEGEND

- MATERIAL/LIQUID
- AIR EMISSIONS
- * QUALIFIES AS SECTION 2 INSIGNIFICANT ACTIVITIES, 23 SEP 09

2950.100.G1

PROCESS FLOW DIAGRAM

TWO RIVERS LUMBER CO., LLC
DEMOPOLIS, ALABAMA

Approved by:	CWR	GBMc STRATEGIC ENVIRONMENTAL SERVICES 219 Brown Lane Bryant, AR 72022	Project No.:	2950-16-030
Checked by:	CWR		Date:	09/15/2016
Drawn by:	IT		Scale:	---

Plot Plan

EMISSION POINT PROCESS DESCRIPTION	ID
Log Processing Debarker*	LD–1
Log Buckling*	LB–1
Sawmill	SM–1
Dual Path Kiln No.1	DPK–1
Dual Path Kiln No.2	DPK–2
Condensate Evaporator No.1	CE–1
Condensate Evaporator No.2	CE–2
Planer Mill	PM–1
Bark Hog*	BH–1
Sawmill Chipper*	SC–1
Chip Storage Bin	CSB–1
Bark Storage Bin	BSB–1
Sawdust Storage Bin	SDSB–1
Shavings Storage Bin	SSB–1

* Qualifies as Section 2
Insignificant Activities, 23 Sep 09

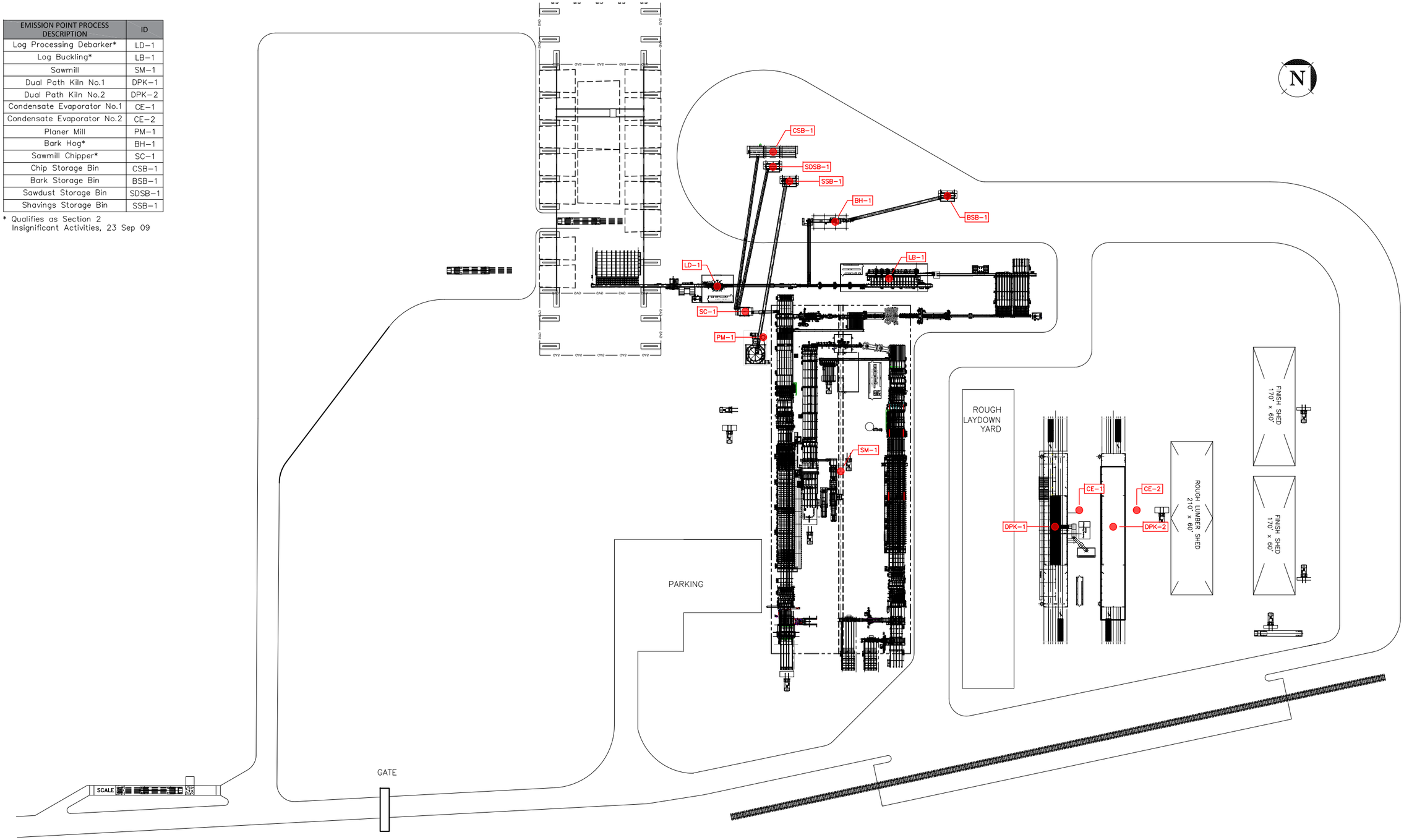

NO	DATE	REVISION	BY	CK.	APPR.

DESIGNED BY CWR
CHECKED BY CWR
APPR. BY CWR
DRAWN BY IT

GBMc
Strategic Environmental Services
219 Brown Lane
Bryant, Arkansas 72022

SHEET TITLE: DRAFT PLOT PLAN

JOB NAME: TWO RIVERS LUMBER CO., LLC DEMOPOLIS, ALABAMA

PROJECT NO. 2950–16–030
DATE 09/15/2016
SCALE NTS
REV. NO.
DWG. NO.

Area Map

N
W E
S

0.5
Miles

Approx. Boundary
Streams

2950.000.G1

AREA MAP

TWO RIVERS LUMBER CO., LLC
DEMOPOLIS, ALABAMA

Approved by:	CWR	GBMc STRATEGIC ENVIRONMENTAL SERVICES 219 Brown Lane Bryant, Arkansas 72022	Project No.:	2950-16-030
Checked by:	CWR		Date:	09/07/2016
Drawn by:	IT		Scale:	SHOWN

ADEM Required Forms

ADEM 103: Facility Identification Form

ALABAMA DEPARTMENT OF ENVIRONMENTAL MANAGEMENT (AIR DIVISION)

Do not Write in This Space

Facility Number [ ][ ][ ] - [ ][ ][ ][ ]

CONSTRUCTION/OPERATING PERMIT APPLICATION
FACILITY IDENTIFICATION FORM

1. Name of Facility, Firm, or Institution: Two Rivers Lumber Co., LLC

Facility Physical Location Address

Street & Number: Industrial Park Road

City: Demopolis **County:** Marengo **Zip:** 36732

Facility Mailing Address (If different from above)

Address or PO Box: PO Box 104

City: Cuba **State:** Alabama **Zip:** 36907

Owner's Business Mailing Address

2. Owner: McElroy Truck Lines, Jay McElroy

Street & Number: PO Box 104 **City:** Cuba

State: Alabama **Zip:** 36907 **Telephone:** 205-392-5579

Responsible Official's Business Mailing Address

3. Responsible Official: Jay McElroy **Title:** President

Street & Number: PO Box 104

City: Cuba **State:** Alabama **Zip:** 36907

Telephone Number: 205-392-5579 ext. 125 **E-mail Address:** jay@mcelroytrucklines.com

Plant Contact Information

4. Plant Contact: Jay McElroy **Title:** President

Telephone Number: 205-392-5579 ext. 125 **E-mail Address:** jay@mcelroytrucklines.com

5. Location Coordinates:

UTM 409956 E **E-W** 3592041 N **N-S**

Latitude/Longitude 32.461911° **LAT** -87.958112° **LONG**

ADEM Form 103 01/10 m5

6. **Permit application is made for:**

- ☐ **Existing source (initial application)**
- ☐ **Modification**
- ☑ **New source (to be constructed)**
- ☐ **Change of ownership**
- ☐ **Change of location**
- ☐ **Other (specify)** _____

Existing source (permit renewal)

If application is being made to construct or modify, please provide the name and address of installer or contractor

BID Group of Companies is the contractor/installer. Brian Fehr, Chairman & Managing Director

Email: Brian.Fehr@bidgroup.ca Address: BID Group Construction US Inc., 5154 Hwy 78, St Georges, SC, 29477

Telephone 250.567.8657

Date construction/modification to begin January 10, 2017 **to be completed** September 20, 2017

7. **Permit application is being made to obtain the following type permit:**

- ☑ **Air permit**
- ☐ **Major source operating permit**
- ☐ **Synthetic minor source operating permit**
- ☐ **General permit**

8. **Indicate the number of each of the following forms attached and made a part of this application: (if a form does not apply to your operation indicate "N/A" in the space opposite the form). Multiple forms may be used as required.**

N/A- 1	**ADEM 104 - INDIRECT HEATING EQUIPMENT**
4	**ADEM 105 - MANUFACTURING OR PROCESSING OPERATION**
N/A- 1	**ADEM 106 - REFUSE HANDLING, DISPOSAL, AND INCINERATION**
N/A	**ADEM 107 - STATIONARY INTERNAL COMBUSTION ENGINES**
N/A	**ADEM 108 - LOADING, STORAGE & DISPENSING LIQUID & GASEOUS ORGANIC COMPOUNDS**
N/A	**ADEM 109 - VOLATILE ORGANIC COMPOUND SURFACE COATING EMISSION SOURCES**
1	**ADEM 110 - AIR POLLUTION CONTROL DEVICE**
N/A	**ADEM 112 - SOLVENT METAL CLEANING**
N/A	**ADEM 438 - CONTINUOUS EMISSION MONITORS**
N/A-1	**ADEM 437 - COMPLIANCE SCHEDULE**

9. **General nature of business: (describe and list appropriate standard industrial classification (SIC) and North American Industry Classification System (NAICS) (www.naics.com) code(s)):**

The facility will install and operate a softwood sawmill to produce dimensional lumber; NAICS 321113 - Sawmills and SIC 2421 - Sawmills and Planing Mills, General. The mill will consist of a sawmill, two natural gas fired continuous lumber drying kilns, a planer mill, and ancillary support equipment.

10. **For those making application for a synthetic minor or major source operating permit, please summarize each pollutant emitted and the emission rate for the pollutant. Indicate those pollutants for which the facility is major.**

Regulated pollutant	Potential Emissions* (tons/year)	Major source? yes/no
PM**	361.85**	Yes**
PM10	46.85	No
PM2.5	26.66	No
SO2	0.22	No
VOC as C	512.99	Yes
CO	31.0	No
NOX	20.40	No
Total HAPs (see emission summary section for speciated HAPs)	39.8	Yes
Methanol (included in Total HAPs)	26.9	Yes
Lead (included in Total HAPs)	0.0002	No
Requested PM limit for all sources**	74.26	No
VOC as WPP1	640.0	Yes
**PM is indicated as major per emissions allowed by Alabama regulation;		
the facility is requesting a PM limit to avoid being major for this pollutant.		
NOTE: See the emission calculation section for non-fugitive emission totals		

***Potential emissions are either the maximum allowed by the regulations or by permit, or, if there is no regulatory limit, it is the emissions that occur from continuous operation at maximum capacity.**

11. **For those applying for a major source operating permit, indicate the compliance status by program for each emission unit or source and the method used to determine compliance. Also cite the specific applicable requirement.**

Emission unit or source: Sawmill fugitive sources

(description)

Emission Point No.	Pollutant[4]	Standard	Program[1]	Method used to determine compliance	Compliance Status	
					IN[2]	OUT[3]
SM-1	PM	ADEM Code 335-3-4-.04(5)	SIP Regulation	Raw Log Production Recordkeeping	Proposed*	N/A
LD-1	PM	ADEM Code 335-3-4-.04(5)	SIP Regulation	Raw Log Production Recordkeeping	Proposed*	N/A
LB-1	PM	ADEM Code 335-3-4-.04(5)	SIP Regulation	Raw Log Production Recordkeeping	Proposed*	N/A
BH-1	PM	ADEM Code 335-3-4-.04(5)	SIP Regulation	Raw Log Production Recordkeeping	Proposed*	N/A
SC-1	PM	ADEM Code 335-3-4-.04(5)	SIP Regulation	Raw Log Production Recordkeeping	Proposed*	N/A
CSB-1	PM	ADEM Code 335-3-4-.04(5)	SIP Regulation	Raw Log Production Recordkeeping	Proposed*	N/A
SDSB-1	PM	ADEM Code 335-3-4-.04(5)	SIP Regulation	Raw Log Production Recordkeeping	Proposed*	N/A
BSB-1	PM	ADEM Code 335-3-4-.04(5)	SIP Regulation	Raw Log Production Recordkeeping	Proposed*	N/A
SSB-1	PM	ADEM Code 335-3-4-.04(5)	SIP Regulation	Raw Log Production Recordkeeping	Proposed*	N/A

[1]**PSD, non-attainment NSR, NSPS, NESHAP (40 CFR Part 61), NESHAP (40 CFR Part 63), accidental release (112(r)),SIP regulation, Title IV, Enhanced Monitoring, Title VI, Other (specify)**

[2]**Attach compliance plan**

[3]**Attach compliance schedule (ADEM Form-437)**

[4]**Fugitive emissions must be included as separate entries**

* See Proposed Monitoring and Recordkeeping Section

11. **For those applying for a major source operating permit, indicate the compliance status by program for each emission unit or source and the method used to determine compliance. Also cite the specific applicable requirement.**

Emission unit or source: Planer Mill

(description)

Emission Point No.	Pollutant[4]	Standard	Program[1]	Method used to determine compliance	Compliance Status	
					IN[2]	OUT[3]
PM-1	PM	ADEM Code 335-3-4-.04(5)	SIP Regulation	Finished Lumber Production Recordkeeping	Proposed*	N/A

[1]**PSD, non-attainment NSR, NSPS, NESHAP (40 CFR Part 61), NESHAP (40 CFR Part 63), accidental release (112(r)),SIP regulation, Title IV, Enhanced Monitoring, Title VI, Other (specify)**

[2]**Attach compliance plan**

[3]**Attach compliance schedule (ADEM Form-437)**

[4]**Fugitive emissions must be included as separate entries**

* See Proposed Monitoring and Recordkeeping Section

11. **For those applying for a major source operating permit, indicate the compliance status by program for each emission unit or source and the method used to determine compliance. Also cite the specific applicable requirement.**

Emission unit or source: Dual Path Kiln #1 and Kiln Condensate Evaporator #1 (combustion equipment)

(description)

Emission Point No.	Pollutant[4]	Standard	Program[1]	Method used to determine compliance	Compliance Status	
					IN[2]	OUT[3]
DPK-1/CE-1	VOC	40 CFR Part 52	PSD	Production Recordkeeping**, Operation/Maint. Plan	Proposed*	N/A
DPK-1/CE-1	PM	ADEM Code 335-3-4-.03(4)	SIP Regulation	Production Recordkeeping**	Proposed*	N/A
DPK-1/CE-1	HAP	40 CFR Part 63 Sub DDDD	NESHAP - PWCP MACT	Notification; Completed by Permit Application	Yes	N/A

[1]PSD, non-attainment NSR, NSPS, NESHAP (40 CFR Part 61), NESHAP (40 CFR Part 63), accidental release (112(r)),SIP regulation, Title IV, Enhanced Monitoring, Title VI, Other (specify)

[2]Attach compliance plan

[3]Attach compliance schedule (ADEM Form-437)

[4]Fugitive emissions must be included as separate entries

* See Proposed Monitoring and Recordkeeping Section
** Facility Total Dried Lumber Production Recordkeeping

11. **For those applying for a major source operating permit, indicate the compliance status by program for each emission unit or source and the method used to determine compliance. Also cite the specific applicable requirement.**

Emission unit or source: Dual Path Kiln #2 and Kiln Condensate Evaporator #2 (combustion equipment)

(description)

Emission Point No.	Pollutant[4]	Standard	Program[1]	Method used to determine compliance	Compliance Status	
					IN[2]	OUT[3]
DPK-2/CE-2	VOC	40 CFR Part 52	PSD	Production Recordkeeping**, Operation/Maint. Plan	Proposed*	N/A
DPK-2/CE-2	PM	ADEM Code 335-3-4-.03(4)	SIP Regulation	Production Recordkeeping**	Proposed*	N/A
DPK-2/CE-2	HAP	40 CFR Part 63 Sub DDDD	NESHAP - PWCP MACT	Notification; Completed by Permit Application	Yes	N/A

[1]**PSD, non-attainment NSR, NSPS, NESHAP (40 CFR Part 61), NESHAP (40 CFR Part 63), accidental release (112(r)),SIP regulation, Title IV, Enhanced Monitoring, Title VI, Other (specify)**

[2]**Attach compliance plan**

[3]**Attach compliance schedule (ADEM Form-437)**

[4]**Fugitive emissions must be included as separate entries**

* See Proposed Monitoring and Recordkeeping Section

** Facility Total Dried Lumber Production Recordkeeping

12. **List all insignificant activities and the basis for listing them as such (i.e., less than the insignificant activity thresholds or on the list of insignificant activities). Attach any documentation needed, such as calculations. No unit subject to an NSPS, NESHAP or MACT standard can be listed as insignificant.**

Insignificant Activity	Basis
Log Process Debarking (LD-1)	Unit qualifies as Section 2 Trivial & Insignificant Activity
Log Bucking (LB-1)	Unit qualifies as Section 2 Trivial & Insignificant Activity
Bark Hog (BH-1)	Unit qualifies as Section 2 Trivial & Insignificant Activity
Sawmill Chipper (SC-1)	Unit qualifies as Section 2 Trivial & Insignificant Activity

13. List and explain any exemptions from applicable requirements the facility is claiming:

a. No exemptions requested, however, more stringent industry-specific PM limits are requested in lieu of PWR limits to avoid PSD

b. review for PM. See the PSD Applicability section for more details.

c.

d.

e.

f.

g.

h.

i.

14. List below other attachments that are a part of this application(all supporting engineering calculations must be appended):

a. Application Summary

b. PSD Analysis

c. BACT Analysis and Attachments

d. Process Description

e. Process Flow Diagram

f. Site Maps (plot plan and area map)

g. ADEM Required Forms (Forms: 103, 104, 105, 106, 110, 437, 445)

h. Emission Summary, Calculations, Proposed Monitoring and Recordkeeping

i. Appendices

I CERTIFY UNDER PENALTY OF LAW THAT, BASED ON INFORMATION AND BELIEF FORMED AFTER REASONABLE INQUIRY, THE STATEMENTS AND INFORMATION CONTAINED IN THIS APPLICATION ARE TRUE, ACCURATE AND COMPLETE.

I ALSO CERTIFY THAT THE SOURCE WILL CONTINUE TO COMPLY WITH APPLICABLE REQUIREMENTS FOR WHICH IT IS IN COMPLIANCE, AND THAT THE SOURCE WILL, IN A TIMELY MANNER, MEET ALL APPLICABLE REQUIREMENTS THAT WILL BECOME EFFECTIVE DURING THE PERMIT TERM AND SUBMIT A DETAILED SCHEDULE, IF NEEDED FOR MEETING THE REQUIREMENTS.

J. McElroy	President	10/17/2016
SIGNATURE OF RESPONSIBLE OFFICIAL	**TITLE**	**DATE**

ADEM Form 103 01/10 m5

ADEM 105: Process Information for Sawmill Fugitive Sources

PERMIT APPLICATION
FOR
MANUFACTURING OR PROCESSING OPERATION

[ ][ ][ ] - [ ][ ][ ][ ] - [ ][ ][ ][ ]
Do not write in this space

1. **Name of firm or organization:** Two Rivers Lumber Company, LLC

2. **Briefly describe the operation of this unit or process in your facility: (separate forms are to be submitted for each type of process or for multiple units of one process type. If the unit or process receives input material from, or provides input material to, another operation, please indicate the relationship between the operations.) An application should be completed for each alternative operating scenario.**

Operating scenario number 1

The log process debarker removes bark from the logs before processing in the sawmill. Removed bark is conveyed to the bark hog before being mechanically conveyed to the bark storage bin (BSB-1) for storage before shipping off-site. Debarked logs are then sent to the log bucking saws to cut logs into the desired lengths before being routed to the sawmill (SM-1) to be cut into the desired lumber dimensions. The rough cut lumber is either shipped off-site or routed to the kilns (DPK-1, DPK-2) for drying. The rough, dry lumber from kilns is finished in the planer mill. Planer shavings and hog trim are pneumatically conveyed from the planer mill to a cyclofilter (PM-1) for particulate control. The The larger particulates are dropped onto a conveyer and mechanically routed to the shavings storage bin (SSB-1) before being shipped offsite. Sawmill rejects are routo the sawmill chipper (SC-1) for processing into chips which are conveyed to the chip storage bin (CSB-1) before being shipped off-site. Sawdust from the sawmill is conveyed from the sawmill to the sawdust storage bin (SDSB-1) before being shipped off-site.

3. **Type of unit or process (e.g., calcining kiln, cupola furnace):** Sawmill Fugitives (i.e. Log Debarker, Log Bucking, Bark Hog, Sawmill, Sawmill Chipper, Shavings Storage Bin, Bark Storage Bin, Chip Storage Bin, Sawdust Storage Bin)

Make: NA **Model:** NA

Rated process capacity (manufacturer's or designer's guaranteed maximum) in pounds/hour: 720,000

Manufactured date: TBD **Proposed installation date:** 1/10/2017

Original installation date (if existing): NA

Reconstruction or Modification date (if applicable): NA

4. **Normal operating schedule:**

Hours per day: 24 **Days per week:** 7 **Weeks per year:** 52

Peak production season (if any): NA

5. **Materials (feed input) used in unit or process (include solid fuel materials used, if any):**

Material	Process Rate Average (lb/hr)	Maximum (lb/hr)	Quantity tons/year
Raw logs		720,000	3,153,600

6. **Total heat input capacity of process heating equipment (exclude fuel used by indirect heating equipment previously described on Form ADEM-104):_____MMBtu/hr**

Fuel	Heat Content	Units	Max. % Sulfur	Max. % Ash	Grade No. [fuel oil only]	Supplier [used oil only]
Coal		Btu/lb				
Fuel Oil		Btu/gal				
Natural Gas		Btu/ft^3				
L. P. Gas		Btu/ft^3				
Wood		Btu/lb				
Other (specify)						

7. **Products of process or unit:**

Products	Quantity/year	Units of production
Green Dimensional Lumber	1,576,800	ton/yr
Chips	1,051,200	ton/yr
Bark	315,360	ton/yr
Shavings	48,565	ton/yr
Sawdust	210,240	ton/yr

8. **For each regulated pollutant, describe any limitations on source operation which affects emissions or any work practice standard (attach additional page if necessary):** It is requested that the particulate matter (PM) emission limitations for this source be based on industry specific emission factors provided in this application in lieu of using the ADEM general industry process weight rule (PWR) to derive PM emissions. Throughput of raw logs into the facility will be recorded to demonstrate compliance with the sawmill fugitive emission rates based on the throughput rate of 3,153,600 raw logs/yr. The design throughput of the kilns, not to exceed 270 MMBf/year in total, demonstrates compliance with the emission estimates from the planer mill and associated shavings production.

9. **Is there any emission control equipment on this emission source?**

☐ Yes ☑ No **(Where a control device exists, Form ADEM-110 must be completed and attached).**

10. **Air contaminant emission points: (Each point of emission should be listed separately and numbered so that it can be located on the attached flow diagram):**

Emission Point	Height Above Grade (Feet)	Base Elevation (Feet)	Stack Diameter (Feet)	Stack Gas Exit Velocity (Feet/Sec)	Volume of Gas Discharged (ACFM)	Exit Temperature (°F)
BH-1	Ground Level	112	Fugitive - N/A	Fugitive - N/A	Fugitive - N/A	Ambient
LB-1	Ground Level	112	Fugitive - N/A	Fugitive - N/A	Fugitive - N/A	Ambient
LD-1	Ground Level	112	Fugitive - N/A	Fugitive - N/A	Fugitive - N/A	Ambient
SM-1	Ground Level	112	Fugitive - N/A	Fugitive - N/A	Fugitive - N/A	Ambient
SC-1	Ground Level	112	Fugitive - N/A	Fugitive - N/A	Fugitive - N/A	Ambient
SSB-1	15	112	Fugitive - N/A	Fugitive - N/A	Fugitive - N/A	Ambient
BSB-1	15	112	Fugitive - N/A	Fugitive - N/A	Fugitive - N/A	Ambient
CSB-1	15	112	Fugitive - N/A	Fugitive - N/A	Fugitive - N/A	Ambient
SDSB-1	15	112	Fugitive - N/A	Fugitive - N/A	Fugitive - N/A	Ambient

*** Std temperature is 68°F - Std pressure is 29.92" in Hg.**

11. **Air contaminants emitted: Basis of estimate (material balance, stack test, emission factor, etc.) must be clearly indicated on calculations appended to this form. Fugitive emissions must be included and calculations must be appended.**

Emission Point	Pollutants	Potential Emissions (lb/hr)	Potential Emissions (Tons/yr)	Potential Emissions Basis of Calculation	Regulatory Emission Limit (lb/hr)	Regulatory Emission Limit (units of standard)
BH-1	PM	0.04	0.20	TCEQ Wood Industry Factor	15.22 lb/hr for bark handling processes	E = 3.59P^0.62 ADEM 335-3-4-.03-4
BH-1	PM10	0.02	0.09	TCEQ Wood Industry Factor	NA	
BH-1	PM2.5	0.01	0.04	TCEQ Wood Industry Factor, PM2.5 assumed 50% of PM10	NA	
LB-1	PM	1.26	5.60	EPA Region 10 Sawmill Memo Factor	31.37 lb/hr for sawdust and chip processes	E = 3.59P^0.62 ADEM 335-3-4-.03-4
LB-1	PM10	0.63	2.80	EPA Region 10 Sawmill Memo Factor	NA	
LB-1	PM2.5	0.32	1.40	PM2.5 assumed to be 50% of PM10	NA	
LD-1	PM	0.00	0.00	TCEQ Wood Industry, Building Enclosure =100% Post Control	15.22 lb/hr for bark handling processes	E=3.59P^0.62 ADEM 335-3-4-.03-4
LD-1	PM10	0.00	0.00	TCEQ Wood Industry, Building Enclosure =100% Post Control	NA	
LD-1	PM2.5	0.00	0.00	TCEQ Wood Industry, Building Enclosure =100% Post Control	NA	

12. **Using a flow diagram:**

    (1) **Illustrate input of raw materials,**

    (2) **Label production processes, process fuel combustion, process equipment and air pollution control equipment,**

    (3) **Illustrate locations of air contaminant release so that emission points under item 10 can be identified.**

☑ **(Check box if extra pages are attached)**
Process flow diagram

11. **Air contaminants emitted: Basis of estimate (material balance, stack test, emission factor, etc.) must be clearly indicated on calculations appended to this form. Fugitive emissions must be included and calculations must be appended.**

Emission Point	Pollutants	Potential Emissions (lb/hr)	Potential Emissions (Tons/yr)	Potential Emissions Basis of Calculation	Regulatory Emission Limit (lb/hr)	Regulatory Emission Limit (units of standard)
BSB-1	PM	0.30	0.30	EPA Region 10 Memo, See Appendix A5	15.22 lb/hr for bark handling proceses	E = 3.59P^0.62 ADEM 335-3-4-.03-4
BSB-1	PM10	0.019	0.023	EPA Region 10 Memo, See Appendix A5	NA	
BSB-1	PM2.5	0.0092	0.012	EPA Region 10 Memo, See Appendix A5	NA	
CSB-1	PM	0.20	0.20	EPA Region 10 Memo, See Appendix A5	31.37 lb/hr for sawdust and chip processes	E = 17.31P^0.16 ADEM 335-3-4-.03-4
CSB-1	PM10	0.015	0.018	EPA Region 10 Memo, See Appendix A5	NA	
CSB-1	PM2.5	0.0072	0.009	EPA Region 10 Memo, See Appendix A5	NA	
SDSB-1	PM	0.20	0.20	EPA Region 10 Memo, See Appendix A5	31.37 lb/hr for sawdust and chip processes	E = 17.31P^0.16 ADEM 335-3-4-.03-4
SDSB-1	PM10	0.013	0.016	EPA Region 10 Memo, See Appendix A5	NA	
SDSB-1	PM2.5	0.0062	0.0077	EPA Region 10 Memo, See Appendix A5	NA	

12. **Using a flow diagram:**

    (1) **Illustrate input of raw materials,**

    (2) **Label production processes, process fuel combustion, process equipment and air pollution control equipment,**

    (3) **Illustrate locations of air contaminant release so that emission points under item 10 can be identified.**

☑ **(Check box if extra pages are attached)**
Process flow diagram

11. **Air contaminants emitted: Basis of estimate (material balance, stack test, emission factor, etc.) must be clearly indicated on calculations appended to this form. Fugitive emissions must be included and calculations must be appended.**

Emission Point	Pollutants	Potential Emissions (lb/hr)	Potential Emissions (Tons/yr)	Basis of Calculation	Regulatory Emission Limit (lb/hr)	Regulatory Emission Limit (units of standard)
SM-1	PM	12.6	55.2	TCEQ Wood Industry Factor	31.37 lb/hr for sawdust and chip processes	E = 17.31P^0.16 ADEM 335-3-4-.04-5
SM-1	PM10	7.20	31.6	TCEQ Wood Industry Factor	NA	
SM-1	PM2.5	3.60	15.8	TCEQ Wood Industry Factor	NA	
SSB-1	PM	0.014	0.062	EPA Region 10 Memo, See Appendix A5	31.37 lb/hr for sawdust and chip processes	E = 17.31P^0.16 ADEM 335-3-4-.04-5
SSB-1	PM10	0.007	0.029	EPA Region 10 Memo, See Appendix A5	NA	
SSB-1	PM2.5	0.001	0.004	EPA Region 10 Memo, See Appendix A5	NA	

12. **Using a flow diagram:**

    (1) **Illustrate input of raw materials,**

    (2) **Label production processes, process fuel combustion, process equipment and air pollution control equipment,**

    (3) **Illustrate locations of air contaminant release so that emission points under item 10 can be identified.**

☑ **(Check box if extra pages are attached)**
Process flow diagram

13. **Is this unit or process in compliance with all applicable air pollution rules and regulations?**

☑ **Yes** ☐ **No**

(if "no", a compliance schedule, Form ADEM-437 must be completed and attached.)

14. **Does the input material or product from this process or unit contain finely divided materials which could become airborne?**

☑ **Yes** ☐ **No**

15. **If "yes", is this material stored in piles or in some other facility as to make possible the creation of fugitive dust problems?**

☑ **Yes** ☐ **No**

List storage piles or other facility (if any):

Type of material	Particle size (diameter or screen size)	Pile size or facility (average tons)	Methods utilized to control fugitive emissions (wetted, covered, etc.)
Bark	NA	NA	Storage Bin (BSB-1)
Sawdust	NA	NA	Storage Bin (SDSB-1)
Chips	NA	NA	Storage Bin (CSB-1)
Shavings	NA	NA	Storage Bin (SSB-1)

Name of person preparing application: Lisa Reed, GBMc & Associates

Signature: Lisa M. Reed **Date:** 10-17-2016

ADEM 105: Process Information for Dual Path Kiln No. 1 and Condensate Evaporator No. 1

PERMIT APPLICATION
FOR
MANUFACTURING OR PROCESSING OPERATION

			-					-				

Do not write in this space

1. **Name of firm or organization:** Two Rivers Lumber Co., LLC

2. **Briefly describe the operation of this unit or process in your facility: (separate forms are to be submitted for each type of process or for multiple units of one process type. If the unit or process receives input material from, or provides input material to, another operation, please indicate the relationship between the operations.) An application should be completed for each alternative operating scenario.**

Operating scenario number 1

The rough, green lumber is sorted and stacked before being dried in a continuous lumber drying kiln. Two kilns, direct-fired with natural gas, are proposed at the facility. After drying, the rough lumber is processed in the planer mill or shipped off-site. The condensate from each kiln is routed to its respective natural gas fired condensate evaporator to eliminate any condensate discharge from the facility.

3. **Type of unit or process (e.g., calcining kiln, cupola furnace):** Dual Path Kiln No. 1/Condensate Evaporator No. 1:

Natural gas fired Dual Path Kiln equipped with a 38 MCF/hr burner with condensate routed to kiln condensate evaporator

Make: DelTech **Model:** NA

Rated process capacity (manufacturer's or designer's guaranteed maximum) in pounds/hour: 15.4 MBF/hr

Manufactured date: Upon Approval **Proposed installation date:** 1/10/2017

Original installation date (if existing): NA

Reconstruction or Modification date (if applicable): NA

4. **Normal operating schedule:**

Hours per day: 24 **Days per week:** 7 **Weeks per year:** 52

Peak production season (if any): NA

5. **Materials (feed input) used in unit or process (include solid fuel materials used, if any):**

Material	Process Rate Average (lb/hr)	Maximum (lb/hr)	Quantity tons/year
Natural Gas		38 MCF/hr	332,880 MCF/yr
Rough Green Lumber		15.4 MBF/hr	134,904 MBF/yr
Condensate from Kiln		279 gal/hr	2,444,040 gal/yr

6. **Total heat input capacity of process heating equipment (exclude fuel used by indirect heating equipment previously described on Form ADEM-104):** 38.8 **MMBtu/hr**

Fuel	Heat Content	Units	Max. % Sulfur	Max. % Ash	Grade No. [fuel oil only]	Supplier [used oil only]
Coal		Btu/lb				
Fuel Oil		Btu/gal				
Natural Gas	1020	Btu/ft^3	<0.0005	NA	NA	NA
L. P. Gas		Btu/ft^3				
Wood		Btu/lb				
Other (specify)						

7. **Products of process or unit:**

Products	Quantity/year	Units of production
Dried Lumber	134,904	MBF/yr

8. **For each regulated pollutant, describe any limitations on source operation which affects emissions or any work practice standard (attach additional page if necessary):** Proper maintenance and operation is required as BACT for the dual path lumber kiln (DPK-1). See the BACT Analysis section for more information. It is requested that the particulate matter (PM) emission limitations for this source be based on industry specific emission factors provided in this application in lieu of using the ADEM general industry process weight rule (PWR) to derive PM emissions. The design throughput of the two kilns, not to exceed 270 MMBf/year in total, demonstrates compliance with the emission estimates for the unit.

9. **Is there any emission control equipment on this emission source?**

☐ Yes ☑ No **(Where a control device exists, Form ADEM-110 must be completed and attached).**

10. **Air contaminant emission points: (Each point of emission should be listed separately and numbered so that it can be located on the attached flow diagram):**

Emission Point	Height Above Grade (Feet)	Base Elevation (Feet)	Stack Diameter (Feet)	Stack Gas Exit Velocity (Feet/Sec)	Volume of Gas Discharged (ACFM)	Exit Temperature (°F)
DPK-1	20	112	15 x 20	0.003	421	140
CE-1	5	112	N/A	N/A	N/A	Ambient

*** Std temperature is 68°F - Std pressure is 29.92" in Hg.**

11. **Air contaminants emitted: Basis of estimate (material balance, stack test, emission factor, etc.) must be clearly indicated on calculations appended to this form. Fugitive emissions must be included and calculations must be appended.**

Emission Point	Pollutants	Potential Emissions (lb/hr)	Potential Emissions (Tons/yr)	Basis of Calculation	Regulatory Emission Limit (lb/hr)	Regulatory Emission Limit (units of standard)
DPK-1	VOC as C / VOC as WPP1	58.60 / 73.10	256.40 / 320.0	BACT	N/A	
DPK-1	PM total	1.30	5.50	NCDENR and AP42 Factors	10.7	SIP Regulation ADEM 335-3-4-.03
DPK-1	PM 10	1.30	5.50	NCDENR and AP42 Factors	N/A	
DPK-1	PM 2.5	1.00	4.10	NCDENR and AP42 Factors	N/A	
DPK-1	SO2	0.02	0.10	AP42 Factor	N/A	
DPK-1	CO	3.20	14.0	AP42 Factor	N/A	
DPK-1	NOx	1.90	8.40	AP42 Factor	N/A	
DPK-1	Lead	0.000019	0.000084	AP42 Factor	N/A	
DPK-1	HAPs (see attached emission summary for HAP breakdown)	4.49E+00	1.97E+01	NCDENR and AP42 Factors	N/A	-

12. **Using a flow diagram:**

    (1) **Illustrate input of raw materials,**

    (2) **Label production processes, process fuel combustion, process equipment and air pollution control equipment,**

    (3) **Illustrate locations of air contaminant release so that emission points under item 10 can be identified.**

☑ **(Check box if extra pages are attached)**
Process flow diagram

11. **Air contaminants emitted: Basis of estimate (material balance, stack test, emission factor, etc.) must be clearly indicated on calculations appended to this form. Fugitive emissions must be included and calculations must be appended.**

Emission Point	Pollutants	Potential Emissions (lb/hr)	Potential Emissions (Tons/yr)	Potential Emissions Basis of Calculation	Regulatory Emission Limit (lb/hr)	Regulatory Emission Limit (units of standard)
CE-1	PM	0.07	0.40	Condensate chemistry and AP42 factors	3.0	E = 1.38H^-0.44 ADEM 335-3-4-.03-4
CE-1	PM10	0.07	0.40	PM10 is assumed equal to PM	NA	
CE-1	PM2.5	0.07	0.40	PM2.5 is assumed equal to PM	NA	
CE-1	SO2	0.0024	0.011	AP42 factor	NA	
CE-1	CO	0.40	1.50	AP42 factor	NA	
CE-1	NOx	0.40	1.80	AP42 factor	NA	
CE-1	VOC	0.022	0.096	BACT	NA	
CE-1	Lead	0.000002	0.0000086	AP42 factor	NA	
CE-1	HAPs (see attached emission summary for HAP breakdown)	3.90E-02	2.00E-01	Sum of HAP constituents based on AP42 factors	NA	

12. **Using a flow diagram:**

    (1) **Illustrate input of raw materials,**

    (2) **Label production processes, process fuel combustion, process equipment and air pollution control equipment,**

    (3) **Illustrate locations of air contaminant release so that emission points under item 10 can be identified.**

☑ **(Check box if extra pages are attached)**
Process flow diagram

13. **Is this unit or process in compliance with all applicable air pollution rules and regulations?**

☑ Yes ☐ No

(if "no", a compliance schedule, Form ADEM-437 must be completed and attached.)

14. **Does the input material or product from this process or unit contain finely divided materials which could become airborne?**

☐ Yes ☑ No

15. **If "yes", is this material stored in piles or in some other facility as to make possible the creation of fugitive dust problems?**

☐ Yes ☑ No

List storage piles or other facility (if any):

Type of material	Particle size (diameter or screen size)	Pile size or facility (average tons)	Methods utilized to control fugitive emissions (wetted, covered, etc.)

Name of person preparing application: Lisa Reed, GBMc & Associates

Signature: Lisa M. Reed **Date:** 10-17-2016

ADEM 105: Process Information for Dual Path Kiln No. 2 and Condensate Evaporator No. 2

PERMIT APPLICATION
FOR
MANUFACTURING OR PROCESSING OPERATION

[ ][ ][ ] - [ ][ ][ ][ ] - [ ][ ][ ][ ]
Do not write in this space

1. **Name of firm or organization:** Two Rivers Lumber Co., LLC

2. **Briefly describe the operation of this unit or process in your facility: (separate forms are to be submitted for each type of process or for multiple units of one process type. If the unit or process receives input material from, or provides input material to, another operation, please indicate the relationship between the operations.) An application should be completed for each alternative operating scenario.**

Operating scenario number 1

The rough, green lumber is sorted and stacked before being dried in a continuous lumber drying kiln. Two kilns, direct-fired with natural gas, are proposed at the facility. After drying, the rough lumber is processed in the planer mill or shipped off-site. The condensate from each kiln is routed to its respective natural gas fired condensate evaporator to eliminate any condensate discharge from the facility.

3. **Type of unit or process (e.g., calcining kiln, cupola furnace):** Dual Path Kiln No. 2/Condensate Evaporator No. 2:

Natural gas fired Dual Path Kiln equipped with a 38 MCF/hr burner with condensate routed to kiln condensate evaporator

Make: DelTech **Model:** NA

Rated process capacity (manufacturer's or designer's guaranteed maximum) in pounds/hour: 15.4 MMBF/hr

Manufactured date: Upon Approval **Proposed installation date:** 1/10/2017

Original installation date (if existing): NA

Reconstruction or Modification date (if applicable): NA

4. **Normal operating schedule:**

Hours per day: 24 **Days per week:** 7 **Weeks per year:** 52

Peak production season (if any): NA

5. **Materials (feed input) used in unit or process (include solid fuel materials used, if any):**

Material	Process Rate Average (lb/hr)	Maximum (lb/hr)	Quantity tons/year
Natural Gas		38 MCF/hr	332880 MCF/yr
Rough Green Lumber		15.4 MBF/hr	134,904 MBF/yr

6. **Total heat input capacity of process heating equipment (exclude fuel used by indirect heating equipment previously described on Form ADEM-104):** 38.8 **MMBtu/hr**

Fuel	Heat Content	Units	Max. % Sulfur	Max. % Ash	Grade No. [fuel oil only]	Supplier [used oil only]
Coal		Btu/lb				
Fuel Oil		Btu/gal				
Natural Gas	1020	Btu/ft^3	<0.0005	NA	NA	NA
L. P. Gas		Btu/ft^3				
Wood		Btu/lb				
Other (specify)						

7. **Products of process or unit:**

Products	Quantity/year	Units of production
Dried Lumber	134,904	MBF/yr

8. **For each regulated pollutant, describe any limitations on source operation which affects emissions or any work practice standard (attach additional page if necessary):** Proper maintenance and operation is required as BACT for the dual path lumber kiln (DPK-2). See the BACT Analysis section for more information. It is requested that the particulate matter (PM) emission limitations for this source be based on industry specific emission factors provided in this application in lieu of using the ADEM general industry process weight rule (PWR) to derive PM emissions. The design throughput of the two kilns, not to exceed 270 MMBf/year in total, demonstrates compliance with the emission estimates for the unit.

9. **Is there any emission control equipment on this emission source?**

☐ Yes ☑ No **(Where a control device exists, Form ADEM-110 must be completed and attached).**

10. **Air contaminant emission points: (Each point of emission should be listed separately and numbered so that it can be located on the attached flow diagram):**

Emission Point	Height Above Grade (Feet)	Base Elevation (Feet)	Stack Diameter (Feet)	Stack Gas Exit Velocity (Feet/Sec)	Volume of Gas Discharged (ACFM)	Exit Temperature (°F)
DPK-2	20	112	15 x 20	0.003	421	140
CE-2	5	112	N/A	N/A	N/A	Ambient

*** Std temperature is 68°F - Std pressure is 29.92" in Hg.**

11. **Air contaminants emitted: Basis of estimate (material balance, stack test, emission factor, etc.) must be clearly indicated on calculations appended to this form. Fugitive emissions must be included and calculations must be appended.**

Emission Point	Pollutants	Potential Emissions (lb/hr)	Potential Emissions (Tons/yr)	Basis of Calculation	Regulatory Emission Limit (lb/hr)	Regulatory Emission Limit (units of standard)
DPK-2	VOC as C / VOC as WPP1	58.60 / 73.10	256.40 / 320.0	BACT	N/A	
DPK-2	PM total	1.30	5.50	NCDENR and AP42 Factors	10.7	SIP Regulation ADEM 335-3-4-.03
DPK-2	PM 10	1.30	5.50	NCDENR and AP42 Factors	N/A	
DPK-2	PM 2.5	1.00	4.10	NCDENR and AP42 Factors	N/A	
DPK-2	SO2	0.02	0.10	AP42 Factor	N/A	
DPK-2	CO	3.20	14.0	AP42 Factor	N/A	
DPK-2	NOx	1.90	8.40	AP42 Factor	N/A	
DPK-2	Lead	0.000019	0.000084	AP42 Factor	N/A	
DPK-2	HAPs (see attached emission summary for HAP breakdown)	4.49E+00	1.97E+01	NCDENR and AP42 Factors	N/A	-

12. **Using a flow diagram:**

    (1) **Illustrate input of raw materials,**

    (2) **Label production processes, process fuel combustion, process equipment and air pollution control equipment,**

    (3) **Illustrate locations of air contaminant release so that emission points under item 10 can be identified.**

☑ **(Check box if extra pages are attached)**
Process flow diagram

11. **Air contaminants emitted: Basis of estimate (material balance, stack test, emission factor, etc.) must be clearly indicated on calculations appended to this form. Fugitive emissions must be included and calculations must be appended.**

Emission Point	Pollutants	Potential Emissions (lb/hr)	Potential Emissions (Tons/yr)	Basis of Calculation	Regulatory Emission Limit (lb/hr)	Regulatory Emission Limit (units of standard)
CE-2	PM	0.07	0.40	Condensate chemistry and AP42 factors	3.0	E = 1.38H^-0.44 ADEM 335-3-4-.03-4
CE-2	PM10	0.07	0.40	PM10 is assumed equal to PM	NA	
CE-2	PM2.5	0.07	0.40	PM2.5 is assumed equal to PM	NA	
CE-2	SO2	0.0024	0.011	AP42 factor	NA	
CE-2	CO	0.40	1.50	AP42 factor	NA	
CE-2	NOx	0.40	1.80	AP42 factor	NA	
CE-2	VOC	0.022	0.096	BACT	NA	
CE-2	Lead	0.000002	0.0000086	AP42 factor	NA	
CE-2	HAPs (see attached emission summary for HAP breakdown)	3.90E-02	2.00E-01	Sum of HAP constituents based on AP42 factors	NA	

12. **Using a flow diagram:**

    (1) **Illustrate input of raw materials,**

    (2) **Label production processes, process fuel combustion, process equipment and air pollution control equipment,**

    (3) **Illustrate locations of air contaminant release so that emission points under item 10 can be identified.**

☑ **(Check box if extra pages are attached)**
Process flow diagram

13. Is this unit or process in compliance with all applicable air pollution rules and regulations?

☑ Yes ☐ No

(if "no", a compliance schedule, Form ADEM-437 must be completed and attached.)

14. Does the input material or product from this process or unit contain finely divided materials which could become airborne?

☐ Yes ☑ No

15. If "yes", is this material stored in piles or in some other facility as to make possible the creation of fugitive dust problems?

☐ Yes ☑ No

List storage piles or other facility (if any):

Type of material	Particle size (diameter or screen size)	Pile size or facility (average tons)	Methods utilized to control fugitive emissions (wetted, covered, etc.)

Name of person preparing application: Lisa Reed, GBMc & Associates

Signature: Lisa M. Reed Date: 10-17-2016

ADEM 105: Process Information for Planer Mill

PERMIT APPLICATION
FOR
MANUFACTURING OR PROCESSING OPERATION

[ ][ ][ ] - [ ][ ][ ][ ] - [ ][ ][ ][ ]
Do not write in this space

1. **Name of firm or organization:** Two Rivers Lumber Co., LLC

2. **Briefly describe the operation of this unit or process in your facility: (separate forms are to be submitted for each type of process or for multiple units of one process type. If the unit or process receives input material from, or provides input material to, another operation, please indicate the relationship between the operations.) An application should be completed for each alternative operating scenario.**

   Operating scenario number 1

   The rough, dry lumber from kilns is finished in the planer mill. Planer shavings and planer hog trim are pneumatically conveyed from the planer mill to a cyclofilter (PM-1) for particulate control. The larger particulates are dropped onto a conveyer and mechanically routed to the shavings storage bin (SSB-1) before being shipped off site.

3. **Type of unit or process (e.g., calcining kiln, cupola furnace):** Planer Mill with Cyclofilter (see attached Form 110)

   Make: RODRIGUE METAL LTEE **Model:** CYCLOFILTER CF-12.5

   Rated process capacity (manufacturer's or designer's guaranteed maximum) in pounds/hour: 212,800

   Manufactured date: Upon Approval **Proposed installation date:** 1/10/2017

   Original installation date (if existing): N/A

   Reconstruction or Modification date (if applicable): N/A

4. **Normal operating schedule:**

   Hours per day: 24 **Days per week:** 7 **Weeks per year:** 52

   Peak production season (if any): N/A

5. **Materials (feed input) used in unit or process (include solid fuel materials used, if any):**

Material	Process Rate Average (lb/hr)	Maximum (lb/hr)	Quantity tons/year
Dried Lumber		212,800	620,558 (269,808 MBF/yr)

6. **Total heat input capacity of process heating equipment (exclude fuel used by indirect heating equipment previously described on Form ADEM-104):_____MMBtu/hr**

Fuel	Heat Content	Units	Max. % Sulfur	Max. % Ash	Grade No. [fuel oil only]	Supplier [used oil only]
Coal		Btu/lb				
Fuel Oil		Btu/gal				
Natural Gas		Btu/ft^3				
L. P. Gas		Btu/ft^3				
Wood		Btu/lb				
Other (specify)						

7. **Products of process or unit:**

Products	Quantity/year	Units of production
Shavings	48,565	ton/yr
Dried finished lumber	269,808	MBF/yr

8. **For each regulated pollutant, describe any limitations on source operation which affects emissions or any work practice standard (attach additional page if necessary):**

It is requested that the particulate matter (PM) emission limitations for this source be based on industry specific emission factors provided in this application in lieu of using the ADEM general industry process weight rule (PWR) to derive PM emissions. The design throughput of the kilns, not to 270 MMBf/year in total, demonstrates compliance with the emission estimates from the planer mill. Shavings are mechanically conveyed to the Shaving Storage Bin (SSB-1), therefore the potential emissions are fugitive and thus are included in the sawmill fugitive source group.

9. Is there any emission control equipment on this emission source?

☑ Yes ☐ No (Where a control device exists, Form ADEM-110 must be completed and attached).

10. Air contaminant emission points: (Each point of emission should be listed separately and numbered so that it can be located on the attached flow diagram):

Emission Point	Height Above Grade (Feet)	Base Elevation (Feet)	Stack Diameter (Feet)	Stack Gas Exit Velocity (Feet/Sec)	Volume of Gas Discharged (ACFM)	Exit Temperature (°F)
PM-1	60	112	4.75	18.1	77000	Ambient

* Std temperature is 68°F - Std pressure is 29.92" in Hg.

11. **Air contaminants emitted: Basis of estimate (material balance, stack test, emission factor, etc.) must be clearly indicated on calculations appended to this form. Fugitive emissions <u>must be included</u> and calculations must be appended.**

Emission Point	Pollutants	Potential Emissions (lb/hr)	Potential Emissions (Tons/yr)	Potential Emissions Basis of Calculation	Regulatory Emission Limit (lb/hr)	Regulatory Emission Limit (units of standard)
PM-1	PM	0.048	0.30	Vendor guarantee	8.62 lb/hr or shaving handling processes	E = 3.59P^0.62 ADEM 335-3-4-.04-5
PM-1	PM10	0.048	0.30	Vendor guarantee for PM and ODEQ PM10 speciation factor	NA	
PM-1	PM2.5	0.048	0.30	Vendor guarantee for PM and ODEQ PM2.5 speciation factor	NA	

12. **Using a flow diagram:**

    (1) **Illustrate input of raw materials,**

    (2) **Label production processes, process fuel combustion, process equipment and air pollution control equipment,**

    (3) **Illustrate locations of air contaminant release so that emission points under item 10 can be identified.**

☑ **(Check box if extra pages are attached)**
Process flow diagram

13. **Is this unit or process in compliance with all applicable air pollution rules and regulations?**

☑ Yes ☐ No

(if "no", a compliance schedule, Form ADEM-437 must be completed and attached.)

14. **Does the input material or product from this process or unit contain finely divided materials which could become airborne?**

☑ Yes ☐ No

15. **If "yes", is this material stored in piles or in some other facility as to make possible the creation of fugitive dust problems?**

☑ Yes ☐ No

List storage piles or other facility (if any):

Type of material	Particle size (diameter or screen size)	Pile size or facility (average tons)	Methods utilized to control fugitive emissions (wetted, covered, etc.)
Shavings (see Form 105 for SSB-1)	NA	NA	Storage Bin

Name of person preparing application: Lisa Reed, GBMc & Associates

Signature: Lisa M. Reed **Date:** 10-17-2016

ADEM 110: Application for Air Pollution Control Device

ALABAMA DEPARTMENT OF ENVIRONMENTAL MANAGEMENT
AIR DIVISION

INSTRUCTIONS FOR COMPLETING FORM ADEM-110
APPLICATION FOR AIR POLLUTION CONTROL DEVICE

All air pollution control devices which are connected in series to one process or one group of processes, whether existing or to be constructed, should be described on this form.

All questions which are applicable should be answered. Vendors' equipment specifications may be attached in order to adequately complete this form. If an item does not apply (except for Item 12), type "N/A" in that block.

Item 1: Self-explanatory

Item 2: Check all devices which are to be connected to a unit or group of units. For example, if emissions from a foundry cupola are conducted through a gas-fired afterburner, and then a quench chamber, a venturi scrubber, a cyclonic separator, the fan and stack to the atmosphere, check Afterburner, Wet Scrubber, and Other. Write "Venturi" in the space for kind of Wet scrubber and "Quench Chamber" and "Cyclonic Separator" in the space for Other.

Item 3: Self-explanatory

Item 4: Self-explanatory

Item 5: Columns are provided for 3 types of pollutants emitted by a source or sources. In most cases no more than 3 types of pollutants are regulated by the State for a particular type of source. These emission parameters for the control device should coincide with the maximum operating capacity, the greatest emission rate or the most difficult control conditions for the source. The manufacturer may not guarantee every emission parameter, but the Mass Emission Rate Required by Regulation must be stated. The Department must be assured that the owner or operator has a clear understanding of the task required of the equipment.

Item 6: Outlet conditions should be stated for those conditions within a stack or vent or at the exit to a stack or a vent. Intermediate locations may be labeled by the applicant, such as "After Cyclone" or "Before Scrubber". The velocity should be calculated based upon the actual volumetric flow.

Item 7: Self-explanatory with the exception of GEP Stack Height, which means *Good Engineering Practice (GEP)* stack height as defined in ADEM Administrative Code r. 335-3-14-.03(2)(a)5., 335-3-15-.02(9)(a)5., or 335-3-16-.02(10)(a)5., as applicable. This space should only be used if a GEP analysis has been performed or if the stack is a grandfathered stack, thus yielding a GEP stack height equivalent to "Height above grade."

ALABAMA DEPARTMENT OF ENVIRONMENTAL MANAGEMENT
AIR DIVISION

INSTRUCTIONS FOR COMPLETING FORM ADEM-110
APPLICATION FOR AIR POLLUTION CONTROL DEVICE

(Continued)

Item 8: A clear diagram must be presented, especially for proposed control systems with many elements. Additional sheets may be used, if necessary.

Item 9: Including further details with the initial application will help to expedite the issuance of a permit. Certain details may be required by the Department in order to conduct a valid review of a proposed system.

Item 10: Unusual features, such as fluidized beds, turning vanes, new designs, etc. should be illustrated here.

Item 11: Any pertinent facts not requested elsewhere are to be listed here for most devices. A number of operating parameters will be desired for complex or unusual devices, such as electrostatic precipitators, baghouses and adsorbers.

Item 12: This item must be completed. Give conditions under which the by-pass will be used. If no by-pass is to be installed, type "There will be no by-pass".

Item 13: Space is provided for two types of solid waste and two types of liquid waste. Attach additional sheets, if necessary.

Volume of solid waste should be stated in pounds per day or tons per week. Volume of liquid waste should be stated in gallons per day.

ADEM

ALABAMA DEPARTMENT OF ENVIRONMENTAL MANAGEMENT
PERMIT APPLICATION
FOR
AIR POLLUTION CONTROL DEVICE

___ - ____ - ____
(ADEM Use Only)

1. **Name of firm or organization** Two Rivers Lumber Co., LLC

2. **Type of pollution control device: (if more than one, check each; however, separate forms are to be submitted for each specific device.)**

   ☐ Settling chamber ☐ Electrostatic precipitator
   ☐ Afterburner ☒ Baghouse
   ☒ Cyclone ☐ Multiclone
   ☐ Absorber ☐ Adsorber
   ☐ Condenser ☐ Wet Suppression

   Wet scrubber (kind): _____

   Stage 1 - Vapor balance (type): _____

   Other (describe): Cyclofilter is a combined cyclone and baghouse control device.

3. **Control device manufacturer's information:**

   Name of manufacturer Rodrigue Metal **Model No.** Cyclcofilter CF12.5

4. **Emission source to which device is installed or is to be installed:**

   Planer Mill

5. **Emission parameters:**

	Pollutants Removed		
	Pollutant #1	Pollutant #2	Pollutant #3
	PM	PM10	PM2.5
Mass emission rate (#/hr)			
Uncontrolled	239	96	48
Designed	0.0480	0.0478	0.0475
Manufacturer's guaranteed			
Mass emission rate (Expressed as units of standard)			
Required by regulation	36.6	N/A	N/A
Manufacturer's guaranteed			
Removal efficiency (%)			
Designed		99.975	99.951
Manufacturer's guaranteed	99.99		

6. **Gas conditions:**

	Inlet	Intermediate Locations	Outlet
Volume (SDCFM, 68°f, 29.92" hg)	77000		77000
(ACFM, existing conditions)	77000		77000
Temperature (°F)	Ambient		Ambient
Velocity (ft/sec)	18.1		18.1
Percent moisture	Ambient		Ambient

Pressure drop across 6 **(inches H_20)**

7. **Stack dimensions:**

Height above grade ..... 60 **(feet)**

Inside diameter at exit (if opening is round) ..... 4.75 **(feet)**

Inside area at exit (if opening is not round) ..... _____ **(sq. feet)**

Base Elevation ..... 112 **(feet)**

GEP Stack Height ..... _____ **(feet)**

8. **Provide a flow diagram which includes gas exit from process, each control device, location of by-pass, fan or blower, each emission point, exits for collected pollutants, and location of sampling ports.**

See process flow diagram section of the application.

9. **Enclosed are:**

☐ **Blueprints** ☐ **Particle size distribution report**

☐ **Manufacturer's literature** ☐ **Size-efficiency curves**

☐ **Emissions test of existing installation** ☐ **Fan curves**

☒ **Other** See appendix B for cyclofilter manufacturer specifications and control efficiency chart

10. **If the pollution control device is of unusual design, please provide a sketch of the device.**

11. **List below the important operating parameters for the device. (For example: air/cloth ratio and fabric type, weight, and weave for baghouse; throat velocity and water use rate for a venturi scrubber; etc.)**

Air to cloth ratio: 7.1 acfm/ft2, 550 bags per compartment, 3,700 mm bag length, 160 mm bag diameter, pressure drop: 6 in. H2O.

12. **By-pass (if any) is to be used when:**

NA

N/A

13. **Disposal of collected air pollutants:**

	Solid waste	Solid waste	Liquid waste	Liquid waste
Volume	36,000 tpy			
Composition	Shavings			
Is waste hazardous?	No			
Method of disposal	Shavings storage bin			
Final destination	byproduct sold offsite			

If collected air pollutants are recycled, describe:

NA

N/A

Name of person preparing application Lisa Reed, GBMc & Associates

Signature Lisa M. Reed **Date** 10/17/2016

ADEM Form 110 11/11 m2

Page 3 of 3

ADEM 104: Fuel Burning Equipment Form

ALABAMA DEPARTMENT OF ENVIRONMENTAL MANAGEMENT
AIR DIVISION

INSTRUCTIONS FOR COMPLETION OF
INDIRECT HEATING EQUIPMENT
(FUEL BURNING EQUIPMENT) FORM ADEM 104

All applicable portions of this form should be completed by printing or typing. When any item is not applicable, the letters "NA" should be placed in the left margin beside the item. If the entire Form ADEM 104 is not applicable to your plant or facility, items 1 and 2 and the signature block should be completed and the words "NOT APPLICABLE" should be inserted beneath the signature block. At least one copy of this form must be included in the group of initial permit applications for each facility or plant.

For the purpose of this application, an indirect heat exchanger is defined to be a boiler or other device with the same basic function. Any questions regarding the applicability of this form should be directed to this office.

A separate permit application should be submitted for each indirect heat exchanger that requires a permit.

Items 1-5:	Are self-explanatory.
Item 6:	May be included as part of monitoring plan (if so, please indicate in space provided)
Item 7:	Potential emissions should be based on emission tests, approved emission factors, etc. All calculations should be attached
Item 8:	Is self-explanatory.
Item 9:	Potential emissions should be based on manufacturers' design, emission tests, approved emission factors, etc. All calculations should be attached
Items 10 and 11:	Are self-explanatory.

PERMIT APPLICATION
FOR
INDIRECT HEATING EQUIPMENT
(FUEL BURNING EQUIPMENT)

☐☐☐ - ☐☐☐☐ - ☐☐☐☐
Do not write in this space

1. **Name of firm or organization:** Two Rivers Lumber Co., LLC

2. **Unit Description (i.e. No. 1 Power Boiler):** NA

Equipment manufacturer's information

Name of manufacturer: NA

Model number: NA

Rated capacity-input: NA **(Btu/hr.)**

Boiler type: ☐ Fire tube ☐ Water tube ☐ other(specify): _____

Manufactured date: _____

Proposed installation date: _____

Original installation date (if existing): _____

Reconstruction or Modification date (if applicable): _____

3. **Type of fuel used:**

Primary:

Fuel	Heat Content	Units	Max. % Sulfur	Max. % Ash	Grade No. [fuel oil only]	Supplier [used oil only]
Coal		Btu/lb				
Fuel Oil		Btu/gal				
Natural Gas		Btu/ft^3				
L. P. Gas		Btu/ft^3				
Wood		Btu/lb				
Other (specify)						

Standby:

Fuel	Heat Content	Units	Max. % Sulfur	Max. % Ash	Grade No. [fuel oil only]	Supplier [used oil only]
Coal		Btu/lb				
Fuel Oil		Btu/gal				
Natural Gas		Btu/ft^3				
L. P. Gas		Btu/ft^3				
Wood		Btu/lb				
Other (specify)						

4. Purpose (if multipurpose, note percent in each use category):

☐Space heat _____ % ☐Power generation _____ % ☐Process heat _____ %

Other (specify): _____

5. Normal schedule of operation:

Hours per day: _____ Days per week: _____ Weeks per year: _____

6. For each regulated pollutant, describe any limitations on source operation which affects emissions or any work

practice standard (attach additional page if necessary): _____

_____

_____

7. Fugitive Emissions (attach calculation worksheets):

POLLUTANT	POTENTIAL EMISSIONS		BASIS OF CALCULATION	REGULATORY EMISSION LIMIT	REGULATORY EMISSION LIMIT
	lb/hr	t/yr		(lb/hr)	(in units of standard)
Particulate					
Sulfur dioxide					
Nitrogen oxides					
Carbon monoxide					
VOC's					
Other					

8. Is there any emission control equipment on this emission source?

☐Yes ☐No (If "yes", complete form ADEM-110)

9. **Point Emissions (attach calculation worksheets):**

POLLUTANT	POTENTIAL EMISSIONS lb/hr	POTENTIAL EMISSIONS t/yr	BASIS OF CALCULATION	REGULATORY EMISSION LIMIT (lb/hr)	REGULATORY EMISSION LIMIT (in units of standard)
Particulate					
Sulfur dioxide					
Nitrogen oxides					
Carbon monoxide					
VOC's					
Other					

10. **Stack data:**

Height above grade _____ (feet) Gas temperature at exit _____ (°F)

Inside diameter at exit _____ (feet) Volume of gas discharged _____ (ACFM)

Base Elevation _____ (feet)

Are sampling ports available? ☐ Yes ☐ No (If "yes", describe. Draw on separate sheet if necessary):

_____

_____

11. **Is this item in compliance with all applicable air pollution rules and regulations?**

☐ Yes ☐ No (if "no", a compliance schedule, form ADEM-114, must be attached.)

Name of person preparing application: Lisa Reed, GBMc & Associates

Signature: Lisa M. Reed Date: 10/17/2016

NOT APPLICABLE

ADEM 106: Waste Disposal Form

ALABAMA DEPARTMENT OF ENVIRONMENTAL MANAGEMENT
Air Division

INSTRUCTIONS FOR COMPLETION OF DATA SHEET FOR WASTE DISPOSAL
FORM ADEM 106

All applicable portions of this form should be completed by printing or typing. When any item is not applicable, the letters "NA" should be placed in the left margin beside the item. If the entire Form ADEM 106 is not applicable to your plant or facility, Item 1 and the signature block should be completed and the words "NOT APPLICABLE" should be inserted beneath the signature block. At least one copy of this form must be included in the group of initial permit applications for each facility or plant.

This form serves two purposes. The primary purpose is to provide information for the permit application. The secondary purpose is to inventory the waste generated at each plant and determine the method used to dispose of it. The form may be considered not applicable if normal office waste is the only waste generated and it is not burned. Otherwise, all applicable sections must be completed whether a permit is required or not.

SECTION I

Item 1: Identify the name of the facility.

Item 2: The quantity (tons per year) of each type of waste generated should be provided and the method of disposal indicated. Please use the disposal codes listed beneath the box.

Item 3: Indicate whether the disposal methods comply with all applicable air pollution regulations. If they do not, attach a Form ADEM 114.

SECTION II

Complete this section if any waste is disposed of by incineration.

Item 1: This information is design criteria and can be found on the incinerator manufacturer's name plate. The name plate should be in a conspicuous place on the incinerator. The "Type of Waste" refers to the Incinerator Institute of America classification of waste (except for Type 7, hazardous waste).

Items 2 - 13: Self-explanatory

PERMIT APPLICATION
FOR
WASTE DISPOSAL

☐☐☐ - ☐☐☐☐ - ☐☐☐☐
Do not write in this space

SECTION I

1. **Name of firm or organization:** Two Rivers Lumber Co., LLC

2. **Type and quantity of waste generated:**

Type waste	Quantity - tons/yr	Disposal method code*
Paper		
Cardboard		
Wood		
Plastic		
Rubber		
Gaseous		
Liquid		
Pathological		
Incombustibles		
Garbage		
Other		

* method codes

(1) incineration

(2) company operated on-site disposal

(3) commercial disposal service

(4) hauled by source to separate disposal site

(5) sold or otherwise transferred to another source for reclaiming or recycling

(6) other (specify): _____

3. **Do the methods used for disposing of waste comply with all applicable air pollution rules and regulations?**

☐yes ☐no

(if "no", a compliance schedule, Form ADEM-114, must be completed and attached.)

SECTION II

If waste disposal is by incineration, please complete the following:

1. **Incinerator manufacturer's information:**

   a. **Name of manufacturer:** _____

   b. **Model number:** _____

   c. **Rated capacity (specify units):** _____

   d. **Check type of waste (see final page for definitions of waste types)**

   ☐Type 0 ☐Type 1 ☐Type 2 ☐Type 3 ☐Type 4 ☐Type 5 ☐Type 6 ☐Type 7

2. **Type of incinerator (check all applicable):**

   ☐Single chamber ☐Multiple chamber

   ☐Other (specify): _____

3. **Auxiliary equipment (check all applicable):**

   ☐Primary burner Fuel: _____ (type)

   ☐Secondary burner Fuel: _____ (type)

4. **Combustion air:**

   ☐Natural draft ☐Starved air ☐Induced draft ☐Forced draft

   ☐Other (specify): _____

5. **Have tests been performed on this model incinerator?**

   ☐yes ☐no if yes, attach copy of report

6. **Waste feed method:**

   ☐Fuel fed ☐Continuous direct ☐Chute fed ☐Batch direct

7. Operating schedule (typical)

Hours per day: from: _____ (time) to: _____ (time)

Days per week: _____ on: m☐ t☐ w☐ t☐ f☐ s☐ s☐

Weeks per year: _____

8. For each regulated pollutant, describe any limitations on source operation which affects emissions or any work practice standard (attach additional pages if necessary): _____

_____

_____

9. Fugitive Emissions (attach calculation worksheets):

POLLUTANT	POTENTIAL EMISSIONS lb/hr	t/yr	BASIS OF CALCULATION	REGULATORY EMISSION LIMIT (lb/hr)	REGULATORY EMISSION LIMIT (in units of standard)
Particulate					
Sulfur dioxide					
Nitrogen oxides					
Carbon monoxide					
Volatile organic compounds					
Other					

10. Is there any emission control equipment on the incinerator?

☐yes ☐no if "yes", complete Form ADEM-110

11. Point Emissions (attach calculation worksheets):

POLLUTANT	POTENTIAL EMISSIONS lb/hr	t/yr	BASIS OF CALCULATION	REGULATORY EMISSION LIMIT (lb/hr)	REGULATORY EMISSION LIMIT (in units of standard)
Particulate					
Sulfur dioxide					
Nitrogen oxides					
Carbon monoxide					
Volatile organic compounds					
Other					

12. Stack data:

Height above grade _____ (feet) Gas temperature at exit _____ (°F)

Inside diameter at exit _____ (feet) Volume of gas discharged _____ (ACFM)

Base Elevation _____ (feet)

Are sampling ports available? ☐Yes ☐No (If "yes", describe. Draw on separate sheet if necessary)

13. Is this item in compliance with all applicable air pollution rules and regulations?

☐Yes ☐No (if "no", a compliance schedule, Form ADEM-114, must be attached.)

Name of person preparing application (PRINT or TYPE): Lisa Reed, GBMc & Associates

Signature: Lisa M. Reed Date: 10/17/2016

NOT APPLICABLE

CLASSIFICATION OF WASTES

Type 0 Trash, a mixture of highly combustible waste such as paper, cardboard, cartons, wood boxes, and combustible floor sweepings, form commercial and industrial activities. The mixtures contain up to 10% by weight of plastic bags, coated paper, laminated paper, treated corrugated cardboard, oily rags, and plastic or rubber scraps.

This type of waste contains 10% moisture, 5% incombustible solids and has a heating value of 8500 Btu per pound as fired.

Type 1 Rubbish, a mixture of combustible waste such as paper, cardboard, cartons, wood scraps foliage and combustible floor sweepings, from domestic, commercial and industrial activities. The mixture contains up to 20% by weight of restaurant or cafeteria waste, but contains little or no treated papers, plastic or rubber wastes.

Type 2 Refuse, consisting of an approximately even mixture rubbish and garbage by weight.

This type of waste is common to apartment and residential occupancy consisting of up to 50% moisture, 7% incombustible solids, and has a heating value of 4300 Btu per pound as fired.

Type 3 Garbage, consisting of animal and vegetable wastes from restaurants, cafeterias, hotels, hospitals, markets, and like installations.

This type of waste contains up to 70% moisture, up to 5% incombustible solids and has a heating value of 2500 Btu per pound as fired

Type 4 Human an animal remains, consisting of carcasses, organs and solid organic wastes from hospitals, laboratories, abattoirs, animal pounds, and similar sources, consisting of up to 85% moisture, 5% incombustible solids, and having a heating value of 1000 Btu per pound as fired.

Type 5 By-product waste, gaseous, liquid or semi-liquid, such as tar, paints, solvents, sludge, fumes, etc., from industrial operations. Heating values must be determined by the individual materials to be destroyed.

Type 6 Solid by-product waste, such as rubber, plastics, wood waste, etc. from industrial operations. Heating values must be determined by the individual materials to be destroyed.

Type 7 Hazardous waste as defined in 40 CFR Part 261, Subpart A, Paragraph 261.3.

ADEM 437: Compliance Schedule

ALABAMA DEPARTMENT OF ENVIRONMENTAL MANAGEMENT
AIR DIVISION

INSTRUCTIONS FOR COMPLETION OF ADEM FORM-437
COMPLIANCE SCHEDULE

All applicable portions of this form should be completed by printing or typing. When any item is not applicable, the letters "NA" should be placed in the left margin beside the item. If the entire Form ADEM-437 is not applicable to your plant or facility, items 1 through 4 and the signature block should be completed and the words "NOT APPLICABLE" should be inserted beneath the signature block. At least one copy of this Form must be included in the group of initial permit applications for each facility or plant.

A separate copy of this Form is to be completed for each process, operation, machine or other source which is not in compliance with an applicable air pollution control regulation.

Item 1: Self-explanatory

Item 2: Type in the unit for which the compliance schedule is being completed.

Item 3: Describe the schedule for achieving compliance for the unit. Include in the schedule the time when any major event is to be completed. This would include design, construction and installation of any air pollution control devices that are needed to achieve and maintain compliance.

Item 4: The method of determining compliance should be entered here. Types of compliance techniques include stack tests, continuous emission monitors and visible emissions tests.

Item 5: Self-explanatory

ADEM Form 437 1/06 m1

PERMIT APPLICATION
FOR
COMPLIANCE SCHEDULE

			-					-				

Do not write in this space

1. **Name of firm or organization:** Two Rivers Lumber Co., LLC

2. **Compliance schedule for:** N/A

3. **Compliance schedule (include schedule of remedial measures leading to compliance) and schedule for submittal of progress reports (must be at least once every six months):**

   N/A

4. **Describe method(s) to be used to determine compliance:** N/A

5. **Date by which item will be in complete compliance with all applicable air pollution control rules and regulations:**

   _____
   month/day/year

Name of person preparing schedule: Lisa Reed, GBMc & Associates

Signature: Lisa M. Reed **Date:** 10/17/2016

NOT APPLICABLE

ADEM Form 437 1/06 m1

Page 1 of 1

ADEM 445: PSD Project Information

PROJECT INFORMATION SHEET

PROJECT NAME: Two Rivers Lumber Co., LLC

PROJECT DESCRIPTION, INCLUDING NATURE OF PROJECT (i.e., New or Modified facility):

New Sawmill Facility

PROJECT LOCATION (i.e., STATE, COUNTY, NEAREST CITY; UTM COORDINATES):

Industrial Park Road, Demopolis (Marengo County), Alabama 36732
UTM: 409956 E 3592041 N

LIST OF CLASS I AREAS WITHIN 100 KM OF THE PROPOSED SOURCE OR THOSE THAT THE PERMITTING AUTHORITY BELIEVES MAY BE IMPACTED BY A LARGE SOURCE WHICH IS BEYOND 100 KM. INCLUDE DISTANCE AND DIRECTION FROM THE CLASS I AREAS TO THE SOURCE:

No class I areas are within 100 km of the proposed facility and all associated sources.

PROPOSED EMISSION RATES AND/OR INCREASES:

EMISSIONS	lb/hr	TPY
SO_2	0.05	0.3
NO_X	4.6	20.4
PM	2.8	12.1
CO	7.2	31.0
VOC	117.3	513.0
Other (List)		
Other (List)		
Other (List)		

PROPOSED EMISSION CONTROL TECHNOLOGY AND PROPOSED REMPOVAL EFFICIENCY/EMISSION RATE (USING RBLC STANDARD UNITS, i.e., ppm, lb/MMBtu)

Proper Operation and Maintenance is proposed as BACT.

BRIEF SUMMARY OF ANY CLASS I ANALYSES CONTAINED IN THE APPLICATION (E.g., INCREMENT CONSUMPTION, VISIBILITY, DEPOSITION ANALYSES)

No class I areas are within 100 km of the proposed facility and all associated sources. See PSD Applicability Section for more information.

COMPANY CONTACT: Jay McElroy

MAILING ADDRESS:

PO Box 104, Cuba, Alabama, 36907

TELEPHONE AND FAX NUMBERS:

Telephone: 205-392-5579 ext. 125

STATE CONTACT: **TIM OWEN, CHIEF, ENGINEERING BRANCH**

MAILING ADDRESS: **ADEM - AIR DIVISION**
P.O. BOX 301463
MONTGOMERY, AL 36130-1463

TELEPHONE AND FAX NUMBERS: **334/271-7861 (PHONE)**
334/279-3044 (FAX)

ADEM Form 445
8/02

Emission Summary

EMISSION SUMMARY

The potential emissions at Two Rivers Lumber have been calculated in accordance with ADEM Admin Code R. 335-3-14-.04(2)(d) and are summarized in this section. ADEM has general industrial process emission estimation methodologies for calculating the allowable potential to emit (PTE) for particulate matter (PM). However, industry and source specific emission factors were used to estimate the requested PTE for the sources at the mill using information available from a range of sources including: AP-42, EPA regional offices, and other state regulatory agencies. Use of each of these resources are further explained within the emission calculations with copies of the documents utilized included within the application's appendices.

In accordance with ADEM Admin. Code R. 335-3-4-.03(4) and 335-3-4-.04(5), new process emission sources that emit PM are subject to ADEM Admin. Code R. 335-3-4-.03(1) and 335-3-4-.04(1), respectively. This regulation limits the allowable PM emissions based on the following equations, known as the process weight rule (PWR), where E is the PM emission rate (lb/hr), P is the process weight input rate (ton/hr), and H is the heat capacity of the fuel burning equipment (MMBtu/hr):

ADEM Admin. Code R. 335-3-4-.03(1)
For 10 MMBtu/hr > H < 250 MMBtu/hr: $E= 1.38H^{-0.44}$

ADEM Admin. Code R. 335-3-4-.04(1)
For P < 30 ton/hr: $E= 3.59P^{0.62}$
For P > 30 ton/hr: $E= 17.31P^{0.16}$

Since Two Rivers Lumber is a new facility, the PWR applies to all permitted emission sources that emit PM. In accordance with ADEM Admin. Code R. 335-3-1-0.2(iii) "Process Weight Per Hour" (i.e. "P" in the PWR equations) shall mean the total weight of all materials introduced into any specific process that may cause any discharge of particulate matter. Therefore, the process weight input rate "P", in the PWR equation was assumed to be equal to the byproducts produced. In accordance with ADEM Admin. Code R. 335-3-4-.04(4), the total byproduct weights were used to calculate the allowable PM emissions using the PWR equation for each bubbled process area that produced each byproduct to prevent double counting. Since the PWR equation calculates the allowable lb/hr PM emissions, year round (8,760 hours per year) operation was assumed to derive the annual allowable tons per year PM emissions, thus the expected annual throughputs were divided by 8,760 to derive the process weight input rate "P" ton/hr production value.

The allowable PM emissions from the fuel burning equipment at the facility including the dual path kilns (DPK-1, DPK-2) and condensate evaporators (CE-1, CE-2) have been estimated using the PWR equation contained in section ADEM Admin. Code R. 335-3-4-.03(1).

As demonstrated below, the allowable PTE for PM calculated using the PWR significantly overestimates the facility's particulate emissions indicating Two Rivers Lumber exceeds the PSD threshold for PM. Therefore, Two Rivers Lumber requests the PM emission limits be set to the proposed PM emission rates as provided in this application using wood products industry emission factors and emission estimate methodology. Table 1 below shows the mill's PTE of PM using the PWR equations to calculate allowable emission estimates compared to requested PM limits calculated using industry and process specific estimate methodology.

Table 1. PWR Estimated PM Emissions vs. Industry and Source Specific Requested Emissions

Process Description	Process ID	Byproduct produced (P) or Heat Capacity (H)	Maximum Hourly Throughput, P* (ton/hr) or H (MMBtu/hr)	PWR Allowable PTE PM Emissions, E (lb/hr)	PWR Allowable PTE PM Emissions (tpy)	Requested PM Emission Limits (tpy)
Log Debarker	LD-1	P = Bark Production	10.28	15.22	66.66	0.00
Bark Storage Bin	BSB-1					0.30
Bark Hog	BH-1					0.054
Log Bucking	LB-1	P = Sawdust & Chip Production	41.10	31.37	137.40	1.50
Sawmill	SM-1					14.20
Sawdust Storage Bin	SDSB-1					0.20
Sawmill Chipper	SC-1					0.049
Chip Storage Bin	CSB-1					0.20
Planer Mill	PM-1	P = Shavings Production	4.11	8.62	37.77	0.030
Shavings Storage Bin	SSB-1					0.060
Dual Path Kiln No. 1	DPK-1	H = Natural Gas Burner Heat Capacity	38.8	10.70	46.87	2.40
Dual Path Kiln No. 2	DPK-2		38.8	10.70	46.87	2.40
Condensate Evaporator No. 1	CE-1		0.882	3.0	13.14	0.20
Condensate Evaporator No. 2	CE-2		0.882	3.0	13.14	0.20
				PM Totals (tpy):	361.85	21.8

* P (tons/hr) was estimated based on the annual byproduct throughput divided by 8,760 hours operation per year.

The facility wide and source specific emission summary table is presented in the following pages. These emissions are presented as the potential emission estimations for Two Rivers Lumber based on industry and process specific emission factors. The emission summary table also contains the speciated HAPs for each emission point not listed in Section 11 of the required ADEM 105 Forms due to space limitations in the form. The emission calculations can be found in the emission calculations section of the application.

EMISSION SUMMARY (Non-Fugitive Sources - DPK-1, DPK-1, CE-1, CE-2, PM-1)

Description	Pollutant	Proposed Permit Limits	
		lb/hr	tpy
Total Criteria Pollutant Emissions	PM	2.79	12.10
	PM_{10}	2.79	12.10
	$PM_{2.5}$	2.19	9.30
	SO_2	0.05	0.22
	VOC as C	117.24	512.99
	VOC (WPP1)	146.20	640.00
	CO	7.20	31.00
	NO_X	4.60	20.40
Total HAP Emissions	Methanol	6.14E+00	2.69E+01
	Lead	4.20E-05	1.85E-04
	Phenol	3.08E-01	1.35E+00
	Acetaldehyde	1.60E+00	7.02E+00
	Acrolein	2.32E-01	1.01E+00
	Benzene	1.76E-04	7.74E-04
	Formaldehyde	5.71E-01	2.50E+00
	Dichlorobenzene	1.01E-04	4.42E-04
	Hexane	1.51E-01	6.62E-01
	Naphthalene	5.12E-05	2.26E-04
	Toluene	2.86E-04	1.25E-03
	Arsenic	1.68E-05	7.36E-05
	Beryllium	1.01E-06	4.42E-06
	Cadmium	9.24E-05	4.04E-04
	Chromium	1.17E-04	5.16E-04
	Cobalt	7.04E-06	3.10E-05
	Manganese	3.18E-05	1.40E-04
	Mercury	2.20E-05	9.56E-05
	Nickel	1.76E-04	7.74E-04
	Selenium	2.01E-06	8.82E-06
	POM	7.40E-06	3.26E-05
	Total HAPs	9.06E+00	3.980E+01

Description	Pollutant	Proposed Permit Limits	
		lb/hr	tpy
Planer Mill Cyclofilter (PM-1)	PM	0.048	0.300
	PM_{10}	0.048	0.300
	$PM_{2.5}$	0.048	0.300
Dual Path Kiln No. 1 (DPK-1)	PM	1.30	5.50
	PM_{10}	1.30	5.50
	$PM_{2.5}$	1.00	4.10
	SO_2	0.02	0.10
	VOC as C	58.60	256.40
	VOC (WPP1)	73.10	320.00
	CO	3.20	14.00
	NO_x	1.90	8.40
	Lead	1.90E-05	8.40E-05
	Methanol	3.06E+00	1.34E+01
	Phenol	1.54E-01	6.75E-01
	Acetaldehyde	8.01E-01	3.51E+00
	Acrolein	1.16E-01	5.06E-01
	Benzene	7.98E-05	3.50E-04
	Formaldehyde	2.85E-01	1.25E+00
	Dichlorobenzene	4.56E-05	2.00E-04
	Hexane	6.84E-02	3.00E-01
	Naphthalene	2.32E-05	1.02E-04
	Toluene	1.29E-04	5.66E-04
	Arsenic	7.60E-06	3.33E-05
	Beryllium	4.56E-07	2.00E-06
	Cadmium	4.18E-05	1.83E-04
	Chromium	5.32E-05	2.33E-04
	Cobalt	3.19E-06	1.40E-05
	Manganese	1.44E-05	6.32E-05
	Mercury	9.88E-06	4.33E-05
	Nickel	7.98E-05	3.50E-04
	Selenium	9.12E-07	3.99E-06
	POM	3.35E-06	1.47E-05
	Total HAPs	4.49E+00	1.97E+01
Dual Path Kiln No. 2 (DPK-2)	PM	1.30	5.50
	PM_{10}	1.30	5.50
	$PM_{2.5}$	1.00	4.10
	SO_2	0.02	0.10
	VOC as C	58.60	256.4
	VOC (WPP1)	73.10	320.0
	CO	3.20	14.0
	NO_x	1.90	8.40
	Lead	1.90E-05	8.40E-05
	Methanol	3.06E+00	1.34E+01
	Phenol	1.54E-01	6.75E-01
	Acetaldehyde	8.01E-01	3.51E+00
	Acrolein	1.16E-01	5.06E-01
	Benzene	7.98E-05	3.50E-04
	Formaldehyde	2.85E-01	1.25E+00
	Dichlorobenzene	4.56E-05	2.00E-04
	Hexane	6.84E-02	3.00E-01
	Naphthalene	2.32E-05	1.02E-04
	Toluene	1.29E-04	5.66E-04
	Arsenic	7.60E-06	3.33E-05
	Beryllium	4.56E-07	2.00E-06
	Cadmium	4.18E-05	1.83E-04
	Chromium	5.32E-05	2.33E-04
	Cobalt	3.19E-06	1.40E-05
	Manganese	1.44E-05	6.32E-05
	Mercury	9.88E-06	4.33E-05
	Nickel	7.98E-05	3.50E-04
	Selenium	9.12E-07	3.99E-06
	POM	3.35E-06	1.47E-05
	Total HAPs	4.49E+00	1.97E+01

Description	Pollutant	Proposed Permit Limits	
		lb/hr	tpy
Kiln Condensate Evaporator No. 1 (CE-1)	PM	0.07	0.4
	PM_{10}	0.07	0.4
	$PM_{2.5}$	0.07	0.4
	SO_2	0.0024	0.011
	CO	0.4	1.5
	NO_x	0.4	1.8
	Lead	2.00E-06	8.60E-06
	Methanol	9.10E-03	4.00E-02
	VOC as C	2.20E-02	9.60E-02
	Benzene	8.30E-06	3.70E-05
	Formaldehyde	3.00E-04	1.30E-03
	Dichlorobenzene	4.80E-06	2.10E-05
	Hexane	7.10E-03	3.10E-02
	Naphthalene	2.40E-06	1.10E-05
	Toluene	1.40E-05	5.90E-05
	Arsenic	7.90E-07	3.50E-06
	Beryllium	4.80E-08	2.10E-07
	Cadmium	4.40E-06	1.90E-05
	Chromium	5.50E-06	2.50E-05
	Cobalt	3.30E-07	1.50E-06
	Manganese	1.50E-06	6.60E-06
	Mercury	1.10E-06	4.50E-06
	Nickel	8.30E-06	3.70E-05
	Selenium	9.50E-08	4.20E-07
	POM	3.50E-07	1.60E-06
	Total HAPs	3.90E-02	2.00E-01
Kiln Condensate Evaporator No. 2 (CE-2)	PM	0.07	0.4
	PM_{10}	0.07	0.4
	$PM_{2.5}$	0.07	0.4
	SO_2	0.0024	0.011
	CO	0.4	1.5
	NO_x	0.4	1.8
	Lead	2.00E-06	8.60E-06
	Methanol	9.10E-03	4.00E-02
	VOC as C	2.20E-02	9.60E-02
	Benzene	8.30E-06	3.70E-05
	Formaldehyde	3.00E-04	1.30E-03
	Dichlorobenzene	4.80E-06	2.10E-05
	Hexane	7.10E-03	3.10E-02
	Naphthalene	2.40E-06	1.10E-05
	Toluene	1.40E-05	5.90E-05
	Arsenic	7.90E-07	3.50E-06
	Beryllium	4.80E-08	2.10E-07
	Cadmium	4.40E-06	1.90E-05
	Chromium	5.50E-06	2.50E-05
	Cobalt	3.30E-07	1.50E-06
	Manganese	1.50E-06	6.60E-06
	Mercury	1.10E-06	4.50E-06
	Nickel	8.30E-06	3.70E-05
	Selenium	9.50E-08	4.20E-07
	POM	3.50E-07	1.60E-06
	Total HAPs	3.90E-02	2.00E-01

EMISSION SUMMARY

Description	Pollutant	Proposed Permit Limits	
		lb/hr	tpy
Total Criteria Pollutant Emissions	PM	17.52	74.26
	PM_{10}	10.73	46.85
	$PM_{2.5}$	6.16	26.66
	SO_2	0.05	0.22
	VOC as C	117.24	512.99
	VOC (WPP1)	146.20	640.00
	CO	7.20	31.00
	NO_X	4.60	20.40
Total HAP Emissions	Methanol	6.14E+00	2.69E+01
	Lead	4.20E-05	1.85E-04
	Phenol	3.08E-01	1.35E+00
	Acetaldehyde	1.60E+00	7.02E+00
	Acrolein	2.32E-01	1.01E+00
	Benzene	1.76E-04	7.74E-04
	Formaldehyde	5.71E-01	2.50E+00
	Dichlorobenzene	1.01E-04	4.42E-04
	Hexane	1.51E-01	6.62E-01
	Naphthalene	5.12E-05	2.26E-04
	Toluene	2.86E-04	1.25E-03
	Arsenic	1.68E-05	7.36E-05
	Beryllium	1.01E-06	4.42E-06
	Cadmium	9.24E-05	4.04E-04
	Chromium	1.17E-04	5.16E-04
	Cobalt	7.04E-06	3.10E-05
	Manganese	3.18E-05	1.40E-04
	Mercury	2.20E-05	9.56E-05
	Nickel	1.76E-04	7.74E-04
	Selenium	2.01E-06	8.82E-06
	POM	7.40E-06	3.26E-05
	Total HAPs	9.06E+00	3.980E+01
Log Processing Debarker (LD-1)	PM	0.00	0.00
	PM_{10}	0.00	0.00
	$PM_{2.5}$	0.00	0.00
Log Bucking (LB-1)	PM	1.26	5.60
	PM_{10}	0.63	2.80
	$PM_{2.5}$	0.32	1.40
Bark Hog (BH-1)	PM	0.04	0.20
	PM_{10}	0.02	0.09
	$PM_{2.5}$	0.01	0.04
Sawmill Chipper (SC-1)	PM	0.08	0.40
	PM_{10}	0.04	0.20
	$PM_{2.5}$	0.02	0.09
Sawmill (SM-1)	PM	12.60	55.200
	PM_{10}	7.20	31.600
	$PM_{2.5}$	3.60	15.800
Planer Mill Cyclofilter (PM-1)	PM	0.048	0.300
	PM_{10}	0.048	0.300
	$PM_{2.5}$	0.048	0.300
Chip Storage Bin (CSB-1)	PM	0.2	0.2
	PM_{10}	0.015	0.018
	$PM_{2.5}$	0.0072	0.009
Bark Storage Bin (BSB-1)	PM	0.3	0.3
	PM_{10}	0.019	0.023
	$PM_{2.5}$	0.0092	0.012
Sawdust Storage Bin (SDSB-1)	PM	0.2	0.2
	PM_{10}	0.013	0.016
	$PM_{2.5}$	0.0062	0.0077
Shavings Storage Bin (SSB-1)	PM	0.048	0.06
	PM_{10}	0.0039	0.0049
	$PM_{2.5}$	0.002	0.0025

Description	Pollutant	Proposed Permit Limits	
		lb/hr	tpy
Dual Path Kiln No. 1 (DPK-1)	PM	1.30	5.50
	PM_{10}	1.30	5.50
	$PM_{2.5}$	1.00	4.10
	SO_2	0.02	0.10
	VOC as C	58.60	256.40
	VOC (WPP1)	73.10	320.00
	CO	3.20	14.00
	NO_x	1.90	8.40
	Lead	1.90E-05	8.40E-05
	Methanol	3.06E+00	1.34E+01
	Phenol	1.54E-01	6.75E-01
	Acetaldehyde	8.01E-01	3.51E+00
	Acrolein	1.16E-01	5.06E-01
	Benzene	7.98E-05	3.50E-04
	Formaldehyde	2.85E-01	1.25E+00
	Dichlorobenzene	4.56E-05	2.00E-04
	Hexane	6.84E-02	3.00E-01
	Naphthalene	2.32E-05	1.02E-04
	Toluene	1.29E-04	5.66E-04
	Arsenic	7.60E-06	3.33E-05
	Beryllium	4.56E-07	2.00E-06
	Cadmium	4.18E-05	1.83E-04
	Chromium	5.32E-05	2.33E-04
	Cobalt	3.19E-06	1.40E-05
	Manganese	1.44E-05	6.32E-05
	Mercury	9.88E-06	4.33E-05
	Nickel	7.98E-05	3.50E-04
	Selenium	9.12E-07	3.99E-06
	POM	3.35E-06	1.47E-05
	Total HAPs	4.49E+00	1.97E+01
Dual Path Kiln No. 2 (DPK-2)	PM	1.30	5.50
	PM_{10}	1.30	5.50
	$PM_{2.5}$	1.00	4.10
	SO_2	0.02	0.10
	VOC as C	58.60	256.4
	VOC (WPP1)	73.10	320.0
	CO	3.20	14.0
	NO_x	1.90	8.40
	Lead	1.90E-05	8.40E-05
	Methanol	3.06E+00	1.34E+01
	Phenol	1.54E-01	6.75E-01
	Acetaldehyde	8.01E-01	3.51E+00
	Acrolein	1.16E-01	5.06E-01
	Benzene	7.98E-05	3.50E-04
	Formaldehyde	2.85E-01	1.25E+00
	Dichlorobenzene	4.56E-05	2.00E-04
	Hexane	6.84E-02	3.00E-01
	Naphthalene	2.32E-05	1.02E-04
	Toluene	1.29E-04	5.66E-04
	Arsenic	7.60E-06	3.33E-05
	Beryllium	4.56E-07	2.00E-06
	Cadmium	4.18E-05	1.83E-04
	Chromium	5.32E-05	2.33E-04
	Cobalt	3.19E-06	1.40E-05
	Manganese	1.44E-05	6.32E-05
	Mercury	9.88E-06	4.33E-05
	Nickel	7.98E-05	3.50E-04
	Selenium	9.12E-07	3.99E-06
	POM	3.35E-06	1.47E-05
	Total HAPs	4.49E+00	1.97E+01

Description	Pollutant	Proposed Permit Limits	
		lb/hr	tpy
Kiln Condensate Evaporator No. 1 (CE-1)	PM	0.07	0.4
	PM_{10}	0.07	0.4
	$PM_{2.5}$	0.07	0.4
	SO_2	0.0024	0.011
	CO	0.4	1.5
	NO_x	0.4	1.8
	Lead	2.00E-06	8.60E-06
	Methanol	9.10E-03	4.00E-02
	VOC as C	2.20E-02	9.60E-02
	Benzene	8.30E-06	3.70E-05
	Formaldehyde	3.00E-04	1.30E-03
	Dichlorobenzene	4.80E-06	2.10E-05
	Hexane	7.10E-03	3.10E-02
	Naphthalene	2.40E-06	1.10E-05
	Toluene	1.40E-05	5.90E-05
	Arsenic	7.90E-07	3.50E-06
	Beryllium	4.80E-08	2.10E-07
	Cadmium	4.40E-06	1.90E-05
	Chromium	5.50E-06	2.50E-05
	Cobalt	3.30E-07	1.50E-06
	Manganese	1.50E-06	6.60E-06
	Mercury	1.10E-06	4.50E-06
	Nickel	8.30E-06	3.70E-05
	Selenium	9.50E-08	4.20E-07
	POM	3.50E-07	1.60E-06
	Total HAPs	3.90E-02	2.00E-01
Kiln Condensate Evaporator No. 2 (CE-2)	PM	0.07	0.4
	PM_{10}	0.07	0.4
	$PM_{2.5}$	0.07	0.4
	SO_2	0.0024	0.011
	CO	0.4	1.5
	NO_x	0.4	1.8
	Lead	2.00E-06	8.60E-06
	Methanol	9.10E-03	4.00E-02
	VOC as C	2.20E-02	9.60E-02
	Benzene	8.30E-06	3.70E-05
	Formaldehyde	3.00E-04	1.30E-03
	Dichlorobenzene	4.80E-06	2.10E-05
	Hexane	7.10E-03	3.10E-02
	Naphthalene	2.40E-06	1.10E-05
	Toluene	1.40E-05	5.90E-05
	Arsenic	7.90E-07	3.50E-06
	Beryllium	4.80E-08	2.10E-07
	Cadmium	4.40E-06	1.90E-05
	Chromium	5.50E-06	2.50E-05
	Cobalt	3.30E-07	1.50E-06
	Manganese	1.50E-06	6.60E-06
	Mercury	1.10E-06	4.50E-06
	Nickel	8.30E-06	3.70E-05
	Selenium	9.50E-08	4.20E-07
	POM	3.50E-07	1.60E-06
	Total HAPs	3.90E-02	2.00E-01

Emission Calculations

Log Process Debarking (Proposed Insignificant Activity/Emission Point Reference No. LD-1)

The facility performs the debarking operation within a building, therefore the debarker is a totally enclosed unit except for the log inlet and outlet. To estimate the emissions for debarking, Two Rivers Lumber proposes using log throughput and the Texas Commission on Environmental Quality Wood Industry Emission Factors document for PM, and PM10, provided as Appendix A1. As indicated within this document for "Log Debarking (sawmills)", we use the emission factors provided and the control efficiency for a building enclosure of "Enclosure, total". Emissions of PM2.5 are assumed to be half that of PM10. Bark from the debarker and bark hog are mechanically conveyed to the storage bins; emissions for conveyance are accounted for on the wood waste by-product storage bin section. This unit as proposed meets the criteria to be proposed as a Section 2 Trivial & Insignificant Activity.

Log Debarking Throughput:

Operating Parameters	Sawmill Throughputs	Units	Comments
Max Annual Throughput	3,153,600	ton log/yr	Annual production is based on ADEM guidance of applying the maximum hourly production rate for 8,760 hr/yr. This is not an accurate representation of the actual annual production.
Max Hourly Throughput	360	ton log/hr	Projected maximum hourly throughput through the sawmill process.

Emission Factors

Operation	Pollutant	Emission Factor	Units	Emission Factor References
Debarker	PM	0.024	lb/ton log processed	[A]TCEQ Wood Industry Pre-Control Emission Factors for Log Debarking (Appendix A1); Building Enclosure = 100% Post Control
	PM_{10}	0.0110		
	$PM_{2.5}$	0.0060		[B]$PM_{2.5}$ assumed to be 50% of PM_{10}

Requested Debarking Emissions

Pollutant	Uncontrolled Emissions		Control Efficiency[A]	Requested Permit Limits Controlled Emissions	
	lb/hr	ton/yr		lb/hr	ton/yr
PM	8.64	37.84	100%	0.00	0.00
PM_{10}	3.96	17.34	100%	0.00	0.00
$PM_{2.5}$	2.16	9.46	100%	0.00	0.00

Example Calculations

Total Hourly Debarking Emissions = hourly production (ton/hr) x emission factor (lb/ton) x (1 - building enclosure control)

Total Annual Debarking Emissions = annual production (ton/yr) x emission factor (lb/ton) x ton/2000 lb x (1 - building enclosure control)

Log Bucking (Proposed Insignificant Activity/Emission Point Reference No. LB-1)

The facility performs log bucking within an enclosed building. Log bucking involves cutting the logs to the desired length and is part of the general debarking log preparation process. To estimate the emissions for log bucking, Two Rivers Lumber proposes using log throughput and the EPA Region 10 Memo on Particulate Matter Potential to Emit Emission Factors for Activities at Sawmills, provided as Appendix A5. The Texas Commission on Environmental Quality Wood Industry Emission Factors document, provided as Appendix A1, under "Sawing", the control factors for building enclosure "Enclosed by building" were used to estimate control efficiencies for log bucking. Emissions of PM2.5 are assumed to be half that of PM10. This unit as proposed meets the criteria to qualify as Section 2 Trivial & Insignificant Activity.

Log Bucking Throughput:

Operating Parameters	Sawmill Throughputs	Units	Comments
Max Annual Throughput	3,153,600	ton log/yr	Annual production is based on ADEM guidance of applying the maximum hourly production rate for 8,760 hr/yr. This is not an accurate representation of the actual annual production.
Max Hourly Throughput	360	ton log/hr	Projected maximum hourly throughput through the sawmill process.

Emission Factors

Operation	Pollutant	Emission Factor	Units	Emission Factor Reference
Log Bucking	PM	0.035	lb/ton log processed	EPA Region 10 Sawmill Memo Pre-Control Emission Factors (Appendix A5).
	PM_{10}	0.0175		
	$PM_{2.5}$	0.00875		$PM_{2.5}$ assumed to be 50% of PM_{10}

Log Bucking Emissions

Pollutant	Uncontrolled Emissions		Building Control Efficiency[A]	Requested Permit Limits Controlled Emissions	
	lb/hr	ton/yr[B]		lb/hr	ton/yr[B]
TSP or PM	12.60	55.19	90%	1.26	5.52
PM_{10}	6.30	27.59	90%	0.63	2.76
$PM_{2.5}$	3.15	13.80	90%	0.32	1.38

Notes:

[A] TCEQ Wood Industry Post Control Factors for Log Sawing (Appendix A1); Enclosed by Building = 90% Post-Control

[B] Annual emissions are based on an annual production that is based on ADEM guidance of applying the maximum hourly production rate for 8,760 hr/yr. The calculated annual emissions are not an accurate representation of the actual emissions.

Example Calculations

Total Hourly Bucking Emissions = hourly production (ton/hr) x emission factor (lb/ton) x (1 - building enclosure control)

Total Annual Bucking Emissions = annual production (ton/yr) x emission factor (lb/ton) x ton/2000 lb x (1 - building enclosure control)

Hogging and Chipping (Proposed Insignificant Activities/Emission Point Reference No. BH-1 Bark Hog, No. SC-1 Sawmill Chipper)

The facility performs the hogging and chipping operations within partially enclosed buildings. To estimate the emissions for hogging and chipping, Two Rivers Lumber proposes using log throughput and the Texas Commission on Environmental Quality Wood Industry Emission Factors document for PM and PM_{10}, provided as Appendix A1. As indicated within this document for "Chipping Operation", we use the emission factors provided and control from "Partial Enclosure". Emissions of $PM_{2.5}$ are assumed to be half that of PM_{10}. Bark from the bark hog and chips from the chipper are mechanically conveyed to the storage bins, whereas planer hog shavings are pneumatically conveyed from the Planer Mill to the cyclofilter then the large shavings are mechanically conveyed to the storage bin. Emissions from the Planer Hog are routed through the cyclofilter and are accounted for in the planer mill emissions section. Emissions for all other conveyance operations are accounted on the wood waste by-product storage bin section. As proposed, the bark hog and sawmill chipper meet the criteria to be requested as Section 2 Trivial & Insignificant Activities.

Material Hogging/Chipping Throughput

Emission Point Reference No.	Process Description	Hourly Material Throughput ton/hr	Annual Material Throughput[1] ton/yr	Comments
BH-1	Bark Hog	36	315,360	Emissions controlled by partial building enclosure
SC-1	Sawmill Chipper	70	613,200	Emissions controlled by partial building enclosure
PM-1	Planer Hog	4	30,660	Emissions controlled by Cyclofilter. See Planer Mill calculations.

Notes

[1] Annual production is based on ADEM guidance of applying the maximum hourly production rate for 8,760 hr/yr. This is not an accurate representation of the actual annual production.

Emission Factors

Operation	Pollutant	Emission Factor	Units	Emission Factor Reference
Hogging/ Chipping	PM	0.024	lb/ton log	[A] TCEQ Wood Industry Pre-Control Emission Factors for Chipping Operations (Appendix A1); Partial Enclosure = 95% Post Control
	PM_{10}	0.0110		
	$PM_{2.5}$	0.0055		[B] $PM_{2.5}$ assumed to be 50% of PM_{10}

Material Hogging/Chipping Emissions

Emission Point Reference No.	Process Description	Pollutant	Uncontrolled Emissions lb/hr	Uncontrolled Emissions ton/yr[C]	Control Partial Building Enclosure[A]	Requested Permit Limits Controlled Emissions lb/hr	Requested Permit Limits Controlled Emissions ton/yr[C]
BH-1	Bark Hog	PM	0.86	3.78	95%	0.04	0.19
		PM_{10}	0.40	1.73	95%	0.02	0.09
		$PM_{2.5}$	0.20	0.87	95%	0.01	0.04
SC-1	Sawmill Chipper	PM	1.68	7.36	95%	0.08	0.37
		PM_{10}	0.77	3.37	95%	0.04	0.17
		$PM_{2.5}$	0.39	1.69	95%	0.02	0.08

Notes:

[C] Annual emissions are based on an annual production that is based on ADEM guidance of applying the maximum hourly production rate for 8,760 hr/yr. The calculated annual emissions are not an accurate representation of the actual emissions.

Example Calculations

Total Hourly PM Emissions = Hourly Material Throughput (ton/hr) x PM Emission Factor (lb/ton) x (1 - Partial Building Enclosure Control)

Total Annual PM Emissions = Annual Material Throughput (ton/yr) x PM Emission Factor (lb/ton) x ton/2000 lb x (1 - Partial Building Enclosure Control)

Sawmill (Emission Point Reference No. SM-1)

The facility performs sawing within a building. The saws within the sawmill are individually totally enclosed except for log inlet and outlet. To estimate the emissions for the sawmill, Two Rivers Lumber proposes using log throughput and the Texas Commission on Environmental Quality Wood Industry Emission Factors document for PM and PM10, provided as Appendix A1. As indicated within this document for "Sawing (cross-cut/rip saws)", we use the emission factors provided and control from building enclosure "Enclosed by Building". Emissions of PM2.5 are assumed to be half that of PM10. Sawdust from the sawmill is mechanically conveyed to the sawdust storage bin; emissions for conveyance are accounted for on the wood waste by-product storage bin section.

Sawmill Throughput

Operating Parameters	Sawmill Throughputs	Units	Comments
Max Annual Log Throughput	3,153,600	ton log/yr	Annual production is based on ADEM guidance of applying the maximum hourly production rate for 8,760 hr/yr. This is not an accurate representation of the actual annual production.
Max Hourly Log Throughput	360	ton log/hr	Projected maximum hourly throughput through the sawmill process.
Max Annual Sawdust and Chip Throughput	360,000	ton log/yr	Projected maximum annual throughput through the sawmill process.
Max Hourly Sawdust and Chip Throughput	41.10	ton log/hr	Projected maximum hourly throughput through the sawmill process.

Emission Factors

Operation	Pollutant	Emission Factor	Units	Emission Factor Reference
Sawmill	PM	0.35	lb/ton log processed	[A] TCEQ Wood Industry Pre-Control Emission Factors for Log Sawing (Appendix A1); Enclosed by Building = 90% Post-Control
	PM_{10}	0.20		
	$PM_{2.5}$	0.10		[B] $PM_{2.5}$ assumed to be 50% of PM_{10}

Sawmill Emissions

Pollutant	Uncontrolled Emissions		Building Control Efficiency[A]	Requested Permit Limits Controlled Emissions	
	lb/hr	ton/yr[C]		lb/hr	ton/yr[C]
PM	126.00	551.88	90%	12.60	55.19
PM_{10}	72.00	315.36	90%	7.20	31.54
$PM_{2.5}$	36.00	157.68	90%	3.60	15.77

Notes:

[C] Annual emissions are based on an annual production that is based on ADEM guidance of applying the maximum hourly production rate for 8,760 hr/yr. The calculated annual emissions are not an accurate representation of the actual emissions.

Example Calculations

Total Hourly Sawing Emissions = 'hourly production (ton/hr) x emission factor (lb/ton) x (1 - building enclosure control)
Total Annual Sawing Emissions = 'annual production (ton/yr) x emission factor (lb/ton) x ton/2000 lb x (1 - building enclosure control)

Lumber Drying Kilns: (Emission Point Reference No. DPK-1 & DPK-2)

From the Sawmill, the green lumber is stacked and stored. The lumber is then dried in one of the two kilns. The kilns utilize heat from natural gas burners on each kiln. Emissions from the kilns include lumber drying as well as natural gas combustion where appropriate. The emission factor sources are indicated below and included in the appendices as referenced.

Throughput of kilns are listed below:

Emission Point Reference No.	Description	Hourly Natural Gas Usage (MCF/hr)[1]	Hourly Natural Gas Usage[1] (MMBtu/hr)	Hourly Production[2] (MBF/hr)	Hourly Production (ton/hr)	Annual Total Production[3] (MBF/yr)
DPK-1	Dual Path Kiln No. 1	38	38.76	15.4	34.7	134,904
DPK-2	Dual Path Kiln No. 2	38	38.76	15.4	34.7	134,904

Requested Kiln Emissions

Emission Source	Pollutant	Factor	Units	Requested Permit Limits				Factor Reference
				DPK No. 1 (lb/hr)	DPK No. 1[3] (tpy)	DPK No. 2 (lb/hr)	DPK No. 2[3] (tpy)	
Softwood Lumber Drying	VOC as C	3.80	lb/MBF	58.52	256.32	58.52	256.32	Appendix A4- ADEQ Lumber Kiln Memo, dated October 31, 2014
	VOC (WPP1)	4.74	lb/MBF	73.04	319.92	73.04	319.92	WPP1 VOC is an acronym for Wood Products Protocol 1 VOC and is calculated using the following eqn: [VOC as C x 1.225 + (1-0.65) x Methanol + Formaldehyde].
	Methanol	0.199	lb/MBF	3.06	13.42	3.06	13.42	Appendix A3- NCDENR Wood Kiln Emission Calculator Factor Sheet for Softwood Steam Heated
	Phenol	0.01	lb/MBF	0.15	0.67	0.15	0.67	
	Formaldehyde	0.0183	lb/MBF	0.28	1.23	0.28	1.23	
	Acetaldehyde	0.052	lb/MBF	0.80	3.51	0.80	3.51	
	Acrolein	0.0075	lb/MBF	0.12	0.51	0.12	0.51	
	PM total	0.022	lb/MBF	0.34	1.48	0.34	1.48	
	PM_{10}	0.022	lb/MBF	0.34	1.48	0.34	1.48	Appendix A3- Assumed same as PM
	$PM_{2.5}$	0.011	lb/MBF	0.17	0.74	0.17	0.74	Appendix A3- Assumed 50% of PM_{10}
Natural Gas Combustion	PM total	7.6	lb/MMscf	2.89E-01	1.26E+00	2.89E-01	1.26E+00	Appendix A6- AP42 Table 1.4-2 (7/98)
	PM_{10}	7.6	lb/MMscf	2.89E-01	1.26E+00	2.89E-01	1.26E+00	Appendix A6- AP42 Table 1.4-2 (7/98)
	$PM_{2.5}$	7.6	lb/MMscf	2.89E-01	1.26E+00	2.89E-01	1.26E+00	Appendix A6- AP42 Table 1.4-2 (7/98)
	SO_2	0.6	lb/MMscf	2.28E-02	9.99E-02	2.28E-02	9.99E-02	Appendix A6- AP42 Table 1.4-2 (7/98)
	CO	84	lb/MMscf	3.19E+00	1.40E+01	3.19E+00	1.40E+01	Appendix A6- AP42 Table 1.4-1 (7/98)
	NO_x	50	lb/MMscf	1.90E+00	8.32E+00	1.90E+00	8.32E+00	Appendix A6- AP42 Table 1.4-1 (7/98) Low NOx burner
	Lead	5.00E-04	lb/MMscf	1.90E-05	8.32E-05	1.90E-05	8.32E-05	Appendix A6- AP42 Table 1.4-2 (7/98)
	Benzene	2.10E-03	lb/MMscf	7.98E-05	3.50E-04	7.98E-05	3.50E-04	Appendix A6- AP42 Table 1.4-3 (7/98)
	Formaldehyde	7.50E-02	lb/MMscf	2.85E-03	1.25E-02	2.85E-03	1.25E-02	Appendix A6- AP42 Table 1.4-3 (7/98)
	Dichlorobenzene	1.20E-03	lb/MMscf	4.56E-05	2.00E-04	4.56E-05	2.00E-04	Appendix A6- AP42 Table 1.4-3 (7/98)
	Hexane	1.80E+00	lb/MMscf	6.84E-02	3.00E-01	6.84E-02	3.00E-01	Appendix A6- AP42 Table 1.4-3 (7/98)
	Naphthalene	6.10E-04	lb/MMscf	2.32E-05	1.02E-04	2.32E-05	1.02E-04	Appendix A6- AP42 Table 1.4-3 (7/98)
	Toluene	3.40E-03	lb/MMscf	1.29E-04	5.66E-04	1.29E-04	5.66E-04	Appendix A6- AP42 Table 1.4-3 (7/98)
	Arsenic	2.00E-04	lb/MMscf	7.60E-06	3.33E-05	7.60E-06	3.33E-05	Appendix A6- AP42 Table 1.4-4 (7/98)
	Beryllium	1.20E-05	lb/MMscf	4.56E-07	2.00E-06	4.56E-07	2.00E-06	Appendix A6- AP42 Table 1.4-4 (7/98)
	Cadmium	1.10E-03	lb/MMscf	4.18E-05	1.83E-04	4.18E-05	1.83E-04	Appendix A6- AP42 Table 1.4-4 (7/98)
	Chromium	1.40E-03	lb/MMscf	5.32E-05	2.33E-04	5.32E-05	2.33E-04	Appendix A6- AP42 Table 1.4-4 (7/98)
	Cobalt	8.40E-05	lb/MMscf	3.19E-06	1.40E-05	3.19E-06	1.40E-05	Appendix A6- AP42 Table 1.4-4 (7/98)
	Manganese	3.80E-04	lb/MMscf	1.44E-05	6.32E-05	1.44E-05	6.32E-05	Appendix A6- AP42 Table 1.4-4 (7/98)
	Mercury	2.60E-04	lb/MMscf	9.88E-06	4.33E-05	9.88E-06	4.33E-05	Appendix A6- AP42 Table 1.4-4 (7/98)
	Nickel	2.10E-03	lb/MMscf	7.98E-05	3.50E-04	7.98E-05	3.50E-04	Appendix A6- AP42 Table 1.4-4 (7/98)
	Selenium	2.40E-05	lb/MMscf	9.12E-07	3.99E-06	9.12E-07	3.99E-06	Appendix A6- AP42 Table 1.4-4 (7/98)
	POM	8.82E-05	lb/MMscf	3.35E-06	1.47E-05	3.35E-06	1.47E-05	Appendix A6- AP42 Table 1.4-3 (7/98)
Total Emissions[4,5]	PM total[4,5]	--	--	1.26	5.50	1.26	5.50	Total emissions from fuel combustion and lumber drying
	PM_{10}[4,5]	--	--	1.26	5.50	1.26	5.50	Total emissions from fuel combustion and lumber drying
	$PM_{2.5}$[4,5]	--	--	0.92	4.01	0.92	4.01	Total emissions from fuel combustion and lumber drying
	SO_2	--	--	0.02	0.10	0.02	0.10	Emissions from fuel combustion
	VOC as C	--	--	58.52	256.32	58.52	256.32	Total emissions are conservatively based on direct fired kiln emissions that take into account from fuel combustion and lumber drying.
	VOC (WPP1)	--	--	73.04	319.92	73.04	319.92	WPP1 VOC is an acronym for Wood Products Protocol 1 VOC and is calculated using the following eqn: [VOC as C x 1.225 + (1-0.65) x Methanol + Formaldehyde].
	CO	--	--	3.19	13.98	3.19	13.98	Emissions from fuel combustion
	NO_x	--	--	1.90	8.32	1.90	8.32	Emissions from fuel combustion
	Lead	--	--	1.900E-05	8.322E-05	1.900E-05	8.322E-05	Emissions from fuel combustion
	Methanol	--	--	3.065E+00	1.342E+01	3.065E+00	1.342E+01	Emissions from lumber drying
	Phenol	--	--	1.540E-01	6.745E-01	1.540E-01	6.745E-01	Emissions from lumber drying
	Acetaldehyde	--	--	8.008E-01	3.508E+00	8.008E-01	3.508E+00	Emissions from lumber drying
	Acrolein	--	--	1.155E-01	5.059E-01	1.155E-01	5.059E-01	Emissions from lumber drying
	Benzene	--	--	7.980E-05	3.495E-04	7.980E-05	3.495E-04	Emissions from fuel combustion
	Formaldehyde	--	--	2.847E-01	1.247E+00	2.847E-01	1.247E+00	Total emissions from fuel combustion and lumber drying
	Dichlorobenzene	--	--	4.560E-05	1.997E-04	4.560E-05	1.997E-04	Emissions from fuel combustion
	Hexane	--	--	6.840E-02	2.996E-01	6.840E-02	2.996E-01	Emissions from fuel combustion
	Naphthalene	--	--	2.318E-05	1.015E-04	2.318E-05	1.015E-04	Emissions from fuel combustion
	Toluene	--	--	1.292E-04	5.659E-04	1.292E-04	5.659E-04	Emissions from fuel combustion
	Arsenic	--	--	7.600E-06	3.329E-05	7.600E-06	3.329E-05	Emissions from fuel combustion
	Beryllium	--	--	4.560E-07	1.997E-06	4.560E-07	1.997E-06	Emissions from fuel combustion
	Cadmium	--	--	4.180E-05	1.831E-04	4.180E-05	1.831E-04	Emissions from fuel combustion
	Chromium	--	--	5.320E-05	2.330E-04	5.320E-05	2.330E-04	Emissions from fuel combustion
	Cobalt	--	--	3.192E-06	1.398E-05	3.192E-06	1.398E-05	Emissions from fuel combustion
	Manganese	--	--	1.444E-05	6.325E-05	1.444E-05	6.325E-05	Emissions from fuel combustion
	Mercury	--	--	9.880E-06	4.327E-05	9.880E-06	4.327E-05	Emissions from fuel combustion
	Nickel	--	--	7.980E-05	3.495E-04	7.980E-05	3.495E-04	Emissions from fuel combustion
	Selenium	--	--	9.120E-07	3.995E-06	9.120E-07	3.995E-06	Emissions from fuel combustion
	POM	--	--	3.352E-06	1.468E-05	3.352E-06	1.468E-05	Emissions from fuel combustion
	Total HAPs	--	--	4.488E+00	1.966E+01	4.488E+00	1.966E+01	Total emissions from fuel combustion and lumber drying

Notes:

[1] Hourly natural gas usage is conservatively based on the design rating of each kiln's burner. Converted to MMBtu/hr using 1 MMscf = 1,020 MMBtu.

[2] Hourly production based on kiln design capacity assuming product mix with greatest possible hourly production rate.

[3] Annual emissions are based on an annual production that is based on ADEM guidance of applying the maximum hourly production rate for 8,760 hr/yr. The calculated annual emissions are not an accurate representation of the actual emissions.

[4] Total requested particulate emission permit limits have been multiplied by a 200% safety factor.

[5] Emission factors for wood-fired kilns overestimate emissions expected from the facility's kilns. For this reason, emissions were calculated for softwood lumber drying and natural gas combustion with the results summed.

Lumber Drying Example Calculations

Total Hourly Kiln Emissions = Hourly Production (MBF/hr) x Emission Factor (lb/MBF)

Total Annual Combined Kiln Emissions = Annual Total Production (MBF/yr) x Emission Factor (lb/MBF) x ton/2000 lb

Natural Gas Combustion Example Calculations

Total Hourly Kiln Emissions = Sum of Natural Gas Usage for both kilns (MMBtu/hr) / 1,020 (MMBtu/MMscf) x Emission Factor (lb/MMscf)

Total Annual Combined Kiln Emissions = Hourly Emissions for both kilns (lb/hr) x 8,760 (hrs/yr) x ton/2000 lb

Pollutant Contribution From Both Drying and Fuel Combustion Example Calculations

Total Hourly Kiln Emissions = summation of natural gas combustion and lumber drying emissions

Total Annual Combined Kiln Emissions = summation of natural gas combustion and lumber drying emissions for all kilns

Lumber Drying Kilns Condensate Evaporators: (Emission Point Reference No. CE-1 & CE-2)

The lumber drying kiln condensate evaporators are proposed to prevent kiln condensate from being discharged to waters of the state to adhere to the general stormwater permit. The VOC concentration in the condensate is estimated at 72.1 mg/m3 at a flow of 9.3 gallons per minute. Therefore, the emissions from the condensate evaporate are assumed to be minimal.

Throughput of evaporators are listed below:

Emission Point Reference No.	Description	Hourly Natural Gas Usage (MCF/hr)[1]	Hourly Heat Capacity (MMBtu/hr)	Hourly Production[2] (MBF/hr)	Annual Total Production[2] (MBF/yr)	Hourly Condensate Production[3] (gal/hr)	Annual Condensate Production[4] (gal/yr)
CE-1	Condensate Evaporator No. 1	3.922	4.000	15.4	134,904	279	2,444,040
CE-2	Condensate Evaporator No. 2	3.922	4.000	15.4	134,904	279	2,444,040

Note:

[1] Hourly natural gas usage is conservatively based on the design rating of each kiln's burner. Converted to MMBtu/hr using 1 MMscf = 1,020 MMBtu.

[2] The condensate production is based on the hourly and annual production capacity of the dual path kilns.

[3] Hourly production based on estimated condensate from the kiln at maximum production capacity.

[4] Annual production is based the maximum hourly production rate for 8,760 hr/yr.

Evaporator Emissions

Emission Source	Pollutant	Factor	Units	Estimated Emissions				Factor Reference
				Evaporator No. 1 (lb/hr)	Evaporator No. 1 (tpy)	Evaporator No. 2 (lb/hr)	Evaporator No. 2 (tpy)	
Natural Gas Combustion	PM total	7.6	lb/MMscf	2.98E-02	1.31E-01	2.98E-02	1.31E-01	Appendix A6- AP42 Table 1.4-2 (7/98)
	PM_{10}	7.6	lb/MMscf	2.98E-02	1.31E-01	2.98E-02	1.31E-01	PM10 is assumed equal to PM
	$PM_{2.5}$	7.6	lb/MMscf	2.98E-02	1.31E-01	2.98E-02	1.31E-01	PM2.5 is assumed equal to PM
	SO_2	0.6	lb/MMscf	2.35E-03	1.03E-02	2.35E-03	1.03E-02	Appendix A6- AP42 Table 1.4-2 (7/98)
	CO	84	lb/MMscf	3.29E-01	1.44E+00	3.29E-01	1.44E+00	Appendix A6- AP42 Table 1.4-1 (7/98)
	NO_x	100	lb/MMscf	3.92E-01	1.72E+00	3.92E-01	1.72E+00	Appendix A6- AP42 Table 1.4-1 (7/98)
	Lead	0.0005	lb/MMscf	1.96E-06	8.59E-06	1.96E-06	8.59E-06	Appendix A6- AP42 Table 1.4-2 (7/98)
	Methanol	2.3	lb/MMscf	9.02E-03	3.95E-02	9.02E-03	3.95E-02	Appendix A6- AP42 Table 1.4-2 (7/98)
	VOC as C	5.5	lb/MMscf	2.16E-02	9.45E-02	2.16E-02	9.45E-02	Appendix A6- AP42 Table 1.4-2 (7/98)
	Benzene	2.10E-03	lb/MMscf	8.24E-06	3.61E-05	8.24E-06	3.61E-05	Appendix A6- AP42 Table 1.4-3 (7/98)
	Formaldehyde	7.50E-02	lb/MMscf	2.94E-04	1.29E-03	2.94E-04	1.29E-03	Appendix A6- AP42 Table 1.4-3 (7/98)
	Dichlorobenzene	1.20E-03	lb/MMscf	4.71E-06	2.06E-05	4.71E-06	2.06E-05	Appendix A6- AP42 Table 1.4-3 (7/98)
	Hexane	1.80E+00	lb/MMscf	7.06E-03	3.09E-02	7.06E-03	3.09E-02	Appendix A6- AP42 Table 1.4-3 (7/98)
	Naphthalene	6.10E-04	lb/MMscf	2.39E-06	1.05E-05	2.39E-06	1.05E-05	Appendix A6- AP42 Table 1.4-3 (7/98)
	Toluene	3.40E-03	lb/MMscf	1.33E-05	5.84E-05	1.33E-05	5.84E-05	Appendix A6- AP42 Table 1.4-3 (7/98)
	Arsenic	2.00E-04	lb/MMscf	7.84E-07	3.44E-06	7.84E-07	3.44E-06	Appendix A6- AP42 Table 1.4-4 (7/98)
	Beryllium	1.20E-05	lb/MMscf	4.71E-08	2.06E-07	4.71E-08	2.06E-07	Appendix A6- AP42 Table 1.4-4 (7/98)
	Cadmium	1.10E-03	lb/MMscf	4.31E-06	1.89E-05	4.31E-06	1.89E-05	Appendix A6- AP42 Table 1.4-4 (7/98)
	Chromium	1.40E-03	lb/MMscf	5.49E-06	2.40E-05	5.49E-06	2.40E-05	Appendix A6- AP42 Table 1.4-4 (7/98)
	Cobalt	8.40E-05	lb/MMscf	3.29E-07	1.44E-06	3.29E-07	1.44E-06	Appendix A6- AP42 Table 1.4-4 (7/98)
	Manganese	3.80E-04	lb/MMscf	1.49E-06	6.53E-06	1.49E-06	6.53E-06	Appendix A6- AP42 Table 1.4-4 (7/98)
	Mercury	2.60E-04	lb/MMscf	1.02E-06	4.47E-06	1.02E-06	4.47E-06	Appendix A6- AP42 Table 1.4-4 (7/98)
	Nickel	2.10E-03	lb/MMscf	8.24E-06	3.61E-05	8.24E-06	3.61E-05	Appendix A6- AP42 Table 1.4-4 (7/98)
	Selenium	2.40E-05	lb/MMscf	9.41E-08	4.12E-07	9.41E-08	4.12E-07	Appendix A6- AP42 Table 1.4-4 (7/98)
	POM	8.82E-05	lb/MMscf	3.46E-07	1.51E-06	3.46E-07	1.51E-06	Appendix A6- AP42 Table 1.4-3 (7/98)
Kiln Condensate Evaporation	VOC as C	6.01745E-07	lb/gal	1.68E-04	7.35E-04	0.00017	7.35E-04	Based on the maximum total VOC concentration of 72.1 mg/m^3 from a peer reviewed analytical report of kiln condensate from pine lumber (see Appendix A7) and the site specific estimated condensate produced from the lumber drying kilns of 9.3 gpm.
	PM	1.68589E-05	lb/gal	4.70E-03	2.06E-02	4.70E-03	2.06E-02	Based on the maximum TDS concentration of 2020 mg/l in a yellow southern pine kiln condensate pollutant profile from similar facilities (see Appendix A7) and the site specific estimated condensate produced from the lumber drying kilns of 9.3 gpm.
	PM_{10}	1.68589E-05	lb/gal	4.70E-03	2.06E-02	4.70E-03	2.06E-02	Based on the maximum TDS concentration of 2020 mg/l in a yellow southern pine kiln condensate pollutant profile from similar facilities (see Appendix A7) and the site specific estimated condensate produced from the lumber drying kilns of 9.3 gpm. Assumed equal to PM.
	$PM_{2.5}$	1.68589E-05	lb/gal	4.70E-03	2.06E-02	4.70E-03	2.06E-02	Based on the maximum TDS concentration of 2020 mg/l in a yellow southern pine kiln condensate pollutant profile from similar facilities (see Appendix A7) and the site specific estimated condensate produced from the lumber drying kilns of 9.3 gpm. Assumed equal to PM.

Requested Permit Limits

Emission Source	Pollutant	Hourly Emissions Evaporator No. 1 (lb/hr)	Annual Emissions Evaporator No. 1 (tpy)	Hourly Emissions Evaporator No. 2 (lb/hr)	Annual Emissions Evaporator No. 2 (tpy)
Total Evaporator emissions[1]	PM[1]	6.90E-02	3.02E-01	6.90E-02	3.02E-01
	PM_{10}[1]	6.90E-02	3.02E-01	6.90E-02	3.02E-01
	$PM_{2.5}$[1]	6.90E-02	3.02E-01	6.90E-02	3.02E-01
	SO_2	2.35E-03	1.03E-02	2.35E-03	1.03E-02
	CO	3.29E-01	1.44E+00	3.29E-01	1.44E+00
	NO_x	3.92E-01	1.72E+00	3.92E-01	1.72E+00
	Lead	1.96E-06	8.59E-06	1.96E-06	8.59E-06
	Methanol	9.02E-03	3.95E-02	9.02E-03	3.95E-02
	VOC as C	2.17E-02	9.52E-02	2.17E-02	9.52E-02
	Benzene	8.24E-06	3.61E-05	8.24E-06	3.61E-05
	Formaldehyde	2.94E-04	1.29E-03	2.94E-04	1.29E-03
	Dichlorobenzene	4.71E-06	2.06E-05	4.71E-06	2.06E-05
	Hexane	7.06E-03	3.09E-02	7.06E-03	3.09E-02
	Naphthalene	2.39E-06	1.05E-05	2.39E-06	1.05E-05
	Toluene	1.33E-05	5.84E-05	1.33E-05	5.84E-05
	Arsenic	7.84E-07	3.44E-06	7.84E-07	3.44E-06
	Beryllium	4.71E-08	2.06E-07	4.71E-08	2.06E-07
	Cadmium	4.31E-06	1.89E-05	4.31E-06	1.89E-05
	Chromium	5.49E-06	2.40E-05	5.49E-06	2.40E-05
	Cobalt	3.29E-07	1.44E-06	3.29E-07	1.44E-06
	Manganese	1.49E-06	6.53E-06	1.49E-06	6.53E-06
	Mercury	1.02E-06	4.47E-06	1.02E-06	4.47E-06
	Nickel	8.24E-06	3.61E-05	8.24E-06	3.61E-05
	Selenium	9.41E-08	4.12E-07	9.41E-08	4.12E-07
	POM	3.46E-07	1.51E-06	3.46E-07	1.51E-06
	Total HAPs	3.816E-02	1.671E-01	3.816E-02	1.671E-01

Note:

[1] Total requested particulate emission permit limits have been multiplied by a 200% safety factor.

Natural Gas Combustion Example Calculations

Total Hourly Emissions = Sum of Natural Gas Usage for both evaporators (MMscf/hr) x Emission Factor (lb/MMscf)
Total Annual Emissions = Hourly Emissions for both evaporators (lb/hr) x 8,760 (hrs/yr) x ton/2000 lb

Evaporator Emission Example Calculations

Total Hourly Emissions = Sum of kiln condensate produced (9.3 gpm) * 60 min/hr * Pollutant concentration in condensate (mg/m^3) * conversion factor (8.3454e-9 lb/gal / mg/m^3)
Total Annual Emissions = Hourly Emissions for both evaporators (lb/hr) x 8,760 (hrs/yr) x ton/2000 lb

Planer Mill (Emission Point Reference No. PM-1)

The rough, dry lumber is finished in the planer mill building or sent to the lumber storage/shipping area. Planer shavings and hogged planer trim are pneumatically conveyed from the Planer Mill through an air seal into the Cyclofilter. The large particles then are dropped out and mechanically conveyed to the shavings storage bin. Emissions for all other conveyance operations are accounted on the wood waste by-product storage bin section.

Planer Mill Throughput

Operating Parameters	Planer Mill Throughputs	Units	Comments
Max Hourly Planer Production	106	tons lumber/hr	Projected maximum hourly throughput through the Planer Mill.
Max Annual Planer Production	620,558	tons lumber/yr	Annual production is based on the design capacity of the dual path kilns. Due to the planer mill only processing dried lumber, the dual path kiln becomes the bottleneck and therefore limits the maximum capacity of the planer mill to the design capacity of the dual path kilns. However, this is not an accurate representation of the actual annual production.
Max Annual Planer Production	269,808	MBF/yr	Annual planer mill production is based on the design capacity of the dual path kilns. The standard conversion from board feet to tonnage is 2.3 tons/MBF. The calculated emissions are based on a lumber tonage throughput, however, the compliance tracking is proposed to be based on the amount of lumber sold in board footage (BF) as that is the industry standard for tracking finished lumber.
Max Hourly Shavings Production	14.4	tons shavings/hr	Projected maximum annual throughput through the Planer Mill.
Max Annual Shavings Production	48,565	tons shavings/yr	Due to the planer mill only processing dried lumber, the dual path kiln becomes the bottleneck and therefore limits the maximum capacity of the planer mill to the design capacity of the dual path kilns. Therefore, annual shavings production is based on the design capacity of the dual path kilns. However, this is not an accurate representation of the actual annual production.

Uncontrolled Emission Calculations

Uncontrolled Emission Factors

Operation	Pollutant	Emission Factor	Units	Factor Reference
Planing, Trimming and Hogging within the Planer Mill	PM	2.25	lb/ton	[A] TCEQ Wood Industry Pre-Control Emission Factors for Planing (Appendix A1)
	PM_{10}	0.90	lb/ton	
	$PM_{2.5}$	0.45	lb/ton	[B] $PM_{2.5}$ assumed to be 50% of PM_{10}

Uncontrolled Emissions

Pollutant	Uncontrolled Emissions	
	lb/hr	ton/yr[1]
PM generated from Planer Mill	239	1,049
PM_{10} generated from Planer Mill	96	419
$PM_{2.5}$ generated from Planer Mill	48	210

Controlled Emission Calculations

Control Efficiency Factors

Control Device	Pollutant	Control Efficiency	Factor Reference
Cyclofilter	PM	99.99%	Vendor guarantee (Appendix B)

Planer Mill Emissions

Operation	Pollutant	Requested Permit Limits Controlled Emissions		Comments
		lb/hr[1]	ton/yr[1,2]	
Planer Mill	PM	0.0480	0.2097	Vendor guarantee
	PM_{10}	0.0478	0.2087	Vendor guarantee for PM and ODEQ PM_{10} speciation factor for baghouses of 99.5%, Appendix A2
	$PM_{2.5}$	0.0475	0.2076	Vendor guarantee for PM and ODEQ $PM_{2.5}$ speciation factor for baghouses of 99%, Appendix A2

Note:

[1] Total requested permit limits have been multiplied by a 200% safety factor.

[2] Annual emissions are based on an annual design capacity of the dual path kilns based on ADEM guidance of applying the maximum hourly production rate for 8,760 hr/yr. The calculated annual emissions are not an accurate representation of the actual emissions.

Example Calculations:

Hourly PM Emissions = Max PM Loading to Cyclofilter (lb PM/ton) * Maximum Planer Production (ton/hr) * (1 - Cyclofilter Efficiency, 99.99%) * (200% safety factor)

Annual PM Emissions = Max PM Loading to Cyclofilter (lb PM/ton) * Maximum Planer Production (ton/yr) * (1 - Cyclofilter Efficiency, 99.99%) * (200% safety factor)

Wood Waste By-Product Storage Bins (Emission Point Reference No. CSB-1, BSB-1, SDSB-1, SSB-1)

Emissions are generated by the collection of byproducts from the debarker, sawmill, and planer mill into storage bins and from loading of byproducts into vehicles for shipping off site. Emissions are estimated using emission factors from EPA Region 10 emission factors for PM, PM10, and PM2.5, provided as Appendix A5. As these emission factors are on a bonedry basis, corrections for moisture content are included below. The chips, bark, and sawdust are considered wet while shavings from the planer mill are considered dry. As conveyance of the byproducts is by belt within an enclosed tube, emissions are generated by the dropping the material into the bins and then dropping into the vehicle for shipping.

Equipment	Emission Point Reference No.	Hourly Throughput (tons/hr)	Annual Throughput (tons/yr)[1]	Moisture Content	Hourly Throughput (BDT/hr)[2]	Annual Throughput (BDT/yr)[2]
Wet Woodwaste						
Chip Storage Bin	CSB-1	120	1,051,200	51%	59	515,088
Bark Storage Bin	BSB-1	36	315,360	51%	18	154,526
Sawdust Storage Bin	SDSB-1	24	210,240	51%	12	103,018
Dry Woodwaste						
Shavings Storage Bin	SSB-1	6	48,565	15%	5	41,281

Operating Hours for hourly estimate	8,760	hr/yr
Wet Material Drop points	2	per material
Dry Material Drop points	2	per material

Emission Factors

Pollutant	Wet Material Conveyance Drop Emission Factor	Dry Material Conveyance Drop Emission Factor	Unit	Factor Reference
PM	0.00075	0.0015	lb/bdt material	Appendix A5- EPA Region 10 Particulate Matter Potential to Emit Emission Factors for Activities at Sawmills, Excluding Boilers, Located in Pacific Northwest Indian Country, May 2014.
PM_{10}	0.00035	0.0007	lb/bdt material	
$PM_{2.5}$	0.00005	0.0001	lb/bdt material	

Requested Permit Limits

Equipment	PM		PM10		PM2.5	
	lb/hr	tpy[1]	lb/hr	tpy[1]	lb/hr	tpy[1]
CSB-1	0.088	0.386	0.041	0.180	0.006	0.026
BSB-1	0.026	0.116	0.012	0.054	0.002	0.008
SDSB-1	0.018	0.077	0.008	0.036	0.001	0.005
SSB-1	0.014	0.062	0.007	0.029	0.001	0.004

Example Calculations

Hourly Emissions = hourly throughput (BDT/hr) x emission factor (lb/BDT) x drop points

Annual Emissions = annual throughput (BDT/hr) x emission factor (lb/BDT) x drop points / 2,000 lb/ton

Notes:

[1] Annual emissions are based on an annual production that is based on ADEM guidance of applying the maximum hourly production rate for 8,760 hr/yr. The calculated annual emissions are not an accurate representation of the actual emissions.

[2] Bone Dried Ton (BDT) assumes wet material has 51% MC and dry material has 15% MC in accordance with EPA Region 10 Memo.

Greenhouse Gas Emission Calculations:

HHV and Emission Factors

Fuel	CO_2[1] (kg CO_2/MMBtu)	CH_4[2] (kg CH_4/MMBtu)	N_2O[2] (kg N_2O/MMBtu)
Natural Gas	53.06	1.00E-03	1.00E-04

Heat Capacity of Natural Gas: 1,026 Btu/scf

Potential Heat Input

Natural Gas Sources	MCF/hr	scf/hr	MMBtu/hr	MMBtu/yr
Dual Path Kiln No. 1 (DPK-1)	38.0	38000	39.0	341534.9
Dual Path Kiln No. 2 (DPK-2)	38.0	38000	39.0	341534.9
Condensate Evaporator No. 1 (CE-1)	3.922	3921.6	4.0	35246.1
Condensate Evaporator No. 2 (CE-2)	3.922	3921.6	4.0	35246.1

GHG Emissions

Pollutant[3]	DPK-1 (ton/yr)	DPK-2 (ton/yr)	CE-1 (ton/yr)	CE-2 (ton/yr)	Total GHG Emissions (ton/yr)
CO_2	19,976	19,976	2,061	2,061	44,075
CH_4	0.38	0.38	0.04	0.04	1
CH_4 - CO_2e	9.41	9.41	0.97	0.97	21
N_2O	0.04	0.04	0.004	0.004	0
N_2O - CO_2e	11	11	1	1	25
Total CO_2e	19,997	19,997	2,064	2,064	44,120

Example Calculations

Annual Emission Rate of Pollutant (metric ton) = Annual Potential Heat Input x EF x 2.2046 lb/kg / 2000 lb/ton

CO_2e (TPY)= CO_2 + (25 x CH_4) + (298 x N_2O)

Notes:

1. CO_2 Emission Factor from Part 98 Subpart C Table C-1
2. CH_4 and N_2O Emission Factor from Part 98 Subpart C Table C-2
3. High Heat Values (HHV) from Part 98 Subpart C Table C-1

Proposed Monitoring and Recordkeeping Requirements

PROPOSED MONITORING AND RECORDKEEPING

The facility is to demonstrate compliance for all process emission estimates through recordkeeping of the lumber and byproduct materials sold offsite. Records should be updated monthly and maintained on site.

Proper maintenance and operation of all wood working equipment can effectively reduce PM emissions. Proper maintenance and operation of lumber drying kilns and condensate evaporators can effectively reduce VOC emissions. Routine maintenance should also be completed on all equipment based on manufacturer's recommendations and records of maintenance should be maintained on site at the facility.

Emission Source Description	Emission Point ID	Proposed Compliance Requirements
Sawmill	SM-1	Compliance is proposed to be demonstrated through recordkeeping of raw logs processed (3,153,600 tpy on a 12 month rolling avg. basis).
Dual Path Kiln No. 1, Dual Path Kiln No. 2	DPK-1, DPK-2	Compliance is proposed to be demonstrated through monthly recordkeeping of lumber produced (269,808 MBF/yr on a 12 month rolling avg. basis) and records of proper operation and maintenance. A maintenance and operating plan is proposed for ADEM review within 6 months of kiln startup.
Condensate Evaporator No. 1, Condensate Evaporator No. 2	CE-1, CE-2	Compliance is demonstrated by maintaining records of proper operation and maintenance. A maintenance and operating plan is proposed for ADEM review within 6 months of kiln startup.
Planer Mill	PM-1	Compliance is proposed to be demonstrated through recordkeeping of lumber produced (269,808 MBF/yr on a 12 month rolling avg. basis).
Chip Storage Bin	CSB-1	Compliance is proposed to be demonstrated through recordkeeping of chips produced (1,051,200 tpy on a 12 month rolling avg. basis).
Bark Storage Bin	BSB-1	Compliance is proposed to be demonstrated through recordkeeping of bark produced (315,360 tpy on a 12 month rolling avg. basis).
Sawdust Storage Bin	SDSB-1	Compliance is proposed to be demonstrated through recordkeeping of sawdust produced (210,240 tpy on a 12 month rolling avg. basis).
Shavings Storage Bin	SSB-1	Compliance is proposed to be demonstrated through recordkeeping of shavings produced (48,565 tpy on a 12 month rolling avg. basis).
Log Processing Debarker, Log Bucking	LD-1, LB-1	Proposed Insignificant Activities. If deemed a significant emission source, compliance is proposed to be demonstrated through recordkeeping of raw logs processed (3,153,600 tpy on a 12 month rolling avg. basis).
Bark Hog	BH-1	Proposed Insignificant Activity. If deemed a significant emission source, compliance is proposed to be demonstrated through recordkeeping of bark produced (315,360 tpy on a 12 month rolling avg. basis).
Sawmill Chipper	SC-1	Proposed Insignificant Activity. If deemed a significant emission source, compliance is proposed to be demonstrated through recordkeeping of chips produced (613,200 tpy on a 12 month rolling avg. basis).

Appendix A

Emission Factor Supporting Documentation

Appendix A1

TCEQ Wood Industries Emission Factors

Wood Industry

Emission Factors

Date: 1/12/2005

I am planning on posting this report on the NSR web site sometime in February, but I'd like your comments before I do. If you could, please review and make any comments you want. I'd appreciate it. I promise to take them in a construction manner.

Again, your help in this review will be appreciated.

Wood Industry

Emission Factors

Date: 1/12/2005

Log Debarking (sawmills): . . . . . 0.024 lb PM/ton of logs debarked (1)
. . . . . 0.011 lb PM_{10}/ton of logs debarked (11)

Controls:
- Wet storage of logs prior to debarking 95% (1)
- Hooding, vent to cyclone 80% (1)
- Hooding, vent to fabric filter 99% (1)
- Enclosure, partial 95%
- Enclosure, total 100% (1)

Log Soaking Vats (plywood): . . . . . 2.80 lbs VOC/hr for 1200 ft^2 vat (10)
Assume emissions are linear with surface area and adjust factor by ratio of 2.80/1200 to new emission rate/ surface of new vats.

Controls: . . . . . None

Sawing (cross-cut/rip saw): . . . . . 0.35 lb PM/ton logs sawed (1)
. . . . . 0.20 lb PM_{10}/ton of logs sawed (11)

Controls:
- Wet material 0%
- Hooding, vent to cyclone 80% (1)
- Hooding, vent fabric filter: outlet grain loading 0.01 gr/dscf
- Partial Enclosure 85%
- Full Enclosure 90%
- Enclosed by building 90%
- Building under negative pressure 100%

Chipping Operation: . . . . . 0.024 lb PM/ton of wood chipped (1)
(assumed to be the same as debarking) 0.011 lb PM_{10}/ton of wood chipped (11)

Controls:
- Hooding, vent to cyclone 80% (1)
- Hooding, vent to fabric filter 99% (1)
- Enclosure, partial 95%
- Enclosure, total 100% (1)

NCASI – National Council for Air And Stream Improvement.

Sawdust Pile Loading, Unloading, and Storage (sawmills): . . . . . 1.00 lb PM/ton of sawdust handled (1)
. . . . . 0.36 lb PM_{10}/ton of sawdust handled (11)

Controls: Wet suppression 50% (1)
Enclosure (silo) fabric filter 0.01 gr/dscf outlet grain loading
Enclosure (silo) cyclone 80% (1)
Telescopic tubes 75% (1)

Wood Waste Collection System (with Sanding Operations): (Controlled - Large Diameter Cyclones)
. . . . . 5.0 lb PM/ton handled (7)
. . . . . 2.4 lb PM_{10}/ton handled (11)

Wood Waste Collection System (without Sanding Operations): (Controlled - Large Diameter Cyclones)
. . . . . 2.0 lb PM/ton handled (7)
. . . . . 1.20 lb PM_{10}/ton handled (11)

Wood Waste Storage Bin Vent: . . . . . 1.00 lb PM/ton wood waste stored (1)
. . . . . 0.58 lb PM_{10}/ton wood waste stored (11)

Controls: Fabric filter . . . . . 0.01 gr/dscf outlet grain loading

Wood Waste Storage Bin Loadout: . . . . . 2.00** lb PM/ton wood waste loaded out (1)

** This factor was included in AP-42 from 7/79 until the Fifth Edition of AP-42 issued in 1/1995. The footnote said the emission factors were based on engineering judgment from plant visits prior to 1979.

Emission factors for the loadout of grain is recommended because these emissions were evaluated and reported from 1994-1997, and grain and wood waste have similar properties. Both are made of cellulose fiber. Both contain internal moisture. Wood chips will be large in size. Grain would produce more fines as it is handled. Therefore, the emission factor for loadout of grain would be more conservative than emissions from the loadout of wood waste.

. . . 0.086 lbs PM/ton of wood waste loadout (14)
. . 0.029 lbs PM_{10}/ton of wood waste loadout (14)

Controls: Fabric filter ..... 0.01 gr/dscf outlet grain loading
Telescopic tubes 75% (1)
Enclosure (3-sided) 60% (1)
Enclosure, vent to cyclone 80% (1)
Enclosure, vent to fabric filter 99% (1)

Hardboard Sander: ..... 0.03 lb PM_{10}/MSF 1/8 (2)
(Controlled - Fabric Filter)
Controls: Fabric filter ..... 0.01 gr/dscf outlet grain loading

Plywood Cutting and Sanding: ..... 0.1 lb PM_{10}/ft^2 (6)
(Uncontrolled)
Controls: Fabric filter ..... 0.01 gr/dscf outlet grain loading

Planner: ..... 2.25 lb PM/ton processed (13)
..... 0.9 lb PM_{10}/ton processed (13)

Controls: Fabric filter ..... 0.01 gr/dscf outlet grain loading
..... 99.5 % for Cyclone
..... 99.9% for baghouse

Wood Chip Stockpile (VOC): ..... Due to unavailability of emission factors or techniques, EPA Region 6 and OAQPS EPA Headquarters agree with the TCEQ position that these emissions are in the biogenics category of the air emissions inventory, and therefore, it is not necessary to regulate these emissions. This letter was received from EPA - Region 6 on February 26, 1996. When emission factors are developed, then VOC emissions from stockpiles can be estimated.

Several Sections in AP-42 under Chapter 10 - Wood Products Industry that were revised in 2002 states that both VOCs and condensible PM are primarily compounds evaporated from the wood. Quantities emitted are dependent on wood species, dryer temperature, fuel used, and other factors including season of the year, time between logging and processing, and wafer storage time.

Lumber Drying Kilns: (3)

New, reconstructed, or existing affected source are subject to MACT, Subpart DDDD - Plywood and Composite Wood Products (**).

Pine Species: . . . . . 0.62 - 1.11 lbs VOC (as Propane) / MBF (3)
. . . . . or 1.86 - 3.32 lbs VOC (as Carbon) / MBF (3)

Non-Pine Species: . . . . . 0.04 - 0.27 lbs VOC (as Propane) / MBF (3)
. . . . . or 0.12 - 0.81 lbs VOC (as Carbon) / MBF (3)

PINE WOOD:

Southern Yellow Pine - Texas . . . . . 1.11 lbs VOC (as propane)/MBF
. . . . . or 3.32 lbs VOC (as Carbon)/MBF

Southern Yellow Pine - Arkansas . . . . . 0.79 lbs VOC (as propane)/MBF
. . . . . or 2.36 lbs VOC (as Carbon)/MBF

White Pine . . . . . 0.76 lbs VOC (as propane)/MBF
. . . . . or 2.26 lbs VOC (as Carbon)/MBF

Sugar Pine . . . . . 0.69 lbs VOC (as propane)/MBF
. . . . . or 2.07 lbs VOC (as Carbon)/MBF

Ponderosa Pine . . . . . 0.62 lbs VOC (as propane)/MBF
. . . . . or 1.86 lbs VOC (as Carbon)/MBF

NON-PINE WOOD:

Coastal Douglas Fir . . . . . 0.12 lbs VOC (as propane)/MBF
. . . . . or 0.34 lbs VOC (as Carbon)/MBF

Douglas Fir Sapwood . . . . . 0.07 lbs VOC (as propane)/MBF
. . . . . or 0.21 lbs VOC (as Carbon)/MBF

Douglas Fir Heartwood . . . . . 0.27 lbs VOC (as propane)/MBF
. . . . . or 0.81 lbs VOC (as Carbon)/MBF

Hemlock (evergreen tree) . . . . . 0.08 lbs VOC (as propane)/MBF
. . . . . or 0.24 lbs VOC (as Carbon)/MBF

White Fir . . . . . 0.19 lbs VOC (as propane)/MBF
. . . . . or 0.57 lbs VOC (as Carbon)/MBF

Grand Fir . . . . . 0.18 lbs VOC (as propane)/MBF
. . . . . or 0.53 lbs VOC (as Carbon)/MBF

Cedar . . . . . 0.04 lbs VOC (as propane)/MBF
. . . . . or 0.12 lbs VOC (as Carbon)/MBF

Draft

Redwood . . . . . 0.04 lbs VOC (as propane)/MBF
. . . . . or 0.12 lbs VOC (as Carbon)/MBF

NOTE: To calculate hourly emission rates, divide the total emissions by the hours in the drying cycle. Research has shown that VOC emissions increase in a near constant rate during the drying cycle until near the end of the cycle.

Example:

Southern Yellow Pine from Texas has a drying cycle of approximately 33 hours.
Redwood has a drying cycle of approximately 325 hours.
Cedar has a drying cycle of approximately 15 hours.
Coastal Douglas Fir has a drying cycle of approximately 22 hours.
Hemlock has a drying cycle of approximately 39 hours.
Grand Fir has a drying cycle of approximately 44 hours.
White Fir has a drying cycle of approximately 53 hours.

Hardwood: . . . . . 0.26 lbs VOC (as Carbon)/MBF (12)
. . . . . 0.09 lbs VOC (as Propane)/MBF (12)

Plywood Veneer Dryers (steam fired):

Southern Pine . . . . . 2.94 lbs VOC/10,000 ft^2 of 3/8 inch veneer(8)
. . . 3.70 lbs Condensibles/10,000 ft^2 of 3/8 inch veneer (8)
Larch . . . . . 0.19 lbs VOC/10,000 ft^2 of 3/8 inch veneer(8)
. . . 4.14 lbs Condensibles/10,000 ft^2 of 3/8 inch veneer (8)
Douglas Fir Sapwood . . . . . 0.45 lbs VOC/10,000 ft^2 of 3/8 inch veneer(8)
. . . 4.64 lbs Condensibles/10,000 ft^2 of 3/8 inch veneer (8)
Douglas Fir Heartwood . . . . . 1.30 lbs VOC/10,000 ft^2 of 3/8 inch veneer(8)
. . . 3.18 lbs Condensibles/10,000 ft^2 of 3/8 inch veneer (8)

Bark Boiler:

For emission information, see EPA RACT/BACT/LAER Clearinghouse:

Lime Kiln in Paper Mill:

MACT, Subpart MM . . . . . 0.064 gr PM/dscf @ 10% O_2 (Existing)(9)
. . . . . 0.010 gr PM/dscf @ 10% O_2 (New)(9)

For emission information, see EPA RACT/BACT/LAER Clearinghouse.

Paper Machines:

For emission information, see EPA RACT/BACT/LAER Clearinghouse:

VOC ..... ******
Controls ..... Work practices and use of low-VOC additivies

Recycle Fiber (Paper):

For emission information, see EPA RACT/BACT/LAER Clearinghouse:

VOC ..... ******
Controls ..... None

Kraft Pulping:

Digester Relief and Blow Tank ..... 0.03 lbs H_2S/ ADTP (5)
..... 1.2 lbs TRS/ADTP (5)

Brown Stock Washer ..... 0.02 lbs H_2S/ADTP (5)
..... 0.4 lbs TRS/ADTP (5)

Multiple Effect Evaporator ..... 1.1 lbs H_2S/ADTP (5)
..... 0.1 lbs TRS/ADTP (5)

Recovery Boiler and Direct Evaporator

MACT, Subpart MM ..... 0.044 gr PM/dscf @ 8% O_2 (Existing)(9)
..... 0.034 gr PM/dscf @ 8% O_2 (New)(9)
..... 0.025 lbs HAP (measured as methanol)/ton of BLS (New)(9)

Venturi Scrubber ..... 7 lbs SO_2/ADTP (5)
..... 11 lbs CO/ADTP (5)
..... 12 lbs H_2S/ADTP (5)
..... 3 lbs TRS/ADTP (5)

ESP
..... 7 lbs SO_2/ADTP (5)
..... 11 lbs CO/ADTP (5)

draft

. . . . . 12 lbs H_2S/ADTP (5)
. . . . . 3 lbs TRS/ADTP (5)

Smelt Dissolving Tank - Scrubber

MACT, Subpart MM . . . . . 0.20 lbs PM/ton BLS (Existing)(9)
. . . . . 0.12 lbs PM/ton BLS (New)(9)
. . . . . 0.02 lbs H_2S/ADTP (5)
. . . . . 0.02 lbs TRS/ADTP (5)

Turpentine Condenser . . . . . 0.01 lbs H_2S/ADTP (5)
. . . . . 0.5 lbs TRS/ADTP (5)

Plywood:

General Emission Factors can be found in AP-42, Section 10.5 Plywood Manufacturing (01/2002). A list of organic compounds that may be emitted from this facility is included in this Section. New, reconstructed, or existing affected source at subject to MACT, Subpart DDDD - Plywood and Composite Wood Products (**).

Additional VOC emissions information can be found in NCASI Technical Bulletin No. 768 (January 1999) - Volatile Organic Compound Emissions from Wood Products Manufacturing Facilities - Part I - Plywood.

Oriented Strandboard (OSB):

General Emission Factors can be found in AP-42, Section 10.6.1 Waferboard/Oriented Strandboard Manufacturing (3/2002). A list of organic compounds that may be emitted from this facility is included in this Section. New, reconstructed, or existing affected source are subject to MACT, Subpart DDDD - Plywood and Composite Wood Products (**).

Additional VOC emissions information can be found in NCASI Technical Bulletin No. 772 (January 1999) - Volatile Organic Compound Emissions from Wood Products Manufacturing Facilities - Part V - Oriented Strandboard (OSB).

Louisiana-Pacific Corporation submitted an application on 9/9/2004 for their OSB Mill in Carthage (Permit 26002), Panola County, Texas. Results of stack sampling from 1997 to 2000 for the Carthage and Jasper OSB Mills can be found in Appendix C.

Particleboard:

General Emission Factors can be found in AP-42, Section 10.6.2 Particleboard Manufacturing (6/2002). A list of organic compounds that may be emitted from this facility is included in this Section. New, reconstructed, or existing affected source are subject to MACT, Subpart DDDD - Plywood and Composite Wood Products (**).

Additional VOC emissions information can be found in NCASI Technical Bulletin No. 771 (January 1999) - Volatile Organic Compound Emissions from Wood Products Manufacturing Facilities - Part IV - Particleboard.

Medium Density Fiberboard:

General Emission Factors can be found in AP-42, Section 10.6.3 Medium Density Fiberboard Manufacturing (8/2002). A list of organic compounds that may be emitted from this facility is included in this Section. New, reconstructed, or existing affected source are subject to MACT, Subpart DDDD - Plywood and Composite Wood Products (**).

Additional VOC emissions information can be found in NCASI Technical Bulletin No. 770 (January 1999) - Volatile Organic Compound Emissions from Wood Products Manufacturing Facilities - Part III - Medium Density Fiberboard.

Hardboard and Fiberboard:

General Emission Factors can be found in AP-42, Section 10.6.4 Hardboard and Fiberboard Manufacturing (9/2002). A list of organic compounds that may be emitted from this facility is included in this Section. New, reconstructed, or existing affected source are subject to MACT, Subpart DDDD - Plywood and Composite Wood Products (**).

Additional VOC emissions information can be found in NCASI Technical Bulletin No. 773 (January 1999) - Volatile Organic Compound Emissions from Wood Products Manufacturing Facilities - Part VI - Hardboard and Fiberboard.

Engineered Wood Products:

Engineered wood products include laminated veneer lumber (LVL), laminated stand lumber (LSL), parallel stand lumber (PSL), I-joints, and glue-laminated beams (glulam). General Emission Factors can be found in AP-42, Section 10.9 Engineered Wood Products Manufacturing (11/2002). A list of organic compounds that may be emitted from this facility is included in this Section. New, reconstructed, or existing affected source are subject to MACT, Subpart DDDD - Plywood and Composite Wood Products (**).

Additional VOC emissions information can be found in NCASI Technical Bulletin No. 769 (January 1999) - Volatile Organic Compound Emissions from Wood Products Manufacturing Facilities - Part II - Engineered Wood Products.

** MACT, Subpart DDDD establishes national compliance options, operating requirements, and work practice requirements for HAPs emitted from plywood and composite wood products (PCWP) manufacturing facilities that is a major source of HAPs. PCWP include, but are not limited to, plywood, veneer, particleboard, oriented strandboard, hardboard, fiberboard, medium density fiberboard, laminated strand lumber, laminated veneer lumber, wood I-joists, kiln-dried lumber, and glue-laminated beams. A PCWP manufacturing facility is a facility that manufactures plywood and/or composite wood products by bonding wood material (fibers, particles, strands, veneers, etc.) or agricultural fiber, generally with resin under heat and pressure, to form a structural panel or engineered wood product.

Compliance options and operating requirements can be meet by one of three ways, and these requirements can be found in Tables 1A, 1B, and 2 in Appendix B:

(a) Production-based compliance,
(b) Compliance options for add-on control systems, or
(c) Emissions averaging compliance option (for existing sources only).

Work practice requirements can also be found in a Table 3 in Appendix B.

New and reconstructed facilities must comply by September 28, 2004. Existing facilities, or area source, must be in compliance by October 1, 2007.

draft

Potential Federal Standards:

40 CFR 60, Subpart BB - Standards of Performance for Kraft Pulp Mills.

40 CFR 60, Subpart Dc - Standards of Performance for Small Industrial-Commerical-Institutional Steam Generating Units.

40 CFR 60, Subpart Ka - Standard of Performance for Storage Vessels for Petroleum Liquids for which Construction, Reconstruction, or Modification Commenced after May 18, 1978, and Prior to July 23, 1984.

40 CFR 60, Subpart Kb - Standard of Performance for Volatile Organic Liquid Storage Vessels (including Petroleum Liquid Storage Vessels) for which Construction, Reconstruction, or Modification Commenced after July 23, 1984.

40 CFR 63, Subpart S - Pulp and Paper Industry.

40 CFR 63 MM - Chemical Recovery Combustion Sources at Kraft, Sulfite, and Stand-Alone Semichemical Pulp Mills.

40 CRF 63 DDDD - Plywood and Composite Wood Products (PCWP).

40 CFR 63 DDDD - Industrial, Commercial and Institutional Boilers and Process Heaters.

draft

Acronyms:

ADTP = Air Dry Ton of Pulp (10% moisture)
BDTP = Bone Dry Ton of Pulp (0% moisture)
BLS = Black Liquor Solids
H_2S = Hydrogen Sulfide
MBF = 1000 board feet
MDTP = Machine Dry Ton of Pulp (6% moisture)
MMBtu = Million BTUs
MSF 1/8 = 1000 square feet of 1/8-inch thick panel
MSF 3/8 = 1000 square feet of 3/8-inch thick veneer
ODTP = Oven Dry Ton of Pulp (0% moisture)
TRS = Total Reduced Sulfur

draft

References:

(1) Fugitive Dust Control Technology, Noyes Data Corporation, 1983 and AP-42, Section 10.4.3 Fugitive Emission Factors, Table 10.4-2 (7/1979)

(2) AP-42, Section 10.6.4 Hardboard and Fiberboard Manufacturing, Table 10.6.4-7 (9/2002)

(3) NCASI Technical Bulletin No. 718 - July 1996

(4) Inland Paperboard and Packaging Inc's application received 3/1/2004

(5) AP-42, Section 10.2 Chemical Wood Pulping, Table 10.2-1 (9/1990)

(6) AP-42, Section 10.3 Plywood Veneer, Table 10.3-1 (2/1980)

(7) AP-42, Section 10.4 Woodworking Waste Collection Operations, Table 10.4-1 (2/1980)

(8) AP-42, Section 10.3 Plywood Veneer and Layout Operations, Table 10.3-2 (2/1980)

(9) MACT, Subpart MM - Chemical Recovery Combustion Sources at Kraft, Soda, Sulfite, and Stand-Alone Semichemical Pulp Mills

(10) Test data from the Corrigan Plywood facility

(11) Idaho DEQ Emission Factor Guide for Wood Industry (1/8/1997)

(12) Appendix D of report by MRI to EPA for the development of MACT, Subpart DDDD (6/9/2000)

(13) EPA document "Emission Inventory Improvement Project", Volume II, Chapter 14, P. 14A-133.

(14) AP-42, Section 9.9.1 Grain Elevators and Processes, Table 9.9.1-1

Appendix A2

ODEQ Wood Products Particulate Fraction

Type of Control	PM_{10} Fraction[1] of Total Particulate Matter (PM)[2]				
	Boilers	Veneer Dryers	Particle Dryers	Press Vents	Cyclones and Process Equipment
Uncontrolled	50	100	75	85	
Bag filter system					99.5
Cyclone – high efficiency					95
Cyclone – medium efficiency					85
Scrubber – Ceilcote	100	100	100		
Wet scrubber –high efficiency	99	99	99		
Wet scrubber – medium efficiency	95	95	95		
Wet scrubber – low pressure	90	90	90		
ESP – both wet and dry	99.5	99.5	99.5		
Multiclone – high pressure	95		95		
Multiclone – low pressure	50		50		

Type of Control	$PM_{2.5}$ Fraction[3] of Total Particulate Matter (PM)[4]				
	Boilers	Veneer Dryers	Particle Dryers	Press Vents	Cyclones and Process Equipment
Uncontrolled		100	75	85	
Bag filter system	99				99
Cyclone – high efficiency					80
Cyclone – medium efficiency					50
Scrubber – Venturi	90	90	90		
Wet scrubber – high efficiency	90	90	90		
Wet scrubber – medium efficiency	25	25	25		
Wet scrubber – low efficiency	20	20	20		
ESP – both wet and dry	95	95	95		
Multiclone – high pressure	80		80		
Multiclone – low pressure	50		50		

[1] PM_{10} fraction as a percent of total particulate matter for different types of control equipment.
[2] These PM_{10} fractions should be used for guidance only when better information is not available.
[3] $PM_{2.5}$ fraction as a percent of total particulate matter for different types of control equipment.
[4] These $PM_{2.5}$ fractions should be used for guidance only when better information is not available.

Appendix A3

NCDENR Wood Kiln Emission Factor Sheet for Softwood Steam Heated

FACTORS:

Hardwood VOC factor changed from 0.34 to 0.409 to maintain 10% of softwood factor (REF: Kiln Factors per June 1999 DAQ letter to AFMA - posted on DAQ website)
Hardwood toxics - there are no HAP/TAPS from hardwood kilns reported on this spreadsheet

Softwood: VOC, toxics, and PM from Wallace Pitts (DAQ-RCO) analysis of NCASI/EPA data summarized below (see full spreadsheet on DAQ website for factor documentation):

Note: NCASI data is based on shorter kiln cycles than for lumber kiln cycles at typical wood furniture manufacturing facilities. The emission factors may not be applicable.

Revised, references
Southern Yellow Pine Emission Factors
MBF is 1000 board feet

	emission factor, pounds per MBF		
	Steam heated	Suspension burner	Gasifier
PM	0.022 (1)	0.40 (2)	0.14 (3)
PM_{10}	~	~	~
VOC			
as carbon	3.61 (4)	3.83 (5)	3.83 (5)
as VOC (pinene)	4.09	4.34	4.34
Methanol	0.199 (6)	0.161 (7)	0.161 (7)
Phenol	0.01(8)	0.01 (8)	0.01 (8)
Formaldehyde	0.0183 (9)	0.103 (10)	0.103 (10)
Acetaldehyde (11)	0.052	0.052	0.052
Acrolein (12)	0.0075	0.0075	0.0075

	emission factor, pounds per MBF-hour		
	Steam heated	Suspension burner	Gasifier
Acetaldehyde	0.00377 (13)	0.00377	0.00377
Acrolein	0.00051 (14)	0.00051	0.00051
formaldehyde	0.0014 (15)	0.01185 (16)	0.01185 (16)

For TAPs, the emissions on an hourly basis are given by
(Charge in 1000 board feet)* (emission factor)
Example: 140,000 BF kiln charge = (140)*(0.00140) = 0.196 lb formaldehyde per hour

Note: for hourly emissions of phenol, use emission factor in lb/MBF.

REFERENCES

(1)

PRODUCT	FIRING TYPE	MILLS/UNITS/RUNS	RATIO OF NON-DETECTS	RANGE		MEDIAN	MEAN	UNITS
Southern Pine Lu	Steam Heated	3/3/16	0/16 nd	2.00E-03 to	1.70E-01	9.30E-03	2.20E-02	lb/MBF
Southern Pine Lu	Direct Fired	6/7/24	0/24 nd	2.30E-02 to	1.30E+00	3.20E-01	3.70E-01	lb/MBF

(2) personal Communication, D Word, NCASI, May 31, 2005

Kiln 1K181

Suspension Burner	Run	M 5 lb/MBF	Production	Cycle time, hrs
1K181	1	0.4170	133	20.3
1K181	2	0.3480	133	20.3
1K181	1	0.4800	131	20
1K181	2	0.4100	131	20
1K181	3	0.3600	131	20
		0.40	131.80	20.12

(3) personal Communication, D Word, NCASI, May 31, 2005

Kiln 098 DF

Gasifier	Run	M 5 lb/MBF	Production	Cycle time, hrs
1K098	1	0.2670	130	26.45
1K098	2	0.2010	130	26.45
1K098	3	0.2260	130	26.45
2K098	1	0.1520	128	17.52
2K098	2	0.1810	128	17.52
2K098	3	0.0980	128	17.52
2K098	1	0.0640	104.5	17.25
2K098	2	0.0548	104.5	17.25
2K098	3	0.0466	104.5	17.25
		0.143	120.83	20.41

(4) NCASI Technical Bulletin 845 Table 8.2 Steam heated average of all kilns
(5) NCASI Technical Bulletin 845 Table 8.1 Direct fired (gasifier) full scale kiln only
(6) NCASI Technical Bulletin 845 Table 9.6 Steam heated all kilns
(7) NCASI Technical Bulletin 845 Table 9.4 Direct fired (gasifier) full scale kiln
(8) Table 2A to Appendix B Emission factors for Plywood and Composite Wood Product MACT (Subpart DDDD)
(9) NCASI Technical Bulletin 845 Table 9.5 steam heated full scale kiln and OSU small scale runs. MSU not used. See spreadsheet tab for statistical test
(10) NCASI Technical Bulletin 845 Table 9.3 Direct fired full scale kiln only
(11) NCASI Technical Bulletin 845 Appendix BB6 FSK INDF3 and BB7 OSU INDF3
(12) NCASI Technical Bulletin 845 Appendix BB6 FSK INDF3 and BB7 OSU INDF3
(13) NCASI Technical Bulletin 845 Appendix BB6 FSK INDF3 run # 10 and BB7 OSU INDF3 Run # 2
(14) NCASI Technical Bulletin 845 Appendix BB6 FSK INDF3 run # 10 and BB7 OSU INDF3 Run # 2
(15) NCASI Technical Bulletin 845 Appendix Y7 FSK INDF1 run # 9, BB6 FSK INDF3 run # 10, App Y9 OSU INDF1 run # 4, BB7 OSU INDF3 run # 5
(16) NCASI Technical Bulletin 845 Appendix Y1 FSK DF2 run # 6, Y2 FSK DF5 run # 6

Appendix A4

ADEQ Memo for Lumber Kiln VOC Emissions

Memorandum

To: ADEQ Air Permit Engineers
From: Thomas Rheaume, Permit Branch Manager
Date: October 31, 2014
RE: VOC emissions from Lumber Drying Kilns

This guidance is to provide some consistency to the evaluation, limits and testing of VOC emissions from lumber kilns. It addresses VOC emissions only and not other emissions such those resulting from fuel use; except that VOC from fuel use is included in the case of direct fired kilns.

<u>Summary</u>

Since:

- The inherent design and function of kilns presents difficulty in testing accurately,
- VOC emissions are not subject to any control by the facility,
- NCASI and ADEQ data shows VOC emissions are consistently in the same emission factor range,
- No benefit is derived by requiring VOC testing on uncontrolled sources if acceptable values are used in permitting analysis, including
    - Emission Rates
    - BACT determinations
    - PSD Determinations/Netting

This memo establishes guidance that any permit that uses an <u>uncontrolled emission factor</u> of 3.5 and 3.8 lbVOC /MBF* average, for indirect and direct fired kilns respectively, is acceptable without additional testing conditions and extends this to PSD issues as listed above. This is a long term average (lb/batch or tons per rolling 12 month) and facilities may request higher short term (lb/hr) rates. Other values can be considered on a case by case basis with or without testing required.

This applies to the <u>emission factor</u> and is not a determination of BACT emission controls. A BACT determination is still required for applicable PSD permits (these factors can be used in the analysis) and if the final permit rates and limits are based on these factors without add on controls, then no testing is necessary.

*MBF is defined as 1000 board-feet of lumber

<u>Discussion</u>

Currently there are 4 types of lumber drying kilns found in Arkansas consisting of combinations of batch and continuous kilns and direct fired (wood or natural gas) and indirect (steam heated). These kilns primarily dry southern yellow pine, though on occasion hardwood may be dried.

Emissions result from the drying of the lumber and also in the combustion of the fuel in the case of direct fired kilns. These kilns do not employ any air pollution control equipment.

The kilns are constructed with multiple stacks or vents. For direct fired kilns, the combustion process contains a blower creating a flow of exhaust gasses. In an indirect kiln, there is no active fan or exhaust.

Stack testing of direct fired kilns has been done in the past by estimating total flow rates based on combustion gasses generated and testing of one vent for emissions, based on the assumption that all vents will have equal concentrations.

Emission data for VOC comes primarily from NCASI data and testing in Arkansas. These are summarized in the table below:

Type of Kiln	NCASI Factor lb/MBF	NCASI VOC Data[1] lb/MBF	ADEQ VOC Factor lb/MBF[5]	AR Test results
Batch Direct	3.8	3.38 lb/MBF mean[2] 5.16 lb/MBF max	3.8 lb/MBF	2.05 lb/hr[6]
Batch Indirect	3.5		3.5 lb/MBF	22.69 lb/hr[6]
Continuous Direct	3.8	3.22 lb/MBF mean 4.59 lb/MBF max	3.8 lb/MBF	3.61 & 2.38 lb/MBF[3] 2.9 lb/MBF[4]
Continuous Indirect	3.5	N/A	3.5 lb/MBF	None

[1]Data from the latest NCASI data collection. NCASI cautions against setting limits based solely on the mean.
[2]Southern Yellow Pine Mix, less than 50% Hardwood – NCASI did not specify if they were DF or IDF, indicated factors are good for both types.
[3] Anthony Forest Products
[4] Bibler Brothers
[5]Value used in permits
[6] Deltic, unknown lb/MBF conversion

BACT determinations for lumber kilns are attached, as of the date of this memorandum.. Many are not listed in lb/MBF but of those listed as such, limits range from 3.5 up to 7 lb/MBF. The most common limits are in the 3.5 to 5.2 range.

LUMBER KILN BACT DETERMINATIONS AS OF 10-31-2014

RBLCID	FACILITY_NAME	FACILITY_STATE	PROCESS_NAME	PRIMARY_FUEL	TESTMETHOD	EMISSION_LIMIT_1	EMISSION_LIMIT_1_UNIT	EMISSION_LIMIT_2	EMISSION_LIMIT_2_UNIT
AL-0235	ALBERTVILLE SAWMILL	AL	TWO 182.14 MBF, STEAM-HEADED LUMBER DRY KILNS (NORTH & SOUTH - K100/K101)		Unspecified	7	LB/MBF	0	
AL-0257	WEST FRASER-OPELIKA LUMBER MILL	AL	Two(2) 87.5 MMBF/YR Continuous kilns with a 35 MMBtu/hr direct-fired wood burner	Wood Shavings	Unspecified	3.76	LB/MBF	175	K/12 MONTHS
AL-0258	WEST FRASER, INC. - MAPLESWILE MILL	AL	Two(2) 100 MMBF/Y Continuous direct fired kiln	Wood Residuals	Unspecified	3.76	LB/MBF	0	
AL-0259	THE WESTERVELT COMPANY	AL	Three (3) 93 MMBF/Y Continous, Dual path, indirect fired kilns	Steam (Indirect heat)	Unspecified	4.57	LB/MMBF	0	
AL-0260	THE WESTERVELT COMPANY	AL	Two (2) 125 MMBtu/Hr. Wood-fired Boilers	Wood Residuals	Unspecified	0.5	LB/MMBTU	0.5	LB/MMBTU
AR-0080	WALDO	AR	STEAM HEATED LUMBER DRYING KILNS		Unspecified	3.5	LB/MBF	0	
AR-0083	POTLATCH CORPORATION - OZAN UNIT	AR	WOOD FIRED BOILER	WOOD CHIPS	Unspecified	0.034	LB/MMBTU	6	LB/H
AR-0083	POTLATCH CORPORATION - OZAN UNIT	AR	KILNS 1-4	STEAM HEATED	Unspecified	3.5	LB/MMBF	119	LB/H
AR-0084	POTLATCH CORPORATION - OZAN UNIT	AR	WOOD FIRED BOILER	WOOD CHIPS	Unspecified	0.034	LB/MMBTU	6	LB/H
AR-0084	POTLATCH CORPORATION - OZAN UNIT	AR	KILNS 1-4	STEAM HEATED	Unspecified	3.5	LB/MMBF	119	LB/H
AR-0101	BIBLER BROTHERS LUMBER COMPANY	AR	SN-07G AND SN-13G CONTINOUS OPERATING KILNS	WOOD RESIDUE	Unspecified	3.8	LB/MBF VOC	46.5	LB VOC/H/KILN
*AR-0102	ANTHONY TIMBERLANDS, INC.	AR	KILN #3 INDIRECT-FIRED	NONE	Unspecified	3.5	LB/MBF	350	T/YR
*AR-0102	ANTHONY TIMBERLANDS, INC.	AR	KILN #4 INDIRECT-FIRED	NONE	Unspecified	3.5	LB/MBF	350	T/YR

RBLCID	FACILITY_NAME	FACILITY_STATE	PROCESS_NAME	PRIMARY_FUEL	TESTMETHOD	EMISSION_LIMIT_1	EMISSION_LIMIT_1_UNIT	EMISSION_LIMIT_2	EMISSION_LIMIT_2_UNIT
*AR-0102	ANTHONY TIMBERLANDS, INC.	AR	KILN #5 INDIRECT-FIRED	NONE	Unspecified	3.5	LB/MBF	350	T/YR
FL-0315	NORTH FLORIDA LUMBER/BRISTOL SAW MILL	FL	Wood lumber kiln	steam heated	Unspecified	116.93	T/YR	0	
GA-0146	SIMPSON LUMBER CO, LLC MELDRIM OPERATIONS	GA	KILN 3	WASTE WOOD	Unspecified	3.83	LB/MBF	0	
GA-0146	SIMPSON LUMBER CO, LLC MELDRIM OPERATIONS	GA	KILN 4	WASTE WOOD	Unspecified	3.93	LB/MBF	0	
LA-0180	JOYCE MILL	LA	WOOD LUMBER KILNS (INDIRECT FIRED)	N/A	Unspecified	367.77	LB/H	750	T/YR
LA-0181	COUSHATTA SAWMILL	LA	WOOD LUMBER KILNS (INDIRECT FIRED)	N/A	Unspecified	28	LB/H	122.6	T/YR
LA-0252	JOYCE MILL	LA	Kipper Boiler No. 1 and No. 2	wood residue	EPA/OAR Mthd 10	105.52	LB/H	0	
LA-0252	JOYCE MILL	LA	McBurney Boiler No. 4	wood residue	EPA/OAR Mthd 10	279.1	LB/H	0	
LA-0252	JOYCE MILL	LA	Lumber kilns		Unspecified	930	T/YR	0	
OK-0113	WRIGHT CITY COMPLEX	OK	PLANER MILL		Unspecified	0		0	
OK-0113	WRIGHT CITY COMPLEX	OK	LUMBER KILNS		Unspecified	4.8	LB/MBF	0	
OR-0049	GILCHRIST FACILITY	OR	LUMBER DRY KILNS		Unspecified	1.69	LB/MBF	0	
SC-0085	ELLIOT SAWMILLING COMPANY	SC	LUMBER DRYING KILN	WOOD WASTE	Unspecified	4.5	LB/1000 BF	0	
*SC-0135	NEW SOUTH COMPANIES, INC. - CONWAY PLANT	SC	LUMBER KILNS		None selected in SAE	799.18	T/YR	4.2	LB/MBF
SC-0136	SIMPSON LUMBER COMPANY, LLC	SC	DIRECT-FIRED LUMBER DRYING KILN NO. 4	DRY WOOD WASTE	Unspecified	104	T/YR	3.8	LB/MBF

RBLCID	FACILITY_NAME	FACILITY_STATE	PROCESS_NAME	PRIMARY_FUEL	TESTMETHOD	EMISSION_LIMIT_1	EMISSION_LIMIT_1_UNIT	EMISSION_LIMIT_2	EMISSION_LIMIT_2_UNIT
SC-0137	ELLIOTT SAWMILLING COMPANY	SC	DIRECT-FIRED LUMBER-DRYING KILN NO. 4	SAWDUST	Unspecified	122	T/YR	4.5	LB/MBF
SC-0138	ELLIOTT SAWMILLING COMPANY	SC	DIRECT FIRED LUMBER DRYING KILN NO.5	SAWDUST	Unspecified	119	T/YR	4.5	LB/MBF
SC-0149	KLAUSNER HOLDING USA, INC	SC	BIOMASS BOILER EU001	WET BARK, WOOD	Unspecified	0.017	LB/MMBTU	0	
SC-0149	KLAUSNER HOLDING USA, INC	SC	BIOMASS BOILER EU002	WET BARK, WOOD	Unspecified	0.017	LB/MMBTU	0	
SC-0149	KLAUSNER HOLDING USA, INC	SC	NATURAL GAS BOILER EU003	NATURAL GAS	Unspecified	0.003	LB/MMBTU	0	
SC-0149	KLAUSNER HOLDING USA, INC	SC	NATURAL GAS BOILER EU004	NATURAL GAS	Unspecified	0.003	LB/MMBTU	0	
SC-0149	KLAUSNER HOLDING USA, INC	SC	NATURAL GAS BOILER EU005	NATURAL GAS	Unspecified	0.003	LB/MMBTU	0	
SC-0149	KLAUSNER HOLDING USA, INC	SC	NATURAL GAS BOILER EU006	NATURAL GAS	Unspecified	0.003	LB/MMBTU	0	
SC-0149	KLAUSNER HOLDING USA, INC	SC	LUMBER DRYING KILNS EU007		Unspecified	3.5	LB/MBF	0	
SC-0149	KLAUSNER HOLDING USA, INC	SC	COLORS, INKS, LACQUERS EU013		Unspecified	0.03	LB/MBF	0	
*SC-0151	WEST FRASER - NEWBERRY LUMBER MILL	SC	TWO - 35 MMBTU/H DUAL PATH, DIRECT FIRED, CONTINUOUS LUMBER KILNS, 15 THOUSAND BF/H, EACH	SAWDUST	Unspecified	3.76	LB/MBF	376	T/YR
SC-0155	NEW SOUTH LUMBER, INC. - CAMDEN PLANT	SC	WOOD PRODUCTS INDUSTRIES	VIRGIN WOOD WASTE	Unspecified	0		0	
TX-0483	TEMPLE-INLAND DIBOLL OPERATIONS	TX	EAST LUMBER KILNS 1&2 (4)		Unspecified	30.6	LB/H	85.35	T/YR
TX-0483	TEMPLE-INLAND DIBOLL OPERATIONS	TX	WEST LUMBER KILNS 1&2 (4)		Unspecified	30.6	LB/H	85.35	T/YR

RBLCID	FACILITY_NAME	FACILITY_STATE	PROCESS_NAME	PRIMARY_FUEL	TESTMETHOD	EMISSION_LIMIT_1	EMISSION_LIMIT_1_UNIT	EMISSION_LIMIT_2	EMISSION_LIMIT_2_UNIT
TX-0584	TEMPLE INLAND PINELAND MANUFACTURING COMPLEX	TX	Dry studmill kilns 1 and 2	wood	EPA/OAR Mthd 25	2.49	LB VOC/1000 BOARDFEE	0	
WA-0327	SKAGIT COUNTY LUMBER MILL	WA	WOOD-FIRED COGENERATION UNIT	BARK & WASTE WOOD	Unspecified	0.019	LB/MMBTU	35.8	T/YR
WA-0327	SKAGIT COUNTY LUMBER MILL	WA	7. DRY KILNS		Unspecified	54	T/YR	0	
WA-0327	SKAGIT COUNTY LUMBER MILL	WA	ANTI-MOLD SPRAY SYSTEM		Unspecified	9	T/YR	0	

Appendix A5

EPA Region 10 Memo on Sawmill Emissions

UNITED STATES ENVIRONMENTAL PROTECTION AGENCY
REGION 10
1200 Sixth Avenue, Suite 900
Seattle, WA 98101-3140

OFFICE OF
AIR, WASTE, AND TOXICS

MAY 08 2014

MEMORANDUM

SUBJECT: Particulate Matter Potential to Emit Emission Factors for Activities at Sawmills, Excluding Boilers, Located in Pacific Northwest Indian Country

FROM: Dan Meyer, Environmental Engineer
Air Permits & Diesel Unit

THRU: Donald A. Dossett, P.E., Manager
Air Permits & Diesel Unit

TO: Permit File

EPA Region 10 has compiled the attached list of particulate matter (PM – CAA § 111 pollutant, PM_{10} and $PM_{2.5}$ – criteria pollutants) emission factors ("EFs") for use in determining the potential emissions, more commonly referred to as potential to emit ("PTE"), for activities at sawmills, excluding boilers, located in Pacific Northwest Indian Country.[1] The EFs are presented in units appropriate for the particular activity. PTE generally represents the maximum capacity of a source to emit a pollutant under its physical and operational design taking into consideration restrictions that are federally enforceable. While PM, PM_{10} and $PM_{2.5}$ PTE are all used to determine applicability of the Compliance Assurance Monitoring program and Prevention of Significant Deterioration construction permit program, only PM_{10} and $PM_{2.5}$ are employed to determine applicability of the Title V operating permit program.[2]

The Federal Air Rules for Reservations ("FARR") limit particulate matter emissions from applicable activities at sawmills. The rules and the rationale for not employing them to determine PTE are as follows: (a) 20 percent opacity limit (40 CFR § 49.124) – lack of a correlation between opacity and particulate matter emissions, (b) requirements for limiting fugitive emissions (40 CFR § 49.126) – lack of a correlation between compliance with requirements and particulate matter emissions, (c) non-combustion stack 0.1 grain per dry standard cubic foot PM emission limit (40 CFR § 49.125) – resultant PTE would be unrealistically high as we assume that an unreasonable amount of wood residue is exhausted to atmosphere rather than recovered for sale or combustion in on-site boiler.

There are no other federal regulations beyond the FARR that limit particulate matter emissions from activities addressed by this memorandum. Under the circumstances, it is appropriate to employ the EFs presented in the attachment to estimate PTE, unless a more representative (e.g. site-specific) EF is available.

---

[1] Activities include log bucking and debarking, sawing, lumber drying, mechanical and pneumatic conveyance of wood residue, wind erosion of wood residue piles and traffic along paved and unpaved roads.
[2] October 16, 1995 EPA memorandum entitled, "Definition of Regulated Pollutant for Particulate Matter for Purposes of Title V"

EPA Region 10 Particulate Matter Potential to Emit Emission Factors for Activities at Sawmills, Excluding Boilers, Located in Pacific Northwest Indian Country, May 2014

EF Reference No.	Emissions Generating Activity[1]	PM[2] EF	PM_{10} % of PM	PM_{10} EF	$PM_{2.5}$ % of PM	$PM_{2.5}$ EF	Units
1, 2, 3, 4	Log Bucking[3]	0.035	50	0.0175	25	0.00875	lb/ton log
1, 2, 3, 5	Log Debarking[3]	0.024	50	0.012	25	0.006	lb/ton log
1, 2, 3, 6	Sawing[3]	0.350	50	0.175	25	0.0875	lb/ton log
1, 3, 7	Lumber Drying - Resinous Softwood Species[4]	0.02	100	0.02	100	0.02	lb/mbf
1, 3, 7	Lumber Drying - Non-Resinous Softwood Species[5]	0.05	100	0.05	100	0.05	lb/mbf
1, 2, 3, 8	"Drop" of "wet" material[5] from one surface to another including, but not limited to, (a) each mechanical conveyance drop between point of generation and storage bin (but not including bin unless open to atmosphere) (b) loadout from storage bin into a truck bed or railcar and (c) drop onto a pile. Apply EF to each "drop."	0.00075	N/A	0.00035	N/A	0.00005	lb/bdt material
1, 2, 3, 8	"Drop" of "dry" material[5] from one surface to another including, but not limited to, (a) each mechanical conveyance drop between point of generation and storage bin (but not including bin unless open to atmosphere) (b) loadout from storage bin into a truck bed or railcar and (c) drop onto a pile. Apply EF to each "drop."	0.0015	N/A	0.0007	N/A	0.0001	lb/bdt material
1, 3, 9	Pneumatically convey material[6] through medium efficiency cyclone to bin	0.5	85	0.425	50	0.25	lb/bdt material
1, 3, 9	Pneumatically convey material[6] through high efficiency cyclone to bin	0.2	95	0.19	80	0.16	lb/bdt material
1, 3, 9	Pneumatically convey material[6] through cyclone to bin. Exhaust routed through baghouse.	0.001	99.5	0.000995	99	0.00099	lb/bdt material
1, 3, 9	Pneumatically convey material[6] into target box	0.1	85	0.085	50	0.05	lb/bdt material
1, 2, 10	Wind Erosion of Pile	0.38	50	0.19	25	0.095	ton/acre-yr
1, 2, 11	Paved Roads	Emission factors based upon site-specific parameters.					lb/VMT
1, 2, 12	Unpaved Roads	Emission factors based upon site-specific parameters.					lb/VMT

Acronyms

bdt: bone dry ton

mbf: 1000 board foot lumber

VMT: vehicle mile traveled

[1] If any activity occurs within a building, reduce the PM, PM_{10} and $PM_{2.5}$ emission factor ("EF") by 100 percent (engineering judgement) as emissions struggle to escape through doorways and other openings. If an activity's by-products are evacuated pneumatically to a target box, cyclone or bag filter system, then only the associated downstream conveyance emissions are counted.

[2] PM refers to the CAA § 111 pollutant generally measured using EPA Reference Method 5 to determine the filterable fraction of particulate matter. "Particulate matter" is a term used to define an air pollutant that consists of a mixture of solid particles and liquid droplets found in the ambient air. PM does not include a condensable fraction.

[3] EF for log bucking, debarking and sawing are expressed in units of "lb/ton log" in the table above. The EF can be expressed in units of "lb/mbf" lumber as follows:

$$\text{lb/mbf} = (\text{lb PM/ton log}) \times (\text{ton/2000 lb}) \times (\text{LD lb/ft}^3) \times (\text{LRF bf lumber/ft}^3 \text{ log}) \times (\text{1000 bf/mbf})$$

where "LD" stands for log density and "LRF" stands for log recovery factor

• LD values are species-specific and are provided by The Engineering ToolBox and are listed at http://www.engineeringtoolbox.com/weigt-wood-d_821.html

• LRF value of 6.33 bf/ft^3 log is specific to softwood species of the Pacific Coast East. See Section 2 of Appendix D to Forest Products Measurements and Conversion Factors with Special Emphasis on the U.S. Pacific Northwest. College of Forest Resources, University of Washington. 1994. See http://www.ruraltech.org/projects/conversions/briggs_conversions/briggs_append2/appendix02_combined.pdf

[4] Douglas Fir, Engelmann Spruce, Larch, Lodgepole Pine, Ponderosa Pine and Western White Pine

[5] White Fir, Western Hemlock and Western Red Cedar

[6] The "material" in this entry refers to bark, hogged fuel, green chips, dry chips, green sawdust, dry sawdust, shavings and any other woody by-product of lumber production.

No.	EF Reference
1	Although this activity may be subject to the FARR visible emissions limit of 20% opacity (40 CFR § 124(d)), the limit was not further considered in deriving an emission factor due to the lack of a correlation between opacity and particulate matter emissions.
2	Although this activity may be subject to the FARR requirements for limiting fugitive particulate matter emissions (40 CFR §126), those requirements were not further considered in deriving an emission factor due to lack of a correlation between compliance with requirements and particulate matter emissions.
3	Although this activity may be subject to the FARR stack PM emission limit of 0.1 gr/dscf (40 CFR § 125(d)(3)), that limit was not further considered in deriving an emission factor because the resultant PTE would be unrealistically high.
4	For PM, PM_{10}, and $PM_{2.5}$ EF, apply engineering judgement to estimate that log bucking emissions are one-tenth sawing emissions. EPA has stated that log bucking is normally a negligible source of fugitive PM emissions. See page 2-125 of Assessment of Fugitive Particulate Emission Factor for Industrial Processes, EPA-450/3-78-107, September 1978. The document can be downloaded from internet at http://nepis.epa.gov/Simple.html by entering EPA publication number. For sawing emissions details, see Reference No. 3 below.
5	• For PM EF, see Table 2-47 of Assessment of Fugitive Particulate Emission Factor for Industrial Processes, EPA-450/3-78-107, September 1978. See also Table 2-59 of Technical Guidance for Controls of Industrial Process Fugitive Particulate Emissions, EPA-450/3-77-010, March 1977. Both documents can be downloaded from internet at http://nepis.epa.gov/Simple.html by entering EPA publication number. EPA revoked the PM EF from WebFIRE on January 1, 2002. See detailed search results for SCC 3-07-008-01 (include revoked factors) at http://cfpub.epa.gov/webfire/index.cfm?action=fire.detailedSearch • For PM_{10} and $PM_{2.5}$ EF, apply engineering judgement to estimate that (a) PM_{10} emissions are one-half PM emissions and (b) $PM_{2.5}$ emissions are one-half PM_{10} emissions.
6	• Sawing consists of the following cummulative activities: breaking the log into cants and flitches with a smooth edge, breaking cant further down into multiple flitches and/or boards, taking the flitch and trim off all irregular edges to leave four-sided lumber and trimming to square the ends. • For PM EF, see Table 2-47 of Assessment of Fugitive Particulate Emission Factor for Industrial Processes, EPA-450/3-78-107, September 1978. See also Table 2-59 of Technical Guidance for Controls of Industrial Process Fugitive Particulate Emissions, EPA-450/3-77-010, March 1977. Both documents can be downloaded from internet at http://nepis.epa.gov/Simple.html by entering EPA publication number. EPA revoked the PM EF from WebFIRE on January 1, 2002. See detailed search results for SCC 3-07-008-01 (include revoked factors) at http://cfpub.epa.gov/webfire/index.cfm?action=fire.detailedSearch • For PM_{10} and $PM_{2.5}$ EF, apply engineering judgement to estimate that (a) PM_{10} emissions are one-half PM emissions and (b) $PM_{2.5}$ emissions are one-half PM_{10} emissions.
7	• For PM EF, see ODEQ ACDP Application Guidance AQ-EF02 (4/25/00). Douglas fir is a resinous softwood species and western hemlock is a non-resinous softwood species. • For PM_{10} and $PM_{2.5}$ EF, apply engineering judgement to estimate that all PM emitted is organic aerosols and fully PM_{10} and $PM_{2.5}$ emissions.
8	• See Section 13.2.4 of EPA's AP-42, November 2006 at http://www.epa.gov/ttn/chief/ap42/ch13/final/c13s0204.pdf. Apply Equation 1 on page 13.2.4-4 to estimate emissions resulting from material drops as follows: E [lb PM/ton] = (k) X (0.0032) X $(U/5)^{1.3}$ / $(M/2)^{1.4}$

Wet Material Drop

Particulate	k	0.0032	$(U/5)^{1.3}$	$(M/2)^{1.4}$	lb PM / ton
PM	0.74	0.0032	6.6693	21.0552	0.00075
PM_{10}	0.35				0.00035
$PM_{2.5}$	0.053				0.00005

The following conservative assumptions were made in applying Equation 1:

Mean wind speed (U) = 15 miles per hour

$(U/5)^{1.3}$ = 6.66930

Material moisture content (M) = 34 percent. Value based upon observations

$(M/2)^{1.4}$ = 21.05520

Note: • Mean wind speed of 15 mph is a reasonable upper bounder estimate.

• Moisture content of 34 percent for "wet" material is based upon observation that average moisture content (dry basis) of green douglas fir lumber (common to the Pacific Northwest) is 51 percent as recorded prior to lab scale kiln VOC emissions testing conducting by Oregon State University's Mike Milota and organized in Microsoft Excel workbook entitled, "EPA Region 10 HAP and VOC Emission Factors for Lumber Drying, December 2012." 51 percent moisture content (dry basis) is equivalent to 34 percent moisture content (wet basis) as illustrated below:

MCD = MCW / (1-MCW); where

MCD: moisture content dry basis

MCW: moisture content wet basis

0.51 = MCW / (1 - MCW)

0.51 - (0.51)(MCW) = MCW

(1.51)(MCW) = 0.51

MCW = 0.34, or 34 percent

Dry Material Drop

Particulate	k	× 0.0032	× $(U/5)^{1.3}$	/ $(M/2)^{1.4}$	= lb PM / ton
PM	0.74	0.0032	6.6693	10.5552	0.0015
PM_{10}	0.35				0.0007
$PM_{2.5}$	0.053				0.0001

The following conservative assumptions were made in applying Equation 1:

Mean wind speed (U) = 15 miles per hour

$(U/5)^{1.3}$ = 6.6693

Material moisture content (M) = 13 percent

$(M/2)^{1.4}$ = 10.5552

Note:
- Mean wind speed of 15 mph is a reasonable upper bounder estimate.
- Moisture content of 13 percent for "dry" material is based upon observation that typical moisture content (dry basis) of kiln-dried lumber is 15 percent as recorded during lab scale kiln emissions testing conducting by Oregon State University's Mike Milota and organized in Microsoft Excel workbook entitled, "EPA Region 10 HAP and VOC Emission Factors for Lumber Drying, December 2012." 15 percent moisture content (dry basis) is equivalent to 13 percent moisture content (wet basis) as illustrated below:

MCD = MCW / (1-MCW); where

MCD: moisture content dry basis

MCW: moisture content wet basis

0.15 = MCW / (1 - MCW)

0.15 - (0.15)(MCW) = MCW

(1.15)(MCW) = 0.15

MCW = 0.13, or 13 percent

9	• For PM EF, see Oregon Department of Environmental Quality (ODEQ) Wood Products Emission Factors, AQ-EF02 Revised 08/01/11. http://www.deq.state.or.us/aq/permit/acdp/docs/AQ-EF02.pdf • For PM_{10} and $PM_{2.5}$ EF, see ODEQ Wood Products Emission Factors - $PM_{10}/PM_{2.5}$ Fractions, AQ-EF03 Revised 08/01/11. http://www.deq.state.or.us/aq/permit/acdp/docs/AQ-EF03.pdf
10	• For PM EF, see last row of Table 11.9-4 on page 11.9-11 of Section 11.9 of EPA's AP-42, July 1998 at http://www.epa.gov/ttn/chief/ap42/ch11/final/c11s09.pdf. • For PM_{10} and $PM_{2.5}$ EF, apply engineering judgement to estimate that (a) PM_{10} emissions are one-half PM emissions and (b) $PM_{2.5}$ emissions are one-half PM_{10} emissions.
11	See Equation 1 on page 13.2.1-4 of Chapter 13.2.1 of AP-42, January 2011 at http://www.epa.gov/ttn/chief/ap42/ch13/final/c13s0201.pdf
12	See Equation 1a on page 13.2.2-4 of Chapter 13.2.2 of AP-42, November 2006 at http://www.epa.gov/ttn/chief/ap42/ch13/final/c13s0204.pdf

Appendix A6

AP-42 Section 1.4 Natural Gas Combustion

1.4 Natural Gas Combustion

1.4.1 General[1-2]

Natural gas is one of the major combustion fuels used throughout the country. It is mainly used to generate industrial and utility electric power, produce industrial process steam and heat, and heat residential and commercial space. Natural gas consists of a high percentage of methane (generally above 85 percent) and varying amounts of ethane, propane, butane, and inerts (typically nitrogen, carbon dioxide, and helium). The average gross heating value of natural gas is approximately 1,020 British thermal units per standard cubic foot (Btu/scf), usually varying from 950 to 1,050 Btu/scf.

1.4.2 Firing Practices[3-5]

There are three major types of boilers used for natural gas combustion in commercial, industrial, and utility applications: watertube, firetube, and cast iron. Watertube boilers are designed to pass water through the inside of heat transfer tubes while the outside of the tubes is heated by direct contact with the hot combustion gases and through radiant heat transfer. The watertube design is the most common in utility and large industrial boilers. Watertube boilers are used for a variety of applications, ranging from providing large amounts of process steam, to providing hot water or steam for space heating, to generating high-temperature, high-pressure steam for producing electricity. Furthermore, watertube boilers can be distinguished either as field erected units or packaged units.

Field erected boilers are boilers that are constructed on site and comprise the larger sized watertube boilers. Generally, boilers with heat input levels greater than 100 MMBtu/hr, are field erected. Field erected units usually have multiple burners and, given the customized nature of their construction, also have greater operational flexibility and NO_x control options. Field erected units can also be further categorized as wall-fired or tangential-fired. Wall-fired units are characterized by multiple individual burners located on a single wall or on opposing walls of the furnace while tangential units have several rows of air and fuel nozzles located in each of the four corners of the boiler.

Package units are constructed off-site and shipped to the location where they are needed. While the heat input levels of packaged units may range up to 250 MMBtu/hr, the physical size of these units are constrained by shipping considerations and generally have heat input levels less than 100 MMBtu/hr. Packaged units are always wall-fired units with one or more individual burners. Given the size limitations imposed on packaged boilers, they have limited operational flexibility and cannot feasibly incorporate some NO_x control options.

Firetube boilers are designed such that the hot combustion gases flow through tubes, which heat the water circulating outside of the tubes. These boilers are used primarily for space heating systems, industrial process steam, and portable power boilers. Firetube boilers are almost exclusively packaged units. The two major types of firetube units are Scotch Marine boilers and the older firebox boilers. In cast iron boilers, as in firetube boilers, the hot gases are contained inside the tubes and the water being heated circulates outside the tubes. However, the units are constructed of cast iron rather than steel. Virtually all cast iron boilers are constructed as package boilers. These boilers are used to produce either low-pressure steam or hot water, and are most commonly used in small commercial applications.

Natural gas is also combusted in residential boilers and furnaces. Residential boilers and furnaces generally resemble firetube boilers with flue gas traveling through several channels or tubes with water or air circulated outside the channels or tubes.

1.4.3 Emissions[3-4]

The emissions from natural gas-fired boilers and furnaces include nitrogen oxides (NO_x), carbon monoxide (CO), and carbon dioxide (CO_2), methane (CH_4), nitrous oxide (N_2O), volatile organic compounds (VOCs), trace amounts of sulfur dioxide (SO_2), and particulate matter (PM).

Nitrogen Oxides -

Nitrogen oxides formation occurs by three fundamentally different mechanisms. The principal mechanism of NO_x formation in natural gas combustion is thermal NO_x. The thermal NO_x mechanism occurs through the thermal dissociation and subsequent reaction of nitrogen (N_2) and oxygen (O_2) molecules in the combustion air. Most NO_x formed through the thermal NO_x mechanism occurs in the high temperature flame zone near the burners. The formation of thermal NO_x is affected by three furnace-zone factors: (1) oxygen concentration, (2) peak temperature, and (3) time of exposure at peak temperature. As these three factors increase, NO_x emission levels increase. The emission trends due to changes in these factors are fairly consistent for all types of natural gas-fired boilers and furnaces. Emission levels vary considerably with the type and size of combustor and with operating conditions (e.g., combustion air temperature, volumetric heat release rate, load, and excess oxygen level).

The second mechanism of NO_x formation, called prompt NO_x, occurs through early reactions of nitrogen molecules in the combustion air and hydrocarbon radicals from the fuel. Prompt NO_x reactions occur within the flame and are usually negligible when compared to the amount of NO_x formed through the thermal NO_x mechanism. However, prompt NO_x levels may become significant with ultra-low-NO_x burners.

The third mechanism of NO_x formation, called fuel NO_x, stems from the evolution and reaction of fuel-bound nitrogen compounds with oxygen. Due to the characteristically low fuel nitrogen content of natural gas, NO_x formation through the fuel NO_x mechanism is insignificant.

Carbon Monoxide -

The rate of CO emissions from boilers depends on the efficiency of natural gas combustion. Improperly tuned boilers and boilers operating at off-design levels decrease combustion efficiency resulting in increased CO emissions. In some cases, the addition of NO_x control systems such as low NO_x burners and flue gas recirculation (FGR) may also reduce combustion efficiency, resulting in higher CO emissions relative to uncontrolled boilers.

Volatile Organic Compounds -

The rate of VOC emissions from boilers and furnaces also depends on combustion efficiency. VOC emissions are minimized by combustion practices that promote high combustion temperatures, long residence times at those temperatures, and turbulent mixing of fuel and combustion air. Trace amounts of VOC species in the natural gas fuel (e.g., formaldehyde and benzene) may also contribute to VOC emissions if they are not completely combusted in the boiler.

Sulfur Oxides -

Emissions of SO_2 from natural gas-fired boilers are low because pipeline quality natural gas typically has sulfur levels of 2,000 grains per million cubic feet. However, sulfur-containing odorants are added to natural gas for detecting leaks, leading to small amounts of SO_2 emissions. Boilers combusting unprocessed natural gas may have higher SO_2 emissions due to higher levels of sulfur in the natural gas. For these units, a sulfur mass balance should be used to determine SO_2 emissions.

Particulate Matter -

Because natural gas is a gaseous fuel, filterable PM emissions are typically low. Particulate matter from natural gas combustion has been estimated to be less than 1 micrometer in size and has filterable and condensable fractions. Particulate matter in natural gas combustion are usually larger molecular weight hydrocarbons that are not fully combusted. Increased PM emissions may result from poor air/fuel mixing or maintenance problems.

Greenhouse Gases -[6-9]

CO_2, CH_4, and N_2O emissions are all produced during natural gas combustion. In properly tuned boilers, nearly all of the fuel carbon (99.9 percent) in natural gas is converted to CO_2 during the combustion process. This conversion is relatively independent of boiler or combustor type. Fuel carbon not converted to CO_2 results in CH_4, CO, and/or VOC emissions and is due to incomplete combustion. Even in boilers operating with poor combustion efficiency, the amount of CH_4, CO, and VOC produced is insignificant compared to CO_2 levels.

Formation of N_2O during the combustion process is affected by two furnace-zone factors. N_2O emissions are minimized when combustion temperatures are kept high (above 1475°F) and excess oxygen is kept to a minimum (less than 1 percent).

Methane emissions are highest during low-temperature combustion or incomplete combustion, such as the start-up or shut-down cycle for boilers. Typically, conditions that favor formation of N_2O also favor emissions of methane.

1.4.4 Controls[4,10]

NO_x Controls -

Currently, the two most prevalent combustion control techniques used to reduce NO_x emissions from natural gas-fired boilers are flue gas recirculation (FGR) and low NO_x burners. In an FGR system, a portion of the flue gas is recycled from the stack to the burner windbox. Upon entering the windbox, the recirculated gas is mixed with combustion air prior to being fed to the burner. The recycled flue gas consists of combustion products which act as inerts during combustion of the fuel/air mixture. The FGR system reduces NO_x emissions by two mechanisms. Primarily, the recirculated gas acts as a dilutent to reduce combustion temperatures, thus suppressing the thermal NO_x mechanism. To a lesser extent, FGR also reduces NO_x formation by lowering the oxygen concentration in the primary flame zone. The amount of recirculated flue gas is a key operating parameter influencing NO_x emission rates for these systems. An FGR system is normally used in combination with specially designed low NO_x burners capable of sustaining a stable flame with the increased inert gas flow resulting from the use of FGR. When low NO_x burners and FGR are used in combination, these techniques are capable of reducing NO_x emissions by 60 to 90 percent.

Low NO_x burners reduce NO_x by accomplishing the combustion process in stages. Staging partially delays the combustion process, resulting in a cooler flame which suppresses thermal NO_x formation. The two most common types of low NO_x burners being applied to natural gas-fired boilers are staged air burners and staged fuel burners. NO_x emission reductions of 40 to 85 percent (relative to uncontrolled emission levels) have been observed with low NO_x burners.

Other combustion control techniques used to reduce NO_x emissions include staged combustion and gas reburning. In staged combustion (e.g., burners-out-of-service and overfire air), the degree of staging is a key operating parameter influencing NO_x emission rates. Gas reburning is similar to the use of overfire in the use of combustion staging. However, gas reburning injects additional amounts of natural gas in the upper furnace, just before the overfire air ports, to provide increased reduction of NO_x to NO_2.

Two postcombustion technologies that may be applied to natural gas-fired boilers to reduce NO_x emissions are selective noncatalytic reduction (SNCR) and selective catalytic reduction (SCR). The SNCR system injects ammonia (NH_3) or urea into combustion flue gases (in a specific temperature zone) to reduce NO_x emission. The Alternative Control Techniques (ACT) document for NO_x emissions from utility boilers, maximum SNCR performance was estimated to range from 25 to 40 percent for natural gas-fired boilers.[12] Performance data available from several natural gas fired utility boilers with SNCR show a 24 percent reduction in NO_x for applications on wall-fired boilers and a 13 percent reduction in

NO_x for applications on tangential-fired boilers.[11] In many situations, a boiler may have an SNCR system installed to trim NO_x emissions to meet permitted levels. In these cases, the SNCR system may not be operated to achieve maximum NO_x reduction. The SCR system involves injecting NH_3 into the flue gas in the presence of a catalyst to reduce NO_x emissions. No data were available on SCR performance on natural gas fired boilers at the time of this publication. However, the ACT Document for utility boilers estimates NO_x reduction efficiencies for SCR control ranging from 80 to 90 percent.[12]

Emission factors for natural gas combustion in boilers and furnaces are presented in Tables 1.4-1, 1.4-2, 1.4-3, and 1.4-4.[11] Tables in this section present emission factors on a volume basis (lb/10^6 scf). To convert to an energy basis (lb/MMBtu), divide by a heating value of 1,020 MMBtu/10^6 scf. For the purposes of developing emission factors, natural gas combustors have been organized into three general categories: large wall-fired boilers with greater than 100 MMBtu/hr of heat input, boilers and residential furnaces with less than 100 MMBtu/hr of heat input, and tangential-fired boilers. Boilers within these categories share the same general design and operating characteristics and hence have similar emission characteristics when combusting natural gas.

Emission factors are rated from A to E to provide the user with an indication of how “good” the factor is, with “A” being excellent and “E” being poor. The criteria that are used to determine a rating for an emission factor can be found in the Emission Factor Documentation for AP-42 Section 1.4 and in the introduction to the AP-42 document.

1.4.5 Updates Since the Fifth Edition

The Fifth Edition was released in January 1995. Revisions to this section are summarized below. For further detail, consult the Emission Factor Documentation for this section. These and other documents can be found on the Emission Factor and Inventory Group (EFIG) home page (http://www.epa.gov/ttn/chief).

Supplement D, March 1998

- Text was revised concerning Firing Practices, Emissions, and Controls.
- All emission factors were updated based on 482 data points taken from 151 source tests. Many new emission factors have been added for speciated organic compounds, including hazardous air pollutants.

July 1998 - minor changes

- Footnote D was added to table 1.4-3 to explain why the sum of individual HAP may exceed VOC or TOC, the web address was updated, and the references were reordered.

Table 1.4-1. EMISSION FACTORS FOR NITROGEN OXIDES (NO_x) AND CARBON MONOXIDE (CO) FROM NATURAL GAS COMBUSTION[a]

Combustor Type (MMBtu/hr Heat Input) [SCC]	NO_x[b]		CO	
	Emission Factor ($lb/10^6$ scf)	Emission Factor Rating	Emission Factor ($lb/10^6$ scf)	Emission Factor Rating
Large Wall-Fired Boilers (>100) [1-01-006-01, 1-02-006-01, 1-03-006-01]				
Uncontrolled (Pre-NSPS)[c]	280	A	84	B
Uncontrolled (Post-NSPS)[c]	190	A	84	B
Controlled - Low NO_x burners	140	A	84	B
Controlled - Flue gas recirculation	100	D	84	B
Small Boilers (<100) [1-01-006-02, 1-02-006-02, 1-03-006-02, 1-03-006-03]				
Uncontrolled	100	B	84	B
Controlled - Low NO_x burners	50	D	84	B
Controlled - Low NO_x burners/Flue gas recirculation	32	C	84	B
Tangential-Fired Boilers (All Sizes) [1-01-006-04]				
Uncontrolled	170	A	24	C
Controlled - Flue gas recirculation	76	D	98	D
Residential Furnaces (<0.3) [No SCC]				
Uncontrolled	94	B	40	B

[a] Reference 11. Units are in pounds of pollutant per million standard cubic feet of natural gas fired. To convert from $lb/10^6$ scf to $kg/10^6$ m^3, multiply by 16. Emission factors are based on an average natural gas higher heating value of 1,020 Btu/scf. To convert from $1b/10^6$ scf to lb/MMBtu, divide by 1,020. The emission factors in this table may be converted to other natural gas heating values by multiplying the given emission factor by the ratio of the specified heating value to this average heating value. SCC = Source Classification Code. ND = no data. NA = not applicable.

[b] Expressed as NO_2. For large and small wall fired boilers with SNCR control, apply a 24 percent reduction to the appropriate NO_X emission factor. For tangential-fired boilers with SNCR control, apply a 13 percent reduction to the appropriate NO_X emission factor.

[c] NSPS=New Source Performance Standard as defined in 40 CFR 60 Subparts D and Db. Post-NSPS units are boilers with greater than 250 MMBtu/hr of heat input that commenced construction modification, or reconstruction after August 17, 1971, and units with heat input capacities between 100 and 250 MMBtu/hr that commenced construction modification, or reconstruction after June 19, 1984.

TABLE 1.4-2. EMISSION FACTORS FOR CRITERIA POLLUTANTS AND GREENHOUSE GASES FROM NATURAL GAS COMBUSTION[a]

Pollutant	Emission Factor ($lb/10^6$ scf)	Emission Factor Rating
CO_2[b]	120,000	A
Lead	0.0005	D
N_2O (Uncontrolled)	2.2	E
N_2O (Controlled-low-NO_X burner)	0.64	E
PM (Total)[c]	7.6	D
PM (Condensable)[c]	5.7	D
PM (Filterable)[c]	1.9	B
SO_2[d]	0.6	A
TOC	11	B
Methane	2.3	B
VOC	5.5	C

[a] Reference 11. Units are in pounds of pollutant per million standard cubic feet of natural gas fired. Data are for all natural gas combustion sources. To convert from $lb/10^6$ scf to $kg/10^6$ m^3, multiply by 16. To convert from $lb/10^6$ scf to 1b/MMBtu, divide by 1,020. The emission factors in this table may be converted to other natural gas heating values by multiplying the given emission factor by the ratio of the specified heating value to this average heating value. TOC = Total Organic Compounds. VOC = Volatile Organic Compounds.

[b] Based on approximately 100% conversion of fuel carbon to CO_2. $CO_2[lb/10^6 \text{ scf}] = (3.67)(CON)(C)(D)$, where CON = fractional conversion of fuel carbon to CO_2, C = carbon content of fuel by weight (0.76), and D = density of fuel, 4.2×10^4 $lb/10^6$ scf.

[c] All PM (total, condensible, and filterable) is assumed to be less than 1.0 micrometer in diameter. Therefore, the PM emission factors presented here may be used to estimate PM_{10}, $PM_{2.5}$ or PM_1 emissions. Total PM is the sum of the filterable PM and condensible PM. Condensible PM is the particulate matter collected using EPA Method 202 (or equivalent). Filterable PM is the particulate matter collected on, or prior to, the filter of an EPA Method 5 (or equivalent) sampling train.

[d] Based on 100% conversion of fuel sulfur to SO_2. Assumes sulfur content is natural gas of 2,000 grains/10^6 scf. The SO_2 emission factor in this table can be converted to other natural gas sulfur contents by multiplying the SO_2 emission factor by the ratio of the site-specific sulfur content (grains/10^6 scf) to 2,000 grains/10^6 scf.

TABLE 1.4-3. EMISSION FACTORS FOR SPECIATED ORGANIC COMPOUNDS FROM NATURAL GAS COMBUSTION[a]

CAS No.	Pollutant	Emission Factor ($lb/10^6$ scf)	Emission Factor Rating
91-57-6	2-Methylnaphthalene[b, c]	2.4E-05	D
56-49-5	3-Methylchloranthrene[b, c]	<1.8E-06	E
	7,12-Dimethylbenz(a)anthracene[b,c]	<1.6E-05	E
83-32-9	Acenaphthene[b,c]	<1.8E-06	E
203-96-8	Acenaphthylene[b,c]	<1.8E-06	E
120-12-7	Anthracene[b,c]	<2.4E-06	E
56-55-3	Benz(a)anthracene[b,c]	<1.8E-06	E
71-43-2	Benzene[b]	2.1E-03	B
50-32-8	Benzo(a)pyrene[b,c]	<1.2E-06	E
205-99-2	Benzo(b)fluoranthene[b,c]	<1.8E-06	E
191-24-2	Benzo(g,h,i)perylene[b,c]	<1.2E-06	E
207-08-9	Benzo(k)fluoranthene[b,c]	<1.8E-06	E
106-97-8	Butane	2.1E+00	E
218-01-9	Chrysene[b,c]	<1.8E-06	E
53-70-3	Dibenzo(a,h)anthracene[b,c]	<1.2E-06	E
25321-22-6	Dichlorobenzene[b]	1.2E-03	E
74-84-0	Ethane	3.1E+00	E
206-44-0	Fluoranthene[b,c]	3.0E-06	E
86-73-7	Fluorene[b,c]	2.8E-06	E
50-00-0	Formaldehyde[b]	7.5E-02	B
110-54-3	Hexane[b]	1.8E+00	E
193-39-5	Indeno(1,2,3-cd)pyrene[b,c]	<1.8E-06	E
91-20-3	Naphthalene[b]	6.1E-04	E
109-66-0	Pentane	2.6E+00	E
85-01-8	Phenanathrene[b,c]	1.7E-05	D
74-98-6	Propane	1.6E+00	E

TABLE 1.4-3. EMISSION FACTORS FOR SPECIATED ORGANIC COMPOUNDS FROM NATURAL GAS COMBUSTION (Continued)

CAS No.	Pollutant	Emission Factor ($lb/10^6$ scf)	Emission Factor Rating
129-00-0	Pyrene[b, c]	5.0E-06	E
108-88-3	Toluene[b]	3.4E-03	C

[a] Reference 11. Units are in pounds of pollutant per million standard cubic feet of natural gas fired. Data are for all natural gas combustion sources. To convert from $lb/10^6$ scf to $kg/10^6$ m^3, multiply by 16. To convert from $1b/10^6$ scf to lb/MMBtu, divide by 1,020. Emission Factors preceeded with a less-than symbol are based on method detection limits.

[b] Hazardous Air Pollutant (HAP) as defined by Section 112(b) of the Clean Air Act.

[c] HAP because it is Polycyclic Organic Matter (POM). POM is a HAP as defined by Section 112(b) of the Clean Air Act.

[d] The sum of individual organic compounds may exceed the VOC and TOC emission factors due to differences in test methods and the availability of test data for each pollutant.

TABLE 1.4-4. EMISSION FACTORS FOR METALS FROM NATURAL GAS COMBUSTION[a]

CAS No.	Pollutant	Emission Factor ($lb/10^6$ scf)	Emission Factor Rating
7440-38-2	Arsenic[b]	2.0E-04	E
7440-39-3	Barium	4.4E-03	D
7440-41-7	Beryllium[b]	<1.2E-05	E
7440-43-9	Cadmium[b]	1.1E-03	D
7440-47-3	Chromium[b]	1.4E-03	D
7440-48-4	Cobalt[b]	8.4E-05	D
7440-50-8	Copper	8.5E-04	C
7439-96-5	Manganese[b]	3.8E-04	D
7439-97-6	Mercury[b]	2.6E-04	D
7439-98-7	Molybdenum	1.1E-03	D
7440-02-0	Nickel[b]	2.1E-03	C
7782-49-2	Selenium[b]	<2.4E-05	E
7440-62-2	Vanadium	2.3E-03	D
7440-66-6	Zinc	2.9E-02	E

[a] Reference 11. Units are in pounds of pollutant per million standard cubic feet of natural gas fired. Data are for all natural gas combustion sources. Emission factors preceeded by a less-than symbol are based on method detection limits. To convert from $lb/10^6$ scf to $kg/10^6$ m^3, multiply by l6. To convert from $lb/10^6$ scf to 1b/MMBtu, divide by 1,020.

[b] Hazardous Air Pollutant as defined by Section 112(b) of the Clean Air Act.

References For Section 1.4

1. *Exhaust Gases From Combustion And Industrial Processes*, EPA Contract No. EHSD 71-36, Engineering Science, Inc., Washington, DC, October 1971.

2. *Chemical Engineers' Handbook, Fourth Edition*, J. H. Perry, Editor, McGraw-Hill Book Company, New York, NY, 1963.

3. *Background Information Document For Industrial Boilers*, EPA-450/3-82-006a, U. S. Environmental Protection Agency, Research Triangle Park, NC, March 1982.

4. *Background Information Document For Small Steam Generating Units*, EPA-450/3-87-000, U. S . Environmental Protection Agency, Research Triangle Park, NC, 1987.

5. J. L. Muhlbaier, "Particulate and Gaseous Emissions From Natural Gas Furnaces and Water Heaters", *Journal Of The Air Pollution Control Association*, December 1981.

6. L. P. Nelson, *et al.*, *Global Combustion Sources Of Nitrous Oxide Emissions*, Research Project 2333-4 Interim Report, Sacramento: Radian Corporation, 1991.

7. R. L. Peer, *et al.*, *Characterization Of Nitrous Oxide Emission Sources*, Prepared for the U. S. EPA Contract 68-D1-0031, Research Triangle Park, NC: Radian Corporation, 1995.

8. S. D. Piccot, *et al.*, *Emissions and Cost Estimates For Globally Significant Anthropogenic Combustion Sources Of NO_x, N_2O, CH_4, CO, and CO_2*, EPA Contract No. 68-02-4288, Research Triangle Park, NC: Radian Corporation, 1990.

9. *Sector-Specific Issues and Reporting Methodologies Supporting the General Guidelines for the Voluntary Reporting of Greenhouse Gases under Section 1605(b) of the Energy Policy Act of 1992* (1994) DOE/PO-0028, Volume 2 of 3, U.S. Department of Energy.

10. J. P. Kesselring and W. V. Krill, "A Low-NO_x Burner For Gas-Fired Firetube Boilers", *Proceedings: 1985 Symposium On Stationary Combustion NO_x Control, Volume 2*, EPRI CS-4360, Electric Power Research Institute, Palo Alto, CA, January 1986.

11. *Emission Factor Documentation for AP-42 Section 1.4—Natural Gas Combustion*, Technical Support Division, Office of Air Quality Planning and Standards, U. S. Environmental Protection Agency, Research Triangle Park, NC, 1997.

12. *Alternate Control Techniques Document - NO_x Emissions from Utility Boilers*, EPA-453/R-94-023, U. S. Environmental Protection Agency, Research Triangle Park, NC, March 1994.

Appendix A7

Constituents of Kiln Condensate

Analysis of the Chemical Constituents of Dry-Kiln Condensate and its Technological Recovery – Part 1: Volatile Extractives

Jörn Rathke [a] and Daniel Stratev [b,c,*]

In Central Europe the main species that are used for the production of sawn wood are spruce, pine, and European beech. After the sawing process, the sawn timber is technically dried to a certain moisture content by means of condensation drying. The water movement in the cellular structure, which is caused by the drying process, draws some of the extractives into solution. In the process of kiln drying, hot air evaporates the water and the dissolved extractives. Some of the water condenses on the floor and the walls of the kiln, while the rest is blown out with the steam. Therefore, condensate was taken from the bottom of the kiln as well as from the energy recovery system. A chemical analysis by means of purge-and-trap showed the presence of volatiles that could be classified as typical for the wood materials from which they originated under the conditions of high temperature and high moisture content.

Keywords: Condensate; Extractives utilization; Dissolved VOC; European Beech, VOC; Kiln drying; Pine; Spruce; Purge-and-trap

Contact information: a: Department of Material Sciences and Process Engineering, Institute of Wood Science and Technology, BOKU – University of Natural Resources and Life Sciences, Konrad Lorenzstraße 24, AT-3430 Tulln an der Donau, Austria; b: Wood K plus – Competence Centre for Wood Composites and Wood Chemistry, Altenberger Straße 69, 4020 Linz, Austria; c: Institute of Chemical Engineering, Vienna University of Technology, Gumpendorfer Str. 1a, 1060 Vienna, Austria;
** Corresponding author: d.stratev@kplus-wood.at*

INTRODUCTION

Several factors have an influence on the utilization of renewable biomass for material products, energy, and fine and polymeric chemicals. These factors include economic, environmental, and practical interests (Sattler *et al.* 2008). Economically, the forest products industry is in need of new products, as margins have been slashed in the last few years due to global competition and subsidized large-scale factories. From an environmental perspective, wood is a "green" source for solid materials, fuel, and chemical products. The practical interest involves the opportunity to replace petroleum-derived polymers with polymers produced from natural resources. Today, most of these bio-based polymers are produced from starch, leading to competition with food and animal feed markets (Schmidt and Padukone 1997; Parajo *et al.* 1996).

All over the world, governments are mandating stringent restraints on the emission of volatile organic compounds (Zwick *et al.* 1997). These emissions are produced, for example, during timber drying. One possibility for reducing emissions caused by timber drying is vacuum drying technology. Using this technology, the moisture as well as the volatile components can be condensed into liquid effluent (McDonald *et al.* 1999a). The drying process starts a complex reaction chain in the wood

structure. Volatilization, steam distillation, thermal degradation, and/or hydrolysis initiate the release of a combination of chemical compounds (Cronn *et al.* 1983; McDonald and Wastney 1995; Fraser and Swan 1972; Roffael 1987). The organic extractives emitted during the kiln drying process are said to include primarily terpenes, methanol, acetic acid, formaldehyde, resin acids, and fatty acids (McDonald *et al.* 1999b). The emitted water vapor mixture may be cause for environmental concern (Cronn *et al.* 1983). McDonald and Wastney conducted a study in 1995 to analyze kiln emissions from conventional kiln drying of Radiata pine, but they did not find hazardous emissions.

Extractives from wood originate mainly in the resin, which dissolves in organic solvents and various hydrocarbons (Kärki and Väätäinen 2004). In coniferous wood, resin of two kinds can be found: physiologic resin of healthy wood and pathologic resin as a consequence of damage or infection. While physiologic resin consists of fats, waxes, and alcohols, pathologic resin contains resin acids and terpenes (Voipo and Laasko 1992). The extractives of wood that dissolve in organic solvents are aliphatic hydrocarbons, alcohols, fatty acids, terpenes, resin acids, sterols, and waxes. Extractives that dissolve in water include phenols, mono- and dimeric sugar derivates, pectin, and tannin. The proportion of extractives in wood most commonly ranges from 2 to 5% (Fengel and Wegener 2003). The extractives are located in specific morphological places in the wood structure. Resin, for instance, is located in resin canals, while waxes and fats are stored in parenchyma cells. Phenols are mainly found in heartwood and in the bark. All of these components are needed to enable the biological functions of the tree. Fats, for example, are a source of energy, while phenols, resins, and terpenes protect the tree from microbiological damage. All these components are washed out from the wood structure and are to some extent evaporated during the wood drying process. For this reason, the extractives are present in the air of the kiln (as well as in the condensed liquid collected in the kiln).

One way to reduce emissions is to condense their volatile parts and to use the liquid-bound extractives for technical purposes. A number of studies have been performed to investigate the composition of the condensates that accumulate during the process of vacuum kiln drying. Bucko *et al.* (1993) identified formic acid, acetic acid, levulinic acid, furfural, hydroxymethyl-furfural, formaldehyde, and acetaldehyde from the kiln-dried condensate of ash (*Fraxinus excelsior*), beech (*Fagus sylvatica*), and oak (*Quercus* spp.). A chemical analysis of the condensate of *Pinus radiata* generated from experimental vacuum kiln-drying was performed by Pervan and Draščić (2008). In their study, the condensate was sampled at regular time intervals throughout the total drying cycle. A chemical analysis of the green timber led to the conclusion that only 10% of the monoterpenes found in the wood structure could be recovered in the kiln condensate. In another study, Bicho *et al.* (1996) partially analyzed the condensates from Douglas fir (*Pseudotsuga menziesii*), Western red-cedar (*Thuja plicata*), and Western hemlock (*Tsuga heterophylla*). The condensates were obtained through radio-frequency-vacuum drying. Kärki and Väätäinen (2004) investigated the extractives from European aspen wood (*Populus tremula*) after high temperature drying. In their study, the extractive content in the wood mass depending on its position in the tree was examined, rather than the extractive content of the condensate. No significant differences between the extractive contents in different sample locations in the tree were found. However, a significant difference was found between the extractive contents of the heartwood and sapwood. The condensate from the steaming process of beech timber was analyzed by Ledig *et al.* (2003). In their study, only cumulative values of the components (*e.g.*, phenols and

saccharides) were determined, and these values reflected a higher degree of extractives for indirect steaming than for direct steaming.

Only one study was found that dealt with the condensate analysis of kiln-dried spruce wood (*Picea abies*) (Dejmal and Zejda 2008). This study was performed according to the accredited method SOA-16. However, only spruce wood was analyzed, and the chemical compounds were not investigated precisely. In the present study, the condensates from spruce, beech, and a mixture of spruce and pine (common for packaging material) were obtained and analyzed precisely by means of purge-and-trap followed by gas chromatography-mass spectroscopy (GC/MS) analysis. A technological solution for the recovery of condensate was given. In addition to the chemical compound analysis, the prices of these compounds were researched, and thus, a rough investment cost analysis for the technological recovery of the condensate was generated.

EXPERIMENTAL

Condensate Preparation and Storage

Condensate samples were selected from an Austrian softwood sawmill as well as from a German hardwood sawmill. They included samples of spruce (*Picea abies*), a pine/spruce mixture (*Picea abies* and *Pinus sylvestris*), and European beech (*Fagus sylvatica*). The samples were collected at the first stage of the kiln drying cycle from 3 dryer charges, which had a peak temperature of 77 °C for spruce, 72 °C for pine/spruce, and 65 °C for beech. From each of three dryer charges, two 500-mL samples were taken at the first stage of the kiln drying cycle. The condensates were stored in amber glass bottles at 4 °C and periodically examined for changes in pH value. No change in pH was noted in any of the condensates during storage.

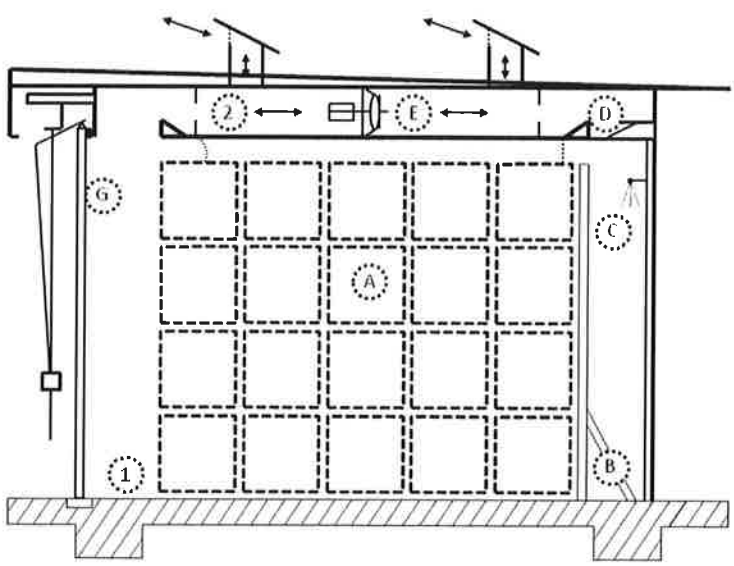

Fig. 1. Sectional drawing of a kiln with timber packages (A), stand (B), water spraying (C), damper register (D), and fan (E). Specimens were taken from the bottom (1) and from the intermediate ceiling (2).

The condensate samples were selected during the timber drying process from the bottom of the kiln (1) and from the intermediate ceiling (2), as can be seen in Fig. 1. The specimens were stored at 4 °C before the analysis process was begun.

Analysis of Condensate

Forty milliliters of each condensate was poured into a 40-mL clear glass screw vial (Sigma) and was subjected to purge-and-trap, by means of a homemade installation (Fig. 2) at 60 °C for 2 h, using technical air (hydrocarbon-free, Linde) as a purge gas and 200 mg of conditioned Tenax TA (60- to 80-mesh, Sigma) in TDAS 2000 glass tubes (Chromtech) as a sorbent. To reduce the temperature of the sorbent, the installation was put into a Binder KB 115 cooled chamber at 23 °C. After the sorption step had taken place, the Tenax tubes were spiked with 1 µL of a 0.373 µg/µL methanol dilution of toluene-d_8 (Sigma) per tube as an internal standard (ISTD) and rinsed for 30 min at 23 °C with dry technical air (Linde gas) to reduce the water content in the sorbent. The air mass flow during the steps described above was set to 6 mL/min. The sorbent tubes were then thermally desorbed using a TDAS 2000 thermal desorption unit (Chromtech) coupled with a programmed temperature vaporizing (PTV) injector of an Agilent 7890A/5975C GC/MS. The analytes were desorbed at 250 °C for 5 min and cryo-focused in the PTV injector at -15 °C. The PTV injector was then heated to 280 °C at its maximum rate, and the analytes were separated on an HP-PONA methyl siloxane column (50 m x 0.2 mm x 0.5 mm, Agilent) using helium as the carrier gas in the velocity range of 25 to 30 cm s^{-1} and using the following oven temperature program: 3 min at 35 °C, then increased to 160 °C at 10 °C min^{-1}, and finally increased to 310 °C at 20 °C min^{-1}. The PTV injector was operated in split mode at a split of 30:1. The MS detector was set to scan over a m/z range of 12 to 400. The individual compounds were identified using a database with a spectra of wood-specific substances (Wood K plus). The concentrations of the identified volatile organic compounds (VOC) were then calculated in toluene equivalents.

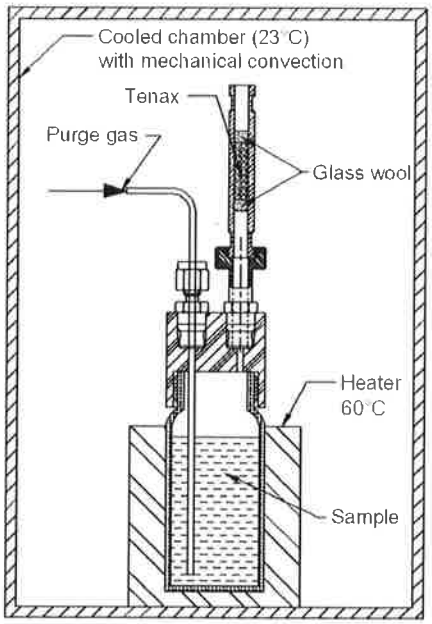

Fig. 2. Homemade purge and-trap installation

Purge-and-Trap Method Evaluation

To evaluate the average recovery rate and the quantification limit of the purge-and-trap method, a C6 to C14 alkane mixture was prepared by injecting 5 μL from each alkane in 955 μL of acetone. Twenty microliters of the solution were diluted with methanol in a ratio of 1:50, and 1 μL of the diluted solution was injected in 35 mL of deionized water. Finally, the mixture was analyzed according to the procedure described in the previous section (Analysis of Condensate). One microliter of the same methanol-acetone alkane mixture and 1 μL of ISTD were directly spiked in a Tenax tube and rinsed with dry technical air at 6 mL/min for 30 min. The areas of the GC/MS peaks of the alkanes, revealed by means of purge-and-trap as well as by direct injection, were divided by the corresponding area of the ISTD peak. These normalized areas were used for calculating the recovery rates in the alkane range of C6 to C14. It should be pointed out that the retention indices (RIs) of the C6 to C14 alkanes to a great extent covered the range of the RIs (not shown) of the detected substances in the condensate. The theoretical limits of quantization (LOQ) were calculated by dividing the known alkane concentrations in the deionized water solution by one tenth of the signal-to-noise ratios (S/N), determined from the Agilent MSD Chemstation software using "total ion concentration" as the signal (TIC).

Technological Implementation of Condensate Recovery

Conventional timber drying uses 60 to 95 °C warm air, which circulates through the timber packages. The timber packages are stacked with spacers to enable airflow. The kiln climate is controlled by venting the hot air and replacing it with ambient air. Thus, a drying program can be adapted according to the characteristics of the kiln load, *e.g.*, species, dimensions, and moisture content. In Fig. 3, a simplified transverse section of a kiln chamber with an energy recovery and dehumidification system is shown. The air, which is heated by the damper register (D) and circulated through the kiln by fans (E), heats the timber (A) and carries away the evaporated moisture and VOCs from the wood.

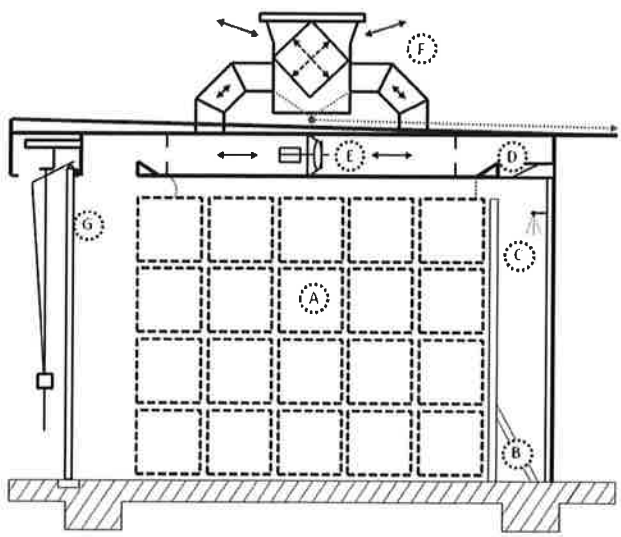

Fig. 3. Sectional drawing of a kiln chamber with timber packages (A), stand (B), water spraying (C), damper register (D), fan (E), and heat exchange device where condensate is ideally recovered (F); see red line.

The dehumidification unit of the kiln dries the wood in a closed system. This means that the dehumidification system condenses only as much moisture from the air as is necessary to generate the required relative humidity needed for the optimal drying process. The heat removed in the condensing procedure is returned to the kiln, with the fresh air coming in through a recuperator. The air flows over the lamella of the heat exchange unit, and the energy is transmitted into the incoming air while the condensed air moisture drops down and is collected at the bottom of the dehumidification unit, where it can be acquired for technical purposes.

The main disadvantages of the dehumidification unit are the high installation costs, as well as the higher operational and maintenance costs. The energy savings can compensate for part of these additional costs. However, in Millar's work (2006), the feasibility of using one dehumidification unit for the condensate recovery was examined. In that study, the VOC concentration in the kiln atmosphere was in the range of 10 ppm and was described as significantly lower than that of conventional kilns. This confirms the possibility of using dehumidification units for the recovery of chemical compounds released from wood during the drying process.

RESULTS AND DISCUSSION

Condensate Characteristics (Volatile Extractives)

Before analysis was performed, the condensate liquids were visually inspected. The condensates of softwood were of various shades of orange to orange-brown, while the beech condensates were brownish in color and contained suspended particles. The cumulative condensate characteristics of European beech, spruce, and the spruce/pine mixture are summarized in Table 1.

Feasibility of Using Condensate for Technological Purposes

In Table 2, the chemical components of the condensates are listed on the basis of Table 1. Here, the volatile extract value per m^3 of condensate has been calculated depending on the amount and the price of the volatile organic components found in the liquid. The market prices were acquired from the catalog of one of the largest research chemical suppliers. For the extract value calculation, only 20% of the chemical prices were used due to the fact that processing costs, transportation costs, and sales costs must be included. The recovery rates (Table 4) were also considered when calculating the prices. The individual percentage contributions of the volatile compounds to the total extract value are also listed in Table 2.

The condensate that was collected during the industrial kiln drying processes contained the following volatile organic compounds: (i) terpenoids, (ii) ketones, (iii) alcohols, and (iv) traces of aldehydes and aromatic compounds. Small traces of benzene were found in the spruce condensate, but the concentrations were below the regulated limits. An interesting observation was that the fractions of alcohols and ketones were much higher than their usual fractions detected by direct emission determination of the corresponding dry wood materials (Hyttinen *et al.* 2010). This fact could be explained with the higher solubility of polar ketones and alcohols in water than terpenes which leads to their selective concentration in the condensate. High temperatures and moisture content during the drying process should also contribute for the oxidation of the monoterpenes.

Table 1. Characteristics of Condensates from Three European Species

Substances	Concentration [mg/m³]		
	Beech	Spruce	Spruce/Pine
Total Volatile Extract	**21.4**	**58.2**	**72.1**
2-Butanone	4.6	1.6	9.9
Ethyl acetate	0.0	0.0	2.0
Butanol	0.0	1.1	0.4
Benzene	0.0	0.8	0.0
Isopropyl nitrate	0.0	2.4	0.0
2-Pentanone	1.9	0.9	5.9
1-Pentanol	0.0	4.7	6.6
Toluene	0.2	0.8	0.9
Hexanal	0.9	0.8	1.9
1-Hexanol	0.1	2.7	2.3
3-Heptanone	1.5	0.0	0.1
2-Heptanone	1.4	1.1	1.4
2-Heptanol	1.5	0.0	0.0
α-Pinene	0.3	11.3	0.3
3-Octanone	0.0	0.1	3.2
2-Octanone	2.3	0.1	1.2
2-Octanol	3.3	0.0	0.0
β-Pinene	0.0	7.7	0.6
2-Ethylhexanol	0.1	0.9	0.0
delta-3-Carene	1.3	6.8	0.4
Limonene	0.0	7.6	0.2
Fenchone	0.0	0.8	3.5
Fenchol	0.0	0.7	3.2
Camphor	0.3	0.4	7.5
Pinocamphone	0.0	0.0	2.1
Isopinocamphone	0.8	0.0	7.7
Terpinen-4-ol	0.1	0.7	2.9
α-Terpineol	0.4	1.9	4.6
Verbenone	0.0	0.1	2.6
Tridecane	0.3	0.2	0.3
Sesquiterpenoids	0.0	2.0	0.5

By using a different analytical technique (SPME) and much shorter condensate-gathering time (only four hours), Dejmal and Zejda (2008) also showed that the fraction of hydroxylated and oxidized terpenoids in condensate is much higher than that of the softwood characteristic monoterpenes like alpha- and beta-Pinene, 3-Carene, and Limonene.

Table 1 shows that there were significant differences between the volatile contents of the three condensates. As expected, the concentrations of monoterpenes (such as alpha-pinene and 3-carene) in the spruce condensate were higher than those detected in the European beech condensate. Unexpectedly, the detected concentrations of mono-terpenes in the spruce/pine condensate were much lower compared to spruce. It is possible that monoterpenes emitted during spruce/pine drying were oxidized/ hydroxylated at higher rates to keto- and hydroxy- terpenoids such as fenchone, fenchol, camphor, pinocamphone, isopinocamphone, terpinen-4-ol, and verbenone. These terpenoids were detected in higher concentrations in the spruce/pine- condensate.

Table 2. Prices for Chemical Components

Substances	Substance contribution to the total extract value [%]		
	European Beech	Spruce	Spruce/ Pine
Extractives value [EUR/1000 m³]	**0.59**	**2.13**	**3.61**
2-Butanone	**10.6%**	1.1%	3.8%
Ethyl acetate	0.0%	0.0%	0.6%
Butanol	0.0%	0.8%	0.2%
Benzene	0.0%	0.8%	0.0%
Isopropyl nitrate	0.0%	3.4%	0.0%
2-Pentanone	4.7%	0.6%	2.4%
1-Pentanol	0.0%	6.0%	5.0%
Toluene	0.4%	0.5%	0.3%
Hexanal	2.7%	0.6%	0.9%
1-Hexanol	0.1%	0.9%	0.5%
3-Heptanone	**16.2%**	0.0%	0.2%
2-Heptanone	3.4%	0.8%	0.6%
2-Heptanol	**10.8%**	0.0%	0.0%
α-Pinene	3.2%	**30.6%**	0.5%
3-Octanone	0.0%	0.2%	3.3%
2-Octanone	5.0%	0.1%	0.4%
2-Octanol	5.1%	0.0%	0.0%
β-Pinene	0.0%	4.1%	0.2%
2-Ethylhexanol	0.2%	0.4%	0.0%
delta-3-Carene	8.1%	**11.7%**	0.4%
Limonene	0.0%	**9.5%**	0.2%
Fenchone	0.0%	0.9%	2.3%
Fenchol	0.0%	0.9%	2.4%
Camphor	1.9%	0.6%	7.3%
Pinocamphone	0.0%	0.0%	2.8%
Isopinocamphone	6.1%	0.0%	**9.9%**
Terpinen-4-ol	9.0%	**15.8%**	**41.6%**
α-Terpineol	1.2%	1.3%	2.0%
Verbenone	0.0%	0.4%	**10.0%**
Tridecane	**11.2%**	1.5%	1.5%
Sesquiterpenoids	0.0%	6.5%	0.9%

According to Table 2, a maximum value of 0.59 € per 1000 m³ of condensate could be gained from the beech condensate. For spruce, 2.13 € per 1000 m³ could be gained, while the mixture of spruce and pine was revealed to have the highest potential gains, at 3.61 € per 1000 m³, which is in all likelihood due to the high terpene content in pine. The calculation of the technological feasibility was based on the raw material revenue for each kiln drying cycle. The additional costs for the dehumidification unit were calculated, estimating 10,000 € for each kiln chamber.

The condensate that is generated is typically transported to waste, as no toxicity has been detected. In this study, the profitability of using the condensate as a chemical resource was analyzed.

Table 3 shows a number of parameters needed for the cost calculation, including density, moist weight, water content, and the revenue that would be generated per drying cycle and per year using the chemical compounds in the condensate.

Table 3. Physiological Parameters and Revenue Calculation

Parameter	European Beech	Spruce	Spruce/Pine
Dry density [kg/m³]	740	430	475*
Moist density [kg/m³]	1340	774	855
Water content [kg/m³]	600	344	380
Kiln dry capacity [m³]	180	300	300
Peak dryer temperature [°C]	65	77	72
Condensate pH Value	5	7	7
Total water content [t]	108	103	114
Number of cycles [p.a]	13	70	70
Revenue per cycle [€]	0.06	0.22	0.41
Revenue per year [€]	1	15	29
* Average			

Green timber has an average wood moisture content (calculated based on dry weight) of 80%, which indicates a corresponding water content of approximately 45%. In Central Europe, hardwood is most often dried unedged, while softwood is edged or already sawn into dimensions. In addition to the shape of the boards, the drying time is also quite varied. Normally, it takes about five days to dry softwood timber, while hardwood requires at least four weeks. Assuming 350 production days for the kiln, 13 dying cycles can be accomplished with hardwood timber, and 70 with softwood, due to the longer drying cycles of hardwood (European beech). The two sawmills from which the condensate was obtained operated with kiln capacities of approximately 300 m³ for the softwood kiln and 180 m³ for the hardwood kiln. According to the calculations that were made, the revenue that could be generated from the volatile extractives by drying hardwood is 0.06 € per drying cycle.

Method Evaluation

The theoretical limits of the quantification (Table 4) were higher than the detection limits reported by Rosell *et al.* (2003), but taking into account the potential for further reductions in the split ratio, the overall sensitivity of the current P&T method should be slightly higher.

Table 4. C6 to C14 Recovery Rates and Theoretical Limits of Quantification

Alcane	Concentration [µg/L]	Recovery rate	LOQ by split 30:1 [ng/L]	S/N (TIC)
C6	1.87	73%	319	59
C7	1.94	102%	203	96
C8	2.01	94%	98	205
C9	2.05	87%	73	280
C10	2.09	86%	56	371
C11	2.11	76%	60	352
C12	2.23	67%	47	476
C13	2.16	48%	107	202
C14	2.16	54%	296	73
Average	**2.07**	**76%**	**140**	**235**

However, the substances used for the LOQ detection were not identical to those used by Rosell *et al.* (2003). The recovery rates in the range of C7 to C14 decreased, as expected, due to the decrease in the VOC volatility. The recovery rate of hexane was unexpectedly lower than that of heptane, but this could be explained by its loss (due to higher volatility) during the preparation steps before trapping took place.

CONCLUSIONS

According to the findings presented, the recovery of the volatile fraction (of dry-kiln condensate) alone with the help of dehumidification unit is not economically reasonable. Only the combination of extractive recovery combined with energy recovery systems seem to be economically viable. It is of further interest whether the inclusion of nonvolatile condensate extractives in the equation could contribute for making recovery more profitable.

ACKNOWLEDGMENTS

The support from the sawmills Schaffer in Eppenstein, Austria and B. Keck GmbH in Ehningen, Germany as well as the language support by Cornelia Riegler are gratefully acknowledged by the authors.

REFERENCES CITED

Bicho, P. A., Chen, T., Avramidis, S., Zwick, R. L., Breuil, C., and Saddler, J. N. (1996). "Characterisation and treatment of condensates generated from softwoods that have been radio-frequency/vacuum kiln dried," *Forest Products Journal* 46(10), 51-56.

Bucko, J., Baloghová, D., and Kacik, F. (1993). "Chemical characteristic of hardwood subjected to vacuum drying," In: *Proceedings of the International Conference on Wood Drying; Vacuum Drying of Wood 93*. Slovakia, September 27-30, 199-205.

Cronn, D. R., Truitt, S. G., and Campbell, M. J. (1983). "Chemical characterization of plywood veneer dryer emissions," *Atmospheric Environment* 17(2), 201-211.

Dejmal, A., and Zejda, J. (2008). "The analysis of condensate fluid from wood drying in the condensation drying kiln," *Acta Universitatis Agriculturae et Silviculturae Mendelianae Brunensis* 56(5), 31-37.

Fengel, D., and Wegener, G. (2003). "Extractives," in: *Wood: Chemistry, Ultrastructure, Reactions*, Kessel Verlag, Berlin.

Fraser, H. S., and Swan, E. P. (1972). Chemical analysis of veneer-dryer condensates. Canada Forest Service Western Products Laboratory, *Information Report VP-X-101*.

Hyttinen, M., Masalin-Weijo, M., Kalliokoski, P., & Pasanen, P. (2010). "Comparison of VOC emissions between air-dried and heat-treated Norway spruce (Picea abies), Scots pine (*Pinus sylvesteris*) and European aspen (*Populus tremula*) wood," *Atmospheric Environment* 44(38), 5028-5033.

Kärki, T., and Väätäinen, J. (2004). "Extractive content of European aspen (*Populus tremula)* wood after high-temperature drying," *Baltic Forestry* 2(19), 39-45.

Ledig, S. F., Slavik, I., and Broege, M. (2003). "Characterization and treatment of the condensate generated from steaming of beech timber prior to kiln-drying," in: *Proceedings of the 8th International IUFRO Wood Drying Conference*, Brasov, Romania, 24-29. August 2003, 231-236.

McDonald, A. G., and Wastney, S. (1995). "Analysis of volatile emissions from kiln drying of radiate pine," in: *Proceedings of the 8th International Symposium of Wood and Pulping Chemistry*, Helsinki, June 6-9, III, 431-436.

McDonald, A. G., Steward, D., and Franch, R. A. (1999a). "Monoterpene composition of radiata pine (*Pinus radiata* D.Don) sapwood from a 13 year old progeny trial," *Holz als Roh- und Werkstoff* 57, 301-302.

McDonald, A. G., Gifford, J. S., Dare, P. H., and Steward, D. (1999b). "Characterization of the condensate generated from vacuum-drying of radiate pine wood," *Holz als Roh- und Werkstoff* 57(4), 251-258.

Millar, S. (2006). "Recent upgrades to dehumidification kilns to dry softwood lumber," *AMEC* 42-50.

Parajo, J., Alonso, J., and Santos, V. (1996). "Lactic acid from wood," *Process Biochem.* 31(3), 271.

Pervan, S., and Draščić, G. (2008). "Ecological issues of byproducts in hydrothermal wood processing," *Drvna Industrija* 59(1), 29-34

Roffael, E. (1987). "Drying of pine particles and the effect on the strength of particle board," In: *Proceedings of the Washington State University Particleboard Symposium*, 21, 361-381.

Rosell, M., Lacorte, S., Ginebreda, A., and Barcelo, D. (2003). "Simultaneous determination of methyl tert.-butyl ether and its degradation products, other gasoline oxygenates and benzene, toluene, ethylbenzene and xylenes in Catalonian groundwater by purge-and-trap-gas chromatography-mass spectrometry," *J Chromatogr. A* 995(1-2), 171-84.

Sattler, C., Labbé, N., Harper, D., Elder, T., and Rials, T. (2008). "Effects of hot water extraction on physical and chemical characteristics of oriented strand board (OSB) wood flakes," *Clean* 36(8), 674-681.

Schmidt, S., and Padukone, N. (1997). "Production of lactic acid from wastepaper as a cellulosic feedstock," *J. Ind. Microbiology and Biotechnology* 18(1), 10-14.

Voipo, R. and Laasko, T. (1992). "The chemical composition of the biomass of small-sized trees," *Folia Forestalia* 789, 21.

Zwick, R. L., Bicho, P. A., Avramidis, S., Chen, T., Breuil, C., and Saddler, J. N. (1997). "Effluent from radio frequency/vacuum drying of softwoods: Characterization and treatment," *WDKA* 53-63.

Article submitted: July 3, 2013; Peer review completed: August 10, 2013; Revised version received: September 16, 2013; Accepted: September 19, 2013; Published September 26, 2013; Paper updated with corrections: November 8, 2013.

Appendix B

Cyclofilter Manufacturer Specifications

RODRIGUE METAL LTEE
Division: RODAIR
1890, 1ère Rue Centre Industriel
St-Romuald (Québec) G6W 5M6
TEL: (418) 839-0400 **ext. 231**
FAX: (418) 839-0201
EMAIL: gilles.beaudry@rodriguemetal.com

PROPOSAL : FS - 11562 – 1 - 2016

ESTIMATOR: GILLES BEAUDRY
Sales and design manager

CUSTOMER: COMACT BID GROUP

DATE: 2016/03/31 **SHEET:** 1 of 6

MR : STÉPHANE POIRIER

ITEM	DESCRIPTION

SHAVING COLLECTION SYSTEM

Technical specifications :
- woods species : Yellow pine
- design capacity with 2 x 8 wood size :
    - wood size before planer : 1.68 x 7.68
    - wood size after planer : 1.50 x 7.50
    - planer speed : 2500 ft/min
- solid dry wood density : 30 lbs/cu.ft.
- shaving density : 2.25 lbs/cu.ft.
- planer capacity :
    - (1.68 x 7.68 ÷ 144) - (1.50 x 7.50 ÷ 144) x 2500 x 60 = 1725 ft3/hour solid wood
    - 1725 ft3/hour x 30 lbs/ft3 = 51750 lbs/hour
    - shavings volume : 51750 lbs/hour ÷ 2.25 lbs/ft3 = 23000 ft3/hour
- planer infeed table : 5 lbs/hour estimated at 12 lbs/ft3
- trimmer of planer sorter : 300 lbs/hour estimated at 12 lbs/ft3
- trimmer of sawmill sorter : 300 lbs/hour estimated at 12 lbs/ft3
- hammer hog : 5000 lbs/hour at 12 lbs/ft3
- chipper discharge : 75 lbs/hour at 12 lbs/ft3
- **total maximum capacity : 57430 lbs/hour**
- **total maximum volume capacity : 23474 ft3/hour**

- Planer	top head	Ø 550 mm	15400 cfm
	bottom head	Ø 475 mm	12500 cfm
	right side head	Ø 325 mm	5400 cfm
	left side head	Ø 325 mm	5400 cfm
- infeed table (pineapple rolls)		3 x Ø 160 mm	3000 cfm
- trimmer of planer sorter	sides hoods	2 x Ø 300 mm	9000 cfm
	top hoods	2 x Ø 200 mm	3000 cfm

ITEM	DESCRIPTION			
	- trimmer of sawmill sorter	sides hoods	2 x Ø 300 mm	9000 cfm
		top hoods	2 x Ø 200 mm	3000 cfm
	- hammer hog		Ø 350 mm	6000 cfm
	- chipper discharge	top hood	Ø 375 mm	5300 cfm
			Total air volume :	**77000 cfm**

Reference drawings : RM-16769-01, 16769-01A

NO.1 **ONE SHAVING AND DUST COLLECTOR, model : CYCLOFILTER CF-12.5**

Technical specifications :
- air volume : 77000 cfm
- filtering area : 10790 sq.ft.
- air-to-cloth ratio : 7.1 to 1
- compressed air requirement : 45 cfm at 90 psig

Walk in service plenum :
- fabricated of mild steel 11 ga.
- access door with platform
- heat detector, model Chubb CF200-EWT
- internal deluge system with (4) sprinkler heads piped to outside the unit Ø 1 1/2" NPT
- clean air outlet with fire damper (fusible link)
- **Broken bag detector**
    - model : Dust Alarm Monitor 18-8311-3

Pulsed-air cleaning system :
- compressed air headers c/w :
    - inlet pipe Ø 2" NPT with ball valve
    - pressure gauge
    - drain Ø 3/4" with ball valve
    - outlet pipes Ø 1 1/2" and 2″ NPT
- (10) Goyen double-diaphragm valves Ø 1½"
- (16) Goyen double-diaphragm valves Ø 2"
- (4) Enclosure Goyen solenoid valves RCA3-8V-7000 AC
- (10) shut-off valves Ø 1½"
- (16) shut-off valves Ø 2"
- (10) blow pipes Ø1½" assembly with quick-couplings
- (16) blow pipes Ø 2" assembly with quick-couplings
- Dwyer Controller Nema 4
    - timer controller
    - pressure module

ITEM	DESCRIPTION

Filtering section :
- fabricated of mild steel 11 ga.
- (550) polyester filters bags Ø 160 x 3700 mm
    - polyester felt 14.7-17.3 oz/yd2
    - air permeability 20-40 cfm
    - finish : heatset, glazed one side
    - snap band fixations
    - efficiency 99.9 % based on 1 micron and larger particles
- (550) galvanized steel cages with integrated venturi
- explosion vent doors with Brixon latches model 2H, NFPA-68 norms

Cyclonic separator section :
- fabricated of mild steel 3/16″ thick
- twin-body cylindrical shell with vortex breaker
- tangential air dust inlet
- explosion back draft damper Ø 1400 mm
    - damper 1/4″ abrasion resistant steel AR-400
    - NSK flanges bearing
    - gravity counterweight

Conical hopper section :
- fabricated of mild steel 3/16″ thick
- vortex breaker c/w :
    - access door
    - plug-up detector model Monitor KA, 120 V

Rotary airlock, model : VR-4.85
- opening size : 1200 mm x 1500 mm
- height : 1800 mm
- (8) Blades steel rotor with removable rubbers seal 3/8″ thick
- removable side for the replacement of the rubbers seal
- removable end plate for the replacement of rotor
- Eurodrive gearmotor 25 HP, 480/3/50, TEFC
- chain and sprockets drive assembly with guard
- zero speed switch Telemecanique XSAV11801
- RPM :18

Structural steel support frame
- 4000 mm of clearance under discharge rotary airlock

ITEM	DESCRIPTION
	Maintenance platforms : - to the door access at the service plenum - to the explosion vent doors at the filtering section - to the rotary airlock - galvanised steel grating - handrails **Access ladders to platforms**
NO.2	**ONE INDUSTRIAL FAN, model RCSB-5185** - plug drain - shaft sealer - inspection door - split-housing for access wheel - pulleys and belts 8V, with guard - flanged inlet and outlet - motor and fan common base - sliding motor base - jack shaft drive assembly - Weg electrical motor 400 HP, 1800 rpm, 480/3/50, TEFC, NEMA Premium - Technical specifications : - air volume : 77000 cfm - static pressure : 21" w.g. - rpm : 1000 - bhp : 350
NO.3	**DUCTING FROM THE CYCLOFILTER TO THE FAN** - diameter : 1450 mm - fabricated of 11 ga. mild steel - assembly : bolted flanges <u>The supply includes</u> - straight ducts, elbow, transition - inlet box with inspection door - duct supports - bolts, nuts and caulking

ITEM	DESCRIPTION

NO.4 **STACK FOR THE EXHAUST FAN TO ATMOSPHERE**

- diameter : 1450 mm
- length : 18202 mm
- fabricated of 3/16″ and 11 ga. thick
- assembly : bolted flanges

The supply includes

- transition, straight ducts
- silencer
- flexible joint
- supports
- bolts, nuts and caulking

NO.5 **SHAVING AND SAWDUST COLLECTION DUCTING**

- main duct diameter : 1400 mm
- fabricated of mild steel 11 ga. and elbows 3/16" thick except :
  - infeed table, chipper discharge, and trimmers ducting fabricated of mild steel 14 ga. and elbows 11 ga.
- assembly: bolted flanges

The supply includes:

- straight ducts, branches, elbows, transitions, reducers, sliding gates
- planer : top head with telescopic duct and side heads with ball joints and telescopic ducts
- (8) inspection doors
- duct supports
- bolts, nuts and caulking

ITEM	DESCRIPTION
NO.6	**FLAMEX SPARK DETECTION AND EXTINGUISHING SYSTEM** zone # 1: detect and extinguish into a Ø 1400 mm duct before the Cyclofilter zone # 2: detect into a Ø 1400 mm duct before the Cyclofilter and stop the equipment (rotary airlock, planer ….) and active visual alarm **One (1) control panel model: FMZ-5000-MOD-S** - main circuit board with central processing unit 24 VDC 3 amp power supply - relay card - two (2) 12 VDC 12 AH batteries for standby - front plate with key pad, main liquid crystal display, and audible alarm and fire/fault indication per zone. - unit mounted within IP65 (NEMA 12) enclosure with clear, hinged door - Mod S test module for automatic through-the-lens testing. - provide verification of detector response - (12) spark detectors FUX3001-E complete with mounting hardware - (2) test lights FTX3000-E complete with mounting hardware - (3) extinguishing set assembly Ø 1", F180K52 directional sidewall nozzles - cut-off valve, strainers, unions, solenoid valves 24 VDC (dust system) - one (1) remote alarm 24 VDC - two (2) sets of installation package

RODRIGUE METAL LTÉE - Div. Rodair

ESTIMATE

DUST EMISSIONS

Air volume (cfm)	77000
Air volume (m3 / hre)	130900
Capacity (lbs / hre)	57430
Capacity (kg / hre)	26105

				% des particles	collector efficiency
size particles	smaller than	1	microns	0.01	99
size particles	between	1-50	microns	0.09	99.9
size particles	between	50-100	microns	0.9	99.95
size particles	between	100	microns	3	99.99
size particles	between	100-500	microns	6	99.995
size particles	between	500-1000		10	100
size particles	between	1000-5000		15	100
size particles	bigger than	5000		65	100

PM Control Efficiency

Calculs

Capacity	% of particles	efficiency	KG of material
26105	0.01	99.000	0.026
26105	0.09	99.900	0.023
26105	0.9	99.950	0.117
26105	3	99.990	0.078
26105	6	99.995	0.078
26105	10	100.000	0.000
26105	15	100.000	0.000
26105	65	100.000	0.000

Total reject 0.3237 kg / hre

Emission before control

Capacity	Conversion (gr / kg)	(m3 / hre)			
26105	1000	130900	Emission before control	199427	mg / m3/hre
				26105	kg / hre

Emission after control

Total reject	Factor	(m3 / hre)			
0.3237	1000000	130900	Emission after control	2.473	mg / m3/hre
				0.3237	kg / hre
				0.0011	grain/cu.ft.

Summary of results

Air volume	77000	cfm
	130900	m3 /hre
Capacity	57430	lbs / hre
	26105	kg / hre

Emission Norm mg / m3/hre

Emission before control	26105	kg / hre
Emission before control	199427	mg / m3/hre
Emission after control	0.32	kg / hre
Emission after control	2.47	mg / m3/hre

Project	FS-11562	Design by :	GILLES BEAUDRY
Customer	COMACT BID GROUP	Date :	8-Mar-16
Identification	CYCLOFILTER CF-12.5		

Appendix C

Ambient Air Monitoring Station Data in Sumter County

UNITED STATES ENVIRONMENTAL PROTECTION AGENCY

User ID: MDA

QUICKLOOK CRITERIA PARAMETERS

Report Request ID: 1479649 Report Code: AMP450 Sep. 13, 2016

GEOGRAPHIC SELECTIONS

Tribal Code	State	County	Site	Parameter	POC	City	AQCR	UAR	CBSA	CSA	EPA Region
	01	119									

PROTOCOL SELECTIONS

Parameter Classification	Parameter	Method	Duration
QUICK LOOK	44201		

SELECTED OPTIONS

Option Type	Option Value
MERGE PDF FILES	YES
EVENTS PROCESSING	EXCLUDE REGIONALLY CONCURRED EVENTS
AGENCY ROLE	PQAO
WORKFILE DELIMITER	,

SORT ORDER

Order	Column
1	PARAMETER_CODE
2	STATE_CODE
3	COUNTY_CODE
4	SITE_ID
5	POC
6	DATES
7	EDT_ID

DATE CRITERIA

Start Date	End Date
2012	2015

APPLICABLE STANDARDS

Standard Description
Ozone 1-hour Daily 2005
Ozone 8-hour 2015

Sep. 13, 2016

EXCEPTIONAL DATA TYPES

EDT	DESCRIPTION
0	NO EVENTS
1	EVENTS EXCLUDED
2	EVENTS INCLUDED
5	EVENTS WITH CONCURRENCE EXCLUDED

Note: The * indicates that the mean does not satisfy summary criteria.

Sep. 13, 2016

Ozone (44201) Alabama Parts per million (007)

1-HOUR

SITE ID	POC	PQAO	CITY	COUNTY	ADDRESS	YEAR	METH	VALID DAYS MEAS	NUM DAYS REQ	1ST MAX 1-HR	2ND MAX 1-HR	3RD MAX 1-HR	4TH MAX 1-HR	DAY MAX> STD	EST DAYS> STD	MISS DAYS< STD	CERT and EVAL	EDT
01-119-0003	1	0013	Not in a city	Sumter	NNE of Ward Post Office, Sumter Co., Alabama	2013	047	223	245	.075	.074	.067	.064	0	0.0	3	Y	0
01-119-0003	1	0013	Not in a city	Sumter	NNE of Ward Post Office, Sumter Co., Alabama	2014	047	241	245	.073	.068	.066	.064	0	0.0	4	Y	0
01-119-0003	1	0013	Not in a city	Sumter	NNE of Ward Post Office, Sumter Co., Alabama	2015	047	231	245	.066	.065	.063	.062	0	0.0	6	Y	0

Note: The * indicates that the mean does not satisfy summary criteria.

UNITED STATES ENVIRONMENTAL PROTECTION AGENCY
AIR QUALITY SYSTEM
QUICK LOOK REPORT (AMP450)

Sep. 13, 2016

Ozone (44201) Alabama Parts per million (007)

8-HOUR

SITE ID	POC	PQAO	CITY	COUNTY	ADDRESS	YEAR	METH	%OBS	VALID DAYS MEAS	NUM DAYS REQ	1ST MAX 8-HR	2ND MAX 8-HR	3RD MAX 8-HR	4TH MAX 8-HR	DAY MAX> STD	CERT and EVAL	EDT
01-119-0003	1	0013	Not in a city	Sumter	NNE of Ward Post Office, Sumter Co., Alabama	2013	047	89	218	245	.067	.062	.060	.058	0	Y	0
01-119-0003	1	0013	Not in a city	Sumter	NNE of Ward Post Office, Sumter Co., Alabama	2014	047	97	237	245	.062	.059	.058	.058	0	Y	0
01-119-0003	1	0013	Not in a city	Sumter	NNE of Ward Post Office, Sumter Co., Alabama	2015	047	89	218	245	.062	.060	.059	.057	0	Y	0

Note: The * indicates that the mean does not satisfy summary criteria.

UNITED STATES ENVIRONMENTAL PROTECTION AGENCY
AIR QUALITY SYSTEM
QUICK LOOK REPORT (AMP450)
Lead (TSP) LC

Sep. 13, 2016

Note: These reported values do not reflect the combination of 14129 and 85129 and validation substitution tests utilized for Design Value Calculations

UNITED STATES ENVIRONMENTAL PROTECTION AGENCY
AIR QUALITY SYSTEM
QUICK LOOK REPORT (AMP450 END)

Sep. 13, 2016

METHODS USED IN THIS REPORT

PARAMETER	METHOD CODE	COLLECTION METHOD	ANALYSIS METHOD
44201	047	INSTRUMENTAL	ULTRA VIOLET

Note: The * indicates that the mean does not satisfy summary criteria.

UNITED STATES ENVIRONMENTAL PROTECTION AGENCY
AIR QUALITY SYSTEM
QUICK LOOK REPORT (AMP450 END)

Sep. 13, 2016

PQAOS USED IN THIS REPORT

PQAO	AGENCY DESCRIPTION
0013	Al Dept Of Env Mgt

Note: The * indicates that the mean does
not satisfy summary criteria.

UNITED STATES ENVIRONMENTAL PROTECTION AGENCY
AIR QUALITY SYSTEM
QUICK LOOK REPORT (AMP450 END)

Sep. 13, 2016

CERTIFICATION EVALUATION AND CONCURRENCE FLAG MEANINGS

FLAG	MEANING
M	The monitoring organization has revised data from this monitor since the most recent certification letter received from the state.
N	The certifying agency has submitted the certification letter and required summary reports, but the certifying agency and/or EPA has determined that issues regarding the quality of the ambient concentration data cannot be resolved due to data completeness, the lack of performed quality assurance checks or the results of uncertainty statistics shown in the AMP255 report or the certification and quality assurance report.
S	The certifying agency has submitted the certification letter and required summary reports. A value of "S" conveys no Regional assessment regarding data quality per se. This flag will remain until the Region provides an "N" or "Y" concurrence flag.
U	Uncertified. The certifying agency did not submit a required certification letter and summary reports for this monitor even though the due date has passed, or the state's certification letter specifically did not apply the certification to this monitor.
X	Certification is not required by 40 CFR 58.15 and no conditions apply to be the basis for assigning another flag value
Y	The certifying agency has submitted a certification letter, and EPA has no unresolved reservations about data quality (after reviewing the letter, the attached summary reports, the amount of quality assurance data submitted to AQS, the quality statistics, and the highest reported concentrations).

Note: The * indicates that the mean does not satisfy summary criteria.

Appendix D

RBCL Results for BACT Analysis

Kilns

RBLCID	FACILITY_NAME	PROCESS_NAME	PRIMARY_FUEL	EMISSION_LIMIT_1	EMISSION_LIMIT_1_UNIT	EMISSION_LIMIT_2	EMISSION_LIMIT_2_UNIT	CONTROL_METHOD_DESCRIPTION	Batch or Continous
*AL-0305	RESOLUTE FOREST PRODUCTS - ALABAMA SAWMILL	Continuous Direct-Fired Lumber Dry Kilns with 35 mmbtu/hr Wood Fired Burner	Wood	3.76	LB/MBF	0			Continuous
*AR-0127	DELTIC TIMBER CORPORATION - OLA	DIRECT-FIRED CONTINUOUS KILN NO. 5		38.2	LB/H	0		PROPER DRYING SCHEDULE AND A TEMPERATURE BASED ON MOISTURE CONTENT OF THE LUMBER TO BE DRIED AND THE MANUFACTURER'S SPECIFICATIONS	Continuous
*AR-0134	OLA MILL	SN-04 DIRECT FIRED WOOD KILN	WOOD WASTE	3.8	LB /MBFVOC	0			Continuous
*AR-0134	OLA MILL	SN-05 DIRECT FIRED WOOD KILN	WOOD WASTE	3.8	LB/MBF VOC	0			Continuous
*LA-0281	SOUTHWEST LOUISIANA LUMBER OPERATIONS	EP-3K -Wood-Fired Dry Kiln No. 1	Wood	29.27	LB/H	2.96	LB/M BF	Proper kiln design & operation; annual production limit	Batch
*LA-0281	SOUTHWEST LOUISIANA LUMBER OPERATIONS	EP-4K â€" Wood-Fired Dry Kiln No. 2	Wood	29.27	LB/H	2.96	LB/M BF	Proper kiln design & operation; annual production limit	Batch
*LA-0281	SOUTHWEST LOUISIANA LUMBER OPERATIONS	EP-5K â€" Wood-Fired Dry Kiln No. 3	Wood	29.27	LB/H	2.96	LB/M BF	Proper kiln design & operation; annual production limit	Batch
*LA-0281	SOUTHWEST LOUISIANA LUMBER OPERATIONS	EP-6K â€" Wood-Fired Dry Kiln No. 4	Wood	29.27	LB/H	2.96	LB/M BF	Proper kiln design & operation; annual production limit	Batch
*LA-0293	CHOPIN MILL	Lumber Dry Kilns Nos. 1 & 2 (EQT 37 & 38)		24.51	LB/HR	53.68	TPY	Good operating practices to limit VOC emissions to 4.29 lb/M bd-ft (12-month rolling average).	Unknown
*SC-0162	NEW SOUTH LUMBER COMPANY, INC. DARLINGTON PLANT	DKN5	WOOD WASTE	141	T/YR	0		PROPER MAINTENANCE AND OPERATION	Continuous
*SC-0166	NEW SOUTH LUMBER COMPANY - DARLINGTON INC.	TWO KILNS - KLN5 AND KLN6	GREEN SAWDUST	0		0		PROPER OPERATION AND MAINTENANCE	Continuous
*SC-0169	CAMDEN PLANT	DKN6 - DIRECT FIRED CONTINUOUS LUMBER DRYING KILN	WOOD	150.4	T/YR	0			Continuous
*SC-0172	NEW SOUTH COMPANIES, INC. - CONWAY PLANT	LUMBER KILNS		602	T/YR	4.2	LB/MBF	PROPER MAINTENANCE AND OPERATION	Continuous
AL-0257	WEST FRASER-OPELIKA LUMBER MILL	Two(2) 87.5 MMBF/YR Continuous kilns with a 35 MMBtu/hr direct-fired wood burner	Wood Shavings	3.76	LB/MBF	175	K/12 MONTHS		Continuous
AL-0258	WEST FRASER, INC. - MAPLESVILE MILL	Two(2) 100 MMBF/Y Continuous direct fired kiln	Wood Residuals	3.76	LB/MBF	0			Continuous
AL-0273	MILLPORT WOOD PRODUCTS FACILITY	Continuous direct-lumber dry kiln	Green sawdust	4.7	LB	0		Proper maintenance & operating practice requirements. Test method information: Method 18/25.	Continuous
AR-0101	BIBLER BROTHERS LUMBER COMPANY	SN-07G AND SN-13G CONTINOUS OPERATING KILNS	WOOD RESIDUE	3.8	LB/MBF VOC	46.5	LB VOC/H/KILN		Continuous
AR-0120	OLA	Dry Kiln No. 3 (SN-06)	None	33.3	LB/H	0			Continuous
AR-0120	OLA	Drying Kiln No. 4 (SN-12)	None	33.2	LB/H	0			Continuous
FL-0340	PERRY MILL	Direct-fired lumber drying kiln	Waste wood	3.5	LB/THOUSAND BOARD FT	0		At a minimum, the permittee shall operate the kiln in accordance with the following best operating practices (BMP). a.Minimize over-drying the lumber; b.Maintain consistent moisture content for the processing lumber charge; and c.Dry at the minimum temperature. The permittee shall develop and operate in accordance with a written plan to implement the above BMP and any others required by the kiln manufacturer. Ninety days before the initial startup of the kiln, the permitted shall submit to the Compliance Authority the BMP plan. The Title V air operation permit shall include the submitted BMP plan.	Unknown

Kilns

RBLCID	FACILITY_NAME	PROCESS_NAME	PRIMARY_FUEL	EMISSION_LIMIT_1	EMISSION_LIMIT_1_UNIT	EMISSION_LIMIT_2	EMISSION_LIMIT_2_UNIT	CONTROL_METHOD_DESCRIPTION	Batch or Continous
FL-0343	WHITEHOUSE LUMBER MILL	Direct-Fired Continuous Kilns	Wood waste	3.76	LB/THOUSAND BOARD FT	0		Proper Maintenance and Operating Procedures: Minimize over-drying the lumber. Maintain consistent moisture content for the processing lumber charge. Dry the lumber at the minimum temperature. Develop a written Operation and Maintenance (O&M) plan identifying the above practices and the operation and maintenance requirements from the kiln manufacturer. Record and monitor the total monthly amount and 12-month annual total of wood dried in each kiln (board-feet). Record the calculated monthly and 12-month annual total emissions of VOC to demonstrate compliance with the process and emissions limits.	Continuous
GA-0146	SIMPSON LUMBER CO, LLC MELDRIM OPERATIONS	KILN 3	WASTE WOOD	3.83	LB/MBF	0		PROPER MAINTENANCE AND OPERATION	Continuous
LA-0252	JOYCE MILL	Lumber kilns		930	T/YR	0		properly design and operation	Unknown
OR-0049	GILCHRIST FACILITY	LUMBER DRY KILNS		1.69	LB/MBF	0		PROPER WORK PRACTICES	Unknown
SC-0136	SIMPSON LUMBER COMPANY, LLC	DIRECT-FIRED LUMBER DRYING KILN NO. 4	DRY WOOD WASTE	104	T/YR	3.8	LB/MBF	WORK PRACTICE STANDARDS	Unknown
SC-0137	ELLIOTT SAWMILLING COMPANY	DIRECT-FIRED LUMBER-DRYING KILN NO. 4	SAWDUST	122	T/YR	4.5	LB/MBF	WORK PRACTICE STANDARDS	Unknown
SC-0138	ELLIOTT SAWMILLING COMPANY	DIRECT FIRED LUMBER DRYING KILN NO.5	SAWDUST	119	T/YR	4.5	LB/MBF	WORK PRACTICE STANDARDS	Unknown
SC-0149	KLAUSNER HOLDING USA, INC	LUMBER DRYING KILNS EU007		3.5	LB/MBF	0			Unknown
SC-0151	WEST FRASER - NEWBERRY LUMBER MILL	TWO - 35 MMBTU/H DUAL PATH, DIRECT FIRED, CONTINUOUS LUMBER KILNS, 15 THOUSAND BF/H, EACH	SAWDUST	3.76	LB/MBF	376	T/YR	PROPER OPERATION AND GOOD OPERATING PRACTICES	Continuous
SC-0163	KAPSTONE CHARLESTON KRAFT LLC-SUMMERVILLE	LUMBER KILNS		225.6	T/YR	3.76	LB/MBF	PROPER MAINTENANCE AND OPERATION	Unknown
SC-0164	SIMPSON LUMBER COMPANY, LLC	LUMBER KILNS		156	T/YR	3.76	LB/MBF	PROPER OPERATION AND MAINTENANCE	Continuous
SC-0165	NEW SOUTH COMPANIES, INC. - CONWAY PLANT	LUMBER KILNS		602	T/YR	4.2	LB/MBF	PROPER MAINTENANCE AND OPERATION	Continuous
TX-0584	TEMPLE INLAND PINELAND MANUFACTURING COMPLEX	Dry studmill kilns 1 and 2	wood	2.49	LB VOC/1000 BOARDFEE	0		good operating practice and maintenance	Unknown
TX-0607	LUMBER MILL	Continuous lumber kilns (2)	wood	3.5	LB/MBF	0		proper temperature and process management; drying to appropriate moisture content	Continuous

Evaporators

RBLCID	FACILITY_NAME	PROCESS_NAME	PROCCESS_TYPE	PROCESS_NOTES	CONTROL_METHOD_DESCRIPTION	EMISSION_LIMIT_1	EMISSION_LIMIT_1_UNIT	EMISSION_LIMIT_2	EMISSION_LIMIT_2_UNIT	CONTROL_METHOD_CODE
AL-0267	GEORGIA PACIFIC BRETON LLC	No. 4 Multiple Effect Evaporator System	30.219		INCINERATE in No. 4 REC or No.3 Lime Kiln	0		0		P
AL-0267	GEORGIA PACIFIC BRETON LLC	50% BLS Tank - No.4 Multiple Effect Evaporator System	30.219	50% BLS Tank		0.113	LB/H	0.49	TPY	N
AL-0267	GEORGIA PACIFIC BRETON LLC	73% BLS Tank - No.4 Multiple Effect Evaporator System	30.219	73% BLS Tank		0.113	LB/H	0.49	TPY	N
AL-0267	GEORGIA PACIFIC BRETON LLC	Weak BLS Tank - No.4 Multiples Effect Evaporator System	30.219	Weak BLS Tank		4.84	LB/H	21.2	T/YR	N
AL-0267	GEORGIA PACIFIC BRETON LLC	Stripped Condensate - No.4 Multple Effect Evaporator System	30.219	Stripped Condensate		0.187	LB/H	0.82	TPY	N
AL-0267	GEORGIA PACIFIC BRETON LLC	Condensate A Tank - No.4 Multiple Effect Evaporator System	30.219	Condensate A Tank		0.187	LB/H	0.82	TPY	N
AL-0267	GEORGIA PACIFIC BRETON LLC	Condensate B Tank - No.4 Multiple Effect Evaporator System	30.219	Condensate B Tank		0.485	LB/H	4.31	TPY	N
IN-0144	ELI LILLY AND COMPANY - CLINTON LABS	EV101 EVAPORATOR	69.011	RECOVERING AMYL ALCOHOL	DIRECTED TO EXISTING NARASIN RECOVERY CARBON ADSORPTION SYSTEM	98	% CONTROL EFFIC*	0		A
NE-0037	CARGILL, INC.	STILLAGE EVAPORATOR	64.003		WET SCRUBBER	0.3	LB/H	0		A

Process ID: 13.31 Natural Gas Combustion less than 100 MMBtu/hr

RBLCID	FACILITY_NAME	PROCESS_NAME	PROCCESS_TYPE	PRIMARY_FUEL	THROUGHPUT	THROUGHPUT_UNIT	PROCESS_NOTES	CONTROL_METHOD_DESCRIPTION	EMISSION_LIMIT_1	EMISSION_LIMIT_1_UNIT	EMISSION_LIMIT_2	EMISSION_LIMIT_2_UNIT
*MD-0042	WILDCAT POINT GENERATION FACILITY	AUXILLARY BOILER	13.31	NATURAL GAS	45	MMBTU/H	NATURAL GAS FUEL ONLY, OPERATION OF ULTRA LOW-NOX BURNER TECHNOLOGY, GOOD COMBUSTION PRACTICES, MAX HEAT INPUT OF 90,000 MMBUT/HR PER 12-MONTH ROLLING PERIOD	THE EXCLUSIVE USE OF PIPELINE QUALITY NATURAL GAS, LIMITED HOURS OF OPERATION, AND GOOD COMBUSTION PRACTICES	0.0033	LB/MMBTU	0	
*MI-0393	RAY COMPRESSOR STATION	Auxiliary Boiler	13.31	natural gas	12.25	MMBTU/H	Boiler provides building heat.		0.05	LB/H	0	
*MI-0393	RAY COMPRESSOR STATION	Reboiler (dehydrator with reboiler)	13.31	natural gas	4.8	MMBTU/H	4.8 MMBTU/H reboiler	Thermal oxidizer	0.0054	LB/MMBTU	0	
MI-0406	RENAISSANCE POWER LLC	FG-AUXBOILER1-2; Two (2) natural gas-fired auxiliary boilers.	13.31	natural gas	40	MMBTU/H	Two (2) natural gas-fired auxiliary boilers. 40 MMBTU/H each. Fuel restriction = 360.8 MMSCF/YR total for both units.	Good combustion practices.	0.005	LB/MMBTU	0	
MI-0410	THETFORD GENERATING STATION	FGAUXBOILERS: Two auxiliary boilers < 100 MMBTU/H heat input each	13.31	natural gas	100	MMBTU/H heat input each	There are two auxiliary boilers each rated at less than 100 MMBTU/H heat input. Fuel usage limited to not more than 416.3 MMscf of natural gas in each boiler per 12-month rolling timeperiod as determined	Efficient combustion; natural gas fuel.	0.008	LB/MMBTU	0	
PA-0296	BERKS HOLLOW ENERGY ASSOC LLC/ONTELAUNEE	Auxiliary Boiler	13.31	Natural Gas	40	MMBTU/H			0.14	T/YR	0	
TX-0501	TEXSTAR GAS PROCESS FACILITY	POWER STEAM BOILER	13.31	NATURAL GAS	93	MMBTU/H			0.46	LB/H	0.38	T/YR
NV-0050	MGM MIRAGE	WATER HEATERS - UNITS NY037 AND NY038 AT NEW YORK - NEW YORK	13.31	NATURAL GAS	2	MMBTU/H	FUTURA III WATER HEATERS.THE EMISSION LIMITS REPORTED HEREIN ARE BASED ON THE ATC PERMIT FOR MODIFICATION #9 DATED SEPTEMBER 6, 2006. EACH UNIT IS ALLOWED TO OPERATE 24 HOURS/DAY AND 8,760 HOURS/YEAR.	P	LIMITING THE FUEL TO NATURAL GAS ONLY AND GOOD COMBUSTION PRACTICES	0.0054		0.0108

Process ID: 19.6 Misc. Boiler and Furnaces

RBLCID	FACILITY_NAME	PROCESS_NAME	PROCCESS_TYPE	PRIMARY_FUEL	THROUGHPUT	THROUGHPUT_UNIT	PROCESS_NOTES	CONTROL_METHOD_DESCRIPTION	EMISSION_LIMIT_1	EMISSION_LIMIT_1_UNIT	EMISSION_LIMIT_2	EMISSION_LIMIT_2_UNIT
AL-0221	LOUISIANA PACIFIC CORPORATION	BURNER, START UP/SHUT DOWN, NG	19.6	NATURAL GAS	30	MMBtu/h		GOOD DESIGN/OPERATION	0.2	LB/H	0.0054	LB/MMBTU
CA-1211	COLUSA GENERATING STATION	WATER BATH HEATER	19.6	NATURAL GAS	10	MMBTU/H			7	PPMVD	0.027	LB/H
FL-0303	FPL WEST COUNTY ENERGY CENTER UNIT 3	TWO NOMINAL 10 MMBTU/H NATURAL GAS-FIRED PROCESS HEATERS	19.6	NATURAL GAS	10	MMBTU/H			2	GS/100 SC	0	
*IN-0239	SUBARU OF INDIANA AUTOMOTIVE, INC.	BOILER	19.6	NATURAL GAS	38	MMBTU/H	MISCELLANEOUS PROCESS HEATERS AND BOILERS FROM <1.0 MMBTU/HOUR TO <40 MMBTU/HOUR		0.005	LB/MMBTU	0	
*MD-0042	WILDCAT POINT GENERATION FACILITY	DEW POINT HEATER	19.6	NATURAL GAS	5	MMBTU/H		USE OF EFFICIENT DESIGN OF THE HEATER, EXCLUSIVE USE OF PIPELINE QUALITY NATURAL GAS ONLY, AND APPLICATION OF GOOD COMBUSTION PRACTICES	0.005	LB/MMBTU	0	
*MI-0393	RAY COMPRESSOR STATION	Pipeline heaters	19.6	natural gas	18	MMBTU/H	Pipeline heaters		0.9	LB/H	0	
MI-0406	RENAISSANCE POWER LLC	EU-HEATERSC: Natural gas-fired fuel heater used for heating natural gas prior to combustion in the CTGs. Misc. boilers, furnaces, and heaters	19.6	Natural gas	20	MMBTU/H	Fuel restriction = 171.8 MMSCF/YR	Good combustion practices	0.05	LB/MMBTU	0	
MI-0410	THETFORD GENERATING STATION	FG-FUELHTRS: 2 natural gas fuel heaters, 12 MMBTU/H each	19.6	Natural gas	12	MMBTU/H heat input each fuel heater	This flexible group consists of two natural gas fuel heaters each rated at 12 MMBTU/H heat input each.	Efficient combustion; natural gas fuel.	0.008	LB/MMBTU	0	
NJ-0083	COLONIAL PIPELINE CO LINDEN JCT TANK FARM	Transmix Processing Unit with gas-fired process heaters	19.6	Natural Gas	171.8	MMscf/yr	The unit vents VOC emissions to a vapor combustion unit (95% control efficiency), controls VOC emissions during cleaning operations, and meets New Jersey State of the Art Manual requirements for boilers and process heaters with heat input >= 10 MMBTU/hr but <= 50 MMBTU/hr	Vapor Combustion Unit	0.11	LB/H	0.005	LB/MMBTU
*PA-0281	TEXAS EASTERN TRANS LP/HOLBROOK STATION	7 MISCELLANEOUS GAS HEATERS (<0.5 MMBTU/HR EACH)	19.6	Natural Gas	0		Emissions from the turbine fuel gas heater shall not exceed 0.45 tons NOx/yr, 0.29 tons CO per year, 0.03 tons PM10 per year, and 0.02 tons VOC per year. Compliance with this limit shall be demonstrated using fuel consumption (or hours of operation) and AP-42 emission factors.		0.02	TPY	0	
PA-0288	SUNBURY GENERATION LP/SUNBURY SES	DEW POINT HEATER	19.6	Natural Gas	15	MMBTU/H	Source shall only be fired on pipeline quality natural gas. Source shall not be operated in excess of 8,275 hours in any 12 consecutive month period.		0.006	LB/MMBTU	0.34	T/YR
PA-0296	BERKS HOLLOW ENERGY ASSOC LLC/ONTELAUNEE	Fuel Preheater	19.6	Natural Gas	8.5	MMBTU/H			0.05	LB/MMBTU	0	
*SC-0142	SHOWA DENKO CARBON, INC.	HOT OIL HEATER	19.6	NATURAL GAS	5	MMBTU/H	THERE WILL BE A HOT OIL HEATER FOR THE MILL, MIX, AND EXTRUSION PROCESS AND A HOT OIL HEATER FOR THE PITCH IMPREGNATION PROCESS (EACH SIZED AT 5 MMBTU/HR).	GOOD COMBUSTION PRACTICES, ANNUAL TUNE UP, LOW NOX BURNERS	0.012	LB/MMBTU	0	
*SC-0142	SHOWA DENKO CARBON, INC.	CARBOTTOM FURNACES	19.6	NATURAL GAS	18	MMBTU/H	THERE ARE 15 CARBOTTOM FURNACES BEING INSTALLED THAT ARE RATED AT 18 MILLION BTU/HR EACH.	THERMAL OXIDIZER, LOW NOX BURNERS, GOOD COMBUSTION PRACTICES, ANNUAL TUNE-UP, PROCESS OPTIMIZATION	17.3	LB/H	0	
*SC-0142	SHOWA DENKO CARBON, INC.	PITCH IMPREGNATION/PREHEATER	19.6	NATURAL GAS	12	MMBTU/H		GOOD COMBUSTION PRACTICES, ANNUAL TUNE UP, LOW NOX BURNERS	0.011	LB/MMBTU	0	
*SC-0170	BP AMOCO CHEMICAL COMPANY - COOPER RIVER PLANT	#2 OXIDATION UNIT HIGH PRESSURE VENT GAS TREATMENT SYSTEM FIRED HEATER	19.6		0			GOOD COMBUSUTION PRACTICES, NATURAL GAS AS SOLE FUEL, TUNE-UPS	0.0055	LB/MM BT	0	
TX-0501	TEXSTAR GAS PROCESS FACILITY	BOTTOM HEATERS (2)	19.6		15	MMBTU/H	EMISSIONS ARE PER HEATER		0.09	LB/H	0.39	T/YR

Process ID: 49.999 Other Organic Evaporative Loss Sources

RBLCID	FACILITY_NAME	PROCESS_NAME	PROCCESS_TYPE	PRIMARY_FUEL	PROCESS_NOTES	CONTROL_METHOD_DESCRIPTION	EMISSION_LIMIT_1	EMISSION_LIMIT_1_UNIT	EMISSION_LIMIT_2	EMISSION_LIMIT_2_UNIT
AZ-0048	HEXCEL CORPORATION	PURGE/CURE OVENS #19, 20, 21	49.999	N/A ELECTRIC	ONLY EMISSIONS FROM THE OVENS ARE VOCS, NO COMBUSTION.	THERMAL OXIDIZER	95	% REDUCTION	0	
AZ-0048	HEXCEL CORPORATION	PURGE CURE OVENS 26, 27, 28	49.999	NATURAL GAS	EMISSIONS FROM COMBUSTION OF NATURAL GAS NOT INCLUDED HERE. ONLY VOC/HAPS FROM THE CURING OF HONEYCOMB BLOCKS.	2 REGENERATIVE THERMAL OXIDIZERS.	300	T	95	% REDUCTION
FL-0318	HIGHLANDS ETHANOL FACILITY	Facility-wide Fugitive VOC Equipment Leaks	49.999		Fugitive VOC emissions are grouped for the entire process and will be minimized by implementation of a monthly leak detection and repair (LDAR) monitoring program.	The most practical method of controlling fugitive VOC emissions from HEF is to promptly repair any leaking components. HEF is subject to NSPS 40 CFR 60, Subpart VVa - VOC Equipment Leaks in the Synthetic Chemical Manufacturing Industry (SOCMI). NSPS Subpart VVa requires a LDAR program. HEF must come in to compliance with Subpart VVA, including the LDAR program, no later than 180 days after HEF becomes operational.	19.6	T/YR	0	
IA-0088	ADM CORN PROCESSING - CEDAR RAPIDS	VOC EMISSION FROM EQUIPMENT LEAKS	49.999		PERMIT 07-A-592-P.	LEAK DETECTION AND REPAIR (LDAR) MONITORING SYSTEM	47.67	T/YR	0	
*IN-0247	HONEYWELL INTERNATIONAL, INC.	SOIL VAPOR EXTRACTION SYSTEM, TANK AND LOADING	49.999			RESIN ADSORPTION SYSTEM	0.87	LB/H	30	PPMV
*TX-0663	JACKSON COUNTY GAS PLANT	Total Fugitives	49.999			28LAER	0		26.08	TON
*TX-0663	JACKSON COUNTY GAS PLANT	Loading Rack	49.999		300,000 gallons /yr Vapor Pressure is below 0.5 psia at 95Â° F	Submerged fill	0		0.03	TON
*TX-0663	JACKSON COUNTY GAS PLANT	Blow downs and starter vent openings	49.999		130 tpy VOC	Flare	0		2.6	TON
*TX-0676	CORPUS CHRISTI TERMINAL	Crude oil and condensate storage and marine loading.	49.999		Crude oil and condensate will be stored and marine loaded onto barges and ships. Project increases of volatile organic compounds (VOCs), as associated with ozone formation triggered the PSD review for initial permit No. PSDTX1258. VOC emissions are generated from marine loading of barges/ships, storage tanks, vapor combustion unit (VCU), and fugitive components.	Barge and ship emissions from the marine loading of oil/condensate are routed to a VCU.	0		0	

PRELIMINARY DETERMINATION
Two Rivers Lumber Company, LLC
Facility No. 105-S007

Introduction

On September 29, 2016, GBMc & Associates submitted, on behalf of Two Rivers Lumber Co., LLC (TRL), a Prevention of Significant Deterioration (PSD) permit application. In the application, TRL proposes to construct a new sawmill facility at a Greenfield site in Marengo County, near Demopolis, Alabama. An application addendum was received on October 11, 2016. Once the two construction phases are completed, the facility would have the capability of producing 270 MMBF/yr of dimensional softwood lumber. Air Permit Nos. X001 through X004 would be issued for the proposed sawmill pending the resolution of any comments that may be received during the public comment period and EPA review.

Proposed Project

The proposed sawmill would be constructed in two phases, with a final capacity of 270 MMBF of lumber per year. The initial construction (Phase I) will consist of the construction and installation of all the major components of the sawmill, with the exception of one lumber drying kiln and one condensate evaporator. Phase II will consist of the construction of the second kiln and condensate evaporator.

Processes at the facility would consist of log debarking, log bucking, a bark hog, a sawmill, sawmill chipper, two (2) 134.9 MMBF/yr dual path continuous kilns with two (2) 38.8 MMBtu/hr natural gas-fired burners, two (2) condensate evaporators with two (2) 4 MMBtu/hr natural gas-fired burners, and a planer mill. TRL would also install four (4) wood residuals storage bins for byproducts to include: bark, chip, and sawdust storage bins, with mechanical conveyors for transporting the wood residuals, a shavings storage bin with pneumatic conveyance, and a cyclofilter for particulate emission control.

Incoming logs would be stored on-site prior to processing. Logs would debarked and then cut to length within the log bucking process before being routed through the sawmill. Bark from the debarker would be routed to the bark hog and mechanically conveyed to the bark storage bin. Trimmings from the sawmill would be routed to the sawmill chipper and mechanically conveyed to the chip storage bin. Sawdust from the sawmill would be mechanically conveyed to the sawdust storage bin. The end product of this process is rough, green dimensional lumber. The green lumber would be sorted and stacked before being dried in one of two continuous drying kilns. Emissions from the green end processes, sawmill, and the residuals storage bins would be fugitive. Emissions would be minimized by the use of covered belt or drag chain conveyors.

Continuous kilns allow the awaiting green lumber to be conditioned while more lumber is drying. The kilns would be counter-currently fed in which dimensional wood would enter the kiln from both ends. As the green lumber enters the kiln, it would be slowly heated until it reaches the center, where most of the drying would take place. As the drying lumber moves beyond the center area, it would preheat, or "condition," the green lumber entering the kiln from the opposite side. This process minimizes energy use by heat transfer from exiting newly dried

wood to incoming green wood. The proposed kilns would be direct-fired by two separate natural gas burners. All air emissions would exhaust through the open doorways at each end of the kilns. The condensate from each kiln would be routed to its respective natural gas-fired condensate evaporator to eliminate any condensate discharge from the facility.

The dried lumber would be processed through the planer mill. Planer shavings and planer hog trimmings would be pneumatically conveyed to a cyclofilter before transferring by mechanical conveyor to the shavings storage bin. A cyclofilter is a combined cyclone and baghouse control device. The cyclofilter would be used for the transport and particulate emission control of the pneumatically conveyed shavings.

Applicability: Federal Regulations

Title V

Upon the completion of construction, this facility would be considered a major source under Title V regulations because potential emissions for volatile organic compounds (VOC) would exceed the 100 ton per year (TPY) major source threshold.

National Emission Standards for Hazardous Air Pollutants (NESHAP)

NESHAP requires that any facility whose potential emission of hazardous air pollutants (HAPs) exceed 10 TPY of a single hazardous air pollutant (HAP) or 25 of combined HAPs must control these emissions to the level achievable by the best demonstrated technology as specified in the applicable provisions. The NESHAP standards are established for source categories and prescribed based on whether the source is “existing” or “new”. This facility would be considered a “new” source. The facility would be a major source for HAPs and an affected source under the NESHAP Subpart DDDD, *Plywood and Composite Wood Products* (PWCP MACT).

The PCWP MACT regulates HAP emissions from activities associated with the manufacture of plywood and other composite wood products, including stand-alone lumber kilns, in accordance with 40 CFR §63.2232. Processes that are not subject to the compliance options or work practice requirements specified in 40 CFR §63.2240, such as the lumber kilns, are specifically not required to comply with the compliance options, work practice requirements, performance testing, monitoring, startup/shutdown/maintenance (SSM) plans, and recordkeeping or reporting requirements of this subpart, or any other requirements in 40 CFR 63 Subpart A, except the initial notification requirements in 40 CFR §63.9(b) in accordance with 40 CFR §63.2252. The application serves as the initial notification of the intention to construct two dual path lumber kilns, affected sources under PCWP MACT. There are no other proposed sources subject to a NESHAP.

New Source Pollutant Standards (NSPS)

No applicable NSPS has been promulgated for any process at the proposed facility.

Prevention of Significant Deterioration (PSD)

The proposed facility will be located in Marengo County which is currently classified as an attainment area for all criteria pollutants. TRL would not be one of the 28 Major Source categories listed in ADEM Admin. Code r. 335-3-14-.04(2)(a)1; therefore, the applicable PSD criteria pollutant major source threshold would be 250 TPY. According to emission calculations, the potential VOC emissions from the proposed facility would be greater than the 250 TPY PSD major source threshold (640 TPY of VOC).

In comparing all other criteria pollutants to their respective significance levels, only PM exceeds its 25 TPY significance level, due to the PTE based on state allowable process weight. To avoid triggering PSD for PM, TRL requested synthetic minor source limits for each particulate point source.

A major source or major modification (one subject to PSD) must be constructed with Best Available Control Technology (BACT) and must have its effect on soils, vegetation, visibility, and ambient air quality addressed for each applicable pollutant. Applicability is determined by comparing each regulated pollutant's potential emission increase to its significant increase value. TRL calculated the maximum pollutant emissions based on proposed future potential annual emissions (shown in the following table).

Emissions Summary (TPY)

Proposed Potential Emissions (TPY)	**PM**	**PM_{10}**	**$PM_{2.5}$**	**CO**	**NOx**	**VOC**	**SO_2**
Green End Processes (Fugitive)	6.1	3	1.5				
Sawmill (Fugitive)	55.2	31.5	15.8				
Continuous Kiln #1	* 5.52	5.52	4.03	14	8.3	320	0.1
Condensate Evaporator #1	* 0.30	0.30	0.30	1.4	1.7	0.001	0.01
Continuous Kiln #2	* 5.52	5.52	4.03	14	8.3	320	0.1
Condensate Evaporator #2	* 0.30	0.30	0.30	1.4	1.7	0.001	0.01
Planer Mill w/ Cyclofilter	* 0.21	0.21	0.21				
Wood Waste Storage (Fugitive)	0.06	0.03	0.005				
Total w/ Fugitive Emissions	73.21	46.43	26.15	30.8	20	640	0.22
-minus Fugitive Emissions	(61.36)	(34.58)	(17.28)				
Total Proposed Emissions (TPY)	11.85	11.85	8.87	30.8	20	640	0.22
PSD Significant Emission Rate (TPY)	25	15	10	100	40	40	40
PSD Triggered?	No	No	No	No	No	Yes	No

* Requested synthetic minor source limits

Sources subject to PSD must satisfy the following requirements before being allowed to initiate construction:

1. Provide opportunity for public participation in the permitting process relative to the air quality impact the source would have if it were built.

2. Obtain a permit which sets forth emission limitations.

3. Demonstrate that the emissions from the source would not cause or contribute to a violation of the PSD increment or the NAAQS.

4. Apply the best available control technology (BACT), which is defined in terms of an emission limitation, based on the maximum degree of reduction of each pollutant which is determined to be technically and economically achievable for that particular source.

5. Analyze the impairment to visibility, soils, and vegetation that might occur as a result of operation of the source.

6. Analyze the air quality impacts projected due to the growth associated with the facility.

7. Conduct any ambient air quality monitoring necessary to determine the effect of the emissions on air quality.

Public Participation

In order to satisfy the public participation requirement, a copy of the preliminary determination (this engineering analysis) and the permit applications will be sent to public repository (ies) for at least 30 days of public review. Notification will also be made in a local newspaper of general circulation. After the 30-day public comment period and within 5 days of the PSD permit issuance, the final determination will be made available at the public repository (ies) for 14 days of public review. The final determination consists of copies of the signed permits, any comments received during the public comment period, and any responses made to those comments.

BACT Determination

During a PSD review, new and modified sources must be assessed for Best Available Control Technology, or BACT, if their potential emissions increase is significant. BACT is an emission limit based on the maximum pollutant reduction achievable considering energy, economic, and environmental impacts. BACT is determined on a unit by unit, pollutant by pollutant basis. The BACT limit can be no less stringent than any applicable New Source Performance Standard (NSPS), National Emission Standard for Hazardous Air Pollutants (NESHAP), or other applicable standard.

For the proposed project, BACT must be determined for VOC emissions from the continuous lumber drying kilns. TRL also provided information regarding BACT for the condensate evaporators. Although considered in the BACT analysis, due to the potential emissions of VOC, BACT would not be necessary for the condensate evaporators. TRL utilized the “top-down” approach for the BACT analysis. This approach considers the most stringent control option available and a determination of its technical feasibility for the emission unit in question. If the option is not rejected, the applicant must analyze the option based upon economic, environmental, and energy considerations. Below are the five basic steps of a top-down BACT review procedure as identified by the US EPA in the March 15, 1990, Draft BACT Guidelines:

Step 1. Identify all control technologies

Step 2. Eliminate technically infeasible options

Step 3. Rank remaining control technologies by control effectiveness

Step 4. Evaluate most effective controls and document results

Step 5. Select BACT

Step 1. Identify all control technologies:

TRL examined the feasibility of the following control technologies: regenerative thermal oxidation, regenerative catalytic oxidation, carbon adsorption, condensation, biofiltration, web scrubbing, and proper maintenance and operating practices.

Regenerative Thermal Oxidation

Regenerative Thermal Oxidation (RTO) refers to the complete gas phase combustion of VOC to carbon dioxide and water vapor. Oxidation is achieved by heating the VOC exhaust in the presence of oxygen. Auxiliary fuel (typically natural gas) is almost always required to maintain minimum combustion conditions. RTO units use beds of ceramic media to recover and store heat, and typically operate at a final oxidation temperature between 1400ºF and 1500ºF. The exhaust gases from the combustion chamber are used to heat another ceramic bed, periodically reversing the air flow to preheat the VOC-laden gas stream. Depending on the system requirements and the characteristics of the contaminated stream, an RTO is able to achieve VOC removal efficiency ranges from 95 to 99%, with lower control efficiencies associated with lower concentration flows.

Regenerative Catalytic Oxidation

Regenerative catalytic oxidizer (RCO) units function similarly to an RTO, except that the heat recovery beds in an RCO contain catalytic media. The catalyst accelerates the rate of VOC oxidation and allows for VOC destruction at lower temperatures than in an RTO, typically 600°F to 1000°F, which reduces auxiliary fuel usage. Typical VOC destruction efficiency ranges are 90 to 99% for RCO systems. However, this also depends on system requirements and the characteristics of the contaminated stream.

Carbon Adsorption

The core component of a carbon adsorption system is an activated carbon bed contained in a steel vessel. The VOC-laden gases pass through the carbon bed and the VOCs are adsorbed on the activated carbon. The cleaned gas is discharged to the atmosphere. The spent carbon is regenerated either at an onsite regeneration facility or by an off-site activated carbon supplier. Steam is used to replace adsorbed organic compounds at high temperatures to regenerate the spent carbon. At proper operating conditions, carbon adsorption systems have demonstrated VOC reduction efficiencies of approximately 90 to 95%.

Condensation

Condensation removes vaporous contaminants from the gas stream by cooling it and converting the vapor into a liquid. In some instances, control of VOC can be satisfactorily achieved entirely be condensation. However, most applications require additional control methods. In such cases, the use of a condensation process reduces the concentration load on downstream control equipment. The two most common type of condensation devices are contact or barometric condensers and surface condensers.

Biofiltration

Biofiltration is an air pollution control technology in which off-gases containing biodegradable organic compounds are vented, under controlled temperature and humidity, through a special filter material containing microorganisms. As exhaust gases pass through the biofilter, VOC is absorbed on the filter material, and the microorganisms break down the compounds and transform them into CO_2 and H_2O with varying efficiency.

Wet Scrubbing

Scrubbing of gas or vapor pollutants from a gas stream is usually accomplished in a packed column (or other type of column) where pollutants are absorbed by counter-current flow of a scrubbing liquid. A VOC laden gas stream with relatively high water solubility is required in order for the wet scrubber to be effective.

Proper Maintenance and Operating Practices

Proper maintenance and operation of lumber drying kilns can effectively reduce VOC emissions. Proper maintenance and operating practices are comprised of work practice and operational standards and recordkeeping and reporting requirements. Proper drying schedule and temperature should be selected based on moisture content and manufacturer's specifications. Routine maintenance should also be completed on kilns based on the manufacturer's recommendations. This method involves no add-on pollution controls.

Step 2. Eliminate technically infeasible options:

Regenerative Thermal Oxidation

Due to the high moisture content and low exit temperature in the exhaust streams, TRL has determined RTO would be technically infeasible. ADEM concurs with this determination.

Regenerative Catalytic Oxidation

The temperature of the exhaust stream from the lumber drying kilns is not high enough for optimal function of the catalytic oxidizer. Furthermore, additional control equipment would be required to prevent the loss of catalytic activity due to fouling by particulate matter or suppression or poisoning from other contaminants in the waste gas stream. Therefore, this control technology would not be a feasible means of VOC control. ADEM concurs with this determination.

Carbon Adsorption

Carbon adsorption is not practical because of the high moisture content of the exhaust stream from the lumber drying kilns. At high moisture contents, the water vapor and VOC compounds would compete with each other for the absorption media's active sites; therefore, greatly reducing the capture efficiency of the control device. Therefore, this control technology would not be a feasible means of VOC control. ADEM concurs with this determination.

Condensation

Condensation requires that the exhaust leaving the kilns be cooled to a low enough temperature to allow for the VOC to go from a gas phase to liquid phase. The VOC in the kilns' exhaust stream are primarily terpenes; therefore, the temperature at which these compounds would start to become liquid is -40°F. At that temperature, the water vapor in the exhaust stream would freeze, which would clog the unit. Therefore, this control technology would not be a feasible means of VOC control. ADEM concurs with this determination.

Biofiltration

Most microorganisms used in biofiltration typically can survive and flourish in a temperature range of 60-105°F. The temperature of the exhaust streams of the kilns would be approximately 140-200°F. Furthermore, the primary VOC in the exhaust stream is terpenes. Terpenes are highly viscous and would foul the biofilter. TRL has determined that biofiltration is a technically infeasible option. ADEM concurs with this determination.

Wet Scrubbing

The primary VOC emission from the lumber drying kilns would be terpenes. Terpenes are not highly soluble. Furthermore, terpenes are highly viscous and would foul the absorption media of a wet scrubber. TRL has determination that wet scrubbing is a technically infeasible option. ADEM concurs with this determination.

Proper Maintenance and Operating Practices

Proper maintenance and operating practices is a technically feasible option for minimizing VOC emissions and is considered further in the BACT determination.

Step 3 Rank remaining control technologies by control effectiveness:

Rank	Control Technology	Potential Control Efficiency
1	Proper Maintenance and Operating Practices	Base Case

Step 4. Evaluate most effective controls and document results:

Proper Maintenance and Operating Practices

No control technology is currently feasible for lumber drying kilns beyond proper maintenance and operation. A search of EPA RACT/BACT/LAER Clearinghouse shows other emission factors utilized in permitting emission limits of VOC; there is no

information to determine that these factors can be routinely "achieved in practice". The species of wood dried within the kiln has a distinct impact on the resulting VOC emissions. Proper maintenance and operating practices can effectively minimize VOC formation and would be considered BACT for the kilns. ADEM concurs with this determination.

Step 5. Select BACT:

TRL proposes the following emission level as BACT:

Pollutant	BACT Determination	BACT Emission Limit	Equivalent Emissions
VOC	Proper Maintenance and Operating Practices	3.80 lb/MBF VOC as Carbon *	513 TPY (at max. capacity 270 MMBF/yr) *

* This would equate to 4.74 lb/MSF and 640 TPY of VOC as WPP1.

A search of EPA RACT/BACT/LAER Clearinghouse indicated that no facilities are utilizing add-on controls for lumber drying kilns, and the proposed VOC emission limit of 3.80 lb/MBF (VOC as Carbon) is similar to other BACT determinations for continuous kilns in the wood products industry. The Air Division concurs that proper maintenance and operating practices and an emission limit of 3.80 lb/MBF (VOC as Carbon) represents BACT for the proposed kilns.

In addition to the BACT emission limit, the following manufacturer recommended maintenance and operating practices would be incorporated into the permit as enforceable conditions:

<u>Proper Maintenance and Operating Practices</u>

- Within six (6) months of issuance of Temporary Authorization to Operate the continuous direct-fired kilns, the Permittee shall develop and submit to the Air Division a site-specific operating and maintenance plan for the kilns. The plan shall identify key parameters to be monitored which are related to VOC emissions from the kilns and the frequency and/or averaging period of the monitoring. Upon Air Division concurrence with the plan, the Permittee shall begin implementation of the proposed monitoring and recordkeeping.

<u>Modeling</u>

Since the proposed sawmill would be significant for only VOC emissions, no modeling is required. However VOC is recognized as a precursor to ozone, which has an established NAAQS. TRL provided a pre-construction ambient monitoring analysis for ozone emissions using existing monitoring stations operated by ADEM and the Mississippi Department of Environmental Quality (MDEQ). The ozone monitoring site that best represents the ozone concentration in the region surrounding TRL is located in Ward, Sumter County, Alabama, Station 01-119-0003. The increase in ozone formation from the proposed TRL sawmill is expected to be insignificant, representing a less than 1% increase over the 2011 baseline VOC emissions. Based on the Marengo County surrounding area's low concentration of ozone and

attainment status, along with the projected VOC emissions presenting a minor increase in total VOC emissions, there is no expected effect on the attainment status of the region.

Additional Impacts

Additional impact analyses assess the impacts of air, ground, and water pollution on soils, vegetation, and visibility caused by any increase in emissions of any regulated pollutant resulting from the modification under review and from associated growth. The depth of the analysis depends on existing air quality, the quantity of emissions, and the sensitivity of local soils, vegetation, and visibility in the source's impact area. TRL addressed the impacts of the proposed project with respect to growth, soils and vegetation, and visibility.

No sensitive aspects of the soil and vegetation surrounding the facility have been identified. Since the proposed ambient concentrations of the criteria pollutants after completion of this project would be expected to be below the NAAQS and Class II increment, no harmful effects to either soil or vegetation would be expected. Furthermore, the proposed project would not be expected to change the status of visibility in the area of the Demopolis facility, based on existing visual observations of the area and of similar type facilities in other areas. The Air Division concurs with TRL that the air quality analysis shows insignificant impacts with respect to visibility or soils and vegetation.

The proposed sawmill facility should not have any measurable effect on the surrounding population, nor should there be any additional industrial or residential growth attributed to the addition of the facility. Thus, the Air Division concurs that existing levels of air quality would not be expected to be affected by any direct or indirect growth which may be attributed to the proposed sawmill facility.

The TRL sawmill would be located over 200 km from any PSD Class I Area and would not be expected to significantly impact any such area.

Emission Testing and Monitoring

I recommend that no emission testing be required for the proposed kilns at this time since it is expected that the kilns would be able to comply with the proposed BACT limitation, testing for continuous kilns is not easily conducted, and there are no emission control devices. I also recommend that no emission testing be required for the proposed cyclofilter at this time since calculations in the application indicate the capability of complying with the State allowable particulate emission rates and Synthetic Minor emission limits. If emission problems are observed in the future from these emission sources, testing may be required at that time.

To ensure that the maximum capacity of the proposed kilns are not exceeded, TRL would be required to calculate the kiln production on a monthly and 12-month rolling total basis, to be updated within ten (10) days of the end of each calendar month.

To ensure proper operation of the green end processes, sawmill, and cyclofilter, minimum weekly visual observations would be required, with corrective action required to be initiated as soon as practicable but no longer than 24 hours if visible emissions are determined to be greater than normal. Minimum annual physical inspections would be required.

Conclusions and Recommendations

This analysis indicates that this facility would meet the requirements of all applicable federal and State rules and regulations. Therefore, I recommend that TRL be issued Air Permit Nos. 105-S007-X001 through X004 for the proposed sawmill facility pending any comments received during the public comment period.

_____

Rachael Broadway
Chemical Branch
Air Division

November 10, 2016
Date

Appendix A
Emission Calculations

Fac. No. 105-S007 Two Rivers Lumber Company, LLC Marengo County

	Pollutants (TPY)													
	Criteria								Individual HAPs					
Process	PM	PM10	PM2.5	CO	NO x	SO2	VOC as C	VOC as WPP1	Methanol	Phenol	Form.	Ace.	Acrolein	Total HAP
Log Debarking	0.00	0.00	0.00											
Log Bucking	5.52	2.76	1.38											
Bark Hog	0.19	0.09	0.04											
Sawmill Chipper	0.37	0.17	0.08											
Sawmill	55.19	31.54	15.77											
DPK-1	5.52	5.52	4.03	13.98	8.32	0.10	256.32	319.72	13.42	0.67	1.25	3.51	0.51	19.36
DPK-2	5.52	5.52	4.03	13.98	8.32	0.10	256.32	319.72	13.42	0.67	1.25	3.51	0.51	19.36
CE-1	0.30	0.30	0.30	1.44	1.72	0.01	0.00		0.04		0.00			0.04
CE-2	0.30	0.30	0.30	1.44	1.72	0.01	0.10		0.04		0.00			0.04
Planer Mill	0.21	0.21	0.21											
Wood Waste Storage														
Bark Bin	0.01	0.01	0.00											
Sawdust Bin	0.01	0.00	0.00											
Chip Bin	0.04	0.02	0.00											
Shavings Bin	0.00	0.00	0.00											
Facility totals	73.18	46.43	26.15	30.85	20.08	0.22	512.73	639.44	26.92	1.35	2.50	7.02	1.01	38.80
- (fugutives)	11.85	11.85	8.87											

Appendix B
Draft Permits

AIR PERMIT

PERMITTEE: TWO RIVERS LUMBER CO., LLC

FACILITY NAME: TWO RIVERS LUMBER CO., LLC

LOCATION: DEMOPOLIS, MARENGO COUNTY, ALABAMA

PERMIT NUMBER	DESCRIPTION OF EQUIPMENT, ARTICLE OR DEVICE
105-S007-X001	Sawmill and Green End Operations [SMS], which include: • Green End Operations [Log Debarker (LD-1), Log Bucking (LB-1), Bark Hog (BH-1), and mechanical conveyors to the Bark Storage Bin (BSB-1) • Sawmill (SM-1), Sawmill Chipper (SC-1), and mechanical conveyors to the Sawdust and Chip Storage Bins (SDSB-1 & CSB-1) • Truck loadout operations from storage bins (BSB-1, SDSB-1, & CSB-1)

In accordance with and subject to the provisions of the Alabama Air Pollution Control Act of 1971, as amended, Ala. Code §§22-28-1 to 22-28-23 (2006 Rplc. Vol. and 2007 Cum. Supp.) (the "AAPCA") and the Alabama Environmental Management Act, as amended, Ala. Code §§22-22A-1 to 22-22A-15 (2006 Rplc. Vol. and 2007 Cum. Supp.), and rules and regulations adopted there under, and subject further to the conditions set forth in this permit, the Permittee is hereby authorized to construct, install and use the equipment, device or other article described above.

ISSUANCE DATE: DRAFT

Alabama Department of Environmental Management

TWO RIVERS LUMBER CO., LLC
DEMOPOLIS, ALABAMA
(PERMIT NO. 105-S007-X001)
PROVISOS

1. This permit is issued on the basis of Rules and Regulations existing on the date of issuance. In the event additional Rules and Regulations are adopted, it shall be the permit holder's responsibility to comply with such rules.

2. This permit is not transferable. Upon sale or legal transfer, the new owner or operator must apply for a permit within 30 days.

3. A new permit application must be made for new sources, replacements, alterations or design changes which may result in the issuance of, or an increase in the issuance of, air contaminants, or the use of which may eliminate or reduce or control the issuance of air contaminants.

4. The permittee shall keep this permit under file or on display at all times at the site where the facility for which the permit is issued is located and shall make the permit readily available for inspection by any or all persons who may request to see it.

5. In the event there is a breakdown of equipment in such a manner as to cause increased emission of air contaminants for a period greater than **1 hour**, the person responsible for such equipment shall notify the Air Division within an additional 24 hours and provide a statement giving all pertinent facts, including the duration of the breakdown. The Air Division shall be notified when the breakdown has been corrected.

6. The process for which this permit is issued shall be maintained and operated at all times in a manner so as to minimize the emissions of air contaminants. Procedures for ensuring that the above equipment is properly operated and maintained so as to minimize the emission of air contaminants shall be established.

7. This permit expires and the application is cancelled if construction has not begun within 24 months of the date of issuance of the permit.

8. On completion of construction of the device(s) for which this permit is issued, written notification of the fact is to be submitted to the Chief of the Air Division. The notification shall indicate whether the device(s) was constructed as proposed in the application. The device(s) shall not be operated until authorization to operate is granted by the Chief of the Air Division. Failure to notify the Chief of the Air Division of completion of construction and/or operation without authorization could result in revocation of this permit.

9. Submittal of other reports regarding monitoring records, fuel analyses, operating rates, and equipment malfunctions may be required as authorized in the Department's air pollution control rules and regulations. The Department may require stack emission testing at any time.

10. Additions and revisions to the conditions of this Permit will be made, if necessary, to ensure that the Department's air pollution control rules and regulations are not violated.

11. Nothing in this permit or conditions thereto shall negate any authority granted to the Air Division pursuant to the Alabama Environmental Management Act or regulations issued thereunder.

12. This permit is issued with the condition that, should obnoxious odors arising from the plant operations be verified by Air Division inspectors, measures to abate the odorous emissions shall be taken upon a determination by the Alabama Department of Environmental Management that these measures are technically and economically feasible.

13. Precautions shall be taken to prevent fugitive dust emanating from plant roads, grounds, stockpiles, screens, dryers, hoppers, ductwork, etc.

    Plant or haul roads and grounds will be maintained in the following manner so that dust will not become airborne. A minimum of one, or a combination, of the following methods shall be utilized to minimize airborne dust from plant or haul roads and grounds:

    (a) by the application of water any time the surface of the road is sufficiently dry to allow the creation of dust emissions by the act of wind or vehicular traffic;

    (b) by reducing the speed of vehicular traffic to a point below that at which dust emissions are created;

    (c) by paving;

    (d) by the application of binders to the road surface at any time the road surface is found to allow the creation of dust emissions;

    Should one, or a combination, of the above methods fail to adequately reduce airborne dust from plant or haul roads and grounds, alternative methods shall be employed, either exclusively or in combination with one or all of the above control techniques, so that dust will not become airborne. Alternative methods shall be approved by the Department prior to utilization.

14. Should Air Division personnel make a determination that excessive emissions are occurring from this process such that offsite impacts are noted, the permittee shall investigate and implement additional emission controls or operational measures to correct the problem. If the permittee would need to install additional emission control equipment and/or institute additional permanent operational measures to address the problem, the permittee shall notify the Air Division in writing within 10 working days of determining that additional controls are needed.

15. This process shall be operated at all times using the best available operating and management practices so that provisions of the Department's rules and regulations shall not be violated.

16. Precautions shall be taken by the permittee and its personnel to ensure that no person shall ignite, cause to be ignited, permit to be ignited, or maintain any open fire in such a manner

as to cause the Department's rules and regulations applicable to open burning to be violated.

17. The issuance of this permit does not convey any property rights of any sort, or any exclusive privilege.

18. The permittee shall not use as a defense in an enforcement action that maintaining compliance with conditions of this permit would have required halting or reducing the permitted activity.

Emission Monitoring

19. While the process is operating, someone familiar with the process shall observe the debarker (LD-1), log bucking (LB-1), bark hog (BH-1), mechanical conveyors to the bark storage bin (BSB-1), sawmill (SM-1), sawmill chipper (SC-1), mechanical conveyors to the sawdust and chip storage bin (SDSB-1/CSB-1), and truck loadout operations from the storage bins (BSB-1/SDSB-1/CSB-1) a minimum of once weekly during daylight hours for greater than normal emissions as determined by previous observations. Whenever observed emissions are greater than normal, the permittee shall initiate corrective action as soon as practicable but no longer than 24 hours from the time of observation, followed by an additional observation to confirm that emissions have been reduced to normal.

Recordkeeping and Reporting Requirements

20. The permittee shall maintain records, including the dates and times, of all weekly observation results, corrective actions taken, and emissions-related maintenance performed. The permittee shall maintain all required records in a permanent form suitable for inspection and shall be readily available for inspection upon request. The permittee shall retain each record for a period of five (5) years from the generation of each record.

21. The Permittee shall submit a Semiannual Monitoring Report for Sawmill and Green End Operations to the Air Division, no later than 60 days after the end of each semiannual reporting period (January 1st to June 30th and July 1st to December 31st). This report shall certify that the weekly observations were accomplished as required and note the nature and date of any episodes of greater-than-normal emissions observed and corrective or emissions-related maintenance actions taken. If a weekly observation was not accomplished, describe the date and reason any required action was not accomplished.

22. The permittee shall submit an Annual Compliance Certification for Sawmill and Green End Operations to the Air Division no later than 60 days following the anniversary of the issuance of this permit. This compliance certification shall include the following:

    (a) The identification of each term or condition of this permit that is the basis of the certification.

    (b) The compliance status, whether continuous or intermittent.

(c) The method(s) used for determining the compliance status of the source, currently and over the reporting period.

(d) Other facts the Department may require to determine the compliance status of the source.

The compliance certification shall contain certification by a responsible official of truth, accuracy and completeness. This certification shall state that, based on information and belief formed after reasonable inquiry, the statements and information in the document are true, accurate and complete.

DRAFT
Date

AIR PERMIT

PERMITTEE: TWO RIVERS LUMBER CO., LLC

FACILITY NAME: TWO RIVERS LUMBER CO., LLC

LOCATION: DEMOPOLIS, MARENGO COUNTY, ALABAMA

PERMIT NUMBER	DESCRIPTION OF EQUIPMENT, ARTICLE OR DEVICE
105-S007-X002	15.4 MBF/hr Continuous, Dual Path Direct-Fired Lumber Dry Kiln (DPK-1) with 38.8 MMBtu/hr Natural Gas-Fired Burner and associated 4 MMBtu/hr Natural Gas-Fired Kiln Condensate Evaporator (CE-1)

In accordance with and subject to the provisions of the Alabama Air Pollution Control Act of 1971, as amended, Ala. Code §§22-28-1 to 22-28-23 (2006 Rplc. Vol. and 2007 Cum. Supp.) (the "AAPCA") and the Alabama Environmental Management Act, as amended, Ala. Code §§22-22A-1 to 22-22A-15 (2006 Rplc. Vol. and 2007 Cum. Supp.), and rules and regulations adopted there under, and subject further to the conditions set forth in this permit, the Permittee is hereby authorized to construct, install and use the equipment, device or other article described above.

ISSUANCE DATE: DRAFT

Alabama Department of Environmental Management

TWO RIVERS LUMBER CO., LLC
DEMOPOLIS, ALABAMA
(PERMIT NO. 105-S007-X002)
PROVISOS

1. This permit is issued on the basis of Rules and Regulations existing on the date of issuance. In the event additional Rules and Regulations are adopted, it shall be the permit holder's responsibility to comply with such rules.

2. This permit is not transferable. Upon sale or legal transfer, the new owner or operator must apply for a permit within 30 days.

3. A new permit application must be made for new sources, replacements, alterations or design changes which may result in the issuance of, or an increase in the issuance of, air contaminants, or the use of which may eliminate or reduce or control the issuance of air contaminants.

4. The Permittee shall keep this permit under file or on display at all times at the site where the facility for which the permit is issued is located and shall make the permit readily available for inspection by any or all persons who may request to see it.

5. Each point of emission, which requires testing, will be provided with sampling ports, ladders, platforms, and other safety equipment to facilitate testing performed in accordance with procedures established by Part 60 of Title 40 of the Code of Federal Regulations, as the same may be amended or revised.

6. In the event there is a breakdown of equipment in such a manner as to cause increased emission of air contaminants for a period greater than **1 hour**, the person responsible for such equipment shall notify the Air Division within an additional 24 hours and provide a statement giving all pertinent facts, including the duration of the breakdown. The Air Division shall be notified when the breakdown has been corrected.

7. This process, including all air pollution control devices and capture systems for which this permit is issued, shall be maintained and operated at all times in a manner so as to minimize the emissions of air contaminants. Procedures for ensuring that the above equipment is properly operated and maintained so as to minimize the emission of air contaminants shall be established.

8. This permit expires and the application is cancelled if construction has not begun within 24 months of the date of issuance of the permit.

9. On completion of construction of the device(s) for which this permit is issued, written notification of the fact is to be submitted to the Chief of the Air Division. The notification shall indicate whether the device(s) was constructed as proposed in the application. The device(s) shall not be operated until authorization to operate is granted by the Chief of the Air Division. Failure to notify the Chief of the Air Division of completion of construction and/or operation without authorization could result in revocation of this permit.

10. Submittal of other reports regarding monitoring records, fuel analyses, operating rates, and equipment malfunctions may be required as authorized in the Department's air pollution control rules and regulations. The Department may require stack emission testing at any time.

11. Additions and revisions to the conditions of this Permit will be made, if necessary, to ensure that the Department's air pollution control rules and regulations are not violated.

12. Nothing in this permit or conditions thereto shall negate any authority granted to the Air Division pursuant to the Alabama Environmental Management Act or regulations issued thereunder.

13. The Air Division must be notified in writing at least 10 working days in advance of all emission tests to be conducted and submitted as proof of compliance with the Department's air pollution control rules and regulations.

    To avoid problems concerning testing methods and procedures, the following shall be included with the notification letter:

    (a) The date the test crew is expected to arrive, the date and time anticipated of the start of the first run, how many and which sources are to be tested, and the names of the persons and/or testing company that will conduct the tests.

    (b) A complete description of each sampling train to be used, including type of media used in determining gas stream components, type of probe lining, type of filter media, and probe cleaning method and solvent to be used (if test procedure requires probe cleaning).

    (c) A description of the process(es) to be tested, including the feed rate, any operating parameter used to control or influence the operations, and the rated capacity.

    (d) A sketch or sketches showing sampling point locations and their relative positions to the nearest upstream and downstream gas flow disturbances.

    A pretest meeting may be held at the request of the source owner or the Department. The necessity for such a meeting and the required attendees will be determined on a case-by-case basis.

    All test reports must be submitted to the Air Division within 30 days of the actual completion of the test, unless an extension of time is specifically approved by the Air Division.

14. Any performance tests required shall be conducted and data reduced in accordance with the test methods and procedures contained in each specific permit condition unless the Director (1) specifies or approves, in specific cases, the use of a reference method with minor changes in methodology, (2) approves the use of an equivalent method, or (3) approves the use of an alternative method, the results of which he has determined to be adequate for indicating whether a specific source is in compliance.

15. This permit is issued with the condition that, should obnoxious odors arising from the plant operations be verified by Air Division inspectors, measures to abate the odorous emissions shall be taken upon a determination by the Alabama Department of Environmental Management that these measures are technically and economically feasible.

16. Precautions shall be taken to prevent fugitive dust emanating from plant roads, grounds, stockpiles, screens, dryers, hoppers, ductwork, etc.

    Plant or haul roads and grounds will be maintained in the following manner so that dust will not become airborne. A minimum of one, or a combination, of the following methods shall be utilized to minimize airborne dust from plant or haul roads and grounds:

    (a) by the application of water any time the surface of the road is sufficiently dry to allow the creation of dust emissions by the act of wind or vehicular traffic;

    (b) by reducing the speed of vehicular traffic to a point below that at which dust emissions are created;

    (c) by paving;

    (d) by the application of binders to the road surface at any time the road surface is found to allow the creation of dust emissions;

    Should one, or a combination, of the above methods fail to adequately reduce airborne dust from plant or haul roads and grounds, alternative methods shall be employed, either exclusively or in combination with one or all of the above control techniques, so that dust will not become airborne. Alternative methods shall be approved by the Department prior to utilization.

17. Precautions shall be taken by the Permittee and its personnel to ensure that no person shall ignite, cause to be ignited, permit to be ignited, or maintain any open fire in such a manner as to cause the Department's rules and regulations applicable to open burning to be violated.

18. The issuance of this permit does not convey any property rights of any sort, or any exclusive privilege.

19. The Permittee shall not use as a defense in an enforcement action that maintaining compliance with conditions of this permit would have required halting or reducing the permitted activity.

20. The Permittee shall not cause or allow the emission of particulate matter (as TSP) in any one hour from this kiln in excess of the amount determined by the following applicable equation:

$$E = 3.59P^{0.62} \quad (P < 30 \text{ TPH})$$

$$E = 17.31P^{0.16} \quad (P \geq 30 \text{ TPH})$$

where E = Emissions in pounds per hour

P = Process rate in tons per hour

21. In accordance with ADEM Admin. Code. r. 335-3-4-.03(1), the Permittee shall not cause or permit the emission of particulate matter from the natural gas burner associated with the kiln condensate evaporator (CE-1) to exceed the amount determined by use of the following equation:

$$E=1.38H^{-0.44}$$

Where: E=Emissions in lb/million BTU

H=Heat Input in millions of BTU/hr

22. The Permittee shall not cause or allow these sources of particulate emissions to discharge more than one 6-minute average opacity greater than 20% in any 60-minute period. At no time shall these sources discharge a 6-minute average opacity of particulate emissions greater than 40%. Opacity will be determined by 40 CFR Part 60, Appendix A, Method 9.

PSD Synthetic Minor Source Limitation

23. The Permittee shall not cause or allow the particulate matter emission rate from the kiln to exceed 1.30 lb/hr, as measured in accordance with 40 CFR Part 60, Appendix A, Method 5. Alternate test methods may be used provided prior approval by the Air Division is granted.

24. The Permittee shall not cause or allow the particulate matter emission rate from the evaporator to exceed 0.07 lb/hr, as measured in accordance with 40 CFR Part 60, Appendix A, Method 5. Alternate test methods may be used provided prior approval by the Air Division is granted.

BACT Requirements

25. The Permittee shall not cause or allow the VOC emissions from the kiln to exceed 3.80 lb/MBF, measured as carbon.

26. Within six (6) months of issuance of Temporary Authorization to Operate this continuous direct-fired kiln (CDK), the Permittee shall develop and submit to the Air Division a site-specific operating and maintenance plan for the CDK. The plan shall identify key parameters to be monitored which are related to VOC emissions from the kiln and the frequency and/or averaging period of the monitoring. Upon Air Division concurrence with the plan, the Permittee shall begin implementation of the proposed monitoring and recordkeeping.

Monitoring, Recordkeeping, and Reporting

27. The Permittee shall maintain records documenting its compliance with the proper operating and maintenance practices required by Proviso 26 of this permit.

28. If this kiln should exceed an applicable limit at any time, the Permittee shall notify the Air Division in writing within two (2) working days of determining that the exceedance occurred.

29. The Permittee shall maintain records of kiln production, including monthly production and 12-month rolling totals. Within ten (10) days of the end of each calendar month, records of the total throughput for the last calendar month shall be recorded and the rolling 12-month total updated.

30. The Permittee shall retain all required records in a permanent form suitable and readily available for inspection for a period of five (5) years from the date of generation of each record.

31. The Permittee shall submit a Semiannual Monitoring Report for this kiln to the Air Division, no later than 60 days after the end of each semiannual reporting period (January 1st to June 30th and July 1st to December 31st). This report shall include a certification that all proper operating and maintenance practices were accomplished as required during the reporting period, and if not, describe the date and reason any required action was not accomplished.

32. The Permittee shall submit an annual compliance certification to the Air Division no later than 60 days following the anniversary of the issuance of this permit. The compliance certification shall include the following:

    (a) The identification of each term or condition of this permit that is the basis of the certification.

    (b) The compliance status, whether continuous or intermittent.

    (c) The method(s) used for determining the compliance status of the source, currently and over the reporting period.

    (d) Other facts the Department may require to determine the compliance status of the source.

    The compliance certification shall contain certification by a responsible official of truth, accuracy and completeness. This certification shall state that, based on information and belief formed after reasonable inquiry, the statements and information in the document are true, accurate and complete.

DRAFT
Date

AIR PERMIT

PERMITTEE: TWO RIVERS LUMBER CO., LLC

FACILITY NAME: TWO RIVERS LUMBER CO., LLC

LOCATION: DEMOPOLIS, MARENGO COUNTY, ALABAMA

PERMIT NUMBER	DESCRIPTION OF EQUIPMENT, ARTICLE OR DEVICE
105-S007-X003	15.4 MBF/hr Continuous, Dual Path Direct-Fired Lumber Dry Kiln (DPK-2) with 38.8 MMBtu/hr Natural Gas-Fired Burner and associated 4 MMBtu/hr Natural Gas-Fired Kiln Condensate Evaporator (CE-2)

In accordance with and subject to the provisions of the Alabama Air Pollution Control Act of 1971, as amended, Ala. Code §§22-28-1 to 22-28-23 (2006 Rplc. Vol. and 2007 Cum. Supp.) (the "AAPCA") and the Alabama Environmental Management Act, as amended, Ala. Code §§22-22A-1 to 22-22A-15 (2006 Rplc. Vol. and 2007 Cum. Supp.), and rules and regulations adopted there under, and subject further to the conditions set forth in this permit, the Permittee is hereby authorized to construct, install and use the equipment, device or other article described above.

ISSUANCE DATE: DRAFT

Alabama Department of Environmental Management

TWO RIVERS LUMBER CO., LLC
DEMOPOLIS, ALABAMA
(PERMIT NO. 105-S007-X003)
PROVISOS

1. This permit is issued on the basis of Rules and Regulations existing on the date of issuance. In the event additional Rules and Regulations are adopted, it shall be the permit holder's responsibility to comply with such rules.

2. This permit is not transferable. Upon sale or legal transfer, the new owner or operator must apply for a permit within 30 days.

3. A new permit application must be made for new sources, replacements, alterations or design changes which may result in the issuance of, or an increase in the issuance of, air contaminants, or the use of which may eliminate or reduce or control the issuance of air contaminants.

4. The Permittee shall keep this permit under file or on display at all times at the site where the facility for which the permit is issued is located and shall make the permit readily available for inspection by any or all persons who may request to see it.

5. Each point of emission, which requires testing, will be provided with sampling ports, ladders, platforms, and other safety equipment to facilitate testing performed in accordance with procedures established by Part 60 of Title 40 of the Code of Federal Regulations, as the same may be amended or revised.

6. In the event there is a breakdown of equipment in such a manner as to cause increased emission of air contaminants for a period greater than **1 hour**, the person responsible for such equipment shall notify the Air Division within an additional 24 hours and provide a statement giving all pertinent facts, including the duration of the breakdown. The Air Division shall be notified when the breakdown has been corrected.

7. This process, including all air pollution control devices and capture systems for which this permit is issued, shall be maintained and operated at all times in a manner so as to minimize the emissions of air contaminants. Procedures for ensuring that the above equipment is properly operated and maintained so as to minimize the emission of air contaminants shall be established.

8. This permit expires and the application is cancelled if construction has not begun within 24 months of the date of issuance of the permit.

9. On completion of construction of the device(s) for which this permit is issued, written notification of the fact is to be submitted to the Chief of the Air Division. The notification shall indicate whether the device(s) was constructed as proposed in the application. The device(s) shall not be operated until authorization to operate is granted by the Chief of the Air Division. Failure to notify the Chief of the Air Division of completion of construction and/or operation without authorization could result in revocation of this permit.

10. Submittal of other reports regarding monitoring records, fuel analyses, operating rates, and equipment malfunctions may be required as authorized in the Department's air pollution control rules and regulations. The Department may require stack emission testing at any time.

11. Additions and revisions to the conditions of this Permit will be made, if necessary, to ensure that the Department's air pollution control rules and regulations are not violated.

12. Nothing in this permit or conditions thereto shall negate any authority granted to the Air Division pursuant to the Alabama Environmental Management Act or regulations issued thereunder.

13. The Air Division must be notified in writing at least 10 working days in advance of all emission tests to be conducted and submitted as proof of compliance with the Department's air pollution control rules and regulations.

    To avoid problems concerning testing methods and procedures, the following shall be included with the notification letter:

    (a) The date the test crew is expected to arrive, the date and time anticipated of the start of the first run, how many and which sources are to be tested, and the names of the persons and/or testing company that will conduct the tests.

    (b) A complete description of each sampling train to be used, including type of media used in determining gas stream components, type of probe lining, type of filter media, and probe cleaning method and solvent to be used (if test procedure requires probe cleaning).

    (c) A description of the process(es) to be tested, including the feed rate, any operating parameter used to control or influence the operations, and the rated capacity.

    (d) A sketch or sketches showing sampling point locations and their relative positions to the nearest upstream and downstream gas flow disturbances.

    A pretest meeting may be held at the request of the source owner or the Department. The necessity for such a meeting and the required attendees will be determined on a case-by-case basis.

    All test reports must be submitted to the Air Division within 30 days of the actual completion of the test, unless an extension of time is specifically approved by the Air Division.

14. Any performance tests required shall be conducted and data reduced in accordance with the test methods and procedures contained in each specific permit condition unless the Director (1) specifies or approves, in specific cases, the use of a reference method with minor changes in methodology, (2) approves the use of an equivalent method, or (3) approves the use of an alternative method, the results of which he has determined to be adequate for indicating whether a specific source is in compliance.

15. This permit is issued with the condition that, should obnoxious odors arising from the plant operations be verified by Air Division inspectors, measures to abate the odorous emissions shall be taken upon a determination by the Alabama Department of Environmental Management that these measures are technically and economically feasible.

16. Precautions shall be taken to prevent fugitive dust emanating from plant roads, grounds, stockpiles, screens, dryers, hoppers, ductwork, etc.

    Plant or haul roads and grounds will be maintained in the following manner so that dust will not become airborne. A minimum of one, or a combination, of the following methods shall be utilized to minimize airborne dust from plant or haul roads and grounds:

    (a) by the application of water any time the surface of the road is sufficiently dry to allow the creation of dust emissions by the act of wind or vehicular traffic;

    (b) by reducing the speed of vehicular traffic to a point below that at which dust emissions are created;

    (c) by paving;

    (d) by the application of binders to the road surface at any time the road surface is found to allow the creation of dust emissions;

    Should one, or a combination, of the above methods fail to adequately reduce airborne dust from plant or haul roads and grounds, alternative methods shall be employed, either exclusively or in combination with one or all of the above control techniques, so that dust will not become airborne. Alternative methods shall be approved by the Department prior to utilization.

17. Precautions shall be taken by the Permittee and its personnel to ensure that no person shall ignite, cause to be ignited, permit to be ignited, or maintain any open fire in such a manner as to cause the Department's rules and regulations applicable to open burning to be violated.

18. The issuance of this permit does not convey any property rights of any sort, or any exclusive privilege.

19. The Permittee shall not use as a defense in an enforcement action that maintaining compliance with conditions of this permit would have required halting or reducing the permitted activity.

20. The Permittee shall not cause or allow the emission of particulate matter (as TSP) in any one hour from this kiln in excess of the amount determined by the following applicable equation:

$$E = 3.59P^{0.62} \quad (P < 30 \text{ TPH})$$

$$E = 17.31P^{0.16} \quad (P \geq 30 \text{ TPH})$$

where E = Emissions in pounds per hour

P = Process rate in tons per hour

21. In accordance with ADEM Admin. Code. r. 335-3-4-.03(1), the Permittee shall not cause or permit the emission of particulate matter from the natural gas burner associated with the kiln condensate evaporator (CE-2) to exceed the amount determined by use of the following equation:

$$E=1.38H^{-0.44}$$

Where: E=Emissions in lb/million BTU

H=Heat Input in millions of BTU/hr

22. The Permittee shall not cause or allow these sources of particulate emissions to discharge more than one 6-minute average opacity greater than 20% in any 60-minute period. At no time shall these sources discharge a 6-minute average opacity of particulate emissions greater than 40%. Opacity will be determined by 40 CFR Part 60, Appendix A, Method 9.

PSD Synthetic Minor Source Limitation

23. The Permittee shall not cause or allow the particulate matter emission rate from the kiln to exceed 1.30 lb/hr, as measured in accordance with 40 CFR Part 60, Appendix A, Method 5. Alternate test methods may be used provided prior approval by the Air Division is granted.

24. The Permittee shall not cause or allow the particulate matter emission rate from the evaporator to exceed 0.07 lb/hr, as measured in accordance with 40 CFR Part 60, Appendix A, Method 5. Alternate test methods may be used provided prior approval by the Air Division is granted.

BACT Requirements

25. The Permittee shall not cause or allow the VOC emissions from the kiln to exceed 3.80 lb/MBF, measured as carbon.

26. Within six (6) months of issuance of Temporary Authorization to Operate this continuous direct-fired kiln (CDK), the Permittee shall develop and submit to the Air Division a site-specific operating and maintenance plan for the CDK. The plan shall identify key parameters to be monitored which are related to VOC emissions from the kiln and the frequency and/or averaging period of the monitoring. Upon Air Division concurrence with the plan, the Permittee shall begin implementation of the proposed monitoring and recordkeeping.

Monitoring, Recordkeeping, and Reporting

27. The Permittee shall maintain records documenting its compliance with the proper operating and maintenance practices required by Proviso 26 of this permit.

28. If this kiln should exceed an applicable limit at any time, the Permittee shall notify the Air Division in writing within two (2) working days of determining that the exceedance occurred.

29. The Permittee shall maintain records of kiln production, including monthly production and 12-month rolling totals. Within ten (10) days of the end of each calendar month, records of the total throughput for the last calendar month shall be recorded and the rolling 12-month total updated.

30. The Permittee shall retain all required records in a permanent form suitable and readily available for inspection for a period of five (5) years from the date of generation of each record.

31. The Permittee shall submit a Semiannual Monitoring Report for this kiln to the Air Division, no later than 60 days after the end of each semiannual reporting period (January 1st to June 30th and July 1st to December 31st). This report shall include a certification that all proper operating and maintenance practices were accomplished as required during the reporting period, and if not, describe the date and reason any required action was not accomplished.

32. The Permittee shall submit an annual compliance certification to the Air Division no later than 60 days following the anniversary of the issuance of this permit. The compliance certification shall include the following:

    (a) The identification of each term or condition of this permit that is the basis of the certification.

    (b) The compliance status, whether continuous or intermittent.

    (c) The method(s) used for determining the compliance status of the source, currently and over the reporting period.

    (d) Other facts the Department may require to determine the compliance status of the source.

    The compliance certification shall contain certification by a responsible official of truth, accuracy and completeness. This certification shall state that, based on information and belief formed after reasonable inquiry, the statements and information in the document are true, accurate and complete.

DRAFT
Date

AIR PERMIT

PERMITTEE: TWO RIVERS LUMBER CO., LLC

FACILITY NAME: TWO RIVERS LUMBER CO., LLC

LOCATION: DEMOPOLIS, MARENGO COUNTY, ALABAMA

PERMIT NUMBER	DESCRIPTION OF EQUIPMENT, ARTICLE OR DEVICE
105-S007-X004	Planer Mill (PM-1) Operations with a Shavings Storage Bin (SSB-1) and a Cyclofilter (CF-1) [SMS]

In accordance with and subject to the provisions of the Alabama Air Pollution Control Act of 1971, as amended, Ala. Code §§22-28-1 to 22-28-23 (2006 Rplc. Vol. and 2007 Cum. Supp.) (the "AAPCA") and the Alabama Environmental Management Act, as amended, Ala. Code §§22-22A-1 to 22-22A-15 (2006 Rplc. Vol. and 2007 Cum. Supp.), and rules and regulations adopted there under, and subject further to the conditions set forth in this permit, the Permittee is hereby authorized to construct, install and use the equipment, device or other article described above.

ISSUANCE DATE: DRAFT

Alabama Department of Environmental Management

TWO RIVER LUMBER CO., LLC
DEMOPOLIS, ALABAMA
(PERMIT NO. 105-S007-X004)
PROVISOS

1. This permit is issued on the basis of Rules and Regulations existing on the date of issuance. In the event additional Rules and Regulations are adopted, it shall be the permit holder's responsibility to comply with such rules.

2. This permit is not transferable. Upon sale or legal transfer, the new owner or operator must apply for a permit within 30 days.

3. A new permit application must be made for new sources, replacements, alterations or design changes which may result in the issuance of, or an increase in the issuance of, air contaminants, or the use of which may eliminate or reduce or control the issuance of air contaminants.

4. The Permittee shall keep this permit under file or on display at all times at the site where the facility for which the permit is issued is located and shall make the permit readily available for inspection by any or all persons who may request to see it.

5. Each point of emission, which requires testing, will be provided with sampling ports, ladders, platforms, and other safety equipment to facilitate testing performed in accordance with procedures established by Part 60 of Title 40 of the Code of Federal Regulations, as the same may be amended or revised.

6. In the event there is a breakdown of equipment in such a manner as to cause increased emission of air contaminants for a period greater than **1 hour**, the person responsible for such equipment shall notify the Air Division within an additional 24 hours and provide a statement giving all pertinent facts, including the duration of the breakdown. The Air Division shall be notified when the breakdown has been corrected.

7. This process, including all air pollution control devices and capture systems for which this permit is issued, shall be maintained and operated at all times in a manner so as to minimize the emissions of air contaminants. Procedures for ensuring that the above equipment is properly operated and maintained so as to minimize the emission of air contaminants shall be established.

8. This permit expires and the application is cancelled if construction has not begun within 24 months of the date of issuance of the permit.

9. On completion of construction of the device(s) for which this permit is issued, written notification of the fact is to be submitted to the Chief of the Air Division. The notification shall indicate whether the device(s) was constructed as proposed in the application. The device(s) shall not be operated until authorization to operate is granted by the Chief of the Air Division. Failure to notify the Chief of the Air Division of completion of construction and/or operation without authorization could result in revocation of this permit.

10. Submittal of other reports regarding monitoring records, fuel analyses, operating rates, and equipment malfunctions may be required as authorized in the Department's air pollution control rules and regulations. The Department may require stack emission testing at any time.

11. Additions and revisions to the conditions of this Permit will be made, if necessary, to ensure that the Department's air pollution control rules and regulations are not violated.

12. Nothing in this permit or conditions thereto shall negate any authority granted to the Air Division pursuant to the Alabama Environmental Management Act or regulations issued thereunder.

13. The Air Division must be notified in writing at least 10 working days in advance of all emission tests to be conducted and submitted as proof of compliance with the Department's air pollution control rules and regulations.

    To avoid problems concerning testing methods and procedures, the following shall be included with the notification letter:

    (a) The date the test crew is expected to arrive, the date and time anticipated of the start of the first run, how many and which sources are to be tested, and the names of the persons and/or testing company that will conduct the tests.

    (b) A complete description of each sampling train to be used, including type of media used in determining gas stream components, type of probe lining, type of filter media, and probe cleaning method and solvent to be used (if test procedure requires probe cleaning).

    (c) A description of the process(es) to be tested, including the feed rate, any operating parameter used to control or influence the operations, and the rated capacity.

    (d) A sketch or sketches showing sampling point locations and their relative positions to the nearest upstream and downstream gas flow disturbances.

    A pretest meeting may be held at the request of the source owner or the Department. The necessity for such a meeting and the required attendees will be determined on a case-by-case basis.

    All test reports must be submitted to the Air Division within 30 days of the actual completion of the test, unless an extension of time is specifically approved by the Air Division.

14. Any performance tests required shall be conducted and data reduced in accordance with the test methods and procedures contained in each specific permit condition unless the Director (1) specifies or approves, in specific cases, the use of a reference method with minor changes in methodology, (2) approves the use of an equivalent method, or (3) approves the use of an alternative method, the results of which he has determined to be adequate for indicating whether a specific source is in compliance.

15. This permit is issued with the condition that, should obnoxious odors arising from the plant operations be verified by Air Division inspectors, measures to abate the odorous emissions shall be taken upon a determination by the Alabama Department of Environmental Management that these measures are technically and economically feasible.

16. Precautions shall be taken to prevent fugitive dust emanating from plant roads, grounds, stockpiles, screens, dryers, hoppers, ductwork, etc.

    Plant or haul roads and grounds will be maintained in the following manner so that dust will not become airborne. A minimum of one, or a combination, of the following methods shall be utilized to minimize airborne dust from plant or haul roads and grounds:

    (a) by the application of water any time the surface of the road is sufficiently dry to allow the creation of dust emissions by the act of wind or vehicular traffic;

    (b) by reducing the speed of vehicular traffic to a point below that at which dust emissions are created;

    (c) by paving;

    (d) by the application of binders to the road surface at any time the road surface is found to allow the creation of dust emissions;

    Should one, or a combination, of the above methods fail to adequately reduce airborne dust from plant or haul roads and grounds, alternative methods shall be employed, either exclusively or in combination with one or all of the above control techniques, so that dust will not become airborne. Alternative methods shall be approved by the Department prior to utilization.

17. Precautions shall be taken by the Permittee and its personnel to ensure that no person shall ignite, cause to be ignited, permit to be ignited, or maintain any open fire in such a manner as to cause the Department's rules and regulations applicable to open burning to be violated.

18. The Permittee shall not cause or permit the emissions of particulate matter in any 1-hour period from this process to exceed the amount determined by use of the following equation:

    $E=3.59P^{0.62}$ ($P < 30$ tons per hour)

    OR

    $E=17.31P^{0.16}$ ($P \geq 30$ tons per hour)

    Where: E=Emissions in pounds per hour
    P=Process weight in tons per hour

19. The Permittee shall not cause or allow these sources of particulate emissions to discharge more than one 6-minute average opacity greater than 20% in any 60-minute period. At no time shall these sources discharge a 6-minute average opacity of particulate emissions greater than 40%. Opacity will be determined by 40 CFR Part 60, Appendix A, Method 9.

20. The issuance of this permit does not convey any property rights of any sort, or any exclusive privilege.

21. The Permittee shall not use as a defense in an enforcement action that maintaining compliance with conditions of this permit would have required halting or reducing the permitted activity.

PSD Synthetic Minor Source Limitation

22. The Permittee shall not cause or allow the particulate matter emission rate from the cyclofilter exhaust (CF-1) to exceed 0.048 lb/hr, as measured in accordance with 40 CFR Part 60, Appendix A, Method 5. Alternate test methods may be used provided prior approval by the Air Division is granted.

Emission Monitoring

23. While the process is operating, someone familiar with the process shall visually observe the cyclofilter exhaust (CF-1) at least weekly during daylight hours for the presence of visible emissions.

24. While the process is operating, someone familiar with the process shall visually observe the planer mill (PM-1) and the planer shavings storage bin (SSB-1) at least weekly during daylight hours for greater than normal emissions as determined by previous observations of normal operations.

25. Whenever observed emissions are greater than normal from the planer mill (PM-1) and/or planer shavings storage bin (SSB-1), or if any visible emissions are observed from the cyclofilter exhaust (CF-1), corrective action shall be initiated as soon as practicable but no longer than 24 hours from the time of observation, followed by an additional observation to confirm that emissions have been reduced to normal (PM-1/SSB-1) or eliminated (CF-1).

26. The cyclofilter shall be physically inspected for proper operation and cleaned, if needed, at least annually, but more frequently if visible emissions are observed.

Recordkeeping and Reporting Requirements

27. The Permittee shall maintain records, including dates, times, and results of all visual observations; corrective actions taken; and cyclofilter inspections, cleanings, and emissions-related maintenance in a permanent form suitable for inspection for a period of at least five (5) years from the date of generation of each record. The records shall be made available for inspection upon request.

28. The Permittee shall submit a Semiannual Monitoring Report for the Planer Mill Operations to the Air Division, no later than 60 days after the end of each semiannual reporting period (January 1st to June 30th and July 1st to December 31st). The report shall:

    a) Certify whether the emission monitoring requirements were accomplished as required, and if not, describe the date and reason any required monitoring was not accomplished;

b) Provide the date, time, and duration of any instance that greater than normal emissions were observed from the planer mill or planer shavings storage bin, or any instance of the presence of visible emissions from the cyclofilter exhaust;

c) Provide the nature and date of any corrective actions taken or preventative measures adopted following an observation of greater than normal emissions, or the presence of visible emissions from the cyclofilter exhaust; and

d) Provide the dates of any physical inspections and/or cleanings of the cyclofilter performed during the reporting period.

29. The Permittee shall submit an annual compliance certification to the Air Division no later than 60 days following the anniversary of the issuance of this permit. The compliance certification shall include the following:

a) The identification of each term or condition of this permit that is the basis of the certification.

b) The compliance status, whether continuous or intermittent.

c) The method(s) used for determining the compliance status of the source, currently and over the reporting period.

d) Other facts the Department may require to determine the compliance status of the source.

The compliance certification shall contain certification by a responsible official of truth, accuracy and completeness. This certification shall state that, based on information and belief formed after reasonable inquiry, the statements and information in the document are true, accurate and complete.

DRAFT
Date

PSD Notification List for Two Rivers Lumber Co, LLC

Organization	Documents Transmitted
Chief, Air Permit Section US EPA, Region 4 Air, Pesticides, and Toxics Management Division Atlanta Federal Center 61 Forsyth Street, SW Atlanta, GA 30303-8960	Legal Notice (via e-mail) Engineering Analysis (via e-mail) Application (via e-mail)
Director State Health Planning Agency RSA Union 100 N Union Street, Suite 870 Montgomery, AL 36904	Legal Notice
Director Game and Fish Division Department of Conservation 64 Union Street Montgomery, AL 36130	Legal Notice
Director State Parks Division Department of Conservation 64 Union Street Montgomery, AL 36130	Legal Notice
Director State Lands Division Department of Conservation 64 Union Street Montgomery, AL 36130	Legal Notice
Executive Director Alabama-Tombigbee Regional Planning Commission 107 Broad Street Camden, AL 36726	Legal Notice
Chairman Marengo County Commission P O Box 480715 Linden, AL 367480715	Legal Notice
City of Demopolis Attention: City Clerk P.O. Box 580 Demopolis, AL 36732 211 N Walnut Street	Legal Notice Engineering Analysis Application

PSD Notification List for Two Rivers Lumber Co, LLC

Organization	**Documents Transmitted**
Demopolis, AL 36732	
Jay McElroy Two Rivers Lumber Co, LLC P.O. Box 104 Cuba, AL 36907	Legal Notice