Moundville Biodiesel Facility
Moundville, Alabama
ADEM VCP Site #: 461-125-117

Fact Sheet

A Voluntary Cleanup Program (VCP) Cleanup Plan has been found to be technically adequate by the Alabama Department of Environmental Management for the Former Eastman Chemical site. Allam Alternative Energy, LLC, and Lies Energy, LLC, currently own the facility located in Moundville, Alabama. This fact sheet has been prepared to briefly advise the public of the principal legal and policy issues of the VCP.

I. VCP PROCESS

The VCP provides a mechanism for the implementation of a cleanup program that encourages applicants to voluntarily assess, remediate, and reuse rural and urban areas of actual or perceived contamination. The program does not relieve any "responsible person" for the liability for administrative, civil, or criminal fines or penalties which are otherwise authorized by law and imposed as a result of the illegal or unpermitted disposal of solid waste, hazardous waste, hazardous constituents, hazardous substances, petroleum products, and/or pollutants to the land, air, or waters of the State on an identified property. The program is designed to expedite the voluntary cleanup process and has been designed for entry at any stage of the cleanup process as long as all applicable criteria have been met up to the point of entry.

II. PROCEDURES FOR REACHING A FINAL DECISION

The Alabama Department of Environmental Management (ADEM) is proposing to issue Allam Alternative Energy, LLC, and Lies Energy, LLC, a final decision for the site remediation.

ADEM Admin Code R. 335-15-6-.02 requires that the public be given a 30-day comment period from the date of the notice. The comment period will begin on November 2, 2016, which is the date of publication of the public notice in major local newspaper(s) of general circulation, and will end on December 2, 2016.

All persons wishing to comment on any of the conditions of the VCP Remediation should submit their comments in writing to the Alabama Department of Environmental Management, Permits and Services Division, 1400 Coliseum Blvd. (Zip 36110). P.O. Box 301463 (Zip 36130-1463) Montgomery, Alabama, ATTENTION: Mr. Russell Kelly. Written comments on the VCP activities should be submitted to the Alabama Department of Environmental Management and be received by 5:00 p.m. on December 2, 2016.

ADEM will consider all written comments received during the comment period while making a final decision on this issue. When the Department makes its final decision, notice will be given to the applicant and each person who has submitted written comments or requested notice of the final decision.

III. FACILITY DESIGN

Terracon has completed Site Investigation activities under the VCP at the Moundville Biodiesel Facility located at 12982 Cherokee Bend Drive, Moundville, Tuscaloosa County, Alabama. In 1976 the site was developed as Eastman Resins, Inc. Since approximately 2005, the site has been in operation as a biodiesel production facility. The site is currently developed and being operated by Veros Energy, LLC. The facility produces biodiesel utilizing animal fats and vegetable oils. The site is developed with an office building, warehouse, and various other small structures. The site encompasses 55 acres and is bound to the north by the Black Warrior River and to the west and south by Carthage Branch. Engineering controls will be used at this site to eliminate or minimize potential exposures associated with future use and/or development.

IV. TECHNICAL CONTACT

Crystal Collins, Project Manager
Redevelopment Section
Environmental Services Branch
Land Division
Alabama Department of Environmental Management
1400 Coliseum Boulevard (Zip 36110)
P.O. Box 301463 (Zip 36130-1463)
Montgomery, Alabama
(334) 271-3073

September 27, 2016

Alabama Department of Environmental Management
Redevelopment Section, Land Division
Post Office Box 301463
Montgomery, Alabama 36130-1463

Attention: Ms. Crystal Collins, Project Manager

RE: Addendum to Voluntary Cleanup Plan
Moundville Biodiesel Facility
12982 Cherokee Bend Drive
Moundville, Tuscaloosa County, Alabama
VCP Site No.: 461-125-117
Terracon Project No.: E1157122

Dear Ms.Collins:

On behalf of Veros Energy, LLC, Allam Alternative Energy, LLC, and Lies Energy, LLC, Terracon Consultants, Inc. (Terracon) has prepared this Addendum to the Voluntary Cleanup Plan for the above-referenced site.

On June 15, 2016 Terracon submitted a Voluntary Cleanup Plan to the Alabama Department of Environmental Management (ADEM) for the Moundville Biodiesel Facility. An Alabama Risk-Based Corrective Action (ARBCA) Evaluation was conducted as part of the Cleanup Plan. Cumulative risks to the on-site commercial worker were calculated to be above allowable levels due to the indoor vapor inhalation pathway. As such, engineering controls were proposed beneath enclosed structures that are occupied by commercial workers for an average of at least ten hours per week (occupied building). The occupied buildings where engineering controls were proposed include the office building, the control room, and the maintenance shop (Exhibit 2, June 15, 2016 Voluntary Cleanup Plan; Attachment A). The engineering controls proposed for the site included installation of a vapor barrier and/or a sub-slab depressurization system. The Cleanup Plan stated that the most appropriate option for each occupied building would be selected based on condition of the existing slabs and consideration of installation procedures as they relate to site operations. As requested by ADEM, specific approaches have been proposed for each occupied building as described below.

<u>Geo-Seal ™ Vapor Intrusion Barrier – Control Room and Maintenance Shop</u>

A chemically resistant, spray-applied composite vapor barrier system will be installed atop the existing slab of the control room and maintenance shop and completely sealed to foundation walls and around utility penetrations. The spray-applied composite vapor barrier will consist of a

minimum 96-mil thick system, containing two 18-mil chemically resistant high-density polyethylene (HDPE) sheets encompassing a 60-mil spray-applied copolymer modified asphaltic membrane. A new two to three-inch concrete slab will be poured atop the spray-applied composite vapor barrier following installation. Additional information for Geo-Seal ™ including product data sheets, installation details, and material data safety sheets is included with this addendum and Attachment B.

Sub-slab Depressurization System – Office Building

Due to the complexity of vapor barrier installation procedures as they relate to site operations at the office building, an active sub-slab depressurization (SSD) system is proposed at this location in lieu of the Geo-Seal ™ vapor barrier. The SSD system will provide a preferential pathway for vapor emissions from beneath the slab to outside air. The system will create negative pressure beneath the slab through the installation of extraction points, an electric blower, and riser piping to the roof of the building. Prior to installation, pressure field diagnostics will be performed in order to evaluate the transmissivity of the sub-slab material and determine the design specifications necessary to achieve depressurization goals at the office building. The SSD system will be installed as per ASTM E2121-03, which has guidelines for system design, motor placement, and system discharge. Additional information for the proposed SSD system, including a draft SSD system layout at the office building and draft extraction point and fan assembly details, is included with this addendum as Attachment C.

Conclusions

The above recommendations have been developed with the ultimate end use of the property in mind. Given the proposed future use of the site as continued industrial property, the above recommendations will mitigate the realistic exposure potential of current and future workers to the COCs currently in groundwater and soil vapor beneath the site. Mitigating the realistic exposure pathway to current and future on-site receptors will result in an overall environmental benefit to the surrounding community.

If the recommendations herein meet the requirements of ADEM, the proposed engineering controls will be implemented at the site and a draft Class 1 Environmental Covenant will be delivered to ADEM for approval. Following approval of the draft environmental covenant by ADEM, a finalized covenant will be filed with the Tuscaloosa County Probate Office. Upon implementation of the engineering and institutional controls, a Cleanup Implementation Report will be submitted to ADEM detailing the activities proposed in the June 15, 2016 Cleanup Plan and this addendum. Upon receipt of the Cleanup Implementation Report, Terracon requests that ADEM consider issuing a Conditional Letter of Concurrence for the site.

If you have any questions regarding this submittal or if we may be of further assistance, please contact our office at 205-942-1289.

Sincerely,
Terracon Consultants, Inc.

Trey G. Noland, P.G.
Group Manager

Frank M. Nowicki
Senior Project Professional

Attachment A: Exhibit 2, June 15, 2016 Voluntary Cleanup Plan
Attachment B: Geo-Seal ™ Submittal Package
Attachment C: Draft SSD System Design

ec: Rob McNaughton, Veros Energy, LLC
Todd Allam, Allam Alternative Energy, LLC
Mike Lies, Lies Energy, LLC
John Nies, HeroBX
Scott Newell, HeroBX
Michael Shiner, Esq., Tucker Arsensberg, P.C.
Mary King, P.G., Civil & Environmental Consultants, Inc.

ATTACHMENT A

BLACK WARRIOR RIVER

WOODED

MW-8

MW-9

MW-6

AREA C

MW-10

MW-16

FORMER ASPHALT PLANT

MW-5D

FORMER AERATION TANK

AREA B

MW-11

MW-13S

MW-13D

MW-14

FORMER FIRE POND

FORMER SETTLING POND

MW-4

FORMER T-PIPE POND

AREA G

MAINTENANCE SHOP

AREA A

CONTROL ROOM

MW-12

MOUND STATE ARCHAEOLOGICAL PARK

MW-3

AREA D

WAREHOUSE

MW-15

CARTHAGE BRANCH

FORMER DRUM STORAGE AREA

FORMER KRUMBHAAR PLANT

OFFICE

UNDERGROUND STORM DRAIN

RURAL RESIDENTIAL PROPERTIES

MW-2

FORMER REFUELING AREA

AREA E

MW-1

AREA F

RAILROAD

N

0 260

Approximate Scale (Feet)

LEGEND

- APPROXIMATE SITE BOUNDARY
- SHALLOW MONITORING WELL LOCATION
- DEEP MONITORING WELL LOCATION
- DESTROYED MONITORING WELL LOCATION
- ABOVE-GROUND STORAGE TANK
- RESTRICTED USE AREA*
- SPRING/SEEP LOCATION

THIS DIAGRAM IS FOR GENERAL LOCATION ONLY, AND IS NOT INTENDED FOR CONSTRUCTION PURPOSES

* LOCATIONS ARE APPROXIMATE BASED ON OCTOBER 3, 2003 WARRANTY DEED

Project Mngr: TGN	Project No. E1157122	Terracon Consulting Engineers and Scientists	SITE DIAGRAM
Drawn By: RLW	Scale: AS SHOWN	110 12th Street North Birmingham, Alabama 35203	VOLUNTARY CLEANUP PROGRAM
Checked By: TGN/MRG	File No. VCRE1157122-2	(205) 942-1289 (205) 443-5302	VEROS ENERGY, LLC
Approved By: TGN	Date: NOV. 2015		12982 CHEROKEE BEND DRIVE
			MOUNDVILLE, AL

EXHIBIT 2

ATTACHMENT B

Land Science™ Technologies

Geo-Seal™

Advanced Vapor Management Technology

Biodiesel Facility - Moundville, AL

Geo-Seal® Vapor Intrusion Barrier System

Land Science™ Technologies

Geo-Seal™

Advanced Vapor Management Technology

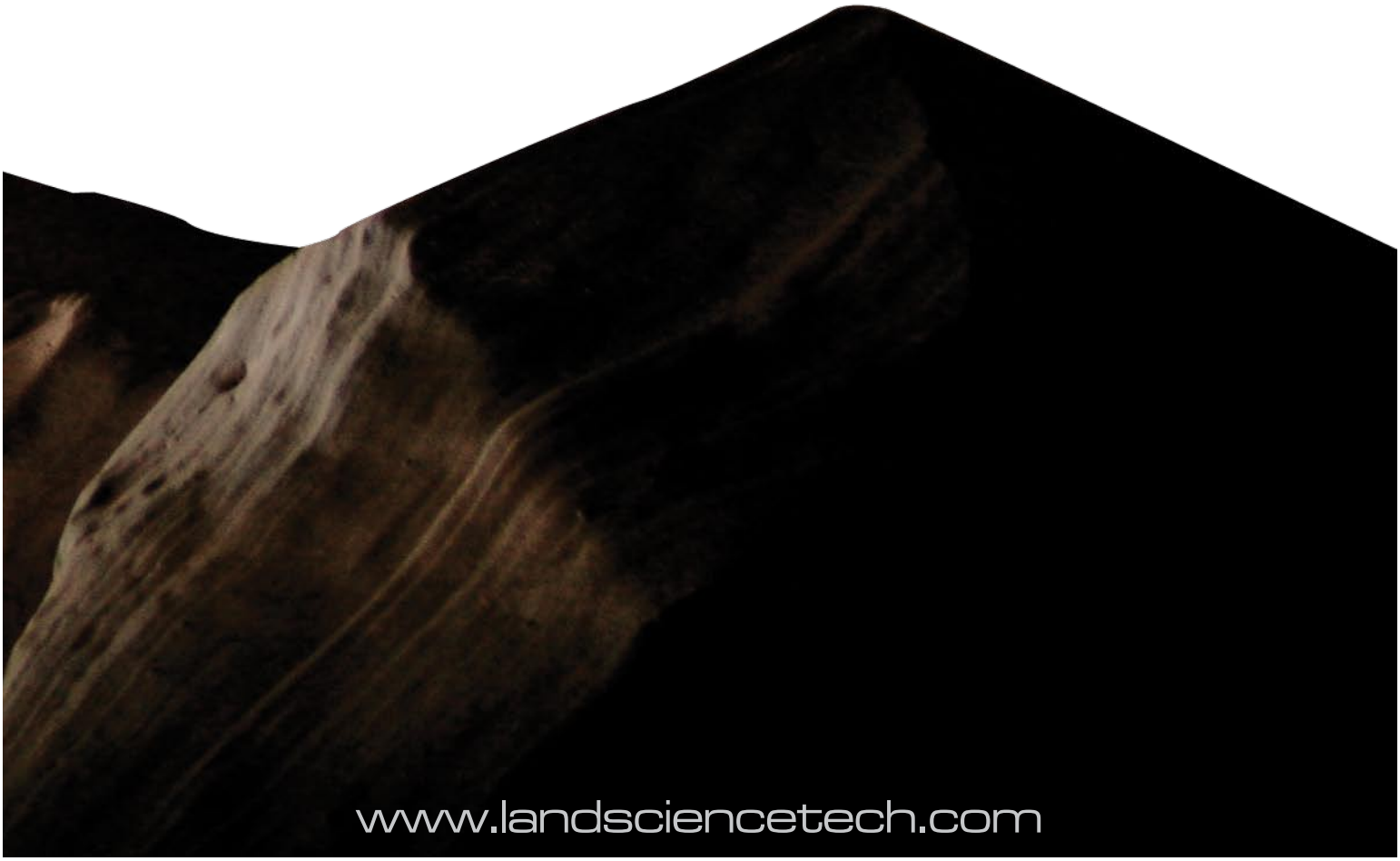

www.landsciencetech.com

HISTORY

Land Science™
Technologies

***Land Science Technologies* (LST) ™** is dedicated to providing advanced technologies for sustainable land development. A goal of LST is to provide innovative and technically sound development solutions for underutilized environmentally impaired properties, commonly referred to as Brownfields.

LST's cost-effective, industry leading technologies offer engineering firms and real estate developers solutions to issues facing the development of Brownfields today. LST is a division of ***Regenesis, Inc.***, a global leader in groundwater and soil remediation technologies since 1994.

REGENESIS
www.regenesis.com

Geo-Seal™

***Geo-Seal*™** is an advanced composite gas vapor management technology (patent pending) designed to eliminate potential indoor air quality health risks associated with subsurface contaminant vapor intrusion.

Geo-Seal is an ideal gas vapor management technology designed for use on Brownfields or any type of environmentally impaired site, i.e. manufacturing facilities, dry cleaners, gasoline service stations, landfills, etc. ***Geo-Seal*** is placed between the foundation of the building and the soil pad to eliminate vapor exposure pathways and stop contaminated vapors from permeating through the slab. Vapor management systems incorporating both ***Geo-Seal*** vapor barrier and *Vapor-Vent* ventilation provide industry leading sub-foundation vapor mitigation technology. By deploying these systems developers ensure a healthy indoor environment while reducing the cost of site remediation and expediting site construction.

Triple-Layer Protection

The triple-layer system used in ***Geo-Seal*** provides maximum redundancy and protection against the formation of vapor pathways both during and after installation. Such pathways can result from chemically induced materials breakdown, punctures, and seam weaknesses resulting from poor detail work and/or application installation imperfections around penetrations. ***Geo-Seal*** also provides unmatched protection from a range of contaminant vapors including those from petroleum-based products and chlorinated hydrocarbons.

Field-Proven Technology

Geo-Seal is manufactured in partnership with E-Pro™ Systems which has over 20 years experience in the building products industry and a leading track record in barrier systems for vapor and waterproofing applications.

FEATURES

Geo-Seal™ Triple-Layer System
(2 Chemical Resistant Layers + 1 Spray Applied Core Layer)

Dual Chemical Resistant Layers
The ***BASE*** layer (bottom) and the ***BOND*** layer (top) are composed of a high-density polyethylene material bonded to a geo-textile on the out-facing side. High density polyethylene is known for chemical resistance, high tensile strength, excellent stress-crack resistance and for highly reliable subsurface containment. The geo-textile which is physically bonded to the chemical resistant layer accomplishes two goals; it allows the BOND layer to adhere to slab, and provides a friction course between the BASE layer and the soil.

Spray Applied CORE Layer
The CORE layer is composed of a unique, elastic co-polymer modified asphaltic membrane which also provides additional protection against vapor transmission. This layer creates a highly-effective seal around slab penetrations and eliminates the need for mechanical fastening at termination points.

Chemical Resistance
The dual chemical resistant layers combined with the spray CORE form a barrier resistant to the most concentrated chemical pollutant vapors.

Enhanced Curing
Geo-Seal is "construction friendly" as the reduced curing time of the ***Geo-Seal*** CORE layer and the ability to apply it in cooler temperatures ensures quick installation and minimizes the impact on construction schedules.

Puncture Resistance
Geo-Seal forms a highly puncture resistant barrier that greatly reduces the chance of damage occurring after installation and prior to the placement of concrete.

Removing Contained Vapors
Vapor-Vent can be used in conjunction with ***Geo-Seal*** to alleviate the buildup of vapors beneath structures as a result of vapor barrier implementation. ***Vapor-Vent*** can be utilized as an active or passive ventilation system depending on the requirements of the design engineer.

Certified Applicator Network
The application of ***Geo-Seal*** and ***Vapor-Vent*** can be performed by any one of many certified applicators throughout the country.

Service and Support
Geo-Seal representatives are available to provide job and site specific assistance. A local representative can ensure ***Geo-Seal*** and ***Vapor-Vent*** is installed as per the specification.

DIAGRAM

Geo-Seal™

Application Diagram

Diagram Labels

1 **Geo-Seal BASE** is the foundational, chemical resistant, bottom layer that is rolled out onto the exposed soil surface. This layer is applied with a geo-textile side facing down to provide greater friction with the soil surface. The Geo-Seal BASE Layer is a high-quality substrate and enables the second, spray-applied CORE Layer to be free of shadowing and pinholes.

2 **Geo-Seal CORE** is the spray-applied, middle layer of the Geo-Seal barrier that ensures proper sealing of potential vapor pathways. Problematic pipe penetrations and effective seals at termination points are easily detailed and sealed with the utilization of the CORE Layer.

3 **Geo-Seal BOND** is the proprietary top layer that completes the triple layered Geo-Seal barrier. The BOND layer serves two purposes; it helps protect the system from getting punctured after installation and provides the final layer of chemical resistance.

4 **Vapor-Vent:**

- When used with Geo-Seal provides maximum protection against contaminated vapor
- Eliminates the need for trenching
- Cost-effective compared to pipe and gravel systems
- Eliminates long-term costs when configured as a passive system
- Allows for rapid installation

Land Science™
Technologies

Land Science Technologies
1011 Calle Sombra
Suite 110
San Clemente, CA 92673
Ph. 949-366-8000
Fax. 949-366-8090
www.landsciencetech.com

FSC
Mixed Sources
Product group from well-managed forests, controlled sources and recycled wood or fiber
www.fsc.org Cert no. SW-COC-1851
© 1996 Forest Stewardship Council
25%
Printed on recycled paper using soy inks

Land Science™ Technologies
www.landsciencetech.com

Product Data Sheet

Geo-Seal™ CORE

Geo-Seal™ CORE is an elastic water-based co-polymer modified asphaltic membrane spray applied to a minimum dry thickness of 60 mils. The CORE material has exceptional bonding to a wide variety of substrates and will build up to the specified thickness in a single application. Since the CORE material is water-based, there is little or no odor during or after product application, making it safe for use in sensitive areas. This material can also be applied to green concrete as it exhibits exceptional bonding capability that will not delaminate from the intended substrate. The seamless application of the CORE material makes for easy installation around penetrations, uneven surfaces and oddly shaped areas.

COVERAGES	TEST METHOD	UNITS
Application to BASE Layer		60 mils (17 ft^2/gal)
Typical Uncured Properties		
Specific Gravity	ASTM D 244	1.00
Viscosity	ASTM D 1200	>25 centipoise
PH		12.3
Flammability	ASTM D 3143	500^0 F
Color		Brown to Black
Non-Toxic		No Solvents
Shelf Life		6 months
Typical Cured Properties		
Tensile Strength	ASTM 412	32 psi
Elongation	ASTM 412	4.140%
Resistance to Decay	ASTM E 125 Section 13	4% Perm Loss
Accelerated Aging	ASTM G 23	No Effect
Moisture Vapor Transmission	ASTM E 96	0.088 g / ft^2 per hour
Hydraulic Water Pressure	ASTM D 751	26 psi
Perm Rating	ASTM E 96 (US Perms)	0.21
Methane Transmission Rate	ASTM D 1434	Passed
Adhesion to Concrete & Masonry	ASTM C 836 & ASTM C 704	11 lbf / inch
Hardness	ASTM C 836	80
Crack Bridging	ASTM C 836	No Cracking
Low Temp Flexibility	ASTM C 836-00	No Cracking at -20^0 C
Resistance to Acids		
Acetic		30%
Sulfuric and Hydrochloric		13%
Temperature Effect:		
Stable		248^0 F
Flexible		13^0 F
Packaging: 330 gal. totes or 55 gal. drums		

Approvals: City of Los Angeles RR# 25478, NSF

Land Science Technologies, Inc. / 1011 Calle Sombra / Suite 110 / San Clemente / CA / 92673
Ph. 949-366-8000 / F. 949- 366-8090

Land Science™ Technologies
www.landsciencetech.com

Product Data Sheet

Geo-Seal™ CORE DETAIL

Geo-Seal™ CORE DETAIL is ideally used to perform detailing and repairs to the Geo-Seal system. It is also ideal for those areas where the necessary clearance is not available for the application of the Geo-Seal spray. This proprietary and unique material can be used all at once or over a period of a few days without breaking down or hardening. Geo-Seal CORE DETAIL is water-based and can be applied to green concrete with exceptional bonding capability that will not delaminate from the intended substrate. Geo-Seal CORE DETAIL's viscosity allows high build applications to be done easily due to its ability to set quickly and get jobs done fast.

PROPERTIES	TEST METHOD	UNITS
TYPICAL UNCURED PROPERTIES		
Specific Gravity		1.034
Viscosity		9m-13m centipoise
PH		11.5
Flammability		270^0 F
Color		Brown to Black
Non-Toxic		No Solvents
Shelf Life		6 months
TYPICAL CURED PROPERTIES		
Initial Cure		30 minutes
Final Cure		24-24 hours
Tensile Strength	ASTM 412	32 psi
Elongation	ASTM 412	3.860%
Resistance to Decay	ASTM E 125 Section 13	9% Perm Loss
Accelerated Aging	ASTM G 23	No Effect
Moisture Vapor Transmission	ASTM E 96	0.088 gal/ft^2 per hour
Hydrostatic Water Pressure	ASTM D 751	28 psi
Perm Rating (US Perms)	ASTM E 96	0.17
Methane Transmission Rate	ASTM D 1434	0
Adhesion to Concrete & Masonry	ASTM C 836	7 lbf/inch
Hardness	ASTM C 836	85
Crack Bridging	ASTM C 836	No Cracking
Low Temp Flexibility	ASTM C 836-00	No Cracking at -20^0 C
Resistance to Acids		
Acetic		30%
Sulfuric and Hydrochloric		15%
COVERAGES		
60-mils (dry)		19 ft^2/gal
Packaging: Available in 1 or 5 gal. buckets		

Approvals: City of Los Angeles RR# 25478 (for methane and waterproofing), NSF Standard 61 for potable water containment

Land Science Technologies, Inc. / 1011 Calle Sombra / Suite 110 / San Clemente / CA / 92673
Ph. 949-366-8000 / F. 949- 366-8090

Land Science™ Technologies
www.landsciencetech.com

Product Data Sheet

Geo-Seal™ BASE Layer

The Geo-Seal™ BASE layer is comprised of a high strength laminated HDPE membrane that is thermally bonded to a polypropylene geotextile giving the BASE layer a high puncture resistance (Class A Rating) as well as high chemical resistance. The BASE layer is installed over the substrate with the HDPE side facing up and provides the ideal surface for the application of the Geo-Seal CORE component.

PROPERTIES	TEST METHOD	Geo-Seal BASE
Film Thickness		5 mil
Composite Thickness		18 mil
Tensile @ ULT	ASTM D 882 MD	37.3 lbs / in
	ASTM D 882 TD	32.0 lbs / in
Elongation @ ULT	ASTM D 882 MD	51.00%
	ASTM D 882 TD	55.30%
Dart Impact	ASTM D 1709	
	Method A	>1070 gms
	Method B	594 gms
Modulus	ASTM D 882 MD	295.5 lbs / in
	ASTM D 882 TD	270.6 lbs / in
Elmendorf Tear	ASTM D 1922 MD	5,260 gms
	ASTM D 1922 TD	5,140 gms
Puncture Prop. Tear	ASTM B 2582 MD	11,290 gms
	ASTM B 2582 TD	13,150 gms
Beach Puncture Tear	ASTM D 751 MD	160 lb / in
	ASTM D 751 TD	165 lb / in
Permeability (water vapor)	ASTM E96	0.214
Chemical Resistance		Excellent
Packaging: 15'x150' = 100 lbs		

Land Science Technologies, Inc. / 1011 Calle Sombra / Suite 110 / San Clemente / CA / 92673
Ph. 949-366-8000 / F. 949- 366-8090

Land Science™ Technologies
www.landsciencetech.com

Product Data Sheet

Geo-Seal™ BOND Layer

The Geo-Seal™ BOND layer is comprised of a high strength laminated HDPE membrane that is thermally bonded to a polypropylene geotextile giving the BASE layer a high puncture resistance (Class A Rating) as well as high chemical resistance. The BOND layer is installed as a protection course over the BASE and CORE layers with the geotextile side facing up. The BOND layer also provides an excellent substrate and friction surface for concrete to adhere to.

PROPERTIES	TEST METHOD	Geo-Seal BOND
Film Thickness		5 mil
Composite Thickness		18 mil
Tensile @ ULT	ASTM D 882 MD	37.3 lbs / in
	ASTM D 882 TD	32.0 lbs / in
Elongation @ ULT	ASTM D 882 MD	51.00%
	ASTM D 882 TD	55.30%
Dart Impact	ASTM D 1709	
	Method A	>1070 gms
	Method B	594 gms
Modulus	ASTM D 882 MD	295.5 lbs / in
	ASTM D 882 TD	270.6 lbs / in
Elmendorf Tear	ASTM D 1922 MD	5,260 gms
	ASTM D 1922 TD	5,140 gms
Puncture Prop. Tear	ASTM B 2582 MD	11,290 gms
	ASTM B 2582 TD	13,150 gms
Beach Puncture Tear	ASTM D 751 MD	160 lb / in
	ASTM D 751 TD	165 lb / in
Permeability (water vapor)	ASTM E96	0.214
Chemical Resistance		Excellent
Packaging: 15'x150' = 100 lbs		

Land Science Technologies, Inc. / 1011 Calle Sombra / Suite 110 / San Clemente / CA / 92673
Ph. 949-366-8000 / F. 949- 366-8090

Land Science™ Technologies
www.landsciencetech.com

Product Data Sheet

Geo-Seal™ Reinforcement Fabric

The Geo-Seal™ Reinforcement Fabric is a textile material composed of staple fibers hydraulically entangled, which is composed of 100% polyester. The basic use of the Geo-Seal Reinforcement Fabric is designed to act as reinforcement when used in conjunction with Geo-Seal CORE spray applied membrane.

CHEMICAL	EXPOSURE (at room temperature)	% STRENGTHENED RETAINED
Dimethyl Formamide	1000 hours	100%
Ethylene Glycol	1000 hours	100%
1% Sodium Hydroxide	6 hours	100%
60% Sulfuric Acid	150 hours	54%
Perchlorethylene	1000 hours	100%
Acetone	1000 hours	100%
Distilled Water	1000 hours	100%
PHYSICAL PROPERTY DATA		
Weight/Square (lbs.)	ASTM D 3776	1.1
Oz./Sq./Yd. (oz.)	ASTM D 3776	1.6
Bulk (mills)		22
Dry Tensile-MD (lbs.)	ASTM D1777	25
Dry Tensile-CD (lbs.)	ASTM D 1777	18
Elongation-MD (per/cent)	ASTM D 1682	45
Elongation-CD (per/cent)	ASTM D 1682	100
Mullen Burst (P. S. I.)	ASTM D 3786	35
Packaging: 6” x 360’, 12” x 360’		

Land Science Technologies, Inc. / 1011 Calle Sombra / Suite 110 / San Clemente / CA / 92673
Ph. 949-366-8000 / F. 949- 366-8090

Geo-Seal® Vapor Intrusion Barrier
02 56 19.13
Fluid-Applied Gas Barrier
Version 1.4

Note: If membrane will be subjected to hydrostatic pressure, please contact Land Science Technologies™ for proper recommendations.

PART 1 – GENERAL

1.1 RELATED DOCUMENTS

A. Drawings and general provisions of the contract, including general and supplementary conditions and Division 1 specification sections, apply to this section.

1.2 SUMMARY

A. This section includes the following:

1. Substrate preparation:
2. Vapor intrusion barrier components:
3. Seam sealer and accessories.

B. Related Sections: The following sections contain requirements that relate to this section:

1. Division 2 Section “Earthwork”, “Pipe Materials”, “Sub-drainage Systems”, “Gas Collection Systems”:
2. Division 3 Section “Cast-in-Place Concrete” for concrete placement, curing, and finishing:
3. Division 5 Section “Expansion Joint Cover Assemblies”, for expansion-joint covers assemblies and installation.

1.3 PERFORMANCE REQUIREMENTS

A. General: Provide a vapor intrusion barrier system that prevents the passage of methane gas and/or volatile organic compound vapors and complies with physical requirements as demonstrated by testing performed by an independent testing agency of manufacturer’s current vapor intrusion barrier formulations and system design.

1.4 SUBMITTALS

A. Submit product data for each type of vapor intrusion barrier, including manufacturer’s printed instructions for evaluating and preparing the substrate, technical data, and tested physical and performance properties.

B. Project Data - Submit shop drawings showing extent of vapor intrusion barrier, including details for overlaps, flashing, penetrations, and other termination conditions.

C. Samples – Submit representative samples of the following for approval:

1. Vapor intrusion barrier components.

D. Certified Installer Certificates – Submit certificates signed by manufacturer certifying that installers comply with requirements under the “Quality Assurance” article.

1.5 QUALITY ASSURANCE

A. Installer Qualifications: Engage an experienced installer who has been trained and certified in writing by the membrane manufacturer, Land Science Technologies™ for the installation of the Geo-Seal® System.

B. Manufacturer Qualification: Obtain vapor intrusion barrier materials and system components from a single manufacturer source Land Science Technologies.

C. Field Sample: Apply vapor intrusion barrier system field sample to 100 ft^2 (9.3 m^2) of field area demonstrate application, detailing, thickness, texture, and standard of workmanship.

1. Notify engineer or special inspector one week in advance of the dates and times when field sample will be prepared.

2. If engineer or special inspector determines that field sample, does not meet requirements, reapply field sample until field sample is approved.

3. Retain and maintain approved field sample during construction in an undisturbed condition as a standard for judging the completed methane and vapor intrusion barrier. An undamaged field sample may become part of the completed work.

D. Pre-installation Conference: A pre-installation conference shall be held prior to application of the vapor intrusion barrier system to assure proper site and installation conditions, to include contractor, applicator, architect/engineer, other trades influenced by vapor intrusion barrier installation and special inspector (if any).

© 2012 Land Science Technologies

1.6 DELIVERY, STORAGE, AND HANDLING

A. Deliver materials to project site as specified by manufacturer labeled with manufacturer's name, product brand name and type, date of manufacture, shelf life, and directions for storing and mixing with other components.

B. Store materials as specified by the manufacturer in a clean, dry, protected location and within the temperature range required by manufacturer. Protect stored materials from direct sunlight. If freezing temperatures are expected, necessary steps should be taken to prevent the freezing of the Geo-Seal CORE and Geo-Seal CORE Detail components.

C. Remove and replace material that cannot be applied within its stated shelf life.

1.7 PROJECT CONDITIONS

A. Protect all adjacent areas not to be installed on. Where necessary, apply masking to prevent staining of surfaces to remain exposed wherever membrane abuts to other finish surfaces.

B. Perform work only when existing and forecasted weather conditions are within manufacturer's recommendations for the material and application method used.

C. Minimum clearance of 24 inches is required for application of product. For areas with less than 24-inch clearance, the membrane may be applied by hand using Geo-Seal CORE Detail.

D. Ambient temperature shall be within manufacturer's specifications. (Greater than +45ºF/+7ºC.) Consult manufacturer for the proper requirements when desiring to apply Geo-Seal CORE below 45ºF/7ºC.

E. All plumbing, electrical, mechanical and structural items to be under or passing through the vapor intrusion barrier system shall be positively secured in their proper positions and appropriately protected prior to membrane application.

F. Vapor intrusion barrier shall be installed before placement of fill material and reinforcing steel. When not possible, all exposed reinforcing steel shall be masked by general contractor prior to membrane application.

G. Stakes used to secure the concrete forms **shall not penetrate** the vapor intrusion barrier system after it has been installed. If stakes need to puncture the vapor intrusion barrier system after it has been installed, the necessary repairs need to be made by a certified Geo-Seal applicator. To confirm the staking procedure is in agreement with the manufactures recommendation, contact Land Science Technologies.

1.8 WARRANTY

A. General Warranty: The special warranty specified in this article shall not deprive the owner of other rights the owner may have under other provisions of the contract documents, and shall be in addition to, and run concurrent with, other warranties made by the contractor under requirements of the contract documents.

B. Special Warranty: Submit a written warranty signed by vapor intrusion barrier manufacturer agreeing to repair or replace vapor intrusion barrier that does not meet requirements or that does not remain methane gas and/or volatile organic compound vapor tight within the specified warranty period. Warranty does not include failure of vapor intrusion barrier due to failure of substrate prepared and treated according to requirements or formation of new joints and cracks in the attached to structures that exceed 1/16 inch (1.58 mm) in width.

1. Warranty Period: 1 year after date of substantial completion.

C. Additional warranties are available upon request to the manufacturer.

PART 2 – PRODUCTS

2.1 MANUFACTURERS

A. Geo-Seal; Land Science Technologies™, San Clemente, CA. (949) 481-8118

1. Geo-Seal BASE sheet layer
2. Geo-Seal CORE spray layer and Geo-Seal CORE Detail
3. Geo-Seal BOND protection layer

2.2 VAPOR INTRUSION BARRIER SPRAY MATERIALS

A. Fluid applied vapor intrusion barrier system – Geo-Seal CORE; a single course, high build, polymer modified, asphalt emulsion. Waterborne and spray applied at ambient temperatures. A nominal thickness of 60 dry mils, unless specified otherwise. Non-toxic and odorless. Geo-Seal CORE Detail has similar properties with greater viscosity and is roller or brush applied. Manufactured by Land Science Technologies.

© 2012 Land Science Technologies

B. Fluid applied vapor intrusion barrier physical properties.

Geo-Seal CORE – TYPICAL CURED PROPERTIES

Properties	Test Method	Results
Tensile Strength - CORE only	ASTM 412	32 psi
Tensile Strength - Geo-Seal System	ASTM 412	662 psi
Elongation	ASTM 412	4140%
Resistance to Decay	ASTM E 154 Section 13	4% Perm Loss
Accelerated Aging	ASTM G 23	No Effect
Moisture Vapor Transmission	ASTM E 96	.026 g/ft^2/hr
Hydrostatic Water Pressure	ASTM D 751	26 psi
Perm rating	ASTM E 96 (US Perms)	0.21
Methane transmission rate	ASTM D 1434	Passed
Adhesion to Concrete & Masonry	ASTM C 836 & ASTM C 704	11 lbf./inch
Hardness	ASTM C 836	80
Crack Bridging	ASTM C 836	No Cracking
Heat Aging	ASTM D 4068	Passed
Environmental Stress Cracking	ASTM D 1693	Passed
Oil Resistance	ASTM D543	Passed
Soil Burial	ASTM D 4068	Passed
Low Temp. Flexibility	ASTM C 836-00	No Cracking at –20°C
Resistance to Acids:		
Acetic		30%
Sulfuric and Hydrochloric		13%
Temperature Effect:		
Stable		248°F
Flexible		13°F

Geo-Seal CORE Detail – TYPICAL CURED PROPERTIES

Properties	Test Method	Results
Tensile Strength	ASTM 412	32 psi
Elongation	ASTM 412	3860%
Resistance to Decay	ASTM E 154 Section 13	9% Perm Loss
Accelerated Aging	ASTM G 23	No Effect
Moisture Vapor Transmission	ASTM E 96	.026 g/ft^2/hr
Hydrostatic Water Pressure	ASTM D 751	28 psi
Perm rating (US Perms)	ASTM E 96	0.17
Methane transmission rate	ASTM D 1434	Passed
Adhesion to Concrete & Masonry	ASTM C 836	7 lbf./inch
Hardness	ASTM C 836	85
Crack Bridging	ASTM C 836	No Cracking
Low Temp. Flexibility	ASTM C 836-00	No Cracking at –20ºC
Resistance to Acids:		
Acetic		30%
Sulfuric and Hydrochloric		13%
Temperature Effect:		
Stable		248°F
Flexible		13°F

2.3 VAPOR INTRUSION BARRIER SHEET MATERIALS

A. The Geo-Seal BASE layer and Geo-Seal BOND layer are chemically resistant sheets comprised of a 5 mil high density polyethylene sheet thermally bonded to a 3 ounce non woven geotextile.

B. Sheet Course Usage

1. As foundation base layer, use Geo-Seal BASE course and/or other base sheet as required or approved by the manufacturer.

2. As top protective layer, use Geo-Seal BOND layer and/or other protection as required or approved by the manufacturer.

C. Geo-Seal BOND and Geo-Seal BASE physical properties.

© 2012 Land Science Technologies

Properties	Test Method	Results
Film Thickness		5 mil
Composite Thickness		18 mil
Water Vapor Permeability	ASTM E 96	0.214
Adhesion to Concrete	ASTM D 1970	9.2 lbs/inch^2
Dart Impact	ASTM D 1790	>1070 gms, method A
		594 gms, method B
Puncture Properties Tear	ASTM B 2582 MD	11,290 gms
	ASTM B 2582 TD	13,150 gms

2.4 AXILLARY MATERIALS

A. Geo-Seal FILM-11 may be used in lieu of, or in addition to, the standard Geo-Seal BASE and Geo-Seal BOND material when project conditions require a higher level of chemical resistance or greater durability is required. Contact Land Science Technologies for the proper recommendation and approval.

Properties	Test Method	Results
Film Thickness		11 mil
Classification	ASTM E 1745-09	Exceed Class A,B and C
Tensile	ASTM E 154-93	45 lbs / in
Puncture Resistance	ASTM D 1709	2400 grams
Water Vapor Permeance	ASTM E 96	0.020 Perms
Life Expectancy	ASTM E 154-93	Indefinite
Chemical Resistance	ASTM E 154-93	Excellent

B. Sheet Flashing: 60-mil reinforced modified asphalt sheet good with double-sided adhesive.

C. Reinforcing Strip: Manufacturer's recommended polypropylene and polyester fabric.

D. Gas Venting Materials: Geo-Seal Vapor-Vent or Geo-Seal Vapor-Vent Poly, and associated fittings.

E. Seam Detailing Sealant Mastic: Geo-Seal CORE Detail, a high or medium viscosity polymer modified water based asphalt material.

1. Back Rod: Closed-cell polyethylene foam.

PART 3 – EXECUTION

3.1 AUXILIARY MATERIALS

A. Examine substrates, areas, and conditions under which vapor intrusion barrier will be applied, with installer present, for compliance with requirements. Do not proceed with installation until unsatisfactory conditions have been corrected.

3.2 SUBGRADE SURFACE PREPARATION

A. Verify substrate is prepared according to manufacturer's recommendations. On a horizontal surface, the substrate should be free from material that can potentially puncture the vapor intrusion barrier. Additional protection or cushion layers might be required if the earth or gravel substrate contains too many jagged points and edges that could puncture one or more of the system components. Contact manufacturer to confirm substrate is within manufactures recommendations.

B. Geo-Seal can accommodate a wide range of substrates, including but not limited to compacted earth, sand, aggregate, and mudslabs.

1. Compacted Earth: Remove pieces of debris, gravel and/or any other material that can potentially puncture the Geo-Seal BASE. Remove any debris from substrate that can potentially puncture the Geo-Seal system prior to application.

2. Sand: A sand subgrade requires no additional preparation, provided any material that can potentially puncture the Geo-Seal BASE layer is not present.

3. Aggregate: Contact the manufacturer to ensure the aggregate layer will not be detrimental to the membrane. **The gravel layer must be compacted and rolled flat.** Ideally a ¾" minus gravel layer with rounded edges should be specified; however the Geo-Seal system can accommodate a wide variety of different substrates. Contact Land Science Technologies if there are questions regarding the compatibility of Geo-Seal and the utilized substrate. Exercise caution when specifying pea gravel under the membrane, if not compacted properly, pea gravel can become an unstable substrate.

4. Mudslabs: The use of a mubslab under the Geo-Seal system is acceptable, contact Land Science Technologies for job specific requirements.

C. Mask off adjoining surface not receiving the vapor intrusion barrier system to prevent the spillage or over spray affecting other construction.

© 2012 Land Science Technologies

D. Earth, sand or gravel subgrades should be prepared and compacted to local building code requirements.

3.3 CONCRETE SURFACE PREPARATION

A. Clean and prepare concrete surface to manufacturer's recommendations. In general, only apply the Geo-Seal CORE material to dry, clean and uniform substrates. Concrete surfaces must be a light trowel, light broom or equivalent finish. Remove fins, ridges and other projections and fill honeycomb, aggregate pockets, grout joints and tie holes, and other voids with hydraulic cement or rapid-set grout. It is the applicator's responsibility to point out unacceptable substrate conditions to the general contractor and ensure the proper repairs are made.

B. When applying the Geo-Seal CORE or Geo-Seal CORE Detail material to concrete it is important to not apply the product over standing water. Applying over standing water will result in the membrane not setting up properly on the substrate

C. Surfaces may need to be wiped down or cleaned prior to application. This includes, but is not limited to, the removal of forming oils, concrete curing agents, dirt accumulation, and other debris. Contact form release agent manufacturer or concrete curing agent manufacturer for VOC content and proper methods for removing the respective agent.

D. Applying the Geo-Seal CORE to "green" concrete is acceptable and can be advantageous in creating a superior bond to the concrete surface. To help reduce blistering, apply a primer coat of only the asphalt component of the Geo-Seal CORE system. Some blistering of the membrane will occur and may be more severe on walls exposed to direct sunlight. Blistering is normal and will subside over time. Using a needle nose depth gauge confirm that the specified mil thickness has been applied.

3.4 PREPARATIONS AND TREATMENT OF TERMINATIONS

A. Prepare the substrate surface in accordance with Section 3.3 of this document. Concrete surfaces that are not a light trowel, light broom or equivalent finish, will need to be repaired.

B. Terminations on horizontal and vertical surfaces should extend 6" onto the termination surface. Job specific conditions may prevent a 6" termination. In these conditions, contact manufacturer for recommendations.

C. Apply 30 mils of Geo-Seal CORE to the terminating surface and then embed the Geo-Seal BASE layer by pressing it firmly into the Geo-Seal CORE layer. Next, apply 60 mils of Geo-Seal CORE to the BASE layer. When complete, apply the Geo-Seal BOND layer. After the placement of the Geo-Seal BOND layer is complete, apply a final 30 mil seal of the Geo-Seal CORE layer over the edge of the termination. For further clarification, refer to the termination detail provided by manufacturer.

D. The stated termination process is appropriate for terminating the membrane onto exterior footings, pile caps, interior footings and grade beams. When terminating the membrane to stem walls or vertical surfaces the same process should be used.

3.5 PREPARATIONS AND TREATMENT OF PENETRATIONS

A. All pipe penetrations should be securely in place prior to the installation of the Geo-Seal system. Any loose penetrations should be secured prior to Geo-Seal application, as loose penetrations could potentially exert pressure on the membrane and damage the membrane after installation.

B. To properly seal around penetrations, cut a piece of the Geo-Seal BASE layer that will extend 6" beyond the outside perimeter of the penetration. Cut a hole in the Geo-Seal BASE layer just big enough to slide over the penetration, ensuring the Geo-Seal BASE layer fits snug against the penetration, this can be done by cutting an "X" no larger than the inside diameter of the penetration. There should not be a gap larger than a 1/8" between the Geo-Seal BASE layer and the penetration. Other methods can also be utilized, provided, there is not a gap larger than 1/8" between the Geo-Seal BASE layer and the penetration.

C. Seal the Geo-Seal BASE layer using Geo-Seal CORE or Geo-Seal CORE Detail to the underlying Geo-Seal BASE layer.

D. Apply one coat of Geo-Seal CORE Detail or Geo-Seal CORE spray to the Geo-Seal BASE layer and around the penetration at a thickness of 30 mils. Penetrations should be treated in a 6-inch radius around penetration and 3 inches onto penetrating object.

E. Embed a fabric reinforcing strip after the first application of the Geo-Seal CORE spray or Geo-Seal CORE Detail material and then apply a second 30 mil coat over the embedded joint reinforcing strip ensuring its complete saturation of the embedded strip and tight seal around the penetration.

F. After the placement of the Geo-Seal BOND layer, a cable tie should then be placed around the finished penetration. The cable tie should be snug, but not overly tight so as to slice into the finished seal.

OPTION: A final application of Geo-Seal CORE may be used to provide a finishing seal after the Geo-Seal BOND layer has been installed.

NOTE: Metal or other slick penetration surfaces may require treatment in order to achieve proper adhesion. For plastic pipes, sand paper may be used to achieve a profile, an emery cloth is more appropriate for metal surfaces. An emery cloth should also be used to remove any rust on metal surfaces.

3.6 GEO-SEAL BASE LAYER INSTALLATION

© 2012 Land Science Technologies

A. Install the Geo-Seal BASE layer over substrate material in one direction with six-inch overlaps and the geotextile (fabric side) facing down.

B. Secure the Geo-Seal BASE seams by applying 60 mils of Geo-Seal CORE between the 6” overlapped sheets with the geotextile side down.

C. Visually verify there are no gaps/fish-mouths in seams.

D. For best results, install an equal amount of Geo-Seal BASE and Geo-Seal CORE in one day. Leaving unsprayed Geo-Seal BASE overnight might allow excess moisture to collect on the Geo-Seal BASE. If excess moisture collects, it needs to be removed.

NOTE: In windy conditions it might be necessary to encapsulate the seam by spraying the Geo-Seal CORE layer over the completed Geo-Seal BASE seam.

3.7 GEO-SEAL CORE APPLICATION

A. Set up spray equipment according to manufacturer’s instructions.

B. Mix and prepare materials according to manufacturer’s instructions.

C. The two catalyst nozzles (8001) should be adjusted to cross at about 18" from the end of the wand. This apex of catalyst and emulsion spray should then be less than 24" but greater than 12” from the desired surface when spraying. When properly sprayed the fan pattern of the catalyst should range between 65° and 80°.

D. Adjust the amount of catalyst used based on the ambient air temperature and surface temperature of the substrate receiving the membrane. In hot weather use less catalyst as hot conditions will quickly “break” the emulsion and facilitate the curing of the membrane. In cold conditions and on vertical surfaces use more catalyst to “break” the emulsion quicker to expedite curing and set up time in cold conditions.

E. To spray the Geo-Seal CORE layer, pull the trigger on the gun. A 42° fan pattern should form when properly sprayed. Apply one spray coat of Geo-Seal CORE to obtain a seamless membrane free from pinholes or shadows, with an average dry film thickness of 60 mils (1.52 mm).

F. Apply the Geo-Seal CORE layer in a spray pattern that is perpendicular to the application surface. The concern when spraying at an angle is that an area might be missed. Using a perpendicular spray pattern will limit voids and thin spots, and will also create a uniform and consistent membrane.

G. Verify film thickness of vapor intrusion barrier every 500 ft^2. (46.45 m^2), for information regarding Geo-Seal quality control measures, refer to the quality control procedures in Section 3.9 of this specification.

H. The membrane will generally cure in 24 to 48 hours. As a rule, when temperature decreases or humidity increases, the curing of the membrane will be prolonged. The membrane does not need to be fully cured prior the placement of the Geo-Seal BOND layer, provided mil thickness has been verified and a smoke test will be conducted.

I. **Do not penetrate** membrane after it has been installed. If membrane is penetrated after the membrane is installed, it is the responsibility of the general contractor to notify the certified installer to make repairs.

J. If applying to a vertical concrete wall, apply Geo-Seal CORE directly to concrete surface and use manufacturer’s recommended protection material based on site specific conditions. If applying Geo-Seal against shoring, contact manufacturer for site specific installation instructions.

NOTE: Care should be taken to not trap moisture between the layers of the membrane. Trapping moisture may occur from applying a second coat prior to the membrane curing. Repairs and detailing may be done over the Geo-Seal CORE layer when not fully cured.

3.8 GEO-SEAL BOND PROTECTION COURSE INSTALLATION

A. Install Geo-Seal BOND protection course perpendicular to the direction of the Geo-Seal BASE course with overlapped seams over nominally cured membrane no later than recommended by manufacturer and before starting subsequent construction operations.

B. Sweep off any water that has collected on the surface of the Geo-Seal CORE layer, prior to the placement of the Geo-Seal BOND layer.

C. Overlap and seam the Geo-Seal BOND layer in the same manner as the Geo-Seal BASE layer.

D. To expedite the construction process, the Geo-Seal BOND layer can be placed over the Geo-Seal CORE immediately after the spray application is complete, provided the Geo-Seal CORE mil thickness has been verified.

3.9 QUALITY ASSURANCE

A. The Geo-Seal system must be installed by a trained and certified installer approved by Land Science Technologies.

© 2012 Land Science Technologies

B. For projects that will require a material or labor material warranty, Land Science Technologies will require a manufacturer's representative or certified 3rd party inspector to inspect and verify that the membrane has been installed per the manufacturer's recommendations.

The certified installer is responsible for contacting the inspector for inspection. Prior to application of the membrane, a notice period for inspection should be agreed upon between the applicator and inspector.

C. The measurement tools listed below will help verity the thickness of the Geo-Seal CORE layer. As measurement verification experience is gained, these tools will help confirm thickness measurements that can be obtained by pressing one's fingers into the Geo-Seal CORE membrane.

To verify the mil thickness of the Geo-Seal CORE, the following measurement devices are required.

1. Mil reading caliper: Calipers are used to measure the thickness of coupon samples. To measure coupon samples correctly, the thickness of the Geo-Seal sheet layers (18 mils each) must be taken into account. Mark sample area for repair.

2. Wet mil thickness gauge: A wet mil thickness gauge may be used to quickly measure the mil thickness of the Geo-Seal CORE layer. The thickness of the Geo-Seal sheet layers do not factor into the mil thickness reading.

   NOTE: When first using a wet mil thickness gauge on a project, collect coupon samples to verify the wet mil gauge thickness readings.

3. Needle nose digital depth gauge: A needle nose depth gauge should be used when measuring the Geo-Seal CORE thickness on vertical walls or in field measurements. Mark measurement area for repair.

To obtain a proper wet mil thickness reading, take into account the 5 to 10 percent shrinkage that will occur as the membrane fully cures. Not taking into account the thickness of the sheet layers, a freshly sprayed membrane should have a minimum wet thickness of 63 (5%) to 66 (10%) mils.

Methods on how to properly conduct Geo-Seal CORE thickness sampling can be obtained by reviewing literature prepared by Land Science Technologies.

D. It should be noted that taking too many destructive samples can be detrimental to the membrane. Areas where coupon samples have been removed need to be marked for repair.

E. Smoke Testing is highly recommended and is the ideal way to test the seal created around penetrations and terminations. Smoke Testing is conducted by pumping non-toxic smoke underneath the Geo-Seal vapor intrusion barrier and then repairing the areas where smoke appears. Refer to smoke testing protocol provided by Land Science Technologies. For projects that will require a material or labor material warranty, Land Science Technologies will require a smoke test.

F. Visual inspections prior to placement of concrete, but after the installation of concrete reinforcing, is recommended to identify any punctures that may have occurred during the installation of rebar, post tension cables, etc. Punctures in the Geo-Seal system should be easy to indentify due to the color contrasting layers of the system.

© 2012 Land Science Technologies

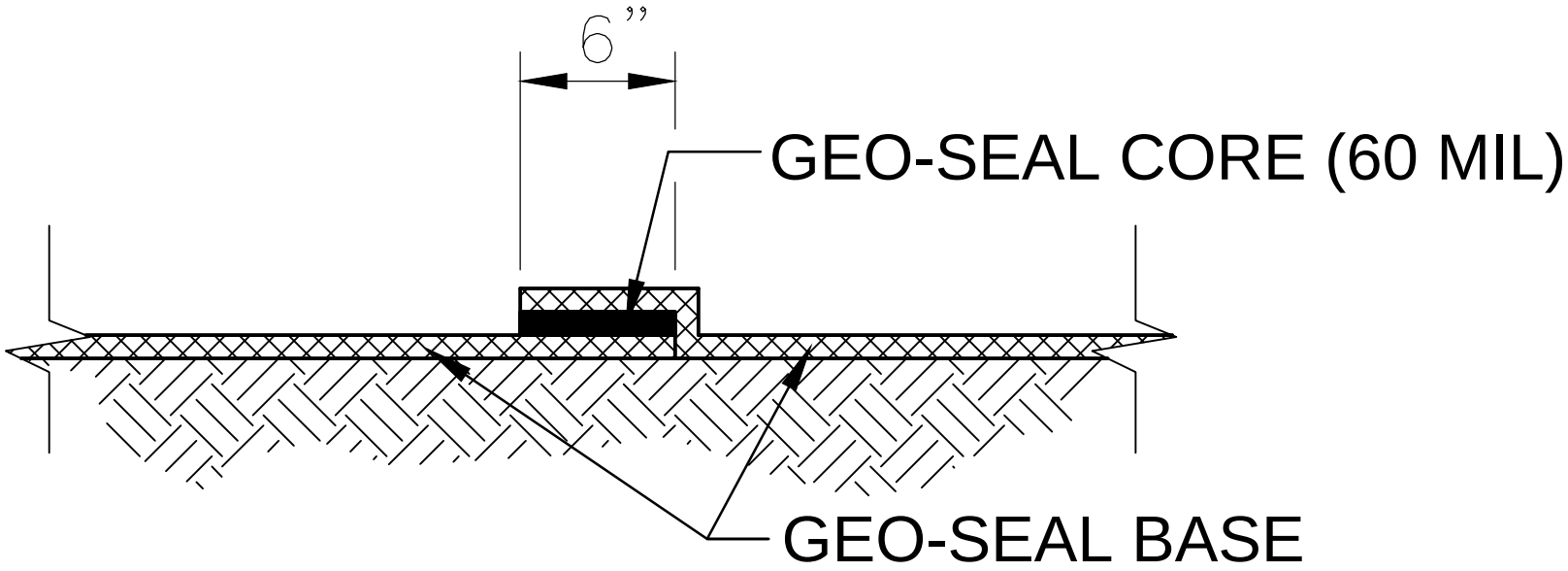

Land Science Technologies
1011 CALLE SOMBRA
SAN CLEMENTE, CA 92673
949.481.8188 OFFICE
WWW.LANDSCIENCETECH.COM
©2010 Land Science Technologies

Geo-Seal®
Vapor Intrusion Barrier

DATE

SCALE

TITLE

BASE OVERLAP DETAIL

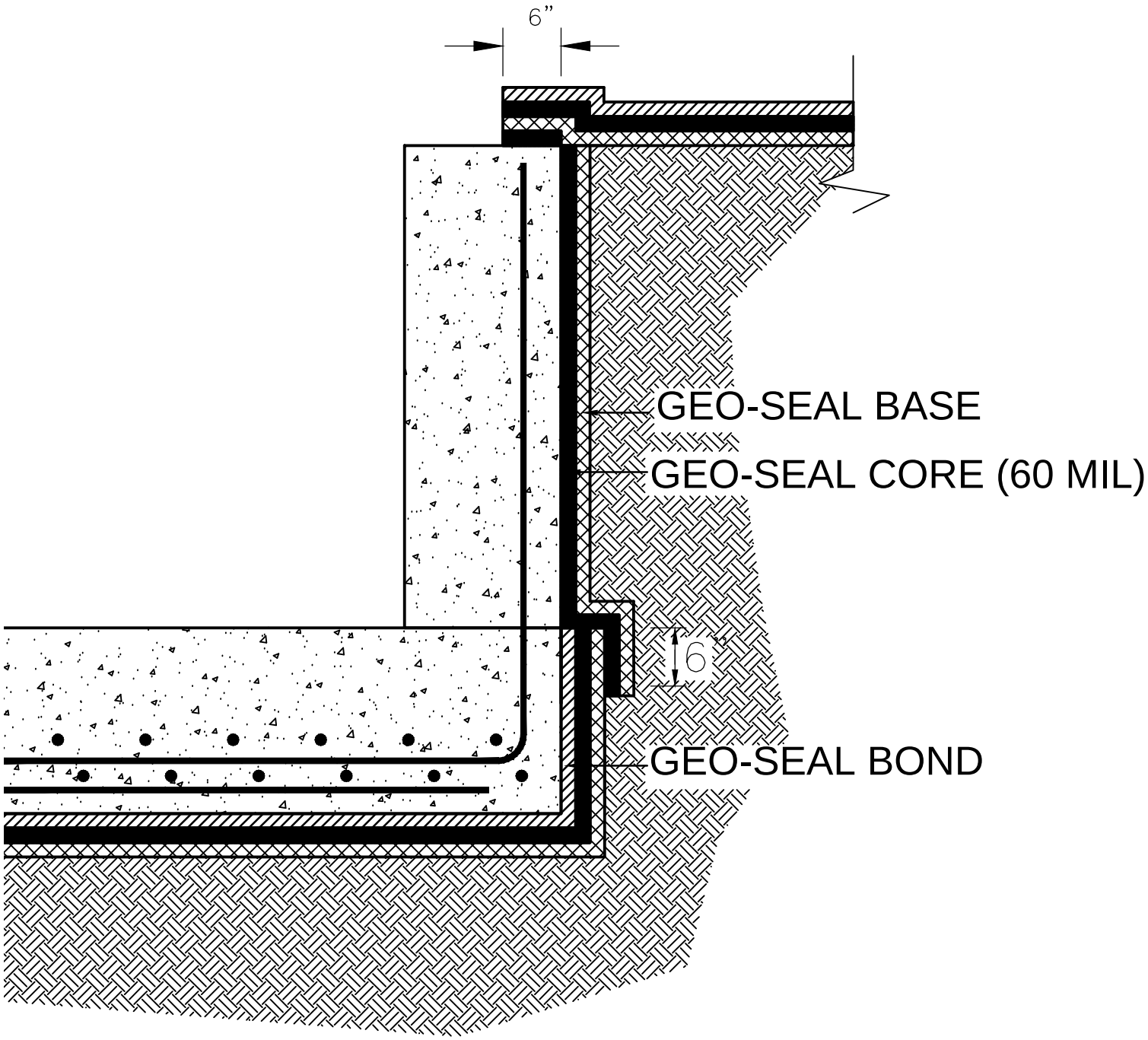

Land Science Technologies
1011 CALLE SOMBRA
SAN CLEMENTE, CA 92673
949.481.8188 OFFICE
WWW.LANDSCIENCETECH.COM
©2010 Land Science Technologies

Geo-Seal®
Vapor Intrusion Barrier

DATE

SCALE

TITLE

BELOW GRADE
OVERLAP DETAIL

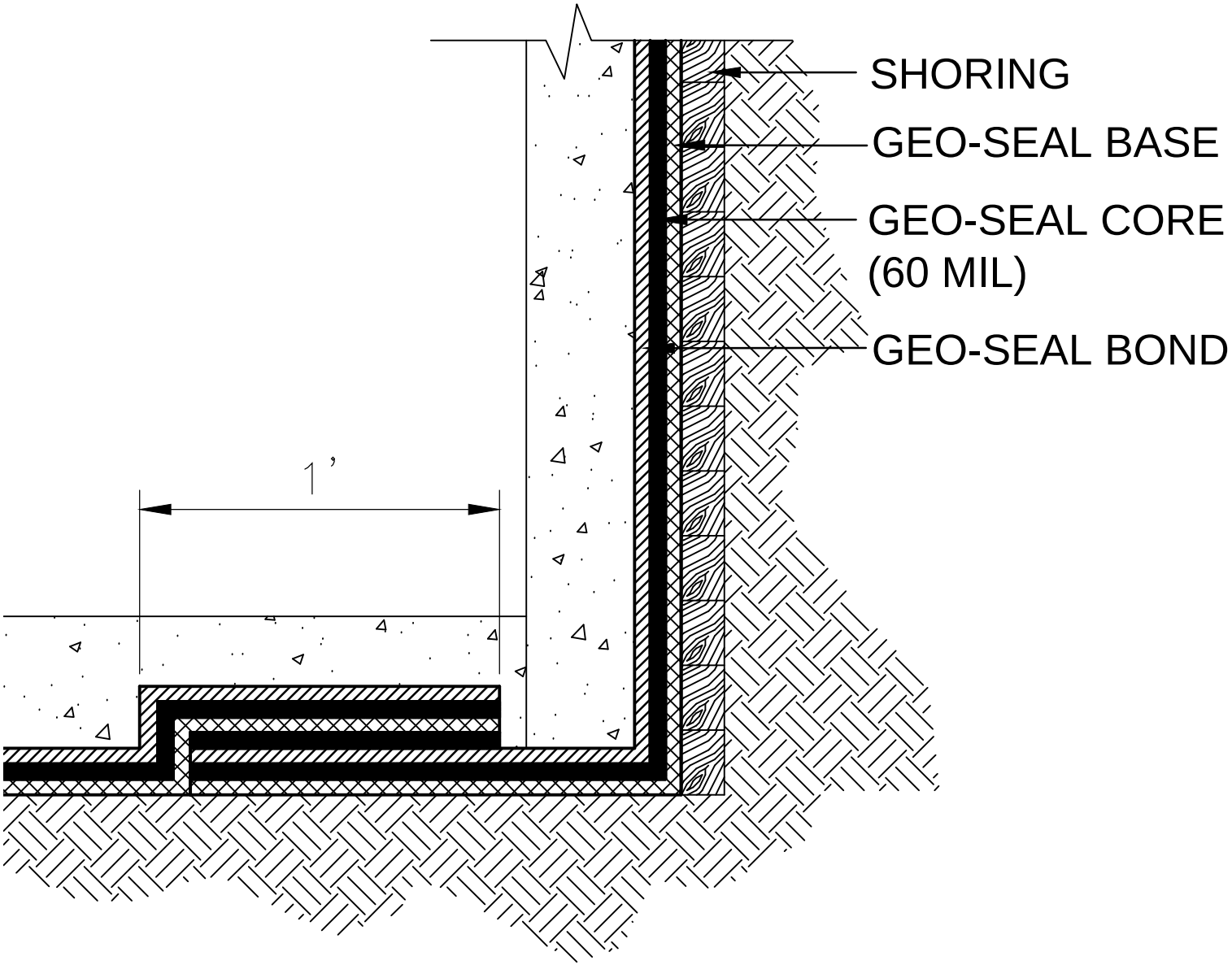

Land Science Technologies
1011 CALLE SOMBRA
SAN CLEMENTE, CA 92673
949.481.8188 OFFICE
WWW.LANDSCIENCETECH.COM
©2010 Land Science Technologies

Geo-Seal®
Vapor Intrusion Barrier

DATE

SCALE

TITLE

BELOW GRADE
SHORING DETAIL

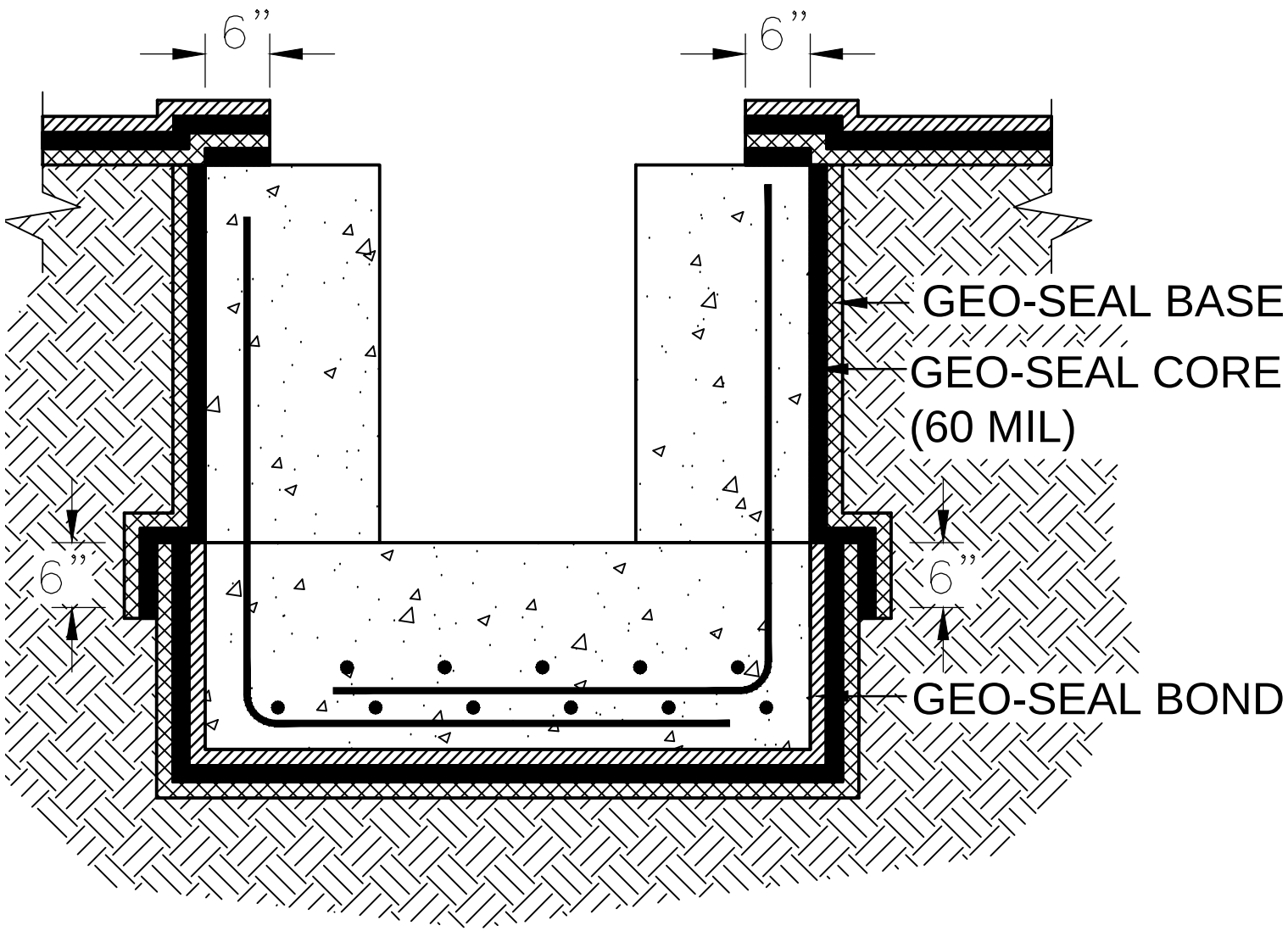

Land Science Technologies
1011 CALLE SOMBRA
SAN CLEMENTE, CA 92673
949.481.8188 OFFICE
WWW.LANDSCIENCETECH.COM
©2010 Land Science Technologies

Geo-Seal®
Vapor Intrusion Barrier

DATE

SCALE

TITLE

ELEVATOR PIT
DETAIL

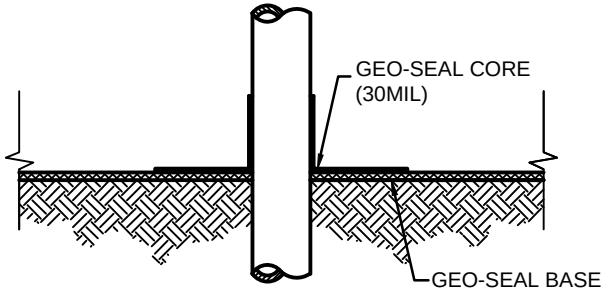

STEP 1

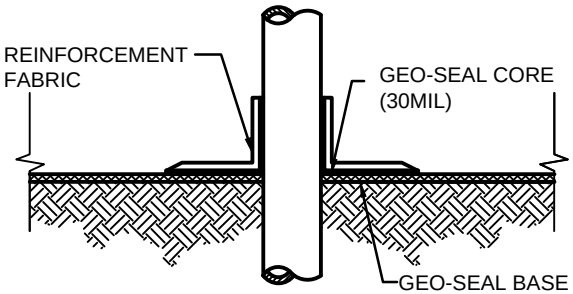

STEP 2

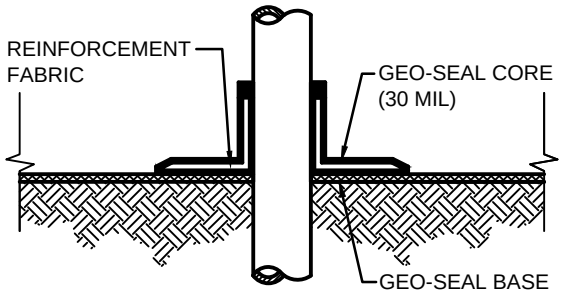

STEP 3

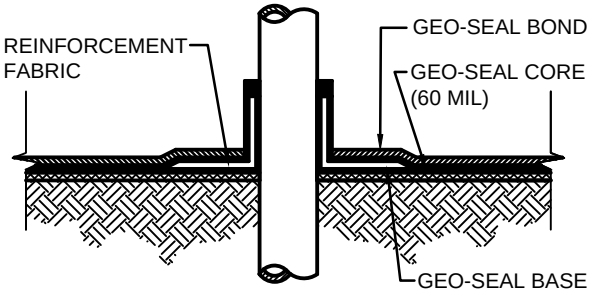

STEP 4

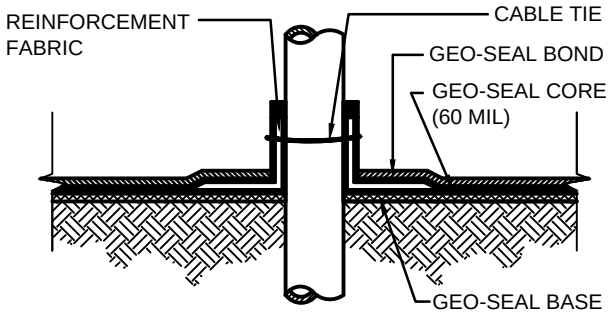

STEP 5

Land Science Technologies
1011 CALLE SOMBRA
SAN CLEMENTE, CA 92673
949.481.8188 OFFICE
WWW.LANDSCIENCETECH.COM
©2010 Land Science Technologies

Geo-Seal®
Vapor Intrusion Barrier

DATE

SCALE

TITLE

PENETRATION SEQUENCE

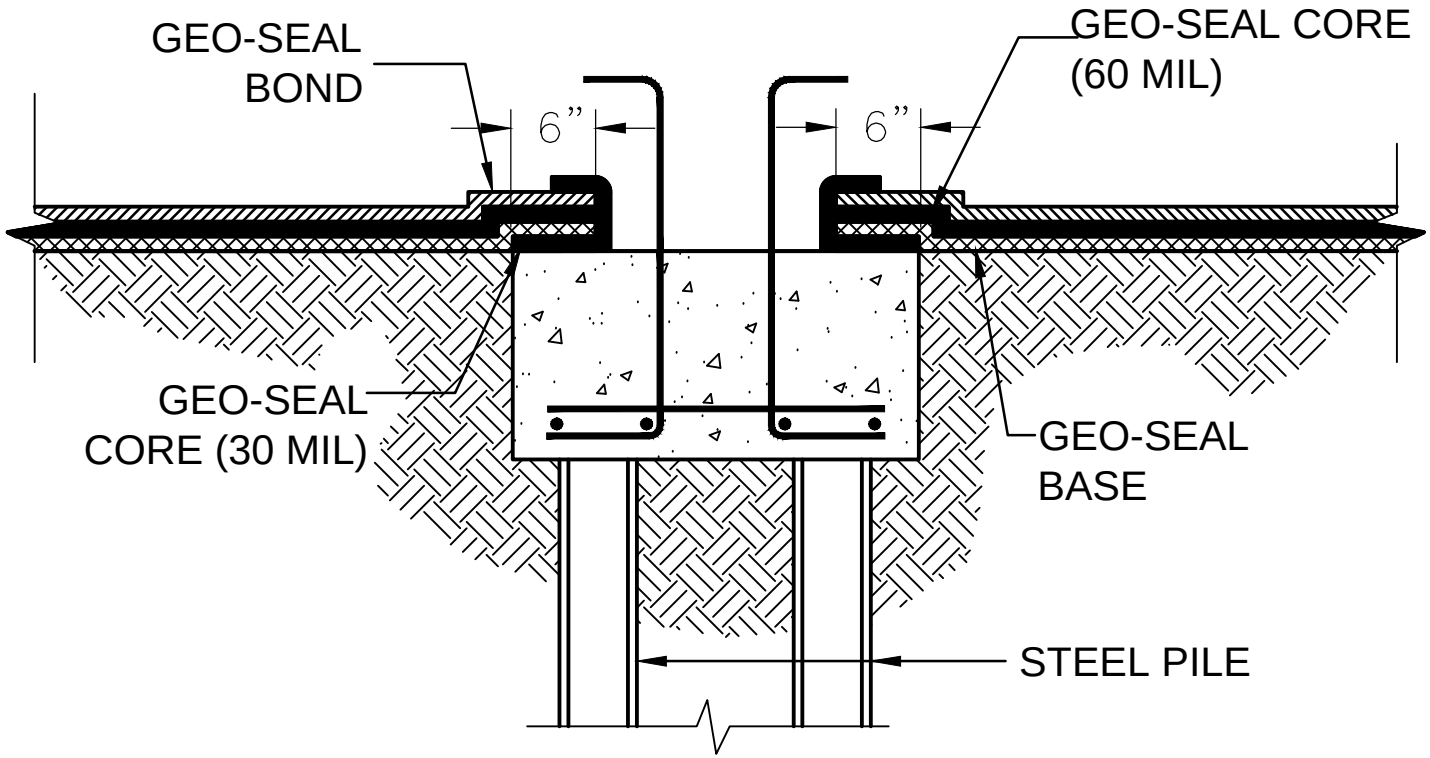

Land Science Technologies
1011 CALLE SOMBRA
SAN CLEMENTE, CA 92673
949.481.8188 OFFICE
WWW.LANDSCIENCETECH.COM
©2010 Land Science Technologies

Geo-Seal®
Vapor Intrusion Barrier

DATE

SCALE

TITLE

PILE CAP DETAIL

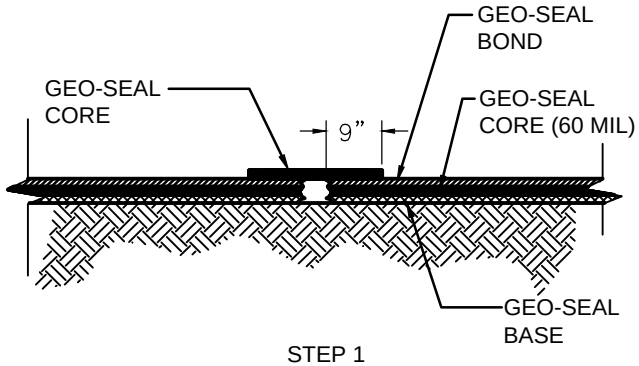

STEP 1

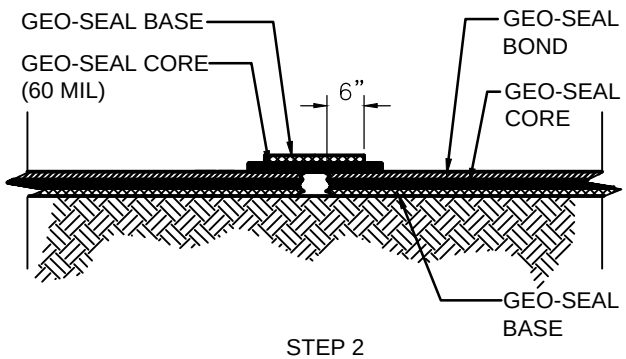

STEP 2

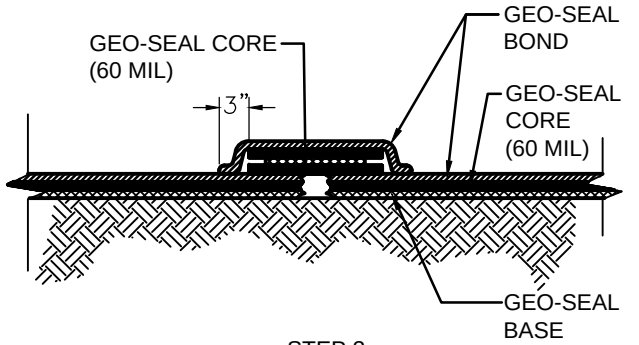

STEP 3

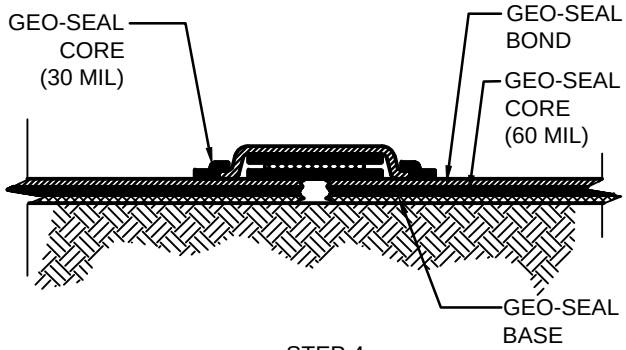

STEP 4

Land Science Technologies
1011 CALLE SOMBRA
SAN CLEMENTE, CA 92673
949.481.8188 OFFICE
WWW.LANDSCIENCETECH.COM
©2010 Land Science Technologies

Geo-Seal®
Vapor Intrusion Barrier

DATE

SCALE

TITLE

REPAIR
SEQUENCE

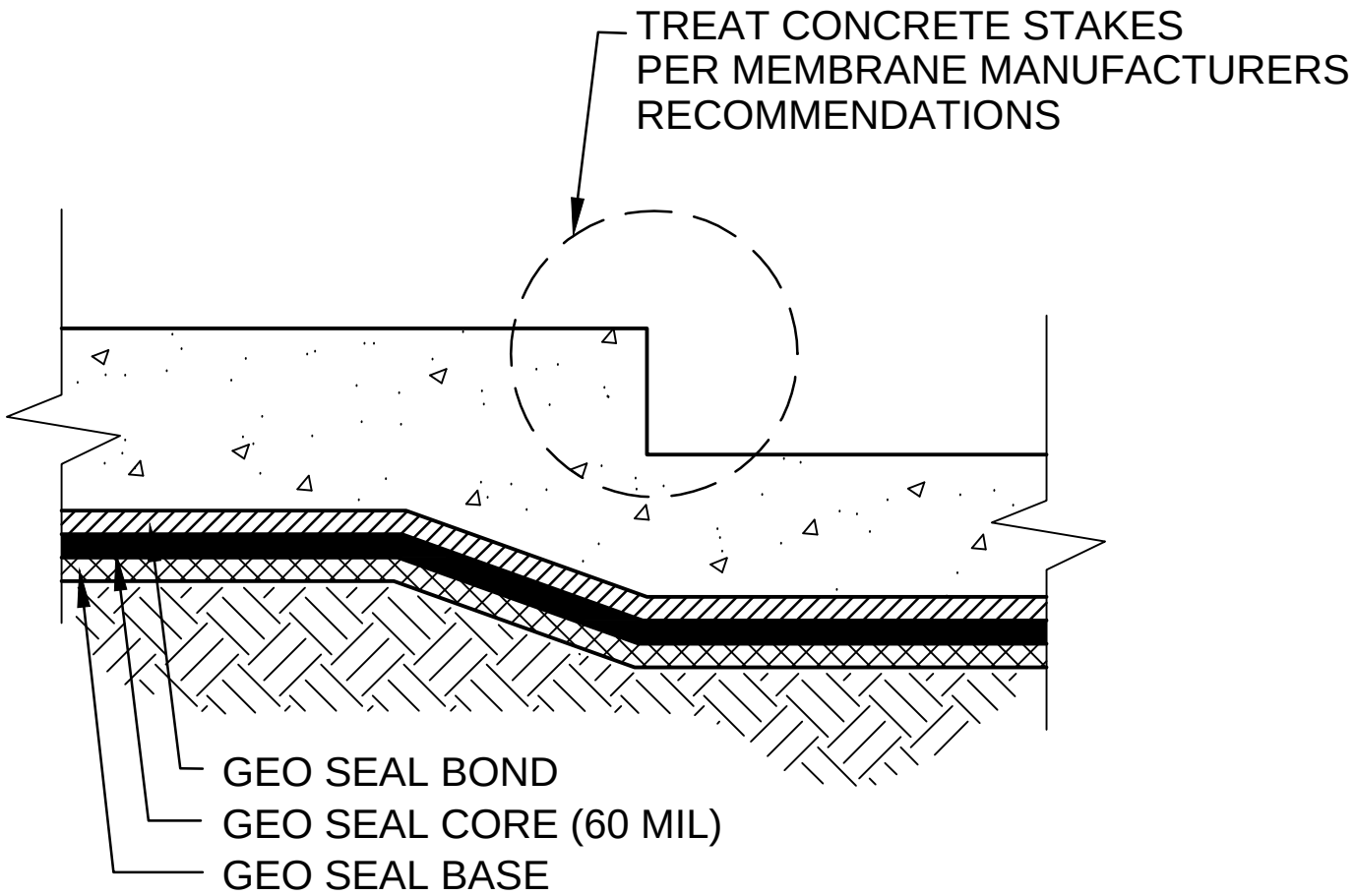

Land Science Technologies
1011 CALLE SOMBRA
SAN CLEMENTE, CA 92673
949.481.8188 OFFICE
WWW.LANDSCIENCETECH.COM
©2010 Land Science Technologies

Geo-Seal®
Vapor Intrusion Barrier

DATE

SCALE

TITLE

STEP SLAB
DETAIL

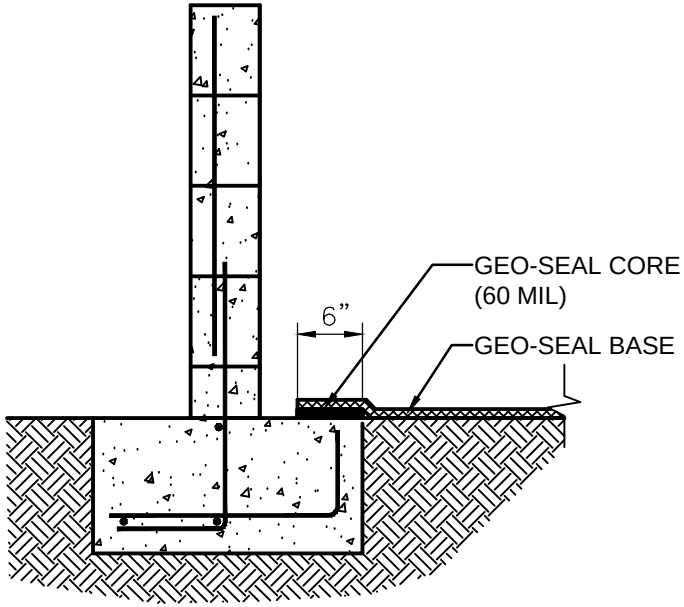

STEP 1

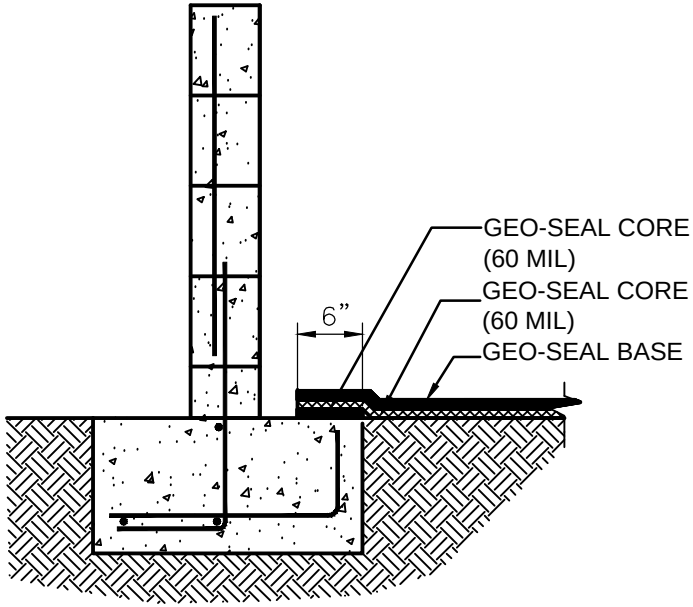

STEP 2

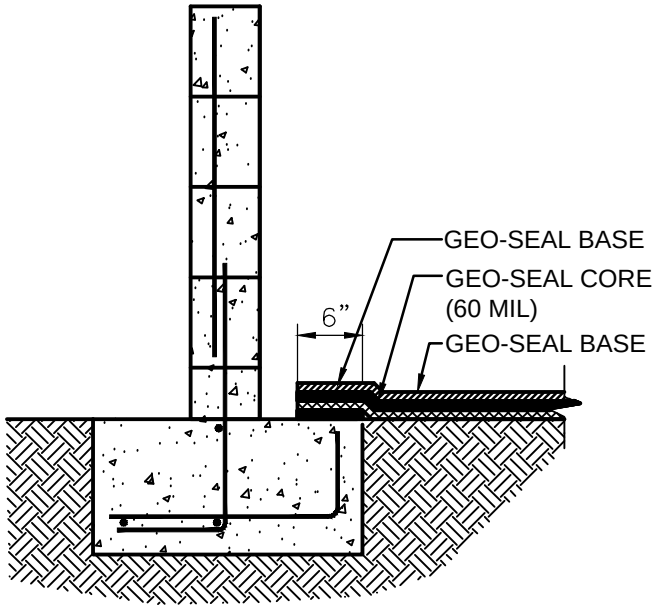

STEP 3

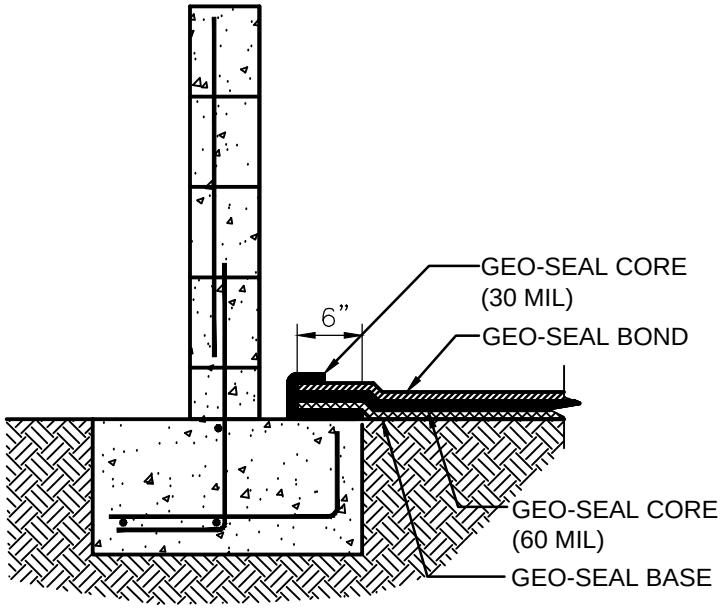

STEP 4

Land Science Technologies
1011 CALLE SOMBRA
SAN CLEMENTE, CA 92673
949.481.8188 OFFICE
WWW.LANDSCIENCETECH.COM
©2010 Land Science Technologies

Geo-Seal®
Vapor Intrusion Barrier

DATE

SCALE

TITLE

TERMINATION SEQUENCE

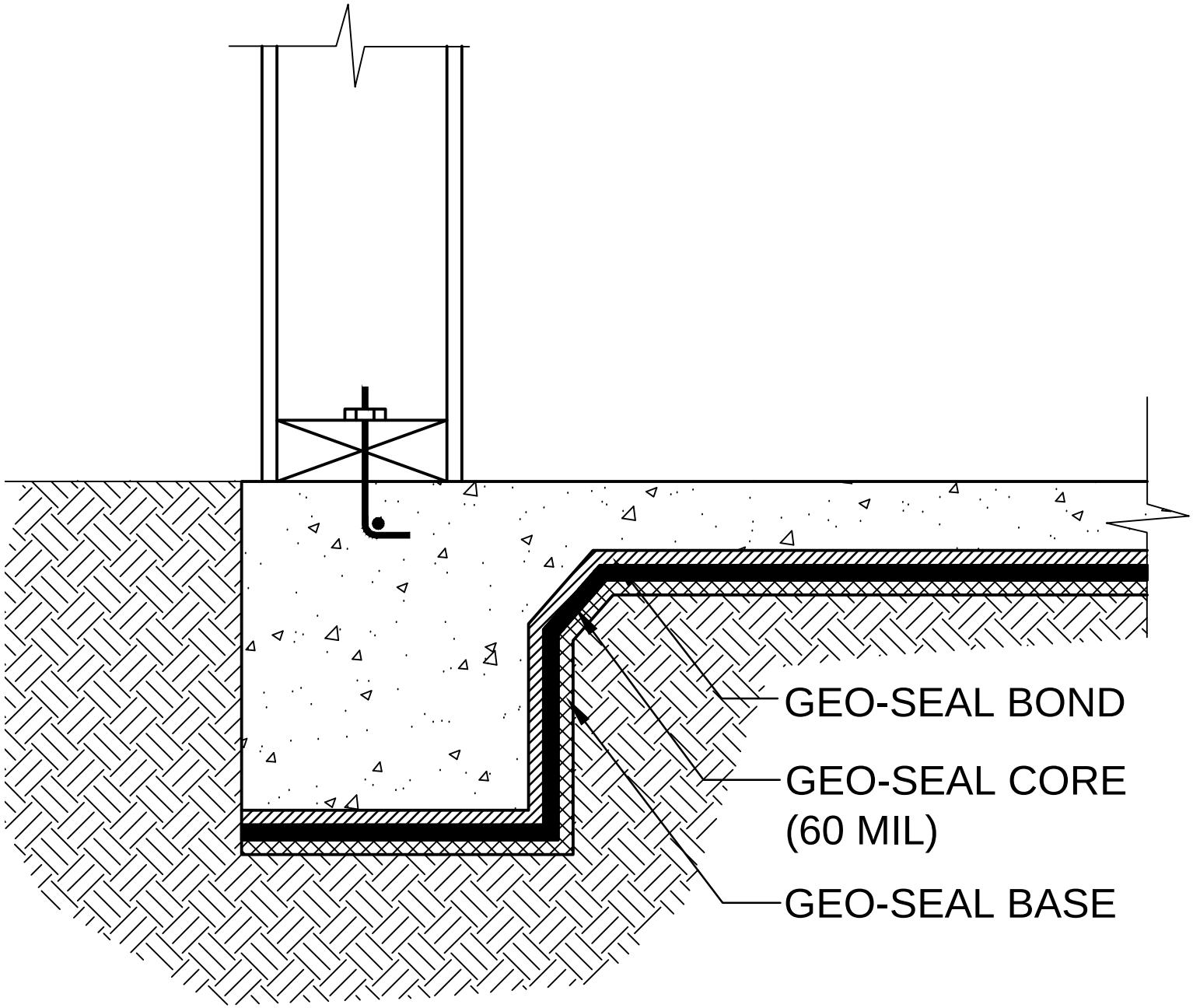

Land Science Technologies
1011 CALLE SOMBRA
SAN CLEMENTE, CA 92673
949.481.8188 OFFICE
WWW.LANDSCIENCETECH.COM
©2010 Land Science Technologies

Geo-Seal®
Vapor Intrusion Barrier

DATE

SCALE

TITLE

UNDER FOOTING DETAIL

Geo-Seal Quality Control

Certified Applicator

Authorized installation of Geo-Seal can only be accomplished by one of Land Science Technologies Certified Applicators.

Membrane Inspections

For projects that will require a material or system (workmanship and material) warranty, Land Science Technologies will require a manufacturer's representative or certified 3rd party inspector to inspect and verify that the membrane has been installed per the manufacturer's recommendations.

The applicator is responsible for contacting the inspector for inspection. Prior to application of the membrane, a notice period for inspection should be agreed upon between the applicator and inspector.

Material Yield

Material yield is one of the first indicators in determining if the Geo-Seal CORE layer has been installed correctly. A baseline standard for yield is as follows:

Material Container	60 dry mils	80 dry mils	100 dry mils
55 Gallon Drum	935 ft^2	660 ft2	550 ft2
275 Gallon Tote	4,675 ft^2	3,300 ft2	2,750 ft2
330 Gallon Tote	5,610 ft^2	3960 ft2	3,300 ft2

The estimated yield is 17 ft^2 per gallon for a 60 dry mil application using the recommended thickness, unless otherwise noted by a specified engineer or regulatory agency.

Yields can decrease based on the complexity of the foundation. Projects containing many penetrations and areas where a lot of detailing is required might reduce the material yield to 16 ft^2 or 15 ft^2 per gallon for a 60 mil membrane..

Millage Verification

The measurement tools listed below will help verify the thickness of the Geo-Seal CORE layer. As measurement verification experience is gained, these tools will help confirm thickness measurements that can be obtained by pressing one's fingers into the Geo-Seal CORE membrane.

To verify the mil thickness of the Geo-Seal CORE, the following measurement devices are required:

Mil reading caliper: Calipers are used to measure the thickness of coupon samples. To measure coupon samples correctly, the thickness of the Geo-Seal sheet layers must be taken into account (This is best done by obtaining a sample of the Geo-Seal BASE layer and then zeroing out the caliper to the Geo-Seal BASE layer). Mark sample area for repair.

Wet mil thickness gauge: A wet mil thickness gauge may be used to quickly measure the mil thickness of the Geo-Seal CORE layer. The thickness of the Geo-Seal sheet layers do not factor into the mil thickness reading, but the softness of the subgrade might result in inaccurate readings.

NOTE: When first using a wet mil thickness gauge on a project, collect coupon samples to verify the wet mil gauge thickness readings.

Needle nose digital depth gauge: A needle nose depth gauge can be used when measuring the Geo-Seal CORE thickness on vertical walls or in field measurements. Mark measurement area for repair.

To obtain a proper wet mil thickness reading, take into account the 5 to 10 percent shrinkage that will occur as the membrane fully cures. Not taking into account the thickness of the sheet layers, a freshly sprayed membrane should have a minimum wet thickness of 63 (5%) to 66 (10%) mils.

© 2010 Land Science Technologies

Visual Inspections

The guidelines outlined in this section provide ways to quantify and observe the proper installation of the Geo-Seal system. However, a visual inspection should also be done to ensure any visual imperfections are not present, i.e. fish-mouths, punctures, voids, etc. During a visual inspection, punctures in the Geo-Seal system should be easy to indentify due to the color contrasting layers of the system.

Membrane Testing Log

To aid in the inspection process and properly document the Geo-Seal membrane inspection, create a membrane testing log. We recommend creating the log by using the foundation plan (plan view) of the structure and then creating a 500 square foot grid over the foundation. If this is not able to be done, enclosed is a membrane testing log template that can also be used. (Appendix E)

Wet Mil Thickness Readings

A wet mil thickness gauge is one method to verify the mil thickness of the Geo-Seal CORE layer. An advantage to this method is the ability to verify the Geo-Seal CORE thickness by minimizing destructive coupon sampling.

1. Create a membrane testing log by obtaining a copy of the foundation plan and then draw a 500 square foot grid over the foundation plan. Make two copies of the membrane testing log; one should be used when collecting coupon samples and the other should be used when conducting the smoke test.

2. Note time, date, project name, inspector name, temperature and weather conditions on testing log.

3. Number each quadrant and inspect sequentially.

4. When arriving at each quadrant quickly assess if there are any conditions that might present any challenges in establishing a proper seal. Note areas and discuss with applicator.

5. Conduct a visual inspection of the membrane. Look for areas where a proper seal was not created, i.e. a fish-mouth at the termination and areas where the membrane might be sprayed thin. Mark areas needed for repair in the field with florescent paint or with chalk. Also make a note on the testing log.

6. Conduct a thickness sample in the area that is suspected to be sprayed thin and take three readings within 3" of one another. **When beginning a project, verify the wet mil gauge thickness reading by cutting a coupon sample and measuring the thickness with a caliper.** Once wet mil thickness readings have been confirmed and established, confirm wet mil thickness periodically by taking a coupon sample and caliper measurement.

7. After sampling 5 quadrants it is at the discretion of the inspector to continue collecting samples every 500 ft^2 or 1,000 ft^2.

8. This method will verify the thickness of the Geo-Seal CORE layer prior to it fully curing. Observed shrinkage of the Geo-Seal CORE layer during the curing process ranges from 5% to 10%. When taking uncured samples assume a minimum of 10% loss for horizontal surfaces and 5% for vertical surfaces. Assuming a 10% loss, the gauge should read a mil thickness between 65 and 70 mils (≥66 mils).

9. If using a wet mil gauge to verify a fully cured membrane the gauge should read 60 mils.

10. When testing is complete, send a copy of the membrane testing log to Land Science Technologies. Keep the coupon samples for the file, or send them to Land Science Technologies.

Coupon Sampling

Coupon sampling is the most accurate way to verify the Geo-Seal CORE thickness. However, please note that taking too many coupon samples, or destructive samples, can be counter-productive. To collect a coupon sample the following steps should be followed:

1. Create a membrane testing log by obtaining a copy of the foundation plan and then draw a 500 square foot grid over the foundation plan. Make two copies of the membrane testing log, one should be used when collecting coupon samples and the other should be used when conducting the smoke test.

2. Note time, date, project name, inspector name, temperature and weather conditions on testing log.

3. Number each quadrant and inspect sequentially.

4. When arriving at each quadrant quickly assess if there are any conditions that might present any challenges in establishing a proper seal. Note areas and discuss with applicator.

5. Conduct a visual inspection of the membrane. Look for areas where a proper seal was not created, i.e. a fish-mouth at the termination and areas where the membrane might be sprayed thin. Mark areas needed for repair in the field with florescent paint or with chalk. Also make a note on the testing log.

6. Calibrate mil reading caliper to account for the thickness of the Geo-Seal BASE layer. This is best done by obtaining a sample of the Geo-Seal BASE layer and then zeroing out the caliper to the Geo-Seal BASE layer.

7. Collect a coupon sample in the area that is suspected to be sprayed thin. Use a box cutter to cut a 3 square inch sample from the membrane. Measure each side to confirm the specified minimum thickness has been obtained. Number each sample and save in the job file. Mark the area for repair in the field and on the site plan.

8. After sampling 5 quadrants it is at the discretion of the inspector to continue collecting samples every 500 ft^2 or 1,000 ft^2.

9. Samples may be collected prior to the Geo-Seal CORE layer fully curing. Observed shrinkage of the Geo-Seal CORE layer during the curing process for horizontal surfaces is 10%. Assuming a 10% loss, a minimum of 66 mills thickness should be measured for a cured measurement of 60 mils.

10. When testing is complete, send a copy of the membrane testing log to Land Science Technologies. Keep the coupon samples for the file, or send them to Land Science Technologies.

Smoke Testing

This test is intended to visually verify and confirm the proper installation of the Geo-Seal system. Land Science Technologies requires a smoke test on all projects in order to obtain a warranty. The smoke test will be performed by the applicator.

Smoke testing should occur after the Geo-Seal CORE layer has been installed and mil thickness verified. Smoke testing may occur after the Geo-Seal BOND layer is installed, if preferred by the applicator. Upon completion of the original smoke test, additional smoke tests can be conducted per the membrane manufacturer's, specifying engineer or regulatory agency's request. To conduct a smoke test follow these steps:

1. One smoke test can cover between 2000-3000 square feet per test. However, coverage will greatly depend on the sub grade under the membrane. On sites where multiple smoke tests will be needed, use the first two smoke tests to estimate the coverage area per test.

2. Visual verification of soundness of seams, terminations and penetrations should be performed. Identify/correct any apparent deficiencies and/or installation problems.

3. Note time, date, project name, inspector name, temperature and weather conditions on testing log. In addition, record humidity, barometric pressure, and wind speed/direction. Confirm wind speed is below 15 mph. Visual identification of leaks becomes more difficult with increasing wind speed.

4. Cap other vent outlet(s) not being used. If the installation has no sub-slab vent system or the membrane is isolated from the vent system, connect the smoke testing system directly to the membrane

using a temporary boot collar or other method. Insert the smoke test hose into coupon sampling locations, creating a seal around the smoke test hose with a rag.

5. Activate the smoke generator/blower system and connect to sub-slab vent riser or directly to the membrane.

6. To confirm the adequate flow of smoke under the membrane cut a 2" vent in the membrane to facilitate the purging of air pockets under it. If working properly, smoke will consistently flow though the 2" vent. If a low rate of smoke flow is observed it is an indication of poor smoke flow under the membrane. If low flow does occur, insert the smoke testing hose into the 2" membrane vent.

7. Mark sampling locations with fluorescent paint or chalk. Repair sampling locations per Land Science Technologies recommendations

8. Maintain operation of smoke generator/blower system for at least 15 minutes following purging of membrane. Thoroughly inspect entire membrane surface. Use fluorescent paint or chalk to mark/label any leak locations. Mark/label leak locations on testing log. NOTE: The duration of the smoke test will vary depending on the size of the area being tested. To help determine the duration, monitor the pressure building up under the membrane. If excessive lifting of the membrane occurs, decrease the duration or pressure of the smoke test.

9. Prepare membrane inspection log. Identify the type of leak found, i.e. poor seal around penetration, fish-mouth, puncture, etc.

10. Repair leak locations marked in step 7 and step 8 per procedures outlined in "Geo-Seal Repair Procedures" section using Geo-Seal CORE or Geo-Seal DETAIL.

11. Repeat steps 4 through 10 as necessary to confirm the integrity of the membrane.

12. Complete the smoke testing inspection form indicating the successful completion of the smoke test.

Post Installation Inspection

After a manufacturer's representative or 3rd party inspector signs off on the membrane installation and the steel workers begin to install the rebar, it is recommended to conduct a visual inspection prior to the pouring of concrete. Damages are most likely to occur during this time and it is imperative that punctures are indentified prior to the placement of the slab. The system configuration of Geo-Seal, the top white Geo-Seal BOND layer with a middle black layer, will make rebar punctures easy to identify when conducting a visual inspection.

09/08

GEOSEAL CORE MATERIAL SAFETY DATA SHEET

LAND SCIENCE TECHNOLOGIES
1011 Calle Sombra, Ste., 110
San Clemente, CA 92673
Phone: 949-366-8000

1. PRODUCT IDENTIFICATION

Trade Names: Geo-Seal CORE, Geo-Seal CORE Detail
Chemical Name: Asphalt Emulsion
Synonyms: N/A
Hazardous Ingredients/OSHA: CHEMICAL FAMILIES:

A. Bitumen/Asphalt
B. Synthetic rubber
C. Fatty acids
D. Polymers

Hazard: No evidence of serious health hazards exists.
Carcinogenic ingredients/OSHA/NTP: Bitumen IARC: None

Ingredient	Percentage	C. A. S. #
Asphalt	50-60%	8052-42-4
Water	20-40%	7732-18-5
Latex:		9003-55-8
Styrene Latex	0-15%	100-42-5
Butadiene Latex	0-15%	106-99-0
Sodium Hydroxide	.1-1%	1310-73-2
Amino Ethanol	.01-.1%	34375-28-5

2. WARNING STATEMENTS

Avoid prolonged or frequent skin contact, as the presence of emulsifying and de-emulsifying agents during application may irritate the skin.

3. PHYSICAL AND CHEMICAL DATA

Appearance: Brown to black
Specific Gravity: (H_2O = 1): 1.028 (S) 1.034 (R) 1.13 (T)
Solubility in Water: Insoluble
Percent Volatiles: None
Boiling Point: N/A
Vapor Pressure (mm Hg): N/A
Vapor Density (Air = 1): N/A
Evaporation Rate: N\A

4. FIRE PROTECTION

Bitumen emulsions are water based products and as such will not burn. In cases of fire in the vicinity of drums, cool with water.

5. REACTIVITY DATA

Contact with strong oxidizing agents may create geling and water condensation.

6. HEALTH HAZARD DATA

Exposure Limits: Avoid prolonged or frequent skin contact.

7. PHYSIOLOGICAL EFFECTS SUMMARY

Acute: Skin irritation and rash
Chronic: Dermatitis

8. PRECAUTIONS FOR SAFE HANDLING

Avoid contact with eyes.
Avoid inhalation.
Avoid prolonged or frequent skin contact.
Avoid ingestion.

9. PROTECTION AND CONTROL MEASURES

Protective Equipment: Use of clothing, gloves, and/or barrier cream is recommended for skin protection.
Respiratory Protection: Inhalation should be avoided, but is not considered to be hazardous.
Ventilation: Use local exhaust ventilation when applying in an enclosed area.

10. EMERGENCY AND FIRST AID PROCEDURES

For ingestion: DO NOT induce vomiting. Keep at rest and get prompt medical attention.
For eye contamination: Irrigate eyes with water.
For skin contact: Wash affected areas of the body with proprietary hand cleaner, then wash with soap and water.

Contact physician as needed for any of the above occurrences.

11. SPILL AND DISPOSAL PROCEDURES

Contain spillages with sand or earth and remove by normal methods. Dispose of according to State and Local regulations. If the Bitumen enters a water course or sewer, advise respective water authority. The non-cured and cured material is non-toxic and non-flammable and can be disposed of in land fill sites.

Other Precautions: For Additional Information Contact:

Land Science Technologies
1011 Calle Sombra, Ste., 110
San Clemente, CA 92673
(949) 366-8000

Information presented herein has been compiled from sources considered to be dependable and is accurate and reliable to the best of our knowledge and belief but is not guaranteed to be so. Nothing herein is to be construed as recommending any practice or any product in violation of any patent or in violation of law or regulation. It is the users responsibility to determine for himself the suitability of any material for a specific purpose and to adopt such safety precautions as may be necessary. We make no warranty as to the results to be obtained in using any material and, since conditions of use are not under our control, we must necessarily disclaim all liability with respect to the use of any material supplied by us.

8/03

Geo-Seal BASE and BOND: Material Safety Data Sheet

Land Science Technologies
1011 Calle Sombra
San Clemente, CA 92673

PHONE: 949-366-8000

1. PRODUCT IDENTIFICATION

Trade Name: Geo-Seal BASE, Geo-Seal BOND
Chemical Name: POLYMERIC COMPONENTS, GEOTEXTILE FABRIC
Synonyms: N/A
Hazardous Ingredients/OSHA: NO HAZARDOUS INGREDIENTS

THIS PRODUCT IS SUPPLIED IN COMPLIANCE WITH THE TSCA REPORTING REUQIREMENTS.

Carcinogenic Ingredients/OSHA/NTP: NONE
IARC: NONE
Transportation information: CONTAINS NO HAZARDOUS INGREDIENTS
Transportation emergency: Land Science Technologies, 949-366-8000

2. PHYSICAL AND CHEMICAL DATA

Appearance and Odor: White Solid Sheet, Odorless
Specific Gravity (Water = 1): 0.90
Vapor Pressure (mm Hg): Not Determined
Vapor Density (Air = 1): Not Determined
Evaporation Rate: (Butyl Acetate - 1): N/A
Auto Ignition Temperature: Not Determined

Solubility in Water: Negligible, below 0.1%
Percent Volatiles: None
Boiling Point: Degrees: Not Determined
Melting Point: 320° F

3. FIRE AND EXPLOSION DATA

Flash Point: N/A
Flammable limits %: Lower N/A Upper N/A
Extinguishing Media: Agents approved for Class A hazards (e.g. foam, steam) or water fog.
Special Fire Fighting Procedures: Firefighters should wear full bunker gear, including a positive pressure self-contained breathing apparatus.
Unusual Fire and Explosion Hazards: None identified.

4. REACTIVITY DATA

Stability: Stable Conditions to avoid: Keep away from ignition sources (e.g. heat, sparks and open flames).
Incompatibility (materials to avoid): None Identified
Hazardous Decomposition or Byproducts: Incomplete burning can produce carbon monoxide and/or carbon dioxide and other harmful products.
Hazardous Polymerization: Will not occur

5. HEALTH HAZARD DATA

Route(s) of Entry: Inhalation: No Skin: No Ingestion: No
Health Hazards (Acute & Coronic): Will not present any health hazards under normal processing conditions.
Eye & Skin Contact: None Identified.
Skin Absorption: Non-toxic.
Inhalation: No significant irritation expected.
Ingestion: No significant health hazards identified.
Carcinogenicity: Unrelated NTP: No IARC: No OSHA Regulated: No

6. PROTECTION AND CONTROL MEASURES

Precautions to be taken in handling and storing: Store away from heat, ignition sources and open flame in accordance with applicable regulations.
Respiratory Protection: Not required under normal process conditions.
Ventilation: Local Exhaust

Protective Gloves: Not required.
Eye Protection: Not required.
Other Protective clothing or equipment: Not required.
Work/Hygienic Practices: Wash hands after handling and before eating.

7. EMERGENCY AND FIRST AID PROCEDURES

In Case of Combustion (550°)" Eye Contamination: Flush with large amounts of water for 20 minutes lifting upper and lower lids occasionally. Get medical attention.
Skin contact: Thoroughly wash exposed area with soap and water. Remove contaminated clothing. Launder contaminated clothing before reuse.
Inhalation: If overexposure occurs, remove individual to fresh air. If breathing stops, administer artificial respiration. Get medical attention.
Ingestion: If a large amount of material is swallowed **DO NOT INDUCE VOMITING**. If vomiting begins lower victim's head in an effort to prevent vomit from entering lungs and get medical attention.

8. SPILL AND DISPOSAL PROCEDURES

Spill is not applicable. Material is normally in solid form.

Land Science Technologies 949-366-8000
1011 Calle Sombra
San Clemente, CA 92673

Information presented herein has been compiled from sources considered to be dependable and is accurate and reliable to the best of our knowledge and belief but is not guaranteed to be so. Nothing herein is to be construed as recommending any practice or any product in violation of any patent or in violation of law or regulation. It is the users responsibility to determine for himself the suitability of any material for a specific purpose and to adopt such safety precautions as may be necessary. We make no warranty as to the results to be obtained in using any material and, since conditions of use are not under our control, we must necessarily disclaim all liability with respect to the use of any material supplied by us.

ATTACHMENT C

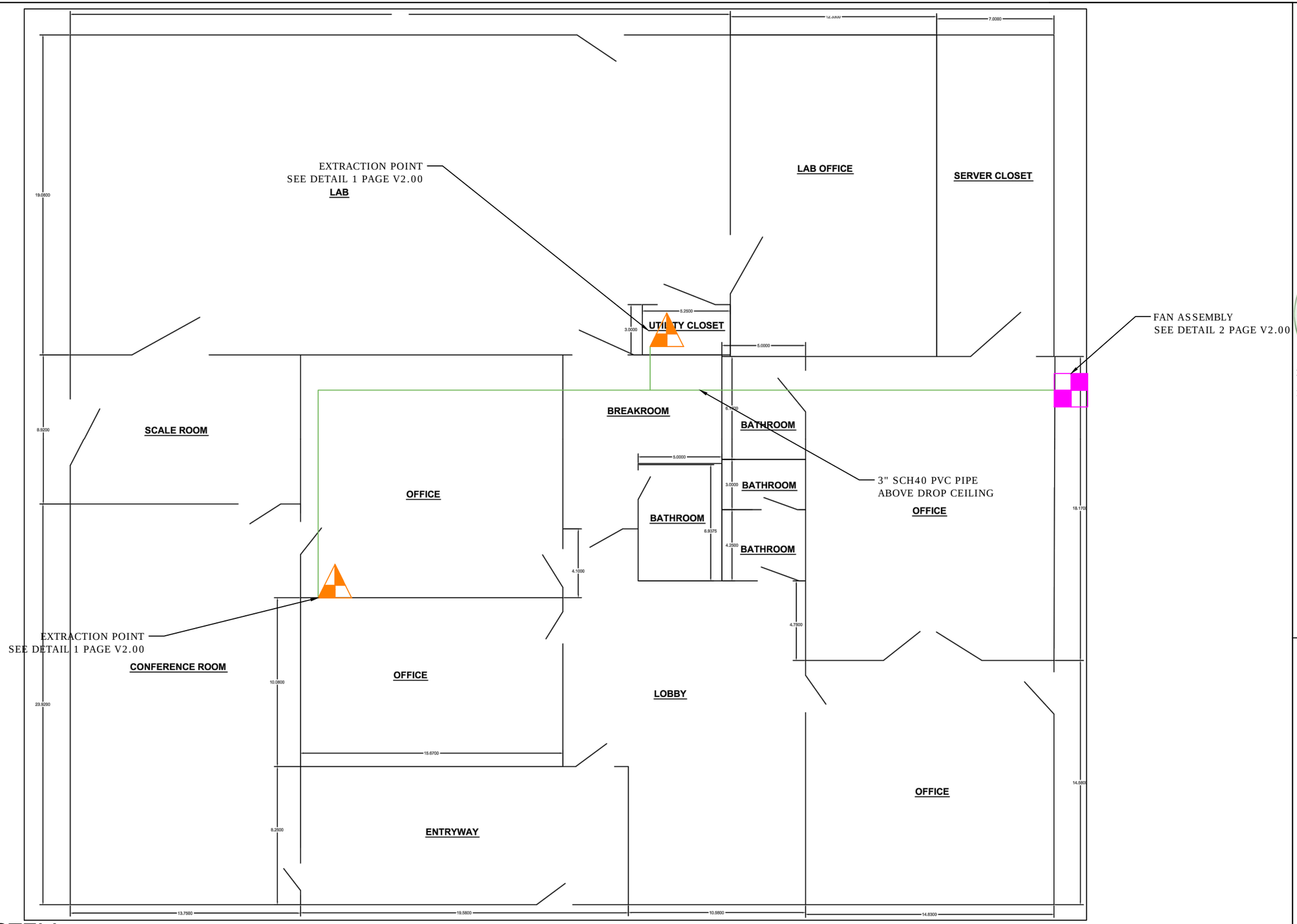

DRAFT LAYOUT

SSD SYSTEM

SCALE: NONE

1

V0.00

DRAFT - NOT FOR CONSTRUCTION

AZ SOLUTIONS, INC.
VAPOR REMOVAL SPECIALISTS

EVENT: DATE:

DRAFT 9.6.16

PROJECT:
VEROS ENERGY
MOUNDVILLE, AL

DRAWN BY: TONY MCDONALD

DATE: 9.6.16

FILENAME: 090616-2

Ohio License Number: RC61

DRAWING:

V0.00

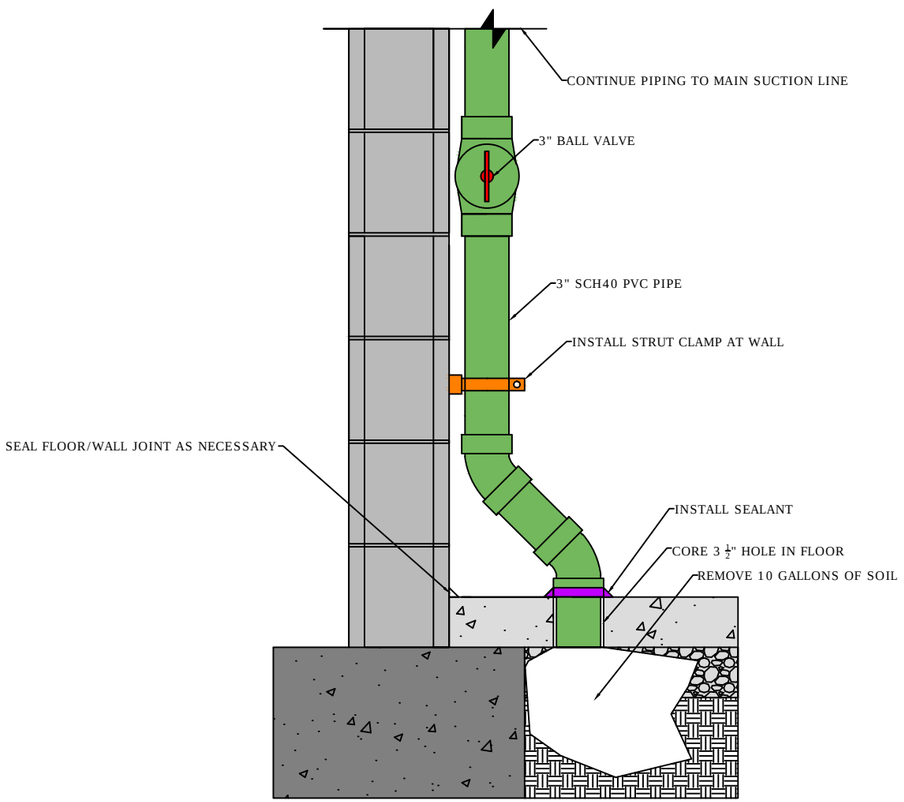

DRAFT DEATIL

1 V2.00

EXTRACTION POINT

SCALE: NONE

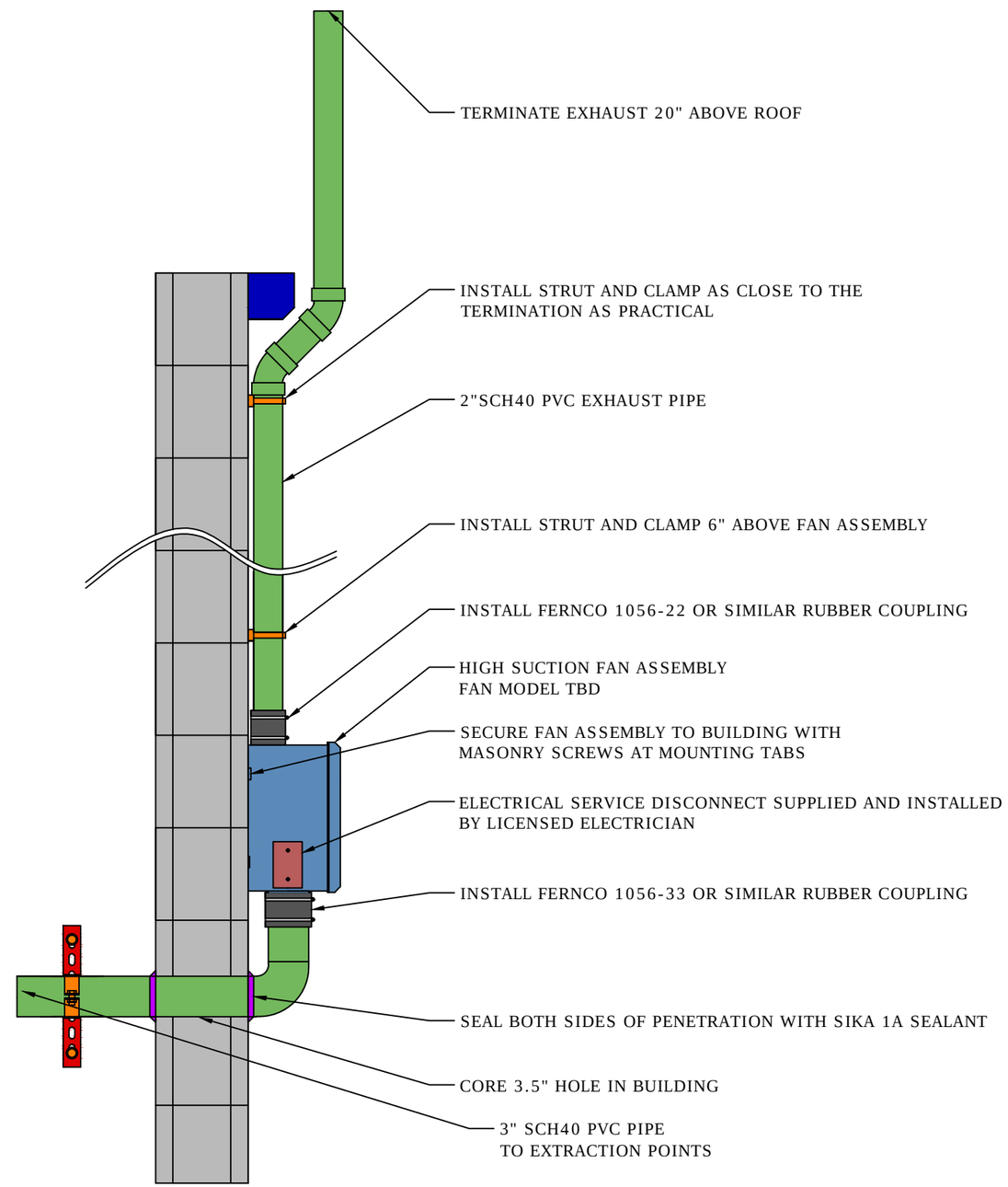

DRAFT - NOT FOR CONSTRUCTION

DRAFT DETAIL

2 V2.00

FAN ASSEMBLY

SCALE: NONE

AZ SOLUTIONS, INC.
VAPOR REMOVAL SPECIALISTS

EVENT: DATE:
DRAFT 9.6.16

PROJECT:
VEROS ENERGY
MOUNDVILLE, AL

DRAWN BY: TONY MCDONALD
DATE: 9.6.16
FILENAME: 090616-2
Ohio License Number: RC61

DRAWING:
V2.00

Voluntary Cleanup Plan

Moundville Biodiesel Facility
12982 Cherokee Bend Drive
Moundville, Tuscaloosa County, Alabama
VCP Site No.: 461-125-117

June 15, 2016

Terracon Project No. E1157122

Prepared for:
Veros Energy, LLC
Moundville, Alabama

Prepared by:
Terracon Consultants, Inc.
Birmingham, Alabama

terracon.com

Terracon

Environmental ■ Facilities ■ Geotechnical ■ Materials

June 15, 2016

Terracon

Alabama Department of Environmental Management
Redevelopment Section, Land Division
Post Office Box 301463
Montgomery, Alabama 36130-1463

Attention: Ms. Crystal Collins, Project Manager

Re: **Voluntary Cleanup Plan**
Moundville Biodiesel Facility
12982 Cherokee Bend Drive
Moundville, Tuscaloosa County, Alabama
VCP Site No.: 461-125-117
Terracon Project No.: E1157122

Dear Ms. Collins:

On behalf of Veros Energy, LLC, Terracon Consultants, Inc. (Terracon) has prepared this Voluntary Cleanup Plan for the above-referenced site per the Alabama Land Recycling and Economic Redevelopment Act (ALRERA) and in accordance with Alabama Department of Environmental Management (ADEM) Administrative Code R. 335-15-4-.04 *Voluntary Cleanup-Work Plans*. A check for $11,060.00 to cover the ADEM fee associated with reviewing the Cleanup Plan was submitted to the Department on December 8, 2015.

If you have any questions or comments regarding this plan, please contact us at (205) 942-1289.

Sincerely,
Terracon Consultants, Inc.

Trey G. Noland, P.G.
Group Manager

Frank M. Nowicki
Senior Project Professional

ec: Mr. Rob McNaughton
Mr. Todd Allam; Allam Alternative Energy, LLC
Mr. Michael Shiner; Tucker Arensberg, PC
Mr. Michael Lies; Lies Energy, LLC
Ms. Mary King, CEC

attachments

June 15, 2016

Terracon

Alabama Department of Environmental Management
Redevelopment Section, Land Division
Post Office Box 301463
Montgomery, Alabama 36130-1463

Attention: Ms. Crystal Collins, Project Manager

Re: **Voluntary Cleanup Plan**
Moundville Biodiesel Facility
12982 Cherokee Bend Drive
Moundville, Tuscaloosa County, Alabama
VCP Site No.: 461-125-117
Terracon Project No.: E1157122

Dear Ms. Collins:

On behalf of Veros Energy, LLC, Terracon Consultants, Inc. (Terracon) has prepared this Voluntary Cleanup Plan for the above-referenced site per the Alabama Land Recycling and Economic Redevelopment Act (ALRERA) and in accordance with Alabama Department of Environmental Management (ADEM) Administrative Code R. 335-15-4-.04 *Voluntary Cleanup-Work Plans*. A check for $11,060.00 to cover the ADEM fee associated with reviewing the Cleanup Plan was submitted to the Department on December 8, 2015.

If you have any questions or comments regarding this plan, please contact us at (205) 942-1289.

Sincerely,
Terracon Consultants, Inc.

Trey G. Noland, P.G.
Group Manager

Frank M. Nowicki
Senior Project Professional

ec: Mr. Rob McNaughton
Mr. Todd Allam; Allam Alternative Energy, LLC
Mr. Michael Shiner; Tucker Arensberg, PC
Mr. Michael Lies; Lies Energy, LLC
Ms. Mary King, CEC

attachments

TABLE OF CONTENTS

PAGE

1.0 INTRODUCTION 1
1.1 Standard of Care 1
1.2 Additional Scope Limitations 1
1.3 Reliance 1
1.4 Objective 2
2.0 SITE LOCATION AND DESCRIPTION 2
2.1 Site Location and Property Features 2
2.2 Site Background 2
2.2.1 Eastman/Lawter Operations (1976 – 2002) 3
2.2.2 Closure Activities (2002 – 2005) 6
2.2.3 Biodiesel Operations (2005 – present) 7
3.0 SUMMARY OF RECENT ASSESSMENTS 8
3.1 Groundwater Monitoring 8
3.2 Shallow Soil Assessment 10
3.3 Sub-Slab Vapor Survey 13
3.4 Indoor Air Quality Study 16
4.0 ALABAMA RISK-BASED CORRECTIVE ACTION EVALUATION 17
4.1 Exposure Assessment 18
4.1.1 Sources and Release Mechanisms 18
4.1.2 Transport Media 18
4.1.3 Receptors 18
4.1.4 Routes of Exposure 18
4.1.5 Site Conceptual Exposure Model 19
4.1.6 Groundwater Resource Protection 19
4.1.7 Surface Water and Stream Protection 19
4.1.8 Ecological Exposure 19
4.2 Risk Management-1 (RM-1) Evaluation 20
4.3 Risk Management-2 (RM-2) Evaluation 20
4.3.1 Selection of Constituents of Concern 20
4.3.2 Representative Concentrations 20
4.3.3 Toxicological Properties 22
4.3.4 Physical and Chemical Properties 23
4.3.5 Exposure Factors 23
4.3.6 Fate and Transport Parameters 23
4.3.7 Models and Equations 24
4.3.8 Cumulative Risk Evaluation 25
5.0 PROPOSED CORRECTIVE ACTION 25
5.1 Vapor Intrusion Mitigation 26
5.1.1 Vapor Barrier 26
5.1.2 Sub-slab Depressurization 26
5.2 Class 1 Environmental Covenant 27

TABLE OF CONTENTS (cont')

6.0 FUTURE LAND USE 27
7.0 CONCLUSIONS AND RECOMMENDATIONS 28

TABLES

Table 1 – Summary of Groundwater Elevation Data
Table 2 – Summary of Detected Constituents in Groundwater
Table 3 – Summary of Detected Constituents in Soil
Table 4 – Summary of Detected Constituents in Sub-Slab Vapor
Table 5 – Summary of Indoor Air Analytical Results

EXHIBITS

Exhibit 1 Topographic Map
Exhibit 2 Site Diagram
Exhibit 3 Potentiometric Surface Map (February 18, 2016)
Exhibit 4 COC Exceedances in Groundwater (June 29, 2015)
Exhibit 5 COC Exceedances in Groundwater (February 18, 2016)
Exhibit 6 COC Exceedances in Soil
Exhibit 7 COC Exceedances in Sub-Slab Vapor

APPENDICES

Appendix A Monitoring Well Sampling Records (February 18, 2016)
Appendix B Laboratory Analytical Reports
Appendix C Alabama Risk-Based Corrective Action Risk Management-2 Evaluation
Appendix D ProUCL 95% Upper Confidence Limit Output
Appendix E October 3, 2003 Statutory Warranty Deed

Voluntary Property Cleanup Plan
Moundville Biodiesel Facility
12982 Cherokee Bend Drive
Moundville, Tuscaloosa County, Alabama
Terracon Project No. E1157122
June 15, 2016

1.0 INTRODUCTION

At the request of Veros Energy, LLC, Terracon Consultants, Inc. (Terracon) prepared this Voluntary Cleanup Plan for VCP Site No. 461-125-117. This plan was prepared in accordance with ADEM Administrative Code R. 335-15-4-.04 *Voluntary Cleanup-Work Plans*.

1.1 Standard of Care

Terracon's services were performed in a manner consistent with generally accepted practices of the profession undertaken in similar studies in the same geographical area during the same time period. Terracon makes no warranties, either express or implied, regarding the findings, conclusions or recommendations. Please note that Terracon does not warrant the work of laboratories, regulatory agencies or other third parties supplying information used in the preparation of the report. These services were performed in accordance with the scope of work agreed with you, our client, as reflected in our proposal and were not restricted by ASTM E1903-97.

1.2 Additional Scope Limitations

Findings, conclusions, and recommendations resulting from these services are based upon information derived from the on-site activities and other services performed under this scope of work; such information is subject to change over time. Certain indicators of the presence of hazardous substances, petroleum products, or other constituents may have been latent, inaccessible, unobservable, nondetectable or not present during these services, and we cannot represent that the site contains no hazardous substances, toxic materials, petroleum products, or other latent conditions beyond those identified during this additional assessment. Subsurface conditions may vary from those encountered at specific borings or wells or during other surveys, tests, assessments, investigations or exploratory services; the data, interpretations, findings, and our recommendations are based solely upon data obtained at the time and within the scope of these services.

1.3 Reliance

This report has been prepared for the exclusive use of Veros Energy, LLC, Allam Alternative Energy, LLC, and Lies Energy, LLC. Any authorization for use or reliance by any other party (except a governmental entity having jurisdiction over the site) is prohibited without the express written authorization of the above parties and Terracon. Any unauthorized distribution or reuse is at the client's sole risk. Notwithstanding the foregoing, reliance by authorized parties will be

subject to the terms, conditions and limitations stated in the proposal, report(s), and Terracon's terms and conditions. The limitation of liability defined in the terms and conditions is the aggregate limit of Terracon's liability to the client and all relying parties unless otherwise agreed in writing.

1.4 Objective

The objective of this assessment was to evaluate exposure risks and determine appropriate remedial alternatives for the property based on analytical results obtained from previous groundwater monitoring events, a shallow soil assessment, a sub-slab vapor survey, and an indoor air quality study as described in Section 3.0 of this report.

2.0 SITE LOCATION AND DESCRIPTION

2.1 Site Location and Property Features

The property is located northwest of Alabama Highway 69 on Cherokee Bend Drive (Cracker Asphalt Road) in Moundville, Tuscaloosa County, Alabama. The approximately 55-acre site is depicted within the southeast quarter of Section 36, Township 24 North, Range 4 East and the southwest quarter of Section 31, Township 24 North, Range 5 East on the United States Geological Survey (USGS) 7.5-minute topographic quadrangles *Fosters, Alabama,* dated 1978, photorevised from 1969 and *Englewood, Alabama*, dated 1983, photorevised from 1970 (Exhibit 1). The coordinates of the central portion of the site are approximately 33.010118°N latitude and 87.626010°W longitude.

The site is further identified by Tuscaloosa County parcels 44-07-36-0-001-005.000, 43-09-31-0-001-014.001, and 43-09-31-0-001-014.002. More than 90 above-ground storage tanks (ASTs) containing vegetable oils, animal fats, and biofuels are currently located on site, including three 250,000-gallon ASTs within earthen dikes located northwest of the former Krumbhaar Plant. In general, smaller ASTs at the site are located within concrete secondary containment. An office building, two warehouses, and various other smaller structures are also located on site. The Black Warrior River bounds the site to the north and Carthage Branch bounds the site to the west and south. A metals fabrication facility and former asphalt plant is located adjacent to the east of the site. A Site Diagram displaying the subject site and adjoining properties is included as Exhibit 2.

2.2 Site Background

The site was converted to a biodiesel production facility in 2005 and began producing biodiesel fuel from animal fats. Numerous reactor tanks, raw material storage tanks, and process vessels are located on site. The principle chemicals associated with the production of alternative diesel fuels include vegetable oils and animal fats, sodium methylate, methanol, a catalyst (Amberlite

Resin), and phosphoric acid. Glycerin is produced as a by-product during the manufacturing process and is either recycled back into the system or sold as raw material to other manufacturers.

Prior to operating as a biodiesel facility, the site was occupied by Eastman Resins, Inc. (Eastman; formerly Lawter International, Inc.; Lawter), a manufacturer of hydrocarbon, gum rosin, and tall oil-based resins. The site was formerly farmland and originally developed as a chemical plant in the 1960s. Eastman/Lawter operated at the site for approximately 30 years until resin manufacturing operations ceased in July 2002. Eastman/Lawter was a large quantity generator (LQG) of hazardous waste.

Previous site investigations conducted at the site between 1985 and 2006 included the advancement and sampling of multiple soil borings, the installation and sampling of at least 17 monitoring wells and piezometers, filter cake waste sampling, pond sludge and surficial soil sampling, and the sampling of various surface water bodies and seeps. Previous sample results at the site have indicated that several volatile organic compounds (VOCs) and naphthalene are present in soil and groundwater at the site at concentrations above applicable screening levels. Previous site investigations have indicated that the likely source for these constituents in groundwater is the former off-site asphalt plant east and upgradient of the site, a former off-site above-ground storage tank (AST) utilized to store petroleum-based solvents and leased by Lawter from 1987 to 1991, and a former on-site waste-water treatment plant (WWTP) and associated surface impoundments utilized by Eastman/Lawter. The former leased AST was located on the adjacent former asphalt plant property to the east and the contents transferred to the Eastman/Lawter site by piping.

Site remediation activities have included removal of drum dumps (early 1980s), removal of filter cake storage areas and associated impacted soil (1980s), closure of a pond on the north bluff (circa 1993), and closure of surface impoundments associated with the former WWTP (2003). Details regarding these various site activities and other environmental investigations at the site are included in the sections below. Copies of selected historical reports referenced in the sections below were included as an appendix to the November 4, 2015 Voluntary Property Assessment Plan and Report.

2.2.1 Eastman/Lawter Operations (1976 – 2002)

Early environmental site activities/investigations during Eastman/Lawter operations have included the following:

- In March 1981 during an inspection by Alabama Department of Public Health personnel, an uncontrolled drum dump was noted on a slope near the south side of the former Krumbhaar Plant. In correspondence dated April 1981, State personnel required Lawter to submit a cleanup plan and take immediate action to prevent contamination of

Carthage Branch. An April 30, 1981 letter from The Rust Engineering Company to the Environmental Health Administration notes that drums had been relocated to various storage areas surrounding the plant and that drum dumping onto the slope area had ceased. Additionally, the Krumbhaar slope area was noted to be cleared and diked with runoff diverted to the on-site WWTP. Requirements for additional investigation or cleanup of the former drum dump area were not noted.

§ On-site storage of lime filter cake in waste piles was noted in ADEM documents from October 1981. The filter cake is described in documents as a "solvent saturated calcium fluoride filter cake." Analysis of the filter cake identified dicyclopentadiene (DCPD), trimethylbenzene (TMB), and naphthalene as the primary organic constituents. In 1983 Lawter began construction of a concrete storage bin for filter cake wastes until an appropriate landfill could be located. During an inspection in 1984, it was noted that apparent solvent was leaching out of the filter cake waste containment structure. Filter cake removal action documents from June 11, 1985 note three storage piles for the filter cake waste: 1) the concrete bin near the eastern side of the WWTP; 2) a waste pile located on the northern edge of the north bluff area; and 3) a debris pile near the eastern side of the north bluff area. Removal of the filter cake waste piles and underlying impacted soils to Chemical Waste's Emelle landfill was completed on June 27, 1985.

§ In March 1985, ADEM requested Lawter issue a preliminary groundwater assessment plan to include proposed monitoring well locations and a monitoring program. A groundwater assessment plan was submitted to ADEM in April 1985 and included a monitoring program for groundwater beneath the filter cake waste areas. Ten monitoring wells (MW-1, MW-2, MW-3, MW-4, MW-6, MW-8, MW-9, MW-10, MW-11, and MW-12; Exhibit 2) were installed at the site between September 30 and October 10, 1985. The 10 wells were sampled a total of three times between October and December 1985. Soil samples were collected from the well borings and also from the former filter cake waste and debris pile areas, within the dike of a solvent AST, at the tank truck loading area, and at the T-Pipe pond. CH2M Hill submitted the results of the assessment in a March 1986 report to ADEM. The report noted that multiple VOCs including benzene, toluene, ethylbenzene, xylene, styrene, propylbenzene, naphthalene, and DCPD were detected in nine of the 10 monitoring wells with the highest concentrations occurring in wells from the north bluff area (particularly MW-11) and wells along the eastern edge of the property. The report concluded that the VOC groundwater contamination originated from both upgradient and on-site sources with the north bluff pond area noted as a source of contaminants to groundwater. The report stated that soil samples indicated successful removal of filter cake contaminants from the filter cake waste bin area but noted remaining contamination in a portion of the north bluff area at approximately 10-20 inches. Additionally, organic constituents were identified in the soil around the solvent AST and at the T-Pipe Pond.

Following the issuance of the March 1986 report, monitoring well 5D was installed to provide additional data on the strata beneath the site property. CH2M Hill submitted the installation and geologic data from MW-5D in a September 1986 addendum to ADEM.

- The North Bluff Pond was drained in 1985. The sediments were excavated and disposed to a landfill in Jackson, Mississippi in 1993 and the area was seeded with grass. Subsequent sampling of the underlying clay liner indicated the material left in place was non-hazardous in nature.

- In July 1999, ARCADIS Geraghty & Miller prepared an *Interim Groundwater Contamination Assessment Report* to evaluate the east-adjacent former Wesselhoeft asphalt facility as the source of the onsite groundwater impacts, specifically a 352,000-gallon AST installed on the Wesselhoeft property in 1967. The AST was reportedly leased by Lawter from 1987 to 1991. Five monitoring wells (MW 13S, MW-13D, MW-14, MW-15, and MW-16) were installed on the Wesselhoeft property and sampled in addition to the existing on-site monitoring wells. Additionally, twenty-four borings were installed in the area of the Wesselhoeft AST. Results from the study indicated VOCs present in groundwater from multiple wells with the highest concentrations detected in wells located on the Wesselhoeft property and along the Wesselhoeft-Lawter property boundary (MW-11, MW-5D, MW-13S, MW-12, MW-13D and MW-16). Samples from the soil borings indicated detectable concentrations of constituents of concern (COC); however, concentrations did not exceed USEPA Generic Soil Screening Levels (SSLs) or ADEM Initial Screening Levels (ISLs). Five seeps were also sampled in the study with results confirming previous studies in which COCs were detected in one seep (Seep E located along the Black Warrior River). Site COCs were not identified in surface water samples collected from the Black Warrior River or Carthage Branch.

- In November 1999, ARCADIS Geraghty & Miller, Inc. prepared a Risk Assessment Report for Lawter, mapping out the potential human and environmental risks from exposure to the constituents detected at the facility. The risk assessment was prepared in accordance with the Alabama Risk-Based Corrective Action (ARBCA) tiered method for identifying constituents of potential concern (COPCs). Groundwater sampling of the on-site monitoring wells yielded multiple constituents of interest (COI) in all wells except MW 1, MW-2, and MW-9. The highest concentrations of COIs occurred in wells MW-5D, MW-3, MW-11, MW-12, and MW-13D. A Tier 1 evaluation indicated eight COPCs (benzene, DCPD, ethylbenzene, n-propylbenzene, styrene, 1,2,4-TMB, 1,3,5-TMB, and naphthalene) exceeded ADEM ISLs and Risk Based Concentrations (RBCs). Of the eight COPCs, only benzene, DCPD, and naphthalene exceeded the Tier 1 Risk Based Screening Levels (RBSLs) and required further evaluation. A Tier 2 evaluation calculated and utilized Site Specific Target Levels (SSTLs) in analyzing the remaining COPCs. The results from the initial Tier 2 evaluation indicated that none the constituents exceeded the Tier 2 SSTLs. However, ADEM documents from January 11, 2000

suggested an alternative pathway for groundwater ingestion exposure utilizing a different compliance well as a potential exposure point. Under the new scenario, benzene concentrations exceeded the Tier 2 SSTLs. ADEM recommended a reduced compliance monitoring program which included sampling wells MW-5D and MW-11 along with Seep E semi-annually.

2.2.2 Closure Activities (2002 – 2005)

A summary of environmental assessments conducted at the facility following the cessation of Eastman/Lawter operations is included below:

- Eastman entered the site into the ALRERA VCP in November 2002.

- A January 30, 2003 letter from ADEM to Eastman Resins acknowledges receipt of a December 30, 2002 letter documenting the completion of the closure of the 90-day storage area and indicates Eastman appears to have met the closure requirements. The ADEM letter also indicates that assessment and remediation of the site was being addressed under the VCP.

- A Voluntary Cleanup Plan dated May 13, 2003 (revised) was submitted to ADEM and titled *Industrial Wastewater Treatment Facility Decommissioning Plan: Includes Closure of T-Pipe and Settling Basin Impoundments*. The plan indicated that related closures included the aeration and mixing basins and the fire water pond in addition to the two WWTP ponds. Closure was to include: removal of water and sediment/sludge; removal of any discolored underlying clay; confirmation sampling; and backfilling/capping.

  The COPCs utilized to determine clean closure were identified as benzene, toluene, ethylbenzene, and xylene (BTEX); 1,2,4-TMB; 1,3,5-TMB; DCPD; n-propylbenzene; styrene; and naphthalene based on analysis of sludge. Soil-to-groundwater protection standards (SGPS) were calculated for each COPC as a screening level for determination of clean closure.

  After sludge and impacted soil (based on visual screening) was removed, soil samples were collected from multiple depths for analysis of COPCs and compared to the SGPS. The report states "The results from soil sampling described above indicated that it would be impractical to continue excavations to achieve clean closure levels…Therefore in-place closure including a cap will be conducted to sequester the remaining material in the two wastewater impoundments." Reportedly, more than 5,600 tons of dewatered sludge and stabilized soils were removed during the impoundment closure. The Cleanup Plan discussed the cap installation and notes that long-term maintenance of the cap will include mowing the grass.

Additionally, the Cleanup Plan addressed risk-based cleanup of the site through the implementation of institutional controls that included deed restrictions that prevented excavation or inappropriate development of restricted use areas, stipulated that wells for drinking or industrial use could not be drilled on the property, and that the property could not be used for residential purposes. An environmental covenant with Restricted Use Areas was recorded with the Tuscaloosa County Office of Probate in October 2003. Restricted Use Areas A-G are discussed below and illustrated on Exhibit 2.

Area A: This area is likely related to the unlabeled pond on figures within the 1986 Hydrogeologic Study, and later noted as "U-Pond" in the assessment reports from the 1990s.

Area B: This area appears to coincide with what is called the filter cake storage bin in the 1986 Hydrogeologic Study.

Area C: This area appears to coincide with what is noted as a pond in the north bluff area on the 1986 Hydrogeologic Study.

Area D: This area coincides with what is labeled as a drum storage area in the 2003 Decommissioning Plan.

Areas E and F: Areas E and F are possibly related to the former drum dump areas.

Area G: Encompasses three ponds that were the focus of the 2003 Decommissioning Plan/Cleanup Plan.

- A letter from ADEM dated August 7, 2003 indicates that Eastman did not pay the fees necessary to complete the VCP. No letter of concurrence was issued for the site.

- Post closure activities in the Cleanup Plan included continued semi-annual monitoring of three down-gradient wells (MW-3, MW-4, and MW-5D) and one up-gradient well (MW-11). Eastman submitted a request to the ADEM Groundwater Branch to cease groundwater monitoring activities based upon the Cleanup Plan specifications in a letter to ADEM on January 16, 2006. Groundwater monitoring continued on-site until June 2006. ADEM approved termination of groundwater monitoring activities in correspondence dated February 29, 2008.

2.2.3 Biodiesel Operations (2005 – present)

A summary of operations since the site was converted to a biodiesel facility is included below:

- In 2005, the property was acquired by Green River Biodiesel (Green River; formerly operating as Alabama Biodiesel Corporation) and an Application to reenroll the property in the VCP was submitted to ADEM on November 15, 2006. However, the Application appeared incomplete and the site was not admitted into the VCP. Green River Biodiesel declared bankruptcy in 2011.

- Alabama Land, LLC and Renovatio Energy Alabama, LLC purchased the land and facility from the Green River bankruptcy proceedings in November 2011. Renovatio Energy Alabama, LLC/Alabama Land, LLC spent the remainder of 2011 through March 2013 retrofitting the plant. The plant produced minimal quantities of biodiesel utilizing animal fats and vegetable oils during this time.

- Allam Alternative Energy LLC (Allam) and Lies Energy LLC (Lies) acquired the property from Renovatio Energy Alabama, LLC and Alabama Land, LLC through a foreclosure deed dated June 15, 2013. Veros Energy, LLC (Veros) began operations on this site on March 28, 2013. Veros spent the remainder of 2013 through the majority of 2014 retrofitting the plant. The plant produced minimal quantities of biodiesel utilizing animal fats and vegetable oils during this time. Veros, Allam, and Lies submitted a VCP Application and were admitted into the VCP as co-applicants and non-responsible parties in August 2015.

- HeroBX purchased the property in October 2015 and resumed biodiesel production at the facility in February 2016.

3.0 SUMMARY OF RECENT ASSESSMENTS

Terracon conducted fieldwork under a safety plan developed for this project. Work was performed using United States Environmental Protection Agency (EPA) Level D work attire consisting of hard hats, safety glasses, protective gloves, and protective boots. Terracon contacted the Alabama One-Call service and requested location markings for utilities that the service was responsible for before commencing intrusive activities at the site. Additionally, a ground penetrating radar survey was conducted prior to advancing subsurface borings at the facility.

3.1 Groundwater Monitoring

On June 29, 2015 and February 18, 2016, Terracon personnel conducted groundwater monitoring activities at the site in accordance with the Alabama Environmental Investigation and Remediation Guidance (AEIRG; revised September 2005). Prior to the June 2015 groundwater monitoring event, an inventory of the on-site and off-site monitoring wells was conducted. Of the existing monitoring wells, eight were sampled during the June 2015 monitoring event (MW-3, MW-4, MW-5D, MW-8, MW-9, MW-11, MW-12, and MW-15; Exhibit 2) and seven were

sampled during the February 2016 monitoring event. MW-8 was not sampled during the February 2016 monitoring event due to an obstruction in the well at approximately 35 feet below ground surface (ft-bgs). The remaining monitoring wells have been destroyed (MW-2, MW-13S, and MW-13-D), were dry (MW-6), or could not be located (MW-1, MW-10, and MW-14). MW-16 was located but is off site and was not sampled during the June 2015 or February 2016 monitoring events.

Water levels and total well depths were gauged for each accessible monitoring well at the site using an interface probe capable of measuring to an accuracy of 0.01 feet. Potentiometric data is presented in Table 1 and on Exhibit 3 (February 2016 event). The site monitoring wells to be sampled were then purged of three well volumes or until dry. Following purging, samples were collected using new disposable polyethylene bailers, dispensed into laboratory-provided bottles with appropriate preservatives, placed into a cooler containing ice, and transported under proper chain of custody to ESC Lab Sciences (ESC) in Mt. Juliet, Tennessee. During the June 2015 monitoring event, the samples were analyzed for dissolved Resource Conservation and Recovery Act (RCRA) metals by EPA Methods 6010B and 7470A, Volatile Organic Compounds (VOCs) including DCPD by EPA Method 8260B, and Semi-volatile Organic Compounds (SVOCs) by EPA Method 8270-SIM. DCPD is a Chemical of Potential Concern (COPC) identified in previous investigations at the site conducted under ADEM Groundwater Incident GW 94-5-7. Based on the results of the June 2015 sampling event, only VOCs and DCPD were analyzed during the February 2016 sampling event. Intrinsic groundwater parameters (pH, dissolved oxygen, oxidation/reduction potential, temperature, turbidity, and specific conductance) were also recorded during the monitoring events. Monitoring well sampling records for the February 2016 event are included in Appendix A.

Groundwater sample analytical results were compared to the EPA Maximum Contaminant Levels (MCLs) for tapwater. In the event no MCL was available for a given constituent, the results of the June 2015 sampling event were compared to the June 2015 RSLs for tapwater and results of the February 2016 sampling event were compared to the November 2015 RSLs for tapwater. RSLs corresponding to a Target Risk (TR) of $1x10^{-6}$ and a Hazard Quotient (HQ) of 0.1 were utilized. Constituent concentrations that exceed the applicable screening level are summarized in the tables below. Complete analytical results are included in Appendix B.

Table 3.1a Constituent Exceedances in Groundwater – June 29, 2015

Constituent	MW-3	MW-4	MW-5D	MW-8	MW-11	MW-12	MW-15	MCL/RSL
Benzene	--	0.0011	0.0014	**0.024**	**0.0343**	**0.0089**	--	**0.005**
DCPD	**0.0046**	**0.014**	--	**0.172**	**0.166**	**0.052**	**0.0018**	**0.000063**
Naphthalene	**0.0042**	--	**0.0113**	**0.264**	**0.692**	**0.41**	--	**0.0002**
Styrene	--	--	--	--	**0.126**	0.016	--	**0.1**
1,2,3-TMB	--	**0.0042**	**0.0028**	**0.0137**	**0.177**	**0.113**	**0.0011**	**0.001**
1,2,4-TMB	--	--	**0.0047**	**0.021**	**0.45**	**0.16**	--	**0.0015**
1,3,5-TMB	--	--	--	0.0012	**0.076**	**0.023**	--	**0.012**

Concentrations are in milligrams per liter (mg/l). MCL – EPA Maximum Contaminant Level for Tapwater. RSL – EPA Regional Screening Level for Tapwater. **Bold** – exceeds laboratory detection limit. Highlighted values exceed applicable screening level. DCPD – dicyclopentadiene. TMB – trimethylbenzene -- Not detected

Table 3.1b Constituent Exceedances in Groundwater – February 18, 2016

Constituent	MW-3	MW-4	MW-5D	MW-9	MW-11	MW-12	MW-15	MCL/RSL
Benzene	--	0.0015	0.0014	**0.00503**	**0.0089**	**0.0359**	--	**0.005**
DCPD	**0.00351**	**0.0179**	**0.0015**	--	**0.0346**	**0.249**	**0.00262**	**0.000063**
Naphthalene	--	**0.0182**	**0.0226**	--	**0.192**	**0.911**	--	**0.0002**
Styrene	--	--	--	--	**0.0111**	**0.15**	--	**0.1**
1,2,3-TMB	--	--	**0.0042**	--	**0.0568**	**0.246**	--	**0.001**
1,2,4-TMB	--	--	**0.0071**	--	**0.067**	**0.58**	--	**0.0015**
1,3,5-TMB	--	--	0.0016	--	**0.0072**	**0.0865**	--	**0.012**

Concentrations are in milligrams per liter (mg/l). MCL – EPA Maximum Contaminant Level for Tapwater. RSL – EPA Regional Screening Level for Tapwater. **Bold** – exceeds laboratory detection limit. Highlighted values exceed applicable screening level. DCPD – dicyclopentadiene. TMB – trimethylbenzene. -- Not detected

Summaries of the groundwater sample analytical results from these events are included on Table 2. Table 2 also contains historical groundwater monitoring results from the initial sampling event(s) and the previous four monitoring events for each well. Constituent exceedances in groundwater for the June 2015 and February 2016 events are illustrated on Exhibits 4 and 5, respectively.

The highest on-site detections of VOCs were located in the upgradient wells, MW-11 and MW-12. This indicates an off-site source from the adjacent former asphalt plant to the east. A review of historical groundwater data also indicates a continuing overall downward trend for COCs in a majority of the wells at the site.

3.2 Shallow Soil Assessment

On August 11-12, 2015, a Terracon geologist directed the advancement of 20 soil borings, including four borings advanced with a hand auger and 16 borings advanced utilizing a direct-push technology (DPT) drill rig, to a depth of up to five ft-bgs at the approximate locations indicated on Exhibit 6 and described below.

- Three borings (SB-1 through SB-3) were advanced in the vicinity of the ASTs located south of Restricted Use Area B;
- Four borings (SB-4 through SB-7) were advanced in the vicinity of ASTs located north of the warehouse and south of Restricted Use Area G;
- Five borings (SB-8 through SB-12) were advanced in the vicinity of the ASTs located east of Restricted Use Area D;
- One boring (SB-13) was advanced in the vicinity of the former re-fueling area located south of the former Krumbhaar plant;
- Three borings (SB-14 through SB-16) were advanced in the vicinity of a former drum storage area on the west end of the former Krumbhaar plant; and
- Utilizing a hand auger, four borings (HA-1 through HA-4) were advanced within the secondary containment area of the three approximately 250,000-gallon ASTs located northwest of the former Krumbhaar plant.

Drilling equipment and non-dedicated sampling equipment was cleaned using an Alconox® detergent wash and potable water rinse prior to commencement of the project and between collection of each sample.

Soil samples were logged to document lithology, color, and relative moisture content. In addition, the soil samples were field screened using sensory methods and a photoionization detector (PID) to detect the presence of VOCs. Elevated readings and/or VOC odors were encountered in 14 of the 20 borings advanced during this investigation. The soil sample interval exhibiting the highest PID reading was submitted to the laboratory for analysis.

Terracon's soil sampling program consisted of the following:

- Collection of one surficial soil sample from the upper one foot of each soil boring.
- Collection of one soil sample from each soil boring from the zone exhibiting the highest PID reading. If no elevated PID reading was observed, the sample was collected from the interval of most likely environmental impact, as determined in the field by the sampling professional.

The soil samples were placed in laboratory prepared containers, labeled, and placed on ice in a cooler, which were secured with a custody seal. The samples and completed chain-of-custody forms were transported to ESC and analyzed for VOCs (including DCPD) by EPA Method 8260B and SVOCs using EPA Method 8270C. In addition, surficial soil samples (0-1 ft-bgs) were analyzed for RCRA Metals by EPA Methods 7470A and 6010B. The surficial sample collected from SB-16 exhibited elevated total chromium and was therefore was further analyzed for hexavalent chromium.

The soil sample analytical results were compared to the June 2015 EPA RSLs (TR=1x10^{-6}, HQ = 0.1) for Industrial Soil. In the event no RSL was available for a given constituent, results were compared to the ADEM Preliminary Screening Values (PSVs) for commercial soil. Constituent concentrations that exceed the applicable screening level are summarized in the table below. Complete analytical results are included in Appendix B.

Table 3.2 Constituent Exceedances in Shallow Soil – August 2015

Boring/Depth	Arsenic	DCPD	Ethylbenzene	Naphthalene	1,2,3-TMB	1,3,4-TMB	Xylenes
SB-1 0-1FT	--	**309**	**27.3**	**295**	**167**	**347**	174
SB-1 1-3FT	NA	**487**	**37.8**	**446**	**259**	**684**	**289**
SB-2 0-1FT	--	**1.29**	--	0.272	0.233	0.409	0.0988
SB-4 0-1FT	--	**104**	23.4	**578**	**68**	**336**	110
SB-4 1-3FT	NA	**383**	**51**	**464**	**198**	**487**	232
SB-5 1-3FT	NA	**0.634**	0.024	3.32	0.0149	0.0169	--
SB-6 0-1FT	--	**15.1**	0.412	11.4	2.32	4.37	0.778
SB-6 3-5FT	NA	**34.9**	2.5	**18.2**	20.9	**52.6**	7.28
SB-9 3-5FT	NA	**362**	7.18	**1860**	**353**	**690**	49.7
SB-11 3-5FT	NA	**0.958**	0.031	1.29	0.403	0.971	0.329
SB-12 0-1FT	**3.39**	0.0148	--	0.0469	0.0073	--	--
SB-13 0-1 FT	**5.15**	--	--	0.0414	--	--	--
SB-14 0-1 FT	**4.32**	--	--	--	--	--	--
SB-16 0-1 FT	**16.7**	--	--	--	--	--	--
HA-2 3-5 FT	NA	**74.6**	1.56	**383**	**36.4**	**71.7**	10.5
HA-3 0-1 FT	**4.9**	0.0342	--	0.049	--	0.00797	--
HA-3 3-5 FT	NA	**654**	2.93	**573**	**94.4**	**540**	27.4
HA-4 3-5 FT	NA	**10.2**	12.4	**114**	**73.4**	**662**	95.4
RSL/PSV	**3.0**	**0.54**	**25**	**17**	**21**	**24**	**280**

Concentrations are in milligrams per kilogram (mg/kg). RSL – EPA Regional Screening Level for Industrial Soil. PSV – ADEM PSV for Commercial Soil. **Bold** – exceeds laboratory detection limit. Highlighted values exceed applicable screening level. DCPD – dicyclopentadiene. TMB – trimethylbenzene. -- Not detected. NA – Not Analyzed

- Arsenic was detected in the soil samples collected from SB-12 0-1 FT (3.39 milligrams per kilogram; mg/kg), SB-13 0-1 FT (5.15 mg/kg), SB-14 0-1 FT (4.32 mg/kg), SB-16 0-1 FT (16.7 mg/kg), and HA-3 0-1 FT (4.9 mg/kg) at concentrations greater than the EPA RSL of 3.0 mg/kg;

- Chromium (total) was detected in the soil sample collected from SB-16 0-1 FT (134 mg/kg) at a concentration greater than the ADEM PSV for total chromium of 64 mg/kg. Hexavalent chromium in industrial soil has an EPA RSL of 6.3 mg/kg and trivalent chromium has an EPA RSL of 1.8 x 10^{6} mg/kg. The sample collected from SB-16 at 0-1 foot was further analyzed for hexavalent chromium. Results indicated that hexavalent chromium is not present in the soil sample collected from this location at a concentration above the EPA RSL.

- DCPD was detected in the soil samples collected from SB-1 0-1 FT (309 mg/kg), SB-1 1-3 FT (487 mg/kg), SB-2 0-1 FT (1.29 mg/kg), SB-4 0-1 FT (104 mg/kg), SB-4 1-3 FT (383 mg/kg), SB-5 1-3 FT (0.634 mg/kg), SB-6 0-1 FT (15.1 mg/kg), SB-6 3-5 FT (34.9 mg/kg), SB-9 3-5 FT (362 mg/kg), SB-11 3-5 FT (0.958 mg/kg), HA-2 3-5 FT (74.6 mg/kg), HA-3 3-5 FT (654 mg/kg), and HA-4 3-5 FT (10.2 mg/kg) at concentrations greater than the EPA RSL of 0.54 mg/kg;

- Ethylbenzene was detected in the soil samples collected from SB-1 0-1 FT (27.3 mg/kg), SB-1 1-3 FT (37.8 mg/kg), and SB-4 1-3 FT (51 mg/kg) at concentrations greater than the EPA RSL of 25 mg/kg;

- Naphthalene was detected in the soil samples collected from SB-1 0-1 FT (295 mg/kg), SB-1 1-3 FT (446 mg/kg), SB-4 0-1 FT (578 mg/kg), SB-4 1-3 FT (464 mg/kg), SB-6 3-5 FT (18.2 mg/kg), SB-9 3-5 FT (1,860 mg/kg), HA-2 3-5 FT (383 mg/kg), HA-3 3-5 FT (573 mg/kg), and HA-4 3-5 FT (114 mg/kg) at concentrations greater than the EPA RSL of 17 mg/kg;

- 1,2,3-TMB was detected in the soil samples collected from SB-1 0-1 FT (167 mg/kg), SB-1 1-3 FT (259 mg/kg), SB-4 0-1 FT (68 mg/kg), SB-4 1-3 FT (198 mg/kg), SB-9 3-5 FT (353 mg/kg), HA-2 3-5 FT (36.4 mg/kg), HA-3 3-5 FT (94.4 mg/kg), and HA-4 3-5 FT (73.4 mg/kg) at concentrations greater than the EPA RSL of 21 mg/kg;

- 1,2,4-TMB was detected in the soil samples collected from SB-1 0-1 FT (347 mg/kg), SB-1 1-3 FT (684 mg/kg), SB-4 0-1 FT (336 mg/kg), SB-4 1-3 FT (487 mg/kg), SB-6 3-5 FT (52.6 mg/kg), SB-9 3-5 FT (690 mg/kg), HA-2 3-5 FT (71.7 mg/kg), HA-3 3-5 FT (540 mg/kg), and HA-4 3-5 FT (662 mg/kg) at concentrations greater than the EPA RSL of 24 mg/kg;

- Total xylenes were detected in the soil sample collected from SB-1 1-3 FT (289 mg/kg) at a concentration greater than the EPA RSL of 280 mg/kg.

Complete analytical results for constituents detected in soil during the August 2015 soil investigation are summarized in Table 3 attached to this report. COC exceedances in soil are illustrated on Exhibit 6.

3.3 Sub-Slab Vapor Survey

On September 29, 2015, Terracon personnel directed the installation of 14 temporary sub-slab vapor implants (SS-1 through SS-14) at the approximate locations indicated on Exhibit 7. The

implants were installed in eight different on-site structures. The structures and locations were selected based on the presence of VOCs in shallow soils as indicated during the August 2015 shallow soil assessment. Buildings that are not fully enclosed, unoccupied, or are scheduled for demolition were not investigated.

A 1.25-inch-diameter drill bit attached to a hand-held hammer drill was utilized to drill through the concrete slab and approximately one to four inches into the sub-slab material. A 0.25-inch-diameter soil vapor implant with a 50-micron mesh filter was placed into the borehole below the concrete slab. One quarter-inch diameter Teflon® tubing was attached to the implant and extended above the foundation surface. Pre-sieved sand was placed into the borehole to a height of approximately one-inch above the implant. A hydrated granular bentonite seal was then placed in the borehole above the sand to the foundation surface.

To ensure a proper seal and that ambient air was not entering the borehole, a helium leak test was conducted at each implant location. A shroud was placed over the sampling implant, and tubing extending from the sampling implant was ported through the shroud. The shroud was filled with helium and the vapor sampling implant was purged using a syringe. Following purging, a sample was collected from the vapor sampling implant and field-tested for helium. If field tests indicated high levels of helium (>10%), the integrity of the seal was not acceptable, and the seal was either repaired or a new boring was advanced. If field tests did not indicate high levels of helium, then the seal around the borehole was assumed to be acceptable and a sample was collected.

Following installation of the vapor sampling implant and a successful helium leak test, samples were collected on October 1, 2015 from each location using summa canisters and sorbent tubes. Additionally, a “shut-in” test was performed on the summa canister, sorbent tubes, and sample train to check against leaks. Samples were submitted to H&P Mobile Geochemistry, Inc. in Carlsbad, California for analysis of VOCs using EPA Method TO-15 and DCPD using EPA Method TO-17. Due to the presence of water beneath the slab, a sample could not be collected from SS-10. After collection of the samples, the implants were abandoned and patched with bentonite and cement grout.

The detected constituents were compared to the Vapor Intrusion Screening Level (VISL) for industrial air. The VISL was calculated by applying a sub-slab attenuation factor (AF) of 0.03 to the EPA RSL for industrial air. The sub-slab AF of 0.03 is the default value recommended in the 2015 *OSWER Technical Guide for Assessing and Mitigating the Vapor Intrusion Pathway from Subsurface Vapor Sources to Indoor Air*. Constituent concentrations that exceed the applicable screening level are summarized below. Complete analytical results are included in Appendix B.

Table 3.3 Constituent Exceedances in Sub-slab Vapor – October 2015

Sample	Benzene	DCPD	1,1-DCA	Ethylbenzene	Naphthalene	TCE	1,2,4-TMB	m,p-Xylene	o-Xylene
SS1	0.033	**4.1**	--	0.0071	--	--	0.0089	0.025	0.0093
SS2	**0.057**	**37**	--	0.017	--	--	0.022	0.08	0.031
SS3	--	**0.046**	--	0.005	--	--	0.0069	0.014	0.0081
SS4	--	**0.0052**	--	0.0045	--	--	0.0056	0.013	0.0055
SS5	0.042	**1.2**	--	0.076	--	--	**0.27**	0.15	0.16
SS6	--	--	--	--	--	--	0.0089	0.013	0.0052
SS7	**0.11**	**40**	--	**2.4**	**0.11**	--	**56**	**7.8**	**12**
SS8	**1.7**	--	--	**3.6**	**0.21**	**0.17**	**54**	**5.5**	**12**
SS9	**1.1**	**63**	--	**510**	--	--	**100**	**510**	**66**
SS11	**3.8**	**48**	**2.9**	**9.8**	**0.1**	--	**21**	**17**	**18**
SS12	0.028	**0.0063**	--	0.011	--	--	0.036	0.042	0.018
SS13	0.0082	--	--	0.0093	--	--	0.07	0.069	0.024
SS14	--	--	--	0.0061	**0.0054**	--	0.012	0.021	0.0076
VISL	**0.053**	**0.004**	**0.257**	**0.163**	**0.012**	**0.029**	**0.103**	**1.47**	**1.47**

Concentrations are in milligrams per cubic meter (mg/m^3). VISL – Vapor Intrusion Screening Level, represents EPA RSL for Industrial Air with an applied attenuation factor of 0.03. **Bold** – exceeds laboratory detection limit. Highlighted values exceed applicable screening level. DCPD – dicyclopentadiene. DCA – dichloroethane. TMB – trimethylbenzene. TCE – trichloroethene. -- Not detected.

- Benzene was detected in the sub-slab vapor samples collected from SS-2 (0.057 mg/m^3), SS-7 (0.11 mg/m^3), SS-8 (1.7 mg/m^3), SS-9 (1.1 mg/m^3), and SS-11 (3.8 mg/m^3) at concentrations greater than the VISL of 0.053 mg/m^3.

- DCPD was detected in the sub-slab vapor samples collected from SS-1 (4.1 mg/m^3), SS-2 (37 mg/m^3), SS-3 (0.046 mg/m^3), SS-4 (0.0052 mg/m^3), SS-5 (1.2 mg/m^3), SS-7 (40 mg/m^3), SS-9 (63 mg/m^3), SS-11 (48 mg/m^3), and SS-12 (0.0063 mg/m^3) at concentrations greater than the VISL of 0.004 mg/m^3.

- 1,1-Dichloroethane (DCA) was detected in the sub-slab vapor sample collected from SS-11 (2.9 mg/m^3) at a concentration greater than the VISL of 0.257 mg/m^3.

- Ethylbenzene was detected in the sub-slab vapor samples collected from SS-7 (2.4 mg/m^3), SS-8 (3.6 mg/m^3), SS-9 (510 mg/m^3), and SS-11 (9.8 mg/m^3) at concentrations greater than the VISL of 0.163 mg/m^3.

- Naphthalene was detected in the sub-slab vapor samples collected from SS-7 (0.11 mg/m^3), SS-8 (0.21 mg/m^3), and SS-11 (0.10 mg/m^3) at concentrations greater than the VISL of 0.012 mg/m^3.

- Trichloroethene (TCE) was detected in the sub-slab vapor sample collected from SS-8 (0.17 mg/m^3) at a concentration greater than the VISL of 0.029 mg/m^3.

- 1,2,4-TMB was detected in the sub-slab vapor samples collected from SS-5 (0.27 mg/m^3), SS-7 (56 mg/m^3), SS-8 (54 mg/m^3), SS-9 (100 mg/m^3), and SS-11 (21 mg/m^3) at concentrations greater than the VISL of 0.103 mg/m^3.

- m,p-Xylene was detected in the sub-slab vapor samples collected from SS-7 (7.8 mg/m^3), SS-8 (5.5 mg/m^3), SS-9 (510 mg/m^3), and SS-11 (17 mg/m^3) at concentrations greater than the VISL of 2.93 mg/m^3.

- o-Xylene was detected in the sub-slab vapor samples collected from SS-7 (12 mg/m^3), SS-8 (12 mg/m^3), SS-9 (66 mg/m^3), and SS-11 (18 mg/m^3) at concentrations greater than the VISL of 1.47 mg/m^3.

Analytical results for constituents detected in sub-slab vapor during the September-October 2015 investigation are presented in Table 4 attached to this report. COC exceedances in sub-slab vapor are illustrated on Exhibit 7.

3.4 Indoor Air Quality Study

In order to investigate whether constituents detected in sub-slab vapor are present in indoor air at the site, personnel from Terracon mobilized to the site on April 17, 2016 to deploy 6-liter summa canisters and sorbent tubes in the on-slab buildings that are enclosed and routinely occupied by workers. Two samples were collected from the office building [one from the laboratory area (LAB-1) and one from the conference room (OFFICE-1)], one sample was collected from the control room (CR-1), and one sample was collected from the maintenance shop (MS-1). The locations of these buildings are illustrated on Exhibit 2.

The summa canisters were each equipped with 12-hour flow regulators and vacuum gauges. The canisters and sorbent tubes were sent via overnight courier to Galson Laboratories, Inc. in East Syracuse, New York for analysis of those constituents detected in sub-slab vapor at concentrations above the VISL (benzene, DCPD, 1,1-DCA, ethylbenzene, naphthalene, TCE, 1,2,4-TMB, m,p-xylene, and o-xylene). Benzene, 1,1-DCA, ethylbenzene, TCE, 1,2,4-TMB, m,p-xylene, and o-xylene were analyzed using EPA Method TO-15. DCPD was analyzed using OSHA Method 07, and naphthalene was analyzed using modified NIOSH Method 5506.

Concentrations of the detected constituents were compared to the EPA RSLs for industrial air. Constituent concentrations that exceed the RSLs are summarized below. Complete analytical results are included in Appendix B

Table 3.4 Constituent Exceedances in Indoor Air – April 2016

Sample ID	Benzene	DCPD	Naphthalene	1,2,4-TMB
Control Room (CR-1)	**0.0066**	**0.031**	**0.0005**	<0.001
Lab (LAB-1)	**0.0007**	<0.016	<0.0003	<0.001
Maintenance Shop (MS-1)	**0.0039**	**0.12**	<0.0003	**0.004**
Office (OFFICE-1)	<0.0006	<0.016	<0.0003	<0.001
EPA RSL	**0.0016**	**0.00013**	**0.00036**	**0.0031**

Concentrations are in milligrams per cubic meter (mg/m^3). EPA RSL – EPA Regional Screening Level for Industrial Air. **Bold** – exceeds laboratory detection limit. Highlighted values exceed applicable screening level. DCPD – dicyclopentadiene. TMB – trimethylbenzene.

- Benzene was detected in the indoor air samples collected from the control room (0.0066 mg/m^3) and the maintenance shop (0.0039 mg/m^3) at concentrations greater than the EPA RSL of 0.0016 mg/m^3.

- DCPD was detected in the indoor air samples collected from the control room (0.031 mg/m^3) and the maintenance shop (0.12 mg/m^3) at concentrations greater than the EPA RSL of 0.00013 mg/m^3. DCPD was not detected in the indoor air samples collected from the office building; however, the laboratory detection limit for these samples exceeded the EPA RSL for DCPD.

- Naphthalene was detected in the indoor air sample collected from the control room (0.0005 mg/m^3) at a concentration greater than the EPA RSL of 0.00036 mg/m^3.

- 1,2,4-TMB was detected in the indoor air sample collected from the maintenance shop (0.004 mg/m^3) at a concentration greater than the EPA RSL of 0.0031 mg/m^3.

Analytical results for constituents detected in indoor air during the April 2016 investigation are presented in Table 5 attached to this report.

4.0 ALABAMA RISK-BASED CORRECTIVE ACTION EVALUATION

Given that COCs exceed applicable screening levels at the site and in order to determine if cumulative risks are exceeded for human receptors at the site, Terracon conducted an Alabama Risk-Based Corrective Action (ARBCA) Evaluation utilizing data obtained during previous site investigations discussed in Sections 3.1 through 3.4 above. Details and results of the ARBCA Evaluation are outlined below. A copy of the ARBCA Evaluation is included as Appendix C of this document.

4.1 Exposure Assessment

4.1.1 Sources and Release Mechanisms

Although the source of the COCs in affected media at the site is not connected to a specific release(s), based on previous investigations described above, the likely source for COCs is the former off-site asphalt plant east and upgradient of the site, a former off-site above-ground storage tank (AST) utilized to store petroleum-based solvents and leased by Lawter from 1987 to 1991, and a former on-site waste-water treatment plant (WWTP) and associated surface impoundments utilized by Eastman/Lawter. There is no known continuing release of contaminants occurring at the site.

4.1.2 Transport Media

It is likely that the transport media for contaminant migration on the site was via surficial and subsurface soil to groundwater. Further potential on-site contaminant migration is from soil and groundwater to soil vapor to indoor air. Routes of exposure are discussed in greater detail in Section 4.1.4.

4.1.3 Receptors

During site reconnaissance and from aerial photographs, Terracon documented the surrounding land use and potential sensitive receptors within 1,000 feet of the site including areas or populations of potential concern such as hospitals, nursing homes, day care facilities, schools, etc. Based on the data collected during the assessment, Terracon did not identify sensitive on-site receptors that are likely to be impacted or potentially impacted by the COCs detected at the site.

The human receptors considered as part of this risk assessment are the on-site commercial worker and construction worker. Current deed restrictions prevent residential development on the property. Accordingly, the on-site resident adult and resident child were not considered during this risk assessment. Additionally, the trespasser receptor was not considered as the site is secured with a perimeter fence and guard shack restricting access. This site was entered into the ALRERA VCP as a “non-responsible party” and, as such, off-site exposure to receptors was not evaluated in the ARBCA evaluation.

4.1.4 Routes of Exposure

Potential on-site exposure routes include pathways for surficial soil, subsurface soil, and indoor air. The potential exposure routes for contaminants in the affected media for the commercial worker consist of dermal contact (surficial soil), ingestion (surficial soil), outdoor inhalation of soil particulates (surficial soil), and indoor inhalation of vapors (indoor air). The potential exposure

routes for contaminants in the affected media for the construction worker consist of dermal contact, ingestion, and outdoor inhalation of soil particulates (for soil up to the depth of construction).

As stated in Section 3.4.1 of the ARBCA Guidance Manual, outdoor inhalation of vapors was not evaluated due to the extreme dilution of outside air and the fact that sunlight degrades the majority of VOCs. Additionally, as indoor air quality data was collected at the site, this data was utilized in calculating the vapor intrusion contribution to the cumulative risk at the site in place of soil, groundwater, and soil vapor data.

Ingestion of groundwater is not considered a valid route of exposure for any receptor at the site as there are no groundwater wells on the site and use of groundwater is prohibited in accordance with recorded deed restrictions for the property (Appendix E).

4.1.5 Site Conceptual Exposure Model

The site conceptual exposure model (SCEM) for current and future land use conditions is graphically presented in the Risk Assessment and Management Group, Inc. (RAM) model output and represents the complete pathways described in Section 4.1.4 above. The SCEM is presented on Page 4 of Appendix C for the Risk Management-2 (RM-2) evaluation.

4.1.6 Groundwater Resource Protection

Water supply wells are not currently located on the site, and use of groundwater as a potential future water supply source is prohibited under recorded land use controls for the subject property (Appendix E). In accordance with ADEM Administrative Code R. 335-15-4-.04 (2) Content, *Voluntary Cleanup-Work Plans,* this Voluntary Cleanup Plan evaluated only potential on-site exposure routes and impacts. Given existing restrictions on the use of groundwater at the site, groundwater resource protection was not considered as part of this risk assessment.

4.1.7 Surface Water and Stream Protection

Carthage Branch and the Black Warrior River are located adjacent and off-site to the south, west and north of the property. In accordance with ADEM Administrative Code R. 335-15-4-.04 (2) Content, *Voluntary Cleanup-Work Plans,* evaluation of potential off-site exposure routes and impacts is not required. As such, surface water and stream protection were not evaluated as part of this risk assessment.

4.1.8 Ecological Exposure

Evidence of wetlands or sensitive ecological habitats were not observed on site. Consequently, the risk assessment focuses on potential human exposure.

4.2 Risk Management-1 (RM-1) Evaluation

Site-specific fate and transport data was utilized in the risk assessment. As such, an RM-2 Evaluation was performed as described in Section 4.3 below.

4.3 Risk Management-2 (RM-2) Evaluation

An RM-2 evaluation was completed for the site using the ARBCA Computational Software Version 2.1 developed by RAM, and the information and equations provided in the ARBCA Guidance Manual. RAM model data input and results are included in Appendix C.

4.3.1 Selection of Constituents of Concern

In order to determine which constituents detected at the site would be carried forward as constituents of concern (COCs) in the risk assessment, analytical data for constituents detected during the June 2015 and February 2016 groundwater assessments, the August 2015 soil assessment, the September 2015 sub-slab soil vapor survey, and the April 2016 indoor air quality study were compared to applicable screening levels as described in Sections 3.1 through 3.4 above. Those constituents that exceeded applicable screening levels in the affected media were carried forward as COCs in the risk assessment and include:

- Arsenic
- Benzene
- 1,1-Dichloroethane
- Dicyclopentadiene
- Ethylbenzene
- Naphthalene
- Styrene
- Trichloroethene
- 1,2,3-Trimethylbenzene
- 1,2,4-Trimethylbenzene
- 1,3,5-Trimethylbenzene
- Xylenes

4.3.2 Representative Concentrations

To be consistent with the models used and the assumptions made in this exposure assessment, the maximum concentrations of COCs detected in groundwater during recent monitoring (June 2015 and February 2016), in soil vapor during the October 2015 sub-slab vapor survey, and in indoor air during the April 2016 indoor air quality study were utilized as the representative concentrations in the ARBCA Evaluation for those media. In instances when the COC was not detected, one-half of the detection limit was utilized as the representative concentration. In the instance of 1,2,3-trimethylbenzene (TMB) in soil vapor and indoor air, TO-15 analytical methods do not permit this constituent to be detected when 1,2,4-TMB is present in a sample. However, based on conversations with the laboratory, it can be assumed that 1,2,3-TMB is not present at concentrations that exceed 1,2,4-TMB in a sample. Therefore, the representative concentration for 1,2,3-TMB in soil vapor was set to the maximum concentration of 1,2,4-TMB detected in soil

vapor at the site. Groundwater and soil vapor analytical data are presented in Tables 2 and 4, respectively. Complete analytical reports are included in Appendix B.

Representative concentrations for surficial and subsurface soil were calculated utilizing ProUCL statistical software, Version 5.0, available from the EPA. ProUCL was utilized to calculate the 95% upper confidence limit (UCL) incorporating analytical data from samples collected during the August 2015 soil assessment. In instances when an insufficient number of detections existed to calculate the UCL for a given constituent, the maximum concentration detected during the August 2015 soil assessment was utilized as the representative concentration. In instances when a COC was not detected in soil, one-half of the detection limit was utilized as the representative concentration. The ProUCL outputs for each COC are included in Appendix D. Surficial and subsurface soil data are presented on Table 3. Representative concentrations for each media at the site are summarized in the tables below.

Table 4.3.2a Representative Concentrations of COCs in Surficial Soil

Analyte	Representative Concentration	Calculation Method	Screening Level*
Arsenic	**5.4**	95% UCL	**3.0**
Benzene	0.282	½ Detection Limit**	**5.1**
1,1-Dichloroethane	0.282	½ Detection Limit**	**16**
Dicylcopentadiene	**184.3**	95% UCL	**0.54**
Ethylbenzene	8.92	95% UCL	**25**
Naphthalene	**219.1**	95% UCL	**17**
Styrene	0.999	Maximum Concentration^	**3500**
Trichloroethene	0.282	½ Detection Limit**	**1.9**
1,2,3-TMB	**102.3**	95% UCL	**21**
1,2,4-TMB	**274.5**	95% UCL	**24**
1,3,5-TMB	91.26	95% UCL	**1200**
Xylenes	119.4	95% UCL	**280**

Units in milligrams per kilogram (mg/kg). TMB – Trimethylbenzene. *Represents EPA RSL for Industrial Soil (Nov. 2015, TR=$1x10^{-6}$, HQ=0.1). Results in **bold** exceed the screening level. **Not detected in surficial soil. ^95% UCL could not be calculated, maximum concentration utilized.

Table 4.3.2b Representative Concentrations of COCs in Subsurface Soil

Analyte	Representative Concentration	Calculation Method	Screening Level*
Arsenic	NA	NA	**3.0**
Benzene	0.331	½ Detection Limit**	**5.1**
1,1-Dichloroethane	0.331	½ Detection Limit**	**16**
Dicylcopentadiene	**244**	95% UCL	**0.54**
Ethylbenzene	18.71	95% UCL	**25**
Naphthalene	**608.5**	95% UCL	**17**
Styrene	2.5	Maximum Concentration^	**3500**
Trichloroethene	0.331	½ Detection Limit**	**1.9**
1,2,3-TMB	**133.2**	95% UCL	**21**
1,2,4-TMB	**356.3**	95% UCL	**24**
1,3,5-TMB	59.43	95% UCL	**1200**
Xylenes	87.49	95% UCL	**280**

Units in milligrams per kilogram (mg/kg). NA – Not analyzed in subsurface soil. TMB – Trimethylbenzene. *Represents EPA RSL for Industrial Soil (Nov. 2015, TR=$1x10^{-6}$, HQ=0.1). Results in **bold** exceed the screening level. **Not detected in subsurface soil. ^95% UCL could not be calculated, maximum concentration utilized.

Table 4.3.2c Representative Concentrations of COCs in Groundwater

Analyte	Representative Concentration	Sample ID	Investigation	Screening Level*
Arsenic	0.005^	MW-11	June 2015 GWM	**0.01**
Benzene	**0.0359**	MW-12	February 2016 GWM	**0.005**
1,1-DCA	0.0005^	MW-12	February 2016 GWM	**0.0028**
DCPD	**0.249**	MW-12	February 2016 GWM	**0.000063**
Ethylbenzene	0.173	MW-12	February 2016 GWM	**0.7**
Naphthalene	**0.911**	MW-12	February 2016 GWM	**0.0002**
Styrene	**0.15**	MW-12	February 2016 GWM	**0.1**
TCE	0.0005^	MW-12	February 2016 GWM	**0.005**
1,2,3-TMB	**0.246**	MW-12	February 2016 GWM	**0.001**
1,2,4-TMB	**0.58**	MW-12	February 2016 GWM	**0.0015**
1,3,5-TMB	**0.0865**	MW-12	February 2016 GWM	**0.012**
Xylenes	0.616	MW-11	June 2015 GWM	**10**

Units in milligrams per liter (mg/l). DCA – Dichloroethane. DCPD – Dicyclopentadiene. TCE – Trichloroethene. TMB – Trimethylbenzene. *Represents EPA MCL/RSL for tapwater (Nov. 2015, TR=$1x10^{-6}$, HQ=0.1). Results in **bold** exceed the screening level. ^Not detected in groundwater, value represents ½ detection limit.

Table 4.3.2d Representative Concentrations of COCs in Soil Vapor

Analyte	Representative Concentration	Sample ID	EPA RSL*	Attenuation Factor*	VISL*
Benzene	**3.8**	SS11	0.0016	0.03	**0.053**
1,1-DCA	**2.9**	SS11	0.0077	0.03	**0.004**
DCPD	**63**	SS9	0.00013	0.03	**0.257**
Ethylbenzene	**510**	SS9	0.0049	0.03	**0.163**
Naphthalene	**0.21**	SS8	0.00036	0.03	**0.012**
Styrene	0.012	SS5	0.44	0.03	**14.7**
TCE	**0.17**	SS8	0.00088	0.03	**0.029**
1,2,3-TMB**	**100**	SS9	0.0022	0.03	**0.073**
1,2,4-TMB	**100**	SS9	0.0031	0.03	**0.103**
1,3,5-TMB	29	SS8	NE	0.03	NE
Xylenes	**576**	SS9	0.044	0.03	**4.4**

Units in milligrams per cubic meter (mg/m^3). DCA – Dichloroethane. DCPD – Dicyclopentadiene. TCE – Trichloroethene. TMB – Trimethylbenzene. *Vapor Intrusion Screening Level, represents EPA RSL for Industrial Air (Nov. 2015, TR=$1x10^{-6}$, HQ=0.1) with an applied slab attenuation factor of 0.03. Results in **bold** exceed the VISL. NE – no EPA RSL established. **Value equal to 1,2,4-TMB

Table 4.3.2e Representative Concentrations of COCs in Indoor Air

Analyte	Representative Concentration	Sample ID	EPA RSL*
Benzene	**0.0066**	Control Room (CR-1)	**0.0016**
1,1-DCA	0.004^	½ Detection Limit	**0.0077**
DCPD	**0.12**	Maintenance Shop (MS-1)	**0.00013**
Ethylbenzene	0.004	Maintenance Shop (MS-1)	**0.0049**
Naphthalene	**0.0005**	Control Room (CR-1)	**0.00036**
TCE	0.0005^	½ Detection Limit	**0.00088**
1,2,3-TMB**	**0.004**	Maintenance Shop (MS-1)	**0.0022**
1,2,4-TMB	**0.004**	Maintenance Shop (MS-1)	**0.0031**
Xylenes	**0.0178**	Maintenance Shop (MS-1)	**0.044**

Units in milligrams per cubic meter (mg/m^3). DCA – Dichloroethane. DCPD – Dicyclopentadiene. TCE – Trichloroethene. TMB – Trimethylbenzene. *EPA RSL for Industrial Air (Nov. 2015, TR=$1x10^{-6}$, HQ=0.1). Results in **bold** exceed the RSL. ^Not detected in indoor air, value represents ½ detection limit. **Value equal to 1,2,4-TMB.

4.3.3 Toxicological Properties

Default toxicological values were used for the RM-2 evaluation. For outdated toxicological properties or toxicological properties not provided in the RAM software, values were obtained from sources in the order listed in Section 3.7.2 of the ARBCA Guidance Manual. Inhalation

values (SFi and RfDi) were calculated by utilizing the conversion equations provided in Section 3.7.2 of the ARBCA Guidance Manual.

4.3.4 Physical and Chemical Properties

Default physical and chemical properties were used for the RM-2 evaluation.

4.3.5 Exposure Factors

With the exception of the soil ingestion rate for the commercial worker, default exposure factors were utilized in the RM-2 evaluation. The soil ingestion rate for the commercial worker was set at 50 milligrams per day based on published information available from the EPA[1].

4.3.6 Fate and Transport Parameters

Site-specific fate and transport parameters were utilized in the RM-2 Evaluation. Default values were used for parameters not described herein and are shown in Appendix C. The thickness of the capillary fringe was estimated based on published data regarding average capillary fringe thicknesses in very fine sands (100 cm)[2]. The dimension of the soil source area parallel to wind direction was estimated based on the greatest extent of soil contamination above screening levels encountered during the August 2015 soil assessment in the prevailing wind direction (7,750 cm). The dimensions of the groundwater source area was estimated based on the greatest extent of groundwater contamination above screening levels encountered during the June 2015 groundwater sampling event (33,000 cm x 38,000 cm). Average depth to water at the site was based on groundwater elevations recorded during the June 2015 monitoring event (36.83 ft; 1,122.66 cm). The groundwater infiltration rate was estimated at 10% of average annual rainfall for Tuscaloosa, Alabama (13.97 cm). Average wind speed at the site was based on average annual wind data for Birmingham, Alabama available from the National Oceanic and Atmospheric Association (375 cm/s). Additional fate and transport parameters utilized in the RM-2 Evaluation are discussed below.

<u>Physical Soil Properties</u>
Physical properties of site soils were available from the United States Department of Agriculture (USDA) Soil Survey for Tuscaloosa County. The predominant soil type beneath the site is the Smithdale fine sandy loam which consists of well drained, sandy loam and sandy clay loam. The physical properties for this soil type are presented in the table below.

---

[1] Exposure Factors Handbook. USEPA Office of Research and Development, National Center for Environmental Assessment. EPA/600/R-09/052F. September 2011.

[2] Fetter, C.W. "Applied Hydrogeology." New Jersey: Prentice Hall, 1994.

Table 4.3.6 – Physical Soil Properties

Dry Bulk Density	Water Content	Total Porosity	FOC
1.256 g/cm^3	0.20	0.4 cm^3/cm^3-soil	0.0116 g-C/g-soil

g – grams; cm^3 – cubic centimeters; C – carbon; FOC – Fractional organic content

Dry bulk density was extrapolated from the moist bulk density and average water content for Smithdale soils. Total porosity was estimated from published values for clayey sands[3] The fractional organic content was calculated by applying a conversion factor of 1.724[4] to the reported percentage organic matter in shallow Smithdale soils.

As published data was not available for Smithdale soils at depths greater than 85 inches, physical soil properties in the saturated zone were assumed to be equivalent to those in the vadose zone.

<u>Hydraulic Conductivity</u>
Hydraulic conductivity (K) for the site was estimated based on published data regarding average hydraulic conductivity values for silty sands (1 x 10^{-4} cm/s)[5]. The hydraulic gradient for the shallow groundwater at the site was calculated to be approximately 0.033 ft/ft, based on the water table elevations measured at the site on June 29, 2015 (MW-12 to MW-3). Based on the estimated hydraulic conductivity and the measured groundwater gradient, the shallow groundwater flow velocity (Darcy Velocity) for the site is calculated as follows:

Equation: $V = K \times dh/dl$
Where: V = Groundwater Flow (Darcy) Velocity
K = Hydraulic Conductivity
dh/dl = Groundwater Gradient

$V = (.0001\ cm/s)(0.033) = 3.3 \times 10^{-6}\ cm/s =$ **104.1 cm/year**

4.3.7 Models and Equations

The models and equations recommended in Appendix C of the most recent edition of the ARBCA Guidance Manual and incorporated into the RAM ARBCA Computational Software were used for the RM-2 evaluation. These include the Domenico Model and the Johnson and Ettinger Model.

[3] Freeze, R.A. and Cherry, J.A. "Groundwater." New Jersey: Prentice Hall, 1979.
[4] Schumacher, Brian A. 2002. "Methods for the Determination of Total Organic Carbon (TOC) in Soils and Sediments." USEPA Ecological Risk Assessment Support Center.
[5] Fetter, C.W. "Applied Hydrogeology." New Jersey: Prentice Hall, 1994.

4.3.8 Cumulative Risk Evaluation

The cumulative risks calculated by the RAM software are summarized in Tables 4.3.8a and 4.3.8b and are discussed below. The RAM model output for the risk evaluation is included in Appendix C. The cumulative risk calculation in the RAM model output does not account for the indoor inhalation risks that are calculated from indoor air data. As such, the risks calculated from indoor air were manually added to the cumulative risks for other complete pathways in the tables below.

Table 4.3.8a – Individual Excess Lifetime Cancer Risk

Receptor	Indoor Air	Soil^	Sum of IELCR*
Commercial Worker	**1.48×10^{-5}**	1.47×10^{-6}	**1.63×10^{-5}**
Construction Worker	NA	4.81×10^{-7}	4.81×10^{-7}

IELCR – Individual Excess Lifetime Cancer Risk. *Allowable IELCR is 1×10^{-5}. **Bold** – exceeds allowable risk. ^represents exposure routes for surficial soil for the commercial worker and exposure routes for soil up to the depth of construction for the construction worker.

Table 4.3.8b – Hazard Index

Receptor	Indoor Air	Soil^	Sum of HQ (HI)*
Commercial Worker	**207.19**	0.0222	**207.21**
Construction Worker	NA	0.599	0.599

HI – Hazard Index. *Allowable HI is 1.0. **Bold** – exceeds allowable risk. ^represents exposure routes for surficial soil for the commercial worker and exposure routes for soil up to the depth of construction for the construction worker.

The Individual Excess Lifetime Cancer Risk (IELCR) and the Hazard Index (HI) exceed allowable risks for the commercial worker. The cumulative risks are below the allowable risk for the IELCR and the HI for the construction worker. The IELCR and the HI are the sum of the risks for each complete pathway as calculated and provided in Appendix C.

5.0 PROPOSED CORRECTIVE ACTION

A review of the RAM software output in Appendix C reveals that the calculated cumulative risks from COCs present at the subject site are above allowable levels for the commercial worker specifically due to the indoor vapor inhalation pathway. In order to mitigate potential risk to the commercial worker and given that COCs above screening levels are to remain in soil, groundwater, and soil vapor at the site, Terracon recommends corrective action to include the implementation of institutional and engineering controls. Details regarding proposed corrective action measures at the site are outlined below.

5.1 Vapor Intrusion Mitigation

Cumulative risks to the on-site commercial worker were calculated to be above allowable levels due to the indoor vapor inhalation pathway. As such, engineering controls are proposed beneath enclosed structures that are occupied by commercial workers for an average of at least ten hours per week. This is a conservative approach considering that the risks to the commercial worker calculated by the RAM software are based on an exposure rate of ten hours per day, 250 days per year for 25 years. The buildings where engineering controls are proposed include the office building, the control room, and the maintenance shop (Exhibit 2). The engineering controls implemented at the site will include either installation of a vapor barrier, a sub-slab depressurization system, or a combination of both methods as described in further detail below.

5.1.1 Vapor Barrier

A chemically resistant, roll-on epoxy-based or spray-applied composite vapor barrier system will be installed atop the existing slab of the aforementioned buildings and completely sealed to foundation walls and around utility penetrations. The most appropriate option for each building will be selected based on condition of the existing slabs and consideration of installation procedures as they relate to site operations. The roll-on epoxy-based vapor barrier will consist of a minimum 26-mil thick system, containing two 10-mil coats of chemically resistant epoxy atop a 6-mil coat of primer. Once cured, the epoxy-based barrier is resistant to surface damage and can withstand forklift traffic and other impacts from heavy machinery. The spray-applied composite vapor barrier will consist of a minimum 96-mil thick system, containing two 18-mil chemically resistant high-density polyethylene (HDPE) sheets encompassing a 60-mil spray-applied copolymer modified asphaltic membrane. A new three-inch concrete slab will be poured atop the spray-applied composite vapor barrier following installation.

5.1.2 Sub-slab Depressurization

In the event that one of the aforementioned vapor barrier systems cannot be installed due to condition of the slab or complexity of installation procedures as they relate to site operations, an active sub-slab depressurization system will be installed to provide a preferential pathway for vapor emissions from beneath the slab to outside air. The system will create negative pressure beneath the slab through the installation of perforated sub-slab piping, an electric fan(s), and riser piping to the roof of the building. Prior to installation, pressure field diagnostics will be performed in order to evaluate the transmissivity of the sub-slab material and determine the design specifications necessary to achieve depressurization goals.

5.2 Class 1 Environmental Covenant

A Statutory Warranty Deed was filed with the Tuscaloosa County Judge of Probate in October 2003 that included multiple use restrictions on the property (Appendix E). Current use restrictions of note for the site include:

- No part of the Property shall be used for any use or purpose whatsoever other than industrial purposes and uses or wholesale commercial purposes limited to the bulk sale of industrial products manufactured or repackaged on the Property;

- No water or groundwater on, from or under the Property other than piped water from the local public water authority shall be used for any purpose whatsoever;

- No part of the Property may be used for residential, recreational, governmental, educational, religious, child care, retail, or commercial (except as set forth above) or other public use;

- The former wastewater impoundments shall not be disturbed or excavated and no soil shall be removed from these areas; and the other areas on the Property as shown on and described in surveys attached hereto (see Areas A-G on Exhibit 2) shall not be disturbed or excavated, except for the sole purpose of installing a concrete or asphalt cover, and no soil may be removed from these areas at any point thereafter;

In order to prevent on-site exposure to COCs via the inhalation pathway, Terracon recommends recording an environmental covenant with an additional deed restriction as follows:

- If appropriate testing specific to the structure indicates there is an unacceptable vapor intrusion risk, a chemically resistant vapor barrier system and/or active sub-slab depressurization system shall be installed beneath any enclosed structures on the Property occupied by workers for a minimum of ten hours per week.

A draft environmental covenant with the above deed restriction will be provided to the Department for approval prior to filing with the Tuscaloosa County Judge of Probate.

6.0 FUTURE LAND USE

This Voluntary Cleanup Plan has been prepared with the ultimate end use of the property in mind. Current plans call for continued use as a biodiesel production facility. Given the proposed future use of the site and the corrective action activities covered in this Voluntary Cleanup Plan, the potential for exposure of future workers to the COCs currently in soil, groundwater, and soil vapor will be mitigated. Mitigating the current and realistic exposure

pathway to future on-site receptors will result in an overall environmental benefit to the surrounding community.

7.0 CONCLUSIONS AND RECOMMENDATIONS

Impact to soil, groundwater, and soil vapor has occurred at various locations beneath the site. Cumulative risks calculated for the site are above allowable levels for the commercial worker due to the vapor inhalation pathway. Based on calculated risks and the presence of COCs in soil, groundwater, and soil vapor beneath the site at concentrations above applicable screening levels, Terracon recommends recording an environmental covenant with additional deed restrictions. Proposed deed restrictions for the site will require the installation of a chemically resistant vapor barrier system and/or active sub-slab depressurization system beneath any enclosed, occupied structures on the Property if appropriate testing specific to the structure indicates there is an unacceptable vapor intrusion risk as outlined in Sections 5.1 and 5.2 of this Voluntary Cleanup Plan.

If the scope of work outlined herein meets the requirements of ADEM, Terracon will submit a draft environmental covenant to the Department for approval. Following approval, a Certification of Compliance along with a copy of the filed Class 1 Environmental Covenant will be submitted to the Department. Upon submittal of the Certification of Compliance, Terracon requests that ADEM consider issuing a Conditional Letter of Concurrence for the site.

With regard to the proposed schedule for implementation, Terracon proposes to initiate the corrective action activities immediately upon approval of this Cleanup Plan by ADEM. Should the 30-day public notice period elicit comments, those comments will be addressed as specified in ADEM Administrative Code R. 335-15-6-.02 *Public Participation*.

TABLES

Table 1
Summary of Groundwater Elevation Data
Veros Energy
12982 Cherokee Bend Drive
Moundville, Tuscaloosa County, Alabama

Well ID	Date	Top of Casing Elevation (ft amsl)	Depth To Water (ft btoc)	Groundwater Elevation (ft amsl)	Well Depth (ft amsl)
MW-3	06/29/15	150.06	37.14	112.92	52.77
	02/18/16		36.70	113.36	
MW-4	06/29/15	156.57	44.17	112.40	52.84
	02/18/16		43.46	113.11	
MW-5D	06/29/15	155.12	52.24	102.88	86.88
	02/18/16		46.10	109.02	
MW-6	06/29/15	171.26	Dry	ND	12.75
	02/18/16		Dry	ND	
MW-8	06/29/15	182.51	39.70	142.81	52.81
	02/18/16		Obstructed		
MW-9	06/29/15	190.19	43.68	146.51	62.81
	02/18/16		44.49	145.70	
MW-11	06/29/15	183.17	28.63	154.54	40.39
	02/18/16		26.90	156.27	
MW-12	06/29/15	179.50	27.11	152.39	36.71
	02/18/16		27.73	151.77	
MW-15	06/29/15	174.63	21.99	152.64	38.08
	02/18/16		22.40	152.23	

ft amsl - feet above mean sea level

Average DTW
36.16 Feet
1102.23808 Centimeters

Table 2
Summary of Detected Constituents in Groundwater
Moundville Biodiesel Facility
12982 Cherokee Bend
Moundville, Tuscaloosa County, Alabama

Sample ID	Collection Date Includes initial sampling data and five most recent events for each well	Metals		Volatile Organic Compounds (VOCs)																Semi Volatile Organic Compounds (SVOCs)			
		Barium, Dissolved	Lead, Dissolved	Benzene	Dicylcopentadiene	Ethylbenzene	Isopropylbenzene	Naphthalene	n-Butylbenzne	n-Propylbenzene	p-Isopropyltoluene	sec-Butylbenzene	Styrene	Toluene	1,2,3-Trimethylbenzene	1,2,4-Trimethylbenzene	1,3,5-Trimethylbenzene	Total Xylenes	Bis(2Chloroisoporopyl) ether	Isosafrole	2-Methynapthalene	Naphthalene
MW-3	10/29/85[1]	NA	NA	<0.005	NA	<0.005	NA	<0.005	NA	<0.005	NA	NA	<0.005	<0.005	NA	NA	<0.005	<0.01	NA	NA	NA	NA
	11/10/85[1]	NA	NA	<0.005	NA	<0.005	NA	<0.005	NA	<0.005	NA	NA	<0.005	<0.005	NA	NA	<0.005	<0.01	NA	NA	NA	NA
	12/1/04[2]	NA	NA	<0.005	<0.005	<0.005	NA	<0.005	NA	<0.005	NA	NA	<0.005	<0.005	NA	<0.005	<0.005	<0.01	NA	NA	NA	NA
	5/20/05[2]	NA	NA	<0.005	<0.005	<0.005	NA	<0.005	NA	<0.005	NA	NA	<0.005	<0.005	NA	<0.005	<0.005	<0.01	NA	NA	NA	NA
	11/22/05[2]	NA	NA	<0.005	<0.005	<0.005	NA	<0.005	NA	<0.005	NA	NA	<0.005	<0.005	NA	<0.005	<0.005	<0.01	NA	NA	NA	NA
	6/7/06[2]	NA	NA	<0.005	<0.005	<0.005	NA	<0.005	NA	<0.005	NA	NA	<0.005	<0.005	NA	<0.005	<0.005	<0.01	NA	NA	NA	NA
	6/29/15	**0.141**	**0.00695**	<0.001	**0.00465**	<0.001	<0.001	**0.0042**	<0.001	<0.001	<0.001	<0.001	<0.001	<0.005	<0.001	<0.001	<0.001	<0.003	<0.01	<0.01	<0.001	**0.00416**
	2/18/16	NA	NA	<0.001	**0.00351**	<0.001	<0.001	<0.005	<0.001	<0.001	<0.001	<0.001	<0.001	<0.005	<0.001	<0.001	<0.001	<0.003	NA	NA	NA	NA
MW-4	10/29/85[1]	NA	NA	<0.005	NA	<0.005	NA	<0.005	NA	<0.005	NA	NA	<0.005	<0.005	NA	NA	NA	<0.01	NA	NA	NA	NA
	11/10/85[1]	NA	NA	<0.005	<0.005	<0.005	NA	<0.005	NA	<0.005	NA	NA	<0.005	<0.005	NA	NA	NA	<0.01	NA	NA	NA	NA
	12/1/04[2]	NA	NA	<0.005	0.012	<0.005	NA	<0.005	NA	<0.005	NA	NA	<0.005	<0.005	NA	<0.005	<0.005	<0.01	NA	NA	NA	NA
	5/20/05[2]	NA	NA	<0.005	<0.005	<0.005	NA	<0.005	NA	<0.005	NA	NA	<0.005	<0.005	NA	<0.005	<0.005	<0.01	NA	NA	NA	NA
	11/22/05[2]	NA	NA	<0.005	0.007	<0.005	NA	<0.005	NA	<0.005	NA	NA	<0.005	<0.005	NA	<0.005	<0.005	<0.01	NA	NA	NA	NA
	6/7/06[2]	NA	NA	<0.005	0.008	<0.005	NA	<0.005	NA	<0.005	NA	NA	<0.005	<0.005	NA	<0.005	<0.005	<0.01	NA	NA	NA	NA
	6/29/15	**0.1180**	<0.005	**0.0011**	**0.0139**	<0.001	<0.001	<0.001	<0.001	<0.001	<0.001	<0.001	<0.001	<0.005	<0.001	<0.001	<0.001	<0.003	<0.01	<0.01	<0.001	<0.001
	2/18/16	NA	NA	**0.00149**	**0.0179**	**0.00104**	<0.001	**0.0182**	<0.001	<0.001	<0.001	<0.001	<0.001	<0.005	**0.00417**	<0.001	<0.001	**0.00507**	NA	NA	NA	NA
MW-5D	6/19/97[2]	NA	NA	**0.076**	**0.0282**	**0.0674**	NA	**0.341**	NA	**0.0263**	NA	NA	<0.025	**0.0336**	NA	**0.17**	**0.0543**	**0.316**	NA	NA	NA	NA
	12/1/04[2]	NA	NA	**0.008**	<0.005	**0.014**	NA	**0.068**	NA	<0.005	NA	NA	<0.005	<0.005	NA	**0.029**	<0.005	**0.027**	NA	NA	NA	NA
	5/20/05[2]	NA	NA	**0.007**	<0.005	**0.014**	NA	**0.061**	NA	<0.005	NA	NA	<0.005	<0.005	NA	**0.014**	<0.005	**0.013**	NA	NA	NA	NA
	11/22/05[2]	NA	NA	<0.005	<0.005	<0.005	NA	**0.017**	NA	<0.005	NA	NA	<0.005	<0.005	NA	<0.005	<0.005	<0.005	NA	NA	NA	NA
	6/7/06[2]	NA	NA	0.005	<0.005	**0.01**	NA	**0.032**	NA	<0.005	NA	NA	<0.005	<0.005	NA	**0.015**	<0.005	**0.011**	NA	NA	NA	NA
	6/29/15	**0.181**	**0.00903**	**0.00135**	<0.001	**0.00427**	<0.001	**0.0112**	<0.001	**0.00124**	<0.001	<0.001	<0.001	<0.005	**0.00276**	**0.00471**	<0.005	**0.00632**	<0.01	<0.01	<0.001	**0.0113**
	2/18/16	NA	NA	**0.00137**	**0.0015**	**0.0066**	<0.001	**0.0226**	<0.001	**0.00196**	<0.001	<0.001	<0.001	<0.005	**0.00419**	**0.0071**	**0.00155**	**0.00867**	NA	NA	NA	NA
	EPA MCL/ RSL	**2**	**0.015**	**0.005**	**0.000063**	**0.7**	**0.045**	**0.0002**	**0.1**	**0.066**	**NE**	**0.2**	**0.1**	**1**	**0.001**	**0.0015**	**0.012**	**10**	**NE**	**NE**	**0.0036**	**0.0002**

Bold value indicates a laboratory detection.
Data presented in milligrams per Liter (parts per million).
EPA MCL/RSL - Environmental Protection Agency Maximum Contaminant Level/Regional Screening Level (Nov. 2015, HQ = 0.1)
Highlighted values indicate detected concentrations greater than the applicable screening level.
NE - not established; no EPA MCL/RSL available
NA - not applicable/not analyzed

[1] CH2MHill (1986)
[2] TTL, Inc. groundwater monitoring
[3] ARCADIS Geraghty & Miller (1998,1999)

Table 2
Summary of Detected Constituents in Groundwater
Moundville Biodiesel Facility
12982 Cherokee Bend
Moundville, Tuscaloosa County, Alabama

Sample ID	Collection Date Includes initial sampling data and five most recent events for each well	Metals		Volatile Organic Compounds (VOCs)																Semi Volatile Organic Compounds (SVOCs)			
		Barium, Dissolved	Lead, Dissolved	Benzene	Dicylcopentadiene	Ethylbenzene	Isopropylbenzene	Naphthalene	n-Butylbenzne	n-Propylbenzene	p-Isopropyltoluene	sec-Butylbenzene	Styrene	Toluene	1,2,3-Trimethylbenzene	1,2,4-Trimethylbenzene	1,3,5-Trimethylbenzene	Total Xylenes	Bis(2Chloroisoporopyl) ether	Isosafrole	2-Methynapthalene	Naphthalene
MW-8	10/29/85[1]	NA	NA	**0.43**	NA	<0.005	NA	<0.005	NA	<0.005	NA	NA	**0.064**	**0.065**	NA	NA	NA	**0.91**	NA	NA	NA	NA
	11/10/85[1]	NA	NA	**0.6**	**0.079**	**0.12**	NA	**0.55**	NA	**0.046**	NA	NA	**0.17**	**0.11**	NA	NA	NA	**1**	NA	NA	NA	NA
	6/12/98[2]	NA	NA	<0.005	<0.005	<0.005	NA	<0.005	NA	<0.005	NA	NA	<0.005	<0.005	NA	<0.005	<0.005	<0.005	NA	NA	NA	NA
	11/20/98[3]	NA	NA	**0.0117**	**0.0178**	<0.005	NA	**0.0746**	NA	<0.005	NA	NA	<0.005	<0.005	NA	**0.0163**	**0.0051**	**0.027**	NA	NA	NA	NA
	8/31/99[2]	NA	NA	<0.005	**0.0103**	<0.005	NA	**0.034**	NA	<0.005	NA	NA	<0.005	<0.005	NA	<0.005	<0.005	0.005	NA	NA	NA	NA
	4/20/00[2]	NA	NA	<0.005	<0.005	<0.005	NA	<0.005	NA	<0.005	NA	NA	<0.005	<0.005	NA	<0.005	<0.005	<0.005	NA	NA	NA	NA
	6/29/15	**0.0215**	<0.005	**0.0236**	**0.172**	**0.0164**	**0.00413**	**0.264**	**0.002**	**0.0115**	<0.001	<0.001	<0.001	<0.005	**0.0137**	**0.0213**	**0.00124**	**0.0248**	**0.0162**	**0.0239**	**0.00276**	**0.145**
MW-9	10/29/85[1]	NA	NA	**0.016**	NA	<0.005	NA	NA	NA	<0.005	NA	NA	<0.005	<0.005	NA	NA	NA	**0.045**	NA	NA	NA	NA
	11/10/85[1]	NA	NA	**0.018**	<0.005	<0.005	NA	**0.037**	NA	**0.005**	NA	NA	<0.005	<0.005	NA	NA	NA	**0.048**	NA	NA	NA	NA
	11/20/98[3]	NA	NA	<0.005	<0.005	<0.005	NA	<0.005	NA	<0.005	NA	NA	<0.005	<0.005	NA	<0.005	<0.005	<0.005	NA	NA	NA	NA
	5/18/99[3]	NA	NA	<0.002	<0.01	<0.002	NA	<0.01	NA	<0.01	NA	NA	<0.005	<0.002	NA	<0.01	<0.01	<0.005	NA	NA	NA	NA
	8/31/99[2]	NA	NA	<0.005	<0.005	<0.005	NA	<0.005	NA	<0.005	NA	NA	<0.005	<0.005	NA	<0.005	<0.005	<0.005	NA	NA	NA	NA
	4/20/00[2]	NA	NA	**0.0119**	<0.005	<0.005	NA	**0.0058**	NA	<0.005	NA	NA	<0.005	<0.005	NA	<0.005	<0.005	<0.005	NA	NA	NA	NA
	6/29/15	**0.0243**	**0.00604**	<0.001	<0.001	<0.001	<0.001	<0.001	<0.001	<0.001	<0.001	<0.001	<0.001	<0.005	<0.001	<0.001	<0.001	<0.003	<0.01	<0.01	<0.001	<0.001
	2/18/16	NA	NA	**0.00503**	<0.001	<0.001	<0.001	<0.005	<0.001	<0.001	<0.001	<0.001	<0.001	<0.005	<0.001	<0.001	<0.001	<0.003	NA	NA	NA	NA
MW-11	10/29/85[1]	NA	NA	**0.20**	NA	**0.39**	NA	NA	NA	**0.18**	NA	NA	**0.25**	**0.10**	NA	NA	NA	**2.40**	NA	NA	NA	NA
	11/10/85[1]	NA	NA	**0.16**	**0.36**	**0.31**	NA	**0.76**	NA	**0.26**	NA	NA	**0.21**	**0.074**	NA	NA	NA	**1.9**	NA	NA	NA	NA
	12/1/04[2]	NA	NA	<0.05	**0.229**	**0.375**	NA	**1.92**	NA	**0.225**	NA	NA	**0.115**	<0.05	NA	**2.12**	**0.646**	**1.796**	NA	NA	NA	NA
	5/20/05[2]	NA	NA	<0.05	**0.224**	**0.449**	NA	**2.55**	NA	**0.225**	NA	NA	**0.258**	<0.05	NA	**2.59**	**0.649**	**2.39**	NA	NA	NA	NA
	11/22/05[2]	NA	NA	<0.05	**0.182**	**0.261**	NA	**1.26**	NA	**0.205**	NA	NA	**0.179**	<0.05	NA	**1.84**	**0.516**	**1.601**	NA	NA	NA	NA
	6/7/06[2]	NA	NA	<0.025	**0.193**	**0.244**	NA	**1.19**	NA	**0.141**	NA	NA	**0.232**	**0.04**	NA	**1.73**	**0.663**	**2.095**	NA	NA	NA	NA
	6/29/15	**0.0888**	<0.005	**0.0343**	**0.166**	**0.171**	<0.001	**0.692**	**0.00276**	**0.0607**	<0.001	**0.00137**	**0.126**	**0.0637**	**0.177**	**0.448**	**0.0765**	**0.616**	<0.01	**0.0709**	**0.00301**	**0.543**
	2/18/16	NA	NA	**0.00886**	**0.0346**	**0.0263**	**0.00836**	**0.192**	**0.00951**	**0.029**	<0.001	**0.00312**	**0.0111**	<0.05	**0.0568**	**0.067**	**0.00721**	**0.0958**	NA	NA	NA	NA
	EPA MCL/ RSL	**2**	**0.015**	**0.005**	**0.000063**	**0.7**	**0.045**	**0.0002**	**0.1**	**0.066**	**NE**	**0.2**	**0.1**	**1**	**0.001**	**0.0015**	**0.012**	**10**	**NE**	**NE**	**0.0036**	**0.0002**

Bold value indicates a laboratory detection.
Data presented in milligrams per Liter (parts per million).
EPA MCL/RSL - Environmental Protection Agency Maximum Contaminant Level/Regional Screening Level (Nov. 2015, HQ = 0.1)
Highlighted values indicate detected concentrations greater than the applicable screening level.
NE - not established; no EPA MCL/RSL available
NA - not applicable/not analyzed

[1] CH2MHill (1986)
[2] TTL, Inc. groundwater monitoring
[3] ARCADIS Geraghty & Miller (1998,1999)

Table 2
Summary of Detected Constituents in Groundwater
Moundville Biodiesel Facility
12982 Cherokee Bend
Moundville, Tuscaloosa County, Alabama

Sample ID	Collection Date Includes initial sampling data and five most recent events for each well	Metals			Volatile Organic Compounds (VOCs)															Semi Volatile Organic Compounds (SVOCs)			
		Barium, Dissolved	Lead, Dissolved		Benzene	Dicylcopentadiene	Ethylbenzene	Isopropylbenzene	Naphthalene	n-Butylbenzne	n-Propylbenzene	p-Isopropyltoluene	sec-Butylbenzene	Styrene	Toluene	1,2,3-Trimethylbenzene	1,2,4-Trimethylbenzene	1,3,5-Trimethylbenzene	Total Xylenes	Bis(2Chloroisoporopyl) ether	Isosafrole	2-Methynapthalene	Naphthalene
MW-12	10/29/85[1]	NA	NA		<0.05	NA	**0.076**	NA	NA	NA	<0.005	NA	NA	**0.1**	**0.033**	NA	NA	NA	**0.65**	NA	NA	NA	NA
	11/10/85[1]	NA	NA		<0.005	<0.005	**0.076**	NA	**0.18**	NA	**0.049**	NA	NA	**0.082**	**0.029**	NA	NA	NA	**0.41**	NA	NA	NA	NA
	11/20/98[3]	NA	NA		**0.634**	**0.0834**	**0.253**	NA	**1.13**	NA	**0.0737**	NA	NA	**0.129**	**0.0767**	NA	**0.0601**	**0.104**	**0.853**	NA	NA	NA	NA
	5/18/99[3]	NA	NA		**0.017**	**0.018**	**0.066**	NA	**0.18**	NA	**0.027**	NA	NA	**0.04**	**0.019**	NA	**0.15**	**0.029**	**0.25**	NA	NA	NA	NA
	8/31/99[2]	NA	NA		**0.0548**	**0.0625**	**0.209**	NA	**1.04**	NA	**0.0653**	NA	NA	**0.136**	**0.0666**	NA	**0.568**	**0.112**	**0.883**	NA	NA	NA	NA
	4/20/00[2]	NA	NA		<0.05	**0.0502**	**0.112**	NA	**0.744**	NA	<0.05	NA	NA	**0.0855**	<0.05	NA	**0.308**	<0.05	**0.482**	NA	NA	NA	NA
	6/29/15	**0.141**	**0.00683**		**0.00893**	**0.0521**	**0.0778**	**0.0106**	**0.41**	**0.00924**	**0.047**	**0.00287**	**0.00336**	**0.0163**	<0.005	**0.113**	**0.16**	**0.0228**	**0.239**	<0.01	**0.0177**	**0.00341**	**0.27**
	2/18/16	NA	NA		**0.0359**	**0.249**	**0.173**	**0.0209**	**0.911**	**0.0054**	**0.0903**	**0.00512**	**0.00219**	**0.15**	**0.0567**	**0.246**	**0.58**	**0.0865**	**0.582**	NA	NA	NA	NA
MW-15	5/18/99[3]	NA	NA		<0.002	<0.01	<0.002	NA	<0.01	NA	<0.01	NA	NA	<0.005	<0.002	NA	<0.01	<0.01	<0.005	NA	NA	NA	<0.01
	4/20/00[2]	NA	NA		<0.005	**0.0327**	<0.005	NA	**0.013**	NA	<0.005	NA	NA	<0.005	<0.005	NA	**0.0084**	<0.005	**0.0061**	NA	NA	NA	**0.013**
	6/29/15	**0.051**	**0.00556**		<0.001	**0.00175**	<0.001	<0.001	<0.001	<0.001	<0.001	<0.001	<0.001	<0.001	<0.005	**0.00113**	<0.001	<0.001	<0.003	<0.01	<0.01	<0.001	<0.001
	2/18/16	NA	NA		<0.001	**0.00262**	<0.001	<0.001	<0.005	<0.001	<0.001	<0.001	<0.001	<0.001	<0.005	<0.001	<0.001	<0.001	<0.003	NA	NA	NA	NA
	EPA MCL/ RSL	**2**	**0.015**		**0.005**	**0.000063**	**0.7**	**0.045**	**0.0002**	**0.1**	**0.066**	**NE**	**0.2**	**0.1**	**1**	**0.001**	**0.0015**	**0.012**	**10**	**NE**	**NE**	**0.0036**	**0.0002**

Bold value indicates a laboratory detection.
Data presented in milligrams per Liter (parts per million).
EPA MCL/RSL - Environmental Protection Agency Maximum Contaminant Level/Regional Screening Level (Nov. 2015, HQ = 0.1)
Highlighted values indicate detected concentrations greater than the applicable screening level.
NE - not established; no EPA MCL/RSL available
NA - not applicable/not analyzed

[1] CH2MHill (1986)
[2] TTL, Inc. groundwater monitoring
[3] ARCADIS Geraghty & Miller (1998,1999)

Table 3
Summary of Detected Constituents in Soil
Moundville Biodiesel Facility
12982 Cherokee Bend Drive
Moundville, Tuscaloosa County, Alabama

Lab Sample ID	L782221-01	L782221-02	L782221-03	L782221-04	L782221-05	L782221-06	L782221-07	L782221-08	L782221-09	L782221-10	L782221-11	L782221-12	
Client Sample ID	SB-1 0-1FT	SB-1 1-3FT	SB-2 0-1FT	SB-2 3-5FT	SB-3 0-1FT	SB-3 3-5FT	SB-4 0-1FT	SB-4 1-3FT	SB-5 0-1FT	SB-5 1-3FT	SB-6 0-1FT	SB-6 3-5FT	
Date Collected	8/11/2015	8/11/2015	8/11/2015	8/11/2015	8/11/2015	8/11/2015	8/11/2015	8/11/2015	8/11/2015	8/11/2015	8/11/2015	8/11/2015	
Analyte	Result	Result	Result	Result	Result	Result	Result	Result	Result	Result	Result	Result	EPA RSL ADEM PSV
Metals													
Arsenic	<2.25	NA	<2.15	NA	<2.29	NA	<2.16	NA	<2.2	NA	<2.34	NA	**3.0**
Barium	**7.5**	NA	**13.3**	NA	**39.2**	NA	**36.2**	NA	**29.8**	NA	**36**	NA	**2200**
Chromium*	**26.5**	NA	**3.53**	NA	**8.99**	NA	**39.2**	NA	**9.8**	NA	**14.3**	NA	**64**
Hexavalent Chromium	NA	NA	NA	NA	NA	NA	NA	NA	NA	NA	NA	NA	**6.3**
Lead	**214**	NA	**5.04**	NA	**5.77**	NA	**10**	NA	**8.29**	NA	**9.79**	NA	**800**
Mercury	**0.172**	NA	<0.0215	NA	**0.0258**	NA	**0.0597**	NA	<0.022	NA	**0.0587**	NA	**4.0**
Volatile Organic Compounds (VOCs)													
N-butylbenzene	**6.7**	**19.7**	<0.0268	**0.046**	<0.0286	<0.00595	**5.61**	**11**	<0.00551	**0.017**	<0.234	<0.575	**5800**
Sec-butylbenzene	**2.43**	**4.55**	<0.0268	<0.0291	<0.0286	<0.00595	**1.6**	**2.93**	<0.00551	**0.00822**	<0.234	<0.575	**12000**
Tert-butylbenzene	<0.563	**2.54**	<0.0268	<0.0291	<0.0286	<0.00595	**0.569**	**1.24**	<0.00551	<0.00571	<0.234	<0.575	**12000**
Dicyclopentadiene	**309**	**487**	**1.29**	**0.308**	**0.11**	<0.00595	**104**	**383**	**0.538**	**0.634**	**15.1**	**34.9**	**0.54**
Ethylbenzene	**27.3**	**37.8**	<0.0268	<0.0291	**0.129**	<0.00595	**23.4**	**51**	**0.0364**	**0.024**	**0.412**	**2.5**	**25**
Isopropylbenzene	**6.02**	**13.7**	<0.0268	<0.0291	<0.0286	<0.00595	**4.51**	**9.12**	**0.0129**	**0.0376**	<0.234	**1.1**	**990**
P-isopropyltoluene	**4.61**	**7.13**	<0.0268	**0.0361**	<0.0286	<0.00595	<0.541	<0.553	<0.00551	<0.00571	<0.234	**2.36**	**NE**
2-butanone (mek)	<5.63	<5.9	**0.414**	<0.291	<0.286	<0.0595	<5.41	<5.53	<0.0551	<0.0571	<2.34	<5.75	**19000**
Naphthalene	**295**	**446**	**0.272**	**0.334**	**0.207**	<0.0297	**248**	**358**	**0.15**	**0.456**	**4.55**	**18.2**	**17**
N-propylbenzene	**36.9**	**99.2**	**0.044**	**0.117**	**0.0679**	<0.00595	**21.6**	**43.6**	**0.0252**	**0.171**	**0.724**	**6.23**	**2400**
Styrene	**0.999**	**13.2**	<0.0268	<0.0291	<0.0286	<0.00595	<0.541	<0.553	<0.00551	<0.00571	<0.234	<0.575	**3500**
Toluene	<2.81	<2.95	<0.134	<0.145	<0.143	<0.0297	**2.78**	**6.35**	<0.0276	<0.0285	<1.17	<2.88	**4700**
1,2,3-trimethylbenzene	**167**	**259**	**0.233**	**0.469**	**0.139**	<0.00595	**68**	**198**	**0.0438**	**0.0149**	**2.32**	**20.9**	**21**
1,2,4-trimethylbenzene	**347**	**684**	**0.409**	**1.2**	**0.225**	<0.00595	**336**	**487**	**0.0529**	**0.0169**	**4.37**	**52.6**	**24**
1,3,5-trimethylbenzene	**147**	**252**	**0.233**	**0.529**	**0.173**	<0.00595	**63.2**	**177**	**0.0133**	<0.00571	**1.95**	**20.2**	**1200**
Xylenes, total	**174**	**289**	**0.0988**	**0.111**	**0.176**	<0.0178	**110**	**232**	**0.0296**	<0.0171	**0.778**	**7.28**	**280**
Semi Volatile Organic Compounds (SVOCs)													
Anthracene	<1.86	<0.195	<0.177	<0.0384	<0.189	<0.0393	<1.79	<1.83	<0.182	<0.188	<0.193	<0.038	**23000**
Naphthalene	<1.86	**85**	<0.177	**0.268**	<0.189	**0.199**	**578**	**464**	**2.03**	**3.32**	**11.4**	**5.34**	**17**
Phenanthrene*	<1.86	<0.195	<0.177	<0.0384	<0.189	<0.0393	<1.79	<1.83	<0.182	<0.188	<0.193	<0.038	**202**
Bis(2-ethylhexyl)phthalate	<18.7	<1.96	<1.79	<0.387	<1.9	<0.396	<18	<18.4	<1.84	<1.9	<1.95	<0.383	**160**

All results in milligrams per kilogram (mg/kg). Only detected constituents are shown.
Bold value indicates a laboratory detection.
Results compared to November 2015 EPA RSLs (HQ=0.1) for industrial soil unless otherwise specified
*EPA RSL not established - Results compared to ADEM PSVs for commercial soil
EPA RSL - Environmental Protection Agency Regional Screening Levels
ADEM PSV - Alabama Department of Environmental Management Preliminary Screening Value
Highlighted values indicate detected concentrations greater than the applicable screening level.
NA - not analyzed
NE - not established; no EPA RSL or ADEM PSV available

Table 3
Summary of Detected Constituents in Soil
Moundville Biodiesel Facility
12982 Cherokee Bend Drive
Moundville, Tuscaloosa County, Alabama

Lab Sample ID	L782221-13	L782221-14	L782221-15	L782221-16	L782221-17	L782221-18	L782221-19	L782221-20	L782221-21	L782221-22	L782221-23	L782221-24	
Client Sample ID	**SB-7 0-1FT**	**SB-7 1-3FT**	**SB-8 0-1FT**	**SB-8 3-5FT**	**SB-9 0-1FT**	**SB-9 3-5FT**	**SB-10 0-1FT**	**SB-10 3-5FT**	**SB-11 0-1FT**	**SB-11 3-5FT**	**SB-12 0-1FT**	**SB-12 3-5FT**	
Date Collected	**8/11/2015**	**8/11/2015**	**8/11/2015**	**8/11/2015**	**8/11/2015**	**8/11/2015**	**8/11/2015**	**8/11/2015**	**8/11/2015**	**8/11/2015**	**8/11/2015**	**8/11/2015**	
Analyte	**Result**	**Result**	**Result**	**Result**	**Result**	**Result**	**Result**	**Result**	**Result**	**Result**	**Result**	**Result**	**EPA RSL ADEM PSV**
Metals													
Arsenic	<2.22	NA	<2.2	NA	<2.2	NA	**2.46**	NA	<2.25	NA	**3.39**	NA	**3.0**
Barium	**24.8**	NA	**6.8**	NA	**9.36**	NA	**20**	NA	**33**	NA	**43.9**	NA	**2200**
Chromium*	**19.6**	NA	**4.36**	NA	**5.28**	NA	**8.03**	NA	**7.82**	NA	**9.1**	NA	**64**
Hexavalent Chromium	NA	NA	NA	NA	NA	NA	NA	NA	NA	NA	NA	NA	**6.3**
Lead	**8.81**	NA	**2.78**	NA	**6.04**	NA	**5.87**	NA	**8.04**	NA	**6.39**	NA	**800**
Mercury	**0.0269**	NA	<0.022	NA	<0.022	NA	**0.0457**	NA	**0.0485**	NA	<0.0208	NA	**4.0**
Volatile Organic Compounds (VOCs)													
N-butylbenzene	<0.00555	<0.00556	<0.0055	<0.00564	<0.00549	**15.3**	<0.00549	**0.106**	<0.0281	**0.0346**	<0.0052	<0.0056	**5800**
Sec-butylbenzene	<0.00555	<0.00556	<0.0055	<0.00564	<0.00549	**2.2**	<0.00549	<0.0285	<0.0281	<0.0279	<0.0052	<0.0056	**12000**
Tert-butylbenzene	<0.00555	<0.00556	<0.0055	<0.00564	<0.00549	<0.564	<0.00549	<0.0285	<0.0281	<0.0279	<0.0052	<0.0056	**12000**
Dicyclopentadiene	**0.061**	**0.00838**	<0.0055	**0.0222**	<0.00549	**362**	<0.00549	**0.318**	**0.316**	**0.958**	**0.0148**	<0.0056	**0.54**
Ethylbenzene	**0.00918**	<0.00556	<0.0055	<0.00564	<0.00549	**7.18**	<0.00549	**0.0563**	**0.0347**	**0.031**	<0.0052	<0.0056	**25**
Isopropylbenzene	<0.00555	<0.00556	<0.0055	<0.00564	<0.00549	**2.11**	<0.00549	<0.0285	<0.0281	<0.0279	<0.0052	<0.0056	**990**
P-isopropyltoluene	<0.00555	<0.00556	<0.0055	<0.00564	<0.00549	**12.5**	<0.00549	**0.0405**	<0.0281	<0.0279	<0.0052	<0.0056	**NE**
2-butanone (mek)	<0.0555	<0.0556	<0.055	<0.0564	<0.0549	<5.64	<0.0549	<0.285	<0.281	<0.279	<0.052	<0.056	**19000**
Naphthalene	**0.0878**	**0.0773**	<0.0275	**0.216**	<0.0275	**1860**	**0.0377**	**5.1**	**1.31**	**1.25**	<0.026	<0.028	**17**
N-propylbenzene	<0.00555	<0.00556	<0.0055	**0.00578**	<0.00549	**21.6**	<0.00549	**0.137**	**0.0979**	**0.121**	<0.0052	<0.0056	**2400**
Styrene	<0.00555	<0.00556	<0.0055	<0.00564	<0.00549	**2.68**	<0.00549	<0.0285	<0.0281	**0.0749**	<0.0052	<0.0056	**3500**
Toluene	<0.0277	<0.0278	<0.0275	<0.0282	<0.0275	<2.82	<0.0274	<0.142	<0.14	<0.14	<0.026	<0.028	**4700**
1,2,3-trimethylbenzene	**0.0106**	**0.0114**	<0.0055	**0.0412**	<0.00549	**353**	**0.0217**	**0.671**	**0.345**	**0.403**	**0.0073**	<0.0056	**21**
1,2,4-trimethylbenzene	**0.0189**	**0.0198**	<0.0055	**0.0735**	**0.00734**	**690**	**0.022**	**1.55**	**0.674**	**0.971**	<0.0052	<0.0056	**24**
1,3,5-trimethylbenzene	**0.0068**	<0.00556	<0.0055	**0.0187**	<0.00549	**72.3**	**0.00688**	**0.37**	**0.258**	**0.317**	<0.0052	<0.0056	**1200**
Xylenes, total	<0.0166	<0.0167	<0.0165	**0.0312**	<0.0165	**49.7**	<0.0165	**0.101**	**0.114**	**0.329**	<0.0156	<0.0168	**280**
Semi Volatile Organic Compounds (SVOCs)													
Anthracene	<0.0366	<0.0367	<0.0363	<0.0372	<0.362	<3.72	<0.362	<0.0376	<0.371	<0.0369	<0.0343	<0.037	**23000**
Naphthalene	**0.211**	**0.228**	<0.0363	**0.543**	**0.806**	**1530**	**0.239**	**13.9**	**2.75**	**1.29**	**0.0469**	<0.037	**17**
Phenanthrene*	<0.0366	<0.0367	<0.0363	<0.0372	<0.362	<3.72	<0.362	<0.0376	<0.371	<0.0369	<0.0343	<0.037	**202**
Bis(2-ethylhexyl)phthalate	<0.369	<0.37	<0.366	<0.376	<3.66	<37.5	<0.365	<0.379	<37.4	<0.372	**1.2**	<0.373	**160**

All results in milligrams per kilogram (mg/kg). Only detected constituents are shown.
Bold value indicates a laboratory detection.
Results compared to November 2015 EPA RSLs (HQ=0.1) for industrial soil unless otherwise specified
*EPA RSL not established - Results compared to ADEM PSVs for commercial soil
EPA RSL - Environmental Protection Agency Regional Screening Levels
ADEM PSV - Alabama Department of Environmental Management Preliminary Screening Value
Highlighted values indicate detected concentrations greater than the applicable screening level.
NA - not analyzed
NE - not established; no EPA RSL or ADEM PSV available

Table 3
Summary of Detected Constituents in Soil
Moundville Biodiesel Facility
12982 Cherokee Bend Drive
Moundville, Tuscaloosa County, Alabama

Lab Sample ID	L782656-01	L782656-02	L782656-03	L782656-04	L782656-05	L782656-06	L782656-07	L782656-08	L782656-09	L782656-10	L782656-11	L782656-12	
Client Sample ID	**SB-13 0-1 FT**	**SB-13 3-5 FT**	**SB-14 0-1 FT**	**SB-14 1-3 FT**	**SB-15 0-1 FT**	**SB-15 3-5 FT**	**SB-16 0-1 FT**	**SB-16 1-3 FT**	**HA-1 0-1 FT**	**HA-1 1-3 FT**	**HA-2 0-1 FT**	**HA-2 3-5 FT**	
Date Collected	**8/12/2015**	**8/12/2015**	**8/12/2015**	**8/12/2015**	**8/12/2015**	**8/12/2015**	**8/12/2015**	**8/12/2015**	**8/12/2015**	**8/12/2015**	**8/12/2015**	**8/12/2015**	
Analyte	**Result**	**Result**	**Result**	**Result**	**Result**	**Result**	**Result**	**Result**	**Result**	**Result**	**Result**	**Result**	**EPA RSL ADEM PSV**
Metals													
Arsenic	**5.15**	NA	**4.32**	NA	**5.57**	NA	**16.7**	NA	<2.27	NA	<2.45	NA	**3.0**
Barium	**18.5**	NA	**41.1**	NA	**30.8**	NA	**59.9**	NA	**30.5**	NA	**25.5**	NA	**2200**
Chromium*	**11.9**	NA	**8.64**	NA	**8.05**	NA	**134**	NA	**4.93**	NA	**4.83**	NA	**64**
Hexavalent Chromium	NA	NA	NA	NA	NA	NA	<1.11	NA	NA	NA	NA	NA	**6.3**
Lead	**5.35**	NA	**8.66**	NA	**5.5**	NA	**6.3**	NA	**4.77**	NA	**5.3**	NA	**800**
Mercury	<0.0213	NA	**0.0453**	NA	<0.0219	NA	<0.0221	NA	<0.0227	NA	<0.0245	NA	**4.0**
Volatile Organic Compounds (VOCs)													
N-butylbenzene	<0.00533	<0.00561	<0.00538	**0.0445**	<0.00547	<0.00561	<0.00553	<0.00562	<0.00568	<0.00545	<0.00613	**3.04**	**5800**
Sec-butylbenzene	<0.00533	<0.00561	<0.00538	<0.0274	<0.00547	<0.00561	<0.00553	<0.00562	<0.00568	<0.00545	<0.00613	**0.638**	**12000**
Tert-butylbenzene	<0.00533	<0.00561	<0.00538	<0.0274	<0.00547	<0.00561	<0.00553	<0.00562	<0.00568	<0.00545	<0.00613	<0.559	**12000**
Dicyclopentadiene	<0.00533	<0.00561	<0.00538	**0.386**	<0.00547	<0.00561	<0.00553	<0.00562	<0.00568	<0.00545	**0.209**	**74.6**	**0.54**
Ethylbenzene	<0.00533	<0.00561	<0.00538	<0.0274	<0.00547	<0.00561	<0.00553	<0.00562	<0.00568	<0.00545	<0.00613	**1.56**	**25**
Isopropylbenzene	<0.00533	<0.00561	<0.00538	<0.0274	<0.00547	<0.00561	<0.00553	<0.00562	<0.00568	<0.00545	<0.00613	**1.19**	**990**
P-isopropyltoluene	<0.00533	<0.00561	<0.00538	<0.0274	<0.00547	<0.00561	<0.00553	<0.00562	<0.00568	<0.00545	<0.00613	<0.559	**NE**
2-butanone (mek)	<0.0533	<0.0561	<0.0538	<0.274	<0.0547	<0.0561	<0.0553	<0.0562	<0.0568	<0.0545	<0.0613	<5.59	**19000**
Naphthalene	<0.0267	<0.0281	<0.0269	**1.96**	<0.0274	<0.0281	<0.0277	<0.0281	<0.0284	<0.0273	<0.0306	**383**	**17**
N-propylbenzene	<0.00533	<0.00561	<0.00538	**0.0393**	<0.00547	<0.00561	<0.00553	<0.00562	<0.00568	<0.00545	<0.00613	**8.21**	**2400**
Styrene	<0.00533	<0.00561	<0.00538	<0.0274	<0.00547	<0.00561	<0.00553	<0.00562	<0.00568	<0.00545	<0.00613	**0.664**	**3500**
Toluene	<0.0267	<0.0281	<0.0269	<0.137	<0.0274	<0.0281	<0.0277	<0.0281	<0.0284	<0.0273	**0.0704**	<2.8	**4700**
1,2,3-trimethylbenzene	<0.00533	<0.00561	<0.00538	**0.338**	<0.00547	<0.00561	<0.00553	<0.00562	<0.00568	<0.00545	<0.00613	**36.4**	**21**
1,2,4-trimethylbenzene	<0.00533	<0.00561	<0.00538	**0.588**	<0.00547	<0.00561	<0.00553	<0.00562	<0.00568	<0.00545	<0.00613	**71.7**	**24**
1,3,5-trimethylbenzene	<0.00533	<0.00561	<0.00538	**0.171**	<0.00547	<0.00561	<0.00553	<0.00562	<0.00568	<0.00545	<0.00613	**24.7**	**1200**
Xylenes, total	<0.016	<0.0168	<0.0161	<0.0822	<0.0164	<0.0168	<0.0166	<0.0169	<0.0171	<0.0164	<0.0184	**10.5**	**280**
Semi Volatile Organic Compounds (SVOCs)													
Anthracene	<0.0352	<0.037	<0.0355	<0.0362	<0.0361	<0.037	<0.365	<0.0371	<0.0375	<0.036	<0.404	<0.0369	**23000**
Naphthalene	**0.0414**	<0.037	<0.0355	**5.62**	**0.13**	<0.037	<0.365	<0.0371	<0.0375	**0.0783**	<0.404	**126**	**17**
Phenanthrene*	<0.0352	<0.037	<0.0355	<0.0362	<0.0361	<0.037	<0.365	<0.0371	<0.0375	<0.036	<0.404	**0.0379**	**202**
Bis(2-ethylhexyl)phthalate	**0.961**	<0.374	<0.359	<0.365	<0.364	<0.374	<3.69	<0.374	<0.379	<0.363	<4.08	<0.372	**160**

All results in milligrams per kilogram (mg/kg). Only detected constituents are shown.
Bold value indicates a laboratory detection.
Results compared to November 2015 EPA RSLs (HQ=0.1) for industrial soil unless otherwise specified
*EPA RSL not established - Results compared to ADEM PSVs for commercial soil
EPA RSL - Environmental Protection Agency Regional Screening Levels
ADEM PSV - Alabama Department of Environmental Management Preliminary Screening Value
Highlighted values indicate detected concentrations greater than the applicable screening level.
NA - not analyzed
NE - not established; no EPA RSL or ADEM PSV available

Table 3
Summary of Detected Constituents in Soil
Moundville Biodiesel Facility
12982 Cherokee Bend Drive
Moundville, Tuscaloosa County, Alabama

Lab Sample ID	L782656-13	L782656-14	L782656-15	L782656-16	
Client Sample ID	HA-3 0-1 FT	HA-3 3-5 FT	HA-4 0-1 FT	HA-4 3-5 FT	
Date Collected	8/12/2015	8/12/2015	8/12/2015	8/12/2015	
Analyte	Result	Result	Result	Result	EPA RSL ADEM PSV
Metals					
Arsenic	**4.9**	NA	**2.5**	NA	**3.0**
Barium	**31.8**	NA	**39.4**	NA	**2200**
Chromium*	**12.9**	NA	**6.84**	NA	**64**
	NA	NA	NA	NA	**6.3**
Lead	**11.1**	NA	**8.1**	NA	**800**
Mercury	**0.0487**	NA	**0.074**	NA	**4.0**
Volatile Organic Compounds (VOCs)					
N-butylbenzene	<0.00661	**7.71**	<0.00584	**7.12**	**5800**
Sec-butylbenzene	<0.00661	**1.61**	<0.00584	**1.3**	**12000**
Tert-butylbenzene	<0.00661	<0.662	<0.00584	<0.561	**12000**
Dicyclopentadiene	**0.0342**	**654**	<0.00584	**10.2**	**0.54**
Ethylbenzene	<0.00661	**2.93**	<0.00584	**12.4**	**25**
Isopropylbenzene	<0.00661	**3.04**	<0.00584	**2.89**	**990**
P-isopropyltoluene	<0.00661	<0.662	<0.00584	<0.561	**NE**
2-butanone (mek)	<0.0661	<6.62	<0.0584	<5.61	**19000**
Naphthalene	<0.0331	**573**	<0.0292	**89.7**	**17**
N-propylbenzene	<0.00661	**20.3**	<0.00584	**25.3**	**2400**
Styrene	<0.00661	**1.98**	<0.00584	**3.78**	**3500**
Toluene	<0.0331	<3.31	<0.0292	<2.8	**4700**
1,2,3-trimethylbenzene	<0.00661	**94.4**	<0.00584	**73.4**	**21**
1,2,4-trimethylbenzene	**0.00797**	**540**	<0.00584	**662**	**24**
1,3,5-trimethylbenzene	<0.00661	**66**	<0.00584	**39.5**	**1200**
Xylenes, total	<0.0198	**27.4**	<0.0175	**95.4**	**280**
Semi Volatile Organic Compounds (SVOCs)					
Anthracene	<0.0436	**0.118**	<0.385	<0.037	**23000**
Naphthalene	**0.049**	**189**	**0.58**	**114**	**17**
Phenanthrene*	<0.0436	**0.069**	<0.385	<0.037	**202**
Bis(2-ethylhexyl)phthalate	<0.44	<0.441	<3.89	<0.374	**160**

All results in milligrams per kilogram (mg/kg). Only detected constituents are shown.
Bold value indicates a laboratory detection.
Results compared to November 2015 EPA RSLs (HQ=0.1) for industrial soil unless otherwise specified
*EPA RSL not established - Results compared to ADEM PSVs for commercial soil
EPA RSL - Environmental Protection Agency Regional Screening Levels
ADEM PSV - Alabama Department of Environmental Management Preliminary Screening Value
Highlighted values indicate detected concentrations greater than the applicable screening level.
NA - not analyzed
NE - not established; no EPA RSL or ADEM PSV available

Table 4
Summary of Detected Constituents in Sub-Slab Vapor
Moundville Biodiesel Facility
12982 Cherokee Bend Drive
Moundville, Tuscaloosa County, Alabama

Sample ID	SS1	SS2	SS3	SS4	SS5	SS6	SS7	SS8	SS9	SS11	SS12	SS13	SS14			
Date Collected	10/1/2015	10/1/2015	10/1/2015	10/1/2015	10/1/2015	10/1/2015	10/1/2015	10/1/2015	10/1/2015	10/1/2015	10/1/2015	10/1/2015	10/1/2015			
Constituent	Result	Result	Result	Result	Result	Result	Result	Result	Result	Result	Result	Result	Result	EPA RSL	AF	Screening Level
Acetone	**0.32**	<0.024	<0.024	**0.033**	<0.024	**0.081**	<0.024	<0.024	<0.024	<0.024	<0.024	**0.18**	<0.024	**14**	**0.03**	**467**
Benzene	**0.033**	**0.057**	<0.0032	<0.0032	**0.042**	<0.0032	**0.11**	**1.7**	**1.1**	**3.8**	**0.028**	**0.0082**	<0.0032	**0.0016**	**0.03**	**0.053**
2-Butanone (MEK)	**0.096**	**0.093**	<0.030	<0.030	<0.030	<0.030	<0.030	<0.030	<0.030	<0.030	<0.030	**0.031**	<0.030	**2.2**	**0.03**	**73.3**
Chloroform	<0.0049	<0.0049	<0.0049	<0.0049	<0.0049	**0.0052**	<0.0049	<0.0049	<0.0049	<0.0049	<0.0049	<0.0049	<0.0049	**0.00053**	**0.03**	**0.018**
Chloromethane	<0.0041	<0.0041	<0.0041	<0.0041	<0.0041	**0.0026**	<0.0041	<0.0041	<0.0041	<0.0041	<0.0041	**0.0022**	<0.0041	**0.039**	**0.03**	**1.30**
Dicyclopentadiene	**4.1**	**37**	**0.046**	**0.0052**	**1.2**	<0.0042	**40**	<0.0042	**63**	**48**	**0.0063**	<0.0042	<0.0042	**0.00013**	**0.03**	**0.004**
1,1- Dichloroethane	<0.0041	<0.0041	<0.0041	<0.0041	<0.0041	<0.0041	<0.0041	<0.0041	<0.0041	**2.9**	<0.0041	<0.0041	<0.0041	**0.0077**	**0.03**	**0.257**
1,2- Dichloroethane	<0.0041	<0.0041	<0.0041	<0.0041	<0.0041	**0.0072**	<0.0041	<0.0041	<0.0041	<0.0041	<0.0041	<0.0041	<0.0041	**0.00047**	**0.03**	**0.016**
Ethlybenzene	**0.0071**	**0.017**	**0.005**	**0.0045**	**0.076**	<0.0044	**2.4**	**3.6**	**510**	**9.8**	**0.011**	**0.0093**	**0.0061**	**0.0049**	**0.03**	**0.163**
4-Ethyltoluene	<0.005	<0.005	<0.005	<0.005	**0.13**	<0.005	<0.005	<0.005	<0.005	<0.005	**0.0073**	**0.011**	<0.005	**NE**	**0.03**	**NE**
Naphthalene	<0.005	<0.005	<0.005	<0.005	<0.005	<0.005	**0.11**	**0.21**	<0.005	**0.1**	<0.005	<0.005	**0.0054**	**0.00036**	**0.03**	**0.012**
Methylene Chloride	<0.0071	**0.0078**	<0.0071	<0.0071	<0.0071	<0.0071	<0.0071	<0.0071	<0.0071	<0.0071	<0.0071	**0.0041**	<0.0071	**0.26**	**0.03**	**8.67**
4-Methyl-2-pentanone (MIBK)	**0.024**	**0.037**	<0.0083	<0.0083	<0.0083	<0.0083	<0.0083	<0.0083	<0.0083	<0.0083	<0.0083	**0.0095**	<0.0083	**1.3**	**0.03**	**43.3**
Styrene	<0.0043	<0.0043	<0.0043	<0.0043	**0.012**	**0.0065**	<0.0043	<0.0043	<0.0043	<0.0043	<0.0043	**0.0057**	**0.0066**	**0.44**	**0.03**	**14.7**
Tetrachloroethene	**0.0061**	<0.0069	<0.0069	**0.018**	**0.032**	<0.0069	<0.0069	<0.0069	<0.0069	<0.0069	**0.0083**	<0.0069	<0.0069	**0.047**	**0.03**	**1.57**
Toluene	**0.058**	**0.042**	**0.048**	**0.018**	**0.037**	**0.015**	<0.0038	<0.0038	**12**	**26**	**0.056**	**0.11**	**0.034**	**2.2**	**0.03**	**73.3**
Trichloroethene	<0.0055	<0.0055	<0.0055	<0.0055	<0.0055	<0.0055	<0.0055	**0.17**	<0.0055	<0.0055	<0.0055	<0.0055	<0.0055	**0.00088**	**0.03**	**0.029**
1,2,4-Trimethylbenzene	**0.0089**	**0.022**	**0.0069**	**0.0056**	**0.27**	**0.0089**	**56**	**54**	**100**	**21**	**0.036**	**0.07**	**0.012**	**0.0031**	**0.03**	**0.103**
1,3,5- Trimethlybenzene	<0.005	**0.019**	<0.005	<0.005	**0.063**	<0.005	**27**	**29**	**21**	**13**	**0.015**	**0.028**	<0.005	**NE**	**0.03**	**NE**
m,p-Xylene	**0.025**	**0.08**	**0.014**	**0.013**	**0.15**	**0.013**	**7.8**	**5.5**	**510**	**17**	**0.042**	**0.069**	**0.021**	**0.044**	**0.03**	**1.47**
o-Xylene	**0.0093**	**0.031**	**0.0081**	**0.0055**	**0.16**	**0.0052**	**12**	**12**	**66**	**18**	**0.018**	**0.024**	**0.0076**	**0.044**	**0.03**	**1.47**

All values in milligrams per cubic meter (mg/m^3)
Bold value indicates a laboratory detection.
EPA RSL - EPA Regional Screening Level for industrial air
AF - slab attenuation factor
Screening Level - EPA RSL divided by AF
Highlighted values indicate detected concentrations greater than the applicable screening level.
NA - Not available
NE - not established; no EPA RSL available

Table 5
Summary of Indoor Air Anaytical Results
Moundville Biodiesel Facility
12982 Cherokee Bend Drive
Moundville, Tuscaloosa County, Alabama

Sample ID	**CR-1**	**LAB 1**	**MS-1**	**OFFICE 1**	
Date Collected	**4/17/2016**	**4/17/2016**	**4/17/2016**	**4/17/2016**	
Constituent	**Result**	**Result**	**Result**	**Result**	**EPA RSL**
Benzene	**0.0066**	**0.0007**	**0.0039**	<0.0006	**0.0016**
1,1- Dichloroethane	<0.0008	<0.0008	<0.0008	<0.0008	**0.0077**
Dicyclopentadiene	**0.031**	<0.016	**0.12**	<0.016	**0.00013**
Ethlybenzene	<0.0009	**0.0009**	**0.004**	<0.0009	**0.0049**
Naphthalene	**0.0005**	<0.0003	<0.0003	<0.0003	**0.00036**
Trichloroethene	<0.001	<0.001	<0.001	<0.001	**0.00088**
1,2,4-Trimethylbenzene	<0.001	<0.001	**0.004**	<0.001	**0.0031**
m,p-Xylene	**0.01**	**0.002**	**0.013**	**0.003**	**0.044**
o-Xylene	<0.009	**0.009**	**0.0048**	**0.001**	**0.044**

All values in milligrams per cubic meter (mg/m^3)
Bold value indicates a laboratory detection
EPA RSL - EPA Regional Screening Level for industrial air
Highlighted values indicate detected concentrations greater than the applicable screening level.
CR - Control room
MS - Maintenance shop

EXHIBITS

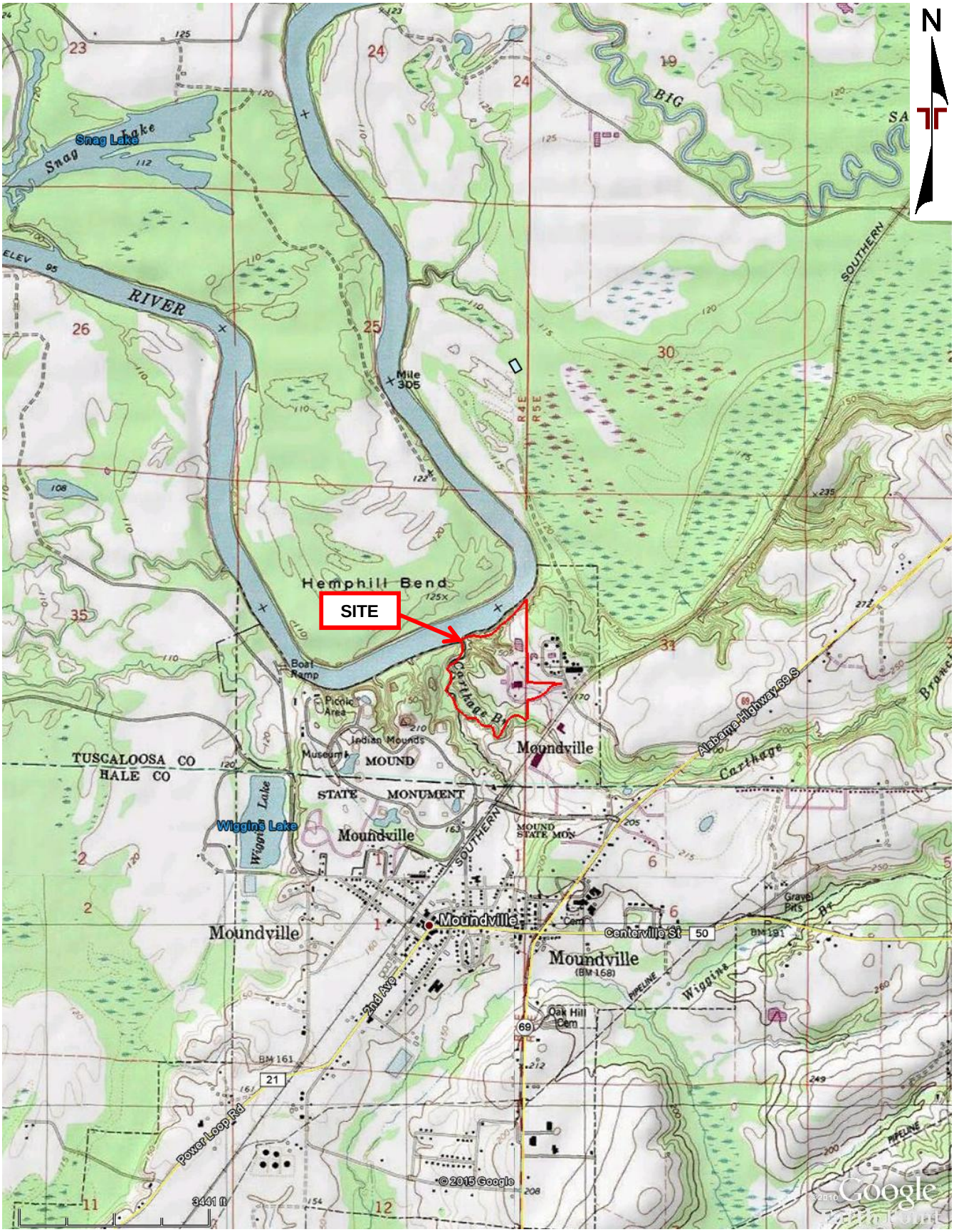

Project Manager: TN	Project No. E1157122	Terracon	Topographic Map	Exhibit
Drawn By: TN	Scale: As shown	110 12th Street North Birmingham, Alabama 35203	Voluntary Cleanup Program Veros Energy, LLC 12982 Cherokee Bend Drive Moundville, Tuscaloosa County, Alabama	1
Checked By: FMN	File Name: E1157122	PH. (205) 942-1289 FAX. (205) 443-5302		
Approved By: FMN	Date: 10/12/15			

BLACK WARRIOR RIVER

WOODED

MW-8

MW-9

MW-6

AREA C

MW-10

MW-16

FORMER ASPHALT PLANT

MW-5D

FORMER AERATION TANK

AREA B

MW-11

MW-13S

MW-13D

MW-14

FORMER FIRE POND

FORMER SETTLING POND

MW-4

FORMER T-PIPE POND

AREA G

MAINTENANCE SHOP

AREA A

CONTROL ROOM

MW-12

MOUND STATE ARCHAEOLOGICAL PARK

MW-3

AREA D

WAREHOUSE

MW-15

CARTHAGE BRANCH

FORMER DRUM STORAGE AREA

FORMER KRUMBHAAR PLANT

OFFICE

UNDERGROUND STORM DRAIN

RURAL RESIDENTIAL PROPERTIES

MW-2

FORMER REFUELING AREA

AREA E

MW-1

AREA F

RAILROAD

N

0 260

Approximate Scale (Feet)

LEGEND

- APPROXIMATE SITE BOUNDARY
- SHALLOW MONITORING WELL LOCATION
- DEEP MONITORING WELL LOCATION
- DESTROYED MONITORING WELL LOCATION
- ABOVE-GROUND STORAGE TANK
- RESTRICTED USE AREA*
- SPRING/SEEP LOCATION

THIS DIAGRAM IS FOR GENERAL LOCATION ONLY, AND IS NOT INTENDED FOR CONSTRUCTION PURPOSES

* LOCATIONS ARE APPROXIMATE BASED ON OCTOBER 3, 2003 WARRANTY DEED

Project Mngr: TGN	Project No. E1157122	Terracon Consulting Engineers and Scientists	SITE DIAGRAM
Drawn By: RLW	Scale: AS SHOWN	110 12th Street North Birmingham, Alabama 35203	VOLUNTARY CLEANUP PROGRAM
Checked By: TGN/MRG	File No. VCRE1157122-2	(205) 942-1289 (205) 443-5302	VEROS ENERGY, LLC
Approved By: TGN	Date: NOV. 2015		12982 CHEROKEE BEND DRIVE
			MOUNDVILLE, AL

EXHIBIT 2

BLACK WARRIOR RIVER

MOUND STATE ARCHAEOLOGICAL PARK

CARTHAGE BRANCH

WOODED

(142.81) MW-8

(146.51) MW-9

(DRY) MW-6

(NL) MW-10

AREA C

AREA B

MW-5D

FORMER AERATION TANK

FORMER SETTLING POND

FORMER FIRE POND

FORMER T-PIPE POND

AREA G

(112.40) MW-4

AREA A

AREA D

(112.92) MW-3

CONTROL ROOM

WAREHOUSE

(NM) MW-16

FORMER ASPHALT PLANT

MW-11 (154.54)

MW-13S

MW-13D

MW-14 (NL)

MW-12 (152.39)

MW-15 (152.64)

FORMER KRUMBHAAR PLANT

FORMER DRUM STORAGE AREA

FORMER REFUELING AREA

OFFICE

UNDERGROUND STORM DRAIN

RURAL RESIDENTIAL PROPERTIES

RAILROAD

MW-2

AREA E

MW-1 (NL)

AREA F

116 120 124 128 132 136 140 144 148 152

N

0 260

Approximate Scale (Feet)

LEGEND

- APPROXIMATE SITE BOUNDARY
- SHALLOW MONITORING WELL LOCATION
- DEEP MONITORING WELL LOCATION
- DESTROYED MONITORING WELL LOCATION
- ABOVE-GROUND STORAGE TANK
- RESTRICTED USE AREA*
- (112.92) GROUNDWATER ELEVATION, IN FEET
- 116 GROUNDWATER CONTOUR, IN FEET
- SURFICIAL WATER FLOW DIRECTION
- (NL) NOT LOCATED
- (NM) NOT MEASURED

THIS DIAGRAM IS FOR GENERAL LOCATION ONLY, AND IS NOT INTENDED FOR CONSTRUCTION PURPOSES

* LOCATIONS ARE APPROXIMATE BASED ON OCTOBER 3, 2003 WARRANTY DEED

Project Mngr: TGN	Project No. E1157122	Terracon Consulting Engineers and Scientists	POTENTIOMETRIC SURFACE MAP (FEBRUARY 18, 2016)
Drawn By: TLY	Scale: AS SHOWN		VOLUNTARY CLEANUP PROGRAM
Checked By: TGN/MRG	File No. VCRE1157122-3		VEROS ENERGY, LLC
Approved By: TGN	Date: MARCH 2016	110 12th Street North Birmingham, Alabama 35203 (205) 942-1289 (205) 443-5302	12982 CHEROKEE BEND DRIVE MOUNDVILLE, AL

EXHIBIT 3

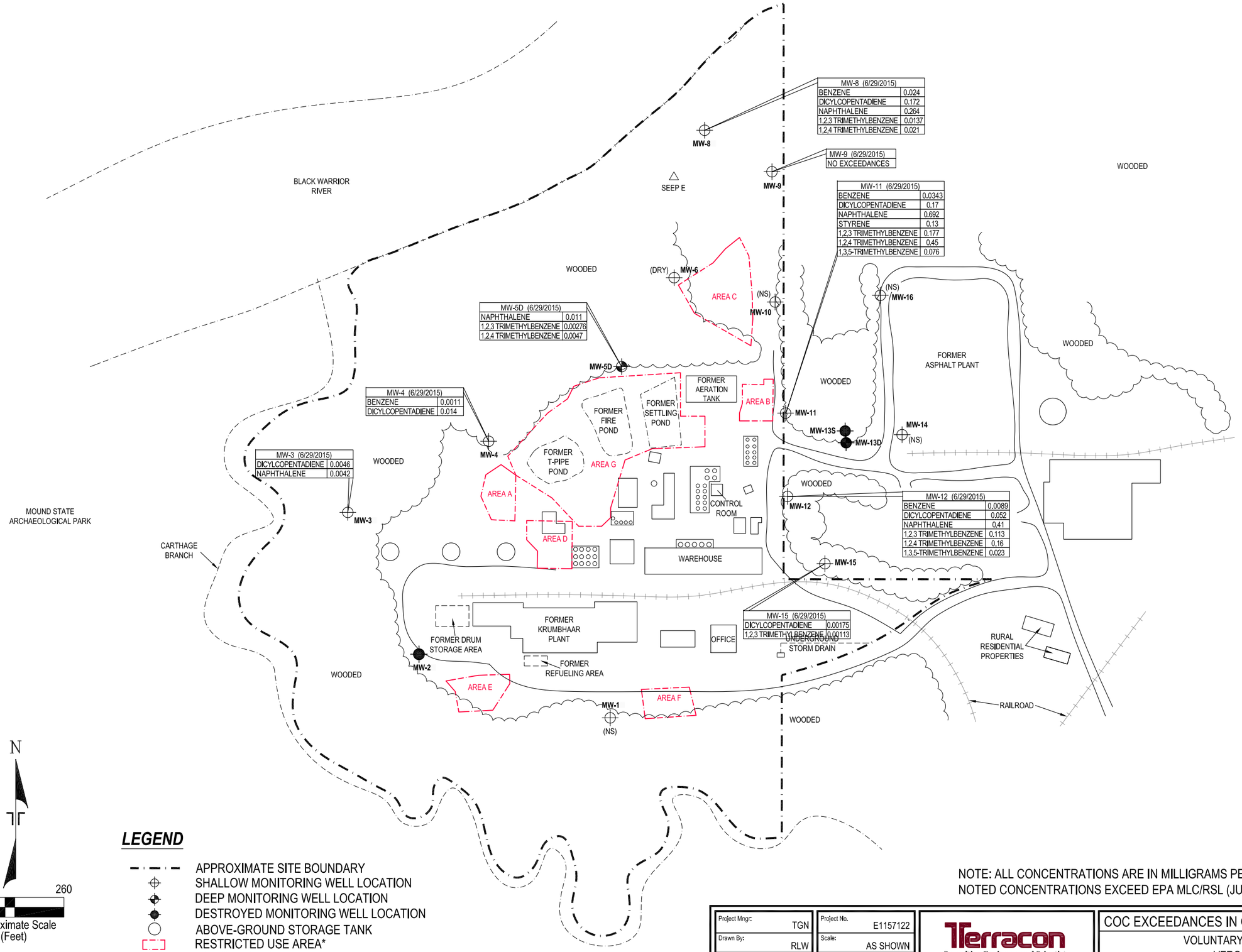

MW-8 (6/29/2015)	
BENZENE	0.024
DICYLCOPENTADIENE	0.172
NAPHTHALENE	0.264
1,2,3 TRIMETHYLBENZENE	0.0137
1,2,4 TRIMETHYLBENZENE	0.021

MW-9 (6/29/2015)
NO EXCEEDANCES

MW-11 (6/29/2015)	
BENZENE	0.0343
DICYLCOPENTADIENE	0.17
NAPHTHALENE	0.692
STYRENE	0.13
1,2,3 TRIMETHYLBENZENE	0.177
1,2,4 TRIMETHYLBENZENE	0.45
1,3,5-TRIMETHYLBENZENE	0.076

MW-5D (6/29/2015)	
NAPHTHALENE	0.011
1,2,3 TRIMETHYLBENZENE	0.00276
1,2,4 TRIMETHYLBENZENE	0.0047

MW-4 (6/29/2015)	
BENZENE	0.0011
DICYLCOPENTADIENE	0.014

MW-3 (6/29/2015)	
DICYLCOPENTADIENE	0.0046
NAPHTHALENE	0.0042

MW-12 (6/29/2015)	
BENZENE	0.0089
DICYLCOPENTADIENE	0.052
NAPHTHALENE	0.41
1,2,3 TRIMETHYLBENZENE	0.113
1,2,4 TRIMETHYLBENZENE	0.16
1,3,5-TRIMETHYLBENZENE	0.023

MW-15 (6/29/2015)	
DICYLCOPENTADIENE	0.00175
1,2,3 TRIMETHYLBENZENE	0.00113

LEGEND

- APPROXIMATE SITE BOUNDARY
- SHALLOW MONITORING WELL LOCATION
- DEEP MONITORING WELL LOCATION
- DESTROYED MONITORING WELL LOCATION
- ABOVE-GROUND STORAGE TANK
- RESTRICTED USE AREA*
- (NS) NOT SAMPLED
- SPRING/SEEP LOCATION

NOTE: ALL CONCENTRATIONS ARE IN MILLIGRAMS PER LITER (mg/L).
NOTED CONCENTRATIONS EXCEED EPA MLC/RSL (JUNE 2015, THQ = 0.1)

THIS DIAGRAM IS FOR GENERAL LOCATION ONLY, AND IS NOT INTENDED FOR CONSTRUCTION PURPOSES

* LOCATIONS ARE APPROXIMATE BASED ON OCTOBER 3, 2003 WARRANTY DEED

Project Mngr: TGN	Project No. E1157122	Terracon Consulting Engineers and Scientists	COC EXCEEDANCES IN GROUNDWATER (JUNE 29, 2015)
Drawn By: RLW	Scale: AS SHOWN		VOLUNTARY CLEANUP PROGRAM
Checked By: TGN/MRG	File No. VCRE1157122-4		VEROS ENERGY, LLC
Approved By: TGN	Date: NOV. 2015	110 12th Street North Birmingham, Alabama 35203 (205) 942-1289 (205) 443-5302	12982 CHEROKEE BEND DRIVE MOUNDVILLE, AL

EXHIBIT 4

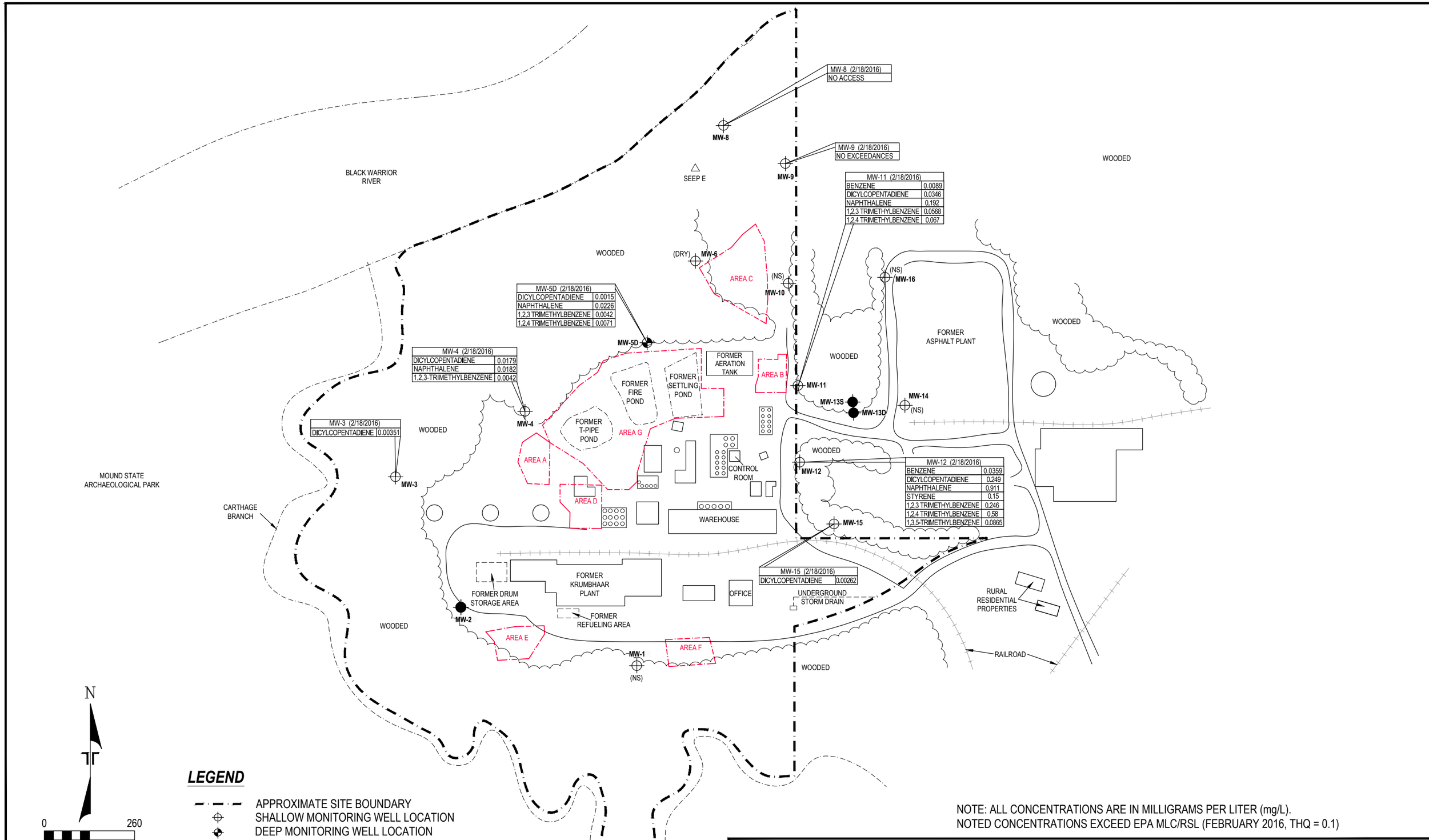

NOTE: ALL CONCENTRATIONS ARE IN MILLIGRAMS PER LITER (mg/L).
NOTED CONCENTRATIONS EXCEED EPA MLC/RSL (FEBRUARY 2016, THQ = 0.1)

THIS DIAGRAM IS FOR GENERAL LOCATION ONLY, AND IS NOT INTENDED FOR CONSTRUCTION PURPOSES

* LOCATIONS ARE APPROXIMATE BASED ON OCTOBER 3, 2003 WARRANTY DEED

Project Mngr: TGN	Project No. E1157122	Terracon Consulting Engineers and Scientists	COC EXCEEDANCES IN GROUNDWATER (FEBRUARY 18, 2016)
Drawn By: TLY	Scale: AS SHOWN	110 12th Street North Birmingham, Alabama 35203	VOLUNTARY CLEANUP PROGRAM
Checked By: TGN/MRG	File No. VCRE1157122-5	(205) 942-1289 (205) 443-5302	VEROS ENERGY, LLC
Approved By: TGN	Date: MARCH 2016		12982 CHEROKEE BEND DRIVE
			MOUNDVILLE, AL

EXHIBIT 5

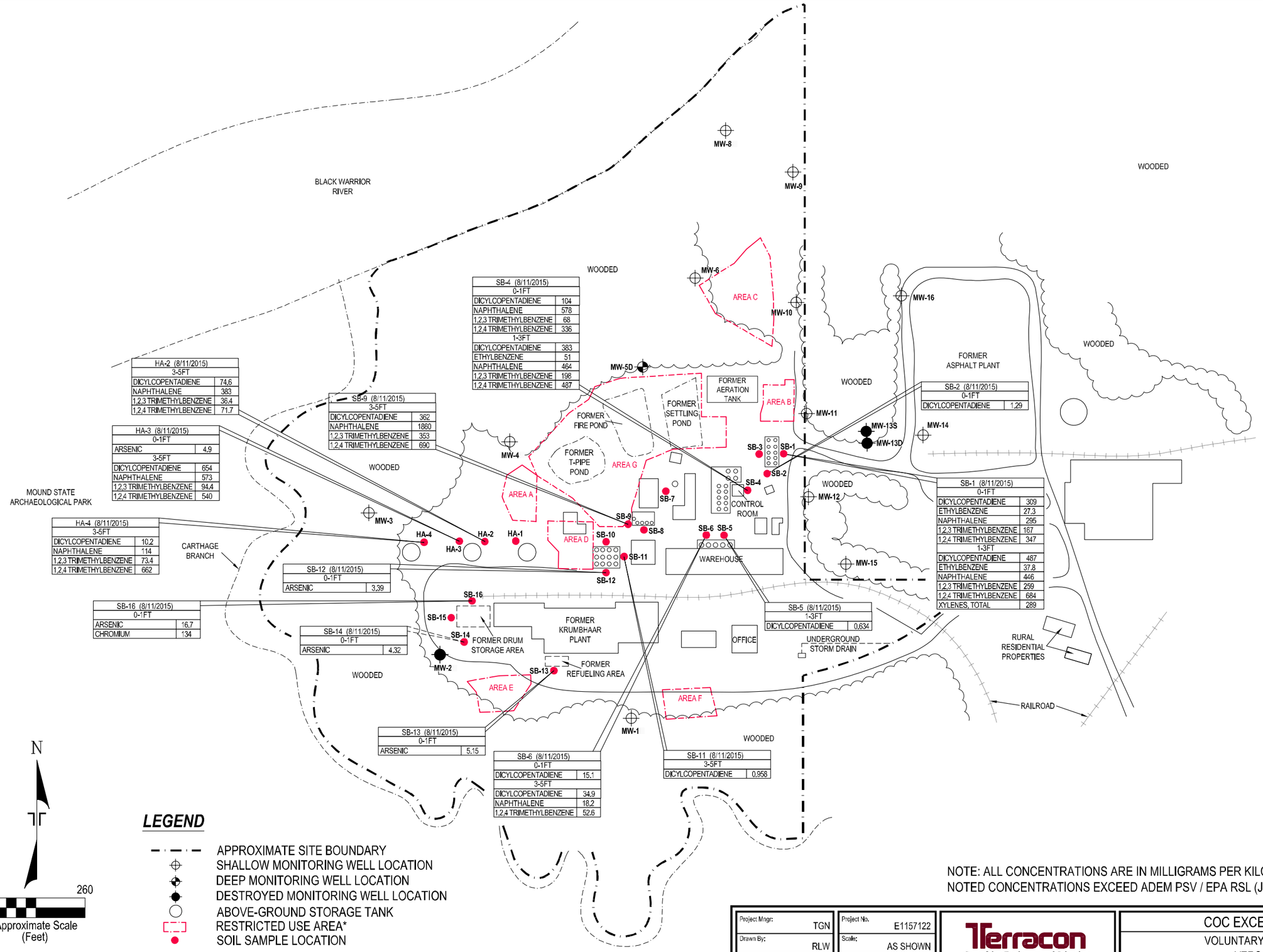

SB-4 (8/11/2015)	
0-1FT	
DICYLCOPENTADIENE	104
NAPHTHALENE	578
1,2,3 TRIMETHYLBENZENE	68
1,2,4 TRIMETHYLBENZENE	336
1-3FT	
DICYLCOPENTADIENE	383
ETHYLBENZENE	51
NAPHTHALENE	464
1,2,3 TRIMETHYLBENZENE	198
1,2,4 TRIMETHYLBENZENE	487

HA-2 (8/11/2015)	
3-5FT	
DICYLCOPENTADIENE	74.6
NAPHTHALENE	383
1,2,3 TRIMETHYLBENZENE	36.4
1,2,4 TRIMETHYLBENZENE	71.7

SB-9 (8/11/2015)	
3-5FT	
DICYLCOPENTADIENE	362
NAPHTHALENE	1860
1,2,3 TRIMETHYLBENZENE	353
1,2,4 TRIMETHYLBENZENE	690

HA-3 (8/11/2015)	
0-1FT	
ARSENIC	4.9
3-5FT	
DICYLCOPENTADIENE	654
NAPHTHALENE	573
1,2,3 TRIMETHYLBENZENE	94.4
1,2,4 TRIMETHYLBENZENE	540

SB-2 (8/11/2015)	
0-1FT	
DICYLCOPENTADIENE	1.29

SB-1 (8/11/2015)	
0-1FT	
DICYLCOPENTADIENE	309
ETHYLBENZENE	27.3
NAPHTHALENE	295
1,2,3 TRIMETHYLBENZENE	167
1,2,4 TRIMETHYLBENZENE	347
1-3FT	
DICYLCOPENTADIENE	487
ETHYLBENZENE	37.8
NAPHTHALENE	446
1,2,3 TRIMETHYLBENZENE	259
1,2,4 TRIMETHYLBENZENE	684
XYLENES, TOTAL	289

HA-4 (8/11/2015)	
3-5FT	
DICYLCOPENTADIENE	10.2
NAPHTHALENE	114
1,2,3 TRIMETHYLBENZENE	73.4
1,2,4 TRIMETHYLBENZENE	662

SB-12 (8/11/2015)	
0-1FT	
ARSENIC	3.39

SB-16 (8/11/2015)	
0-1FT	
ARSENIC	16.7
CHROMIUM	134

SB-5 (8/11/2015)	
1-3FT	
DICYLCOPENTADIENE	0.634

SB-14 (8/11/2015)	
0-1FT	
ARSENIC	4.32

SB-13 (8/11/2015)	
0-1FT	
ARSENIC	5.15

SB-6 (8/11/2015)	
0-1FT	
DICYLCOPENTADIENE	15.1
3-5FT	
DICYLCOPENTADIENE	34.9
NAPHTHALENE	18.2
1,2,4 TRIMETHYLBENZENE	52.6

SB-11 (8/11/2015)	
3-5FT	
DICYLCOPENTADIENE	0.958

NOTE: ALL CONCENTRATIONS ARE IN MILLIGRAMS PER KILOGRAM (mg/kg).
NOTED CONCENTRATIONS EXCEED ADEM PSV / EPA RSL (JUNE 2015, THQ = 0.1)

THIS DIAGRAM IS FOR GENERAL LOCATION ONLY, AND IS NOT INTENDED FOR CONSTRUCTION PURPOSES

* LOCATIONS ARE APPROXIMATE BASED ON OCTOBER 3, 2003 WARRANTY DEED

Project Mngr: TGN	Project No. E1157122	Terracon Consulting Engineers and Scientists	COC EXCEEDANCES IN SOIL
Drawn By: RLW	Scale: AS SHOWN		VOLUNTARY CLEANUP PROGRAM
Checked By: TGN/MRG	File No. VCRE1157122-5		VEROS ENERGY, LLC
Approved By: TGN	Date: NOV. 2015	110 12th Street North Birmingham, Alabama 35203 (205) 942-1289 (205) 443-5302	12982 CHEROKEE BEND DRIVE MOUNDVILLE, AL

EXHIBIT 6

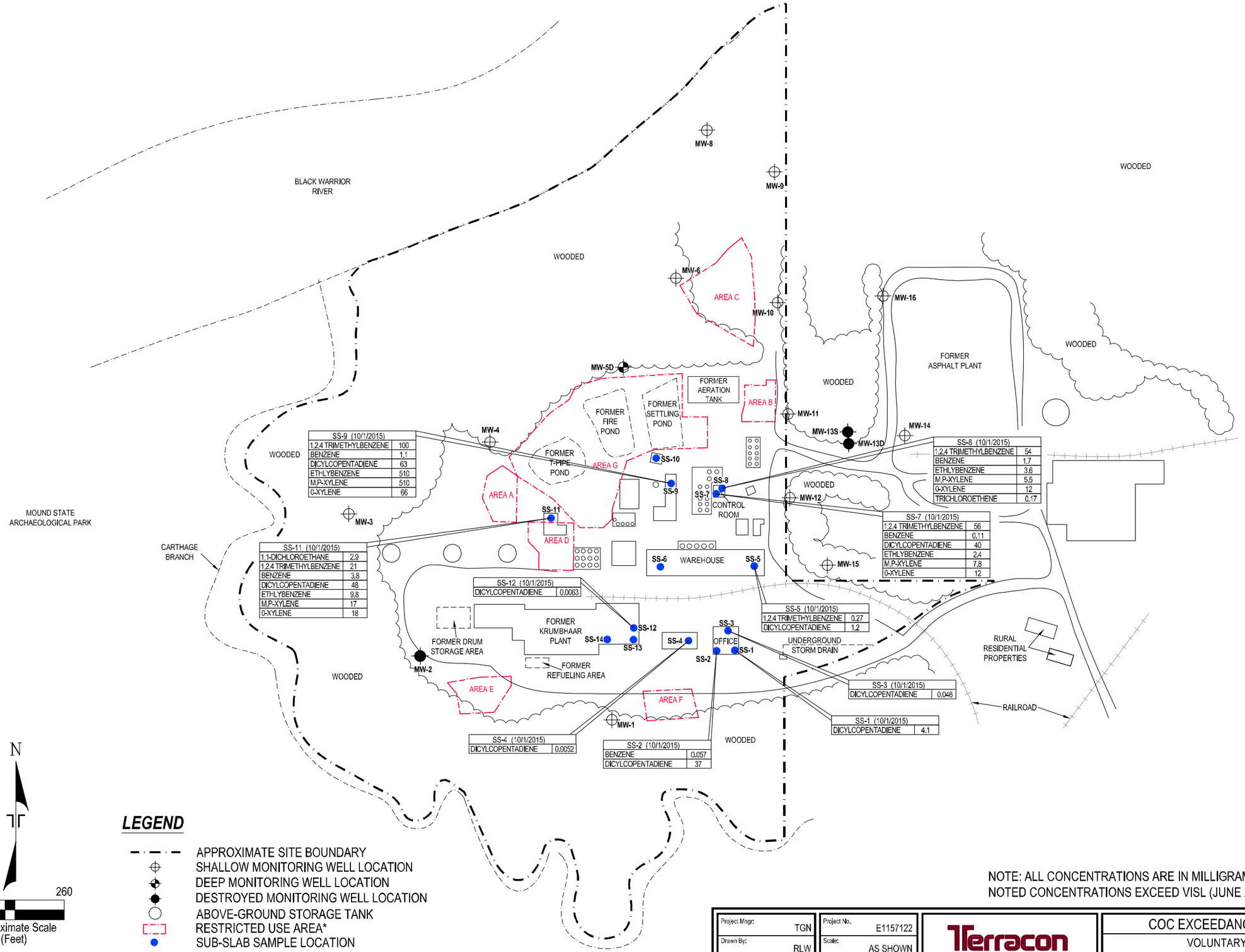

NOTE: ALL CONCENTRATIONS ARE IN MILLIGRAMS PER CUBIC METER (mg/m³).
NOTED CONCENTRATIONS EXCEED VISL (JUNE 2015 EPA RSL IND AIR, AF = 0.03)

THIS DIAGRAM IS FOR GENERAL LOCATION ONLY, AND IS NOT INTENDED FOR CONSTRUCTION PURPOSES

* LOCATIONS ARE APPROXIMATE BASED ON OCTOBER 3, 2003 WARRANTY DEED

Project Mngr: TGN	Project No. E1157122	Terracon Consulting Engineers and Scientists	COC EXCEEDANCES IN SUB-SLAB VAPOR
Drawn By: RLW	Scale: AS SHOWN	110 12th Street North Birmingham, Alabama 35203	VOLUNTARY CLEANUP PROGRAM
Checked By: TGN/MRG	File No. VCRE1157122-6	(205) 942-1289 (205) 443-5302	VEROS ENERGY, LLC
Approved By: TGN	Date: NOV. 2015		12982 CHEROKEE BEND DRIVE
			MOUNDVILLE, AL

EXHIBIT 7

APPENDIX A

Office Location: Birmingham, AL.

Terracon provides Geotechnical, Environmental, Construction Materials, and Facilities Consulting Engineering Services delivered with responsiveness, resourcefulness, and reliability.

SITE:	Veros Energy	PROJECT #:	E1157122
WELL ID:	**MW-3**	DATE:	02/18/16
SAMPLE TYPE:	Grab	CITY, STATE	Moundville, AL
SAMPLED BY:	Anna Samuels and JD Naccari	WEATHER:	Sunny 50's

MONITORING WELL SAMPLING RECORD

WELL MEASUREMENT TIME:	1410
DEPTH TO WATER (feet):	36.70
TOTAL DEPTH OF WELL (feet):	52.77
WATER COLUMN (feet):	16.07
ONE WELL VOLUME (gal):	2.62
THREE WELL VOLUMES (gal):	7.86
ACTUAL GALLONS PURGED:	1.5 (dry)
PURGE TIME:	1420
METHOD OF PURGING:	Bailer
METHOD OF SAMPLING:	Bailer
SAMPLE COLLECTION TIME:	1530

INTRINSIC GROUNDWATER PARAMETERS

TEMPERATURE (°C):	18.8
SPECIFIC CONDUCTANCE (µs/cm):	135
pH (Standard Units):	5.46
DISSOLVED OXYGEN (mg/L)	3.66
ORP (mV):	119

REASON FOR SAMPLING:	Cleanup Plan / Risk Assesment
ANALYSIS:	VOCs
CONTAINER:	2 x 40 mL amber vials
PRESERVATIVE:	HCl, ice
METHOD OF SHIPMENT:	ESC Courier to FedEx.

REMARKS

ESC - Environmental Science Corp.

^{o}C - degrees Celcius; µs/cm - micro Siemens per centimeter; mg/L - milligrams per Liter; mV - millivolts

ORP - Oxidation-Reduction Potential

VOCs- Volatile Organic Compounds

Office Location: Birmingham, AL.

Terracon provides Geotechnical, Environmental, Construction Materials, and Facilities Consulting Engineering Services delivered with responsiveness, resourcefulness, and reliability.

SITE:	Veros Energy	PROJECT #:	E1157122
WELL ID:	**MW-4**	DATE:	02/18/16
SAMPLE TYPE:	Grab	CITY, STATE	Moundville, AL
SAMPLED BY:	Anna Samuels and JD Naccari	WEATHER:	Sunny, 50s

MONITORING WELL SAMPLING RECORD

WELL MEASUREMENT TIME:	1430
DEPTH TO WATER (feet):	43.46
TOTAL DEPTH OF WELL (feet):	52.84
WATER COLUMN (feet):	9.38
ONE WELL VOLUME (gal):	1.53
THREE WELL VOLUMES (gal):	4.59
ACTUAL GALLONS PURGED:	4.8
PURGE TIME:	1440
METHOD OF PURGING:	Bailer
METHOD OF SAMPLING:	Bailer
SAMPLE COLLECTION TIME:	1545

INTRINSIC GROUNDWATER PARAMETERS

TEMPERATURE (°C):	19.6
SPECIFIC CONDUCTANCE (µs/cm):	162
pH (Standard Units):	5.88
DISSOLVED OXYGEN (mg/L)	1.95
ORP (mV):	69.3

REASON FOR SAMPLING:	Cleanup Plan/ Risk Assessment
ANALYSIS:	VOCs
CONTAINER:	2 x 40 mL amber vials
PRESERVATIVE:	HCl, ice
METHOD OF SHIPMENT:	ESC Courier to FedEx.

REMARKS

ESC - Environmental Science Corp.

^{o}C - degrees Celcius; µs/cm - micro Siemens per centimeter; mg/L - milligrams per Liter; mV - millivolts

ORP - Oxidation-Reduction Potential

VOCs- Volatile Organic Compounds

Office Location: Birmingham, AL.

Terracon provides Geotechnical, Environmental, Construction Materials, and Facilities Consulting Engineering Services delivered with responsiveness, resourcefulness, and reliability.

SITE:	Veros Energy	PROJECT #:	E1157122
WELL ID:	**MW-5D**	DATE:	02/18/16
SAMPLE TYPE:	Grab	CITY, STATE	Moundville, AL
SAMPLED BY:	Anna Samuels and JD Naccari	WEATHER:	Sunny, 50s

MONITORING WELL SAMPLING RECORD

WELL MEASUREMENT TIME:	1315
DEPTH TO WATER (feet):	46.10
TOTAL DEPTH OF WELL (feet):	86.88
WATER COLUMN (feet):	40.78
ONE WELL VOLUME (gal):	6.65
THREE WELL VOLUMES (gal):	19.94
ACTUAL GALLONS PURGED:	13.75 (dry)
PURGE TIME:	1325
METHOD OF PURGING:	Bailer
METHOD OF SAMPLING:	Bailer
SAMPLE COLLECTION TIME:	1510

INTRINSIC GROUNDWATER PARAMETERS

TEMPERATURE (°C):	19.8
SPECIFIC CONDUCTANCE (µs/cm):	116
pH (Standard Units):	6.46
DISSOLVED OXYGEN (mg/L)	3.96
ORP (mV):	-23.5

REASON FOR SAMPLING:	Cleanup Plan/ Risk Assessment
ANALYSIS:	VOCs
CONTAINER:	2 x 40 mL amber vials
PRESERVATIVE:	HCl, ice
METHOD OF SHIPMENT:	ESC Courier to FedEx.

REMARKS

ESC - Environmental Science Corp.

^{o}C - degrees Celcius; µs/cm - micro Siemens per centimeter; mg/L - milligrams per Liter; mV - millivolts

ORP - Oxidation-Reduction Potential

VOCs- Volatile Organic Compounds

Office Location: Birmingham, AL.

Terracon provides Geotechnical, Environmental, Construction Materials, and Facilities Consulting Engineering Services delivered with responsiveness, resourcefulness, and reliability.

SITE:	Veros Energy	PROJECT #:	E1157122
WELL ID:	**MW-6**	DATE:	02/18/16
SAMPLE TYPE:	Grab	CITY, STATE	Moundville, AL
SAMPLED BY:	Anna Samuels and JD Naccari	WEATHER:	Sunny, 50s

MONITORING WELL SAMPLING RECORD

WELL MEASUREMENT TIME:	1140
DEPTH TO WATER (feet):	Dry
TOTAL DEPTH OF WELL (feet):	12.75
WATER COLUMN (feet):	
ONE WELL VOLUME (gal):	
THREE WELL VOLUMES (gal):	
ACTUAL GALLONS PURGED:	
PURGE TIME:	
METHOD OF PURGING:	
METHOD OF SAMPLING:	
SAMPLE COLLECTION TIME:	

INTRINSIC GROUNDWATER PARAMETERS

TEMPERATURE (°C):	
SPECIFIC CONDUCTANCE (µs/cm):	
pH (Standard Units):	
DISSOLVED OXYGEN (mg/L)	
ORP (mV):	

REASON FOR SAMPLING:	Cleanup Plan/ Risk Assessment
ANALYSIS:	VOCs
CONTAINER:	2 x 40 mL amber vials
PRESERVATIVE:	HCl, ice
METHOD OF SHIPMENT:	ESC Courier to FedEx.

REMARKS

ESC - Environmental Science Corp.

^{o}C - degrees Celcius; µs/cm - micro Siemens per centimeter; mg/L - milligrams per Liter; mV - millivolts

ORP - Oxidation-Reduction Potential

VOCs- Volatile Organic Compounds

Office Location: Birmingham, AL.

Terracon provides Geotechnical, Environmental, Construction Materials, and Facilities Consulting Engineering Services delivered with responsiveness, resourcefulness, and reliability.

SITE:	Veros Energy	PROJECT #:	E1157122
WELL ID:	**MW-8**	DATE:	02/18/16
SAMPLE TYPE:	Grab	CITY, STATE	Moundville,AL
SAMPLED BY:	Anna Samuels and JD Naccari	WEATHER:	Sunny, 50s

MONITORING WELL SAMPLING RECORD

WELL MEASUREMENT TIME:	1130
DEPTH TO WATER (feet):	Obstructed at 34.0 ft
TOTAL DEPTH OF WELL (feet):	52.81
WATER COLUMN (feet):	
ONE WELL VOLUME (gal):	
THREE WELL VOLUMES (gal):	
ACTUAL GALLONS PURGED:	
PURGE TIME:	
METHOD OF PURGING:	
METHOD OF SAMPLING:	
SAMPLE COLLECTION TIME:	

INTRINSIC GROUNDWATER PARAMETERS

TEMPERATURE (°C):	
SPECIFIC CONDUCTANCE (µs/cm):	
pH (Standard Units):	
DISSOLVED OXYGEN (mg/L)	
ORP (mV):	

REASON FOR SAMPLING:	Cleanup Plan / Risk Assessment
ANALYSIS:	VOCs
CONTAINER:	2 x 40 mL amber vials
PRESERVATIVE:	HCl, ice
METHOD OF SHIPMENT:	ESC Courier to FedEx.

REMARKS

ESC - Environmental Science Corp.

^{o}C - degrees Celcius; µs/cm - micro Siemens per centimeter; mg/L - milligrams per Liter; mV - millivolts

ORP - Oxidation-Reduction Potential

VOCs- Volatile Organic Compounds

Office Location: Birmingham, AL.

Terracon provides Geotechnical, Environmental, Construction Materials, and Facilities Consulting Engineering Services delivered with responsiveness, resourcefulness, and reliability.

SITE:	Veros Energy	PROJECT #:	E1157122
WELL ID:	**MW-9**	DATE:	02/18/16
SAMPLE TYPE:	Grab	CITY, STATE	Moundville,AL
SAMPLED BY:	Anna Samuels and JD Naccari	WEATHER:	Sunny, 50s

MONITORING WELL SAMPLING RECORD

WELL MEASUREMENT TIME:	1155
DEPTH TO WATER (feet):	44.49
TOTAL DEPTH OF WELL (feet):	62.81
WATER COLUMN (feet):	18.32
ONE WELL VOLUME (gal):	3.0
THREE WELL VOLUMES (gal):	8.96
ACTUAL GALLONS PURGED:	6.5 (dry)
PURGE TIME:	1200
METHOD OF PURGING:	Bailer
METHOD OF SAMPLING:	Bailer
SAMPLE COLLECTION TIME:	1230

INTRINSIC GROUNDWATER PARAMETERS

TEMPERATURE (°C):	19.6
SPECIFIC CONDUCTANCE (µs/cm):	63
pH (Standard Units):	5.28
DISSOLVED OXYGEN (mg/L)	5.45
ORP (mV):	153.1

REASON FOR SAMPLING:	Cleanup Plan /Risk Assessment
ANALYSIS:	VOCs
CONTAINER:	2 x 40 mL amber vials
PRESERVATIVE:	HCl, ice
METHOD OF SHIPMENT:	ESC Courier to FedEx.

REMARKS

ESC - Environmental Science Corp.

^{o}C - degrees Celcius; µs/cm - micro Siemens per centimeter; mg/L - milligrams per Liter; mV - millivolts

ORP - Oxidation-Reduction Potential

VOCs- Volatile Organic Compounds

Office Location: Birmingham, AL.

Terracon provides Geotechnical, Environmental, Construction Materials, and Facilities Consulting Engineering Services delivered with responsiveness, resourcefulness, and reliability.

SITE:	Veros Energy	PROJECT #:	E1157122
WELL ID:	**MW-11**	DATE:	02/18/16
SAMPLE TYPE:	Grab	CITY, STATE	Moundville,AL
SAMPLED BY:	Anna Samuels and JD Naccari	WEATHER:	Sunny, 50s

MONITORING WELL SAMPLING RECORD

WELL MEASUREMENT TIME:	1020
DEPTH TO WATER (feet):	26.90
TOTAL DEPTH OF WELL (feet):	40.39
WATER COLUMN (feet):	13.49
ONE WELL VOLUME (gal):	2.20
THREE WELL VOLUMES (gal):	6.60
ACTUAL GALLONS PURGED:	2.5 (dry)
PURGE TIME:	1040
METHOD OF PURGING:	Bailer
METHOD OF SAMPLING:	Bailer
SAMPLE COLLECTION TIME:	1250

INTRINSIC GROUNDWATER PARAMETERS

TEMPERATURE (°C):	20.7
SPECIFIC CONDUCTANCE (µs/cm):	181
pH (Standard Units):	5.29
DISSOLVED OXYGEN (mg/L)	4.11
ORP (mV):	93.2

REASON FOR SAMPLING:	Cleanup Plan / Risk Assessment
ANALYSIS:	VOCs
CONTAINER:	2 x 40 mL amber vials
PRESERVATIVE:	HCl, ice
METHOD OF SHIPMENT:	ESC Courier to FedEx.

REMARKS

ESC - Environmental Science Corp.

^{o}C - degrees Celcius; µs/cm - micro Siemens per centimeter; mg/L - milligrams per Liter; mV - millivolts

ORP - Oxidation-Reduction Potential

VOCs- Volatile Organic Compounds

Office Location: Birmingham, AL.

Terracon provides Geotechnical, Environmental, Construction Materials, and Facilities Consulting Engineering Services delivered with responsiveness, resourcefulness, and reliability.

SITE:	Veros Energy	PROJECT #:	E1157122
WELL ID:	**MW-12**	DATE:	02/18/16
SAMPLE TYPE:	Grab	CITY, STATE	Moundville,AL
SAMPLED BY:	Anna Samuels	WEATHER:	Sunny, 50s

MONITORING WELL SAMPLING RECORD

WELL MEASUREMENT TIME:	0919
DEPTH TO WATER (feet):	27.73
TOTAL DEPTH OF WELL (feet):	36.71
WATER COLUMN (feet):	8.98
ONE WELL VOLUME (gal):	1.46
THREE WELL VOLUMES (gal):	4.39
ACTUAL GALLONS PURGED:	3.75 (dry)
PURGE TIME:	1015
METHOD OF PURGING:	Bailer
METHOD OF SAMPLING:	Bailer
SAMPLE COLLECTION TIME:	1024

INTRINSIC GROUNDWATER PARAMETERS

TEMPERATURE (°C):	19.3
SPECIFIC CONDUCTANCE (µs/cm):	257
pH (Standard Units):	5.54
DISSOLVED OXYGEN (mg/L)	2.76
ORP (mV):	-13.4

REASON FOR SAMPLING:	Cleanup Plan / Risk Assessment
ANALYSIS:	VOCs
CONTAINER:	2 x 40 mL amber vials
PRESERVATIVE:	HCl
METHOD OF SHIPMENT:	ESC Courier to FedEx.

REMARKS

Duplicate sample collected

^{o}C - degrees Celcius; µs/cm - micro Siemens per centimeter; mg/L - milligrams per Liter; mV - millivolts

ORP - Oxidation-Reduction Potential

VOCs- Volatile Organic Compounds

Office Location: Birmingham, AL.

Terracon provides Geotechnical, Environmental, Construction Materials, and Facilities Consulting Engineering Services delivered with responsiveness, resourcefulness, and reliability.

SITE:	Veros Energy	PROJECT #:	E1157122
WELL ID:	**MW-15**	DATE:	02/18/16
SAMPLE TYPE:	Grab	CITY, STATE	Moundville, AL
SAMPLED BY:	Anna Samuels and JD Naccari	WEATHER:	Sunny, 50s

MONITORING WELL SAMPLING RECORD

WELL MEASUREMENT TIME:	0934
DEPTH TO WATER (feet):	22.40
TOTAL DEPTH OF WELL (feet):	38.08
WATER COLUMN (feet):	15.68
ONE WELL VOLUME (gal):	2.56
THREE WELL VOLUMES (gal):	7.67
ACTUAL GALLONS PURGED:	7.0 (dry)
PURGE TIME:	936
METHOD OF PURGING:	Bailer
METHOD OF SAMPLING:	Bailer
SAMPLE COLLECTION TIME:	1000

INTRINSIC GROUNDWATER PARAMETERS

TEMPERATURE (°C):	18.9
SPECIFIC CONDUCANCE (µs/cm):	111
pH (Standard Units):	5.44
DISSOLVED OXYGEN (mg/L)	1.68
ORP (mV):	108.1

REASON FOR SAMPLING:	Cleanup Plan/ Risk Assessment
ANALYSIS:	VOCs
CONTAINER:	2 x 40 mL amber vials
PRESERVATIVE:	HCl, ice
METHOD OF SHIPMENT:	ESC Courier to FedEx.

REMARKS

ESC - Environmental Science Corp.

^{o}C - degrees Celcius; µs/cm - micro Siemens per centimeter; mg/L - milligrams per Liter; mV - millivolts

ORP - Oxidation-Reduction Potential

VOCs- Volatile Organic Compounds

APPENDIX B

ANALYTICAL REPORT

July 02, 2015

Terracon Consultants - B-Ham AL.

Sample Delivery Group:	L774269
Samples Received:	07/01/2015
Project Number:	1157122
Description:	Groundwater Monitoring
Site:	Veros Energy
Report To:	Trey Noland 110 12th Street North Birmingham, AL 35203

Entire Report Reviewed By:

Jimmy Hunt
Technical Service Representative

Results relate only to the items tested or calibrated and are reported as rounded values. This test report shall not be reproduced, except in full, without written approval of the laboratory. Where applicable, sampling conducted by ESC is performed per guidance provided in laboratory standard operating procedures: 060302, 060303, and 060304.

TABLE OF CONTENTS

[1]Cp: Cover Page 1

[2]Tc: Table of Contents 2

[3]Ss: Sample Summary 3

[4]Cn: Case Narrative 5

[5]Sr: Sample Results 6

MW-3 L774269-01 6

MW-4 L774269-02 10

MW-5D L774269-03 14

MW-8 L774269-04 18

MW-9 L774269-05 22

MW-11 L774269-06 26

MW-12 L774269-07 30

MW-15 L774269-08 34

DUPLICATE L774269-10 38

[6]Qc: Quality Control Summary 42

Mercury by Method 7470A 42

Metals (ICP) by Method 6010B 44

Volatile Organic Compounds (GC/MS) by Method 8260B 45

Semi Volatile Organic Compounds (GC/MS) by Method 8270C 52

[7]Gl: Glossary of Terms 64

[8]Al: Accreditations & Locations 65

[9]Sc: Chain of Custody 66

1 Cp
2 Tc
3 Ss
4 Cn
5 Sr
6 Qc
7 Gl
8 Al
9 Sc

MW-3 L774269-01 GW

Collected by: Brain Brown | Collected date/time: 06/29/15 15:05 | Received date/time: 07/01/15 09:00

Method	Batch	Dilution	Preparation date/time	Analysis date/time	Analysis Analyst
Mercury by Method 7470A	WG799696	1	07/01/15 14:56	07/02/15 11:18	CHM
Metals (ICP) by Method 6010B	WG799673	1	07/01/15 15:49	07/02/15 00:08	LTB
Semi Volatile Organic Compounds (GC/MS) by Method 8270C	WG799995	1	07/01/15 12:57	07/01/15 18:19	ADF
Semi Volatile Organic Compounds (GC/MS) by Method 8270C	WG799995	1	07/01/15 12:57	07/02/15 12:33	KMF
Volatile Organic Compounds (GC/MS) by Method 8260B	WG799832	1	07/02/15 09:58	07/02/15 09:58	MCB

MW-4 L774269-02 GW

Collected by: Brain Brown | Collected date/time: 06/29/15 15:15 | Received date/time: 07/01/15 09:00

Method	Batch	Dilution	Preparation date/time	Analysis date/time	Analysis Analyst
Mercury by Method 7470A	WG799696	1	07/01/15 14:56	07/02/15 11:33	CHM
Metals (ICP) by Method 6010B	WG799673	1	07/01/15 15:49	07/02/15 00:13	LTB
Semi Volatile Organic Compounds (GC/MS) by Method 8270C	WG799995	1	07/01/15 12:57	07/01/15 18:42	ADF
Semi Volatile Organic Compounds (GC/MS) by Method 8270C	WG799995	1	07/01/15 12:57	07/02/15 12:50	KMF
Volatile Organic Compounds (GC/MS) by Method 8260B	WG799832	1	07/02/15 10:18	07/02/15 10:18	MCB

MW-5D L774269-03 GW

Collected by: Brain Brown | Collected date/time: 06/29/15 13:55 | Received date/time: 07/01/15 09:00

Method	Batch	Dilution	Preparation date/time	Analysis date/time	Analysis Analyst
Mercury by Method 7470A	WG799696	1	07/01/15 14:56	07/02/15 11:36	CHM
Metals (ICP) by Method 6010B	WG799673	1	07/01/15 15:49	07/02/15 00:17	LTB
Semi Volatile Organic Compounds (GC/MS) by Method 8270C	WG799995	1	07/01/15 12:57	07/01/15 19:05	ADF
Semi Volatile Organic Compounds (GC/MS) by Method 8270C	WG799995	1	07/01/15 12:57	07/02/15 13:07	KMF
Volatile Organic Compounds (GC/MS) by Method 8260B	WG799832	1	07/02/15 10:38	07/02/15 10:38	MCB

MW-8 L774269-04 GW

Collected by: Brain Brown | Collected date/time: 06/29/15 14:17 | Received date/time: 07/01/15 09:00

Method	Batch	Dilution	Preparation date/time	Analysis date/time	Analysis Analyst
Mercury by Method 7470A	WG799696	1	07/01/15 14:56	07/02/15 11:39	CHM
Metals (ICP) by Method 6010B	WG799673	1	07/01/15 15:49	07/02/15 00:31	LTB
Semi Volatile Organic Compounds (GC/MS) by Method 8270C	WG799995	1	07/01/15 12:57	07/01/15 19:28	ADF
Semi Volatile Organic Compounds (GC/MS) by Method 8270C	WG799995	1	07/01/15 12:57	07/02/15 13:24	KMF
Volatile Organic Compounds (GC/MS) by Method 8260B	WG798776	5	07/02/15 15:12	07/02/15 15:12	KLO
Volatile Organic Compounds (GC/MS) by Method 8260B	WG799832	1	07/02/15 10:59	07/02/15 10:59	MCB

MW-9 L774269-05 GW

Collected by: Brain Brown | Collected date/time: 06/29/15 14:23 | Received date/time: 07/01/15 09:00

Method	Batch	Dilution	Preparation date/time	Analysis date/time	Analysis Analyst
Mercury by Method 7470A	WG799696	1	07/01/15 14:56	07/02/15 11:42	CHM
Metals (ICP) by Method 6010B	WG799673	1	07/01/15 15:49	07/02/15 00:36	LTB
Semi Volatile Organic Compounds (GC/MS) by Method 8270C	WG799995	1	07/01/15 12:57	07/01/15 19:51	ADF
Semi Volatile Organic Compounds (GC/MS) by Method 8270C	WG799995	1	07/01/15 12:57	07/02/15 13:42	KMF
Volatile Organic Compounds (GC/MS) by Method 8260B	WG798776	1	07/02/15 14:34	07/02/15 14:34	KLO
Volatile Organic Compounds (GC/MS) by Method 8260B	WG799832	1	07/02/15 11:19	07/02/15 11:19	MCB

MW-11 L774269-06 GW

Collected by: Brain Brown | Collected date/time: 06/29/15 14:41 | Received date/time: 07/01/15 09:00

Method	Batch	Dilution	Preparation date/time	Analysis date/time	Analysis Analyst
Mercury by Method 7470A	WG799696	1	07/01/15 14:56	07/02/15 11:45	CHM
Metals (ICP) by Method 6010B	WG799673	1	07/01/15 15:49	07/02/15 00:40	LTB
Semi Volatile Organic Compounds (GC/MS) by Method 8270C	WG799995	1	07/01/15 12:57	07/01/15 20:15	ADF
Semi Volatile Organic Compounds (GC/MS) by Method 8270C	WG799995	1	07/01/15 12:57	07/02/15 13:59	KMF
Semi Volatile Organic Compounds (GC/MS) by Method 8270C	WG799995	20	07/01/15 12:57	07/02/15 11:58	ADF
Volatile Organic Compounds (GC/MS) by Method 8260B	WG798776	10	07/02/15 15:31	07/02/15 15:31	KLO
Volatile Organic Compounds (GC/MS) by Method 8260B	WG799832	1	07/02/15 11:40	07/02/15 11:40	MCB

MW-12 L774269-07 GW

Collected by: Brain Brown | Collected date/time: 06/29/15 14:50 | Received date/time: 07/01/15 09:00

Method	Batch	Dilution	Preparation date/time	Analysis date/time	Analysis Analyst
Mercury by Method 7470A	WG799696	1	07/01/15 14:56	07/02/15 11:47	CHM
Metals (ICP) by Method 6010B	WG799673	1	07/01/15 15:49	07/02/15 00:45	LTB
Semi Volatile Organic Compounds (GC/MS) by Method 8270C	WG799995	1	07/01/15 12:57	07/01/15 20:38	ADF
Semi Volatile Organic Compounds (GC/MS) by Method 8270C	WG799995	1	07/01/15 12:57	07/02/15 14:16	KMF
Semi Volatile Organic Compounds (GC/MS) by Method 8270C	WG799995	20	07/01/15 12:57	07/02/15 12:22	ADF
Volatile Organic Compounds (GC/MS) by Method 8260B	WG798776	5	07/02/15 15:51	07/02/15 15:51	KLO
Volatile Organic Compounds (GC/MS) by Method 8260B	WG799832	1	07/02/15 12:00	07/02/15 12:00	MCB

MW-15 L774269-08 GW

Collected by: Brain Brown | Collected date/time: 06/29/15 15:35 | Received date/time: 07/01/15 09:00

Method	Batch	Dilution	Preparation date/time	Analysis date/time	Analysis Analyst
Mercury by Method 7470A	WG799696	1	07/01/15 14:56	07/02/15 11:50	CHM
Metals (ICP) by Method 6010B	WG799673	1	07/01/15 15:49	07/02/15 00:50	LTB
Semi Volatile Organic Compounds (GC/MS) by Method 8270C	WG799995	1	07/01/15 12:57	07/01/15 21:01	ADF
Semi Volatile Organic Compounds (GC/MS) by Method 8270C	WG799995	1	07/01/15 12:57	07/02/15 14:50	KMF
Volatile Organic Compounds (GC/MS) by Method 8260B	WG798776	1	07/02/15 14:53	07/02/15 14:53	KLO
Volatile Organic Compounds (GC/MS) by Method 8260B	WG799832	1	07/02/15 12:21	07/02/15 12:21	MCB

DUPLICATE L774269-10 GW

Collected by: Brain Brown | Collected date/time: 06/29/15 00:00 | Received date/time: 07/01/15 09:00

Method	Batch	Dilution	Preparation date/time	Analysis date/time	Analysis Analyst
Mercury by Method 7470A	WG799877	1	07/02/15 09:59	07/02/15 11:00	CHM
Metals (ICP) by Method 6010B	WG799673	1	07/01/15 15:49	07/02/15 00:54	LTB
Semi Volatile Organic Compounds (GC/MS) by Method 8270C	WG800005	1	07/01/15 16:33	07/02/15 14:33	KMF
Semi Volatile Organic Compounds (GC/MS) by Method 8270C	WG800005	1	07/01/15 16:33	07/02/15 15:50	ADF
Semi Volatile Organic Compounds (GC/MS) by Method 8270C	WG800005	20	07/01/15 16:33	07/02/15 12:45	ADF
Volatile Organic Compounds (GC/MS) by Method 8260B	WG798776	10	07/02/15 16:10	07/02/15 16:10	KLO
Volatile Organic Compounds (GC/MS) by Method 8260B	WG799832	1	07/02/15 12:42	07/02/15 12:42	MCB

1 Cp
2 Tc
3 Ss
4 Cn
5 Sr
6 Qc
7 Gl
8 Al
9 Sc

All sample aliquots were received at the correct temperature, in the proper containers, with the appropriate preservatives, and within method specified holding times. All Method and Batch Quality Control are within established criteria except where addressed in this case narrative, a non-conformance form or properly qualified within the sample results. By my digital signature below, I affirm to the best of my knowledge, all problems/anomalies observed by the laboratory as having the potential to affect the quality of the data have been identified by the laboratory, and no information or data have been knowingly withheld that would affect the quality of the data.

Jimmy Hunt

Jimmy Hunt
Technical Service Representative

Mercury by Method 7470A

Analyte	Result mg/l	Qualifier	RDL mg/l	Dilution	Analysis date / time	Batch
Mercury,Dissolved	ND		0.000200	1	07/02/2015 11:18	WG799696

Metals (ICP) by Method 6010B

Analyte	Result mg/l	Qualifier	RDL mg/l	Dilution	Analysis date / time	Batch
Arsenic,Dissolved	ND		0.0100	1	07/02/2015 00:08	WG799673
Barium,Dissolved	0.141		0.00500	1	07/02/2015 00:08	WG799673
Cadmium,Dissolved	ND		0.00200	1	07/02/2015 00:08	WG799673
Chromium,Dissolved	ND		0.0100	1	07/02/2015 00:08	WG799673
Lead,Dissolved	0.00695		0.00500	1	07/02/2015 00:08	WG799673
Selenium,Dissolved	ND		0.0100	1	07/02/2015 00:08	WG799673
Silver,Dissolved	ND		0.00500	1	07/02/2015 00:08	WG799673

Volatile Organic Compounds (GC/MS) by Method 8260B

Analyte	Result mg/l	Qualifier	RDL mg/l	Dilution	Analysis date / time	Batch
Acetone	ND		0.0500	1	07/02/2015 09:58	WG799832
Acrolein	ND		0.0500	1	07/02/2015 09:58	WG799832
Acrylonitrile	ND		0.0100	1	07/02/2015 09:58	WG799832
Benzene	ND		0.00100	1	07/02/2015 09:58	WG799832
Bromobenzene	ND		0.00100	1	07/02/2015 09:58	WG799832
Bromodichloromethane	ND		0.00100	1	07/02/2015 09:58	WG799832
Bromoform	ND	J4	0.00100	1	07/02/2015 09:58	WG799832
Bromomethane	ND		0.00500	1	07/02/2015 09:58	WG799832
n-Butylbenzene	ND		0.00100	1	07/02/2015 09:58	WG799832
sec-Butylbenzene	ND		0.00100	1	07/02/2015 09:58	WG799832
tert-Butylbenzene	ND		0.00100	1	07/02/2015 09:58	WG799832
Carbon tetrachloride	ND		0.00100	1	07/02/2015 09:58	WG799832
Chlorobenzene	ND		0.00100	1	07/02/2015 09:58	WG799832
Chlorodibromomethane	ND		0.00100	1	07/02/2015 09:58	WG799832
Chloroethane	ND		0.00500	1	07/02/2015 09:58	WG799832
2-Chloroethyl vinyl ether	ND		0.0500	1	07/02/2015 09:58	WG799832
Chloroform	ND		0.00500	1	07/02/2015 09:58	WG799832
Chloromethane	ND		0.00250	1	07/02/2015 09:58	WG799832
2-Chlorotoluene	ND		0.00100	1	07/02/2015 09:58	WG799832
4-Chlorotoluene	ND		0.00100	1	07/02/2015 09:58	WG799832
1,2-Dibromo-3-Chloropropane	ND		0.00500	1	07/02/2015 09:58	WG799832
1,2-Dibromoethane	ND		0.00100	1	07/02/2015 09:58	WG799832
Dibromomethane	ND		0.00100	1	07/02/2015 09:58	WG799832
1,2-Dichlorobenzene	ND		0.00100	1	07/02/2015 09:58	WG799832
1,3-Dichlorobenzene	ND		0.00100	1	07/02/2015 09:58	WG799832
1,4-Dichlorobenzene	ND		0.00100	1	07/02/2015 09:58	WG799832
Dichlorodifluoromethane	ND		0.00500	1	07/02/2015 09:58	WG799832
1,1-Dichloroethane	ND		0.00100	1	07/02/2015 09:58	WG799832
1,2-Dichloroethane	ND		0.00100	1	07/02/2015 09:58	WG799832
1,1-Dichloroethene	ND		0.00100	1	07/02/2015 09:58	WG799832
cis-1,2-Dichloroethene	ND		0.00100	1	07/02/2015 09:58	WG799832
trans-1,2-Dichloroethene	ND		0.00100	1	07/02/2015 09:58	WG799832
1,2-Dichloropropane	ND		0.00100	1	07/02/2015 09:58	WG799832
1,1-Dichloropropene	ND		0.00100	1	07/02/2015 09:58	WG799832
1,3-Dichloropropane	ND		0.00100	1	07/02/2015 09:58	WG799832
cis-1,3-Dichloropropene	ND		0.00100	1	07/02/2015 09:58	WG799832
trans-1,3-Dichloropropene	ND		0.00100	1	07/02/2015 09:58	WG799832
2,2-Dichloropropane	ND		0.00100	1	07/02/2015 09:58	WG799832
Dicyclopentadiene	0.00465		0.00100	1	07/02/2015 09:58	WG799832

Volatile Organic Compounds (GC/MS) by Method 8260B

Analyte	Result mg/l	Qualifier	RDL mg/l	Dilution	Analysis date / time	Batch
Di-isopropyl ether	ND		0.00100	1	07/02/2015 09:58	WG799832
Ethylbenzene	ND		0.00100	1	07/02/2015 09:58	WG799832
Hexachloro-1,3-butadiene	ND		0.00100	1	07/02/2015 09:58	WG799832
Isopropylbenzene	ND		0.00100	1	07/02/2015 09:58	WG799832
p-Isopropyltoluene	ND		0.00100	1	07/02/2015 09:58	WG799832
2-Butanone (MEK)	ND		0.0100	1	07/02/2015 09:58	WG799832
Methylene Chloride	ND		0.00500	1	07/02/2015 09:58	WG799832
4-Methyl-2-pentanone (MIBK)	ND		0.0100	1	07/02/2015 09:58	WG799832
Methyl tert-butyl ether	ND		0.00100	1	07/02/2015 09:58	WG799832
Naphthalene	ND		0.00500	1	07/02/2015 09:58	WG799832
n-Propylbenzene	ND		0.00100	1	07/02/2015 09:58	WG799832
Styrene	ND		0.00100	1	07/02/2015 09:58	WG799832
1,1,1,2-Tetrachloroethane	ND		0.00100	1	07/02/2015 09:58	WG799832
1,1,2,2-Tetrachloroethane	ND		0.00100	1	07/02/2015 09:58	WG799832
1,1,2-Trichlorotrifluoroethane	ND		0.00100	1	07/02/2015 09:58	WG799832
Tetrachloroethene	ND		0.00100	1	07/02/2015 09:58	WG799832
Toluene	ND		0.00500	1	07/02/2015 09:58	WG799832
1,2,3-Trichlorobenzene	ND		0.00100	1	07/02/2015 09:58	WG799832
1,2,4-Trichlorobenzene	ND		0.00100	1	07/02/2015 09:58	WG799832
1,1,1-Trichloroethane	ND		0.00100	1	07/02/2015 09:58	WG799832
1,1,2-Trichloroethane	ND		0.00100	1	07/02/2015 09:58	WG799832
Trichloroethene	ND		0.00100	1	07/02/2015 09:58	WG799832
Trichlorofluoromethane	ND		0.00500	1	07/02/2015 09:58	WG799832
1,2,3-Trichloropropane	ND		0.00250	1	07/02/2015 09:58	WG799832
1,2,4-Trimethylbenzene	ND		0.00100	1	07/02/2015 09:58	WG799832
1,2,3-Trimethylbenzene	ND		0.00100	1	07/02/2015 09:58	WG799832
1,3,5-Trimethylbenzene	ND		0.00100	1	07/02/2015 09:58	WG799832
Vinyl chloride	ND		0.00100	1	07/02/2015 09:58	WG799832
Xylenes, Total	ND		0.00300	1	07/02/2015 09:58	WG799832
(S) Toluene-d8	*104*		*90.0-115*		*07/02/2015 09:58*	WG799832
(S) Dibromofluoromethane	*94.5*		*79.0-121*		*07/02/2015 09:58*	WG799832
(S) 4-Bromofluorobenzene	*91.6*		*80.1-120*		*07/02/2015 09:58*	WG799832

Semi Volatile Organic Compounds (GC/MS) by Method 8270C

Analyte	Result mg/l	Qualifier	RDL mg/l	Dilution	Analysis date / time	Batch
Acenaphthene	ND		0.00100	1	07/01/2015 18:19	WG799995
Acenaphthylene	ND		0.00100	1	07/01/2015 18:19	WG799995
Anthracene	ND		0.00100	1	07/01/2015 18:19	WG799995
Benzo(a)anthracene	ND		0.00100	1	07/01/2015 18:19	WG799995
Benzo(b)fluoranthene	ND		0.00100	1	07/01/2015 18:19	WG799995
Benzo(k)fluoranthene	ND		0.00100	1	07/01/2015 18:19	WG799995
Benzo(g,h,i)perylene	ND		0.00100	1	07/01/2015 18:19	WG799995
Benzo(a)pyrene	ND		0.00100	1	07/01/2015 18:19	WG799995
Benzyl alcohol	ND		0.0100	1	07/01/2015 18:19	WG799995
Bis(2-chlorethoxy)methane	ND		0.0100	1	07/01/2015 18:19	WG799995
Bis(2-chloroethyl)ether	ND		0.0100	1	07/01/2015 18:19	WG799995
Bis(2-chloroisopropyl)ether	ND		0.0100	1	07/01/2015 18:19	WG799995
4-Bromophenyl-phenylether	ND		0.0100	1	07/01/2015 18:19	WG799995
4-Chloroaniline	ND		0.0100	1	07/01/2015 18:19	WG799995
2-Chloronaphthalene	ND		0.00100	1	07/01/2015 18:19	WG799995
4-Chlorophenyl-phenylether	ND		0.0100	1	07/01/2015 18:19	WG799995
Chrysene	ND		0.00100	1	07/01/2015 18:19	WG799995
Dibenz(a,h)anthracene	ND		0.00100	1	07/01/2015 18:19	WG799995
Dibenzofuran	ND		0.0100	1	07/01/2015 18:19	WG799995
3,3-Dichlorobenzidine	ND		0.0100	1	07/01/2015 18:19	WG799995

Semi Volatile Organic Compounds (GC/MS) by Method 8270C

Analyte	Result mg/l	Qualifier	RDL mg/l	Dilution	Analysis date / time	Batch
2,4-Dinitrotoluene	ND		0.0100	1	07/01/2015 18:19	WG799995
2,6-Dinitrotoluene	ND		0.0100	1	07/01/2015 18:19	WG799995
Fluoranthene	ND		0.00100	1	07/01/2015 18:19	WG799995
Fluorene	ND		0.00100	1	07/01/2015 18:19	WG799995
Hexachlorobenzene	ND		0.00100	1	07/01/2015 18:19	WG799995
Hexachloro-1,3-butadiene	ND		0.0100	1	07/01/2015 18:19	WG799995
Hexachlorocyclopentadiene	ND		0.0100	1	07/01/2015 18:19	WG799995
Hexachloroethane	ND		0.0100	1	07/01/2015 18:19	WG799995
Indeno(1,2,3-cd)pyrene	ND		0.00100	1	07/01/2015 18:19	WG799995
Isophorone	ND		0.0100	1	07/01/2015 18:19	WG799995
2-Methylnaphthalene	ND		0.00100	1	07/01/2015 18:19	WG799995
Naphthalene	0.00416		0.00100	1	07/01/2015 18:19	WG799995
2-Nitroaniline	ND		0.0100	1	07/01/2015 18:19	WG799995
3-Nitroaniline	ND		0.0100	1	07/01/2015 18:19	WG799995
4-Nitroaniline	ND		0.0100	1	07/01/2015 18:19	WG799995
Nitrobenzene	ND		0.0100	1	07/01/2015 18:19	WG799995
n-Nitrosodiphenylamine	ND		0.0100	1	07/01/2015 18:19	WG799995
n-Nitrosodi-n-propylamine	ND		0.0100	1	07/01/2015 18:19	WG799995
Phenanthrene	ND		0.00100	1	07/01/2015 18:19	WG799995
Benzylbutyl phthalate	ND		0.00300	1	07/01/2015 18:19	WG799995
Bis(2-ethylhexyl)phthalate	ND		0.00300	1	07/01/2015 18:19	WG799995
Di-n-butyl phthalate	ND		0.00300	1	07/01/2015 18:19	WG799995
Diethyl phthalate	ND		0.00300	1	07/01/2015 18:19	WG799995
Dimethyl phthalate	ND		0.00300	1	07/01/2015 18:19	WG799995
Di-n-octyl phthalate	ND		0.00300	1	07/01/2015 18:19	WG799995
Pyrene	ND		0.00100	1	07/01/2015 18:19	WG799995
1,2,4-Trichlorobenzene	ND		0.0100	1	07/01/2015 18:19	WG799995
4-Chloro-3-methylphenol	ND		0.0100	1	07/01/2015 18:19	WG799995
2-Chlorophenol	ND		0.0100	1	07/01/2015 18:19	WG799995
2-Methylphenol	ND		0.0100	1	07/01/2015 18:19	WG799995
3&4-Methyl Phenol	ND		0.0100	1	07/01/2015 18:19	WG799995
2,4-Dichlorophenol	ND		0.0100	1	07/01/2015 18:19	WG799995
2,4-Dimethylphenol	ND		0.0100	1	07/01/2015 18:19	WG799995
4,6-Dinitro-2-methylphenol	ND		0.0100	1	07/01/2015 18:19	WG799995
2,4-Dinitrophenol	ND		0.0100	1	07/01/2015 18:19	WG799995
2-Nitrophenol	ND		0.0100	1	07/01/2015 18:19	WG799995
4-Nitrophenol	ND		0.0100	1	07/01/2015 18:19	WG799995
Pentachlorophenol	ND		0.00100	1	07/01/2015 18:19	WG799995
Phenol	ND		0.0100	1	07/01/2015 18:19	WG799995
2,4,5-Trichlorophenol	ND		0.0100	1	07/01/2015 18:19	WG799995
2,4,6-Trichlorophenol	ND		0.0100	1	07/01/2015 18:19	WG799995
Acetophenone	ND		0.0100	1	07/01/2015 18:19	WG799995
2-Acetylaminofluorene	ND		0.0100	1	07/02/2015 12:33	WG799995
4-Aminobiphenyl	ND		0.0100	1	07/02/2015 12:33	WG799995
Chlorobenzilate	ND		0.0500	1	07/02/2015 12:33	WG799995
Diallate	ND		0.0100	1	07/02/2015 12:33	WG799995
Dinoseb	ND		0.0500	1	07/02/2015 12:33	WG799995
Ethyl methanesulfonate	ND		0.0100	1	07/02/2015 12:33	WG799995
Famphur	ND		0.0200	1	07/02/2015 12:33	WG799995
Hexachloropropene	ND		0.0500	1	07/02/2015 12:33	WG799995
Isodrin	ND		0.0100	1	07/02/2015 12:33	WG799995
Isosafrole	ND		0.0100	1	07/02/2015 12:33	WG799995
Kepone	ND		0.0200	1	07/02/2015 12:33	WG799995
Methapyrilene	ND		0.0500	1	07/02/2015 12:33	WG799995
3-Methylcholanthrene	ND		0.0100	1	07/02/2015 12:33	WG799995
Methyl methanesulfonate	ND		0.0500	1	07/02/2015 12:33	WG799995

Semi Volatile Organic Compounds (GC/MS) by Method 8270C

Analyte	Result mg/l	Qualifier	RDL mg/l	Dilution	Analysis date / time	Batch
Methyl parathion	ND		0.0100	1	07/02/2015 12:33	WG799995
1,4-Naphthoquinone	ND		0.0500	1	07/02/2015 12:33	WG799995
1-Naphthylamine	ND		0.0100	1	07/02/2015 12:33	WG799995
2-Naphthylamine	ND		0.0100	1	07/02/2015 12:33	WG799995
n-Nitrosodi-n-butylamine	ND		0.0100	1	07/02/2015 12:33	WG799995
n-Nitrosodiethylamine	ND		0.0100	1	07/02/2015 12:33	WG799995
n-Nitrosodimethylamine	ND		0.0100	1	07/01/2015 18:19	WG799995
n-Nitrosomethylethylamine	ND		0.0100	1	07/02/2015 12:33	WG799995
N-Nitrosomorpholine	ND		0.0100	1	07/02/2015 12:33	WG799995
n-Nitrosopiperidine	ND		0.0100	1	07/02/2015 12:33	WG799995
n-Nitrosopyrrolidine	ND		0.0100	1	07/02/2015 12:33	WG799995
5-Nitro-o-toluidine	ND		0.0100	1	07/02/2015 12:33	WG799995
Ethyl Parathion	ND		0.0100	1	07/02/2015 12:33	WG799995
Pentachlorobenzene	ND		0.0100	1	07/02/2015 12:33	WG799995
Pentachloronitrobenzene	ND		0.0100	1	07/02/2015 12:33	WG799995
Phenacetin	ND		0.0100	1	07/02/2015 12:33	WG799995
p-Phenylenediamine	ND		6.90	1	07/02/2015 12:33	WG799995
Phorate	ND		0.0500	1	07/02/2015 12:33	WG799995
Pronamide	ND		0.0100	1	07/02/2015 12:33	WG799995
Dimethoate	ND		0.0500	1	07/02/2015 12:33	WG799995
P-(Dimethylamino) Azobenzene	ND		0.0100	1	07/02/2015 12:33	WG799995
Dimethylbenz (A) Anthracene	ND		0.0100	1	07/02/2015 12:33	WG799995
3,3-Dimethylbenzidine	ND		0.0100	1	07/02/2015 12:33	WG799995
1,3-Dinitrobenzene	ND		0.0100	1	07/02/2015 12:33	WG799995
Diphenylamine	ND		0.0100	1	07/02/2015 12:33	WG799995
Disulfoton	ND		0.0100	1	07/02/2015 12:33	WG799995
Safrole	ND		0.0100	1	07/02/2015 12:33	WG799995
Thionazin	ND		0.0100	1	07/02/2015 12:33	WG799995
o-Toluidine	ND		0.0100	1	07/02/2015 12:33	WG799995
O,O,O-Triethyl phosphorothioate	ND		0.0100	1	07/02/2015 12:33	WG799995
1,3,5-Trinitrobenzene	ND		0.0100	1	07/02/2015 12:33	WG799995
1,2,4,5-Tetrachlorobenzene	ND		0.0100	1	07/01/2015 18:19	WG799995
2,6-Dichlorophenol	ND		0.0100	1	07/02/2015 12:33	WG799995
2,3,4,6-Tetrachlorophenol	ND		0.0100	1	07/01/2015 18:19	WG799995
(S) 2-Fluorophenol	*56.2*		*10.0-77.9*		*07/01/2015 18:19*	WG799995
(S) Phenol-d5	*38.5*		*5.00-70.1*		*07/01/2015 18:19*	WG799995
(S) Nitrobenzene-d5	*66.0*		*21.8-123*		*07/01/2015 18:19*	WG799995
(S) 2-Fluorobiphenyl	*73.2*		*29.5-131*		*07/01/2015 18:19*	WG799995
(S) 2,4,6-Tribromophenol	*78.2*		*11.2-130*		*07/01/2015 18:19*	WG799995
(S) p-Terphenyl-d14	*73.6*		*29.3-137*		*07/01/2015 18:19*	WG799995

Mercury by Method 7470A

Analyte	Result mg/l	Qualifier	RDL mg/l	Dilution	Analysis date / time	Batch
Mercury,Dissolved	ND		0.000200	1	07/02/2015 11:33	WG799696

Metals (ICP) by Method 6010B

Analyte	Result mg/l	Qualifier	RDL mg/l	Dilution	Analysis date / time	Batch
Arsenic,Dissolved	ND		0.0100	1	07/02/2015 00:13	WG799673
Barium,Dissolved	0.118		0.00500	1	07/02/2015 00:13	WG799673
Cadmium,Dissolved	ND		0.00200	1	07/02/2015 00:13	WG799673
Chromium,Dissolved	ND		0.0100	1	07/02/2015 00:13	WG799673
Lead,Dissolved	ND		0.00500	1	07/02/2015 00:13	WG799673
Selenium,Dissolved	ND		0.0100	1	07/02/2015 00:13	WG799673
Silver,Dissolved	ND		0.00500	1	07/02/2015 00:13	WG799673

Volatile Organic Compounds (GC/MS) by Method 8260B

Analyte	Result mg/l	Qualifier	RDL mg/l	Dilution	Analysis date / time	Batch
Acetone	ND		0.0500	1	07/02/2015 10:18	WG799832
Acrolein	ND		0.0500	1	07/02/2015 10:18	WG799832
Acrylonitrile	ND		0.0100	1	07/02/2015 10:18	WG799832
Benzene	0.00110		0.00100	1	07/02/2015 10:18	WG799832
Bromobenzene	ND		0.00100	1	07/02/2015 10:18	WG799832
Bromodichloromethane	ND		0.00100	1	07/02/2015 10:18	WG799832
Bromoform	ND	J4	0.00100	1	07/02/2015 10:18	WG799832
Bromomethane	ND		0.00500	1	07/02/2015 10:18	WG799832
n-Butylbenzene	ND		0.00100	1	07/02/2015 10:18	WG799832
sec-Butylbenzene	ND		0.00100	1	07/02/2015 10:18	WG799832
tert-Butylbenzene	ND		0.00100	1	07/02/2015 10:18	WG799832
Carbon tetrachloride	ND		0.00100	1	07/02/2015 10:18	WG799832
Chlorobenzene	ND		0.00100	1	07/02/2015 10:18	WG799832
Chlorodibromomethane	ND		0.00100	1	07/02/2015 10:18	WG799832
Chloroethane	ND		0.00500	1	07/02/2015 10:18	WG799832
2-Chloroethyl vinyl ether	ND		0.0500	1	07/02/2015 10:18	WG799832
Chloroform	ND		0.00500	1	07/02/2015 10:18	WG799832
Chloromethane	ND		0.00250	1	07/02/2015 10:18	WG799832
2-Chlorotoluene	ND		0.00100	1	07/02/2015 10:18	WG799832
4-Chlorotoluene	ND		0.00100	1	07/02/2015 10:18	WG799832
1,2-Dibromo-3-Chloropropane	ND		0.00500	1	07/02/2015 10:18	WG799832
1,2-Dibromoethane	ND		0.00100	1	07/02/2015 10:18	WG799832
Dibromomethane	ND		0.00100	1	07/02/2015 10:18	WG799832
1,2-Dichlorobenzene	ND		0.00100	1	07/02/2015 10:18	WG799832
1,3-Dichlorobenzene	ND		0.00100	1	07/02/2015 10:18	WG799832
1,4-Dichlorobenzene	ND		0.00100	1	07/02/2015 10:18	WG799832
Dichlorodifluoromethane	ND		0.00500	1	07/02/2015 10:18	WG799832
1,1-Dichloroethane	ND		0.00100	1	07/02/2015 10:18	WG799832
1,2-Dichloroethane	ND		0.00100	1	07/02/2015 10:18	WG799832
1,1-Dichloroethene	ND		0.00100	1	07/02/2015 10:18	WG799832
cis-1,2-Dichloroethene	ND		0.00100	1	07/02/2015 10:18	WG799832
trans-1,2-Dichloroethene	ND		0.00100	1	07/02/2015 10:18	WG799832
1,2-Dichloropropane	ND		0.00100	1	07/02/2015 10:18	WG799832
1,1-Dichloropropene	ND		0.00100	1	07/02/2015 10:18	WG799832
1,3-Dichloropropane	ND		0.00100	1	07/02/2015 10:18	WG799832
cis-1,3-Dichloropropene	ND		0.00100	1	07/02/2015 10:18	WG799832
trans-1,3-Dichloropropene	ND		0.00100	1	07/02/2015 10:18	WG799832
2,2-Dichloropropane	ND		0.00100	1	07/02/2015 10:18	WG799832
Dicyclopentadiene	0.0139		0.00100	1	07/02/2015 10:18	WG799832

Volatile Organic Compounds (GC/MS) by Method 8260B

Analyte	Result mg/l	Qualifier	RDL mg/l	Dilution	Analysis date / time	Batch
Di-isopropyl ether	ND		0.00100	1	07/02/2015 10:18	WG799832
Ethylbenzene	ND		0.00100	1	07/02/2015 10:18	WG799832
Hexachloro-1,3-butadiene	ND		0.00100	1	07/02/2015 10:18	WG799832
Isopropylbenzene	ND		0.00100	1	07/02/2015 10:18	WG799832
p-Isopropyltoluene	ND		0.00100	1	07/02/2015 10:18	WG799832
2-Butanone (MEK)	ND		0.0100	1	07/02/2015 10:18	WG799832
Methylene Chloride	ND		0.00500	1	07/02/2015 10:18	WG799832
4-Methyl-2-pentanone (MIBK)	ND		0.0100	1	07/02/2015 10:18	WG799832
Methyl tert-butyl ether	ND		0.00100	1	07/02/2015 10:18	WG799832
Naphthalene	ND		0.00500	1	07/02/2015 10:18	WG799832
n-Propylbenzene	ND		0.00100	1	07/02/2015 10:18	WG799832
Styrene	ND		0.00100	1	07/02/2015 10:18	WG799832
1,1,1,2-Tetrachloroethane	ND		0.00100	1	07/02/2015 10:18	WG799832
1,1,2,2-Tetrachloroethane	ND		0.00100	1	07/02/2015 10:18	WG799832
1,1,2-Trichlorotrifluoroethane	ND		0.00100	1	07/02/2015 10:18	WG799832
Tetrachloroethene	ND		0.00100	1	07/02/2015 10:18	WG799832
Toluene	ND		0.00500	1	07/02/2015 10:18	WG799832
1,2,3-Trichlorobenzene	ND		0.00100	1	07/02/2015 10:18	WG799832
1,2,4-Trichlorobenzene	ND		0.00100	1	07/02/2015 10:18	WG799832
1,1,1-Trichloroethane	ND		0.00100	1	07/02/2015 10:18	WG799832
1,1,2-Trichloroethane	ND		0.00100	1	07/02/2015 10:18	WG799832
Trichloroethene	ND		0.00100	1	07/02/2015 10:18	WG799832
Trichlorofluoromethane	ND		0.00500	1	07/02/2015 10:18	WG799832
1,2,3-Trichloropropane	ND		0.00250	1	07/02/2015 10:18	WG799832
1,2,4-Trimethylbenzene	ND		0.00100	1	07/02/2015 10:18	WG799832
1,2,3-Trimethylbenzene	ND		0.00100	1	07/02/2015 10:18	WG799832
1,3,5-Trimethylbenzene	ND		0.00100	1	07/02/2015 10:18	WG799832
Vinyl chloride	ND		0.00100	1	07/02/2015 10:18	WG799832
Xylenes, Total	ND		0.00300	1	07/02/2015 10:18	WG799832
(S) Toluene-d8	*104*		*90.0-115*		*07/02/2015 10:18*	WG799832
(S) Dibromofluoromethane	*95.6*		*79.0-121*		*07/02/2015 10:18*	WG799832
(S) 4-Bromofluorobenzene	*92.6*		*80.1-120*		*07/02/2015 10:18*	WG799832

Semi Volatile Organic Compounds (GC/MS) by Method 8270C

Analyte	Result mg/l	Qualifier	RDL mg/l	Dilution	Analysis date / time	Batch
Acenaphthene	ND		0.00100	1	07/01/2015 18:42	WG799995
Acenaphthylene	ND		0.00100	1	07/01/2015 18:42	WG799995
Anthracene	ND		0.00100	1	07/01/2015 18:42	WG799995
Benzo(a)anthracene	ND		0.00100	1	07/01/2015 18:42	WG799995
Benzo(b)fluoranthene	ND		0.00100	1	07/01/2015 18:42	WG799995
Benzo(k)fluoranthene	ND		0.00100	1	07/01/2015 18:42	WG799995
Benzo(g,h,i)perylene	ND		0.00100	1	07/01/2015 18:42	WG799995
Benzo(a)pyrene	ND		0.00100	1	07/01/2015 18:42	WG799995
Benzyl alcohol	ND		0.0100	1	07/01/2015 18:42	WG799995
Bis(2-chlorethoxy)methane	ND		0.0100	1	07/01/2015 18:42	WG799995
Bis(2-chloroethyl)ether	ND		0.0100	1	07/01/2015 18:42	WG799995
Bis(2-chloroisopropyl)ether	ND		0.0100	1	07/01/2015 18:42	WG799995
4-Bromophenyl-phenylether	ND		0.0100	1	07/01/2015 18:42	WG799995
4-Chloroaniline	ND		0.0100	1	07/01/2015 18:42	WG799995
2-Chloronaphthalene	ND		0.00100	1	07/01/2015 18:42	WG799995
4-Chlorophenyl-phenylether	ND		0.0100	1	07/01/2015 18:42	WG799995
Chrysene	ND		0.00100	1	07/01/2015 18:42	WG799995
Dibenz(a,h)anthracene	ND		0.00100	1	07/01/2015 18:42	WG799995
Dibenzofuran	ND		0.0100	1	07/01/2015 18:42	WG799995
3,3-Dichlorobenzidine	ND		0.0100	1	07/01/2015 18:42	WG799995

Semi Volatile Organic Compounds (GC/MS) by Method 8270C

Analyte	Result mg/l	Qualifier	RDL mg/l	Dilution	Analysis date / time	Batch
2,4-Dinitrotoluene	ND		0.0100	1	07/01/2015 18:42	WG799995
2,6-Dinitrotoluene	ND		0.0100	1	07/01/2015 18:42	WG799995
Fluoranthene	ND		0.00100	1	07/01/2015 18:42	WG799995
Fluorene	ND		0.00100	1	07/01/2015 18:42	WG799995
Hexachlorobenzene	ND		0.00100	1	07/01/2015 18:42	WG799995
Hexachloro-1,3-butadiene	ND		0.0100	1	07/01/2015 18:42	WG799995
Hexachlorocyclopentadiene	ND		0.0100	1	07/01/2015 18:42	WG799995
Hexachloroethane	ND		0.0100	1	07/01/2015 18:42	WG799995
Indeno(1,2,3-cd)pyrene	ND		0.00100	1	07/01/2015 18:42	WG799995
Isophorone	ND		0.0100	1	07/01/2015 18:42	WG799995
2-Methylnaphthalene	ND		0.00100	1	07/01/2015 18:42	WG799995
Naphthalene	ND		0.00100	1	07/01/2015 18:42	WG799995
2-Nitroaniline	ND		0.0100	1	07/01/2015 18:42	WG799995
3-Nitroaniline	ND		0.0100	1	07/01/2015 18:42	WG799995
4-Nitroaniline	ND		0.0100	1	07/01/2015 18:42	WG799995
Nitrobenzene	ND		0.0100	1	07/01/2015 18:42	WG799995
n-Nitrosodiphenylamine	ND		0.0100	1	07/01/2015 18:42	WG799995
n-Nitrosodi-n-propylamine	ND		0.0100	1	07/01/2015 18:42	WG799995
Phenanthrene	ND		0.00100	1	07/01/2015 18:42	WG799995
Benzylbutyl phthalate	ND		0.00300	1	07/01/2015 18:42	WG799995
Bis(2-ethylhexyl)phthalate	ND		0.00300	1	07/01/2015 18:42	WG799995
Di-n-butyl phthalate	ND		0.00300	1	07/01/2015 18:42	WG799995
Diethyl phthalate	ND		0.00300	1	07/01/2015 18:42	WG799995
Dimethyl phthalate	ND		0.00300	1	07/01/2015 18:42	WG799995
Di-n-octyl phthalate	ND		0.00300	1	07/01/2015 18:42	WG799995
Pyrene	ND		0.00100	1	07/01/2015 18:42	WG799995
1,2,4-Trichlorobenzene	ND		0.0100	1	07/01/2015 18:42	WG799995
4-Chloro-3-methylphenol	ND		0.0100	1	07/01/2015 18:42	WG799995
2-Chlorophenol	ND		0.0100	1	07/01/2015 18:42	WG799995
2-Methylphenol	ND		0.0100	1	07/01/2015 18:42	WG799995
3&4-Methyl Phenol	ND		0.0100	1	07/01/2015 18:42	WG799995
2,4-Dichlorophenol	ND		0.0100	1	07/01/2015 18:42	WG799995
2,4-Dimethylphenol	ND		0.0100	1	07/01/2015 18:42	WG799995
4,6-Dinitro-2-methylphenol	ND		0.0100	1	07/01/2015 18:42	WG799995
2,4-Dinitrophenol	ND		0.0100	1	07/01/2015 18:42	WG799995
2-Nitrophenol	ND		0.0100	1	07/01/2015 18:42	WG799995
4-Nitrophenol	ND		0.0100	1	07/01/2015 18:42	WG799995
Pentachlorophenol	ND		0.00100	1	07/01/2015 18:42	WG799995
Phenol	ND		0.0100	1	07/01/2015 18:42	WG799995
2,4,5-Trichlorophenol	ND		0.0100	1	07/01/2015 18:42	WG799995
2,4,6-Trichlorophenol	ND		0.0100	1	07/01/2015 18:42	WG799995
Acetophenone	ND		0.0100	1	07/01/2015 18:42	WG799995
2-Acetylaminofluorene	ND		0.0100	1	07/02/2015 12:50	WG799995
4-Aminobiphenyl	ND		0.0100	1	07/02/2015 12:50	WG799995
Chlorobenzilate	ND		0.0500	1	07/02/2015 12:50	WG799995
Diallate	ND		0.0100	1	07/02/2015 12:50	WG799995
Dinoseb	ND		0.0500	1	07/02/2015 12:50	WG799995
Ethyl methanesulfonate	ND		0.0100	1	07/02/2015 12:50	WG799995
Famphur	ND		0.0200	1	07/02/2015 12:50	WG799995
Hexachloropropene	ND		0.0500	1	07/02/2015 12:50	WG799995
Isodrin	ND		0.0100	1	07/02/2015 12:50	WG799995
Isosafrole	ND		0.0100	1	07/02/2015 12:50	WG799995
Kepone	ND		0.0200	1	07/02/2015 12:50	WG799995
Methapyrilene	ND		0.0500	1	07/02/2015 12:50	WG799995
3-Methylcholanthrene	ND		0.0100	1	07/02/2015 12:50	WG799995
Methyl methanesulfonate	ND		0.0500	1	07/02/2015 12:50	WG799995

Semi Volatile Organic Compounds (GC/MS) by Method 8270C

Analyte	Result mg/l	Qualifier	RDL mg/l	Dilution	Analysis date / time	Batch
Methyl parathion	ND		0.0100	1	07/02/2015 12:50	WG799995
1,4-Naphthoquinone	ND		0.0500	1	07/02/2015 12:50	WG799995
1-Naphthylamine	ND		0.0100	1	07/02/2015 12:50	WG799995
2-Naphthylamine	ND		0.0100	1	07/02/2015 12:50	WG799995
n-Nitrosodi-n-butylamine	ND		0.0100	1	07/02/2015 12:50	WG799995
n-Nitrosodiethylamine	ND		0.0100	1	07/02/2015 12:50	WG799995
n-Nitrosodimethylamine	ND		0.0100	1	07/01/2015 18:42	WG799995
n-Nitrosomethylethylamine	ND		0.0100	1	07/02/2015 12:50	WG799995
N-Nitrosomorpholine	ND		0.0100	1	07/02/2015 12:50	WG799995
n-Nitrosopiperidine	ND		0.0100	1	07/02/2015 12:50	WG799995
n-Nitrosopyrrolidine	ND		0.0100	1	07/02/2015 12:50	WG799995
5-Nitro-o-toluidine	ND		0.0100	1	07/02/2015 12:50	WG799995
Ethyl Parathion	ND		0.0100	1	07/02/2015 12:50	WG799995
Pentachlorobenzene	ND		0.0100	1	07/02/2015 12:50	WG799995
Pentachloronitrobenzene	ND		0.0100	1	07/02/2015 12:50	WG799995
Phenacetin	ND		0.0100	1	07/02/2015 12:50	WG799995
p-Phenylenediamine	ND		6.90	1	07/02/2015 12:50	WG799995
Phorate	ND		0.0500	1	07/02/2015 12:50	WG799995
Pronamide	ND		0.0100	1	07/02/2015 12:50	WG799995
Dimethoate	ND		0.0500	1	07/02/2015 12:50	WG799995
P-(Dimethylamino) Azobenzene	ND		0.0100	1	07/02/2015 12:50	WG799995
Dimethylbenz (A) Anthracene	ND		0.0100	1	07/02/2015 12:50	WG799995
3,3-Dimethylbenzidine	ND		0.0100	1	07/02/2015 12:50	WG799995
1,3-Dinitrobenzene	ND		0.0100	1	07/02/2015 12:50	WG799995
Diphenylamine	ND		0.0100	1	07/02/2015 12:50	WG799995
Disulfoton	ND		0.0100	1	07/02/2015 12:50	WG799995
Safrole	ND		0.0100	1	07/02/2015 12:50	WG799995
Thionazin	ND		0.0100	1	07/02/2015 12:50	WG799995
o-Toluidine	ND		0.0100	1	07/02/2015 12:50	WG799995
O,O,O-Triethyl phosphorothioate	ND		0.0100	1	07/02/2015 12:50	WG799995
1,3,5-Trinitrobenzene	ND		0.0100	1	07/02/2015 12:50	WG799995
1,2,4,5-Tetrachlorobenzene	ND		0.0100	1	07/01/2015 18:42	WG799995
2,6-Dichlorophenol	ND		0.0100	1	07/02/2015 12:50	WG799995
2,3,4,6-Tetrachlorophenol	ND		0.0100	1	07/01/2015 18:42	WG799995
(S) 2-Fluorophenol	*55.2*		*10.0-77.9*		*07/01/2015 18:42*	WG799995
(S) Phenol-d5	*37.6*		*5.00-70.1*		*07/01/2015 18:42*	WG799995
(S) Nitrobenzene-d5	*68.8*		*21.8-123*		*07/01/2015 18:42*	WG799995
(S) 2-Fluorobiphenyl	*72.8*		*29.5-131*		*07/01/2015 18:42*	WG799995
(S) 2,4,6-Tribromophenol	*78.0*		*11.2-130*		*07/01/2015 18:42*	WG799995
(S) p-Terphenyl-d14	*73.4*		*29.3-137*		*07/01/2015 18:42*	WG799995

Mercury by Method 7470A

Analyte	Result mg/l	Qualifier	RDL mg/l	Dilution	Analysis date / time	Batch
Mercury,Dissolved	ND		0.000200	1	07/02/2015 11:36	WG799696

Metals (ICP) by Method 6010B

Analyte	Result mg/l	Qualifier	RDL mg/l	Dilution	Analysis date / time	Batch
Arsenic,Dissolved	ND		0.0100	1	07/02/2015 00:17	WG799673
Barium,Dissolved	0.181		0.00500	1	07/02/2015 00:17	WG799673
Cadmium,Dissolved	ND		0.00200	1	07/02/2015 00:17	WG799673
Chromium,Dissolved	ND		0.0100	1	07/02/2015 00:17	WG799673
Lead,Dissolved	0.00903		0.00500	1	07/02/2015 00:17	WG799673
Selenium,Dissolved	ND		0.0100	1	07/02/2015 00:17	WG799673
Silver,Dissolved	ND		0.00500	1	07/02/2015 00:17	WG799673

Volatile Organic Compounds (GC/MS) by Method 8260B

Analyte	Result mg/l	Qualifier	RDL mg/l	Dilution	Analysis date / time	Batch
Acetone	ND		0.0500	1	07/02/2015 10:38	WG799832
Acrolein	ND		0.0500	1	07/02/2015 10:38	WG799832
Acrylonitrile	ND		0.0100	1	07/02/2015 10:38	WG799832
Benzene	0.00135		0.00100	1	07/02/2015 10:38	WG799832
Bromobenzene	ND		0.00100	1	07/02/2015 10:38	WG799832
Bromodichloromethane	ND		0.00100	1	07/02/2015 10:38	WG799832
Bromoform	ND	J4	0.00100	1	07/02/2015 10:38	WG799832
Bromomethane	ND		0.00500	1	07/02/2015 10:38	WG799832
n-Butylbenzene	ND		0.00100	1	07/02/2015 10:38	WG799832
sec-Butylbenzene	ND		0.00100	1	07/02/2015 10:38	WG799832
tert-Butylbenzene	ND		0.00100	1	07/02/2015 10:38	WG799832
Carbon tetrachloride	ND		0.00100	1	07/02/2015 10:38	WG799832
Chlorobenzene	ND		0.00100	1	07/02/2015 10:38	WG799832
Chlorodibromomethane	ND		0.00100	1	07/02/2015 10:38	WG799832
Chloroethane	ND		0.00500	1	07/02/2015 10:38	WG799832
2-Chloroethyl vinyl ether	ND		0.0500	1	07/02/2015 10:38	WG799832
Chloroform	ND		0.00500	1	07/02/2015 10:38	WG799832
Chloromethane	ND		0.00250	1	07/02/2015 10:38	WG799832
2-Chlorotoluene	ND		0.00100	1	07/02/2015 10:38	WG799832
4-Chlorotoluene	ND		0.00100	1	07/02/2015 10:38	WG799832
1,2-Dibromo-3-Chloropropane	ND		0.00500	1	07/02/2015 10:38	WG799832
1,2-Dibromoethane	ND		0.00100	1	07/02/2015 10:38	WG799832
Dibromomethane	ND		0.00100	1	07/02/2015 10:38	WG799832
1,2-Dichlorobenzene	ND		0.00100	1	07/02/2015 10:38	WG799832
1,3-Dichlorobenzene	ND		0.00100	1	07/02/2015 10:38	WG799832
1,4-Dichlorobenzene	ND		0.00100	1	07/02/2015 10:38	WG799832
Dichlorodifluoromethane	ND		0.00500	1	07/02/2015 10:38	WG799832
1,1-Dichloroethane	ND		0.00100	1	07/02/2015 10:38	WG799832
1,2-Dichloroethane	ND		0.00100	1	07/02/2015 10:38	WG799832
1,1-Dichloroethene	ND		0.00100	1	07/02/2015 10:38	WG799832
cis-1,2-Dichloroethene	ND		0.00100	1	07/02/2015 10:38	WG799832
trans-1,2-Dichloroethene	ND		0.00100	1	07/02/2015 10:38	WG799832
1,2-Dichloropropane	ND		0.00100	1	07/02/2015 10:38	WG799832
1,1-Dichloropropene	ND		0.00100	1	07/02/2015 10:38	WG799832
1,3-Dichloropropane	ND		0.00100	1	07/02/2015 10:38	WG799832
cis-1,3-Dichloropropene	ND		0.00100	1	07/02/2015 10:38	WG799832
trans-1,3-Dichloropropene	ND		0.00100	1	07/02/2015 10:38	WG799832
2,2-Dichloropropane	ND		0.00100	1	07/02/2015 10:38	WG799832
Dicyclopentadiene	ND		0.00100	1	07/02/2015 10:38	WG799832

Volatile Organic Compounds (GC/MS) by Method 8260B

Analyte	Result mg/l	Qualifier	RDL mg/l	Dilution	Analysis date / time	Batch
Di-isopropyl ether	ND		0.00100	1	07/02/2015 10:38	WG799832
Ethylbenzene	0.00427		0.00100	1	07/02/2015 10:38	WG799832
Hexachloro-1,3-butadiene	ND		0.00100	1	07/02/2015 10:38	WG799832
Isopropylbenzene	ND		0.00100	1	07/02/2015 10:38	WG799832
p-Isopropyltoluene	ND		0.00100	1	07/02/2015 10:38	WG799832
2-Butanone (MEK)	ND		0.0100	1	07/02/2015 10:38	WG799832
Methylene Chloride	ND		0.00500	1	07/02/2015 10:38	WG799832
4-Methyl-2-pentanone (MIBK)	ND		0.0100	1	07/02/2015 10:38	WG799832
Methyl tert-butyl ether	ND		0.00100	1	07/02/2015 10:38	WG799832
Naphthalene	0.0112		0.00500	1	07/02/2015 10:38	WG799832
n-Propylbenzene	0.00124		0.00100	1	07/02/2015 10:38	WG799832
Styrene	ND		0.00100	1	07/02/2015 10:38	WG799832
1,1,1,2-Tetrachloroethane	ND		0.00100	1	07/02/2015 10:38	WG799832
1,1,2,2-Tetrachloroethane	ND		0.00100	1	07/02/2015 10:38	WG799832
1,1,2-Trichlorotrifluoroethane	ND		0.00100	1	07/02/2015 10:38	WG799832
Tetrachloroethene	ND		0.00100	1	07/02/2015 10:38	WG799832
Toluene	ND		0.00500	1	07/02/2015 10:38	WG799832
1,2,3-Trichlorobenzene	ND		0.00100	1	07/02/2015 10:38	WG799832
1,2,4-Trichlorobenzene	ND		0.00100	1	07/02/2015 10:38	WG799832
1,1,1-Trichloroethane	ND		0.00100	1	07/02/2015 10:38	WG799832
1,1,2-Trichloroethane	ND		0.00100	1	07/02/2015 10:38	WG799832
Trichloroethene	ND		0.00100	1	07/02/2015 10:38	WG799832
Trichlorofluoromethane	ND		0.00500	1	07/02/2015 10:38	WG799832
1,2,3-Trichloropropane	ND		0.00250	1	07/02/2015 10:38	WG799832
1,2,4-Trimethylbenzene	0.00471		0.00100	1	07/02/2015 10:38	WG799832
1,2,3-Trimethylbenzene	0.00276		0.00100	1	07/02/2015 10:38	WG799832
1,3,5-Trimethylbenzene	ND		0.00100	1	07/02/2015 10:38	WG799832
Vinyl chloride	ND		0.00100	1	07/02/2015 10:38	WG799832
Xylenes, Total	0.00632		0.00300	1	07/02/2015 10:38	WG799832
(S) Toluene-d8	*104*		*90.0-115*		*07/02/2015 10:38*	WG799832
(S) Dibromofluoromethane	*94.4*		*79.0-121*		*07/02/2015 10:38*	WG799832
(S) 4-Bromofluorobenzene	*92.3*		*80.1-120*		*07/02/2015 10:38*	WG799832

Semi Volatile Organic Compounds (GC/MS) by Method 8270C

Analyte	Result mg/l	Qualifier	RDL mg/l	Dilution	Analysis date / time	Batch
Acenaphthene	ND		0.00100	1	07/01/2015 19:05	WG799995
Acenaphthylene	ND		0.00100	1	07/01/2015 19:05	WG799995
Anthracene	ND		0.00100	1	07/01/2015 19:05	WG799995
Benzo(a)anthracene	ND		0.00100	1	07/01/2015 19:05	WG799995
Benzo(b)fluoranthene	ND		0.00100	1	07/01/2015 19:05	WG799995
Benzo(k)fluoranthene	ND		0.00100	1	07/01/2015 19:05	WG799995
Benzo(g,h,i)perylene	ND		0.00100	1	07/01/2015 19:05	WG799995
Benzo(a)pyrene	ND		0.00100	1	07/01/2015 19:05	WG799995
Benzyl alcohol	ND		0.0100	1	07/01/2015 19:05	WG799995
Bis(2-chlorethoxy)methane	ND		0.0100	1	07/01/2015 19:05	WG799995
Bis(2-chloroethyl)ether	ND		0.0100	1	07/01/2015 19:05	WG799995
Bis(2-chloroisopropyl)ether	ND		0.0100	1	07/01/2015 19:05	WG799995
4-Bromophenyl-phenylether	ND		0.0100	1	07/01/2015 19:05	WG799995
4-Chloroaniline	ND		0.0100	1	07/01/2015 19:05	WG799995
2-Chloronaphthalene	ND		0.00100	1	07/01/2015 19:05	WG799995
4-Chlorophenyl-phenylether	ND		0.0100	1	07/01/2015 19:05	WG799995
Chrysene	ND		0.00100	1	07/01/2015 19:05	WG799995
Dibenz(a,h)anthracene	ND		0.00100	1	07/01/2015 19:05	WG799995
Dibenzofuran	ND		0.0100	1	07/01/2015 19:05	WG799995
3,3-Dichlorobenzidine	ND		0.0100	1	07/01/2015 19:05	WG799995

Semi Volatile Organic Compounds (GC/MS) by Method 8270C

Analyte	Result mg/l	Qualifier	RDL mg/l	Dilution	Analysis date / time	Batch
2,4-Dinitrotoluene	ND		0.0100	1	07/01/2015 19:05	WG799995
2,6-Dinitrotoluene	ND		0.0100	1	07/01/2015 19:05	WG799995
Fluoranthene	ND		0.00100	1	07/01/2015 19:05	WG799995
Fluorene	ND		0.00100	1	07/01/2015 19:05	WG799995
Hexachlorobenzene	ND		0.00100	1	07/01/2015 19:05	WG799995
Hexachloro-1,3-butadiene	ND		0.0100	1	07/01/2015 19:05	WG799995
Hexachlorocyclopentadiene	ND		0.0100	1	07/01/2015 19:05	WG799995
Hexachloroethane	ND		0.0100	1	07/01/2015 19:05	WG799995
Indeno(1,2,3-cd)pyrene	ND		0.00100	1	07/01/2015 19:05	WG799995
Isophorone	ND		0.0100	1	07/01/2015 19:05	WG799995
2-Methylnaphthalene	ND		0.00100	1	07/01/2015 19:05	WG799995
Naphthalene	0.0113		0.00100	1	07/01/2015 19:05	WG799995
2-Nitroaniline	ND		0.0100	1	07/01/2015 19:05	WG799995
3-Nitroaniline	ND		0.0100	1	07/01/2015 19:05	WG799995
4-Nitroaniline	ND		0.0100	1	07/01/2015 19:05	WG799995
Nitrobenzene	ND		0.0100	1	07/01/2015 19:05	WG799995
n-Nitrosodiphenylamine	ND		0.0100	1	07/01/2015 19:05	WG799995
n-Nitrosodi-n-propylamine	ND		0.0100	1	07/01/2015 19:05	WG799995
Phenanthrene	ND		0.00100	1	07/01/2015 19:05	WG799995
Benzylbutyl phthalate	ND		0.00300	1	07/01/2015 19:05	WG799995
Bis(2-ethylhexyl)phthalate	ND		0.00300	1	07/01/2015 19:05	WG799995
Di-n-butyl phthalate	ND		0.00300	1	07/01/2015 19:05	WG799995
Diethyl phthalate	ND		0.00300	1	07/01/2015 19:05	WG799995
Dimethyl phthalate	ND		0.00300	1	07/01/2015 19:05	WG799995
Di-n-octyl phthalate	ND		0.00300	1	07/01/2015 19:05	WG799995
Pyrene	ND		0.00100	1	07/01/2015 19:05	WG799995
1,2,4-Trichlorobenzene	ND		0.0100	1	07/01/2015 19:05	WG799995
4-Chloro-3-methylphenol	ND		0.0100	1	07/01/2015 19:05	WG799995
2-Chlorophenol	ND		0.0100	1	07/01/2015 19:05	WG799995
2-Methylphenol	ND		0.0100	1	07/01/2015 19:05	WG799995
3&4-Methyl Phenol	ND		0.0100	1	07/01/2015 19:05	WG799995
2,4-Dichlorophenol	ND		0.0100	1	07/01/2015 19:05	WG799995
2,4-Dimethylphenol	ND		0.0100	1	07/01/2015 19:05	WG799995
4,6-Dinitro-2-methylphenol	ND		0.0100	1	07/01/2015 19:05	WG799995
2,4-Dinitrophenol	ND		0.0100	1	07/01/2015 19:05	WG799995
2-Nitrophenol	ND		0.0100	1	07/01/2015 19:05	WG799995
4-Nitrophenol	ND		0.0100	1	07/01/2015 19:05	WG799995
Pentachlorophenol	ND		0.00100	1	07/01/2015 19:05	WG799995
Phenol	ND		0.0100	1	07/01/2015 19:05	WG799995
2,4,5-Trichlorophenol	ND		0.0100	1	07/01/2015 19:05	WG799995
2,4,6-Trichlorophenol	ND		0.0100	1	07/01/2015 19:05	WG799995
Acetophenone	ND		0.0100	1	07/01/2015 19:05	WG799995
2-Acetylaminofluorene	ND		0.0100	1	07/02/2015 13:07	WG799995
4-Aminobiphenyl	ND		0.0100	1	07/02/2015 13:07	WG799995
Chlorobenzilate	ND		0.0500	1	07/02/2015 13:07	WG799995
Diallate	ND		0.0100	1	07/02/2015 13:07	WG799995
Dinoseb	ND		0.0500	1	07/02/2015 13:07	WG799995
Ethyl methanesulfonate	ND		0.0100	1	07/02/2015 13:07	WG799995
Famphur	ND		0.0200	1	07/02/2015 13:07	WG799995
Hexachloropropene	ND		0.0500	1	07/02/2015 13:07	WG799995
Isodrin	ND		0.0100	1	07/02/2015 13:07	WG799995
Isosafrole	ND		0.0100	1	07/02/2015 13:07	WG799995
Kepone	ND		0.0200	1	07/02/2015 13:07	WG799995
Methapyrilene	ND		0.0500	1	07/02/2015 13:07	WG799995
3-Methylcholanthrene	ND		0.0100	1	07/02/2015 13:07	WG799995
Methyl methanesulfonate	ND		0.0500	1	07/02/2015 13:07	WG799995

Semi Volatile Organic Compounds (GC/MS) by Method 8270C

Analyte	Result mg/l	Qualifier	RDL mg/l	Dilution	Analysis date / time	Batch
Methyl parathion	ND		0.0100	1	07/02/2015 13:07	WG799995
1,4-Naphthoquinone	ND		0.0500	1	07/02/2015 13:07	WG799995
1-Naphthylamine	ND		0.0100	1	07/02/2015 13:07	WG799995
2-Naphthylamine	ND		0.0100	1	07/02/2015 13:07	WG799995
n-Nitrosodi-n-butylamine	ND		0.0100	1	07/02/2015 13:07	WG799995
n-Nitrosodiethylamine	ND		0.0100	1	07/02/2015 13:07	WG799995
n-Nitrosodimethylamine	ND		0.0100	1	07/01/2015 19:05	WG799995
n-Nitrosomethylethylamine	ND		0.0100	1	07/02/2015 13:07	WG799995
N-Nitrosomorpholine	ND		0.0100	1	07/02/2015 13:07	WG799995
n-Nitrosopiperidine	ND		0.0100	1	07/02/2015 13:07	WG799995
n-Nitrosopyrrolidine	ND		0.0100	1	07/02/2015 13:07	WG799995
5-Nitro-o-toluidine	ND		0.0100	1	07/02/2015 13:07	WG799995
Ethyl Parathion	ND		0.0100	1	07/02/2015 13:07	WG799995
Pentachlorobenzene	ND		0.0100	1	07/02/2015 13:07	WG799995
Pentachloronitrobenzene	ND		0.0100	1	07/02/2015 13:07	WG799995
Phenacetin	ND		0.0100	1	07/02/2015 13:07	WG799995
p-Phenylenediamine	ND		6.90	1	07/02/2015 13:07	WG799995
Phorate	ND		0.0500	1	07/02/2015 13:07	WG799995
Pronamide	ND		0.0100	1	07/02/2015 13:07	WG799995
Dimethoate	ND		0.0500	1	07/02/2015 13:07	WG799995
P-(Dimethylamino) Azobenzene	ND		0.0100	1	07/02/2015 13:07	WG799995
Dimethylbenz (A) Anthracene	ND		0.0100	1	07/02/2015 13:07	WG799995
3,3-Dimethylbenzidine	ND		0.0100	1	07/02/2015 13:07	WG799995
1,3-Dinitrobenzene	ND		0.0100	1	07/02/2015 13:07	WG799995
Diphenylamine	ND		0.0100	1	07/02/2015 13:07	WG799995
Disulfoton	ND		0.0100	1	07/02/2015 13:07	WG799995
Safrole	ND		0.0100	1	07/02/2015 13:07	WG799995
Thionazin	ND		0.0100	1	07/02/2015 13:07	WG799995
o-Toluidine	ND		0.0100	1	07/02/2015 13:07	WG799995
O,O,O-Triethyl phosphorothioate	ND		0.0100	1	07/02/2015 13:07	WG799995
1,3,5-Trinitrobenzene	ND		0.0100	1	07/02/2015 13:07	WG799995
1,2,4,5-Tetrachlorobenzene	ND		0.0100	1	07/01/2015 19:05	WG799995
2,6-Dichlorophenol	ND		0.0100	1	07/02/2015 13:07	WG799995
2,3,4,6-Tetrachlorophenol	ND		0.0100	1	07/01/2015 19:05	WG799995
(S) 2-Fluorophenol	*54.5*		*10.0-77.9*		*07/01/2015 19:05*	WG799995
(S) Phenol-d5	*36.7*		*5.00-70.1*		*07/01/2015 19:05*	WG799995
(S) Nitrobenzene-d5	*70.6*		*21.8-123*		*07/01/2015 19:05*	WG799995
(S) 2-Fluorobiphenyl	*77.9*		*29.5-131*		*07/01/2015 19:05*	WG799995
(S) 2,4,6-Tribromophenol	*77.5*		*11.2-130*		*07/01/2015 19:05*	WG799995
(S) p-Terphenyl-d14	*77.8*		*29.3-137*		*07/01/2015 19:05*	WG799995

Mercury by Method 7470A

Analyte	Result mg/l	Qualifier	RDL mg/l	Dilution	Analysis date / time	Batch
Mercury,Dissolved	ND		0.000200	1	07/02/2015 11:39	WG799696

Metals (ICP) by Method 6010B

Analyte	Result mg/l	Qualifier	RDL mg/l	Dilution	Analysis date / time	Batch
Arsenic,Dissolved	ND		0.0100	1	07/02/2015 00:31	WG799673
Barium,Dissolved	0.0215		0.00500	1	07/02/2015 00:31	WG799673
Cadmium,Dissolved	ND		0.00200	1	07/02/2015 00:31	WG799673
Chromium,Dissolved	ND		0.0100	1	07/02/2015 00:31	WG799673
Lead,Dissolved	ND		0.00500	1	07/02/2015 00:31	WG799673
Selenium,Dissolved	ND		0.0100	1	07/02/2015 00:31	WG799673
Silver,Dissolved	ND		0.00500	1	07/02/2015 00:31	WG799673

Volatile Organic Compounds (GC/MS) by Method 8260B

Analyte	Result mg/l	Qualifier	RDL mg/l	Dilution	Analysis date / time	Batch
Acetone	ND		0.0500	1	07/02/2015 10:59	WG799832
Acrolein	ND		0.0500	1	07/02/2015 10:59	WG799832
Acrylonitrile	ND		0.0100	1	07/02/2015 10:59	WG799832
Benzene	0.0236		0.00100	1	07/02/2015 10:59	WG799832
Bromobenzene	ND		0.00100	1	07/02/2015 10:59	WG799832
Bromodichloromethane	ND		0.00100	1	07/02/2015 10:59	WG799832
Bromoform	ND	J4	0.00100	1	07/02/2015 10:59	WG799832
Bromomethane	ND		0.00500	1	07/02/2015 10:59	WG799832
n-Butylbenzene	0.00200		0.00100	1	07/02/2015 10:59	WG799832
sec-Butylbenzene	ND		0.00100	1	07/02/2015 10:59	WG799832
tert-Butylbenzene	ND		0.00100	1	07/02/2015 10:59	WG799832
Carbon tetrachloride	ND		0.00100	1	07/02/2015 10:59	WG799832
Chlorobenzene	ND		0.00100	1	07/02/2015 10:59	WG799832
Chlorodibromomethane	ND		0.00100	1	07/02/2015 10:59	WG799832
Chloroethane	ND		0.00500	1	07/02/2015 10:59	WG799832
2-Chloroethyl vinyl ether	ND		0.0500	1	07/02/2015 10:59	WG799832
Chloroform	ND		0.00500	1	07/02/2015 10:59	WG799832
Chloromethane	ND		0.00250	1	07/02/2015 10:59	WG799832
2-Chlorotoluene	ND		0.00100	1	07/02/2015 10:59	WG799832
4-Chlorotoluene	ND		0.00100	1	07/02/2015 10:59	WG799832
1,2-Dibromo-3-Chloropropane	ND		0.00500	1	07/02/2015 10:59	WG799832
1,2-Dibromoethane	ND		0.00100	1	07/02/2015 10:59	WG799832
Dibromomethane	ND		0.00100	1	07/02/2015 10:59	WG799832
1,2-Dichlorobenzene	ND		0.00100	1	07/02/2015 10:59	WG799832
1,3-Dichlorobenzene	ND		0.00100	1	07/02/2015 10:59	WG799832
1,4-Dichlorobenzene	ND		0.00100	1	07/02/2015 10:59	WG799832
Dichlorodifluoromethane	ND		0.00500	1	07/02/2015 10:59	WG799832
1,1-Dichloroethane	ND		0.00100	1	07/02/2015 10:59	WG799832
1,2-Dichloroethane	ND		0.00100	1	07/02/2015 10:59	WG799832
1,1-Dichloroethene	ND		0.00100	1	07/02/2015 10:59	WG799832
cis-1,2-Dichloroethene	ND		0.00100	1	07/02/2015 10:59	WG799832
trans-1,2-Dichloroethene	ND		0.00100	1	07/02/2015 10:59	WG799832
1,2-Dichloropropane	ND		0.00100	1	07/02/2015 10:59	WG799832
1,1-Dichloropropene	ND		0.00100	1	07/02/2015 10:59	WG799832
1,3-Dichloropropane	ND		0.00100	1	07/02/2015 10:59	WG799832
cis-1,3-Dichloropropene	ND		0.00100	1	07/02/2015 10:59	WG799832
trans-1,3-Dichloropropene	ND		0.00100	1	07/02/2015 10:59	WG799832
2,2-Dichloropropane	ND		0.00100	1	07/02/2015 10:59	WG799832
Dicyclopentadiene	0.172		0.00100	1	07/02/2015 10:59	WG799832

Volatile Organic Compounds (GC/MS) by Method 8260B

Analyte	Result mg/l	Qualifier	RDL mg/l	Dilution	Analysis date / time	Batch
Di-isopropyl ether	ND		0.00100	1	07/02/2015 10:59	WG799832
Ethylbenzene	0.0164		0.00100	1	07/02/2015 10:59	WG799832
Hexachloro-1,3-butadiene	ND		0.00100	1	07/02/2015 10:59	WG799832
Isopropylbenzene	0.00413		0.00100	1	07/02/2015 10:59	WG799832
p-Isopropyltoluene	ND		0.00100	1	07/02/2015 10:59	WG799832
2-Butanone (MEK)	ND		0.0100	1	07/02/2015 10:59	WG799832
Methylene Chloride	ND		0.00500	1	07/02/2015 10:59	WG799832
4-Methyl-2-pentanone (MIBK)	ND		0.0100	1	07/02/2015 10:59	WG799832
Methyl tert-butyl ether	ND		0.00100	1	07/02/2015 10:59	WG799832
Naphthalene	0.264		0.0250	5	07/02/2015 15:12	WG798776
n-Propylbenzene	0.0115		0.00100	1	07/02/2015 10:59	WG799832
Styrene	ND		0.00100	1	07/02/2015 10:59	WG799832
1,1,1,2-Tetrachloroethane	ND		0.00100	1	07/02/2015 10:59	WG799832
1,1,2,2-Tetrachloroethane	ND		0.00100	1	07/02/2015 10:59	WG799832
1,1,2-Trichlorotrifluoroethane	ND		0.00100	1	07/02/2015 10:59	WG799832
Tetrachloroethene	ND		0.00100	1	07/02/2015 10:59	WG799832
Toluene	ND		0.00500	1	07/02/2015 10:59	WG799832
1,2,3-Trichlorobenzene	ND		0.00100	1	07/02/2015 10:59	WG799832
1,2,4-Trichlorobenzene	ND		0.00100	1	07/02/2015 10:59	WG799832
1,1,1-Trichloroethane	ND		0.00100	1	07/02/2015 10:59	WG799832
1,1,2-Trichloroethane	ND		0.00100	1	07/02/2015 10:59	WG799832
Trichloroethene	ND		0.00100	1	07/02/2015 10:59	WG799832
Trichlorofluoromethane	ND		0.00500	1	07/02/2015 10:59	WG799832
1,2,3-Trichloropropane	ND		0.00250	1	07/02/2015 10:59	WG799832
1,2,4-Trimethylbenzene	0.0213		0.00100	1	07/02/2015 10:59	WG799832
1,2,3-Trimethylbenzene	0.0137		0.00100	1	07/02/2015 10:59	WG799832
1,3,5-Trimethylbenzene	0.00124		0.00100	1	07/02/2015 10:59	WG799832
Vinyl chloride	ND		0.00100	1	07/02/2015 10:59	WG799832
Xylenes, Total	0.0248		0.00300	1	07/02/2015 10:59	WG799832
(S) Toluene-d8	*104*		*90.0-115*		*07/02/2015 10:59*	WG799832
(S) Dibromofluoromethane	*94.5*		*79.0-121*		*07/02/2015 10:59*	WG799832
(S) 4-Bromofluorobenzene	*95.3*		*80.1-120*		*07/02/2015 10:59*	WG799832

Semi Volatile Organic Compounds (GC/MS) by Method 8270C

Analyte	Result mg/l	Qualifier	RDL mg/l	Dilution	Analysis date / time	Batch
Acenaphthene	ND		0.00100	1	07/01/2015 19:28	WG799995
Acenaphthylene	ND		0.00100	1	07/01/2015 19:28	WG799995
Anthracene	ND		0.00100	1	07/01/2015 19:28	WG799995
Benzo(a)anthracene	ND		0.00100	1	07/01/2015 19:28	WG799995
Benzo(b)fluoranthene	ND		0.00100	1	07/01/2015 19:28	WG799995
Benzo(k)fluoranthene	ND		0.00100	1	07/01/2015 19:28	WG799995
Benzo(g,h,i)perylene	ND		0.00100	1	07/01/2015 19:28	WG799995
Benzo(a)pyrene	ND		0.00100	1	07/01/2015 19:28	WG799995
Benzyl alcohol	ND		0.0100	1	07/01/2015 19:28	WG799995
Bis(2-chlorethoxy)methane	ND		0.0100	1	07/01/2015 19:28	WG799995
Bis(2-chloroethyl)ether	ND		0.0100	1	07/01/2015 19:28	WG799995
Bis(2-chloroisopropyl)ether	0.0162		0.0100	1	07/01/2015 19:28	WG799995
4-Bromophenyl-phenylether	ND		0.0100	1	07/01/2015 19:28	WG799995
4-Chloroaniline	ND		0.0100	1	07/01/2015 19:28	WG799995
2-Chloronaphthalene	ND		0.00100	1	07/01/2015 19:28	WG799995
4-Chlorophenyl-phenylether	ND		0.0100	1	07/01/2015 19:28	WG799995
Chrysene	ND		0.00100	1	07/01/2015 19:28	WG799995
Dibenz(a,h)anthracene	ND		0.00100	1	07/01/2015 19:28	WG799995
Dibenzofuran	ND		0.0100	1	07/01/2015 19:28	WG799995
3,3-Dichlorobenzidine	ND		0.0100	1	07/01/2015 19:28	WG799995

Semi Volatile Organic Compounds (GC/MS) by Method 8270C

Analyte	Result mg/l	Qualifier	RDL mg/l	Dilution	Analysis date / time	Batch
2,4-Dinitrotoluene	ND		0.0100	1	07/01/2015 19:28	WG799995
2,6-Dinitrotoluene	ND		0.0100	1	07/01/2015 19:28	WG799995
Fluoranthene	ND		0.00100	1	07/01/2015 19:28	WG799995
Fluorene	ND		0.00100	1	07/01/2015 19:28	WG799995
Hexachlorobenzene	ND		0.00100	1	07/01/2015 19:28	WG799995
Hexachloro-1,3-butadiene	ND		0.0100	1	07/01/2015 19:28	WG799995
Hexachlorocyclopentadiene	ND		0.0100	1	07/01/2015 19:28	WG799995
Hexachloroethane	ND		0.0100	1	07/01/2015 19:28	WG799995
Indeno(1,2,3-cd)pyrene	ND		0.00100	1	07/01/2015 19:28	WG799995
Isophorone	ND		0.0100	1	07/01/2015 19:28	WG799995
2-Methylnaphthalene	0.00276		0.00100	1	07/01/2015 19:28	WG799995
Naphthalene	0.145		0.00100	1	07/01/2015 19:28	WG799995
2-Nitroaniline	ND		0.0100	1	07/01/2015 19:28	WG799995
3-Nitroaniline	ND		0.0100	1	07/01/2015 19:28	WG799995
4-Nitroaniline	ND		0.0100	1	07/01/2015 19:28	WG799995
Nitrobenzene	ND		0.0100	1	07/01/2015 19:28	WG799995
n-Nitrosodiphenylamine	ND		0.0100	1	07/01/2015 19:28	WG799995
n-Nitrosodi-n-propylamine	ND		0.0100	1	07/01/2015 19:28	WG799995
Phenanthrene	ND		0.00100	1	07/01/2015 19:28	WG799995
Benzylbutyl phthalate	ND		0.00300	1	07/01/2015 19:28	WG799995
Bis(2-ethylhexyl)phthalate	ND		0.00300	1	07/01/2015 19:28	WG799995
Di-n-butyl phthalate	ND		0.00300	1	07/01/2015 19:28	WG799995
Diethyl phthalate	ND		0.00300	1	07/01/2015 19:28	WG799995
Dimethyl phthalate	ND		0.00300	1	07/01/2015 19:28	WG799995
Di-n-octyl phthalate	ND		0.00300	1	07/01/2015 19:28	WG799995
Pyrene	ND		0.00100	1	07/01/2015 19:28	WG799995
1,2,4-Trichlorobenzene	ND		0.0100	1	07/01/2015 19:28	WG799995
4-Chloro-3-methylphenol	ND		0.0100	1	07/01/2015 19:28	WG799995
2-Chlorophenol	ND		0.0100	1	07/01/2015 19:28	WG799995
2-Methylphenol	ND		0.0100	1	07/01/2015 19:28	WG799995
3&4-Methyl Phenol	ND		0.0100	1	07/01/2015 19:28	WG799995
2,4-Dichlorophenol	ND		0.0100	1	07/01/2015 19:28	WG799995
2,4-Dimethylphenol	ND		0.0100	1	07/01/2015 19:28	WG799995
4,6-Dinitro-2-methylphenol	ND		0.0100	1	07/01/2015 19:28	WG799995
2,4-Dinitrophenol	ND		0.0100	1	07/01/2015 19:28	WG799995
2-Nitrophenol	ND		0.0100	1	07/01/2015 19:28	WG799995
4-Nitrophenol	ND		0.0100	1	07/01/2015 19:28	WG799995
Pentachlorophenol	ND		0.00100	1	07/01/2015 19:28	WG799995
Phenol	ND		0.0100	1	07/01/2015 19:28	WG799995
2,4,5-Trichlorophenol	ND		0.0100	1	07/01/2015 19:28	WG799995
2,4,6-Trichlorophenol	ND		0.0100	1	07/01/2015 19:28	WG799995
Acetophenone	ND		0.0100	1	07/01/2015 19:28	WG799995
2-Acetylaminofluorene	ND		0.0100	1	07/02/2015 13:24	WG799995
4-Aminobiphenyl	ND		0.0100	1	07/02/2015 13:24	WG799995
Chlorobenzilate	ND		0.0500	1	07/02/2015 13:24	WG799995
Diallate	ND		0.0100	1	07/02/2015 13:24	WG799995
Dinoseb	ND		0.0500	1	07/02/2015 13:24	WG799995
Ethyl methanesulfonate	ND		0.0100	1	07/02/2015 13:24	WG799995
Famphur	ND		0.0200	1	07/02/2015 13:24	WG799995
Hexachloropropene	ND		0.0500	1	07/02/2015 13:24	WG799995
Isodrin	ND		0.0100	1	07/02/2015 13:24	WG799995
Isosafrole	0.0239		0.0100	1	07/02/2015 13:24	WG799995
Kepone	ND		0.0200	1	07/02/2015 13:24	WG799995
Methapyrilene	ND		0.0500	1	07/02/2015 13:24	WG799995
3-Methylcholanthrene	ND		0.0100	1	07/02/2015 13:24	WG799995
Methyl methanesulfonate	ND		0.0500	1	07/02/2015 13:24	WG799995

Semi Volatile Organic Compounds (GC/MS) by Method 8270C

Analyte	Result mg/l	Qualifier	RDL mg/l	Dilution	Analysis date / time	Batch
Methyl parathion	ND		0.0100	1	07/02/2015 13:24	WG799995
1,4-Naphthoquinone	ND		0.0500	1	07/02/2015 13:24	WG799995
1-Naphthylamine	ND		0.0100	1	07/02/2015 13:24	WG799995
2-Naphthylamine	ND		0.0100	1	07/02/2015 13:24	WG799995
n-Nitrosodi-n-butylamine	ND		0.0100	1	07/02/2015 13:24	WG799995
n-Nitrosodiethylamine	ND		0.0100	1	07/02/2015 13:24	WG799995
n-Nitrosodimethylamine	ND		0.0100	1	07/01/2015 19:28	WG799995
n-Nitrosomethylethylamine	ND		0.0100	1	07/02/2015 13:24	WG799995
N-Nitrosomorpholine	ND		0.0100	1	07/02/2015 13:24	WG799995
n-Nitrosopiperidine	ND		0.0100	1	07/02/2015 13:24	WG799995
n-Nitrosopyrrolidine	ND		0.0100	1	07/02/2015 13:24	WG799995
5-Nitro-o-toluidine	ND		0.0100	1	07/02/2015 13:24	WG799995
Ethyl Parathion	ND		0.0100	1	07/02/2015 13:24	WG799995
Pentachlorobenzene	ND		0.0100	1	07/02/2015 13:24	WG799995
Pentachloronitrobenzene	ND		0.0100	1	07/02/2015 13:24	WG799995
Phenacetin	ND		0.0100	1	07/02/2015 13:24	WG799995
p-Phenylenediamine	ND		6.90	1	07/02/2015 13:24	WG799995
Phorate	ND		0.0500	1	07/02/2015 13:24	WG799995
Pronamide	ND		0.0100	1	07/02/2015 13:24	WG799995
Dimethoate	ND		0.0500	1	07/02/2015 13:24	WG799995
P-(Dimethylamino) Azobenzene	ND		0.0100	1	07/02/2015 13:24	WG799995
Dimethylbenz (A) Anthracene	ND		0.0100	1	07/02/2015 13:24	WG799995
3,3-Dimethylbenzidine	ND		0.0100	1	07/02/2015 13:24	WG799995
1,3-Dinitrobenzene	ND		0.0100	1	07/02/2015 13:24	WG799995
Diphenylamine	ND		0.0100	1	07/02/2015 13:24	WG799995
Disulfoton	ND		0.0100	1	07/02/2015 13:24	WG799995
Safrole	ND		0.0100	1	07/02/2015 13:24	WG799995
Thionazin	ND		0.0100	1	07/02/2015 13:24	WG799995
o-Toluidine	ND		0.0100	1	07/02/2015 13:24	WG799995
O,O,O-Triethyl phosphorothioate	ND		0.0100	1	07/02/2015 13:24	WG799995
1,3,5-Trinitrobenzene	ND		0.0100	1	07/02/2015 13:24	WG799995
1,2,4,5-Tetrachlorobenzene	ND		0.0100	1	07/01/2015 19:28	WG799995
2,6-Dichlorophenol	ND		0.0100	1	07/02/2015 13:24	WG799995
2,3,4,6-Tetrachlorophenol	ND		0.0100	1	07/01/2015 19:28	WG799995
(S) 2-Fluorophenol	*51.9*		*10.0-77.9*		*07/01/2015 19:28*	WG799995
(S) Phenol-d5	*37.6*		*5.00-70.1*		*07/01/2015 19:28*	WG799995
(S) Nitrobenzene-d5	*62.7*		*21.8-123*		*07/01/2015 19:28*	WG799995
(S) 2-Fluorobiphenyl	*67.3*		*29.5-131*		*07/01/2015 19:28*	WG799995
(S) 2,4,6-Tribromophenol	*87.6*		*11.2-130*		*07/01/2015 19:28*	WG799995
(S) p-Terphenyl-d14	*79.2*		*29.3-137*		*07/01/2015 19:28*	WG799995

Mercury by Method 7470A

Analyte	Result mg/l	Qualifier	RDL mg/l	Dilution	Analysis date / time	Batch
Mercury,Dissolved	ND		0.000200	1	07/02/2015 11:42	WG799696

Metals (ICP) by Method 6010B

Analyte	Result mg/l	Qualifier	RDL mg/l	Dilution	Analysis date / time	Batch
Arsenic,Dissolved	ND		0.0100	1	07/02/2015 00:36	WG799673
Barium,Dissolved	0.0243		0.00500	1	07/02/2015 00:36	WG799673
Cadmium,Dissolved	ND		0.00200	1	07/02/2015 00:36	WG799673
Chromium,Dissolved	ND		0.0100	1	07/02/2015 00:36	WG799673
Lead,Dissolved	0.00604		0.00500	1	07/02/2015 00:36	WG799673
Selenium,Dissolved	ND		0.0100	1	07/02/2015 00:36	WG799673
Silver,Dissolved	ND		0.00500	1	07/02/2015 00:36	WG799673

Volatile Organic Compounds (GC/MS) by Method 8260B

Analyte	Result mg/l	Qualifier	RDL mg/l	Dilution	Analysis date / time	Batch
Acetone	ND		0.0500	1	07/02/2015 11:19	WG799832
Acrolein	ND		0.0500	1	07/02/2015 11:19	WG799832
Acrylonitrile	ND		0.0100	1	07/02/2015 11:19	WG799832
Benzene	ND		0.00100	1	07/02/2015 11:19	WG799832
Bromobenzene	ND		0.00100	1	07/02/2015 11:19	WG799832
Bromodichloromethane	ND		0.00100	1	07/02/2015 11:19	WG799832
Bromoform	ND	J4	0.00100	1	07/02/2015 11:19	WG799832
Bromomethane	ND		0.00500	1	07/02/2015 11:19	WG799832
n-Butylbenzene	ND		0.00100	1	07/02/2015 11:19	WG799832
sec-Butylbenzene	ND		0.00100	1	07/02/2015 11:19	WG799832
tert-Butylbenzene	ND		0.00100	1	07/02/2015 11:19	WG799832
Carbon tetrachloride	ND		0.00100	1	07/02/2015 11:19	WG799832
Chlorobenzene	ND		0.00100	1	07/02/2015 11:19	WG799832
Chlorodibromomethane	ND		0.00100	1	07/02/2015 11:19	WG799832
Chloroethane	ND		0.00500	1	07/02/2015 11:19	WG799832
2-Chloroethyl vinyl ether	ND		0.0500	1	07/02/2015 11:19	WG799832
Chloroform	ND		0.00500	1	07/02/2015 11:19	WG799832
Chloromethane	ND		0.00250	1	07/02/2015 11:19	WG799832
2-Chlorotoluene	ND		0.00100	1	07/02/2015 11:19	WG799832
4-Chlorotoluene	ND		0.00100	1	07/02/2015 11:19	WG799832
1,2-Dibromo-3-Chloropropane	ND		0.00500	1	07/02/2015 11:19	WG799832
1,2-Dibromoethane	ND		0.00100	1	07/02/2015 11:19	WG799832
Dibromomethane	ND		0.00100	1	07/02/2015 11:19	WG799832
1,2-Dichlorobenzene	ND		0.00100	1	07/02/2015 11:19	WG799832
1,3-Dichlorobenzene	ND		0.00100	1	07/02/2015 11:19	WG799832
1,4-Dichlorobenzene	ND		0.00100	1	07/02/2015 11:19	WG799832
Dichlorodifluoromethane	ND		0.00500	1	07/02/2015 11:19	WG799832
1,1-Dichloroethane	ND		0.00100	1	07/02/2015 11:19	WG799832
1,2-Dichloroethane	ND		0.00100	1	07/02/2015 11:19	WG799832
1,1-Dichloroethene	ND		0.00100	1	07/02/2015 11:19	WG799832
cis-1,2-Dichloroethene	ND		0.00100	1	07/02/2015 11:19	WG799832
trans-1,2-Dichloroethene	ND		0.00100	1	07/02/2015 11:19	WG799832
1,2-Dichloropropane	ND		0.00100	1	07/02/2015 11:19	WG799832
1,1-Dichloropropene	ND		0.00100	1	07/02/2015 11:19	WG799832
1,3-Dichloropropane	ND		0.00100	1	07/02/2015 11:19	WG799832
cis-1,3-Dichloropropene	ND		0.00100	1	07/02/2015 11:19	WG799832
trans-1,3-Dichloropropene	ND		0.00100	1	07/02/2015 11:19	WG799832
2,2-Dichloropropane	ND		0.00100	1	07/02/2015 11:19	WG799832
Dicyclopentadiene	ND		0.00100	1	07/02/2015 11:19	WG799832

Volatile Organic Compounds (GC/MS) by Method 8260B

Analyte	Result mg/l	Qualifier	RDL mg/l	Dilution	Analysis date / time	Batch
Di-isopropyl ether	ND		0.00100	1	07/02/2015 11:19	WG799832
Ethylbenzene	ND		0.00100	1	07/02/2015 11:19	WG799832
Hexachloro-1,3-butadiene	ND		0.00100	1	07/02/2015 11:19	WG799832
Isopropylbenzene	ND		0.00100	1	07/02/2015 11:19	WG799832
p-Isopropyltoluene	ND		0.00100	1	07/02/2015 11:19	WG799832
2-Butanone (MEK)	ND		0.0100	1	07/02/2015 11:19	WG799832
Methylene Chloride	ND		0.00500	1	07/02/2015 11:19	WG799832
4-Methyl-2-pentanone (MIBK)	ND		0.0100	1	07/02/2015 11:19	WG799832
Methyl tert-butyl ether	ND		0.00100	1	07/02/2015 11:19	WG799832
Naphthalene	ND		0.00500	1	07/02/2015 14:34	WG798776
n-Propylbenzene	ND		0.00100	1	07/02/2015 11:19	WG799832
Styrene	ND		0.00100	1	07/02/2015 11:19	WG799832
1,1,1,2-Tetrachloroethane	ND		0.00100	1	07/02/2015 11:19	WG799832
1,1,2,2-Tetrachloroethane	ND		0.00100	1	07/02/2015 11:19	WG799832
1,1,2-Trichlorotrifluoroethane	ND		0.00100	1	07/02/2015 11:19	WG799832
Tetrachloroethene	ND		0.00100	1	07/02/2015 11:19	WG799832
Toluene	ND		0.00500	1	07/02/2015 11:19	WG799832
1,2,3-Trichlorobenzene	ND		0.00100	1	07/02/2015 11:19	WG799832
1,2,4-Trichlorobenzene	ND		0.00100	1	07/02/2015 11:19	WG799832
1,1,1-Trichloroethane	ND		0.00100	1	07/02/2015 11:19	WG799832
1,1,2-Trichloroethane	ND		0.00100	1	07/02/2015 11:19	WG799832
Trichloroethene	ND		0.00100	1	07/02/2015 11:19	WG799832
Trichlorofluoromethane	ND		0.00500	1	07/02/2015 11:19	WG799832
1,2,3-Trichloropropane	ND		0.00250	1	07/02/2015 11:19	WG799832
1,2,4-Trimethylbenzene	ND		0.00100	1	07/02/2015 11:19	WG799832
1,2,3-Trimethylbenzene	ND		0.00100	1	07/02/2015 11:19	WG799832
1,3,5-Trimethylbenzene	ND		0.00100	1	07/02/2015 11:19	WG799832
Vinyl chloride	ND		0.00100	1	07/02/2015 11:19	WG799832
Xylenes, Total	ND		0.00300	1	07/02/2015 11:19	WG799832
(S) Toluene-d8	*103*		*90.0-115*		*07/02/2015 11:19*	WG799832
(S) Dibromofluoromethane	*94.0*		*79.0-121*		*07/02/2015 11:19*	WG799832
(S) 4-Bromofluorobenzene	*91.4*		*80.1-120*		*07/02/2015 11:19*	WG799832

Semi Volatile Organic Compounds (GC/MS) by Method 8270C

Analyte	Result mg/l	Qualifier	RDL mg/l	Dilution	Analysis date / time	Batch
Acenaphthene	ND		0.00100	1	07/01/2015 19:51	WG799995
Acenaphthylene	ND		0.00100	1	07/01/2015 19:51	WG799995
Anthracene	ND		0.00100	1	07/01/2015 19:51	WG799995
Benzo(a)anthracene	ND		0.00100	1	07/01/2015 19:51	WG799995
Benzo(b)fluoranthene	ND		0.00100	1	07/01/2015 19:51	WG799995
Benzo(k)fluoranthene	ND		0.00100	1	07/01/2015 19:51	WG799995
Benzo(g,h,i)perylene	ND		0.00100	1	07/01/2015 19:51	WG799995
Benzo(a)pyrene	ND		0.00100	1	07/01/2015 19:51	WG799995
Benzyl alcohol	ND		0.0100	1	07/01/2015 19:51	WG799995
Bis(2-chlorethoxy)methane	ND		0.0100	1	07/01/2015 19:51	WG799995
Bis(2-chloroethyl)ether	ND		0.0100	1	07/01/2015 19:51	WG799995
Bis(2-chloroisopropyl)ether	ND		0.0100	1	07/01/2015 19:51	WG799995
4-Bromophenyl-phenylether	ND		0.0100	1	07/01/2015 19:51	WG799995
4-Chloroaniline	ND		0.0100	1	07/01/2015 19:51	WG799995
2-Chloronaphthalene	ND		0.00100	1	07/01/2015 19:51	WG799995
4-Chlorophenyl-phenylether	ND		0.0100	1	07/01/2015 19:51	WG799995
Chrysene	ND		0.00100	1	07/01/2015 19:51	WG799995
Dibenz(a,h)anthracene	ND		0.00100	1	07/01/2015 19:51	WG799995
Dibenzofuran	ND		0.0100	1	07/01/2015 19:51	WG799995
3,3-Dichlorobenzidine	ND		0.0100	1	07/01/2015 19:51	WG799995

Semi Volatile Organic Compounds (GC/MS) by Method 8270C

Analyte	Result mg/l	Qualifier	RDL mg/l	Dilution	Analysis date / time	Batch
2,4-Dinitrotoluene	ND		0.0100	1	07/01/2015 19:51	WG799995
2,6-Dinitrotoluene	ND		0.0100	1	07/01/2015 19:51	WG799995
Fluoranthene	ND		0.00100	1	07/01/2015 19:51	WG799995
Fluorene	ND		0.00100	1	07/01/2015 19:51	WG799995
Hexachlorobenzene	ND		0.00100	1	07/01/2015 19:51	WG799995
Hexachloro-1,3-butadiene	ND		0.0100	1	07/01/2015 19:51	WG799995
Hexachlorocyclopentadiene	ND		0.0100	1	07/01/2015 19:51	WG799995
Hexachloroethane	ND		0.0100	1	07/01/2015 19:51	WG799995
Indeno(1,2,3-cd)pyrene	ND		0.00100	1	07/01/2015 19:51	WG799995
Isophorone	ND		0.0100	1	07/01/2015 19:51	WG799995
2-Methylnaphthalene	ND		0.00100	1	07/01/2015 19:51	WG799995
Naphthalene	ND		0.00100	1	07/01/2015 19:51	WG799995
2-Nitroaniline	ND		0.0100	1	07/01/2015 19:51	WG799995
3-Nitroaniline	ND		0.0100	1	07/01/2015 19:51	WG799995
4-Nitroaniline	ND		0.0100	1	07/01/2015 19:51	WG799995
Nitrobenzene	ND		0.0100	1	07/01/2015 19:51	WG799995
n-Nitrosodiphenylamine	ND		0.0100	1	07/01/2015 19:51	WG799995
n-Nitrosodi-n-propylamine	ND		0.0100	1	07/01/2015 19:51	WG799995
Phenanthrene	ND		0.00100	1	07/01/2015 19:51	WG799995
Benzylbutyl phthalate	ND		0.00300	1	07/01/2015 19:51	WG799995
Bis(2-ethylhexyl)phthalate	ND		0.00300	1	07/01/2015 19:51	WG799995
Di-n-butyl phthalate	ND		0.00300	1	07/01/2015 19:51	WG799995
Diethyl phthalate	ND		0.00300	1	07/01/2015 19:51	WG799995
Dimethyl phthalate	ND		0.00300	1	07/01/2015 19:51	WG799995
Di-n-octyl phthalate	ND		0.00300	1	07/01/2015 19:51	WG799995
Pyrene	ND		0.00100	1	07/01/2015 19:51	WG799995
1,2,4-Trichlorobenzene	ND		0.0100	1	07/01/2015 19:51	WG799995
4-Chloro-3-methylphenol	ND		0.0100	1	07/01/2015 19:51	WG799995
2-Chlorophenol	ND		0.0100	1	07/01/2015 19:51	WG799995
2-Methylphenol	ND		0.0100	1	07/01/2015 19:51	WG799995
3&4-Methyl Phenol	ND		0.0100	1	07/01/2015 19:51	WG799995
2,4-Dichlorophenol	ND		0.0100	1	07/01/2015 19:51	WG799995
2,4-Dimethylphenol	ND		0.0100	1	07/01/2015 19:51	WG799995
4,6-Dinitro-2-methylphenol	ND		0.0100	1	07/01/2015 19:51	WG799995
2,4-Dinitrophenol	ND		0.0100	1	07/01/2015 19:51	WG799995
2-Nitrophenol	ND		0.0100	1	07/01/2015 19:51	WG799995
4-Nitrophenol	ND		0.0100	1	07/01/2015 19:51	WG799995
Pentachlorophenol	ND		0.00100	1	07/01/2015 19:51	WG799995
Phenol	ND		0.0100	1	07/01/2015 19:51	WG799995
2,4,5-Trichlorophenol	ND		0.0100	1	07/01/2015 19:51	WG799995
2,4,6-Trichlorophenol	ND		0.0100	1	07/01/2015 19:51	WG799995
Acetophenone	ND		0.0100	1	07/01/2015 19:51	WG799995
2-Acetylaminofluorene	ND		0.0100	1	07/02/2015 13:42	WG799995
4-Aminobiphenyl	ND		0.0100	1	07/02/2015 13:42	WG799995
Chlorobenzilate	ND		0.0500	1	07/02/2015 13:42	WG799995
Diallate	ND		0.0100	1	07/02/2015 13:42	WG799995
Dinoseb	ND		0.0500	1	07/02/2015 13:42	WG799995
Ethyl methanesulfonate	ND		0.0100	1	07/02/2015 13:42	WG799995
Famphur	ND		0.0200	1	07/02/2015 13:42	WG799995
Hexachloropropene	ND		0.0500	1	07/02/2015 13:42	WG799995
Isodrin	ND		0.0100	1	07/02/2015 13:42	WG799995
Isosafrole	ND		0.0100	1	07/02/2015 13:42	WG799995
Kepone	ND		0.0200	1	07/02/2015 13:42	WG799995
Methapyrilene	ND		0.0500	1	07/02/2015 13:42	WG799995
3-Methylcholanthrene	ND		0.0100	1	07/02/2015 13:42	WG799995
Methyl methanesulfonate	ND		0.0500	1	07/02/2015 13:42	WG799995

Semi Volatile Organic Compounds (GC/MS) by Method 8270C

Analyte	Result mg/l	Qualifier	RDL mg/l	Dilution	Analysis date / time	Batch
Methyl parathion	ND		0.0100	1	07/02/2015 13:42	WG799995
1,4-Naphthoquinone	ND		0.0500	1	07/02/2015 13:42	WG799995
1-Naphthylamine	ND		0.0100	1	07/02/2015 13:42	WG799995
2-Naphthylamine	ND		0.0100	1	07/02/2015 13:42	WG799995
n-Nitrosodi-n-butylamine	ND		0.0100	1	07/02/2015 13:42	WG799995
n-Nitrosodiethylamine	ND		0.0100	1	07/02/2015 13:42	WG799995
n-Nitrosodimethylamine	ND		0.0100	1	07/01/2015 19:51	WG799995
n-Nitrosomethylethylamine	ND		0.0100	1	07/02/2015 13:42	WG799995
N-Nitrosomorpholine	ND		0.0100	1	07/02/2015 13:42	WG799995
n-Nitrosopiperidine	ND		0.0100	1	07/02/2015 13:42	WG799995
n-Nitrosopyrrolidine	ND		0.0100	1	07/02/2015 13:42	WG799995
5-Nitro-o-toluidine	ND		0.0100	1	07/02/2015 13:42	WG799995
Ethyl Parathion	ND		0.0100	1	07/02/2015 13:42	WG799995
Pentachlorobenzene	ND		0.0100	1	07/02/2015 13:42	WG799995
Pentachloronitrobenzene	ND		0.0100	1	07/02/2015 13:42	WG799995
Phenacetin	ND		0.0100	1	07/02/2015 13:42	WG799995
p-Phenylenediamine	ND		6.90	1	07/02/2015 13:42	WG799995
Phorate	ND		0.0500	1	07/02/2015 13:42	WG799995
Pronamide	ND		0.0100	1	07/02/2015 13:42	WG799995
Dimethoate	ND		0.0500	1	07/02/2015 13:42	WG799995
P-(Dimethylamino) Azobenzene	ND		0.0100	1	07/02/2015 13:42	WG799995
Dimethylbenz (A) Anthracene	ND		0.0100	1	07/02/2015 13:42	WG799995
3,3-Dimethylbenzidine	ND		0.0100	1	07/02/2015 13:42	WG799995
1,3-Dinitrobenzene	ND		0.0100	1	07/02/2015 13:42	WG799995
Diphenylamine	ND		0.0100	1	07/02/2015 13:42	WG799995
Disulfoton	ND		0.0100	1	07/02/2015 13:42	WG799995
Safrole	ND		0.0100	1	07/02/2015 13:42	WG799995
Thionazin	ND		0.0100	1	07/02/2015 13:42	WG799995
o-Toluidine	ND		0.0100	1	07/02/2015 13:42	WG799995
O,O,O-Triethyl phosphorothioate	ND		0.0100	1	07/02/2015 13:42	WG799995
1,3,5-Trinitrobenzene	ND		0.0100	1	07/02/2015 13:42	WG799995
1,2,4,5-Tetrachlorobenzene	ND		0.0100	1	07/01/2015 19:51	WG799995
2,6-Dichlorophenol	ND		0.0100	1	07/02/2015 13:42	WG799995
2,3,4,6-Tetrachlorophenol	ND		0.0100	1	07/01/2015 19:51	WG799995
(S) 2-Fluorophenol	*52.9*		*10.0-77.9*		*07/01/2015 19:51*	WG799995
(S) Phenol-d5	*36.7*		*5.00-70.1*		*07/01/2015 19:51*	WG799995
(S) Nitrobenzene-d5	*66.0*		*21.8-123*		*07/01/2015 19:51*	WG799995
(S) 2-Fluorobiphenyl	*74.4*		*29.5-131*		*07/01/2015 19:51*	WG799995
(S) 2,4,6-Tribromophenol	*85.8*		*11.2-130*		*07/01/2015 19:51*	WG799995
(S) p-Terphenyl-d14	*80.4*		*29.3-137*		*07/01/2015 19:51*	WG799995

Mercury by Method 7470A

Analyte	Result mg/l	Qualifier	RDL mg/l	Dilution	Analysis date / time	Batch
Mercury,Dissolved	ND		0.000200	1	07/02/2015 11:45	WG799696

Metals (ICP) by Method 6010B

Analyte	Result mg/l	Qualifier	RDL mg/l	Dilution	Analysis date / time	Batch
Arsenic,Dissolved	ND		0.0100	1	07/02/2015 00:40	WG799673
Barium,Dissolved	0.0888		0.00500	1	07/02/2015 00:40	WG799673
Cadmium,Dissolved	ND		0.00200	1	07/02/2015 00:40	WG799673
Chromium,Dissolved	ND		0.0100	1	07/02/2015 00:40	WG799673
Lead,Dissolved	ND		0.00500	1	07/02/2015 00:40	WG799673
Selenium,Dissolved	ND		0.0100	1	07/02/2015 00:40	WG799673
Silver,Dissolved	ND		0.00500	1	07/02/2015 00:40	WG799673

Volatile Organic Compounds (GC/MS) by Method 8260B

Analyte	Result mg/l	Qualifier	RDL mg/l	Dilution	Analysis date / time	Batch
Acetone	ND		0.0500	1	07/02/2015 11:40	WG799832
Acrolein	ND		0.0500	1	07/02/2015 11:40	WG799832
Acrylonitrile	ND		0.0100	1	07/02/2015 11:40	WG799832
Benzene	0.0343		0.00100	1	07/02/2015 11:40	WG799832
Bromobenzene	ND		0.00100	1	07/02/2015 11:40	WG799832
Bromodichloromethane	ND		0.00100	1	07/02/2015 11:40	WG799832
Bromoform	ND	J4	0.00100	1	07/02/2015 11:40	WG799832
Bromomethane	ND		0.00500	1	07/02/2015 11:40	WG799832
n-Butylbenzene	0.00276		0.00100	1	07/02/2015 11:40	WG799832
sec-Butylbenzene	0.00137		0.00100	1	07/02/2015 11:40	WG799832
tert-Butylbenzene	ND		0.00100	1	07/02/2015 11:40	WG799832
Carbon tetrachloride	ND		0.00100	1	07/02/2015 11:40	WG799832
Chlorobenzene	ND		0.00100	1	07/02/2015 11:40	WG799832
Chlorodibromomethane	ND		0.00100	1	07/02/2015 11:40	WG799832
Chloroethane	ND		0.00500	1	07/02/2015 11:40	WG799832
2-Chloroethyl vinyl ether	ND		0.0500	1	07/02/2015 11:40	WG799832
Chloroform	ND		0.00500	1	07/02/2015 11:40	WG799832
Chloromethane	ND		0.00250	1	07/02/2015 11:40	WG799832
2-Chlorotoluene	ND		0.00100	1	07/02/2015 11:40	WG799832
4-Chlorotoluene	ND		0.00100	1	07/02/2015 11:40	WG799832
1,2-Dibromo-3-Chloropropane	ND		0.00500	1	07/02/2015 11:40	WG799832
1,2-Dibromoethane	ND		0.00100	1	07/02/2015 11:40	WG799832
Dibromomethane	ND		0.00100	1	07/02/2015 11:40	WG799832
1,2-Dichlorobenzene	ND		0.00100	1	07/02/2015 11:40	WG799832
1,3-Dichlorobenzene	ND		0.00100	1	07/02/2015 11:40	WG799832
1,4-Dichlorobenzene	ND		0.00100	1	07/02/2015 11:40	WG799832
Dichlorodifluoromethane	ND		0.00500	1	07/02/2015 11:40	WG799832
1,1-Dichloroethane	ND		0.00100	1	07/02/2015 11:40	WG799832
1,2-Dichloroethane	ND		0.00100	1	07/02/2015 11:40	WG799832
1,1-Dichloroethene	ND		0.00100	1	07/02/2015 11:40	WG799832
cis-1,2-Dichloroethene	ND		0.00100	1	07/02/2015 11:40	WG799832
trans-1,2-Dichloroethene	ND		0.00100	1	07/02/2015 11:40	WG799832
1,2-Dichloropropane	ND		0.00100	1	07/02/2015 11:40	WG799832
1,1-Dichloropropene	ND		0.00100	1	07/02/2015 11:40	WG799832
1,3-Dichloropropane	ND		0.00100	1	07/02/2015 11:40	WG799832
cis-1,3-Dichloropropene	ND		0.00100	1	07/02/2015 11:40	WG799832
trans-1,3-Dichloropropene	ND		0.00100	1	07/02/2015 11:40	WG799832
2,2-Dichloropropane	ND		0.00100	1	07/02/2015 11:40	WG799832
Dicyclopentadiene	0.166		0.00100	1	07/02/2015 11:40	WG799832

Volatile Organic Compounds (GC/MS) by Method 8260B

Analyte	Result mg/l	Qualifier	RDL mg/l	Dilution	Analysis date / time	Batch
Di-isopropyl ether	ND		0.00100	1	07/02/2015 11:40	WG799832
Ethylbenzene	0.171		0.00100	1	07/02/2015 11:40	WG799832
Hexachloro-1,3-butadiene	ND		0.00100	1	07/02/2015 11:40	WG799832
Isopropylbenzene	0.0142		0.00100	1	07/02/2015 11:40	WG799832
p-Isopropyltoluene	0.00372		0.00100	1	07/02/2015 11:40	WG799832
2-Butanone (MEK)	ND		0.0100	1	07/02/2015 11:40	WG799832
Methylene Chloride	ND		0.00500	1	07/02/2015 11:40	WG799832
4-Methyl-2-pentanone (MIBK)	ND		0.0100	1	07/02/2015 11:40	WG799832
Methyl tert-butyl ether	ND		0.00100	1	07/02/2015 11:40	WG799832
Naphthalene	0.692		0.0500	10	07/02/2015 15:31	WG798776
n-Propylbenzene	0.0607		0.00100	1	07/02/2015 11:40	WG799832
Styrene	0.126		0.00100	1	07/02/2015 11:40	WG799832
1,1,1,2-Tetrachloroethane	ND		0.00100	1	07/02/2015 11:40	WG799832
1,1,2,2-Tetrachloroethane	ND		0.00100	1	07/02/2015 11:40	WG799832
1,1,2-Trichlorotrifluoroethane	ND		0.00100	1	07/02/2015 11:40	WG799832
Tetrachloroethene	ND		0.00100	1	07/02/2015 11:40	WG799832
Toluene	0.0637		0.00500	1	07/02/2015 11:40	WG799832
1,2,3-Trichlorobenzene	ND		0.00100	1	07/02/2015 11:40	WG799832
1,2,4-Trichlorobenzene	ND		0.00100	1	07/02/2015 11:40	WG799832
1,1,1-Trichloroethane	ND		0.00100	1	07/02/2015 11:40	WG799832
1,1,2-Trichloroethane	ND		0.00100	1	07/02/2015 11:40	WG799832
Trichloroethene	ND		0.00100	1	07/02/2015 11:40	WG799832
Trichlorofluoromethane	ND		0.00500	1	07/02/2015 11:40	WG799832
1,2,3-Trichloropropane	ND		0.00250	1	07/02/2015 11:40	WG799832
1,2,4-Trimethylbenzene	0.448		0.0100	10	07/02/2015 15:31	WG798776
1,2,3-Trimethylbenzene	0.177		0.00100	1	07/02/2015 11:40	WG799832
1,3,5-Trimethylbenzene	0.0765		0.00100	1	07/02/2015 11:40	WG799832
Vinyl chloride	ND		0.00100	1	07/02/2015 11:40	WG799832
Xylenes, Total	0.616		0.0300	10	07/02/2015 15:31	WG798776
(S) Toluene-d8	*105*		*90.0-115*		*07/02/2015 11:40*	WG799832
(S) Dibromofluoromethane	*93.7*		*79.0-121*		*07/02/2015 11:40*	WG799832
(S) 4-Bromofluorobenzene	*96.0*		*80.1-120*		*07/02/2015 11:40*	WG799832

Semi Volatile Organic Compounds (GC/MS) by Method 8270C

Analyte	Result mg/l	Qualifier	RDL mg/l	Dilution	Analysis date / time	Batch
Acenaphthene	ND		0.00100	1	07/01/2015 20:15	WG799995
Acenaphthylene	ND		0.00100	1	07/01/2015 20:15	WG799995
Anthracene	ND		0.00100	1	07/01/2015 20:15	WG799995
Benzo(a)anthracene	ND		0.00100	1	07/01/2015 20:15	WG799995
Benzo(b)fluoranthene	ND		0.00100	1	07/01/2015 20:15	WG799995
Benzo(k)fluoranthene	ND		0.00100	1	07/01/2015 20:15	WG799995
Benzo(g,h,i)perylene	ND		0.00100	1	07/01/2015 20:15	WG799995
Benzo(a)pyrene	ND		0.00100	1	07/01/2015 20:15	WG799995
Benzyl alcohol	ND		0.0100	1	07/01/2015 20:15	WG799995
Bis(2-chlorethoxy)methane	ND		0.0100	1	07/01/2015 20:15	WG799995
Bis(2-chloroethyl)ether	ND		0.0100	1	07/01/2015 20:15	WG799995
Bis(2-chloroisopropyl)ether	ND		0.0100	1	07/01/2015 20:15	WG799995
4-Bromophenyl-phenylether	ND		0.0100	1	07/01/2015 20:15	WG799995
4-Chloroaniline	ND		0.0100	1	07/01/2015 20:15	WG799995
2-Chloronaphthalene	ND		0.00100	1	07/01/2015 20:15	WG799995
4-Chlorophenyl-phenylether	ND		0.0100	1	07/01/2015 20:15	WG799995
Chrysene	ND		0.00100	1	07/01/2015 20:15	WG799995
Dibenz(a,h)anthracene	ND		0.00100	1	07/01/2015 20:15	WG799995
Dibenzofuran	ND		0.0100	1	07/01/2015 20:15	WG799995
3,3-Dichlorobenzidine	ND		0.0100	1	07/01/2015 20:15	WG799995

Semi Volatile Organic Compounds (GC/MS) by Method 8270C

Analyte	Result mg/l	Qualifier	RDL mg/l	Dilution	Analysis date / time	Batch
2,4-Dinitrotoluene	ND		0.0100	1	07/01/2015 20:15	WG799995
2,6-Dinitrotoluene	ND		0.0100	1	07/01/2015 20:15	WG799995
Fluoranthene	ND		0.00100	1	07/01/2015 20:15	WG799995
Fluorene	ND		0.00100	1	07/01/2015 20:15	WG799995
Hexachlorobenzene	ND		0.00100	1	07/01/2015 20:15	WG799995
Hexachloro-1,3-butadiene	ND		0.0100	1	07/01/2015 20:15	WG799995
Hexachlorocyclopentadiene	ND		0.0100	1	07/01/2015 20:15	WG799995
Hexachloroethane	ND		0.0100	1	07/01/2015 20:15	WG799995
Indeno(1,2,3-cd)pyrene	ND		0.00100	1	07/01/2015 20:15	WG799995
Isophorone	ND		0.0100	1	07/01/2015 20:15	WG799995
2-Methylnaphthalene	0.00301		0.00100	1	07/01/2015 20:15	WG799995
Naphthalene	0.543		0.0200	20	07/02/2015 11:58	WG799995
2-Nitroaniline	ND		0.0100	1	07/01/2015 20:15	WG799995
3-Nitroaniline	ND		0.0100	1	07/01/2015 20:15	WG799995
4-Nitroaniline	ND		0.0100	1	07/01/2015 20:15	WG799995
Nitrobenzene	ND		0.0100	1	07/01/2015 20:15	WG799995
n-Nitrosodiphenylamine	ND		0.0100	1	07/01/2015 20:15	WG799995
n-Nitrosodi-n-propylamine	ND		0.0100	1	07/01/2015 20:15	WG799995
Phenanthrene	ND		0.00100	1	07/01/2015 20:15	WG799995
Benzylbutyl phthalate	ND		0.00300	1	07/01/2015 20:15	WG799995
Bis(2-ethylhexyl)phthalate	ND		0.00300	1	07/01/2015 20:15	WG799995
Di-n-butyl phthalate	ND		0.00300	1	07/01/2015 20:15	WG799995
Diethyl phthalate	ND		0.00300	1	07/01/2015 20:15	WG799995
Dimethyl phthalate	ND		0.00300	1	07/01/2015 20:15	WG799995
Di-n-octyl phthalate	ND		0.00300	1	07/01/2015 20:15	WG799995
Pyrene	ND		0.00100	1	07/01/2015 20:15	WG799995
1,2,4-Trichlorobenzene	ND		0.0100	1	07/01/2015 20:15	WG799995
4-Chloro-3-methylphenol	ND		0.0100	1	07/01/2015 20:15	WG799995
2-Chlorophenol	ND		0.0100	1	07/01/2015 20:15	WG799995
2-Methylphenol	ND		0.0100	1	07/01/2015 20:15	WG799995
3&4-Methyl Phenol	ND		0.0100	1	07/01/2015 20:15	WG799995
2,4-Dichlorophenol	ND		0.0100	1	07/01/2015 20:15	WG799995
2,4-Dimethylphenol	ND		0.0100	1	07/01/2015 20:15	WG799995
4,6-Dinitro-2-methylphenol	ND		0.0100	1	07/01/2015 20:15	WG799995
2,4-Dinitrophenol	ND		0.0100	1	07/01/2015 20:15	WG799995
2-Nitrophenol	ND		0.0100	1	07/01/2015 20:15	WG799995
4-Nitrophenol	ND		0.0100	1	07/01/2015 20:15	WG799995
Pentachlorophenol	ND		0.00100	1	07/01/2015 20:15	WG799995
Phenol	ND		0.0100	1	07/01/2015 20:15	WG799995
2,4,5-Trichlorophenol	ND		0.0100	1	07/01/2015 20:15	WG799995
2,4,6-Trichlorophenol	ND		0.0100	1	07/01/2015 20:15	WG799995
Acetophenone	ND		0.0100	1	07/01/2015 20:15	WG799995
2-Acetylaminofluorene	ND		0.0100	1	07/02/2015 13:59	WG799995
4-Aminobiphenyl	ND		0.0100	1	07/02/2015 13:59	WG799995
Chlorobenzilate	ND		0.0500	1	07/02/2015 13:59	WG799995
Diallate	ND		0.0100	1	07/02/2015 13:59	WG799995
Dinoseb	ND		0.0500	1	07/02/2015 13:59	WG799995
Ethyl methanesulfonate	ND		0.0100	1	07/02/2015 13:59	WG799995
Famphur	ND		0.0200	1	07/02/2015 13:59	WG799995
Hexachloropropene	ND		0.0500	1	07/02/2015 13:59	WG799995
Isodrin	ND		0.0100	1	07/02/2015 13:59	WG799995
Isosafrole	0.0709		0.0100	1	07/02/2015 13:59	WG799995
Kepone	ND		0.0200	1	07/02/2015 13:59	WG799995
Methapyrilene	ND		0.0500	1	07/02/2015 13:59	WG799995
3-Methylcholanthrene	ND		0.0100	1	07/02/2015 13:59	WG799995
Methyl methanesulfonate	ND		0.0500	1	07/02/2015 13:59	WG799995

Semi Volatile Organic Compounds (GC/MS) by Method 8270C

Analyte	Result mg/l	Qualifier	RDL mg/l	Dilution	Analysis date / time	Batch
Methyl parathion	ND		0.0100	1	07/02/2015 13:59	WG799995
1,4-Naphthoquinone	ND		0.0500	1	07/02/2015 13:59	WG799995
1-Naphthylamine	ND		0.0100	1	07/02/2015 13:59	WG799995
2-Naphthylamine	ND		0.0100	1	07/02/2015 13:59	WG799995
n-Nitrosodi-n-butylamine	ND		0.0100	1	07/02/2015 13:59	WG799995
n-Nitrosodiethylamine	ND		0.0100	1	07/02/2015 13:59	WG799995
n-Nitrosodimethylamine	ND		0.0100	1	07/01/2015 20:15	WG799995
n-Nitrosomethylethylamine	ND		0.0100	1	07/02/2015 13:59	WG799995
N-Nitrosomorpholine	ND		0.0100	1	07/02/2015 13:59	WG799995
n-Nitrosopiperidine	ND		0.0100	1	07/02/2015 13:59	WG799995
n-Nitrosopyrrolidine	ND		0.0100	1	07/02/2015 13:59	WG799995
5-Nitro-o-toluidine	ND		0.0100	1	07/02/2015 13:59	WG799995
Ethyl Parathion	ND		0.0100	1	07/02/2015 13:59	WG799995
Pentachlorobenzene	ND		0.0100	1	07/02/2015 13:59	WG799995
Pentachloronitrobenzene	ND		0.0100	1	07/02/2015 13:59	WG799995
Phenacetin	ND		0.0100	1	07/02/2015 13:59	WG799995
p-Phenylenediamine	ND		6.90	1	07/02/2015 13:59	WG799995
Phorate	ND		0.0500	1	07/02/2015 13:59	WG799995
Pronamide	ND		0.0100	1	07/02/2015 13:59	WG799995
Dimethoate	ND		0.0500	1	07/02/2015 13:59	WG799995
P-(Dimethylamino) Azobenzene	ND		0.0100	1	07/02/2015 13:59	WG799995
Dimethylbenz (A) Anthracene	ND		0.0100	1	07/02/2015 13:59	WG799995
3,3-Dimethylbenzidine	ND		0.0100	1	07/02/2015 13:59	WG799995
1,3-Dinitrobenzene	ND		0.0100	1	07/02/2015 13:59	WG799995
Diphenylamine	ND		0.0100	1	07/02/2015 13:59	WG799995
Disulfoton	ND		0.0100	1	07/02/2015 13:59	WG799995
Safrole	ND		0.0100	1	07/02/2015 13:59	WG799995
Thionazin	ND		0.0100	1	07/02/2015 13:59	WG799995
o-Toluidine	ND		0.0100	1	07/02/2015 13:59	WG799995
O,O,O-Triethyl phosphorothioate	ND		0.0100	1	07/02/2015 13:59	WG799995
1,3,5-Trinitrobenzene	ND		0.0100	1	07/02/2015 13:59	WG799995
1,2,4,5-Tetrachlorobenzene	ND		0.0100	1	07/01/2015 20:15	WG799995
2,6-Dichlorophenol	ND		0.0100	1	07/02/2015 13:59	WG799995
2,3,4,6-Tetrachlorophenol	ND		0.0100	1	07/01/2015 20:15	WG799995
(S) 2-Fluorophenol	*56.0*		*10.0-77.9*		*07/01/2015 20:15*	WG799995
(S) Phenol-d5	*40.0*		*5.00-70.1*		*07/01/2015 20:15*	WG799995
(S) Nitrobenzene-d5	*71.2*		*21.8-123*		*07/01/2015 20:15*	WG799995
(S) 2-Fluorobiphenyl	*73.7*		*29.5-131*		*07/01/2015 20:15*	WG799995
(S) 2,4,6-Tribromophenol	*86.5*		*11.2-130*		*07/01/2015 20:15*	WG799995
(S) p-Terphenyl-d14	*73.1*		*29.3-137*		*07/01/2015 20:15*	WG799995

Mercury by Method 7470A

Analyte	Result mg/l	Qualifier	RDL mg/l	Dilution	Analysis date / time	Batch
Mercury,Dissolved	ND		0.000200	1	07/02/2015 11:47	WG799696

Metals (ICP) by Method 6010B

Analyte	Result mg/l	Qualifier	RDL mg/l	Dilution	Analysis date / time	Batch
Arsenic,Dissolved	ND		0.0100	1	07/02/2015 00:45	WG799673
Barium,Dissolved	0.141		0.00500	1	07/02/2015 00:45	WG799673
Cadmium,Dissolved	ND		0.00200	1	07/02/2015 00:45	WG799673
Chromium,Dissolved	ND		0.0100	1	07/02/2015 00:45	WG799673
Lead,Dissolved	0.00683		0.00500	1	07/02/2015 00:45	WG799673
Selenium,Dissolved	ND		0.0100	1	07/02/2015 00:45	WG799673
Silver,Dissolved	ND		0.00500	1	07/02/2015 00:45	WG799673

Volatile Organic Compounds (GC/MS) by Method 8260B

Analyte	Result mg/l	Qualifier	RDL mg/l	Dilution	Analysis date / time	Batch
Acetone	ND		0.0500	1	07/02/2015 12:00	WG799832
Acrolein	ND		0.0500	1	07/02/2015 12:00	WG799832
Acrylonitrile	ND		0.0100	1	07/02/2015 12:00	WG799832
Benzene	0.00893		0.00100	1	07/02/2015 12:00	WG799832
Bromobenzene	ND		0.00100	1	07/02/2015 12:00	WG799832
Bromodichloromethane	ND		0.00100	1	07/02/2015 12:00	WG799832
Bromoform	ND	J4	0.00100	1	07/02/2015 12:00	WG799832
Bromomethane	ND		0.00500	1	07/02/2015 12:00	WG799832
n-Butylbenzene	0.00924		0.00100	1	07/02/2015 12:00	WG799832
sec-Butylbenzene	0.00336		0.00100	1	07/02/2015 12:00	WG799832
tert-Butylbenzene	ND		0.00100	1	07/02/2015 12:00	WG799832
Carbon tetrachloride	ND		0.00100	1	07/02/2015 12:00	WG799832
Chlorobenzene	ND		0.00100	1	07/02/2015 12:00	WG799832
Chlorodibromomethane	ND		0.00100	1	07/02/2015 12:00	WG799832
Chloroethane	ND		0.00500	1	07/02/2015 12:00	WG799832
2-Chloroethyl vinyl ether	ND		0.0500	1	07/02/2015 12:00	WG799832
Chloroform	ND		0.00500	1	07/02/2015 12:00	WG799832
Chloromethane	ND		0.00250	1	07/02/2015 12:00	WG799832
2-Chlorotoluene	ND		0.00100	1	07/02/2015 12:00	WG799832
4-Chlorotoluene	ND		0.00100	1	07/02/2015 12:00	WG799832
1,2-Dibromo-3-Chloropropane	ND		0.00500	1	07/02/2015 12:00	WG799832
1,2-Dibromoethane	ND		0.00100	1	07/02/2015 12:00	WG799832
Dibromomethane	ND		0.00100	1	07/02/2015 12:00	WG799832
1,2-Dichlorobenzene	ND		0.00100	1	07/02/2015 12:00	WG799832
1,3-Dichlorobenzene	ND		0.00100	1	07/02/2015 12:00	WG799832
1,4-Dichlorobenzene	ND		0.00100	1	07/02/2015 12:00	WG799832
Dichlorodifluoromethane	ND		0.00500	1	07/02/2015 12:00	WG799832
1,1-Dichloroethane	ND		0.00100	1	07/02/2015 12:00	WG799832
1,2-Dichloroethane	ND		0.00100	1	07/02/2015 12:00	WG799832
1,1-Dichloroethene	ND		0.00100	1	07/02/2015 12:00	WG799832
cis-1,2-Dichloroethene	ND		0.00100	1	07/02/2015 12:00	WG799832
trans-1,2-Dichloroethene	ND		0.00100	1	07/02/2015 12:00	WG799832
1,2-Dichloropropane	ND		0.00100	1	07/02/2015 12:00	WG799832
1,1-Dichloropropene	ND		0.00100	1	07/02/2015 12:00	WG799832
1,3-Dichloropropane	ND		0.00100	1	07/02/2015 12:00	WG799832
cis-1,3-Dichloropropene	ND		0.00100	1	07/02/2015 12:00	WG799832
trans-1,3-Dichloropropene	ND		0.00100	1	07/02/2015 12:00	WG799832
2,2-Dichloropropane	ND		0.00100	1	07/02/2015 12:00	WG799832
Dicyclopentadiene	0.0521		0.00100	1	07/02/2015 12:00	WG799832

Volatile Organic Compounds (GC/MS) by Method 8260B

Analyte	Result mg/l	Qualifier	RDL mg/l	Dilution	Analysis date / time	Batch
Di-isopropyl ether	ND		0.00100	1	07/02/2015 12:00	WG799832
Ethylbenzene	0.0778		0.00100	1	07/02/2015 12:00	WG799832
Hexachloro-1,3-butadiene	ND		0.00100	1	07/02/2015 12:00	WG799832
Isopropylbenzene	0.0106		0.00100	1	07/02/2015 12:00	WG799832
p-Isopropyltoluene	0.00287		0.00100	1	07/02/2015 12:00	WG799832
2-Butanone (MEK)	ND		0.0100	1	07/02/2015 12:00	WG799832
Methylene Chloride	ND		0.00500	1	07/02/2015 12:00	WG799832
4-Methyl-2-pentanone (MIBK)	ND		0.0100	1	07/02/2015 12:00	WG799832
Methyl tert-butyl ether	ND		0.00100	1	07/02/2015 12:00	WG799832
Naphthalene	0.410		0.0250	5	07/02/2015 15:51	WG798776
n-Propylbenzene	0.0472		0.00100	1	07/02/2015 12:00	WG799832
Styrene	0.0163		0.00100	1	07/02/2015 12:00	WG799832
1,1,1,2-Tetrachloroethane	ND		0.00100	1	07/02/2015 12:00	WG799832
1,1,2,2-Tetrachloroethane	ND		0.00100	1	07/02/2015 12:00	WG799832
1,1,2-Trichlorotrifluoroethane	ND		0.00100	1	07/02/2015 12:00	WG799832
Tetrachloroethene	ND		0.00100	1	07/02/2015 12:00	WG799832
Toluene	ND		0.00500	1	07/02/2015 12:00	WG799832
1,2,3-Trichlorobenzene	ND		0.00100	1	07/02/2015 12:00	WG799832
1,2,4-Trichlorobenzene	ND		0.00100	1	07/02/2015 12:00	WG799832
1,1,1-Trichloroethane	ND		0.00100	1	07/02/2015 12:00	WG799832
1,1,2-Trichloroethane	ND		0.00100	1	07/02/2015 12:00	WG799832
Trichloroethene	ND		0.00100	1	07/02/2015 12:00	WG799832
Trichlorofluoromethane	ND		0.00500	1	07/02/2015 12:00	WG799832
1,2,3-Trichloropropane	ND		0.00250	1	07/02/2015 12:00	WG799832
1,2,4-Trimethylbenzene	0.160		0.00100	1	07/02/2015 12:00	WG799832
1,2,3-Trimethylbenzene	0.113		0.00100	1	07/02/2015 12:00	WG799832
1,3,5-Trimethylbenzene	0.0228		0.00100	1	07/02/2015 12:00	WG799832
Vinyl chloride	ND		0.00100	1	07/02/2015 12:00	WG799832
Xylenes, Total	0.239		0.00300	1	07/02/2015 12:00	WG799832
(S) Toluene-d8	*104*		*90.0-115*		*07/02/2015 12:00*	WG799832
(S) Dibromofluoromethane	*92.6*		*79.0-121*		*07/02/2015 12:00*	WG799832
(S) 4-Bromofluorobenzene	*95.6*		*80.1-120*		*07/02/2015 12:00*	WG799832

Semi Volatile Organic Compounds (GC/MS) by Method 8270C

Analyte	Result mg/l	Qualifier	RDL mg/l	Dilution	Analysis date / time	Batch
Acenaphthene	ND		0.00100	1	07/01/2015 20:38	WG799995
Acenaphthylene	ND		0.00100	1	07/01/2015 20:38	WG799995
Anthracene	ND		0.00100	1	07/01/2015 20:38	WG799995
Benzo(a)anthracene	ND		0.00100	1	07/01/2015 20:38	WG799995
Benzo(b)fluoranthene	ND		0.00100	1	07/01/2015 20:38	WG799995
Benzo(k)fluoranthene	ND		0.00100	1	07/01/2015 20:38	WG799995
Benzo(g,h,i)perylene	ND		0.00100	1	07/01/2015 20:38	WG799995
Benzo(a)pyrene	ND		0.00100	1	07/01/2015 20:38	WG799995
Benzyl alcohol	ND		0.0100	1	07/01/2015 20:38	WG799995
Bis(2-chlorethoxy)methane	ND		0.0100	1	07/01/2015 20:38	WG799995
Bis(2-chloroethyl)ether	ND		0.0100	1	07/01/2015 20:38	WG799995
Bis(2-chloroisopropyl)ether	ND		0.0100	1	07/01/2015 20:38	WG799995
4-Bromophenyl-phenylether	ND		0.0100	1	07/01/2015 20:38	WG799995
4-Chloroaniline	ND		0.0100	1	07/01/2015 20:38	WG799995
2-Chloronaphthalene	ND		0.00100	1	07/01/2015 20:38	WG799995
4-Chlorophenyl-phenylether	ND		0.0100	1	07/01/2015 20:38	WG799995
Chrysene	ND		0.00100	1	07/01/2015 20:38	WG799995
Dibenz(a,h)anthracene	ND		0.00100	1	07/01/2015 20:38	WG799995
Dibenzofuran	ND		0.0100	1	07/01/2015 20:38	WG799995
3,3-Dichlorobenzidine	ND		0.0100	1	07/01/2015 20:38	WG799995

Semi Volatile Organic Compounds (GC/MS) by Method 8270C

Analyte	Result mg/l	Qualifier	RDL mg/l	Dilution	Analysis date / time	Batch
2,4-Dinitrotoluene	ND		0.0100	1	07/01/2015 20:38	WG799995
2,6-Dinitrotoluene	ND		0.0100	1	07/01/2015 20:38	WG799995
Fluoranthene	ND		0.00100	1	07/01/2015 20:38	WG799995
Fluorene	ND		0.00100	1	07/01/2015 20:38	WG799995
Hexachlorobenzene	ND		0.00100	1	07/01/2015 20:38	WG799995
Hexachloro-1,3-butadiene	ND		0.0100	1	07/01/2015 20:38	WG799995
Hexachlorocyclopentadiene	ND		0.0100	1	07/01/2015 20:38	WG799995
Hexachloroethane	ND		0.0100	1	07/01/2015 20:38	WG799995
Indeno(1,2,3-cd)pyrene	ND		0.00100	1	07/01/2015 20:38	WG799995
Isophorone	ND		0.0100	1	07/01/2015 20:38	WG799995
2-Methylnaphthalene	0.00341		0.00100	1	07/01/2015 20:38	WG799995
Naphthalene	0.270		0.0200	20	07/02/2015 12:22	WG799995
2-Nitroaniline	ND		0.0100	1	07/01/2015 20:38	WG799995
3-Nitroaniline	ND		0.0100	1	07/01/2015 20:38	WG799995
4-Nitroaniline	ND		0.0100	1	07/01/2015 20:38	WG799995
Nitrobenzene	ND		0.0100	1	07/01/2015 20:38	WG799995
n-Nitrosodiphenylamine	ND		0.0100	1	07/01/2015 20:38	WG799995
n-Nitrosodi-n-propylamine	ND		0.0100	1	07/01/2015 20:38	WG799995
Phenanthrene	ND		0.00100	1	07/01/2015 20:38	WG799995
Benzylbutyl phthalate	ND		0.00300	1	07/01/2015 20:38	WG799995
Bis(2-ethylhexyl)phthalate	ND		0.00300	1	07/01/2015 20:38	WG799995
Di-n-butyl phthalate	ND		0.00300	1	07/01/2015 20:38	WG799995
Diethyl phthalate	ND		0.00300	1	07/01/2015 20:38	WG799995
Dimethyl phthalate	ND		0.00300	1	07/01/2015 20:38	WG799995
Di-n-octyl phthalate	ND		0.00300	1	07/01/2015 20:38	WG799995
Pyrene	ND		0.00100	1	07/01/2015 20:38	WG799995
1,2,4-Trichlorobenzene	ND		0.0100	1	07/01/2015 20:38	WG799995
4-Chloro-3-methylphenol	ND		0.0100	1	07/01/2015 20:38	WG799995
2-Chlorophenol	ND		0.0100	1	07/01/2015 20:38	WG799995
2-Methylphenol	ND		0.0100	1	07/01/2015 20:38	WG799995
3&4-Methyl Phenol	ND		0.0100	1	07/01/2015 20:38	WG799995
2,4-Dichlorophenol	ND		0.0100	1	07/01/2015 20:38	WG799995
2,4-Dimethylphenol	ND		0.0100	1	07/01/2015 20:38	WG799995
4,6-Dinitro-2-methylphenol	ND		0.0100	1	07/01/2015 20:38	WG799995
2,4-Dinitrophenol	ND		0.0100	1	07/01/2015 20:38	WG799995
2-Nitrophenol	ND		0.0100	1	07/01/2015 20:38	WG799995
4-Nitrophenol	ND		0.0100	1	07/01/2015 20:38	WG799995
Pentachlorophenol	ND		0.00100	1	07/01/2015 20:38	WG799995
Phenol	ND		0.0100	1	07/01/2015 20:38	WG799995
2,4,5-Trichlorophenol	ND		0.0100	1	07/01/2015 20:38	WG799995
2,4,6-Trichlorophenol	ND		0.0100	1	07/01/2015 20:38	WG799995
Acetophenone	ND		0.0100	1	07/01/2015 20:38	WG799995
2-Acetylaminofluorene	ND		0.0100	1	07/02/2015 14:16	WG799995
4-Aminobiphenyl	ND		0.0100	1	07/02/2015 14:16	WG799995
Chlorobenzilate	ND		0.0500	1	07/02/2015 14:16	WG799995
Diallate	ND		0.0100	1	07/02/2015 14:16	WG799995
Dinoseb	ND		0.0500	1	07/02/2015 14:16	WG799995
Ethyl methanesulfonate	ND		0.0100	1	07/02/2015 14:16	WG799995
Famphur	ND		0.0200	1	07/02/2015 14:16	WG799995
Hexachloropropene	ND		0.0500	1	07/02/2015 14:16	WG799995
Isodrin	ND		0.0100	1	07/02/2015 14:16	WG799995
Isosafrole	0.0177		0.0100	1	07/02/2015 14:16	WG799995
Kepone	ND		0.0200	1	07/02/2015 14:16	WG799995
Methapyrilene	ND		0.0500	1	07/02/2015 14:16	WG799995
3-Methylcholanthrene	ND		0.0100	1	07/02/2015 14:16	WG799995
Methyl methanesulfonate	ND		0.0500	1	07/02/2015 14:16	WG799995

Semi Volatile Organic Compounds (GC/MS) by Method 8270C

Analyte	Result mg/l	Qualifier	RDL mg/l	Dilution	Analysis date / time	Batch
Methyl parathion	ND		0.0100	1	07/02/2015 14:16	WG799995
1,4-Naphthoquinone	ND		0.0500	1	07/02/2015 14:16	WG799995
1-Naphthylamine	ND		0.0100	1	07/02/2015 14:16	WG799995
2-Naphthylamine	ND		0.0100	1	07/02/2015 14:16	WG799995
n-Nitrosodi-n-butylamine	ND		0.0100	1	07/02/2015 14:16	WG799995
n-Nitrosodiethylamine	ND		0.0100	1	07/02/2015 14:16	WG799995
n-Nitrosodimethylamine	ND		0.0100	1	07/01/2015 20:38	WG799995
n-Nitrosomethylethylamine	ND		0.0100	1	07/02/2015 14:16	WG799995
N-Nitrosomorpholine	ND		0.0100	1	07/02/2015 14:16	WG799995
n-Nitrosopiperidine	ND		0.0100	1	07/02/2015 14:16	WG799995
n-Nitrosopyrrolidine	ND		0.0100	1	07/02/2015 14:16	WG799995
5-Nitro-o-toluidine	ND		0.0100	1	07/02/2015 14:16	WG799995
Ethyl Parathion	ND		0.0100	1	07/02/2015 14:16	WG799995
Pentachlorobenzene	ND		0.0100	1	07/02/2015 14:16	WG799995
Pentachloronitrobenzene	ND		0.0100	1	07/02/2015 14:16	WG799995
Phenacetin	ND		0.0100	1	07/02/2015 14:16	WG799995
p-Phenylenediamine	ND		6.90	1	07/02/2015 14:16	WG799995
Phorate	ND		0.0500	1	07/02/2015 14:16	WG799995
Pronamide	ND		0.0100	1	07/02/2015 14:16	WG799995
Dimethoate	ND		0.0500	1	07/02/2015 14:16	WG799995
P-(Dimethylamino) Azobenzene	ND		0.0100	1	07/02/2015 14:16	WG799995
Dimethylbenz (A) Anthracene	ND		0.0100	1	07/02/2015 14:16	WG799995
3,3-Dimethylbenzidine	ND		0.0100	1	07/02/2015 14:16	WG799995
1,3-Dinitrobenzene	ND		0.0100	1	07/02/2015 14:16	WG799995
Diphenylamine	ND		0.0100	1	07/02/2015 14:16	WG799995
Disulfoton	ND		0.0100	1	07/02/2015 14:16	WG799995
Safrole	ND		0.0100	1	07/02/2015 14:16	WG799995
Thionazin	ND		0.0100	1	07/02/2015 14:16	WG799995
o-Toluidine	ND		0.0100	1	07/02/2015 14:16	WG799995
O,O,O-Triethyl phosphorothioate	ND		0.0100	1	07/02/2015 14:16	WG799995
1,3,5-Trinitrobenzene	ND		0.0100	1	07/02/2015 14:16	WG799995
1,2,4,5-Tetrachlorobenzene	ND		0.0100	1	07/01/2015 20:38	WG799995
2,6-Dichlorophenol	ND		0.0100	1	07/02/2015 14:16	WG799995
2,3,4,6-Tetrachlorophenol	ND		0.0100	1	07/01/2015 20:38	WG799995
(S) 2-Fluorophenol	*60.5*		*10.0-77.9*		*07/01/2015 20:38*	WG799995
(S) Phenol-d5	*41.6*		*5.00-70.1*		*07/01/2015 20:38*	WG799995
(S) Nitrobenzene-d5	*77.8*		*21.8-123*		*07/01/2015 20:38*	WG799995
(S) 2-Fluorobiphenyl	*77.0*		*29.5-131*		*07/01/2015 20:38*	WG799995
(S) 2,4,6-Tribromophenol	*95.6*		*11.2-130*		*07/01/2015 20:38*	WG799995
(S) p-Terphenyl-d14	*76.8*		*29.3-137*		*07/01/2015 20:38*	WG799995

Mercury by Method 7470A

Analyte	Result mg/l	Qualifier	RDL mg/l	Dilution	Analysis date / time	Batch
Mercury,Dissolved	ND		0.000200	1	07/02/2015 11:50	WG799696

Metals (ICP) by Method 6010B

Analyte	Result mg/l	Qualifier	RDL mg/l	Dilution	Analysis date / time	Batch
Arsenic,Dissolved	ND		0.0100	1	07/02/2015 00:50	WG799673
Barium,Dissolved	0.0510		0.00500	1	07/02/2015 00:50	WG799673
Cadmium,Dissolved	ND		0.00200	1	07/02/2015 00:50	WG799673
Chromium,Dissolved	ND		0.0100	1	07/02/2015 00:50	WG799673
Lead,Dissolved	0.00556		0.00500	1	07/02/2015 00:50	WG799673
Selenium,Dissolved	ND		0.0100	1	07/02/2015 00:50	WG799673
Silver,Dissolved	ND		0.00500	1	07/02/2015 00:50	WG799673

Volatile Organic Compounds (GC/MS) by Method 8260B

Analyte	Result mg/l	Qualifier	RDL mg/l	Dilution	Analysis date / time	Batch
Acetone	ND		0.0500	1	07/02/2015 12:21	WG799832
Acrolein	ND		0.0500	1	07/02/2015 12:21	WG799832
Acrylonitrile	ND		0.0100	1	07/02/2015 12:21	WG799832
Benzene	ND		0.00100	1	07/02/2015 12:21	WG799832
Bromobenzene	ND		0.00100	1	07/02/2015 12:21	WG799832
Bromodichloromethane	ND		0.00100	1	07/02/2015 12:21	WG799832
Bromoform	ND	J4	0.00100	1	07/02/2015 12:21	WG799832
Bromomethane	ND		0.00500	1	07/02/2015 12:21	WG799832
n-Butylbenzene	ND		0.00100	1	07/02/2015 12:21	WG799832
sec-Butylbenzene	ND		0.00100	1	07/02/2015 12:21	WG799832
tert-Butylbenzene	ND		0.00100	1	07/02/2015 12:21	WG799832
Carbon tetrachloride	ND		0.00100	1	07/02/2015 12:21	WG799832
Chlorobenzene	ND		0.00100	1	07/02/2015 12:21	WG799832
Chlorodibromomethane	ND		0.00100	1	07/02/2015 12:21	WG799832
Chloroethane	ND		0.00500	1	07/02/2015 12:21	WG799832
2-Chloroethyl vinyl ether	ND		0.0500	1	07/02/2015 12:21	WG799832
Chloroform	ND		0.00500	1	07/02/2015 12:21	WG799832
Chloromethane	ND		0.00250	1	07/02/2015 12:21	WG799832
2-Chlorotoluene	ND		0.00100	1	07/02/2015 12:21	WG799832
4-Chlorotoluene	ND		0.00100	1	07/02/2015 12:21	WG799832
1,2-Dibromo-3-Chloropropane	ND		0.00500	1	07/02/2015 12:21	WG799832
1,2-Dibromoethane	ND		0.00100	1	07/02/2015 12:21	WG799832
Dibromomethane	ND		0.00100	1	07/02/2015 12:21	WG799832
1,2-Dichlorobenzene	ND		0.00100	1	07/02/2015 12:21	WG799832
1,3-Dichlorobenzene	ND		0.00100	1	07/02/2015 12:21	WG799832
1,4-Dichlorobenzene	ND		0.00100	1	07/02/2015 12:21	WG799832
Dichlorodifluoromethane	ND		0.00500	1	07/02/2015 12:21	WG799832
1,1-Dichloroethane	ND		0.00100	1	07/02/2015 12:21	WG799832
1,2-Dichloroethane	ND		0.00100	1	07/02/2015 12:21	WG799832
1,1-Dichloroethene	ND		0.00100	1	07/02/2015 12:21	WG799832
cis-1,2-Dichloroethene	ND		0.00100	1	07/02/2015 12:21	WG799832
trans-1,2-Dichloroethene	ND		0.00100	1	07/02/2015 12:21	WG799832
1,2-Dichloropropane	ND		0.00100	1	07/02/2015 12:21	WG799832
1,1-Dichloropropene	ND		0.00100	1	07/02/2015 12:21	WG799832
1,3-Dichloropropane	ND		0.00100	1	07/02/2015 12:21	WG799832
cis-1,3-Dichloropropene	ND		0.00100	1	07/02/2015 12:21	WG799832
trans-1,3-Dichloropropene	ND		0.00100	1	07/02/2015 12:21	WG799832
2,2-Dichloropropane	ND		0.00100	1	07/02/2015 12:21	WG799832
Dicyclopentadiene	0.00175		0.00100	1	07/02/2015 12:21	WG799832

Volatile Organic Compounds (GC/MS) by Method 8260B

Analyte	Result mg/l	Qualifier	RDL mg/l	Dilution	Analysis date / time	Batch
Di-isopropyl ether	ND		0.00100	1	07/02/2015 12:21	WG799832
Ethylbenzene	ND		0.00100	1	07/02/2015 12:21	WG799832
Hexachloro-1,3-butadiene	ND		0.00100	1	07/02/2015 12:21	WG799832
Isopropylbenzene	ND		0.00100	1	07/02/2015 12:21	WG799832
p-Isopropyltoluene	ND		0.00100	1	07/02/2015 12:21	WG799832
2-Butanone (MEK)	ND		0.0100	1	07/02/2015 12:21	WG799832
Methylene Chloride	ND		0.00500	1	07/02/2015 12:21	WG799832
4-Methyl-2-pentanone (MIBK)	ND		0.0100	1	07/02/2015 12:21	WG799832
Methyl tert-butyl ether	ND		0.00100	1	07/02/2015 12:21	WG799832
Naphthalene	ND		0.00500	1	07/02/2015 14:53	WG798776
n-Propylbenzene	ND		0.00100	1	07/02/2015 12:21	WG799832
Styrene	ND		0.00100	1	07/02/2015 12:21	WG799832
1,1,1,2-Tetrachloroethane	ND		0.00100	1	07/02/2015 12:21	WG799832
1,1,2,2-Tetrachloroethane	ND		0.00100	1	07/02/2015 12:21	WG799832
1,1,2-Trichlorotrifluoroethane	ND		0.00100	1	07/02/2015 12:21	WG799832
Tetrachloroethene	ND		0.00100	1	07/02/2015 12:21	WG799832
Toluene	ND		0.00500	1	07/02/2015 12:21	WG799832
1,2,3-Trichlorobenzene	ND		0.00100	1	07/02/2015 12:21	WG799832
1,2,4-Trichlorobenzene	ND		0.00100	1	07/02/2015 12:21	WG799832
1,1,1-Trichloroethane	ND		0.00100	1	07/02/2015 12:21	WG799832
1,1,2-Trichloroethane	ND		0.00100	1	07/02/2015 12:21	WG799832
Trichloroethene	ND		0.00100	1	07/02/2015 12:21	WG799832
Trichlorofluoromethane	ND		0.00500	1	07/02/2015 12:21	WG799832
1,2,3-Trichloropropane	ND		0.00250	1	07/02/2015 12:21	WG799832
1,2,4-Trimethylbenzene	ND		0.00100	1	07/02/2015 12:21	WG799832
1,2,3-Trimethylbenzene	0.00113		0.00100	1	07/02/2015 12:21	WG799832
1,3,5-Trimethylbenzene	ND		0.00100	1	07/02/2015 12:21	WG799832
Vinyl chloride	ND		0.00100	1	07/02/2015 12:21	WG799832
Xylenes, Total	ND		0.00300	1	07/02/2015 12:21	WG799832
(S) Toluene-d8	*103*		*90.0-115*		*07/02/2015 12:21*	WG799832
(S) Dibromofluoromethane	*93.1*		*79.0-121*		*07/02/2015 12:21*	WG799832
(S) 4-Bromofluorobenzene	*91.7*		*80.1-120*		*07/02/2015 12:21*	WG799832

Semi Volatile Organic Compounds (GC/MS) by Method 8270C

Analyte	Result mg/l	Qualifier	RDL mg/l	Dilution	Analysis date / time	Batch
Acenaphthene	ND		0.00100	1	07/01/2015 21:01	WG799995
Acenaphthylene	ND		0.00100	1	07/01/2015 21:01	WG799995
Anthracene	ND		0.00100	1	07/01/2015 21:01	WG799995
Benzo(a)anthracene	ND		0.00100	1	07/01/2015 21:01	WG799995
Benzo(b)fluoranthene	ND		0.00100	1	07/01/2015 21:01	WG799995
Benzo(k)fluoranthene	ND		0.00100	1	07/01/2015 21:01	WG799995
Benzo(g,h,i)perylene	ND		0.00100	1	07/01/2015 21:01	WG799995
Benzo(a)pyrene	ND		0.00100	1	07/01/2015 21:01	WG799995
Benzyl alcohol	ND		0.0100	1	07/01/2015 21:01	WG799995
Bis(2-chlorethoxy)methane	ND		0.0100	1	07/01/2015 21:01	WG799995
Bis(2-chloroethyl)ether	ND		0.0100	1	07/01/2015 21:01	WG799995
Bis(2-chloroisopropyl)ether	ND		0.0100	1	07/01/2015 21:01	WG799995
4-Bromophenyl-phenylether	ND		0.0100	1	07/01/2015 21:01	WG799995
4-Chloroaniline	ND		0.0100	1	07/01/2015 21:01	WG799995
2-Chloronaphthalene	ND		0.00100	1	07/01/2015 21:01	WG799995
4-Chlorophenyl-phenylether	ND		0.0100	1	07/01/2015 21:01	WG799995
Chrysene	ND		0.00100	1	07/01/2015 21:01	WG799995
Dibenz(a,h)anthracene	ND		0.00100	1	07/01/2015 21:01	WG799995
Dibenzofuran	ND		0.0100	1	07/01/2015 21:01	WG799995
3,3-Dichlorobenzidine	ND		0.0100	1	07/01/2015 21:01	WG799995

Semi Volatile Organic Compounds (GC/MS) by Method 8270C

Analyte	Result mg/l	Qualifier	RDL mg/l	Dilution	Analysis date / time	Batch
2,4-Dinitrotoluene	ND		0.0100	1	07/01/2015 21:01	WG799995
2,6-Dinitrotoluene	ND		0.0100	1	07/01/2015 21:01	WG799995
Fluoranthene	ND		0.00100	1	07/01/2015 21:01	WG799995
Fluorene	ND		0.00100	1	07/01/2015 21:01	WG799995
Hexachlorobenzene	ND		0.00100	1	07/01/2015 21:01	WG799995
Hexachloro-1,3-butadiene	ND		0.0100	1	07/01/2015 21:01	WG799995
Hexachlorocyclopentadiene	ND		0.0100	1	07/01/2015 21:01	WG799995
Hexachloroethane	ND		0.0100	1	07/01/2015 21:01	WG799995
Indeno(1,2,3-cd)pyrene	ND		0.00100	1	07/01/2015 21:01	WG799995
Isophorone	ND		0.0100	1	07/01/2015 21:01	WG799995
2-Methylnaphthalene	ND		0.00100	1	07/01/2015 21:01	WG799995
Naphthalene	ND		0.00100	1	07/01/2015 21:01	WG799995
2-Nitroaniline	ND		0.0100	1	07/01/2015 21:01	WG799995
3-Nitroaniline	ND		0.0100	1	07/01/2015 21:01	WG799995
4-Nitroaniline	ND		0.0100	1	07/01/2015 21:01	WG799995
Nitrobenzene	ND		0.0100	1	07/01/2015 21:01	WG799995
n-Nitrosodiphenylamine	ND		0.0100	1	07/01/2015 21:01	WG799995
n-Nitrosodi-n-propylamine	ND		0.0100	1	07/01/2015 21:01	WG799995
Phenanthrene	ND		0.00100	1	07/01/2015 21:01	WG799995
Benzylbutyl phthalate	ND		0.00300	1	07/01/2015 21:01	WG799995
Bis(2-ethylhexyl)phthalate	ND		0.00300	1	07/01/2015 21:01	WG799995
Di-n-butyl phthalate	ND		0.00300	1	07/01/2015 21:01	WG799995
Diethyl phthalate	ND		0.00300	1	07/01/2015 21:01	WG799995
Dimethyl phthalate	ND		0.00300	1	07/01/2015 21:01	WG799995
Di-n-octyl phthalate	ND		0.00300	1	07/01/2015 21:01	WG799995
Pyrene	ND		0.00100	1	07/01/2015 21:01	WG799995
1,2,4-Trichlorobenzene	ND		0.0100	1	07/01/2015 21:01	WG799995
4-Chloro-3-methylphenol	ND		0.0100	1	07/01/2015 21:01	WG799995
2-Chlorophenol	ND		0.0100	1	07/01/2015 21:01	WG799995
2-Methylphenol	ND		0.0100	1	07/01/2015 21:01	WG799995
3&4-Methyl Phenol	ND		0.0100	1	07/01/2015 21:01	WG799995
2,4-Dichlorophenol	ND		0.0100	1	07/01/2015 21:01	WG799995
2,4-Dimethylphenol	ND		0.0100	1	07/01/2015 21:01	WG799995
4,6-Dinitro-2-methylphenol	ND		0.0100	1	07/01/2015 21:01	WG799995
2,4-Dinitrophenol	ND		0.0100	1	07/01/2015 21:01	WG799995
2-Nitrophenol	ND		0.0100	1	07/01/2015 21:01	WG799995
4-Nitrophenol	ND		0.0100	1	07/01/2015 21:01	WG799995
Pentachlorophenol	ND		0.00100	1	07/01/2015 21:01	WG799995
Phenol	ND		0.0100	1	07/01/2015 21:01	WG799995
2,4,5-Trichlorophenol	ND		0.0100	1	07/01/2015 21:01	WG799995
2,4,6-Trichlorophenol	ND		0.0100	1	07/01/2015 21:01	WG799995
Acetophenone	ND		0.0100	1	07/01/2015 21:01	WG799995
2-Acetylaminofluorene	ND		0.0100	1	07/02/2015 14:50	WG799995
4-Aminobiphenyl	ND		0.0100	1	07/02/2015 14:50	WG799995
Chlorobenzilate	ND		0.0500	1	07/02/2015 14:50	WG799995
Diallate	ND		0.0100	1	07/02/2015 14:50	WG799995
Dinoseb	ND		0.0500	1	07/02/2015 14:50	WG799995
Ethyl methanesulfonate	ND		0.0100	1	07/02/2015 14:50	WG799995
Famphur	ND		0.0200	1	07/02/2015 14:50	WG799995
Hexachloropropene	ND		0.0500	1	07/02/2015 14:50	WG799995
Isodrin	ND		0.0100	1	07/02/2015 14:50	WG799995
Isosafrole	ND		0.0100	1	07/02/2015 14:50	WG799995
Kepone	ND		0.0200	1	07/02/2015 14:50	WG799995
Methapyrilene	ND		0.0500	1	07/02/2015 14:50	WG799995
3-Methylcholanthrene	ND		0.0100	1	07/02/2015 14:50	WG799995
Methyl methanesulfonate	ND		0.0500	1	07/02/2015 14:50	WG799995

Semi Volatile Organic Compounds (GC/MS) by Method 8270C

Analyte	Result mg/l	Qualifier	RDL mg/l	Dilution	Analysis date / time	Batch
Methyl parathion	ND		0.0100	1	07/02/2015 14:50	WG799995
1,4-Naphthoquinone	ND		0.0500	1	07/02/2015 14:50	WG799995
1-Naphthylamine	ND		0.0100	1	07/02/2015 14:50	WG799995
2-Naphthylamine	ND		0.0100	1	07/02/2015 14:50	WG799995
n-Nitrosodi-n-butylamine	ND		0.0100	1	07/02/2015 14:50	WG799995
n-Nitrosodiethylamine	ND		0.0100	1	07/02/2015 14:50	WG799995
n-Nitrosodimethylamine	ND		0.0100	1	07/01/2015 21:01	WG799995
n-Nitrosomethylethylamine	ND		0.0100	1	07/02/2015 14:50	WG799995
N-Nitrosomorpholine	ND		0.0100	1	07/02/2015 14:50	WG799995
n-Nitrosopiperidine	ND		0.0100	1	07/02/2015 14:50	WG799995
n-Nitrosopyrrolidine	ND		0.0100	1	07/02/2015 14:50	WG799995
5-Nitro-o-toluidine	ND		0.0100	1	07/02/2015 14:50	WG799995
Ethyl Parathion	ND		0.0100	1	07/02/2015 14:50	WG799995
Pentachlorobenzene	ND		0.0100	1	07/02/2015 14:50	WG799995
Pentachloronitrobenzene	ND		0.0100	1	07/02/2015 14:50	WG799995
Phenacetin	ND		0.0100	1	07/02/2015 14:50	WG799995
p-Phenylenediamine	ND		6.90	1	07/02/2015 14:50	WG799995
Phorate	ND		0.0500	1	07/02/2015 14:50	WG799995
Pronamide	ND		0.0100	1	07/02/2015 14:50	WG799995
Dimethoate	ND		0.0500	1	07/02/2015 14:50	WG799995
P-(Dimethylamino) Azobenzene	ND		0.0100	1	07/02/2015 14:50	WG799995
Dimethylbenz (A) Anthracene	ND		0.0100	1	07/02/2015 14:50	WG799995
3,3-Dimethylbenzidine	ND		0.0100	1	07/02/2015 14:50	WG799995
1,3-Dinitrobenzene	ND		0.0100	1	07/02/2015 14:50	WG799995
Diphenylamine	ND		0.0100	1	07/02/2015 14:50	WG799995
Disulfoton	ND		0.0100	1	07/02/2015 14:50	WG799995
Safrole	ND		0.0100	1	07/02/2015 14:50	WG799995
Thionazin	ND		0.0100	1	07/02/2015 14:50	WG799995
o-Toluidine	ND		0.0100	1	07/02/2015 14:50	WG799995
O,O,O-Triethyl phosphorothioate	ND		0.0100	1	07/02/2015 14:50	WG799995
1,3,5-Trinitrobenzene	ND		0.0100	1	07/02/2015 14:50	WG799995
1,2,4,5-Tetrachlorobenzene	ND		0.0100	1	07/01/2015 21:01	WG799995
2,6-Dichlorophenol	ND		0.0100	1	07/02/2015 14:50	WG799995
2,3,4,6-Tetrachlorophenol	ND		0.0100	1	07/01/2015 21:01	WG799995
(S) 2-Fluorophenol	*60.8*		*10.0-77.9*		*07/01/2015 21:01*	WG799995
(S) Phenol-d5	*42.3*		*5.00-70.1*		*07/01/2015 21:01*	WG799995
(S) Nitrobenzene-d5	*78.6*		*21.8-123*		*07/01/2015 21:01*	WG799995
(S) 2-Fluorobiphenyl	*81.8*		*29.5-131*		*07/01/2015 21:01*	WG799995
(S) 2,4,6-Tribromophenol	*95.3*		*11.2-130*		*07/01/2015 21:01*	WG799995
(S) p-Terphenyl-d14	*87.9*		*29.3-137*		*07/01/2015 21:01*	WG799995

Mercury by Method 7470A

Analyte	Result mg/l	Qualifier	RDL mg/l	Dilution	Analysis date / time	Batch
Mercury,Dissolved	ND		0.000200	1	07/02/2015 11:00	WG799877

Metals (ICP) by Method 6010B

Analyte	Result mg/l	Qualifier	RDL mg/l	Dilution	Analysis date / time	Batch
Arsenic,Dissolved	ND		0.0100	1	07/02/2015 00:54	WG799673
Barium,Dissolved	0.0977		0.00500	1	07/02/2015 00:54	WG799673
Cadmium,Dissolved	ND		0.00200	1	07/02/2015 00:54	WG799673
Chromium,Dissolved	ND		0.0100	1	07/02/2015 00:54	WG799673
Lead,Dissolved	0.00661		0.00500	1	07/02/2015 00:54	WG799673
Selenium,Dissolved	ND		0.0100	1	07/02/2015 00:54	WG799673
Silver,Dissolved	ND		0.00500	1	07/02/2015 00:54	WG799673

Volatile Organic Compounds (GC/MS) by Method 8260B

Analyte	Result mg/l	Qualifier	RDL mg/l	Dilution	Analysis date / time	Batch
Acetone	ND		0.0500	1	07/02/2015 12:42	WG799832
Acrolein	ND		0.0500	1	07/02/2015 12:42	WG799832
Acrylonitrile	ND		0.0100	1	07/02/2015 12:42	WG799832
Benzene	0.0386		0.00100	1	07/02/2015 12:42	WG799832
Bromobenzene	ND		0.00100	1	07/02/2015 12:42	WG799832
Bromodichloromethane	ND		0.00100	1	07/02/2015 12:42	WG799832
Bromoform	ND	J4	0.00100	1	07/02/2015 12:42	WG799832
Bromomethane	ND		0.00500	1	07/02/2015 12:42	WG799832
n-Butylbenzene	0.00453		0.00100	1	07/02/2015 12:42	WG799832
sec-Butylbenzene	0.00207		0.00100	1	07/02/2015 12:42	WG799832
tert-Butylbenzene	ND		0.00100	1	07/02/2015 12:42	WG799832
Carbon tetrachloride	ND		0.00100	1	07/02/2015 12:42	WG799832
Chlorobenzene	ND		0.00100	1	07/02/2015 12:42	WG799832
Chlorodibromomethane	ND		0.00100	1	07/02/2015 12:42	WG799832
Chloroethane	ND		0.00500	1	07/02/2015 12:42	WG799832
2-Chloroethyl vinyl ether	ND		0.0500	1	07/02/2015 12:42	WG799832
Chloroform	ND		0.00500	1	07/02/2015 12:42	WG799832
Chloromethane	ND		0.00250	1	07/02/2015 12:42	WG799832
2-Chlorotoluene	ND		0.00100	1	07/02/2015 12:42	WG799832
4-Chlorotoluene	ND		0.00100	1	07/02/2015 12:42	WG799832
1,2-Dibromo-3-Chloropropane	ND		0.00500	1	07/02/2015 12:42	WG799832
1,2-Dibromoethane	ND		0.00100	1	07/02/2015 12:42	WG799832
Dibromomethane	ND		0.00100	1	07/02/2015 12:42	WG799832
1,2-Dichlorobenzene	ND		0.00100	1	07/02/2015 12:42	WG799832
1,3-Dichlorobenzene	ND		0.00100	1	07/02/2015 12:42	WG799832
1,4-Dichlorobenzene	ND		0.00100	1	07/02/2015 12:42	WG799832
Dichlorodifluoromethane	ND		0.00500	1	07/02/2015 12:42	WG799832
1,1-Dichloroethane	ND		0.00100	1	07/02/2015 12:42	WG799832
1,2-Dichloroethane	ND		0.00100	1	07/02/2015 12:42	WG799832
1,1-Dichloroethene	ND		0.00100	1	07/02/2015 12:42	WG799832
cis-1,2-Dichloroethene	ND		0.00100	1	07/02/2015 12:42	WG799832
trans-1,2-Dichloroethene	ND		0.00100	1	07/02/2015 12:42	WG799832
1,2-Dichloropropane	ND		0.00100	1	07/02/2015 12:42	WG799832
1,1-Dichloropropene	ND		0.00100	1	07/02/2015 12:42	WG799832
1,3-Dichloropropane	ND		0.00100	1	07/02/2015 12:42	WG799832
cis-1,3-Dichloropropene	ND		0.00100	1	07/02/2015 12:42	WG799832
trans-1,3-Dichloropropene	ND		0.00100	1	07/02/2015 12:42	WG799832
2,2-Dichloropropane	ND		0.00100	1	07/02/2015 12:42	WG799832
Dicyclopentadiene	0.199		0.00100	1	07/02/2015 12:42	WG799832

Volatile Organic Compounds (GC/MS) by Method 8260B

Analyte	Result mg/l	Qualifier	RDL mg/l	Dilution	Analysis date / time	Batch
Di-isopropyl ether	ND		0.00100	1	07/02/2015 12:42	WG799832
Ethylbenzene	0.239		0.0100	10	07/02/2015 16:10	WG798776
Hexachloro-1,3-butadiene	ND		0.00100	1	07/02/2015 12:42	WG799832
Isopropylbenzene	0.0200		0.00100	1	07/02/2015 12:42	WG799832
p-Isopropyltoluene	0.00600		0.00100	1	07/02/2015 12:42	WG799832
2-Butanone (MEK)	ND		0.0100	1	07/02/2015 12:42	WG799832
Methylene Chloride	ND		0.00500	1	07/02/2015 12:42	WG799832
4-Methyl-2-pentanone (MIBK)	ND		0.0100	1	07/02/2015 12:42	WG799832
Methyl tert-butyl ether	ND		0.00100	1	07/02/2015 12:42	WG799832
Naphthalene	0.979		0.0500	10	07/02/2015 16:10	WG798776
n-Propylbenzene	0.0896		0.00100	1	07/02/2015 12:42	WG799832
Styrene	0.165		0.00100	1	07/02/2015 12:42	WG799832
1,1,1,2-Tetrachloroethane	ND		0.00100	1	07/02/2015 12:42	WG799832
1,1,2,2-Tetrachloroethane	ND		0.00100	1	07/02/2015 12:42	WG799832
1,1,2-Trichlorotrifluoroethane	ND		0.00100	1	07/02/2015 12:42	WG799832
Tetrachloroethene	ND		0.00100	1	07/02/2015 12:42	WG799832
Toluene	0.0704		0.00500	1	07/02/2015 12:42	WG799832
1,2,3-Trichlorobenzene	ND		0.00100	1	07/02/2015 12:42	WG799832
1,2,4-Trichlorobenzene	ND		0.00100	1	07/02/2015 12:42	WG799832
1,1,1-Trichloroethane	ND		0.00100	1	07/02/2015 12:42	WG799832
1,1,2-Trichloroethane	ND		0.00100	1	07/02/2015 12:42	WG799832
Trichloroethene	ND		0.00100	1	07/02/2015 12:42	WG799832
Trichlorofluoromethane	ND		0.00500	1	07/02/2015 12:42	WG799832
1,2,3-Trichloropropane	ND		0.00250	1	07/02/2015 12:42	WG799832
1,2,4-Trimethylbenzene	0.644		0.0100	10	07/02/2015 16:10	WG798776
1,2,3-Trimethylbenzene	0.282		0.0100	10	07/02/2015 16:10	WG798776
1,3,5-Trimethylbenzene	0.0984		0.00100	1	07/02/2015 12:42	WG799832
Vinyl chloride	ND		0.00100	1	07/02/2015 12:42	WG799832
Xylenes, Total	0.766		0.0300	10	07/02/2015 16:10	WG798776
(S) Toluene-d8	*103*		*90.0-115*		*07/02/2015 12:42*	WG799832
(S) Dibromofluoromethane	*91.5*		*79.0-121*		*07/02/2015 12:42*	WG799832
(S) 4-Bromofluorobenzene	*95.6*		*80.1-120*		*07/02/2015 12:42*	WG799832

Semi Volatile Organic Compounds (GC/MS) by Method 8270C

Analyte	Result mg/l	Qualifier	RDL mg/l	Dilution	Analysis date / time	Batch
Acenaphthene	ND		0.00100	1	07/02/2015 15:50	WG800005
Acenaphthylene	ND		0.00100	1	07/02/2015 15:50	WG800005
Anthracene	ND		0.00100	1	07/02/2015 15:50	WG800005
Benzo(a)anthracene	ND		0.00100	1	07/02/2015 15:50	WG800005
Benzo(b)fluoranthene	ND		0.00100	1	07/02/2015 15:50	WG800005
Benzo(k)fluoranthene	ND		0.00100	1	07/02/2015 15:50	WG800005
Benzo(g,h,i)perylene	ND		0.00100	1	07/02/2015 15:50	WG800005
Benzo(a)pyrene	ND		0.00100	1	07/02/2015 15:50	WG800005
Benzyl alcohol	ND		0.0100	1	07/02/2015 15:50	WG800005
Bis(2-chlorethoxy)methane	ND		0.0100	1	07/02/2015 15:50	WG800005
Bis(2-chloroethyl)ether	ND		0.0100	1	07/02/2015 15:50	WG800005
Bis(2-chloroisopropyl)ether	ND		0.0100	1	07/02/2015 15:50	WG800005
4-Bromophenyl-phenylether	ND		0.0100	1	07/02/2015 15:50	WG800005
4-Chloroaniline	ND		0.0100	1	07/02/2015 15:50	WG800005
2-Chloronaphthalene	ND		0.00100	1	07/02/2015 15:50	WG800005
4-Chlorophenyl-phenylether	ND		0.0100	1	07/02/2015 15:50	WG800005
Chrysene	ND		0.00100	1	07/02/2015 15:50	WG800005
Dibenz(a,h)anthracene	ND		0.00100	1	07/02/2015 15:50	WG800005
Dibenzofuran	ND		0.0100	1	07/02/2015 15:50	WG800005
3,3-Dichlorobenzidine	ND		0.0100	1	07/02/2015 15:50	WG800005

Semi Volatile Organic Compounds (GC/MS) by Method 8270C

Analyte	Result mg/l	Qualifier	RDL mg/l	Dilution	Analysis date / time	Batch
2,4-Dinitrotoluene	ND		0.0100	1	07/02/2015 15:50	WG800005
2,6-Dinitrotoluene	ND		0.0100	1	07/02/2015 15:50	WG800005
Fluoranthene	ND		0.00100	1	07/02/2015 15:50	WG800005
Fluorene	ND		0.00100	1	07/02/2015 15:50	WG800005
Hexachlorobenzene	ND		0.00100	1	07/02/2015 15:50	WG800005
Hexachloro-1,3-butadiene	ND		0.0100	1	07/02/2015 15:50	WG800005
Hexachlorocyclopentadiene	ND		0.0100	1	07/02/2015 15:50	WG800005
Hexachloroethane	ND		0.0100	1	07/02/2015 15:50	WG800005
Indeno(1,2,3-cd)pyrene	ND		0.00100	1	07/02/2015 15:50	WG800005
Isophorone	ND		0.0100	1	07/02/2015 15:50	WG800005
2-Methylnaphthalene	0.00392		0.00100	1	07/02/2015 15:50	WG800005
Naphthalene	0.683		0.0200	20	07/02/2015 12:45	WG800005
2-Nitroaniline	ND		0.0100	1	07/02/2015 15:50	WG800005
3-Nitroaniline	ND		0.0100	1	07/02/2015 15:50	WG800005
4-Nitroaniline	ND		0.0100	1	07/02/2015 15:50	WG800005
Nitrobenzene	ND		0.0100	1	07/02/2015 15:50	WG800005
n-Nitrosodiphenylamine	ND		0.0100	1	07/02/2015 15:50	WG800005
n-Nitrosodi-n-propylamine	ND		0.0100	1	07/02/2015 15:50	WG800005
Phenanthrene	ND		0.00100	1	07/02/2015 15:50	WG800005
Benzylbutyl phthalate	ND		0.00300	1	07/02/2015 15:50	WG800005
Bis(2-ethylhexyl)phthalate	ND		0.00300	1	07/02/2015 15:50	WG800005
Di-n-butyl phthalate	ND		0.00300	1	07/02/2015 15:50	WG800005
Diethyl phthalate	ND		0.00300	1	07/02/2015 15:50	WG800005
Dimethyl phthalate	ND		0.00300	1	07/02/2015 15:50	WG800005
Di-n-octyl phthalate	ND		0.00300	1	07/02/2015 15:50	WG800005
Pyrene	ND		0.00100	1	07/02/2015 15:50	WG800005
1,2,4-Trichlorobenzene	ND		0.0100	1	07/02/2015 15:50	WG800005
4-Chloro-3-methylphenol	ND		0.0100	1	07/02/2015 15:50	WG800005
2-Chlorophenol	ND		0.0100	1	07/02/2015 15:50	WG800005
2-Methylphenol	ND		0.0100	1	07/02/2015 15:50	WG800005
3&4-Methyl Phenol	ND		0.0100	1	07/02/2015 15:50	WG800005
2,4-Dichlorophenol	ND		0.0100	1	07/02/2015 15:50	WG800005
2,4-Dimethylphenol	ND		0.0100	1	07/02/2015 15:50	WG800005
4,6-Dinitro-2-methylphenol	ND		0.0100	1	07/02/2015 15:50	WG800005
2,4-Dinitrophenol	ND		0.0100	1	07/02/2015 15:50	WG800005
2-Nitrophenol	ND		0.0100	1	07/02/2015 15:50	WG800005
4-Nitrophenol	ND		0.0100	1	07/02/2015 15:50	WG800005
Pentachlorophenol	ND		0.00100	1	07/02/2015 15:50	WG800005
Phenol	ND		0.0100	1	07/02/2015 15:50	WG800005
2,4,5-Trichlorophenol	ND		0.0100	1	07/02/2015 15:50	WG800005
2,4,6-Trichlorophenol	ND		0.0100	1	07/02/2015 15:50	WG800005
Acetophenone	ND		0.0100	1	07/02/2015 15:50	WG800005
2-Acetylaminofluorene	ND		0.0100	1	07/02/2015 14:33	WG800005
4-Aminobiphenyl	ND		0.0100	1	07/02/2015 14:33	WG800005
Chlorobenzilate	ND		0.0500	1	07/02/2015 14:33	WG800005
Diallate	ND		0.0100	1	07/02/2015 14:33	WG800005
Dinoseb	ND		0.0500	1	07/02/2015 14:33	WG800005
Ethyl methanesulfonate	ND		0.0100	1	07/02/2015 14:33	WG800005
Famphur	ND		0.0200	1	07/02/2015 14:33	WG800005
Hexachloropropene	ND		0.0500	1	07/02/2015 14:33	WG800005
Isodrin	ND		0.0100	1	07/02/2015 14:33	WG800005
Isosafrole	0.0709		0.0100	1	07/02/2015 14:33	WG800005
Kepone	ND		0.0200	1	07/02/2015 14:33	WG800005
Methapyrilene	ND		0.0500	1	07/02/2015 14:33	WG800005
3-Methylcholanthrene	ND		0.0100	1	07/02/2015 14:33	WG800005
Methyl methanesulfonate	ND		0.0500	1	07/02/2015 14:33	WG800005

Semi Volatile Organic Compounds (GC/MS) by Method 8270C

Analyte	Result mg/l	Qualifier	RDL mg/l	Dilution	Analysis date / time	Batch
Methyl parathion	ND		0.0100	1	07/02/2015 14:33	WG800005
1,4-Naphthoquinone	ND		0.0500	1	07/02/2015 14:33	WG800005
1-Naphthylamine	ND		0.0100	1	07/02/2015 14:33	WG800005
2-Naphthylamine	ND		0.0100	1	07/02/2015 14:33	WG800005
n-Nitrosodi-n-butylamine	ND		0.0100	1	07/02/2015 14:33	WG800005
n-Nitrosodiethylamine	ND		0.0100	1	07/02/2015 14:33	WG800005
n-Nitrosodimethylamine	ND		0.0100	1	07/02/2015 15:50	WG800005
n-Nitrosomethylethylamine	ND		0.0100	1	07/02/2015 14:33	WG800005
N-Nitrosomorpholine	ND		0.0100	1	07/02/2015 14:33	WG800005
n-Nitrosopiperidine	ND		0.0100	1	07/02/2015 14:33	WG800005
n-Nitrosopyrrolidine	ND		0.0100	1	07/02/2015 14:33	WG800005
5-Nitro-o-toluidine	ND		0.0100	1	07/02/2015 14:33	WG800005
Ethyl Parathion	ND		0.0100	1	07/02/2015 14:33	WG800005
Pentachlorobenzene	ND		0.0100	1	07/02/2015 14:33	WG800005
Pentachloronitrobenzene	ND		0.0100	1	07/02/2015 14:33	WG800005
Phenacetin	ND		0.0100	1	07/02/2015 14:33	WG800005
p-Phenylenediamine	ND		6.90	1	07/02/2015 14:33	WG800005
Phorate	ND		0.0500	1	07/02/2015 14:33	WG800005
Pronamide	ND		0.0100	1	07/02/2015 14:33	WG800005
Dimethoate	ND		0.0500	1	07/02/2015 14:33	WG800005
P-(Dimethylamino) Azobenzene	ND		0.0100	1	07/02/2015 14:33	WG800005
Dimethylbenz (A) Anthracene	ND		0.0100	1	07/02/2015 14:33	WG800005
3,3-Dimethylbenzidine	ND		0.0100	1	07/02/2015 14:33	WG800005
1,3-Dinitrobenzene	ND		0.0100	1	07/02/2015 14:33	WG800005
Diphenylamine	ND		0.0100	1	07/02/2015 14:33	WG800005
Disulfoton	ND		0.0100	1	07/02/2015 14:33	WG800005
Safrole	ND		0.0100	1	07/02/2015 14:33	WG800005
Thionazin	ND		0.0100	1	07/02/2015 14:33	WG800005
o-Toluidine	ND		0.0100	1	07/02/2015 14:33	WG800005
O,O,O-Triethyl phosphorothioate	ND		0.0100	1	07/02/2015 14:33	WG800005
1,3,5-Trinitrobenzene	ND		0.0100	1	07/02/2015 14:33	WG800005
1,2,4,5-Tetrachlorobenzene	ND		0.0100	1	07/02/2015 15:50	WG800005
2,6-Dichlorophenol	ND		0.0100	1	07/02/2015 14:33	WG800005
2,3,4,6-Tetrachlorophenol	ND		0.0100	1	07/02/2015 15:50	WG800005
(S) 2-Fluorophenol	*49.3*		*10.0-77.9*		*07/02/2015 15:50*	WG800005
(S) Phenol-d5	*36.1*		*5.00-70.1*		*07/02/2015 15:50*	WG800005
(S) Nitrobenzene-d5	*70.5*		*21.8-123*		*07/02/2015 15:50*	WG800005
(S) 2-Fluorobiphenyl	*70.5*		*29.5-131*		*07/02/2015 15:50*	WG800005
(S) 2,4,6-Tribromophenol	*90.9*		*11.2-130*		*07/02/2015 15:50*	WG800005
(S) p-Terphenyl-d14	*82.7*		*29.3-137*		*07/02/2015 15:50*	WG800005

Method Blank (MB)

(MB) 07/02/15 11:09

Analyte	MB Result mg/l	MB Qualifier	MB RDL mg/l
Mercury,Dissolved	ND		0.000200

Laboratory Control Sample (LCS) • Laboratory Control Sample Duplicate (LCSD)

(LCS) 07/02/15 11:12 • (LCSD) 07/02/15 11:15

Analyte	Spike Amount mg/l	LCS Result mg/l	LCSD Result mg/l	LCS Rec. %	LCSD Rec. %	Rec. Limits %	LCS Qualifier	LCSD Qualifier	RPD %	RPD Limits %
Mercury,Dissolved	0.00300	0.00298	0.00284	99	95	80-120			5	20

L774269-01 Original Sample (OS) • Matrix Spike (MS) • Matrix Spike Duplicate (MSD)

(OS) 07/02/15 11:18 • (MS) 07/02/15 11:27 • (MSD) 07/02/15 11:30

Analyte	Spike Amount mg/l	Original Result mg/l	MS Result mg/l	MSD Result mg/l	MS Rec. %	MSD Rec. %	Dilution	Rec. Limits %	MS Qualifier	MSD Qualifier	RPD %	RPD Limits %
Mercury,Dissolved	0.00300	0.0000179	0.00253	0.00256	84	85	1	75-125			1	20

Method Blank (MB)

(MB) 07/02/15 10:52

Analyte	MB Result mg/l	MB Qualifier	MB RDL mg/l
Mercury,Dissolved	ND		0.000200

Laboratory Control Sample (LCS) • Laboratory Control Sample Duplicate (LCSD)

(LCS) 07/02/15 10:55 • (LCSD) 07/02/15 10:57

Analyte	Spike Amount mg/l	LCS Result mg/l	LCSD Result mg/l	LCS Rec. %	LCSD Rec. %	Rec. Limits %	LCS Qualifier	LCSD Qualifier	RPD %	RPD Limits %
Mercury,Dissolved	0.00300	0.00311	0.00321	104	107	80-120			3	20

L774269-10 Original Sample (OS) • Matrix Spike (MS) • Matrix Spike Duplicate (MSD)

(OS) 07/02/15 11:00 • (MS) 07/02/15 11:03 • (MSD) 07/02/15 11:06

Analyte	Spike Amount mg/l	Original Result mg/l	MS Result mg/l	MSD Result mg/l	MS Rec. %	MSD Rec. %	Dilution	Rec. Limits %	MS Qualifier	MSD Qualifier	RPD %	RPD Limits %
Mercury,Dissolved	0.00300	0.0000215	0.00251	0.00246	83	81	1	75-125			2	20

Method Blank (MB)

(MB) 07/01/15 23:36

Analyte	MB Result mg/l	MB Qualifier	MB RDL mg/l
Arsenic,Dissolved	ND		0.0100
Barium,Dissolved	ND		0.00500
Cadmium,Dissolved	ND		0.00200
Chromium,Dissolved	ND		0.0100
Lead,Dissolved	ND		0.00500
Selenium,Dissolved	ND		0.0100
Silver,Dissolved	ND		0.00500

Laboratory Control Sample (LCS) • Laboratory Control Sample Duplicate (LCSD)

(LCS) 07/01/15 23:41 • (LCSD) 07/01/15 23:45

Analyte	Spike Amount mg/l	LCS Result mg/l	LCSD Result mg/l	LCS Rec. %	LCSD Rec. %	Rec. Limits %	LCS Qualifier	LCSD Qualifier	RPD %	RPD Limits %
Arsenic,Dissolved	1.00	1.06	1.07	106	107	80-120			1	20
Barium,Dissolved	1.00	1.08	1.08	108	108	80-120			0	20
Cadmium,Dissolved	1.00	1.12	1.12	112	112	80-120			0	20
Chromium,Dissolved	1.00	1.08	1.08	108	108	80-120			0	20
Lead,Dissolved	1.00	1.15	1.14	115	114	80-120			1	20
Selenium,Dissolved	1.00	1.16	1.17	116	117	80-120			1	20
Silver,Dissolved	1.00	1.13	1.12	113	112	80-120			1	20

L774231-01 Original Sample (OS) • Matrix Spike (MS) • Matrix Spike Duplicate (MSD)

(OS) 07/01/15 23:50 • (MS) 07/01/15 23:59 • (MSD) 07/02/15 00:03

Analyte	Spike Amount mg/l	Original Result mg/l	MS Result mg/l	MSD Result mg/l	MS Rec. %	MSD Rec. %	Dilution	Rec. Limits %	MS Qualifier	MSD Qualifier	RPD %	RPD Limits %
Arsenic,Dissolved	1.00	0.00489	1.12	1.11	112	110	1	75-125			1	20
Barium,Dissolved	1.00	0.0732	1.13	1.12	106	105	1	75-125			0	20
Cadmium,Dissolved	1.00	0.0000426	1.15	1.14	115	114	1	75-125			0	20
Chromium,Dissolved	1.00	0.00187	1.06	1.06	106	106	1	75-125			0	20
Lead,Dissolved	1.00	0.0129	1.15	1.15	114	114	1	75-125			0	20
Selenium,Dissolved	1.00	0.000475	1.24	1.22	124	122	1	75-125			2	20
Silver,Dissolved	1.00	ND	1.17	1.17	117	117	1	75-125			0	20

Method Blank (MB)

(MB) 07/02/15 13:56

Analyte	MB Result mg/l	MB Qualifier	MB RDL mg/l
Ethylbenzene	ND		0.00100
Naphthalene	ND		0.00500
1,2,3-Trimethylbenzene	ND		0.00100
1,2,4-Trimethylbenzene	ND		0.00100
Xylenes, Total	ND		0.00300

Laboratory Control Sample (LCS) • Laboratory Control Sample Duplicate (LCSD)

(LCS) 07/02/15 12:07 • (LCSD) 07/02/15 12:26

Analyte	Spike Amount mg/l	LCS Result mg/l	LCSD Result mg/l	LCS Rec. %	LCSD Rec. %	Rec. Limits %	LCS Qualifier	LCSD Qualifier	RPD %	RPD Limits %
Ethylbenzene	0.0250	0.0248	0.0248	99.3	99.3	80.9-121			0.0600	20
Naphthalene	0.0250	0.0250	0.0262	99.9	105	69.7-134			4.96	20
1,2,3-Trimethylbenzene	0.0250	0.0255	0.0262	102	105	79.9-118			2.58	20
1,2,4-Trimethylbenzene	0.0250	0.0239	0.0238	95.7	95.2	79.0-122			0.520	20
Xylenes, Total	0.0750	0.0722	0.0724	96.2	96.5	79.2-122			0.330	20

Method Blank (MB)

(MB) 07/02/15 06:53

Analyte	MB Result mg/l	MB Qualifier	MB RDL mg/l
Acetone	ND		0.0500
Acrolein	ND		0.0250
Acrylonitrile	ND		0.0100
Benzene	ND		0.00100
Bromobenzene	ND		0.00100
Bromodichloromethane	ND		0.00100
Bromoform	ND		0.00100
Bromomethane	ND		0.00500
n-Butylbenzene	ND		0.00100
sec-Butylbenzene	ND		0.00100
tert-Butylbenzene	ND		0.00100
Carbon tetrachloride	ND		0.00100
Chlorobenzene	ND		0.00100
Chlorodibromomethane	ND		0.00100
Chloroethane	ND		0.00500
2-Chloroethyl vinyl ether	ND		0.0500
Chloroform	ND		0.00500
Chloromethane	ND		0.00250
2-Chlorotoluene	ND		0.00100
4-Chlorotoluene	ND		0.00100
1,2-Dibromo-3-Chloropropane	ND		0.00500
1,2-Dibromoethane	ND		0.00100
Dibromomethane	ND		0.00100
1,2-Dichlorobenzene	ND		0.00100
1,3-Dichlorobenzene	ND		0.00100
1,4-Dichlorobenzene	ND		0.00100
Dichlorodifluoromethane	ND		0.00500
1,1-Dichloroethane	ND		0.00100
1,2-Dichloroethane	ND		0.00100
1,1-Dichloroethene	ND		0.00100
cis-1,2-Dichloroethene	ND		0.00100
trans-1,2-Dichloroethene	ND		0.00100
1,2-Dichloropropane	ND		0.00100
1,1-Dichloropropene	ND		0.00100
1,3-Dichloropropane	ND		0.00100
cis-1,3-Dichloropropene	ND		0.00100

Method Blank (MB)

(MB) 07/02/15 06:53

Analyte	MB Result mg/l	MB Qualifier	MB RDL mg/l
trans-1,3-Dichloropropene	ND		0.00100
2,2-Dichloropropane	ND		0.00100
Dicyclopentadiene	ND		0.00100
Di-isopropyl ether	ND		0.00100
Ethylbenzene	ND		0.00100
Hexachloro-1,3-butadiene	ND		0.00100
Isopropylbenzene	ND		0.00100
p-Isopropyltoluene	ND		0.00100
2-Butanone (MEK)	ND		0.0100
Methylene Chloride	ND		0.00500
4-Methyl-2-pentanone (MIBK)	ND		0.0100
Methyl tert-butyl ether	ND		0.00100
Naphthalene	ND		0.00500
n-Propylbenzene	ND		0.00100
Styrene	ND		0.00100
1,1,1,2-Tetrachloroethane	ND		0.00100
1,1,2,2-Tetrachloroethane	ND		0.00100
Tetrachloroethene	ND		0.00100
Toluene	ND		0.00500
1,1,2-Trichlorotrifluoroethane	ND		0.00100
1,2,3-Trichlorobenzene	ND		0.00100
1,2,4-Trichlorobenzene	ND		0.00100
1,1,1-Trichloroethane	ND		0.00100
1,1,2-Trichloroethane	ND		0.00100
Trichloroethene	ND		0.00100
Trichlorofluoromethane	ND		0.00500
1,2,3-Trichloropropane	ND		0.00100
1,2,3-Trimethylbenzene	ND		0.00100
1,2,4-Trimethylbenzene	ND		0.00100
1,3,5-Trimethylbenzene	ND		0.00100
Vinyl chloride	ND		0.00100
Xylenes, Total	ND		0.00300
(S) Toluene-d8	*102*		*90.0-115*
(S) Dibromofluoromethane	*92.5*		*79.0-121*
(S) 4-Bromofluorobenzene	*91.6*		*80.1-120*

Laboratory Control Sample (LCS) • Laboratory Control Sample Duplicate (LCSD)

(LCS) 07/02/15 05:24 • (LCSD) 07/02/15 05:45

Analyte	Spike Amount mg/l	LCS Result mg/l	LCSD Result mg/l	LCS Rec. %	LCSD Rec. %	Rec. Limits %	LCS Qualifier	LCSD Qualifier	RPD %	RPD Limits %
Acetone	0.125	0.133	0.133	106	106	28.7-175			0.200	20.9
Acrolein	0.125	0.0902	0.0899	72.1	71.9	40.4-172			0.340	20
Acrylonitrile	0.125	0.136	0.132	109	105	58.2-145			3.09	20
Benzene	0.0250	0.0276	0.0257	110	103	73.0-122			6.98	20
Bromobenzene	0.0250	0.0244	0.0230	97.6	92.2	81.5-115			5.72	20
Bromodichloromethane	0.0250	0.0237	0.0223	95.0	89.2	75.5-121			6.25	20
Bromoform	0.0250	0.0180	0.0176	71.8	70.6	71.5-131		J4	1.70	20
Bromomethane	0.0250	0.0362	0.0342	145	137	22.4-187			5.82	20
n-Butylbenzene	0.0250	0.0287	0.0268	115	107	75.9-134			7.12	20
sec-Butylbenzene	0.0250	0.0250	0.0231	100	92.3	80.6-126			8.02	20
tert-Butylbenzene	0.0250	0.0234	0.0219	93.6	87.7	79.3-127			6.51	20
Carbon tetrachloride	0.0250	0.0238	0.0225	95.3	90.0	70.9-129			5.70	20
Chlorobenzene	0.0250	0.0242	0.0228	96.8	91.3	79.7-122			5.77	20
Chlorodibromomethane	0.0250	0.0210	0.0205	84.0	81.8	78.2-124			2.63	20
Chloroethane	0.0250	0.0332	0.0302	133	121	41.2-153			9.51	20
2-Chloroethyl vinyl ether	0.125	0.125	0.118	99.9	94.7	23.4-162			5.43	23.5
Chloroform	0.0250	0.0254	0.0237	102	94.7	73.2-125			7.25	20
Chloromethane	0.0250	0.0267	0.0243	107	97.2	55.8-134			9.46	20
2-Chlorotoluene	0.0250	0.0240	0.0222	96.2	88.8	76.4-125			7.97	20
4-Chlorotoluene	0.0250	0.0246	0.0229	98.4	91.7	81.5-121			6.96	20
1,2-Dibromo-3-Chloropropane	0.0250	0.0181	0.0178	72.5	71.1	64.8-131			2.02	20
1,2-Dibromoethane	0.0250	0.0212	0.0208	84.6	83.2	79.8-122			1.72	20
Dibromomethane	0.0250	0.0232	0.0224	92.7	89.5	79.5-118			3.48	20
1,2-Dichlorobenzene	0.0250	0.0245	0.0233	98.1	93.0	84.7-118			5.26	20
1,3-Dichlorobenzene	0.0250	0.0227	0.0215	91.0	86.1	77.6-127			5.47	20
1,4-Dichlorobenzene	0.0250	0.0246	0.0234	98.5	93.4	82.2-114			5.31	20
Dichlorodifluoromethane	0.0250	0.0218	0.0199	87.2	79.5	56.0-134			9.18	20
1,1-Dichloroethane	0.0250	0.0275	0.0252	110	101	71.7-127			8.37	20
1,2-Dichloroethane	0.0250	0.0268	0.0255	107	102	65.3-126			5.03	20
1,1-Dichloroethene	0.0250	0.0304	0.0279	122	112	59.9-137			8.64	20
cis-1,2-Dichloroethene	0.0250	0.0253	0.0241	101	96.3	77.3-122			5.07	20
trans-1,2-Dichloroethene	0.0250	0.0248	0.0232	99.4	92.8	72.6-125			6.86	20
1,2-Dichloropropane	0.0250	0.0268	0.0252	107	101	77.4-125			6.09	20
1,1-Dichloropropene	0.0250	0.0247	0.0232	98.7	92.6	72.5-127			6.35	20
1,3-Dichloropropane	0.0250	0.0240	0.0232	96.0	92.7	80.6-115			3.49	20
cis-1,3-Dichloropropene	0.0250	0.0248	0.0233	99.3	93.4	77.7-124			6.19	20

Laboratory Control Sample (LCS) • Laboratory Control Sample Duplicate (LCSD)

(LCS) 07/02/15 05:24 • (LCSD) 07/02/15 05:45

Analyte	Spike Amount mg/l	LCS Result mg/l	LCSD Result mg/l	LCS Rec. %	LCSD Rec. %	Rec. Limits %	LCS Qualifier	LCSD Qualifier	RPD %	RPD Limits %
trans-1,3-Dichloropropene	0.0250	0.0222	0.0213	88.8	85.2	73.5-127			4.12	20
2,2-Dichloropropane	0.0250	0.0277	0.0247	111	98.6	61.3-134			11.6	20
Dicyclopentadiene	0.0250	0.0260	0.0241	104	96.2	73.4-126			7.57	20
Di-isopropyl ether	0.0250	0.0295	0.0275	118	110	65.1-135			7.02	20
Ethylbenzene	0.0250	0.0242	0.0230	96.8	91.8	80.9-121			5.28	20
Hexachloro-1,3-butadiene	0.0250	0.0208	0.0195	83.1	78.1	73.7-133			6.26	20
Isopropylbenzene	0.0250	0.0247	0.0229	98.9	91.4	81.6-124			7.83	20
p-Isopropyltoluene	0.0250	0.0250	0.0234	100	93.5	77.6-129			6.72	20
2-Butanone (MEK)	0.125	0.142	0.140	113	112	46.4-155			0.930	20
Methylene Chloride	0.0250	0.0246	0.0231	98.4	92.6	69.5-120			6.15	20
4-Methyl-2-pentanone (MIBK)	0.125	0.126	0.125	101	100	63.3-138			0.710	20
Methyl tert-butyl ether	0.0250	0.0249	0.0240	99.4	96.1	70.1-125			3.39	20
Naphthalene	0.0250	0.0206	0.0208	82.6	83.0	69.7-134			0.580	20
n-Propylbenzene	0.0250	0.0258	0.0240	103	95.9	81.9-122			7.25	20
Styrene	0.0250	0.0254	0.0239	102	95.4	79.9-124			6.23	20
1,1,1,2-Tetrachloroethane	0.0250	0.0220	0.0210	87.9	83.8	78.5-125			4.73	20
1,1,2,2-Tetrachloroethane	0.0250	0.0227	0.0218	90.8	87.0	79.3-123			4.20	20
Tetrachloroethene	0.0250	0.0216	0.0206	86.2	82.6	73.5-130			4.35	20
Toluene	0.0250	0.0254	0.0242	102	96.9	77.9-116			4.92	20
1,1,2-Trichlorotrifluoroethane	0.0250	0.0277	0.0256	111	103	62.0-141			7.62	20
1,2,3-Trichlorobenzene	0.0250	0.0220	0.0212	87.9	84.7	75.7-134			3.76	20
1,2,4-Trichlorobenzene	0.0250	0.0229	0.0220	91.7	88.0	76.1-136			4.16	20
1,1,1-Trichloroethane	0.0250	0.0236	0.0222	94.6	88.8	71.1-129			6.35	20
1,1,2-Trichloroethane	0.0250	0.0225	0.0220	90.0	87.8	81.6-120			2.47	20
Trichloroethene	0.0250	0.0236	0.0222	94.4	88.8	79.5-121			6.12	20
Trichlorofluoromethane	0.0250	0.0276	0.0253	111	101	49.1-157			9.01	20
1,2,3-Trichloropropane	0.0250	0.0218	0.0207	87.1	82.8	74.9-124			5.14	20
1,2,3-Trimethylbenzene	0.0250	0.0260	0.0247	104	98.6	79.9-118			5.22	20
1,2,4-Trimethylbenzene	0.0250	0.0239	0.0223	95.8	89.3	79.0-122			6.96	20
1,3,5-Trimethylbenzene	0.0250	0.0243	0.0225	97.3	90.2	81.0-123			7.53	20
Vinyl chloride	0.0250	0.0279	0.0256	112	102	61.5-134			8.94	20
Xylenes, Total	0.0750	0.0724	0.0683	96.5	91.1	79.2-122			5.73	20
(S) Toluene-d8				*103*	*104*	*90.0-115*				
(S) Dibromofluoromethane				*96.0*	*94.5*	*79.0-121*				
(S) 4-Bromofluorobenzene				*92.8*	*90.7*	*80.1-120*				

L774065-08 Original Sample (OS) • Matrix Spike (MS) • Matrix Spike Duplicate (MSD)

(OS) 07/02/15 08:36 • (MS) 07/02/15 07:14 • (MSD) 07/02/15 07:34

Analyte	Spike Amount mg/l	Original Result mg/l	MS Result mg/l	MSD Result mg/l	MS Rec. %	MSD Rec. %	Dilution	Rec. Limits %	MS Qualifier	MSD Qualifier	RPD %	RPD Limits %
Acetone	0.125	0.0149	0.0946	0.0922	63.8	61.9	1	25.0-156			2.59	21.5
Acrolein	0.125	ND	0.0772	0.0897	61.8	71.8	1	34.0-194			15.0	21.5
Acrylonitrile	0.125	ND	0.136	0.136	108	109	1	55.9-161			0.330	20
Benzene	0.0250	0.00199	0.0277	0.0281	103	104	1	58.6-133			1.20	20
Bromobenzene	0.0250	ND	0.0235	0.0236	94.1	94.6	1	70.6-125			0.550	20
Bromodichloromethane	0.0250	ND	0.0222	0.0228	88.8	91.0	1	69.2-127			2.49	20
Bromoform	0.0250	ND	0.0178	0.0179	71.4	71.6	1	66.3-140			0.400	20
Bromomethane	0.0250	ND	0.0332	0.0343	133	137	1	16.6-183			3.10	20.5
n-Butylbenzene	0.0250	ND	0.0272	0.0274	109	110	1	64.8-145			0.860	20
sec-Butylbenzene	0.0250	ND	0.0239	0.0244	95.5	97.5	1	66.8-139			2.11	20
tert-Butylbenzene	0.0250	ND	0.0227	0.0233	90.9	93.2	1	67.1-138			2.50	20
Carbon tetrachloride	0.0250	ND	0.0232	0.0237	92.6	94.7	1	60.6-139			2.24	20
Chlorobenzene	0.0250	ND	0.0233	0.0236	93.1	94.2	1	70.1-130			1.20	20
Chlorodibromomethane	0.0250	ND	0.0204	0.0208	81.8	83.2	1	71.6-132			1.71	20
Chloroethane	0.0250	ND	0.0329	0.0334	132	134	1	33.3-155			1.50	20
2-Chloroethyl vinyl ether	0.125	ND	0.116	0.121	92.9	96.8	1	5.00-149			4.17	40
Chloroform	0.0250	ND	0.0240	0.0240	95.9	96.0	1	66.1-133			0.0700	20
Chloromethane	0.0250	ND	0.0239	0.0250	95.4	100	1	40.7-139			4.73	20
2-Chlorotoluene	0.0250	ND	0.0230	0.0233	92.2	93.2	1	66.9-134			1.05	20
4-Chlorotoluene	0.0250	ND	0.0236	0.0237	94.4	94.8	1	66.8-134			0.390	20
1,2-Dibromo-3-Chloropropane	0.0250	ND	0.0196	0.0196	78.2	78.6	1	63.9-142			0.400	20.2
1,2-Dibromoethane	0.0250	ND	0.0213	0.0214	85.3	85.6	1	73.8-131			0.350	20
Dibromomethane	0.0250	ND	0.0222	0.0225	88.8	90.2	1	72.8-127			1.57	20
1,2-Dichlorobenzene	0.0250	ND	0.0229	0.0232	91.7	92.8	1	77.4-127			1.13	20
1,3-Dichlorobenzene	0.0250	ND	0.0215	0.0220	86.0	88.0	1	67.9-136			2.21	20
1,4-Dichlorobenzene	0.0250	ND	0.0231	0.0236	92.5	94.5	1	74.4-123			2.18	20
Dichlorodifluoromethane	0.0250	ND	0.0216	0.0210	86.4	83.9	1	42.2-146			2.98	20
1,1-Dichloroethane	0.0250	ND	0.0260	0.0263	104	105	1	64.0-134			1.16	20
1,2-Dichloroethane	0.0250	ND	0.0255	0.0257	102	103	1	60.7-132			0.590	20
1,1-Dichloroethene	0.0250	ND	0.0290	0.0293	116	117	1	48.8-144			1.27	20
cis-1,2-Dichloroethene	0.0250	ND	0.0246	0.0244	98.2	97.6	1	60.6-136			0.620	20
trans-1,2-Dichloroethene	0.0250	ND	0.0242	0.0243	96.7	97.2	1	61.0-132			0.540	20
1,2-Dichloropropane	0.0250	ND	0.0254	0.0256	101	102	1	69.7-130			0.780	20
1,1-Dichloropropene	0.0250	ND	0.0236	0.0240	94.2	96.0	1	61.5-136			1.87	20
1,3-Dichloropropane	0.0250	ND	0.0232	0.0237	92.8	94.7	1	74.3-123			2.04	20
cis-1,3-Dichloropropene	0.0250	ND	0.0230	0.0238	92.2	95.2	1	71.1-129			3.22	20

L774065-08 Original Sample (OS) • Matrix Spike (MS) • Matrix Spike Duplicate (MSD)

(OS) 07/02/15 08:36 • (MS) 07/02/15 07:14 • (MSD) 07/02/15 07:34

Analyte	Spike Amount mg/l	Original Result mg/l	MS Result mg/l	MSD Result mg/l	MS Rec. %	MSD Rec. %	Dilution	Rec. Limits %	MS Qualifier	MSD Qualifier	RPD %	RPD Limits %
trans-1,3-Dichloropropene	0.0250	ND	0.0209	0.0215	83.6	86.0	1	66.3-136			2.90	20
2,2-Dichloropropane	0.0250	ND	0.0250	0.0261	100	104	1	54.9-142			4.21	20
Dicyclopentadiene	0.0250	ND	0.0250	0.0256	99.9	102	1	52.6-145			2.46	20
Di-isopropyl ether	0.0250	ND	0.0274	0.0277	110	111	1	59.9-140			1.05	20
Ethylbenzene	0.0250	ND	0.0236	0.0241	94.4	96.3	1	62.7-136			2.02	20
Hexachloro-1,3-butadiene	0.0250	ND	0.0188	0.0198	75.4	79.2	1	61.1-144			4.94	20.1
Isopropylbenzene	0.0250	ND	0.0239	0.0241	95.7	96.4	1	67.4-136			0.760	20
p-Isopropyltoluene	0.0250	ND	0.0241	0.0243	96.6	97.3	1	62.8-143			0.740	20
2-Butanone (MEK)	0.125	0.00293	0.121	0.118	94.6	92.2	1	45.0-156			2.50	20.8
Methylene Chloride	0.0250	ND	0.0235	0.0236	94.0	94.5	1	61.5-125			0.570	20
4-Methyl-2-pentanone (MIBK)	0.125	ND	0.131	0.129	105	103	1	60.7-150			1.20	20
Methyl tert-butyl ether	0.0250	0.00118	0.0248	0.0254	94.6	97.0	1	61.4-136			2.40	20
Naphthalene	0.0250	ND	0.0205	0.0214	81.9	85.7	1	61.8-143			4.57	20
n-Propylbenzene	0.0250	ND	0.0251	0.0256	100	102	1	63.2-139			1.97	20
Styrene	0.0250	ND	0.0243	0.0247	97.3	98.7	1	68.2-133			1.42	20
1,1,1,2-Tetrachloroethane	0.0250	ND	0.0208	0.0215	83.3	85.8	1	70.5-132			2.95	20
1,1,2,2-Tetrachloroethane	0.0250	ND	0.0228	0.0230	91.3	91.8	1	64.9-145			0.530	20
Tetrachloroethene	0.0250	ND	0.0214	0.0219	85.8	87.5	1	57.4-141			1.99	20
Toluene	0.0250	ND	0.0243	0.0250	97.2	99.9	1	67.8-124			2.68	20
1,1,2-Trichlorotrifluoroethane	0.0250	ND	0.0272	0.0275	109	110	1	53.7-150			1.09	20
1,2,3-Trichlorobenzene	0.0250	ND	0.0203	0.0215	81.3	86.1	1	65.7-143			5.71	20
1,2,4-Trichlorobenzene	0.0250	ND	0.0217	0.0221	86.9	88.6	1	67.0-146			1.87	20
1,1,1-Trichloroethane	0.0250	ND	0.0228	0.0232	91.3	93.0	1	58.7-134			1.86	20
1,1,2-Trichloroethane	0.0250	ND	0.0220	0.0222	87.9	88.8	1	74.1-130			0.930	20
Trichloroethene	0.0250	ND	0.0227	0.0233	90.8	93.3	1	48.9-148			2.69	20
Trichlorofluoromethane	0.0250	ND	0.0268	0.0271	107	108	1	39.9-165			1.21	20
1,2,3-Trichloropropane	0.0250	ND	0.0221	0.0214	88.4	85.6	1	71.5-134			3.21	20
1,2,3-Trimethylbenzene	0.0250	0.000528	0.0247	0.0255	96.8	99.7	1	62.7-133			2.92	20
1,2,4-Trimethylbenzene	0.0250	0.000643	0.0237	0.0240	92.1	93.3	1	60.5-137			1.28	20
1,3,5-Trimethylbenzene	0.0250	ND	0.0235	0.0240	94.1	96.0	1	67.9-134			2.04	20
Vinyl chloride	0.0250	ND	0.0266	0.0271	106	109	1	44.3-143			2.13	20
Xylenes, Total	0.0750	0.00214	0.0725	0.0733	93.8	94.9	1	65.6-133			1.11	20
(S) Toluene-d8					*103*	*103*		*90.0-115*				
(S) Dibromofluoromethane					*94.4*	*93.4*		*79.0-121*				
(S) 4-Bromofluorobenzene					*93.8*	*92.6*		*80.1-120*				

Method Blank (MB)

(MB) 07/01/15 17:32

Analyte	MB Result mg/l	MB Qualifier	MB RDL mg/l
Acenaphthene	ND		0.00100
Acenaphthylene	ND		0.00100
Acetophenone	ND		0.0100
Anthracene	ND		0.00100
Benzo(a)anthracene	ND		0.00100
Benzo(b)fluoranthene	ND		0.00100
Benzo(k)fluoranthene	ND		0.00100
Benzo(g,h,i)perylene	ND		0.00100
Benzo(a)pyrene	ND		0.00100
Bis(2-chlorethoxy)methane	ND		0.0100
Bis(2-chloroethyl)ether	ND		0.0100
Bis(2-chloroisopropyl)ether	ND		0.0100
4-Bromophenyl-phenylether	ND		0.0100
4-Chloroaniline	ND		0.0100
2-Chloronaphthalene	ND		0.00100
4-Chlorophenyl-phenylether	ND		0.0100
Chrysene	ND		0.00100
Dibenz(a,h)anthracene	ND		0.00100
Dibenzofuran	ND		0.0100
3,3-Dichlorobenzidine	ND		0.0100
2,4-Dinitrotoluene	ND		0.0100
2,6-Dinitrotoluene	ND		0.0100
Fluoranthene	ND		0.00100
Fluorene	ND		0.00100
Hexachlorobenzene	ND		0.00100
Hexachloro-1,3-butadiene	ND		0.0100
Hexachlorocyclopentadiene	ND		0.0100
Hexachloroethane	ND		0.0100
Indeno(1,2,3-cd)pyrene	ND		0.00100
Isophorone	ND		0.0100
2-Methylnaphthalene	ND		0.00100
Naphthalene	ND		0.00100
2-Nitroaniline	ND		0.0100
3-Nitroaniline	ND		0.0100
4-Nitroaniline	ND		0.0100
Nitrobenzene	ND		0.0100

Method Blank (MB)

(MB) 07/01/15 17:32

Analyte	MB Result mg/l	MB Qualifier	MB RDL mg/l
n-Nitrosodimethylamine	ND		0.0100
n-Nitrosodiphenylamine	ND		0.0100
n-Nitrosodi-n-propylamine	ND		0.0100
Phenanthrene	ND		0.00100
Benzylbutyl phthalate	ND		0.00300
Bis(2-ethylhexyl)phthalate	ND		0.00300
Di-n-butyl phthalate	ND		0.00300
Diethyl phthalate	ND		0.00300
Dimethyl phthalate	ND		0.00300
Di-n-octyl phthalate	ND		0.00300
Pyrene	ND		0.00100
1,2,4-Trichlorobenzene	ND		0.0100
Benzyl Alcohol	ND		0.0100
4-Chloro-3-methylphenol	ND		0.0100
2-Chlorophenol	ND		0.0100
2-Methylphenol	ND		0.0100
3&4-Methyl Phenol	ND		0.0100
2,4-Dichlorophenol	ND		0.0100
2,4-Dimethylphenol	ND		0.0100
4,6-Dinitro-2-methylphenol	ND		0.0100
2,4-Dinitrophenol	ND		0.0100
2-Nitrophenol	ND		0.0100
4-Nitrophenol	ND		0.0100
Pentachlorophenol	ND		0.00100
2,3,4,6-Tetrachlorophenol	ND		0.0100
Phenol	ND		0.0100
1,2,4,5-Tetrachlorobenzene	ND		0.0100
2,4,5-Trichlorophenol	ND		0.0100
2,4,6-Trichlorophenol	ND		0.0100
(S) Nitrobenzene-d5	*80.9*		*21.8-123*
(S) 2-Fluorobiphenyl	*75.1*		*29.5-131*
(S) p-Terphenyl-d14	*87.0*		*29.3-137*
(S) Phenol-d5	*46.7*		*5.00-70.1*
(S) 2-Fluorophenol	*65.5*		*10.0-77.9*
(S) 2,4,6-Tribromophenol	*72.9*		*11.2-130*

Method Blank (MB)

(MB) 07/02/15 11:41

Analyte	MB Result mg/l	MB Qualifier	MB RDL mg/l
Safrole	ND		0.0100
Thionazin	ND		0.0100
o-Toluidine	ND		0.0100
O,O,O-Triethyl Phosphorothioate	ND		0.0100
1,3,5-Trinitrobenzene	ND		0.0100
Pentachlorobenzene	ND		0.0100
Pentachloronitrobenzene	ND		0.0100
Phenacetin	ND		0.0100
p-Phenylenediamine	ND		6.90
Phorate	ND		0.0500
Pronamide	ND		0.0100
5-Nitro-o-toluidine	ND		0.0100
n-Nitrosodiethylamine	ND		0.0100
n-Nitrosodi-n-butylamine	ND		0.0100
n-Nitrosomethylethylamine	ND		0.0100
n-Nitrosomorpholine	ND		0.0100
n-Nitrosopiperidine	ND		0.0100
n-Nitrosopyrrolidine	ND		0.0100
Kepone	ND		0.0200
Methapyrilene	ND		0.0500
3-Methylcholanthrene	ND		0.0100
Methyl methanesulfonate	ND		0.0500
Methyl parathion	ND		0.0100
1,4-Naphthoquinone	ND		0.0500
1-Naphthylamine	ND		0.0100
2-Naphthylamine	ND		0.0100
Ethyl methanesulfonate	ND		0.0100
Ethyl Parathion	ND		0.0100
Famphur	ND		0.0200
Hexachloropropene	ND		0.0500
Isodrin	ND		0.0100
Isosafrole	ND		0.0100
Dimethylbenz (A) Anthracene	ND		0.0100
3,3-Dimethylbenzidine	ND		0.0100
1,3-Dinitrobenzene	ND		0.0100
Diphenylamine	ND		0.0100

Method Blank (MB)

(MB) 07/02/15 11:41

Analyte	MB Result mg/l	MB Qualifier	MB RDL mg/l
Dinoseb	ND		0.0500
Disulfoton	ND		0.0100
2-Acetylaminofluorene	ND		0.0100
4-Aminobiphenyl	ND		0.0100
Chlorobenzilate	ND		0.0500
Diallate	ND		0.0100
2,6-Dichlorophenol	ND		0.0100
Dimethoate	ND		0.0500
P-(Dimethylamino) Azobenzene	ND		0.0100

Laboratory Control Sample (LCS) • Laboratory Control Sample Duplicate (LCSD)

(LCS) 07/01/15 16:46 • (LCSD) 07/01/15 17:09

Analyte	Spike Amount mg/l	LCS Result mg/l	LCSD Result mg/l	LCS Rec. %	LCSD Rec. %	Rec. Limits %	LCS Qualifier	LCSD Qualifier	RPD %	RPD Limits %
Acenaphthene	0.0500	0.0383	0.0373	76.7	74.6	38.7-109			2.76	21.5
Acenaphthylene	0.0500	0.0385	0.0380	77.0	76.0	36.0-106			1.40	21
Acetophenone	0.0500	0.0336	0.0330	67.3	66.1	41.6-104			1.83	24.8
Anthracene	0.0500	0.0411	0.0391	82.2	78.3	43.6-113			4.93	18.8
Benzo(a)anthracene	0.0500	0.0422	0.0395	84.3	79.0	51.2-112			6.54	20
Benzo(b)fluoranthene	0.0500	0.0405	0.0367	81.0	73.4	47.6-111			9.80	20
Benzo(k)fluoranthene	0.0500	0.0412	0.0382	82.4	76.4	49.4-114			7.48	20
Benzo(g,h,i)perylene	0.0500	0.0429	0.0391	85.7	78.1	45.2-117			9.32	20
Benzo(a)pyrene	0.0500	0.0408	0.0375	81.7	74.9	45.6-106			8.60	20
Bis(2-chlorethoxy)methane	0.0500	0.0379	0.0367	75.8	73.4	37.2-111			3.22	24.1
Bis(2-chloroethyl)ether	0.0500	0.0364	0.0348	72.8	69.7	22.6-108			4.41	27.9
Bis(2-chloroisopropyl)ether	0.0500	0.0371	0.0372	74.2	74.3	32.9-100			0.200	25.1
4-Bromophenyl-phenylether	0.0500	0.0419	0.0405	83.7	81.0	40.7-116			3.30	21
4-Chloroaniline	0.0500	0.0303	0.0287	60.6	57.5	32.0-104			5.31	26.4
2-Chloronaphthalene	0.0500	0.0376	0.0363	75.2	72.5	33.6-105			3.59	23
4-Chlorophenyl-phenylether	0.0500	0.0412	0.0400	82.4	79.9	39.0-113			3.02	20.9
Chrysene	0.0500	0.0384	0.0373	76.7	74.6	54.6-120			2.84	20
Dibenz(a,h)anthracene	0.0500	0.0413	0.0373	82.7	74.5	42.8-118			10.4	20
Dibenzofuran	0.0500	0.0408	0.0396	81.5	79.2	42.4-105			2.89	20
3,3-Dichlorobenzidine	0.0500	0.0427	0.0408	85.3	81.5	27.2-142			4.53	22.3
2,4-Dinitrotoluene	0.0500	0.0439	0.0439	87.8	87.8	31.2-105			0.0800	22

Laboratory Control Sample (LCS) • Laboratory Control Sample Duplicate (LCSD)

(LCS) 07/01/15 16:46 • (LCSD) 07/01/15 17:09

Analyte	Spike Amount mg/l	LCS Result mg/l	LCSD Result mg/l	LCS Rec. %	LCSD Rec. %	Rec. Limits %	LCS Qualifier	LCSD Qualifier	RPD %	RPD Limits %
2,6-Dinitrotoluene	0.0500	0.0425	0.0412	85.0	82.5	30.6-106			3.04	23.1
Fluoranthene	0.0500	0.0416	0.0405	83.3	81.0	45.9-115			2.81	20
Fluorene	0.0500	0.0398	0.0391	79.7	78.2	41.0-112			1.85	20.2
Hexachlorobenzene	0.0500	0.0440	0.0436	88.0	87.2	38.5-116			0.990	20.1
Hexachloro-1,3-butadiene	0.0500	0.0251	0.0269	50.1	53.9	16.1-104			7.27	31.2
Hexachlorocyclopentadiene	0.0500	0.0182	0.0184	36.4	36.9	10.0-121			1.28	27.9
Hexachloroethane	0.0500	0.0235	0.0263	47.1	52.6	16.5-89.8			11.1	30.7
Indeno(1,2,3-cd)pyrene	0.0500	0.0424	0.0382	84.8	76.3	45.0-116			10.6	20
Isophorone	0.0500	0.0417	0.0397	83.4	79.4	35.4-112			4.94	21.5
2-Methylnaphthalene	0.0500	0.0330	0.0323	65.9	64.7	33.8-98.6			1.94	24.2
Naphthalene	0.0500	0.0328	0.0323	65.5	64.6	32.2-101			1.46	23.8
2-Nitroaniline	0.0500	0.0429	0.0421	85.9	84.2	35.6-113			1.90	20.9
3-Nitroaniline	0.0500	0.0383	0.0377	76.6	75.3	33.6-103			1.71	21.8
4-Nitroaniline	0.0500	0.0543	0.0539	109	108	35.4-124			0.760	23.1
Nitrobenzene	0.0500	0.0375	0.0363	75.1	72.7	31.4-106			3.30	25.7
n-Nitrosodimethylamine	0.0500	0.0197	0.0188	39.3	37.5	10.0-80.1			4.72	37.5
n-Nitrosodiphenylamine	0.0500	0.0414	0.0396	82.8	79.2	44.4-113			4.49	20
n-Nitrosodi-n-propylamine	0.0500	0.0386	0.0387	77.1	77.4	33.2-106			0.340	23.7
Phenanthrene	0.0500	0.0400	0.0383	79.9	76.6	46.4-113			4.18	20
Benzylbutyl phthalate	0.0500	0.0403	0.0375	80.6	75.0	31.8-123			7.18	20.7
Bis(2-ethylhexyl)phthalate	0.0500	0.0373	0.0343	74.6	68.6	36.9-134			8.32	23.6
Di-n-butyl phthalate	0.0500	0.0422	0.0404	84.4	80.9	41.8-120			4.31	20.2
Diethyl phthalate	0.0500	0.0438	0.0430	87.5	86.0	36.5-129			1.75	20
Dimethyl phthalate	0.0500	0.0430	0.0416	85.9	83.2	35.3-128			3.29	20.8
Di-n-octyl phthalate	0.0500	0.0393	0.0368	78.6	73.6	39.7-112			6.56	21.1
Pyrene	0.0500	0.0386	0.0363	77.2	72.5	46.3-117			6.25	20
1,2,4-Trichlorobenzene	0.0500	0.0286	0.0292	57.1	58.5	22.9-96.1			2.34	27.5
Benzyl Alcohol	0.0500	0.0296	0.0289	59.2	57.8	30.1-89.2			2.37	24.8
4-Chloro-3-methylphenol	0.0500	0.0430	0.0413	85.9	82.6	35.7-100			3.91	22.9
2-Chlorophenol	0.0500	0.0365	0.0367	73.0	73.4	26.2-91.5			0.570	26.5
2-Methylphenol	0.0500	0.0338	0.0333	67.6	66.6	26.4-86.9			1.53	26.5
3&4-Methyl Phenol	0.0500	0.0370	0.0361	74.1	72.3	27.9-92.0			2.50	27
2,4-Dichlorophenol	0.0500	0.0419	0.0398	83.8	79.7	31.4-103			5.00	24.9
2,4-Dimethylphenol	0.0500	0.0412	0.0399	82.4	79.9	31.9-107			3.05	25.7
4,6-Dinitro-2-methylphenol	0.0500	0.0406	0.0407	81.2	81.4	18.4-148			0.240	24.4
2,4-Dinitrophenol	0.0500	0.0283	0.0299	56.6	59.8	24.2-128			5.38	20.5

Laboratory Control Sample (LCS) • Laboratory Control Sample Duplicate (LCSD)

(LCS) 07/01/15 16:46 • (LCSD) 07/01/15 17:09

Analyte	Spike Amount mg/l	LCS Result mg/l	LCSD Result mg/l	LCS Rec. %	LCSD Rec. %	Rec. Limits %	LCS Qualifier	LCSD Qualifier	RPD %	RPD Limits %
2-Nitrophenol	0.0500	0.0399	0.0383	79.9	76.6	25.9-106			4.24	26.9
4-Nitrophenol	0.0500	0.0227	0.0212	45.4	42.4	10.0-52.7			6.79	40
Pentachlorophenol	0.0500	0.0414	0.0404	82.7	80.8	10.0-97.4			2.35	35.1
Phenol	0.0500	0.0201	0.0196	40.3	39.3	10.0-57.9			2.50	35
1,2,4,5-Tetrachlorobenzene	0.0500	0.0344	0.0336	68.9	67.3	30.7-102			2.38	27.7
2,4,5-Trichlorophenol	0.0500	0.0437	0.0429	87.4	85.9	34.9-112			1.79	23.9
2,4,6-Trichlorophenol	0.0500	0.0425	0.0419	85.0	83.9	29.8-107			1.38	24.1
(S) Nitrobenzene-d5				*73.6*	*65.5*	*21.8-123*				
(S) 2-Fluorobiphenyl				*75.4*	*69.6*	*29.5-131*				
(S) p-Terphenyl-d14				*75.5*	*64.8*	*29.3-137*				
(S) Phenol-d5				*36.7*	*35.8*	*5.00-70.1*				
(S) 2-Fluorophenol				*56.5*	*54.1*	*10.0-77.9*				
(S) 2,4,6-Tribromophenol				*87.3*	*83.4*	*11.2-130*				

Method Blank (MB)

(MB) 07/02/15 15:27

Analyte	MB Result mg/l	MB Qualifier	MB RDL mg/l
Acenaphthene	ND		0.00100
Acenaphthylene	ND		0.00100
Acetophenone	ND		0.0100
Anthracene	ND		0.00100
Benzo(a)anthracene	ND		0.00100
Benzo(b)fluoranthene	ND		0.00100
Benzo(k)fluoranthene	ND		0.00100
Benzo(g,h,i)perylene	ND		0.00100
Benzo(a)pyrene	ND		0.00100
Bis(2-chlorethoxy)methane	ND		0.0100
Bis(2-chloroethyl)ether	ND		0.0100
Bis(2-chloroisopropyl)ether	ND		0.0100
4-Bromophenyl-phenylether	ND		0.0100
4-Chloroaniline	ND		0.0100
2-Chloronaphthalene	ND		0.00100
4-Chlorophenyl-phenylether	ND		0.0100
Chrysene	ND		0.00100
Dibenz(a,h)anthracene	ND		0.00100
Dibenzofuran	ND		0.0100
3,3-Dichlorobenzidine	ND		0.0100
2,4-Dinitrotoluene	ND		0.0100
2,6-Dinitrotoluene	ND		0.0100
Fluoranthene	ND		0.00100
Fluorene	ND		0.00100
Hexachlorobenzene	ND		0.00100
Hexachloro-1,3-butadiene	ND		0.0100
Hexachlorocyclopentadiene	ND		0.0100
Hexachloroethane	ND		0.0100
Indeno(1,2,3-cd)pyrene	ND		0.00100
Isophorone	ND		0.0100
2-Methylnaphthalene	ND		0.00100
Naphthalene	ND		0.00100
2-Nitroaniline	ND		0.0100
3-Nitroaniline	ND		0.0100
4-Nitroaniline	ND		0.0100
Nitrobenzene	ND		0.0100

Method Blank (MB)

(MB) 07/02/15 15:27

Analyte	MB Result mg/l	MB Qualifier	MB RDL mg/l
n-Nitrosodimethylamine	ND		0.0100
n-Nitrosodiphenylamine	ND		0.0100
n-Nitrosodi-n-propylamine	ND		0.0100
Phenanthrene	ND		0.00100
Benzylbutyl phthalate	ND		0.00300
Bis(2-ethylhexyl)phthalate	ND		0.00300
Di-n-butyl phthalate	ND		0.00300
Diethyl phthalate	ND		0.00300
Dimethyl phthalate	ND		0.00300
Di-n-octyl phthalate	ND		0.00300
Pyrene	ND		0.00100
1,2,4-Trichlorobenzene	ND		0.0100
Benzyl Alcohol	ND		0.0100
4-Chloro-3-methylphenol	ND		0.0100
2-Chlorophenol	ND		0.0100
2-Methylphenol	ND		0.0100
3&4-Methyl Phenol	ND		0.0100
2,4-Dichlorophenol	ND		0.0100
2,4-Dimethylphenol	ND		0.0100
4,6-Dinitro-2-methylphenol	ND		0.0100
2,4-Dinitrophenol	ND		0.0100
2-Nitrophenol	ND		0.0100
4-Nitrophenol	ND		0.0100
Pentachlorophenol	ND		0.00100
2,3,4,6-Tetrachlorophenol	ND		0.0100
Phenol	ND		0.0100
1,2,4,5-Tetrachlorobenzene	ND		0.0100
2,4,5-Trichlorophenol	ND		0.0100
2,4,6-Trichlorophenol	ND		0.0100
(S) Nitrobenzene-d5	*63.7*		*21.8-123*
(S) 2-Fluorobiphenyl	*72.1*		*29.5-131*
(S) p-Terphenyl-d14	*70.5*		*29.3-137*
(S) Phenol-d5	*36.1*		*5.00-70.1*
(S) 2-Fluorophenol	*54.1*		*10.0-77.9*
(S) 2,4,6-Tribromophenol	*66.6*		*11.2-130*

Method Blank (MB)

(MB) 07/02/15 11:58

Analyte	MB Result mg/l	MB Qualifier	MB RDL mg/l
Safrole	ND		0.0100
Thionazin	ND		0.0100
o-Toluidine	ND		0.0100
O,O,O-Triethyl Phosphorothioate	ND		0.0100
1,3,5-Trinitrobenzene	ND		0.0100
Pentachlorobenzene	ND		0.0100
Pentachloronitrobenzene	ND		0.0100
Phenacetin	ND		0.0100
p-Phenylenediamine	ND		6.90
Phorate	ND		0.0500
Pronamide	ND		0.0100
5-Nitro-o-toluidine	ND		0.0100
n-Nitrosodiethylamine	ND		0.0100
n-Nitrosodi-n-butylamine	ND		0.0100
n-Nitrosomethylethylamine	ND		0.0100
n-Nitrosomorpholine	ND		0.0100
n-Nitrosopiperidine	ND		0.0100
n-Nitrosopyrrolidine	ND		0.0100
Kepone	ND		0.0200
Methapyrilene	ND		0.0500
3-Methylcholanthrene	ND		0.0100
Methyl methanesulfonate	ND		0.0500
Methyl parathion	ND		0.0100
1,4-Naphthoquinone	ND		0.0500
1-Naphthylamine	ND		0.0100
2-Naphthylamine	ND		0.0100
Ethyl methanesulfonate	ND		0.0100
Ethyl Parathion	ND		0.0100
Famphur	ND		0.0200
Hexachloropropene	ND		0.0500
Isodrin	ND		0.0100
Isosafrole	ND		0.0100
Dimethylbenz (A) Anthracene	ND		0.0100
3,3-Dimethylbenzidine	ND		0.0100
1,3-Dinitrobenzene	ND		0.0100
Diphenylamine	ND		0.0100

Method Blank (MB)

(MB) 07/02/15 11:58

Analyte	MB Result mg/l	MB Qualifier	MB RDL mg/l
Dinoseb	ND		0.0500
Disulfoton	ND		0.0100
2-Acetylaminofluorene	ND		0.0100
4-Aminobiphenyl	ND		0.0100
Chlorobenzilate	ND		0.0500
Diallate	ND		0.0100
2,6-Dichlorophenol	ND		0.0100
Dimethoate	ND		0.0500
P-(Dimethylamino) Azobenzene	ND		0.0100

Laboratory Control Sample (LCS) • Laboratory Control Sample Duplicate (LCSD)

(LCS) 07/02/15 14:41 • (LCSD) 07/02/15 15:04

Analyte	Spike Amount mg/l	LCS Result mg/l	LCSD Result mg/l	LCS Rec. %	LCSD Rec. %	Rec. Limits %	LCS Qualifier	LCSD Qualifier	RPD %	RPD Limits %
Acenaphthene	0.0500	0.0388	0.0391	77.5	78.1	38.7-109			0.820	21.5
Acenaphthylene	0.0500	0.0385	0.0391	77.0	78.1	36.0-106			1.40	21
Acetophenone	0.0500	0.0314	0.0315	62.9	63.0	41.6-104			0.120	24.8
Anthracene	0.0500	0.0398	0.0413	79.5	82.7	43.6-113			3.89	18.8
Benzo(a)anthracene	0.0500	0.0428	0.0444	85.7	88.9	51.2-112			3.64	20
Benzo(b)fluoranthene	0.0500	0.0391	0.0418	78.2	83.6	47.6-111			6.62	20
Benzo(k)fluoranthene	0.0500	0.0390	0.0421	78.1	84.1	49.4-114			7.45	20
Benzo(g,h,i)perylene	0.0500	0.0414	0.0437	82.7	87.4	45.2-117			5.54	20
Benzo(a)pyrene	0.0500	0.0393	0.0422	78.7	84.3	45.6-106			6.93	20
Bis(2-chlorethoxy)methane	0.0500	0.0359	0.0361	71.9	72.2	37.2-111			0.490	24.1
Bis(2-chloroethyl)ether	0.0500	0.0347	0.0337	69.4	67.3	22.6-108			3.08	27.9
Bis(2-chloroisopropyl)ether	0.0500	0.0368	0.0360	73.5	71.9	32.9-100			2.23	25.1
4-Bromophenyl-phenylether	0.0500	0.0415	0.0425	83.1	85.0	40.7-116			2.31	21
4-Chloroaniline	0.0500	0.0286	0.0302	57.1	60.4	32.0-104			5.60	26.4
2-Chloronaphthalene	0.0500	0.0385	0.0393	77.0	78.5	33.6-105			1.91	23
4-Chlorophenyl-phenylether	0.0500	0.0400	0.0414	80.1	82.8	39.0-113			3.29	20.9
Chrysene	0.0500	0.0393	0.0412	78.6	82.5	54.6-120			4.82	20
Dibenz(a,h)anthracene	0.0500	0.0393	0.0423	78.5	84.7	42.8-118			7.48	20
Dibenzofuran	0.0500	0.0400	0.0404	80.0	80.7	42.4-105			0.900	20
3,3-Dichlorobenzidine	0.0500	0.0424	0.0453	84.7	90.6	27.2-142			6.75	22.3
2,4-Dinitrotoluene	0.0500	0.0427	0.0433	85.5	86.7	31.2-105			1.40	22

Laboratory Control Sample (LCS) • Laboratory Control Sample Duplicate (LCSD)

(LCS) 07/02/15 14:41 • (LCSD) 07/02/15 15:04

Analyte	Spike Amount mg/l	LCS Result mg/l	LCSD Result mg/l	LCS Rec. %	LCSD Rec. %	Rec. Limits %	LCS Qualifier	LCSD Qualifier	RPD %	RPD Limits %
2,6-Dinitrotoluene	0.0500	0.0414	0.0426	82.7	85.1	30.6-106			2.86	23.1
Fluoranthene	0.0500	0.0409	0.0419	81.8	83.8	45.9-115			2.40	20
Fluorene	0.0500	0.0394	0.0403	78.9	80.6	41.0-112			2.15	20.2
Hexachlorobenzene	0.0500	0.0448	0.0457	89.6	91.4	38.5-116			2.08	20.1
Hexachloro-1,3-butadiene	0.0500	0.0316	0.0334	63.2	66.9	16.1-104			5.62	31.2
Hexachlorocyclopentadiene	0.0500	0.0210	0.0208	41.9	41.6	10.0-121			0.750	27.9
Hexachloroethane	0.0500	0.0296	0.0313	59.3	62.6	16.5-89.8			5.49	30.7
Indeno(1,2,3-cd)pyrene	0.0500	0.0407	0.0434	81.4	86.8	45.0-116			6.47	20
Isophorone	0.0500	0.0393	0.0400	78.6	79.9	35.4-112			1.71	21.5
2-Methylnaphthalene	0.0500	0.0334	0.0342	66.8	68.5	33.8-98.6			2.39	24.2
Naphthalene	0.0500	0.0329	0.0342	65.8	68.5	32.2-101			3.97	23.8
2-Nitroaniline	0.0500	0.0417	0.0423	83.3	84.5	35.6-113			1.42	20.9
3-Nitroaniline	0.0500	0.0370	0.0376	74.1	75.2	33.6-103			1.49	21.8
4-Nitroaniline	0.0500	0.0505	0.0525	101	105	35.4-124			3.96	23.1
Nitrobenzene	0.0500	0.0358	0.0366	71.5	73.2	31.4-106			2.30	25.7
n-Nitrosodimethylamine	0.0500	0.0175	0.0185	35.0	37.0	10.0-80.1			5.39	37.5
n-Nitrosodiphenylamine	0.0500	0.0403	0.0418	80.6	83.5	44.4-113			3.54	20
n-Nitrosodi-n-propylamine	0.0500	0.0369	0.0372	73.7	74.4	33.2-106			0.920	23.7
Phenanthrene	0.0500	0.0392	0.0408	78.4	81.7	46.4-113			4.05	20
Benzylbutyl phthalate	0.0500	0.0400	0.0424	80.1	84.9	31.8-123			5.80	20.7
Bis(2-ethylhexyl)phthalate	0.0500	0.0380	0.0391	76.0	78.2	36.9-134			2.97	23.6
Di-n-butyl phthalate	0.0500	0.0408	0.0431	81.7	86.2	41.8-120			5.32	20.2
Diethyl phthalate	0.0500	0.0428	0.0434	85.6	86.9	36.5-129			1.45	20
Dimethyl phthalate	0.0500	0.0422	0.0430	84.4	86.0	35.3-128			1.88	20.8
Di-n-octyl phthalate	0.0500	0.0404	0.0415	80.8	83.0	39.7-112			2.66	21.1
Pyrene	0.0500	0.0391	0.0408	78.1	81.5	46.3-117			4.24	20
1,2,4-Trichlorobenzene	0.0500	0.0320	0.0332	64.1	66.3	22.9-96.1			3.50	27.5
Benzyl Alcohol	0.0500	0.0283	0.0279	56.5	55.7	30.1-89.2			1.49	24.8
4-Chloro-3-methylphenol	0.0500	0.0394	0.0409	78.8	81.9	35.7-100			3.83	22.9
2-Chlorophenol	0.0500	0.0352	0.0349	70.4	69.8	26.2-91.5			0.830	26.5
2-Methylphenol	0.0500	0.0330	0.0312	65.9	62.5	26.4-86.9			5.33	26.5
3&4-Methyl Phenol	0.0500	0.0353	0.0349	70.6	69.9	27.9-92.0			1.07	27
2,4-Dichlorophenol	0.0500	0.0389	0.0398	77.9	79.7	31.4-103			2.28	24.9
2,4-Dimethylphenol	0.0500	0.0375	0.0385	75.0	77.0	31.9-107			2.65	25.7
4,6-Dinitro-2-methylphenol	0.0500	0.0386	0.0400	77.2	80.0	18.4-148			3.55	24.4
2,4-Dinitrophenol	0.0500	0.0271	0.0261	54.2	52.2	24.2-128			3.66	20.5

Laboratory Control Sample (LCS) • Laboratory Control Sample Duplicate (LCSD)

(LCS) 07/02/15 14:41 • (LCSD) 07/02/15 15:04

Analyte	Spike Amount mg/l	LCS Result mg/l	LCSD Result mg/l	LCS Rec. %	LCSD Rec. %	Rec. Limits %	LCS Qualifier	LCSD Qualifier	RPD %	RPD Limits %
2-Nitrophenol	0.0500	0.0381	0.0383	76.2	76.5	25.9-106			0.440	26.9
4-Nitrophenol	0.0500	0.0181	0.0212	36.2	42.5	10.0-52.7			15.9	40
Pentachlorophenol	0.0500	0.0385	0.0414	77.0	82.8	10.0-97.4			7.34	35.1
Phenol	0.0500	0.0194	0.0190	38.9	37.9	10.0-57.9			2.51	35
1,2,4,5-Tetrachlorobenzene	0.0500	0.0358	0.0367	71.6	73.4	30.7-102			2.47	27.7
2,4,5-Trichlorophenol	0.0500	0.0421	0.0430	84.2	86.0	34.9-112			2.05	23.9
2,4,6-Trichlorophenol	0.0500	0.0419	0.0422	83.9	84.3	29.8-107			0.540	24.1
(S) Nitrobenzene-d5				*68.9*	*68.6*	*21.8-123*				
(S) 2-Fluorobiphenyl				*76.3*	*76.0*	*29.5-131*				
(S) p-Terphenyl-d14				*75.6*	*79.9*	*29.3-137*				
(S) Phenol-d5				*35.2*	*35.8*	*5.00-70.1*				
(S) 2-Fluorophenol				*51.8*	*50.8*	*10.0-77.9*				
(S) 2,4,6-Tribromophenol				*83.1*	*89.7*	*11.2-130*				

1 Cp
2 Tc
3 Ss
4 Cn
5 Sr
6 Qc
7 Gl
8 Al
9 Sc

Abbreviations and Definitions

SDG	Sample Delivery Group.
MDL	Method Detection Limit.
RDL	Reported Detection Limit.
ND,U	Not detected at the Reporting Limit (or MDL where applicable).
RPD	Relative Percent Difference.
(dry)	Results are reported based on the dry weight of the sample. [this will only be present on a dry report basis for soils].
Original Sample	The non-spiked sample in the prep batch used to determine the Relative Percent Difference (RPD) from a quality control sample. The Original Sample may not be included within the reported SDG.
(S)	Surrogate (Surrogate Standard) - Analytes added to every blank, sample, Laboratory Control Sample/Duplicate and Matrix Spike/Duplicate; used to evaluate analytical efficiency by measuring recovery. Surrogates are not expected to be detected in all environmental media.
Rec.	Recovery.
SDL	Sample Detection Limit.
MQL	Method Quantitation Limit.
Unadj. MQL	Unadjusted Method Quantitation Limit.

Qualifier	Description
J4	The associated batch QC was outside the established quality control range for accuracy.

ACCREDITATIONS & LOCATIONS

ESC Lab Sciences is the only environmental laboratory accredited/certified to support your work nationwide from one location. One phone call, one point of contact, one laboratory. No other lab is as accessible or prepared to handle your needs throughout the country. Our capacity and capability from our single location laboratory is comparable to the collective totals of the network laboratories in our industry. The most significant benefit to our "one location" design is the design of our laboratory campus. The model is conducive to accelerated productivity, decreasing turn-around time, and preventing cross contamination, thus protecting sample integrity. Our focus on premium quality and prompt service allows us to be **YOUR LAB OF CHOICE.**

State Accreditations

Alabama	40660
Alaska	UST-080
Arizona	AZ0612
Arkansas	88-0469
California	01157CA
Colorado	TN00003
Conneticut	PH-0197
Florida	E87487
Georgia	NELAP
Georgia [1]	923
Idaho	TN00003
Illinois	200008
Indiana	C-TN-01
Iowa	364
Kansas	E-10277
Kentucky [1]	90010
Kentucky [2]	16
Louisiana	AI30792
Maine	TN0002
Maryland	324
Massachusetts	M-TN003
Michigan	9958
Minnesota	047-999-395
Mississippi	TN00003
Missouri	340
Montana	CERT0086
Nebraska	NE-OS-15-05
Nevada	TN-03-2002-34
New Hampshire	2975
New Jersey–NELAP	TN002
New Mexico	TN00003
New York	11742
North Carolina	Env375
North Carolina [1]	DW21704
North Carolina [2]	41
North Dakota	R-140
Ohio–VAP	CL0069
Oklahoma	9915
Oregon	TN200002
Pennsylvania	68-02979
Rhode Island	221
South Carolina	84004
South Dakota	n/a
Tennessee [1 4]	2006
Texas	T 104704245-07-TX
Texas [5]	LAB0152
Utah	6157585858
Vermont	VT2006
Virginia	109
Washington	C1915
West Virginia	233
Wisconsin	9980939910
Wyoming	A2LA

[1.] Drinking Water [2.] Underground Storage Tanks [3.] Aquatic Toxicity [4.] Chemical/Microbiological [5.] Mold [n/a] Accreditation not applicable

Third Party & Federal Accreditations

A2LA – ISO 17025	1461.01
Canada	1461.01
EPA–Crypto	TN00003
AIHA	100789
DOD	1461.01
USDA	S-67674

Our Locations

ESC Lab Sciences has sixty-four client support centers that provide sample pickup and/or the delivery of sampling supplies. If you would like assistance from one of our support offices, please contact our main office. **ESC Lab Sciences performs all testing at our central laboratory.**

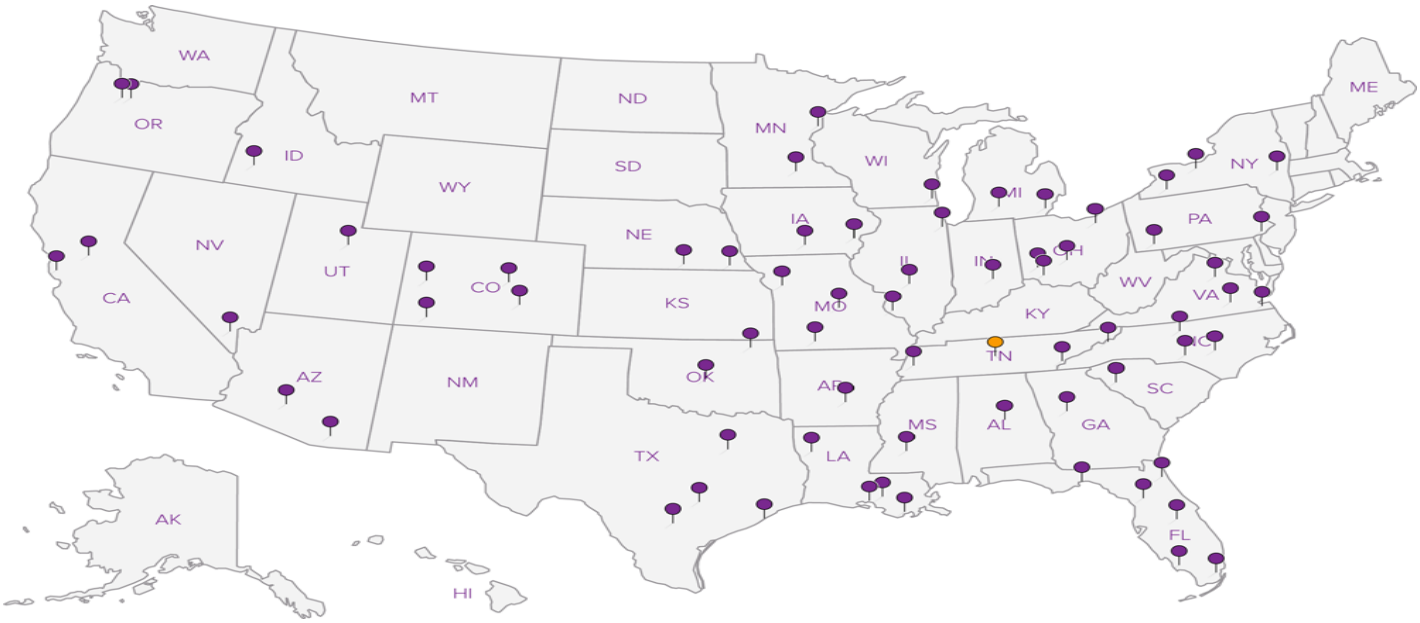

Chain of Custody Page 1 of 2

ESC L·A·B S·C·I·E·N·C·E·S

YOUR LAB OF CHOICE

12065 Lebanon Rd
Mount Juliet, TN 37122
Phone: 615-758-5858
Phone: 800-767-5859
Fax: 615-758-5859

L# 774269

H189

Acctnum: GALLET
Template: T103602
Prelogin: P515069
TSR: 350 - Jimmy Hunt
PB: 6-24-18
Shipped Via: FedEX Ground

Terracon Consultants - B-Ham AL.
110 12th Street North
Birmingham, AL 35203

Billing Information:
Trey Noland
110 12th Street North
Birmingham, AL 35203

Report to: Trey Noland
Email To: wgnoland@terracon.com

Project Description: Groundwater Monitoring
City/State Collected: Moundville, AL

Phone: 205-942-1289
Fax:
Client Project # 1157122
Lab Project # GALLET-1157122

Collected by (print): Brian Brown
Site/Facility ID # Veros Energy
P.O. # E1157122

Collected by (signature): [signature]
Immediately Packed on Ice N ____ Y ✓

Rush? (Lab MUST Be Notified)
____ Same Day 200%
____ Next Day 100%
____ Two Day 50%
____ Three Day 25%

Date Results Needed
Email? ___No X__Yes
FAX? ___No ___Yes

Analysis / Container / Preservative

Sample ID	Comp/Grab	Matrix *	Depth	Date	Time	No. of Cntrs	8270 100ml Amb NoPres S1M	Dissolved Metals 500mlHDPE-NoPres	V8260 40mlAmb-HCl	V8260 40mlAmb-HCl-Blk	Rem./Contaminant	Sample # (lab only)
~~Trip Blank - GW~~	~~Grab~~	~~GW~~				~~1~~				~~X~~		
~~MW-1~~	Grab	GW	—	6/29/15		5	X	X	X			
MW-3		GW	—		1505	5	X	X	X			-01
MW-4		GW	—		1515	5	X	X	X			-02
MW-5D		GW	—		1355	5	X	X	X			-03
~~MW-6~~		~~GW~~	—			~~5~~	~~X~~	~~X~~	~~X~~			
MW-8		GW	—		1417	5	X	X	X			-04
MW-9		GW	—		1423	5	X	X	X			-05
MW-11		GW	—		1441	5	X	X	X			-06
MW-12		GW	—		1450	5	X	X	X			-07

* Matrix: SS - Soil GW - Groundwater WW - WasteWater DW - Drinking Water OT - Other_____

Remarks: Dissolved Metals = As, Ba, Cd, Cr, Pb, Hg, Se, Ag

pH _____ Temp _____
Flow _____ Other _____

6361 0192 5440

Hold #

Relinquished by : (Signature)	Date:	Time:	Received by: (Signature)
[signature]	6/29/15	17:30	
Relinquished by : (Signature)	Date:	Time:	Received by: (Signature)
Relinquished by : (Signature)	Date:	Time:	Received for lab by: (Signature)
			[signature]

Samples returned via: ☑ FedEx ☐ UPS ☐ Courier ☐ _____

Temp: 3.8 °C Bottles Received: 45

Date: 7/1/15 Time: 0900

Condition: ✓ (lab use only)

COC Seal Intact: ✓ Y ____N ____NA

pH Checked: NCF: ✓

Chain of Custody Page 2 of 2

ESC LAB SCIENCES
YOUR LAB OF CHOICE
12065 Lebanon Rd
Mount Juliet, TN 37122
Phone: 615-758-5858
Phone: 800-767-5859
Fax: 615-758-5859

Terracon Consultants - B-Ham AL.
110 12th Street North
Birmingham, AL 35203

Billing Information:
Trey Noland
110 12th Street North
Birmingham, AL 35203

Report to: Trey Noland
Email To: wgnoland@terracon.com

Project Description: Groundwater Monitoring
City/State Collected: Moundville, AL

Phone: 205-942-1289
Fax:
Client Project # 1157122
Lab Project # GALLET-1157122

Collected by (print): Brian Brown
Site/Facility ID # Veros Energy
P.O. # E1157122

Collected by (signature): BB
Immediately Packed on Ice N ___ Y ✓
Rush? (Lab MUST Be Notified)
___ Same Day 200%
___ Next Day 100%
___ Two Day 50%
___ Three Day 25%
Date Results Needed
Email? ___No X__Yes
FAX? ___No ___Yes

L# 774269
Table #
Acctnum: GALLET
Template: T103602
Prelogin: P515069
TSR: 350 - Jimmy Hunt
PB: 6-24-15
Shipped Via: FedEX Ground

Analysis / Container / Preservative

Sample ID	Comp/Grab	Matrix *	Depth	Date	Time	No. of Cntrs	8270 100ml Amb NoPres SIM	Dissolved Metals 500mlHDPE-NoPres	V8260 40mlAmb-HCl	V8260 40mlAmb-HCl-Blk	Rem./Contaminant	Sample # (lab only)
~~MW-14~~		~~GW~~				~~5~~	~~X~~	~~X~~	~~X~~			
MW-15	Grab	GW	—	6/29/15	1535	5	X	X	X			-08
~~—~~		~~GW~~				~~5~~	~~X~~	~~X~~	~~X~~			

BB

* Matrix: SS - Soil GW - Groundwater WW - WasteWater DW - Drinking Water OT - Other_____

Remarks: Dissolved Metals = As, Ba, Cd, Cr, Pb, Hg, Se, Ag

pH _____ Temp _____
Flow _____ Other _____

6361 0192 5440

Hold #

Relinquished by : (Signature)	Date:	Time:	Received by: (Signature)
BB	6/29/15	17:30	
Relinquished by : (Signature)	Date:	Time:	Received by: (Signature)
Relinquished by : (Signature)	Date:	Time:	Received for lab by: (Signature)
			Calvin Bunty

Samples returned via: ☐ UPS ☐ FedEx ☐ Courier ☐ _____
Temp: 3.8 °C Bottles Received: 45
Date: 7/1/15 Time: 0900

Condition: 5 (lab use only)
COC Seal Intact: ✓ Y ___N ___NA
pH Checked: NCF: —

ESC Lab Sciences
Non-Conformance Form

Login #: 774269	Client: GALLET	Date: 07/01/15	Evaluated by: C. Busby

Non-Conformance (check applicable items)

	Sample Integrity		Chain of Custody Clarification		
	Parameter(s) past holding time	x	Login Clarification Needed		**If Broken Container:**
	Improper temperature		Chain of custody is incomplete		Insufficient packing material around container
	Improper container type		Please specify Metals requested.		Insufficient packing material inside cooler
	Improper preservation		Please specify TCLP requested.		Improper handling by carrier (FedEx / UPS / Courie
	Insufficient sample volume.	x	Received additional samples not listed on coc.		Sample was frozen
	Sample is biphasic.		Sample ids on containers do not match ids on coc		Container lid not intact
	Vials received with headspace.		Trip Blank not received.		**If no Chain of Custody:**
	Broken container		Client did not "X" analysis.		Received by:
	Broken container:		Chain of Custody is missing		Date/Time:
	Sufficient sample remains				Temp./Cont. Rec./pH:
					Carrier:
					Tracking#

Login Comments:

Received sample id: Duplicate not on c.o.c

Client informed by:		Call		Email	x	Voice Mail		Date: 7/1/15	Time:
TSR Initials: jeh	Client Contact: Brian Brown								

Login Instructions: Add Duplicate to the COC and analyze for all parameters.

This E-mail and any attached files are confidential, and may be copyright protected. If you are not the addressee, any dissemination of this communication is strictly prohibited. If you have received this message in error, please contact the sender immediately and delete/destroy all information received.

L774269

Jimmy Hunt

From: Noland III, Trey G <Trey.Noland@terracon.com>
Sent: Tuesday, June 30, 2015 10:42 AM
To: Jimmy Hunt
Cc: Brown, Brian B
Subject: RE: GALLET-1157122

Jimmy,

As we discussed last week, please also make sure to report Dicyclopentadiene on these samples. I think it was accidentally left off the chain. Thanks.

Trey G. Noland, P.G.
Terracon
(205) 942-1289

From: Brown, Brian B
Sent: Tuesday, June 30, 2015 7:21 AM
To: jhunt@esclabsciences.com; Noland III, Trey G
Subject: GALLET-1157122

Jimmy,

These GW samples should arrive this morning. Two things, I did not indicate a duplicate on the chain. We will need the duplicate tested. Also, this is a rush turnaround, 1 day, or 2 day if 1 day is not feasible.

Thanks,

Brian Brown
Terracon Consultants, Inc.
(205) 907-1505

Sent from my iPhone

Terracon provides environmental, facilities, geotechnical, and materials consulting engineering services delivered with responsiveness, resourcefulness, and reliability.

Private and confidential as detailed here (www.terracon.com/disclaimer). If you cannot access hyperlink, please e-mail sender.

ANALYTICAL REPORT

February 26, 2016

Terracon Consultants - B-Ham AL.

Sample Delivery Group:	L818788
Samples Received:	02/19/2016
Project Number:	
Description:	Site Investigation
Site:	Veros Energy
Report To:	Trey Noland 110 12th Street North Birmingham, AL 35203

Entire Report Reviewed By:

Jimmy Hunt
Technical Service Representative

Results relate only to the items tested or calibrated and are reported as rounded values. This test report shall not be reproduced, except in full, without written approval of the laboratory. Where applicable, sampling conducted by ESC is performed per guidance provided in laboratory standard operating procedures: 060302, 060303, and 060304.

TABLE OF CONTENTS

[1]Cp: Cover Page 1

[2]Tc: Table of Contents 2

[3]Ss: Sample Summary 3

[4]Cn: Case Narrative 5

[5]Sr: Sample Results 6

MW-3 L818788-01 6

MW-4 L818788-02 8

MW-5D L818788-03 10

MW-9 L818788-04 12

MW-11 L818788-05 14

MW-12 L818788-06 16

MW-15 L818788-07 18

DUPLICATE L818788-08 20

DRUM L818788-09 22

[6]Qc: Quality Control Summary 24

Volatile Organic Compounds (GC/MS) by Method 8260B 24

[7]Gl: Glossary of Terms 34

[8]Al: Accreditations & Locations 35

[9]Sc: Chain of Custody 36

MW-3 L818788-01 GW

Collected by: Samuels-Naccari | Collected date/time: 02/18/16 15:30 | Received date/time: 02/19/16 09:00

Method	Batch	Dilution	Preparation date/time	Analysis date/time	Analyst
Volatile Organic Compounds (GC/MS) by Method 8260B	WG850912	1	02/25/16 07:58	02/25/16 07:58	ACG

MW-4 L818788-02 GW

Collected by: Samuels-Naccari | Collected date/time: 02/18/16 15:45 | Received date/time: 02/19/16 09:00

Method	Batch	Dilution	Preparation date/time	Analysis date/time	Analyst
Volatile Organic Compounds (GC/MS) by Method 8260B	WG852162	1	02/26/16 00:14	02/26/16 00:14	ACG

MW-5D L818788-03 GW

Collected by: Samuels-Naccari | Collected date/time: 02/18/16 15:10 | Received date/time: 02/19/16 09:00

Method	Batch	Dilution	Preparation date/time	Analysis date/time	Analyst
Volatile Organic Compounds (GC/MS) by Method 8260B	WG850912	1	02/25/16 11:34	02/25/16 11:34	ACG

MW-9 L818788-04 GW

Collected by: Samuels-Naccari | Collected date/time: 02/18/16 12:30 | Received date/time: 02/19/16 09:00

Method	Batch	Dilution	Preparation date/time	Analysis date/time	Analyst
Volatile Organic Compounds (GC/MS) by Method 8260B	WG850912	1	02/25/16 11:54	02/25/16 11:54	ACG

MW-11 L818788-05 GW

Collected by: Samuels-Naccari | Collected date/time: 02/18/16 12:50 | Received date/time: 02/19/16 09:00

Method	Batch	Dilution	Preparation date/time	Analysis date/time	Analyst
Volatile Organic Compounds (GC/MS) by Method 8260B	WG850912	1	02/25/16 13:11	02/25/16 13:11	ACG

MW-12 L818788-06 GW

Collected by: Samuels-Naccari | Collected date/time: 02/18/16 10:24 | Received date/time: 02/19/16 09:00

Method	Batch	Dilution	Preparation date/time	Analysis date/time	Analyst
Volatile Organic Compounds (GC/MS) by Method 8260B	WG850912	1	02/25/16 13:30	02/25/16 13:30	ACG
Volatile Organic Compounds (GC/MS) by Method 8260B	WG852162	20	02/26/16 00:34	02/26/16 00:34	ACG

MW-15 L818788-07 GW

Collected by: Samuels-Naccari | Collected date/time: 02/18/16 10:00 | Received date/time: 02/19/16 09:00

Method	Batch	Dilution	Preparation date/time	Analysis date/time	Analyst
Volatile Organic Compounds (GC/MS) by Method 8260B	WG850912	1	02/25/16 13:49	02/25/16 13:49	ACG
Volatile Organic Compounds (GC/MS) by Method 8260B	WG852162	1	02/26/16 00:53	02/26/16 00:53	ACG

DUPLICATE L818788-08 GW

Collected by: Samuels-Naccari | Collected date/time: 02/18/16 15:00 | Received date/time: 02/19/16 09:00

Method	Batch	Dilution	Preparation date/time	Analysis date/time	Analyst
Volatile Organic Compounds (GC/MS) by Method 8260B	WG852162	1	02/26/16 01:14	02/26/16 01:14	ACG

DRUM L818788-09 GW

Collected by	Collected date/time	Received date/time
Samuels-Naccari	02/18/16 15:05	02/19/16 09:00

Method	Batch	Dilution	Preparation date/time	Analysis date/time	Analyst
Volatile Organic Compounds (GC/MS) by Method 8260B	WG852162	1	02/26/16 01:34	02/26/16 01:34	ACG

1 Cp
2 Tc
3 Ss
4 Cn
5 Sr
6 Qc
7 Gl
8 Al
9 Sc

All sample aliquots were received at the correct temperature, in the proper containers, with the appropriate preservatives, and within method specified holding times. All MDL (LOD) and RDL (LOQ) values reported for environmental samples have been corrected for the dilution factor used in the analysis. All Method and Batch Quality Control are within established criteria except where addressed in this case narrative, a non-conformance form or properly qualified within the sample results. By my digital signature below, I affirm to the best of my knowledge, all problems/anomalies observed by the laboratory as having the potential to affect the quality of the data have been identified by the laboratory, and no information or data have been knowingly withheld that would affect the quality of the data.

Jimmy Hunt
Technical Service Representative

Volatile Organic Compounds (GC/MS) by Method 8260B

Analyte	Result mg/l	Qualifier	RDL mg/l	Dilution	Analysis date / time	Batch
Acetone	ND		0.0500	1	02/25/2016 07:58	WG850912
Acrolein	ND		0.0500	1	02/25/2016 07:58	WG850912
Acrylonitrile	ND		0.0100	1	02/25/2016 07:58	WG850912
Benzene	ND		0.00100	1	02/25/2016 07:58	WG850912
Bromobenzene	ND		0.00100	1	02/25/2016 07:58	WG850912
Bromodichloromethane	ND		0.00100	1	02/25/2016 07:58	WG850912
Bromoform	ND		0.00100	1	02/25/2016 07:58	WG850912
Bromomethane	ND		0.00500	1	02/25/2016 07:58	WG850912
n-Butylbenzene	ND		0.00100	1	02/25/2016 07:58	WG850912
sec-Butylbenzene	ND		0.00100	1	02/25/2016 07:58	WG850912
tert-Butylbenzene	ND		0.00100	1	02/25/2016 07:58	WG850912
Carbon tetrachloride	ND		0.00100	1	02/25/2016 07:58	WG850912
Chlorobenzene	ND		0.00100	1	02/25/2016 07:58	WG850912
Chlorodibromomethane	ND		0.00100	1	02/25/2016 07:58	WG850912
Chloroethane	ND		0.00500	1	02/25/2016 07:58	WG850912
2-Chloroethyl vinyl ether	ND	J6	0.0500	1	02/25/2016 07:58	WG850912
Chloroform	ND		0.00500	1	02/25/2016 07:58	WG850912
Chloromethane	ND		0.00250	1	02/25/2016 07:58	WG850912
2-Chlorotoluene	ND		0.00100	1	02/25/2016 07:58	WG850912
4-Chlorotoluene	ND		0.00100	1	02/25/2016 07:58	WG850912
1,2-Dibromo-3-Chloropropane	ND		0.00500	1	02/25/2016 07:58	WG850912
1,2-Dibromoethane	ND		0.00100	1	02/25/2016 07:58	WG850912
Dicyclopentadiene	0.00351		0.00100	1	02/25/2016 07:58	WG850912
Dibromomethane	ND		0.00100	1	02/25/2016 07:58	WG850912
1,2-Dichlorobenzene	ND		0.00100	1	02/25/2016 07:58	WG850912
1,3-Dichlorobenzene	ND		0.00100	1	02/25/2016 07:58	WG850912
1,4-Dichlorobenzene	ND		0.00100	1	02/25/2016 07:58	WG850912
Dichlorodifluoromethane	ND		0.00500	1	02/25/2016 07:58	WG850912
1,1-Dichloroethane	ND		0.00100	1	02/25/2016 07:58	WG850912
1,2-Dichloroethane	ND		0.00100	1	02/25/2016 07:58	WG850912
1,1-Dichloroethene	ND		0.00100	1	02/25/2016 07:58	WG850912
cis-1,2-Dichloroethene	ND		0.00100	1	02/25/2016 07:58	WG850912
trans-1,2-Dichloroethene	ND		0.00100	1	02/25/2016 07:58	WG850912
1,2-Dichloropropane	ND		0.00100	1	02/25/2016 07:58	WG850912
1,1-Dichloropropene	ND		0.00100	1	02/25/2016 07:58	WG850912
1,3-Dichloropropane	ND		0.00100	1	02/25/2016 07:58	WG850912
cis-1,3-Dichloropropene	ND		0.00100	1	02/25/2016 07:58	WG850912
trans-1,3-Dichloropropene	ND		0.00100	1	02/25/2016 07:58	WG850912
2,2-Dichloropropane	ND		0.00100	1	02/25/2016 07:58	WG850912
Di-isopropyl ether	ND		0.00100	1	02/25/2016 07:58	WG850912
Ethylbenzene	ND		0.00100	1	02/25/2016 07:58	WG850912
Hexachloro-1,3-butadiene	ND		0.00100	1	02/25/2016 07:58	WG850912
Isopropylbenzene	ND		0.00100	1	02/25/2016 07:58	WG850912
p-Isopropyltoluene	ND		0.00100	1	02/25/2016 07:58	WG850912
2-Butanone (MEK)	ND		0.0100	1	02/25/2016 07:58	WG850912
Methylene Chloride	ND		0.00500	1	02/25/2016 07:58	WG850912
4-Methyl-2-pentanone (MIBK)	ND		0.0100	1	02/25/2016 07:58	WG850912
Methyl tert-butyl ether	ND		0.00100	1	02/25/2016 07:58	WG850912
Naphthalene	ND		0.00500	1	02/25/2016 07:58	WG850912
n-Propylbenzene	ND		0.00100	1	02/25/2016 07:58	WG850912
Styrene	ND		0.00100	1	02/25/2016 07:58	WG850912
1,1,1,2-Tetrachloroethane	ND		0.00100	1	02/25/2016 07:58	WG850912
1,1,2,2-Tetrachloroethane	ND		0.00100	1	02/25/2016 07:58	WG850912
1,1,2-Trichlorotrifluoroethane	ND		0.00100	1	02/25/2016 07:58	WG850912
Tetrachloroethene	ND		0.00100	1	02/25/2016 07:58	WG850912
Toluene	ND		0.00500	1	02/25/2016 07:58	WG850912

Volatile Organic Compounds (GC/MS) by Method 8260B

Analyte	Result mg/l	Qualifier	RDL mg/l	Dilution	Analysis date / time	Batch
1,2,3-Trichlorobenzene	ND		0.00100	1	02/25/2016 07:58	WG850912
1,2,4-Trichlorobenzene	ND		0.00100	1	02/25/2016 07:58	WG850912
1,1,1-Trichloroethane	ND		0.00100	1	02/25/2016 07:58	WG850912
1,1,2-Trichloroethane	ND		0.00100	1	02/25/2016 07:58	WG850912
Trichloroethene	ND		0.00100	1	02/25/2016 07:58	WG850912
Trichlorofluoromethane	ND		0.00500	1	02/25/2016 07:58	WG850912
1,2,3-Trichloropropane	ND		0.00250	1	02/25/2016 07:58	WG850912
1,2,4-Trimethylbenzene	ND		0.00100	1	02/25/2016 07:58	WG850912
1,2,3-Trimethylbenzene	ND		0.00100	1	02/25/2016 07:58	WG850912
1,3,5-Trimethylbenzene	ND		0.00100	1	02/25/2016 07:58	WG850912
Vinyl chloride	ND		0.00100	1	02/25/2016 07:58	WG850912
Xylenes, Total	ND		0.00300	1	02/25/2016 07:58	WG850912
(S) Toluene-d8	*105*		*90.0-115*		*02/25/2016 07:58*	WG850912
(S) Dibromofluoromethane	*111*		*79.0-121*		*02/25/2016 07:58*	WG850912
(S) 4-Bromofluorobenzene	*98.0*		*80.1-120*		*02/25/2016 07:58*	WG850912

Volatile Organic Compounds (GC/MS) by Method 8260B

Analyte	Result mg/l	Qualifier	RDL mg/l	Dilution	Analysis date / time	Batch
Acetone	ND		0.0500	1	02/26/2016 00:14	WG852162
Acrolein	ND	J4	0.0500	1	02/26/2016 00:14	WG852162
Acrylonitrile	ND		0.0100	1	02/26/2016 00:14	WG852162
Benzene	0.00149		0.00100	1	02/26/2016 00:14	WG852162
Bromobenzene	ND		0.00100	1	02/26/2016 00:14	WG852162
Bromodichloromethane	ND		0.00100	1	02/26/2016 00:14	WG852162
Bromoform	ND		0.00100	1	02/26/2016 00:14	WG852162
Bromomethane	ND		0.00500	1	02/26/2016 00:14	WG852162
n-Butylbenzene	ND		0.00100	1	02/26/2016 00:14	WG852162
sec-Butylbenzene	ND		0.00100	1	02/26/2016 00:14	WG852162
tert-Butylbenzene	ND		0.00100	1	02/26/2016 00:14	WG852162
Carbon tetrachloride	ND		0.00100	1	02/26/2016 00:14	WG852162
Chlorobenzene	ND		0.00100	1	02/26/2016 00:14	WG852162
Chlorodibromomethane	ND		0.00100	1	02/26/2016 00:14	WG852162
Chloroethane	ND		0.00500	1	02/26/2016 00:14	WG852162
2-Chloroethyl vinyl ether	ND		0.0500	1	02/26/2016 00:14	WG852162
Chloroform	ND		0.00500	1	02/26/2016 00:14	WG852162
Chloromethane	ND		0.00250	1	02/26/2016 00:14	WG852162
2-Chlorotoluene	ND		0.00100	1	02/26/2016 00:14	WG852162
4-Chlorotoluene	ND		0.00100	1	02/26/2016 00:14	WG852162
1,2-Dibromo-3-Chloropropane	ND		0.00500	1	02/26/2016 00:14	WG852162
1,2-Dibromoethane	ND		0.00100	1	02/26/2016 00:14	WG852162
Dicyclopentadiene	0.0179		0.00100	1	02/26/2016 00:14	WG852162
Dibromomethane	ND		0.00100	1	02/26/2016 00:14	WG852162
1,2-Dichlorobenzene	ND		0.00100	1	02/26/2016 00:14	WG852162
1,3-Dichlorobenzene	ND		0.00100	1	02/26/2016 00:14	WG852162
1,4-Dichlorobenzene	ND		0.00100	1	02/26/2016 00:14	WG852162
Dichlorodifluoromethane	ND		0.00500	1	02/26/2016 00:14	WG852162
1,1-Dichloroethane	ND		0.00100	1	02/26/2016 00:14	WG852162
1,2-Dichloroethane	ND		0.00100	1	02/26/2016 00:14	WG852162
1,1-Dichloroethene	ND		0.00100	1	02/26/2016 00:14	WG852162
cis-1,2-Dichloroethene	ND		0.00100	1	02/26/2016 00:14	WG852162
trans-1,2-Dichloroethene	ND		0.00100	1	02/26/2016 00:14	WG852162
1,2-Dichloropropane	ND		0.00100	1	02/26/2016 00:14	WG852162
1,1-Dichloropropene	ND		0.00100	1	02/26/2016 00:14	WG852162
1,3-Dichloropropane	ND		0.00100	1	02/26/2016 00:14	WG852162
cis-1,3-Dichloropropene	ND		0.00100	1	02/26/2016 00:14	WG852162
trans-1,3-Dichloropropene	ND		0.00100	1	02/26/2016 00:14	WG852162
2,2-Dichloropropane	ND		0.00100	1	02/26/2016 00:14	WG852162
Di-isopropyl ether	ND		0.00100	1	02/26/2016 00:14	WG852162
Ethylbenzene	0.00104		0.00100	1	02/26/2016 00:14	WG852162
Hexachloro-1,3-butadiene	ND		0.00100	1	02/26/2016 00:14	WG852162
Isopropylbenzene	ND		0.00100	1	02/26/2016 00:14	WG852162
p-Isopropyltoluene	ND		0.00100	1	02/26/2016 00:14	WG852162
2-Butanone (MEK)	ND		0.0100	1	02/26/2016 00:14	WG852162
Methylene Chloride	ND		0.00500	1	02/26/2016 00:14	WG852162
4-Methyl-2-pentanone (MIBK)	ND		0.0100	1	02/26/2016 00:14	WG852162
Methyl tert-butyl ether	ND		0.00100	1	02/26/2016 00:14	WG852162
Naphthalene	0.0182		0.00500	1	02/26/2016 00:14	WG852162
n-Propylbenzene	ND		0.00100	1	02/26/2016 00:14	WG852162
Styrene	ND		0.00100	1	02/26/2016 00:14	WG852162
1,1,1,2-Tetrachloroethane	ND		0.00100	1	02/26/2016 00:14	WG852162
1,1,2,2-Tetrachloroethane	ND		0.00100	1	02/26/2016 00:14	WG852162
1,1,2-Trichlorotrifluoroethane	ND		0.00100	1	02/26/2016 00:14	WG852162
Tetrachloroethene	ND		0.00100	1	02/26/2016 00:14	WG852162
Toluene	ND		0.00500	1	02/26/2016 00:14	WG852162

Volatile Organic Compounds (GC/MS) by Method 8260B

Analyte	Result mg/l	Qualifier	RDL mg/l	Dilution	Analysis date / time	Batch
1,2,3-Trichlorobenzene	ND		0.00100	1	02/26/2016 00:14	WG852162
1,2,4-Trichlorobenzene	ND		0.00100	1	02/26/2016 00:14	WG852162
1,1,1-Trichloroethane	ND		0.00100	1	02/26/2016 00:14	WG852162
1,1,2-Trichloroethane	ND		0.00100	1	02/26/2016 00:14	WG852162
Trichloroethene	ND		0.00100	1	02/26/2016 00:14	WG852162
Trichlorofluoromethane	ND		0.00500	1	02/26/2016 00:14	WG852162
1,2,3-Trichloropropane	ND		0.00250	1	02/26/2016 00:14	WG852162
1,2,4-Trimethylbenzene	ND		0.00100	1	02/26/2016 00:14	WG852162
1,2,3-Trimethylbenzene	0.00417		0.00100	1	02/26/2016 00:14	WG852162
1,3,5-Trimethylbenzene	ND		0.00100	1	02/26/2016 00:14	WG852162
Vinyl chloride	ND		0.00100	1	02/26/2016 00:14	WG852162
Xylenes, Total	0.00507		0.00300	1	02/26/2016 00:14	WG852162
(S) Toluene-d8	*104*		*90.0-115*		*02/26/2016 00:14*	WG852162
(S) Dibromofluoromethane	*108*		*79.0-121*		*02/26/2016 00:14*	WG852162
(S) 4-Bromofluorobenzene	*101*		*80.1-120*		*02/26/2016 00:14*	WG852162

Volatile Organic Compounds (GC/MS) by Method 8260B

Analyte	Result mg/l	Qualifier	RDL mg/l	Dilution	Analysis date / time	Batch
Acetone	ND		0.0500	1	02/25/2016 11:34	WG850912
Acrolein	ND		0.0500	1	02/25/2016 11:34	WG850912
Acrylonitrile	ND		0.0100	1	02/25/2016 11:34	WG850912
Benzene	0.00137		0.00100	1	02/25/2016 11:34	WG850912
Bromobenzene	ND		0.00100	1	02/25/2016 11:34	WG850912
Bromodichloromethane	ND		0.00100	1	02/25/2016 11:34	WG850912
Bromoform	ND		0.00100	1	02/25/2016 11:34	WG850912
Bromomethane	ND		0.00500	1	02/25/2016 11:34	WG850912
n-Butylbenzene	ND		0.00100	1	02/25/2016 11:34	WG850912
sec-Butylbenzene	ND		0.00100	1	02/25/2016 11:34	WG850912
tert-Butylbenzene	ND		0.00100	1	02/25/2016 11:34	WG850912
Carbon tetrachloride	ND		0.00100	1	02/25/2016 11:34	WG850912
Chlorobenzene	ND		0.00100	1	02/25/2016 11:34	WG850912
Chlorodibromomethane	ND		0.00100	1	02/25/2016 11:34	WG850912
Chloroethane	ND		0.00500	1	02/25/2016 11:34	WG850912
2-Chloroethyl vinyl ether	ND	J3	0.0500	1	02/25/2016 11:34	WG850912
Chloroform	ND		0.00500	1	02/25/2016 11:34	WG850912
Chloromethane	ND		0.00250	1	02/25/2016 11:34	WG850912
2-Chlorotoluene	ND		0.00100	1	02/25/2016 11:34	WG850912
4-Chlorotoluene	ND		0.00100	1	02/25/2016 11:34	WG850912
1,2-Dibromo-3-Chloropropane	ND		0.00500	1	02/25/2016 11:34	WG850912
1,2-Dibromoethane	ND		0.00100	1	02/25/2016 11:34	WG850912
Dicyclopentadiene	0.00150		0.00100	1	02/25/2016 11:34	WG850912
Dibromomethane	ND		0.00100	1	02/25/2016 11:34	WG850912
1,2-Dichlorobenzene	ND		0.00100	1	02/25/2016 11:34	WG850912
1,3-Dichlorobenzene	ND		0.00100	1	02/25/2016 11:34	WG850912
1,4-Dichlorobenzene	ND		0.00100	1	02/25/2016 11:34	WG850912
Dichlorodifluoromethane	ND		0.00500	1	02/25/2016 11:34	WG850912
1,1-Dichloroethane	ND		0.00100	1	02/25/2016 11:34	WG850912
1,2-Dichloroethane	ND		0.00100	1	02/25/2016 11:34	WG850912
1,1-Dichloroethene	ND		0.00100	1	02/25/2016 11:34	WG850912
cis-1,2-Dichloroethene	ND		0.00100	1	02/25/2016 11:34	WG850912
trans-1,2-Dichloroethene	ND		0.00100	1	02/25/2016 11:34	WG850912
1,2-Dichloropropane	ND		0.00100	1	02/25/2016 11:34	WG850912
1,1-Dichloropropene	ND		0.00100	1	02/25/2016 11:34	WG850912
1,3-Dichloropropane	ND		0.00100	1	02/25/2016 11:34	WG850912
cis-1,3-Dichloropropene	ND		0.00100	1	02/25/2016 11:34	WG850912
trans-1,3-Dichloropropene	ND		0.00100	1	02/25/2016 11:34	WG850912
2,2-Dichloropropane	ND		0.00100	1	02/25/2016 11:34	WG850912
Di-isopropyl ether	ND		0.00100	1	02/25/2016 11:34	WG850912
Ethylbenzene	0.00660		0.00100	1	02/25/2016 11:34	WG850912
Hexachloro-1,3-butadiene	ND		0.00100	1	02/25/2016 11:34	WG850912
Isopropylbenzene	ND		0.00100	1	02/25/2016 11:34	WG850912
p-Isopropyltoluene	ND		0.00100	1	02/25/2016 11:34	WG850912
2-Butanone (MEK)	ND		0.0100	1	02/25/2016 11:34	WG850912
Methylene Chloride	ND		0.00500	1	02/25/2016 11:34	WG850912
4-Methyl-2-pentanone (MIBK)	ND		0.0100	1	02/25/2016 11:34	WG850912
Methyl tert-butyl ether	ND		0.00100	1	02/25/2016 11:34	WG850912
Naphthalene	0.0226		0.00500	1	02/25/2016 11:34	WG850912
n-Propylbenzene	0.00196		0.00100	1	02/25/2016 11:34	WG850912
Styrene	ND		0.00100	1	02/25/2016 11:34	WG850912
1,1,1,2-Tetrachloroethane	ND		0.00100	1	02/25/2016 11:34	WG850912
1,1,2,2-Tetrachloroethane	ND		0.00100	1	02/25/2016 11:34	WG850912
1,1,2-Trichlorotrifluoroethane	ND		0.00100	1	02/25/2016 11:34	WG850912
Tetrachloroethene	ND		0.00100	1	02/25/2016 11:34	WG850912
Toluene	ND		0.00500	1	02/25/2016 11:34	WG850912

Volatile Organic Compounds (GC/MS) by Method 8260B

Analyte	Result mg/l	Qualifier	RDL mg/l	Dilution	Analysis date / time	Batch
1,2,3-Trichlorobenzene	ND		0.00100	1	02/25/2016 11:34	WG850912
1,2,4-Trichlorobenzene	ND		0.00100	1	02/25/2016 11:34	WG850912
1,1,1-Trichloroethane	ND		0.00100	1	02/25/2016 11:34	WG850912
1,1,2-Trichloroethane	ND		0.00100	1	02/25/2016 11:34	WG850912
Trichloroethene	ND		0.00100	1	02/25/2016 11:34	WG850912
Trichlorofluoromethane	ND		0.00500	1	02/25/2016 11:34	WG850912
1,2,3-Trichloropropane	ND		0.00250	1	02/25/2016 11:34	WG850912
1,2,4-Trimethylbenzene	0.00710		0.00100	1	02/25/2016 11:34	WG850912
1,2,3-Trimethylbenzene	0.00419		0.00100	1	02/25/2016 11:34	WG850912
1,3,5-Trimethylbenzene	0.00155		0.00100	1	02/25/2016 11:34	WG850912
Vinyl chloride	ND		0.00100	1	02/25/2016 11:34	WG850912
Xylenes, Total	0.00867		0.00300	1	02/25/2016 11:34	WG850912
(S) Toluene-d8	*103*		*90.0-115*		*02/25/2016 11:34*	WG850912
(S) Dibromofluoromethane	*110*		*79.0-121*		*02/25/2016 11:34*	WG850912
(S) 4-Bromofluorobenzene	*98.8*		*80.1-120*		*02/25/2016 11:34*	WG850912

Volatile Organic Compounds (GC/MS) by Method 8260B

Analyte	Result mg/l	Qualifier	RDL mg/l	Dilution	Analysis date / time	Batch
Acetone	ND		0.0500	1	02/25/2016 11:54	WG850912
Acrolein	ND		0.0500	1	02/25/2016 11:54	WG850912
Acrylonitrile	ND		0.0100	1	02/25/2016 11:54	WG850912
Benzene	0.00503		0.00100	1	02/25/2016 11:54	WG850912
Bromobenzene	ND		0.00100	1	02/25/2016 11:54	WG850912
Bromodichloromethane	ND		0.00100	1	02/25/2016 11:54	WG850912
Bromoform	ND		0.00100	1	02/25/2016 11:54	WG850912
Bromomethane	ND		0.00500	1	02/25/2016 11:54	WG850912
n-Butylbenzene	ND		0.00100	1	02/25/2016 11:54	WG850912
sec-Butylbenzene	ND		0.00100	1	02/25/2016 11:54	WG850912
tert-Butylbenzene	ND		0.00100	1	02/25/2016 11:54	WG850912
Carbon tetrachloride	ND		0.00100	1	02/25/2016 11:54	WG850912
Chlorobenzene	ND		0.00100	1	02/25/2016 11:54	WG850912
Chlorodibromomethane	ND		0.00100	1	02/25/2016 11:54	WG850912
Chloroethane	ND		0.00500	1	02/25/2016 11:54	WG850912
2-Chloroethyl vinyl ether	ND	J3	0.0500	1	02/25/2016 11:54	WG850912
Chloroform	ND		0.00500	1	02/25/2016 11:54	WG850912
Chloromethane	ND		0.00250	1	02/25/2016 11:54	WG850912
2-Chlorotoluene	ND		0.00100	1	02/25/2016 11:54	WG850912
4-Chlorotoluene	ND		0.00100	1	02/25/2016 11:54	WG850912
1,2-Dibromo-3-Chloropropane	ND		0.00500	1	02/25/2016 11:54	WG850912
1,2-Dibromoethane	ND		0.00100	1	02/25/2016 11:54	WG850912
Dicyclopentadiene	ND		0.00100	1	02/25/2016 11:54	WG850912
Dibromomethane	ND		0.00100	1	02/25/2016 11:54	WG850912
1,2-Dichlorobenzene	ND		0.00100	1	02/25/2016 11:54	WG850912
1,3-Dichlorobenzene	ND		0.00100	1	02/25/2016 11:54	WG850912
1,4-Dichlorobenzene	ND		0.00100	1	02/25/2016 11:54	WG850912
Dichlorodifluoromethane	ND		0.00500	1	02/25/2016 11:54	WG850912
1,1-Dichloroethane	ND		0.00100	1	02/25/2016 11:54	WG850912
1,2-Dichloroethane	ND		0.00100	1	02/25/2016 11:54	WG850912
1,1-Dichloroethene	ND		0.00100	1	02/25/2016 11:54	WG850912
cis-1,2-Dichloroethene	ND		0.00100	1	02/25/2016 11:54	WG850912
trans-1,2-Dichloroethene	ND		0.00100	1	02/25/2016 11:54	WG850912
1,2-Dichloropropane	ND		0.00100	1	02/25/2016 11:54	WG850912
1,1-Dichloropropene	ND		0.00100	1	02/25/2016 11:54	WG850912
1,3-Dichloropropane	ND		0.00100	1	02/25/2016 11:54	WG850912
cis-1,3-Dichloropropene	ND		0.00100	1	02/25/2016 11:54	WG850912
trans-1,3-Dichloropropene	ND		0.00100	1	02/25/2016 11:54	WG850912
2,2-Dichloropropane	ND		0.00100	1	02/25/2016 11:54	WG850912
Di-isopropyl ether	ND		0.00100	1	02/25/2016 11:54	WG850912
Ethylbenzene	ND		0.00100	1	02/25/2016 11:54	WG850912
Hexachloro-1,3-butadiene	ND		0.00100	1	02/25/2016 11:54	WG850912
Isopropylbenzene	ND		0.00100	1	02/25/2016 11:54	WG850912
p-Isopropyltoluene	ND		0.00100	1	02/25/2016 11:54	WG850912
2-Butanone (MEK)	ND		0.0100	1	02/25/2016 11:54	WG850912
Methylene Chloride	ND		0.00500	1	02/25/2016 11:54	WG850912
4-Methyl-2-pentanone (MIBK)	ND		0.0100	1	02/25/2016 11:54	WG850912
Methyl tert-butyl ether	ND		0.00100	1	02/25/2016 11:54	WG850912
Naphthalene	ND		0.00500	1	02/25/2016 11:54	WG850912
n-Propylbenzene	ND		0.00100	1	02/25/2016 11:54	WG850912
Styrene	ND		0.00100	1	02/25/2016 11:54	WG850912
1,1,1,2-Tetrachloroethane	ND		0.00100	1	02/25/2016 11:54	WG850912
1,1,2,2-Tetrachloroethane	ND		0.00100	1	02/25/2016 11:54	WG850912
1,1,2-Trichlorotrifluoroethane	ND		0.00100	1	02/25/2016 11:54	WG850912
Tetrachloroethene	ND		0.00100	1	02/25/2016 11:54	WG850912
Toluene	ND		0.00500	1	02/25/2016 11:54	WG850912

Volatile Organic Compounds (GC/MS) by Method 8260B

Analyte	Result mg/l	Qualifier	RDL mg/l	Dilution	Analysis date / time	Batch
1,2,3-Trichlorobenzene	ND		0.00100	1	02/25/2016 11:54	WG850912
1,2,4-Trichlorobenzene	ND		0.00100	1	02/25/2016 11:54	WG850912
1,1,1-Trichloroethane	ND		0.00100	1	02/25/2016 11:54	WG850912
1,1,2-Trichloroethane	ND		0.00100	1	02/25/2016 11:54	WG850912
Trichloroethene	ND		0.00100	1	02/25/2016 11:54	WG850912
Trichlorofluoromethane	ND		0.00500	1	02/25/2016 11:54	WG850912
1,2,3-Trichloropropane	ND		0.00250	1	02/25/2016 11:54	WG850912
1,2,4-Trimethylbenzene	ND		0.00100	1	02/25/2016 11:54	WG850912
1,2,3-Trimethylbenzene	ND		0.00100	1	02/25/2016 11:54	WG850912
1,3,5-Trimethylbenzene	ND		0.00100	1	02/25/2016 11:54	WG850912
Vinyl chloride	ND		0.00100	1	02/25/2016 11:54	WG850912
Xylenes, Total	ND		0.00300	1	02/25/2016 11:54	WG850912
(S) Toluene-d8	*104*		*90.0-115*		*02/25/2016 11:54*	WG850912
(S) Dibromofluoromethane	*112*		*79.0-121*		*02/25/2016 11:54*	WG850912
(S) 4-Bromofluorobenzene	*99.2*		*80.1-120*		*02/25/2016 11:54*	WG850912

Volatile Organic Compounds (GC/MS) by Method 8260B

Analyte	Result mg/l	Qualifier	RDL mg/l	Dilution	Analysis date / time	Batch
Acetone	ND		0.0500	1	02/25/2016 13:11	WG850912
Acrolein	ND		0.0500	1	02/25/2016 13:11	WG850912
Acrylonitrile	ND		0.0100	1	02/25/2016 13:11	WG850912
Benzene	0.00886		0.00100	1	02/25/2016 13:11	WG850912
Bromobenzene	ND		0.00100	1	02/25/2016 13:11	WG850912
Bromodichloromethane	ND		0.00100	1	02/25/2016 13:11	WG850912
Bromoform	ND		0.00100	1	02/25/2016 13:11	WG850912
Bromomethane	ND		0.00500	1	02/25/2016 13:11	WG850912
n-Butylbenzene	0.00951		0.00100	1	02/25/2016 13:11	WG850912
sec-Butylbenzene	0.00312		0.00100	1	02/25/2016 13:11	WG850912
tert-Butylbenzene	ND		0.00100	1	02/25/2016 13:11	WG850912
Carbon tetrachloride	ND		0.00100	1	02/25/2016 13:11	WG850912
Chlorobenzene	ND		0.00100	1	02/25/2016 13:11	WG850912
Chlorodibromomethane	ND		0.00100	1	02/25/2016 13:11	WG850912
Chloroethane	ND		0.00500	1	02/25/2016 13:11	WG850912
2-Chloroethyl vinyl ether	ND	J3	0.0500	1	02/25/2016 13:11	WG850912
Chloroform	ND		0.00500	1	02/25/2016 13:11	WG850912
Chloromethane	ND		0.00250	1	02/25/2016 13:11	WG850912
2-Chlorotoluene	ND		0.00100	1	02/25/2016 13:11	WG850912
4-Chlorotoluene	ND		0.00100	1	02/25/2016 13:11	WG850912
1,2-Dibromo-3-Chloropropane	ND		0.00500	1	02/25/2016 13:11	WG850912
1,2-Dibromoethane	ND		0.00100	1	02/25/2016 13:11	WG850912
Dicyclopentadiene	0.0346		0.00100	1	02/25/2016 13:11	WG850912
Dibromomethane	ND		0.00100	1	02/25/2016 13:11	WG850912
1,2-Dichlorobenzene	ND		0.00100	1	02/25/2016 13:11	WG850912
1,3-Dichlorobenzene	ND		0.00100	1	02/25/2016 13:11	WG850912
1,4-Dichlorobenzene	ND		0.00100	1	02/25/2016 13:11	WG850912
Dichlorodifluoromethane	ND		0.00500	1	02/25/2016 13:11	WG850912
1,1-Dichloroethane	ND		0.00100	1	02/25/2016 13:11	WG850912
1,2-Dichloroethane	ND		0.00100	1	02/25/2016 13:11	WG850912
1,1-Dichloroethene	ND		0.00100	1	02/25/2016 13:11	WG850912
cis-1,2-Dichloroethene	ND		0.00100	1	02/25/2016 13:11	WG850912
trans-1,2-Dichloroethene	ND		0.00100	1	02/25/2016 13:11	WG850912
1,2-Dichloropropane	ND		0.00100	1	02/25/2016 13:11	WG850912
1,1-Dichloropropene	ND		0.00100	1	02/25/2016 13:11	WG850912
1,3-Dichloropropane	ND		0.00100	1	02/25/2016 13:11	WG850912
cis-1,3-Dichloropropene	ND		0.00100	1	02/25/2016 13:11	WG850912
trans-1,3-Dichloropropene	ND		0.00100	1	02/25/2016 13:11	WG850912
2,2-Dichloropropane	ND		0.00100	1	02/25/2016 13:11	WG850912
Di-isopropyl ether	ND		0.00100	1	02/25/2016 13:11	WG850912
Ethylbenzene	0.0263		0.00100	1	02/25/2016 13:11	WG850912
Hexachloro-1,3-butadiene	ND		0.00100	1	02/25/2016 13:11	WG850912
Isopropylbenzene	0.00836		0.00100	1	02/25/2016 13:11	WG850912
p-Isopropyltoluene	ND		0.00100	1	02/25/2016 13:11	WG850912
2-Butanone (MEK)	ND		0.0100	1	02/25/2016 13:11	WG850912
Methylene Chloride	ND		0.00500	1	02/25/2016 13:11	WG850912
4-Methyl-2-pentanone (MIBK)	ND		0.0100	1	02/25/2016 13:11	WG850912
Methyl tert-butyl ether	ND		0.00100	1	02/25/2016 13:11	WG850912
Naphthalene	0.192		0.00500	1	02/25/2016 13:11	WG850912
n-Propylbenzene	0.0290		0.00100	1	02/25/2016 13:11	WG850912
Styrene	0.0111		0.00100	1	02/25/2016 13:11	WG850912
1,1,1,2-Tetrachloroethane	ND		0.00100	1	02/25/2016 13:11	WG850912
1,1,2,2-Tetrachloroethane	ND		0.00100	1	02/25/2016 13:11	WG850912
1,1,2-Trichlorotrifluoroethane	ND		0.00100	1	02/25/2016 13:11	WG850912
Tetrachloroethene	ND		0.00100	1	02/25/2016 13:11	WG850912
Toluene	ND		0.00500	1	02/25/2016 13:11	WG850912

Volatile Organic Compounds (GC/MS) by Method 8260B

Analyte	Result mg/l	Qualifier	RDL mg/l	Dilution	Analysis date / time	Batch
1,2,3-Trichlorobenzene	ND		0.00100	1	02/25/2016 13:11	WG850912
1,2,4-Trichlorobenzene	ND		0.00100	1	02/25/2016 13:11	WG850912
1,1,1-Trichloroethane	ND		0.00100	1	02/25/2016 13:11	WG850912
1,1,2-Trichloroethane	ND		0.00100	1	02/25/2016 13:11	WG850912
Trichloroethene	ND		0.00100	1	02/25/2016 13:11	WG850912
Trichlorofluoromethane	ND		0.00500	1	02/25/2016 13:11	WG850912
1,2,3-Trichloropropane	ND		0.00250	1	02/25/2016 13:11	WG850912
1,2,4-Trimethylbenzene	0.0670		0.00100	1	02/25/2016 13:11	WG850912
1,2,3-Trimethylbenzene	0.0568		0.00100	1	02/25/2016 13:11	WG850912
1,3,5-Trimethylbenzene	0.00721		0.00100	1	02/25/2016 13:11	WG850912
Vinyl chloride	ND		0.00100	1	02/25/2016 13:11	WG850912
Xylenes, Total	0.0958		0.00300	1	02/25/2016 13:11	WG850912
(S) Toluene-d8	*105*		*90.0-115*		*02/25/2016 13:11*	WG850912
(S) Dibromofluoromethane	*111*		*79.0-121*		*02/25/2016 13:11*	WG850912
(S) 4-Bromofluorobenzene	*99.6*		*80.1-120*		*02/25/2016 13:11*	WG850912

Volatile Organic Compounds (GC/MS) by Method 8260B

Analyte	Result mg/l	Qualifier	RDL mg/l	Dilution	Analysis date / time	Batch
Acetone	ND		0.0500	1	02/25/2016 13:30	WG850912
Acrolein	ND		0.0500	1	02/25/2016 13:30	WG850912
Acrylonitrile	ND		0.0100	1	02/25/2016 13:30	WG850912
Benzene	0.0359		0.00100	1	02/25/2016 13:30	WG850912
Bromobenzene	ND		0.00100	1	02/25/2016 13:30	WG850912
Bromodichloromethane	ND		0.00100	1	02/25/2016 13:30	WG850912
Bromoform	ND		0.00100	1	02/25/2016 13:30	WG850912
Bromomethane	ND		0.00500	1	02/25/2016 13:30	WG850912
n-Butylbenzene	0.00540		0.00100	1	02/25/2016 13:30	WG850912
sec-Butylbenzene	0.00219		0.00100	1	02/25/2016 13:30	WG850912
tert-Butylbenzene	ND		0.00100	1	02/25/2016 13:30	WG850912
Carbon tetrachloride	ND		0.00100	1	02/25/2016 13:30	WG850912
Chlorobenzene	ND		0.00100	1	02/25/2016 13:30	WG850912
Chlorodibromomethane	ND		0.00100	1	02/25/2016 13:30	WG850912
Chloroethane	ND		0.00500	1	02/25/2016 13:30	WG850912
2-Chloroethyl vinyl ether	ND	J3	0.0500	1	02/25/2016 13:30	WG850912
Chloroform	ND		0.00500	1	02/25/2016 13:30	WG850912
Chloromethane	ND		0.00250	1	02/25/2016 13:30	WG850912
2-Chlorotoluene	ND		0.00100	1	02/25/2016 13:30	WG850912
4-Chlorotoluene	ND		0.00100	1	02/25/2016 13:30	WG850912
1,2-Dibromo-3-Chloropropane	ND		0.00500	1	02/25/2016 13:30	WG850912
1,2-Dibromoethane	ND		0.00100	1	02/25/2016 13:30	WG850912
Dicyclopentadiene	0.249		0.0200	20	02/26/2016 00:34	WG852162
Dibromomethane	ND		0.00100	1	02/25/2016 13:30	WG850912
1,2-Dichlorobenzene	ND		0.00100	1	02/25/2016 13:30	WG850912
1,3-Dichlorobenzene	ND		0.00100	1	02/25/2016 13:30	WG850912
1,4-Dichlorobenzene	ND		0.00100	1	02/25/2016 13:30	WG850912
Dichlorodifluoromethane	ND		0.00500	1	02/25/2016 13:30	WG850912
1,1-Dichloroethane	ND		0.00100	1	02/25/2016 13:30	WG850912
1,2-Dichloroethane	ND		0.00100	1	02/25/2016 13:30	WG850912
1,1-Dichloroethene	ND		0.00100	1	02/25/2016 13:30	WG850912
cis-1,2-Dichloroethene	ND		0.00100	1	02/25/2016 13:30	WG850912
trans-1,2-Dichloroethene	ND		0.00100	1	02/25/2016 13:30	WG850912
1,2-Dichloropropane	ND		0.00100	1	02/25/2016 13:30	WG850912
1,1-Dichloropropene	ND		0.00100	1	02/25/2016 13:30	WG850912
1,3-Dichloropropane	ND		0.00100	1	02/25/2016 13:30	WG850912
cis-1,3-Dichloropropene	ND		0.00100	1	02/25/2016 13:30	WG850912
trans-1,3-Dichloropropene	ND		0.00100	1	02/25/2016 13:30	WG850912
2,2-Dichloropropane	ND		0.00100	1	02/25/2016 13:30	WG850912
Di-isopropyl ether	ND		0.00100	1	02/25/2016 13:30	WG850912
Ethylbenzene	0.173		0.00100	1	02/25/2016 13:30	WG850912
Hexachloro-1,3-butadiene	ND		0.00100	1	02/25/2016 13:30	WG850912
Isopropylbenzene	0.0209		0.00100	1	02/25/2016 13:30	WG850912
p-Isopropyltoluene	0.00512		0.00100	1	02/25/2016 13:30	WG850912
2-Butanone (MEK)	ND		0.0100	1	02/25/2016 13:30	WG850912
Methylene Chloride	ND		0.00500	1	02/25/2016 13:30	WG850912
4-Methyl-2-pentanone (MIBK)	ND		0.0100	1	02/25/2016 13:30	WG850912
Methyl tert-butyl ether	ND		0.00100	1	02/25/2016 13:30	WG850912
Naphthalene	0.911		0.100	20	02/26/2016 00:34	WG852162
n-Propylbenzene	0.0903		0.00100	1	02/25/2016 13:30	WG850912
Styrene	0.150		0.00100	1	02/25/2016 13:30	WG850912
1,1,1,2-Tetrachloroethane	ND		0.00100	1	02/25/2016 13:30	WG850912
1,1,2,2-Tetrachloroethane	ND		0.00100	1	02/25/2016 13:30	WG850912
1,1,2-Trichlorotrifluoroethane	ND		0.00100	1	02/25/2016 13:30	WG850912
Tetrachloroethene	ND		0.00100	1	02/25/2016 13:30	WG850912
Toluene	0.0567		0.00500	1	02/25/2016 13:30	WG850912

Volatile Organic Compounds (GC/MS) by Method 8260B

Analyte	Result mg/l	Qualifier	RDL mg/l	Dilution	Analysis date / time	Batch
1,2,3-Trichlorobenzene	ND		0.00100	1	02/25/2016 13:30	WG850912
1,2,4-Trichlorobenzene	ND		0.00100	1	02/25/2016 13:30	WG850912
1,1,1-Trichloroethane	ND		0.00100	1	02/25/2016 13:30	WG850912
1,1,2-Trichloroethane	ND		0.00100	1	02/25/2016 13:30	WG850912
Trichloroethene	ND		0.00100	1	02/25/2016 13:30	WG850912
Trichlorofluoromethane	ND		0.00500	1	02/25/2016 13:30	WG850912
1,2,3-Trichloropropane	ND		0.00250	1	02/25/2016 13:30	WG850912
1,2,4-Trimethylbenzene	0.580		0.0200	20	02/26/2016 00:34	WG852162
1,2,3-Trimethylbenzene	0.246		0.0200	20	02/26/2016 00:34	WG852162
1,3,5-Trimethylbenzene	0.0865		0.00100	1	02/25/2016 13:30	WG850912
Vinyl chloride	ND		0.00100	1	02/25/2016 13:30	WG850912
Xylenes, Total	0.582		0.0600	20	02/26/2016 00:34	WG852162
(S) Toluene-d8	*106*		*90.0-115*		*02/25/2016 13:30*	WG850912
(S) Dibromofluoromethane	*111*		*79.0-121*		*02/25/2016 13:30*	WG850912
(S) 4-Bromofluorobenzene	*103*		*80.1-120*		*02/25/2016 13:30*	WG850912

Volatile Organic Compounds (GC/MS) by Method 8260B

Analyte	Result mg/l	Qualifier	RDL mg/l	Dilution	Analysis date / time	Batch
Acetone	ND		0.0500	1	02/25/2016 13:49	WG850912
Acrolein	ND		0.0500	1	02/25/2016 13:49	WG850912
Acrylonitrile	ND		0.0100	1	02/25/2016 13:49	WG850912
Benzene	ND		0.00100	1	02/25/2016 13:49	WG850912
Bromobenzene	ND		0.00100	1	02/25/2016 13:49	WG850912
Bromodichloromethane	ND		0.00100	1	02/25/2016 13:49	WG850912
Bromoform	ND		0.00100	1	02/25/2016 13:49	WG850912
Bromomethane	ND		0.00500	1	02/25/2016 13:49	WG850912
n-Butylbenzene	ND		0.00100	1	02/25/2016 13:49	WG850912
sec-Butylbenzene	ND		0.00100	1	02/25/2016 13:49	WG850912
tert-Butylbenzene	ND		0.00100	1	02/25/2016 13:49	WG850912
Carbon tetrachloride	ND		0.00100	1	02/25/2016 13:49	WG850912
Chlorobenzene	ND		0.00100	1	02/25/2016 13:49	WG850912
Chlorodibromomethane	ND		0.00100	1	02/25/2016 13:49	WG850912
Chloroethane	ND		0.00500	1	02/25/2016 13:49	WG850912
2-Chloroethyl vinyl ether	ND	J3	0.0500	1	02/25/2016 13:49	WG850912
Chloroform	ND		0.00500	1	02/25/2016 13:49	WG850912
Chloromethane	ND		0.00250	1	02/25/2016 13:49	WG850912
2-Chlorotoluene	ND		0.00100	1	02/25/2016 13:49	WG850912
4-Chlorotoluene	ND		0.00100	1	02/25/2016 13:49	WG850912
1,2-Dibromo-3-Chloropropane	ND		0.00500	1	02/25/2016 13:49	WG850912
1,2-Dibromoethane	ND		0.00100	1	02/25/2016 13:49	WG850912
Dicyclopentadiene	0.00262		0.00100	1	02/26/2016 00:53	WG852162
Dibromomethane	ND		0.00100	1	02/25/2016 13:49	WG850912
1,2-Dichlorobenzene	ND		0.00100	1	02/25/2016 13:49	WG850912
1,3-Dichlorobenzene	ND		0.00100	1	02/25/2016 13:49	WG850912
1,4-Dichlorobenzene	ND		0.00100	1	02/25/2016 13:49	WG850912
Dichlorodifluoromethane	ND		0.00500	1	02/25/2016 13:49	WG850912
1,1-Dichloroethane	ND		0.00100	1	02/25/2016 13:49	WG850912
1,2-Dichloroethane	ND		0.00100	1	02/25/2016 13:49	WG850912
1,1-Dichloroethene	ND		0.00100	1	02/25/2016 13:49	WG850912
cis-1,2-Dichloroethene	ND		0.00100	1	02/25/2016 13:49	WG850912
trans-1,2-Dichloroethene	ND		0.00100	1	02/25/2016 13:49	WG850912
1,2-Dichloropropane	ND		0.00100	1	02/25/2016 13:49	WG850912
1,1-Dichloropropene	ND		0.00100	1	02/25/2016 13:49	WG850912
1,3-Dichloropropane	ND		0.00100	1	02/25/2016 13:49	WG850912
cis-1,3-Dichloropropene	ND		0.00100	1	02/25/2016 13:49	WG850912
trans-1,3-Dichloropropene	ND		0.00100	1	02/25/2016 13:49	WG850912
2,2-Dichloropropane	ND		0.00100	1	02/25/2016 13:49	WG850912
Di-isopropyl ether	ND		0.00100	1	02/25/2016 13:49	WG850912
Ethylbenzene	ND		0.00100	1	02/25/2016 13:49	WG850912
Hexachloro-1,3-butadiene	ND		0.00100	1	02/25/2016 13:49	WG850912
Isopropylbenzene	ND		0.00100	1	02/25/2016 13:49	WG850912
p-Isopropyltoluene	ND		0.00100	1	02/25/2016 13:49	WG850912
2-Butanone (MEK)	ND		0.0100	1	02/25/2016 13:49	WG850912
Methylene Chloride	ND		0.00500	1	02/25/2016 13:49	WG850912
4-Methyl-2-pentanone (MIBK)	ND		0.0100	1	02/25/2016 13:49	WG850912
Methyl tert-butyl ether	ND		0.00100	1	02/25/2016 13:49	WG850912
Naphthalene	ND		0.00500	1	02/26/2016 00:53	WG852162
n-Propylbenzene	ND		0.00100	1	02/25/2016 13:49	WG850912
Styrene	ND		0.00100	1	02/25/2016 13:49	WG850912
1,1,1,2-Tetrachloroethane	ND		0.00100	1	02/25/2016 13:49	WG850912
1,1,2,2-Tetrachloroethane	ND		0.00100	1	02/25/2016 13:49	WG850912
1,1,2-Trichlorotrifluoroethane	ND		0.00100	1	02/25/2016 13:49	WG850912
Tetrachloroethene	ND		0.00100	1	02/25/2016 13:49	WG850912
Toluene	ND		0.00500	1	02/25/2016 13:49	WG850912

Volatile Organic Compounds (GC/MS) by Method 8260B

Analyte	Result mg/l	Qualifier	RDL mg/l	Dilution	Analysis date / time	Batch
1,2,3-Trichlorobenzene	ND		0.00100	1	02/25/2016 13:49	WG850912
1,2,4-Trichlorobenzene	ND		0.00100	1	02/25/2016 13:49	WG850912
1,1,1-Trichloroethane	ND		0.00100	1	02/25/2016 13:49	WG850912
1,1,2-Trichloroethane	ND		0.00100	1	02/25/2016 13:49	WG850912
Trichloroethene	ND		0.00100	1	02/25/2016 13:49	WG850912
Trichlorofluoromethane	ND		0.00500	1	02/25/2016 13:49	WG850912
1,2,3-Trichloropropane	ND		0.00250	1	02/25/2016 13:49	WG850912
1,2,4-Trimethylbenzene	ND		0.00100	1	02/26/2016 00:53	WG852162
1,2,3-Trimethylbenzene	ND		0.00100	1	02/25/2016 13:49	WG850912
1,3,5-Trimethylbenzene	ND		0.00100	1	02/25/2016 13:49	WG850912
Vinyl chloride	ND		0.00100	1	02/25/2016 13:49	WG850912
Xylenes, Total	ND		0.00300	1	02/25/2016 13:49	WG850912
(S) Toluene-d8	*103*		*90.0-115*		*02/25/2016 13:49*	WG850912
(S) Dibromofluoromethane	*109*		*79.0-121*		*02/25/2016 13:49*	WG850912
(S) 4-Bromofluorobenzene	*99.5*		*80.1-120*		*02/25/2016 13:49*	WG850912

Volatile Organic Compounds (GC/MS) by Method 8260B

Analyte	Result mg/l	Qualifier	RDL mg/l	Dilution	Analysis date / time	Batch
Acetone	ND		0.0500	1	02/26/2016 01:14	WG852162
Acrolein	ND	J4	0.0500	1	02/26/2016 01:14	WG852162
Acrylonitrile	ND		0.0100	1	02/26/2016 01:14	WG852162
Benzene	0.00143		0.00100	1	02/26/2016 01:14	WG852162
Bromobenzene	ND		0.00100	1	02/26/2016 01:14	WG852162
Bromodichloromethane	ND		0.00100	1	02/26/2016 01:14	WG852162
Bromoform	ND		0.00100	1	02/26/2016 01:14	WG852162
Bromomethane	ND		0.00500	1	02/26/2016 01:14	WG852162
n-Butylbenzene	ND		0.00100	1	02/26/2016 01:14	WG852162
sec-Butylbenzene	ND		0.00100	1	02/26/2016 01:14	WG852162
tert-Butylbenzene	ND		0.00100	1	02/26/2016 01:14	WG852162
Carbon tetrachloride	ND		0.00100	1	02/26/2016 01:14	WG852162
Chlorobenzene	ND		0.00100	1	02/26/2016 01:14	WG852162
Chlorodibromomethane	ND		0.00100	1	02/26/2016 01:14	WG852162
Chloroethane	ND		0.00500	1	02/26/2016 01:14	WG852162
2-Chloroethyl vinyl ether	ND		0.0500	1	02/26/2016 01:14	WG852162
Chloroform	ND		0.00500	1	02/26/2016 01:14	WG852162
Chloromethane	ND		0.00250	1	02/26/2016 01:14	WG852162
2-Chlorotoluene	ND		0.00100	1	02/26/2016 01:14	WG852162
4-Chlorotoluene	ND		0.00100	1	02/26/2016 01:14	WG852162
1,2-Dibromo-3-Chloropropane	ND		0.00500	1	02/26/2016 01:14	WG852162
1,2-Dibromoethane	ND		0.00100	1	02/26/2016 01:14	WG852162
Dicyclopentadiene	0.00170		0.00100	1	02/26/2016 01:14	WG852162
Dibromomethane	ND		0.00100	1	02/26/2016 01:14	WG852162
1,2-Dichlorobenzene	ND		0.00100	1	02/26/2016 01:14	WG852162
1,3-Dichlorobenzene	ND		0.00100	1	02/26/2016 01:14	WG852162
1,4-Dichlorobenzene	ND		0.00100	1	02/26/2016 01:14	WG852162
Dichlorodifluoromethane	ND		0.00500	1	02/26/2016 01:14	WG852162
1,1-Dichloroethane	ND		0.00100	1	02/26/2016 01:14	WG852162
1,2-Dichloroethane	ND		0.00100	1	02/26/2016 01:14	WG852162
1,1-Dichloroethene	ND		0.00100	1	02/26/2016 01:14	WG852162
cis-1,2-Dichloroethene	ND		0.00100	1	02/26/2016 01:14	WG852162
trans-1,2-Dichloroethene	ND		0.00100	1	02/26/2016 01:14	WG852162
1,2-Dichloropropane	ND		0.00100	1	02/26/2016 01:14	WG852162
1,1-Dichloropropene	ND		0.00100	1	02/26/2016 01:14	WG852162
1,3-Dichloropropane	ND		0.00100	1	02/26/2016 01:14	WG852162
cis-1,3-Dichloropropene	ND		0.00100	1	02/26/2016 01:14	WG852162
trans-1,3-Dichloropropene	ND		0.00100	1	02/26/2016 01:14	WG852162
2,2-Dichloropropane	ND		0.00100	1	02/26/2016 01:14	WG852162
Di-isopropyl ether	ND		0.00100	1	02/26/2016 01:14	WG852162
Ethylbenzene	0.00686		0.00100	1	02/26/2016 01:14	WG852162
Hexachloro-1,3-butadiene	ND		0.00100	1	02/26/2016 01:14	WG852162
Isopropylbenzene	ND		0.00100	1	02/26/2016 01:14	WG852162
p-Isopropyltoluene	ND		0.00100	1	02/26/2016 01:14	WG852162
2-Butanone (MEK)	ND		0.0100	1	02/26/2016 01:14	WG852162
Methylene Chloride	ND		0.00500	1	02/26/2016 01:14	WG852162
4-Methyl-2-pentanone (MIBK)	ND		0.0100	1	02/26/2016 01:14	WG852162
Methyl tert-butyl ether	ND		0.00100	1	02/26/2016 01:14	WG852162
Naphthalene	0.0272		0.00500	1	02/26/2016 01:14	WG852162
n-Propylbenzene	0.00194		0.00100	1	02/26/2016 01:14	WG852162
Styrene	ND		0.00100	1	02/26/2016 01:14	WG852162
1,1,1,2-Tetrachloroethane	ND		0.00100	1	02/26/2016 01:14	WG852162
1,1,2,2-Tetrachloroethane	ND		0.00100	1	02/26/2016 01:14	WG852162
1,1,2-Trichlorotrifluoroethane	ND		0.00100	1	02/26/2016 01:14	WG852162
Tetrachloroethene	ND		0.00100	1	02/26/2016 01:14	WG852162
Toluene	ND		0.00500	1	02/26/2016 01:14	WG852162

Volatile Organic Compounds (GC/MS) by Method 8260B

Analyte	Result mg/l	Qualifier	RDL mg/l	Dilution	Analysis date / time	Batch
1,2,3-Trichlorobenzene	ND		0.00100	1	02/26/2016 01:14	WG852162
1,2,4-Trichlorobenzene	ND		0.00100	1	02/26/2016 01:14	WG852162
1,1,1-Trichloroethane	ND		0.00100	1	02/26/2016 01:14	WG852162
1,1,2-Trichloroethane	ND		0.00100	1	02/26/2016 01:14	WG852162
Trichloroethene	ND		0.00100	1	02/26/2016 01:14	WG852162
Trichlorofluoromethane	ND		0.00500	1	02/26/2016 01:14	WG852162
1,2,3-Trichloropropane	ND		0.00250	1	02/26/2016 01:14	WG852162
1,2,4-Trimethylbenzene	0.00734		0.00100	1	02/26/2016 01:14	WG852162
1,2,3-Trimethylbenzene	0.00416		0.00100	1	02/26/2016 01:14	WG852162
1,3,5-Trimethylbenzene	0.00154		0.00100	1	02/26/2016 01:14	WG852162
Vinyl chloride	ND		0.00100	1	02/26/2016 01:14	WG852162
Xylenes, Total	0.00882		0.00300	1	02/26/2016 01:14	WG852162
(S) Toluene-d8	*105*		*90.0-115*		*02/26/2016 01:14*	WG852162
(S) Dibromofluoromethane	*107*		*79.0-121*		*02/26/2016 01:14*	WG852162
(S) 4-Bromofluorobenzene	*96.0*		*80.1-120*		*02/26/2016 01:14*	WG852162

Volatile Organic Compounds (GC/MS) by Method 8260B

Analyte	Result mg/l	Qualifier	RDL mg/l	Dilution	Analysis date / time	Batch
Acetone	ND		0.0500	1	02/26/2016 01:34	WG852162
Acrolein	ND	J4	0.0500	1	02/26/2016 01:34	WG852162
Acrylonitrile	ND		0.0100	1	02/26/2016 01:34	WG852162
Benzene	0.00108		0.00100	1	02/26/2016 01:34	WG852162
Bromobenzene	ND		0.00100	1	02/26/2016 01:34	WG852162
Bromodichloromethane	ND		0.00100	1	02/26/2016 01:34	WG852162
Bromoform	ND		0.00100	1	02/26/2016 01:34	WG852162
Bromomethane	ND		0.00500	1	02/26/2016 01:34	WG852162
n-Butylbenzene	ND		0.00100	1	02/26/2016 01:34	WG852162
sec-Butylbenzene	ND		0.00100	1	02/26/2016 01:34	WG852162
tert-Butylbenzene	ND		0.00100	1	02/26/2016 01:34	WG852162
Carbon tetrachloride	ND		0.00100	1	02/26/2016 01:34	WG852162
Chlorobenzene	ND		0.00100	1	02/26/2016 01:34	WG852162
Chlorodibromomethane	ND		0.00100	1	02/26/2016 01:34	WG852162
Chloroethane	ND		0.00500	1	02/26/2016 01:34	WG852162
2-Chloroethyl vinyl ether	ND		0.0500	1	02/26/2016 01:34	WG852162
Chloroform	ND		0.00500	1	02/26/2016 01:34	WG852162
Chloromethane	ND		0.00250	1	02/26/2016 01:34	WG852162
2-Chlorotoluene	ND		0.00100	1	02/26/2016 01:34	WG852162
4-Chlorotoluene	ND		0.00100	1	02/26/2016 01:34	WG852162
1,2-Dibromo-3-Chloropropane	ND		0.00500	1	02/26/2016 01:34	WG852162
1,2-Dibromoethane	ND		0.00100	1	02/26/2016 01:34	WG852162
Dicyclopentadiene	0.00260		0.00100	1	02/26/2016 01:34	WG852162
Dibromomethane	ND		0.00100	1	02/26/2016 01:34	WG852162
1,2-Dichlorobenzene	ND		0.00100	1	02/26/2016 01:34	WG852162
1,3-Dichlorobenzene	ND		0.00100	1	02/26/2016 01:34	WG852162
1,4-Dichlorobenzene	ND		0.00100	1	02/26/2016 01:34	WG852162
Dichlorodifluoromethane	ND		0.00500	1	02/26/2016 01:34	WG852162
1,1-Dichloroethane	ND		0.00100	1	02/26/2016 01:34	WG852162
1,2-Dichloroethane	ND		0.00100	1	02/26/2016 01:34	WG852162
1,1-Dichloroethene	ND		0.00100	1	02/26/2016 01:34	WG852162
cis-1,2-Dichloroethene	ND		0.00100	1	02/26/2016 01:34	WG852162
trans-1,2-Dichloroethene	ND		0.00100	1	02/26/2016 01:34	WG852162
1,2-Dichloropropane	ND		0.00100	1	02/26/2016 01:34	WG852162
1,1-Dichloropropene	ND		0.00100	1	02/26/2016 01:34	WG852162
1,3-Dichloropropane	ND		0.00100	1	02/26/2016 01:34	WG852162
cis-1,3-Dichloropropene	ND		0.00100	1	02/26/2016 01:34	WG852162
trans-1,3-Dichloropropene	ND		0.00100	1	02/26/2016 01:34	WG852162
2,2-Dichloropropane	ND		0.00100	1	02/26/2016 01:34	WG852162
Di-isopropyl ether	ND		0.00100	1	02/26/2016 01:34	WG852162
Ethylbenzene	0.00265		0.00100	1	02/26/2016 01:34	WG852162
Hexachloro-1,3-butadiene	ND		0.00100	1	02/26/2016 01:34	WG852162
Isopropylbenzene	ND		0.00100	1	02/26/2016 01:34	WG852162
p-Isopropyltoluene	ND		0.00100	1	02/26/2016 01:34	WG852162
2-Butanone (MEK)	ND		0.0100	1	02/26/2016 01:34	WG852162
Methylene Chloride	ND		0.00500	1	02/26/2016 01:34	WG852162
4-Methyl-2-pentanone (MIBK)	ND		0.0100	1	02/26/2016 01:34	WG852162
Methyl tert-butyl ether	ND		0.00100	1	02/26/2016 01:34	WG852162
Naphthalene	0.0141		0.00500	1	02/26/2016 01:34	WG852162
n-Propylbenzene	ND		0.00100	1	02/26/2016 01:34	WG852162
Styrene	ND		0.00100	1	02/26/2016 01:34	WG852162
1,1,1,2-Tetrachloroethane	ND		0.00100	1	02/26/2016 01:34	WG852162
1,1,2,2-Tetrachloroethane	ND		0.00100	1	02/26/2016 01:34	WG852162
1,1,2-Trichlorotrifluoroethane	ND		0.00100	1	02/26/2016 01:34	WG852162
Tetrachloroethene	ND		0.00100	1	02/26/2016 01:34	WG852162
Toluene	ND		0.00500	1	02/26/2016 01:34	WG852162

Volatile Organic Compounds (GC/MS) by Method 8260B

Analyte	Result mg/l	Qualifier	RDL mg/l	Dilution	Analysis date / time	Batch
1,2,3-Trichlorobenzene	ND		0.00100	1	02/26/2016 01:34	WG852162
1,2,4-Trichlorobenzene	ND		0.00100	1	02/26/2016 01:34	WG852162
1,1,1-Trichloroethane	ND		0.00100	1	02/26/2016 01:34	WG852162
1,1,2-Trichloroethane	ND		0.00100	1	02/26/2016 01:34	WG852162
Trichloroethene	ND		0.00100	1	02/26/2016 01:34	WG852162
Trichlorofluoromethane	ND		0.00500	1	02/26/2016 01:34	WG852162
1,2,3-Trichloropropane	ND		0.00250	1	02/26/2016 01:34	WG852162
1,2,4-Trimethylbenzene	0.00278		0.00100	1	02/26/2016 01:34	WG852162
1,2,3-Trimethylbenzene	0.00219		0.00100	1	02/26/2016 01:34	WG852162
1,3,5-Trimethylbenzene	ND		0.00100	1	02/26/2016 01:34	WG852162
Vinyl chloride	ND		0.00100	1	02/26/2016 01:34	WG852162
Xylenes, Total	0.00420		0.00300	1	02/26/2016 01:34	WG852162
(S) Toluene-d8	*102*		*90.0-115*		*02/26/2016 01:34*	WG852162
(S) Dibromofluoromethane	*108*		*79.0-121*		*02/26/2016 01:34*	WG852162
(S) 4-Bromofluorobenzene	*99.9*		*80.1-120*		*02/26/2016 01:34*	WG852162

Method Blank (MB)

(MB) 02/25/16 05:39

Analyte	MB Result mg/l	MB Qualifier	MB RDL mg/l
Acetone	ND		0.0500
Acrolein	ND		0.0500
Acrylonitrile	ND		0.0100
Benzene	ND		0.00100
Bromobenzene	ND		0.00100
Bromodichloromethane	ND		0.00100
Bromoform	ND		0.00100
Bromomethane	ND		0.00500
n-Butylbenzene	ND		0.00100
sec-Butylbenzene	ND		0.00100
tert-Butylbenzene	ND		0.00100
Carbon tetrachloride	ND		0.00100
Chlorobenzene	ND		0.00100
Chlorodibromomethane	ND		0.00100
Chloroethane	ND		0.00500
2-Chloroethyl vinyl ether	ND		0.0500
Chloroform	ND		0.00500
Chloromethane	ND		0.00250
2-Chlorotoluene	ND		0.00100
4-Chlorotoluene	ND		0.00100
1,2-Dibromo-3-Chloropropane	ND		0.00500
1,2-Dibromoethane	ND		0.00100
Dibromomethane	ND		0.00100
1,2-Dichlorobenzene	ND		0.00100
1,3-Dichlorobenzene	ND		0.00100
1,4-Dichlorobenzene	ND		0.00100
Dichlorodifluoromethane	ND		0.00500
1,1-Dichloroethane	ND		0.00100
1,2-Dichloroethane	ND		0.00100
1,1-Dichloroethene	ND		0.00100
cis-1,2-Dichloroethene	ND		0.00100
trans-1,2-Dichloroethene	ND		0.00100
1,2-Dichloropropane	ND		0.00100
1,1-Dichloropropene	ND		0.00100
1,3-Dichloropropane	ND		0.00100
cis-1,3-Dichloropropene	ND		0.00100

Method Blank (MB)

(MB) 02/25/16 05:39

Analyte	MB Result mg/l	MB Qualifier	MB RDL mg/l
trans-1,3-Dichloropropene	ND		0.00100
2,2-Dichloropropane	ND		0.00100
Dicyclopentadiene	ND		0.00100
Di-isopropyl ether	ND		0.00100
Ethylbenzene	ND		0.00100
Hexachloro-1,3-butadiene	ND		0.00100
Isopropylbenzene	ND		0.00100
p-Isopropyltoluene	ND		0.00100
2-Butanone (MEK)	ND		0.0100
Methylene Chloride	ND		0.00500
4-Methyl-2-pentanone (MIBK)	ND		0.0100
Methyl tert-butyl ether	ND		0.00100
Naphthalene	ND		0.00500
n-Propylbenzene	ND		0.00100
Styrene	ND		0.00100
Toluene	ND		0.00500
1,1,1,2-Tetrachloroethane	ND		0.00100
1,1,2,2-Tetrachloroethane	ND		0.00100
Tetrachloroethene	ND		0.00100
1,1,2-Trichlorotrifluoroethane	ND		0.00100
1,2,3-Trichlorobenzene	ND		0.00100
1,2,4-Trichlorobenzene	ND		0.00100
1,1,1-Trichloroethane	ND		0.00100
1,1,2-Trichloroethane	ND		0.00100
Trichloroethene	ND		0.00100
Trichlorofluoromethane	ND		0.00500
1,2,3-Trichloropropane	ND		0.00250
1,2,3-Trimethylbenzene	ND		0.00100
1,2,4-Trimethylbenzene	ND		0.00100
Xylenes, Total	ND		0.00300
1,3,5-Trimethylbenzene	ND		0.00100
Vinyl chloride	ND		0.00100
(S) Toluene-d8	*104*		*90.0-115*
(S) Dibromofluoromethane	*110*		*79.0-121*
(S) 4-Bromofluorobenzene	*98.8*		*80.1-120*

Laboratory Control Sample (LCS) • Laboratory Control Sample Duplicate (LCSD)

(LCS) 02/25/16 04:22 • (LCSD) 02/25/16 04:41

Analyte	Spike Amount mg/l	LCS Result mg/l	LCSD Result mg/l	LCS Rec. %	LCSD Rec. %	Rec. Limits %	LCS Qualifier	LCSD Qualifier	RPD %	RPD Limits %
Acetone	0.125	0.0667	0.0703	53.3	56.3	28.7-175			5.38	20.9
Acrolein	0.125	0.129	0.139	103	111	40.4-172			7.31	20
Acrylonitrile	0.125	0.119	0.129	95.3	103	58.2-145			7.65	20
Benzene	0.0250	0.0251	0.0261	100	104	73.0-122			3.99	20
Bromobenzene	0.0250	0.0246	0.0261	98.6	104	81.5-115			5.75	20
Bromodichloromethane	0.0250	0.0237	0.0245	94.7	98.0	75.5-121			3.36	20
Bromoform	0.0250	0.0209	0.0223	83.5	89.2	71.5-131			6.60	20
Bromomethane	0.0250	0.0335	0.0336	134	134	22.4-187			0.320	20
n-Butylbenzene	0.0250	0.0290	0.0299	116	120	75.9-134			2.90	20
sec-Butylbenzene	0.0250	0.0238	0.0251	95.3	100	80.6-126			5.09	20
tert-Butylbenzene	0.0250	0.0238	0.0250	95.4	100	79.3-127			4.68	20
Carbon tetrachloride	0.0250	0.0246	0.0252	98.5	101	70.9-129			2.28	20
Chlorobenzene	0.0250	0.0233	0.0241	93.1	96.3	79.7-122			3.34	20
Chlorodibromomethane	0.0250	0.0224	0.0236	89.5	94.3	78.2-124			5.18	20
Chloroethane	0.0250	0.0289	0.0300	116	120	41.2-153			3.68	20
2-Chloroethyl vinyl ether	0.125	0.119	0.0930	95.1	74.4	23.4-162		J3	24.5	23.5
Chloroform	0.0250	0.0257	0.0269	103	108	73.2-125			4.48	20
Chloromethane	0.0250	0.0243	0.0246	97.4	98.6	55.8-134			1.23	20
2-Chlorotoluene	0.0250	0.0230	0.0235	92.0	94.0	76.4-125			2.07	20
4-Chlorotoluene	0.0250	0.0247	0.0259	98.7	103	81.5-121			4.75	20
1,2-Dibromo-3-Chloropropane	0.0250	0.0222	0.0236	88.7	94.4	64.8-131			6.15	20
1,2-Dibromoethane	0.0250	0.0236	0.0250	94.6	99.8	79.8-122			5.40	20
Dibromomethane	0.0250	0.0235	0.0240	93.9	96.1	79.5-118			2.38	20
1,2-Dichlorobenzene	0.0250	0.0261	0.0272	104	109	84.7-118			4.14	20
1,3-Dichlorobenzene	0.0250	0.0232	0.0242	92.7	96.8	77.6-127			4.29	20
1,4-Dichlorobenzene	0.0250	0.0246	0.0249	98.5	99.7	82.2-114			1.12	20
Dichlorodifluoromethane	0.0250	0.0235	0.0237	94.1	94.9	56.0-134			0.850	20
1,1-Dichloroethane	0.0250	0.0267	0.0275	107	110	71.7-127			3.17	20
1,2-Dichloroethane	0.0250	0.0259	0.0271	104	108	65.3-126			4.39	20
1,1-Dichloroethene	0.0250	0.0280	0.0290	112	116	59.9-137			3.34	20
cis-1,2-Dichloroethene	0.0250	0.0260	0.0274	104	110	77.3-122			5.13	20
trans-1,2-Dichloroethene	0.0250	0.0257	0.0266	103	106	72.6-125			3.44	20
1,2-Dichloropropane	0.0250	0.0239	0.0249	95.7	99.6	77.4-125			3.98	20
1,1-Dichloropropene	0.0250	0.0275	0.0279	110	111	72.5-127			1.41	20
1,3-Dichloropropane	0.0250	0.0242	0.0258	96.9	103	80.6-115			6.19	20
cis-1,3-Dichloropropene	0.0250	0.0238	0.0250	95.3	99.9	77.7-124			4.72	20

Laboratory Control Sample (LCS) • Laboratory Control Sample Duplicate (LCSD)

(LCS) 02/25/16 04:22 • (LCSD) 02/25/16 04:41

Analyte	Spike Amount mg/l	LCS Result mg/l	LCSD Result mg/l	LCS Rec. %	LCSD Rec. %	Rec. Limits %	LCS Qualifier	LCSD Qualifier	RPD %	RPD Limits %
trans-1,3-Dichloropropene	0.0250	0.0234	0.0245	93.8	97.9	73.5-127			4.29	20
2,2-Dichloropropane	0.0250	0.0257	0.0274	103	110	61.3-134			6.23	20
Dicyclopentadiene	0.0250	0.0244	0.0255	97.4	102	73.4-126			4.62	20
Di-isopropyl ether	0.0250	0.0246	0.0256	98.3	102	65.1-135			4.02	20
Ethylbenzene	0.0250	0.0243	0.0251	97.2	101	80.9-121			3.38	20
Hexachloro-1,3-butadiene	0.0250	0.0244	0.0254	97.6	102	73.7-133			4.13	20
Isopropylbenzene	0.0250	0.0239	0.0248	95.7	99.3	81.6-124			3.69	20
p-Isopropyltoluene	0.0250	0.0243	0.0255	97.3	102	77.6-129			4.67	20
2-Butanone (MEK)	0.125	0.0835	0.0890	66.8	71.2	46.4-155			6.38	20
Methylene Chloride	0.0250	0.0243	0.0247	97.1	98.8	69.5-120			1.71	20
4-Methyl-2-pentanone (MIBK)	0.125	0.104	0.113	83.0	90.4	63.3-138			8.48	20
Methyl tert-butyl ether	0.0250	0.0246	0.0258	98.5	103	70.1-125			4.78	20
Naphthalene	0.0250	0.0212	0.0235	84.6	94.1	69.7-134			10.6	20
n-Propylbenzene	0.0250	0.0258	0.0268	103	107	81.9-122			3.82	20
Styrene	0.0250	0.0243	0.0254	97.4	101	79.9-124			4.07	20
1,1,1,2-Tetrachloroethane	0.0250	0.0222	0.0230	88.6	92.0	78.5-125			3.74	20
1,1,2,2-Tetrachloroethane	0.0250	0.0204	0.0218	81.4	87.4	79.3-123			7.04	20
Tetrachloroethene	0.0250	0.0228	0.0237	91.1	94.8	73.5-130			4.05	20
Toluene	0.0250	0.0237	0.0247	94.8	98.9	77.9-116			4.22	20
1,1,2-Trichlorotrifluoroethane	0.0250	0.0272	0.0276	109	110	62.0-141			1.68	20
1,2,3-Trichlorobenzene	0.0250	0.0216	0.0232	86.2	92.7	75.7-134			7.19	20
1,2,4-Trichlorobenzene	0.0250	0.0241	0.0256	96.3	102	76.1-136			6.12	20
1,1,1-Trichloroethane	0.0250	0.0248	0.0258	99.3	103	71.1-129			3.82	20
1,1,2-Trichloroethane	0.0250	0.0230	0.0243	91.8	97.0	81.6-120			5.53	20
Trichloroethene	0.0250	0.0233	0.0243	93.3	97.1	79.5-121			3.97	20
Trichlorofluoromethane	0.0250	0.0264	0.0279	106	112	49.1-157			5.53	20
1,2,3-Trichloropropane	0.0250	0.0218	0.0244	87.2	97.6	74.9-124			11.2	20
1,2,3-Trimethylbenzene	0.0250	0.0257	0.0267	103	107	79.9-118			3.93	20
1,2,4-Trimethylbenzene	0.0250	0.0236	0.0247	94.3	98.9	79.0-122			4.71	20
1,3,5-Trimethylbenzene	0.0250	0.0238	0.0248	95.1	99.4	81.0-123			4.42	20
Vinyl chloride	0.0250	0.0274	0.0274	110	110	61.5-134			0.210	20
Xylenes, Total	0.0750	0.0716	0.0741	95.4	98.8	79.2-122			3.54	20
(S) Toluene-d8				*105*	*106*	*90.0-115*				
(S) Dibromofluoromethane				*108*	*109*	*79.0-121*				
(S) 4-Bromofluorobenzene				*103*	*104*	*80.1-120*				

L818788-01 Original Sample (OS) • Matrix Spike (MS) • Matrix Spike Duplicate (MSD)

(OS) 02/25/16 07:58 • (MS) 02/25/16 06:41 • (MSD) 02/25/16 07:01

Analyte	Spike Amount mg/l	Original Result mg/l	MS Result mg/l	MSD Result mg/l	MS Rec. %	MSD Rec. %	Dilution	Rec. Limits %	MS Qualifier	MSD Qualifier	RPD %	RPD Limits %
Acetone	0.125	0.00274	0.0779	0.0762	60.2	58.8	1	25.0-156			2.21	21.5
Acrolein	0.125	ND	0.176	0.173	141	138	1	34.0-194			2.03	21.5
Acrylonitrile	0.125	ND	0.167	0.162	134	130	1	55.9-161			2.99	20
Benzene	0.0250	ND	0.0277	0.0263	111	105	1	58.6-133			5.35	20
Bromobenzene	0.0250	ND	0.0274	0.0263	110	105	1	70.6-125			4.25	20
Bromodichloromethane	0.0250	ND	0.0264	0.0250	105	100	1	69.2-127			5.17	20
Bromoform	0.0250	ND	0.0250	0.0239	100	95.7	1	66.3-140			4.51	20
Bromomethane	0.0250	ND	0.0330	0.0314	132	126	1	16.6-183			4.96	20.5
n-Butylbenzene	0.0250	ND	0.0303	0.0299	121	120	1	64.8-145			1.32	20
sec-Butylbenzene	0.0250	ND	0.0255	0.0252	102	101	1	66.8-139			0.990	20
tert-Butylbenzene	0.0250	ND	0.0254	0.0249	102	99.5	1	67.1-138			2.12	20
Carbon tetrachloride	0.0250	ND	0.0267	0.0250	107	99.8	1	60.6-139			6.73	20
Chlorobenzene	0.0250	ND	0.0253	0.0243	101	97.3	1	70.1-130			3.96	20
Chlorodibromomethane	0.0250	ND	0.0252	0.0240	101	96.2	1	71.6-132			4.84	20
Chloroethane	0.0250	ND	0.0308	0.0291	123	117	1	33.3-155			5.53	20
2-Chloroethyl vinyl ether	0.125	ND	ND	ND	0.666	0.575	1	5.00-149	J6	J6	14.6	40
Chloroform	0.0250	0.000154	0.0288	0.0273	115	109	1	66.1-133			5.51	20
Chloromethane	0.0250	ND	0.0248	0.0233	99.1	93.2	1	40.7-139			6.10	20
2-Chlorotoluene	0.0250	ND	0.0247	0.0240	98.7	96.0	1	66.9-134			2.69	20
4-Chlorotoluene	0.0250	ND	0.0268	0.0261	107	104	1	66.8-134			2.74	20
1,2-Dibromo-3-Chloropropane	0.0250	ND	0.0298	0.0294	119	117	1	63.9-142			1.63	20.2
1,2-Dibromoethane	0.0250	ND	0.0274	0.0266	110	106	1	73.8-131			3.02	20
Dibromomethane	0.0250	ND	0.0272	0.0255	109	102	1	72.8-127			6.37	20
1,2-Dichlorobenzene	0.0250	ND	0.0289	0.0280	116	112	1	77.4-127			3.38	20
1,3-Dichlorobenzene	0.0250	ND	0.0249	0.0241	99.7	96.6	1	67.9-136			3.19	20
1,4-Dichlorobenzene	0.0250	ND	0.0263	0.0256	105	102	1	74.4-123			2.81	20
Dichlorodifluoromethane	0.0250	ND	0.0229	0.0220	91.4	88.0	1	42.2-146			3.78	20
1,1-Dichloroethane	0.0250	ND	0.0296	0.0278	118	111	1	64.0-134			6.12	20
1,2-Dichloroethane	0.0250	ND	0.0302	0.0285	121	114	1	60.7-132			5.85	20
1,1-Dichloroethene	0.0250	ND	0.0304	0.0283	122	113	1	48.8-144			7.26	20
cis-1,2-Dichloroethene	0.0250	ND	0.0290	0.0270	116	108	1	60.6-136			7.14	20
trans-1,2-Dichloroethene	0.0250	ND	0.0278	0.0261	111	105	1	61.0-132			6.00	20
1,2-Dichloropropane	0.0250	ND	0.0265	0.0252	106	101	1	69.7-130			5.24	20
1,1-Dichloropropene	0.0250	ND	0.0294	0.0276	118	110	1	61.5-136			6.63	20
1,3-Dichloropropane	0.0250	ND	0.0280	0.0270	112	108	1	74.3-123			3.45	20
cis-1,3-Dichloropropene	0.0250	ND	0.0269	0.0253	107	101	1	71.1-129			5.84	20

L818788-01 Original Sample (OS) • Matrix Spike (MS) • Matrix Spike Duplicate (MSD)

(OS) 02/25/16 07:58 • (MS) 02/25/16 06:41 • (MSD) 02/25/16 07:01

Analyte	Spike Amount mg/l	Original Result mg/l	MS Result mg/l	MSD Result mg/l	MS Rec. %	MSD Rec. %	Dilution	Rec. Limits %	MS Qualifier	MSD Qualifier	RPD %	RPD Limits %
trans-1,3-Dichloropropene	0.0250	ND	0.0267	0.0250	107	100	1	66.3-136			6.50	20
2,2-Dichloropropane	0.0250	ND	0.0282	0.0263	113	105	1	54.9-142			7.04	20
Dicyclopentadiene	0.0250	0.00351	0.0291	0.0284	102	99.5	1	52.6-145			2.53	20
Ethylbenzene	0.0250	ND	0.0259	0.0249	103	99.7	1	62.7-136			3.66	20
Di-isopropyl ether	0.0250	ND	0.0278	0.0261	111	105	1	59.9-140			6.35	20
Hexachloro-1,3-butadiene	0.0250	ND	0.0264	0.0256	106	103	1	61.1-144			2.87	20.1
Isopropylbenzene	0.0250	ND	0.0254	0.0249	102	99.7	1	67.4-136			1.86	20
p-Isopropyltoluene	0.0250	ND	0.0263	0.0257	105	103	1	62.8-143			2.26	20
2-Butanone (MEK)	0.125	ND	0.114	0.110	90.8	88.1	1	45.0-156			3.04	20.8
Methylene Chloride	0.0250	ND	0.0272	0.0253	109	101	1	61.5-125			6.92	20
4-Methyl-2-pentanone (MIBK)	0.125	ND	0.146	0.142	117	114	1	60.7-150			2.82	20
Methyl tert-butyl ether	0.0250	ND	0.0299	0.0275	120	110	1	61.4-136			8.57	20
Naphthalene	0.0250	0.000275	0.0269	0.0269	106	107	1	61.8-143			0.200	20
n-Propylbenzene	0.0250	ND	0.0275	0.0268	110	107	1	63.2-139			2.74	20
Styrene	0.0250	ND	0.0261	0.0255	104	102	1	68.2-133			2.23	20
1,1,1,2-Tetrachloroethane	0.0250	ND	0.0238	0.0231	95.3	92.2	1	70.5-132			3.26	20
1,1,2,2-Tetrachloroethane	0.0250	ND	0.0262	0.0253	105	101	1	64.9-145			3.73	20
Tetrachloroethene	0.0250	ND	0.0242	0.0234	96.7	93.4	1	57.4-141			3.47	20
Toluene	0.0250	ND	0.0262	0.0247	105	98.7	1	67.8-124			6.00	20
1,1,2-Trichlorotrifluoroethane	0.0250	ND	0.0294	0.0267	118	107	1	53.7-150			9.75	20
1,2,3-Trichlorobenzene	0.0250	0.000142	0.0252	0.0241	100	95.8	1	65.7-143			4.47	20
1,2,4-Trichlorobenzene	0.0250	0.000189	0.0265	0.0259	105	103	1	67.0-146			2.02	20
1,1,1-Trichloroethane	0.0250	ND	0.0274	0.0259	110	104	1	58.7-134			5.70	20
1,1,2-Trichloroethane	0.0250	ND	0.0264	0.0259	106	103	1	74.1-130			2.04	20
Trichloroethene	0.0250	ND	0.0250	0.0234	99.8	93.5	1	48.9-148			6.58	20
Trichlorofluoromethane	0.0250	ND	0.0290	0.0269	116	108	1	39.9-165			7.69	20
1,2,3-Trichloropropane	0.0250	ND	0.0284	0.0289	114	115	1	71.5-134			1.56	20
1,2,3-Trimethylbenzene	0.0250	ND	0.0281	0.0273	112	109	1	62.7-133			2.78	20
1,2,4-Trimethylbenzene	0.0250	ND	0.0256	0.0247	102	98.7	1	60.5-137			3.70	20
1,3,5-Trimethylbenzene	0.0250	ND	0.0255	0.0247	102	98.7	1	67.9-134			3.17	20
Xylenes, Total	0.0750	ND	0.0752	0.0742	100	98.9	1	65.6-133			1.41	20
Vinyl chloride	0.0250	ND	0.0283	0.0264	113	106	1	44.3-143			7.02	20
(S) Toluene-d8					*106*	*106*		*90.0-115*				
(S) Dibromofluoromethane					*110*	*110*		*79.0-121*				
(S) 4-Bromofluorobenzene					*102*	*103*		*80.1-120*				

Method Blank (MB)

(MB) 02/25/16 21:46

Analyte	MB Result mg/l	MB Qualifier	MB RDL mg/l
Acetone	ND		0.0500
Acrolein	ND		0.0500
Benzene	ND		0.00100
Acrylonitrile	ND		0.0100
Bromobenzene	ND		0.00100
Bromodichloromethane	ND		0.00100
Bromoform	ND		0.00100
Bromomethane	ND		0.00500
n-Butylbenzene	ND		0.00100
sec-Butylbenzene	ND		0.00100
tert-Butylbenzene	ND		0.00100
Carbon tetrachloride	ND		0.00100
Chlorobenzene	ND		0.00100
Chlorodibromomethane	ND		0.00100
Chloroethane	ND		0.00500
2-Chloroethyl vinyl ether	ND		0.0500
Chloroform	ND		0.00500
Chloromethane	ND		0.00250
2-Chlorotoluene	ND		0.00100
4-Chlorotoluene	ND		0.00100
1,2-Dibromo-3-Chloropropane	ND		0.00500
1,2-Dibromoethane	ND		0.00100
Dibromomethane	ND		0.00100
1,2-Dichlorobenzene	ND		0.00100
1,3-Dichlorobenzene	ND		0.00100
1,4-Dichlorobenzene	ND		0.00100
Dichlorodifluoromethane	ND		0.00500
1,1-Dichloroethane	ND		0.00100
1,2-Dichloroethane	ND		0.00100
1,1-Dichloroethene	ND		0.00100
cis-1,2-Dichloroethene	ND		0.00100
trans-1,2-Dichloroethene	ND		0.00100
1,2-Dichloropropane	ND		0.00100
1,1-Dichloropropene	ND		0.00100
1,3-Dichloropropane	ND		0.00100
cis-1,3-Dichloropropene	ND		0.00100

Method Blank (MB)

(MB) 02/25/16 21:46

Analyte	MB Result mg/l	MB Qualifier	MB RDL mg/l
trans-1,3-Dichloropropene	ND		0.00100
2,2-Dichloropropane	ND		0.00100
Dicyclopentadiene	ND		0.00100
Di-isopropyl ether	ND		0.00100
Ethylbenzene	ND		0.00100
Hexachloro-1,3-butadiene	ND		0.00100
Isopropylbenzene	ND		0.00100
2-Butanone (MEK)	ND		0.0100
p-Isopropyltoluene	ND		0.00100
Methylene Chloride	ND		0.00500
Methyl tert-butyl ether	ND		0.00100
4-Methyl-2-pentanone (MIBK)	ND		0.0100
Naphthalene	ND		0.00500
1,1,2,2-Tetrachloroethane	ND		0.00100
n-Propylbenzene	ND		0.00100
Tetrachloroethene	ND		0.00100
Styrene	ND		0.00100
1,1,1,2-Tetrachloroethane	ND		0.00100
Toluene	ND		0.00500
1,1,1-Trichloroethane	ND		0.00100
1,1,2-Trichlorotrifluoroethane	ND		0.00100
1,1,2-Trichloroethane	ND		0.00100
Trichloroethene	ND		0.00100
1,2,3-Trichlorobenzene	ND		0.00100
1,2,4-Trichlorobenzene	ND		0.00100
Trichlorofluoromethane	ND		0.00500
1,2,3-Trichloropropane	ND		0.00250
1,2,3-Trimethylbenzene	ND		0.00100
1,2,4-Trimethylbenzene	ND		0.00100
Vinyl chloride	ND		0.00100
1,3,5-Trimethylbenzene	ND		0.00100
Xylenes, Total	ND		0.00300
(S) Toluene-d8	*102*		*88.5-111*
(S) Dibromofluoromethane	*105*		*78.3-121*
(S) 4-Bromofluorobenzene	*103*		*71.0-126*

Laboratory Control Sample (LCS) • Laboratory Control Sample Duplicate (LCSD)

(LCS) 02/25/16 19:54 • (LCSD) 02/25/16 20:15

Analyte	Spike Amount mg/l	LCS Result mg/l	LCSD Result mg/l	LCS Rec. %	LCSD Rec. %	Rec. Limits %	LCS Qualifier	LCSD Qualifier	RPD %	RPD Limits %
Acetone	0.125	0.157	0.159	126	127	28.7-175			1.16	20.9
Acrolein	0.125	0.219	0.222	175	178	40.4-172	J4	J4	1.54	20
Acrylonitrile	0.125	0.136	0.138	109	110	58.2-145			1.26	20
Benzene	0.0250	0.0249	0.0259	99.4	103	73.0-122			3.99	20
Bromobenzene	0.0250	0.0247	0.0253	98.9	101	81.5-115			2.14	20
Bromodichloromethane	0.0250	0.0261	0.0264	104	106	75.5-121			1.24	20
Bromoform	0.0250	0.0265	0.0288	106	115	71.5-131			8.57	20
Bromomethane	0.0250	0.0277	0.0285	111	114	22.4-187			2.86	20
n-Butylbenzene	0.0250	0.0256	0.0270	102	108	75.9-134			5.36	20
sec-Butylbenzene	0.0250	0.0250	0.0260	100	104	80.6-126			3.85	20
tert-Butylbenzene	0.0250	0.0254	0.0263	101	105	79.3-127			3.45	20
Carbon tetrachloride	0.0250	0.0261	0.0265	104	106	70.9-129			1.59	20
Chlorobenzene	0.0250	0.0245	0.0256	98.1	102	79.7-122			4.14	20
Chlorodibromomethane	0.0250	0.0271	0.0271	109	108	78.2-124			0.320	20
Chloroethane	0.0250	0.0263	0.0268	105	107	41.2-153			1.96	20
2-Chloroethyl vinyl ether	0.125	0.144	0.153	115	122	23.4-162			5.91	23.5
Chloroform	0.0250	0.0259	0.0272	104	109	73.2-125			5.06	20
Chloromethane	0.0250	0.0252	0.0258	101	103	55.8-134			2.37	20
2-Chlorotoluene	0.0250	0.0248	0.0250	99.1	100	76.4-125			1.07	20
4-Chlorotoluene	0.0250	0.0253	0.0268	101	107	81.5-121			5.60	20
1,2-Dibromo-3-Chloropropane	0.0250	0.0284	0.0298	113	119	64.8-131			4.86	20
1,2-Dibromoethane	0.0250	0.0250	0.0254	100	102	79.8-122			1.41	20
Dibromomethane	0.0250	0.0270	0.0272	108	109	79.5-118			0.440	20
1,2-Dichlorobenzene	0.0250	0.0253	0.0268	101	107	84.7-118			5.73	20
1,3-Dichlorobenzene	0.0250	0.0250	0.0263	100	105	77.6-127			5.03	20
1,4-Dichlorobenzene	0.0250	0.0241	0.0256	96.4	102	82.2-114			5.93	20
Dichlorodifluoromethane	0.0250	0.0256	0.0261	102	104	56.0-134			1.88	20
1,2-Dichloroethane	0.0250	0.0258	0.0266	103	106	65.3-126			3.09	20
1,1-Dichloroethane	0.0250	0.0267	0.0274	107	110	71.7-127			2.71	20
1,1-Dichloroethene	0.0250	0.0267	0.0272	107	109	59.9-137			1.82	20
trans-1,2-Dichloroethene	0.0250	0.0261	0.0268	105	107	72.6-125			2.38	20
cis-1,2-Dichloroethene	0.0250	0.0263	0.0275	105	110	77.3-122			4.38	20
1,2-Dichloropropane	0.0250	0.0251	0.0268	100	107	77.4-125			6.74	20
1,1-Dichloropropene	0.0250	0.0266	0.0275	107	110	72.5-127			3.20	20
cis-1,3-Dichloropropene	0.0250	0.0264	0.0272	106	109	77.7-124			2.99	20
1,3-Dichloropropane	0.0250	0.0249	0.0261	99.7	104	80.6-115			4.64	20

Laboratory Control Sample (LCS) • Laboratory Control Sample Duplicate (LCSD)

(LCS) 02/25/16 19:54 • (LCSD) 02/25/16 20:15

Analyte	Spike Amount mg/l	LCS Result mg/l	LCSD Result mg/l	LCS Rec. %	LCSD Rec. %	Rec. Limits %	LCS Qualifier	LCSD Qualifier	RPD %	RPD Limits %
trans-1,3-Dichloropropene	0.0250	0.0276	0.0288	110	115	73.5-127			4.42	20
Di-isopropyl ether	0.0250	0.0257	0.0262	103	105	65.1-135			2.18	20
2,2-Dichloropropane	0.0250	0.0250	0.0259	100	104	61.3-134			3.42	20
Dicyclopentadiene	0.0250	0.0267	0.0275	107	110	73.4-126			3.24	20
Ethylbenzene	0.0250	0.0246	0.0253	98.2	101	80.9-121			2.98	20
Hexachloro-1,3-butadiene	0.0250	0.0260	0.0276	104	110	73.7-133			6.06	20
Isopropylbenzene	0.0250	0.0247	0.0255	98.7	102	81.6-124			3.45	20
p-Isopropyltoluene	0.0250	0.0259	0.0272	104	109	77.6-129			4.86	20
2-Butanone (MEK)	0.125	0.145	0.148	116	119	46.4-155			2.42	20
Methylene Chloride	0.0250	0.0256	0.0265	103	106	69.5-120			3.28	20
Methyl tert-butyl ether	0.0250	0.0259	0.0265	104	106	70.1-125			2.42	20
4-Methyl-2-pentanone (MIBK)	0.125	0.136	0.142	109	113	63.3-138			4.01	20
Naphthalene	0.0250	0.0274	0.0294	109	118	69.7-134			7.26	20
n-Propylbenzene	0.0250	0.0255	0.0264	102	105	81.9-122			3.39	20
Styrene	0.0250	0.0264	0.0272	105	109	79.9-124			3.20	20
1,1,1,2-Tetrachloroethane	0.0250	0.0247	0.0255	98.8	102	78.5-125			3.34	20
1,1,2,2-Tetrachloroethane	0.0250	0.0246	0.0264	98.6	105	79.3-123			6.76	20
Tetrachloroethene	0.0250	0.0246	0.0248	98.3	99.1	73.5-130			0.890	20
Toluene	0.0250	0.0243	0.0248	97.1	99.3	77.9-116			2.22	20
1,1,2-Trichlorotrifluoroethane	0.0250	0.0263	0.0265	105	106	62.0-141			0.780	20
1,2,3-Trichlorobenzene	0.0250	0.0258	0.0288	103	115	75.7-134			10.9	20
1,2,4-Trichlorobenzene	0.0250	0.0267	0.0288	107	115	76.1-136			7.61	20
1,1,1-Trichloroethane	0.0250	0.0248	0.0263	99.4	105	71.1-129			5.70	20
1,1,2-Trichloroethane	0.0250	0.0241	0.0254	96.5	102	81.6-120			5.21	20
Trichloroethene	0.0250	0.0251	0.0259	101	103	79.5-121			2.93	20
Trichlorofluoromethane	0.0250	0.0265	0.0271	106	108	49.1-157			2.31	20
1,2,3-Trichloropropane	0.0250	0.0238	0.0257	95.1	103	74.9-124			7.66	20
1,2,3-Trimethylbenzene	0.0250	0.0249	0.0261	99.5	104	79.9-118			4.71	20
1,2,4-Trimethylbenzene	0.0250	0.0242	0.0253	96.9	101	79.0-122			4.47	20
1,3,5-Trimethylbenzene	0.0250	0.0245	0.0257	98.1	103	81.0-123			4.62	20
Xylenes, Total	0.0750	0.0722	0.0747	96.2	99.6	79.2-122			3.47	20
Vinyl chloride	0.0250	0.0265	0.0266	106	106	61.5-134			0.320	20
(S) Toluene-d8				*100*	*102*	*88.5-111*				
(S) Dibromofluoromethane				*103*	*105*	*78.3-121*				
(S) 4-Bromofluorobenzene				*99.3*	*99.1*	*71.0-126*				

1 Cp
2 Tc
3 Ss
4 Cn
5 Sr
6 Qc
7 Gl
8 Al
9 Sc

Abbreviations and Definitions

SDG	Sample Delivery Group.
MDL	Method Detection Limit.
RDL	Reported Detection Limit.
ND,U	Not detected at the Reporting Limit (or MDL where applicable).
RPD	Relative Percent Difference.
(dry)	Results are reported based on the dry weight of the sample. [this will only be present on a dry report basis for soils].
Original Sample	The non-spiked sample in the prep batch used to determine the Relative Percent Difference (RPD) from a quality control sample. The Original Sample may not be included within the reported SDG.
(S)	Surrogate (Surrogate Standard) - Analytes added to every blank, sample, Laboratory Control Sample/Duplicate and Matrix Spike/Duplicate; used to evaluate analytical efficiency by measuring recovery. Surrogates are not expected to be detected in all environmental media.
Rec.	Recovery.
SDL	Sample Detection Limit.
MQL	Method Quantitation Limit.
Unadj. MQL	Unadjusted Method Quantitation Limit.

Qualifier	Description
J3	The associated batch QC was outside the established quality control range for precision.
J4	The associated batch QC was outside the established quality control range for accuracy.
J6	The sample matrix interfered with the ability to make any accurate determination; spike value is low.

ACCREDITATIONS & LOCATIONS

ONE LAB. NATIONWIDE.

ESC Lab Sciences is the only environmental laboratory accredited/certified to support your work nationwide from one location. One phone call, one point of contact, one laboratory. No other lab is as accessible or prepared to handle your needs throughout the country. Our capacity and capability from our single location laboratory is comparable to the collective totals of the network laboratories in our industry. The most significant benefit to our "one location" design is the design of our laboratory campus. The model is conducive to accelerated productivity, decreasing turn-around time, and preventing cross contamination, thus protecting sample integrity. Our focus on premium quality and prompt service allows us to be **YOUR LAB OF CHOICE.**

***** Not all certifications held by the laboratory are applicable to the results reported in the attached report.

State Accreditations

Alabama	40660
Alaska	UST-080
Arizona	AZ0612
Arkansas	88-0469
California	01157CA
Colorado	TN00003
Conneticut	PH-0197
Florida	E87487
Georgia	NELAP
Georgia [1]	923
Idaho	TN00003
Illinois	200008
Indiana	C-TN-01
Iowa	364
Kansas	E-10277
Kentucky [1]	90010
Kentucky [2]	16
Louisiana	AI30792
Maine	TN0002
Maryland	324
Massachusetts	M-TN003
Michigan	9958
Minnesota	047-999-395
Mississippi	TN00003
Missouri	340
Montana	CERT0086
Nebraska	NE-OS-15-05
Nevada	TN-03-2002-34
New Hampshire	2975
New Jersey–NELAP	TN002
New Mexico	TN00003
New York	11742
North Carolina	Env375
North Carolina [1]	DW21704
North Carolina [2]	41
North Dakota	R-140
Ohio–VAP	CL0069
Oklahoma	9915
Oregon	TN200002
Pennsylvania	68-02979
Rhode Island	221
South Carolina	84004
South Dakota	n/a
Tennessee [1 4]	2006
Texas	T 104704245-07-TX
Texas [5]	LAB0152
Utah	6157585858
Vermont	VT2006
Virginia	109
Washington	C1915
West Virginia	233
Wisconsin	9980939910
Wyoming	A2LA

Third Party & Federal Accreditations

A2LA – ISO 17025	1461.01
A2LA – ISO 17025 [5]	1461.02
Canada	1461.01
EPA–Crypto	TN00003
AIHA	100789
DOD	1461.01
USDA	S-67674

[1] Drinking Water [2] Underground Storage Tanks [3] Aquatic Toxicity [4] Chemical/Microbiological [5] Mold [n/a] Accreditation not applicable

Our Locations

ESC Lab Sciences has sixty-four client support centers that provide sample pickup and/or the delivery of sampling supplies. If you would like assistance from one of our support offices, please contact our main office. **ESC Lab Sciences performs all testing at our central laboratory.**

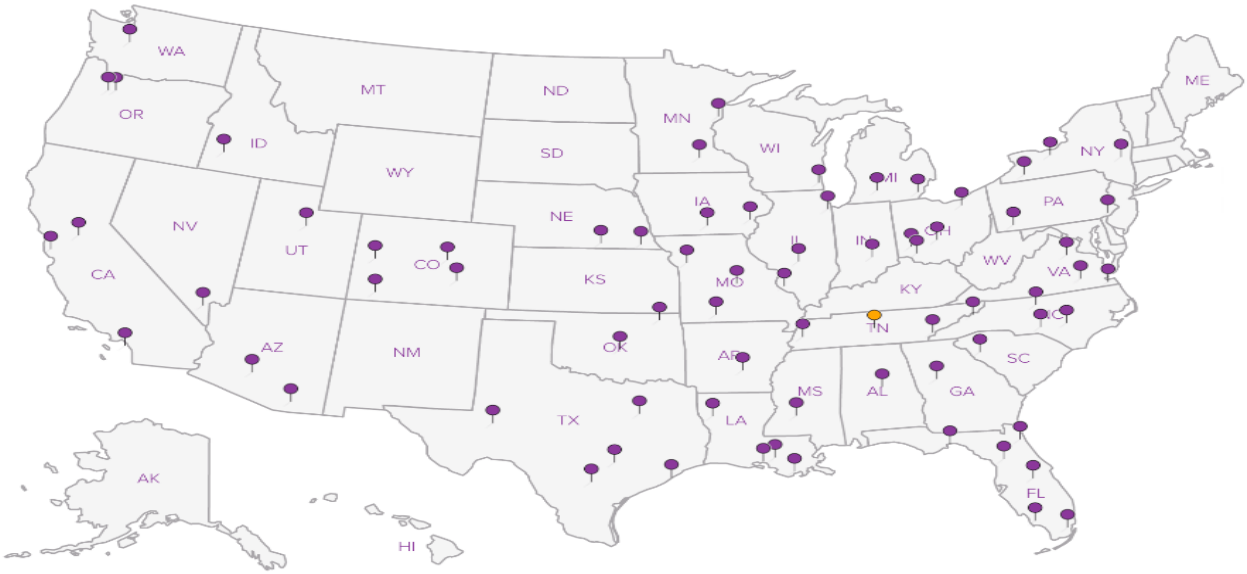

Terracon Consultants - B-Ham AL.

110 12th Street North
Birmingham, AL 35203

Billing Information:
Trey Noland
110 12th Street North
Birmingham, AL 35203

Report to: Trey Noland

Email To: trey.noland@terracon.com, mking@cecinc.com

Project Description: Site Investigation

City/State Collected:

Phone: 205-942-1289
Fax:

Client Project #

Lab Project # GALLET-E1157122

Collected by (print): Anna Samuels, J.D. Naccari

Site/Facility ID # Veros Energy

P.O. # ~~E1157122~~ E1167078

Collected by (signature):

Immediately Packed on Ice N ____ Y ✓

Rush? (Lab MUST Be Notified)
____ Same Day 200%
____ Next Day 100%
____ Two Day 50%
____ Three Day 25%

Date Results Needed

Email? ___No X_Yes
FAX? ___No ___Yes

Analysis / Container / Preservative

Chain of Custody Page ___ of ___

ESC LAB SCIENCES
YOUR LAB OF CHOICE
12065 Lebanon Rd
Mount Juliet, TN 37122
Phone: 615-758-5858
Phone: 800-767-5859
Fax: 615-758-5859

L# 1818788

G118

Acctnum: GALLET
Template: T109694
Prelogin: P541674
TSR: 350 - Jimmy Hunt
PB: 2-11-16
Shipped Via: FedEX Ground

Sample ID	Comp/Grab	Matrix *	Depth	Date	Time	No. of Cntrs	V8260 40mlAmb-HCl + Dicyclopentadiene	Rem./Contaminant	Sample # (lab only)
MW-3		GW		2-18-16	1530	2	X		-01
MW-4		GW		2-18-16	1545	2	X		02
MW-5D		GW		2-18-16	1510	2	X		03
~~MW-6~~		GW				~~2~~	X		
~~MW-8~~		GW				~~2~~	X		
MW-9		GW		2-18-16	1230	2	X		04
MW-11		GW		2-18-16	1250	2	X		05
MW-12		GW		2-18-16	1024	2	X		06
MW-15		GW		2-18-16	1000	2	X		07
DUPLICATE		GW		2-18-16	1500	2	X		08

* Matrix: SS - Soil GW - Groundwater WW - WasteWater DW - Drinking Water OT - Other_____

Remarks:

pH _____ Temp _____
Flow _____ Other _____

6617361234 7

Hold #

Relinquished by : (Signature)	Date:	Time:	Received by: (Signature)
	2-18-16	1750	
Relinquished by : (Signature)	Date:	Time:	Received by: (Signature)
Relinquished by : (Signature)	Date:	Time:	Received for lab by: (Signature)

Samples returned via: ☐ UPS ☐ FedEx ☐ Courier ☐ _____

Temp: 3.3 °C Bottles Received: 18

Date: 2/19/16 Time: 0900

Condition: (lab use only) OK JW7

COC Seal Intact: ✓ Y ___N ___NA

pH Checked: NCF:

Terracon Consultants - B-Ham AL.

110 12th Street North
Birmingham, AL 35203

Billing Information:
Trey Noland
110 12th Street North
Birmingham, AL 35203

Report to: Trey Noland

Email To: trey.noland@terracon.com, mking@cecinc.com

Project Description: Site Investigation

City/State Collected:

Phone: 205-942-1289
Fax:

Client Project #

Lab Project # GALLET-E1157122

Collected by (print): Anna Samuels, Jio Naccari

Site/Facility ID # Veros Energy

P.O. # ~~E1157122~~ E1167078

Collected by (signature):

Immediately Packed on Ice N ___ Y ✓

Rush? (Lab MUST Be Notified)
___ Same Day 200%
___ Next Day 100%
___ Two Day 50%
___ Three Day 25%

Date Results Needed

Email? ___No X__Yes
FAX? ___No ___Yes

Analysis / Container / Preservative

Sample ID	Comp/Grab	Matrix *	Depth	Date	Time	No. of Cntrs	V8260 40mlAmb-HCl + Dicyclopentadiene										Rem./Contaminant	Sample # (lab only)
DRUM		GW		2-18-16	1505	2	X											09
		GW				2	X											

* Matrix: SS - Soil GW - Groundwater WW - WasteWater DW - Drinking Water OT - Other_____

Remarks:

pH _____ Temp _____
Flow _____ Other _____

Chain of Custody Page ___ of ___

ESC LAB SCIENCES
YOUR LAB OF CHOICE
12065 Lebanon Rd
Mount Juliet, TN 37122
Phone: 615-758-5858
Phone: 800-767-5859
Fax: 615-758-5859

L# 1818788

Table #

Acctnum: GALLET
Template: T109694
Prelogin: P541674
TSR: 350 - Jimmy Hunt
PB: 2-11-16

Shipped Via: FedEx Ground

Relinquished by : (Signature)	Date:	Time:	Received by: (Signature)
	2-18-16	1730	
Relinquished by : (Signature)	Date:	Time:	Received by: (Signature)
Relinquished by : (Signature)	Date:	Time:	Received for lab by: (Signature)

Samples returned via: ☐ UPS ☐ FedEx ☐ Courier ☐ _____

Temp: 3.3 °C Bottles Received: 18

Date: 2/19/16 Time: 0900

Hold #

Condition: (lab use only) JW7

COC Seal Intact: ✓ Y ___N ___NA

pH Checked: NCF:

ANALYTICAL REPORT

August 14, 2015

Terracon Consultants - B-Ham AL.

Sample Delivery Group:	L782221
Samples Received:	08/12/2015
Project Number:	E1157122
Description:	Site Investigation
Site:	Veros Energy
Report To:	Trey Noland 110 12th Street North Birmingham, AL 35203

Entire Report Reviewed By:

Jason Romer
Technical Service Representative

Results relate only to the items tested or calibrated and are reported as rounded values. This test report shall not be reproduced, except in full, without written approval of the laboratory. Where applicable, sampling conducted by ESC is performed per guidance provided in laboratory standard operating procedures: 060302, 060303, and 060304.

TABLE OF CONTENTS

[1]Cp: Cover Page 1

[2]Tc: Table of Contents 2

[3]Ss: Sample Summary 3

[4]Cn: Case Narrative 8

[5]Sr: Sample Results 9

SB-1 0-1FT L782221-01 9

SB-1 1-3FT L782221-02 12

SB-2 0-1FT L782221-03 15

SB-2 3-5FT L782221-04 18

SB-3 0-1FT L782221-05 21

SB-3 3-5FT L782221-06 24

SB-4 0-1FT L782221-07 27

SB-4 1-3FT L782221-08 30

SB-5 0-1FT L782221-09 33

SB-5 1-3FT L782221-10 36

SB-6 0-1FT L782221-11 39

SB-6 3-5FT L782221-12 42

SB-7 0-1FT L782221-13 45

SB-7 1-3FT L782221-14 48

SB-8 0-1FT L782221-15 51

SB-8 3-5FT L782221-16 54

SB-9 0-1FT L782221-17 57

SB-9 3-5FT L782221-18 60

SB-10 0-1FT L782221-19 63

SB-10 3-5FT L782221-20 66

SB-11 0-1FT L782221-21 69

SB-11 3-5FT L782221-22 72

SB-12 0-1FT L782221-23 75

SB-12 3-5FT L782221-24 78

[6]Qc: Quality Control Summary 81

Total Solids by Method 2540 G-2011 81

Mercury by Method 7471A 84

Metals (ICP) by Method 6010B 85

Volatile Organic Compounds (GC/MS) by Method 8260B 86

Semi Volatile Organic Compounds (GC/MS) by Method 8270C 110

[7]Gl: Glossary of Terms 122

[8]Al: Accreditations & Locations 123

[9]Sc: Chain of Custody 124

SB-1 0-1FT L782221-01 Solid

Collected by: Brian Brown
Collected date/time: 08/11/15 08:58
Received date/time: 08/12/15 09:00

Method	Batch	Dilution	Preparation date/time	Analysis date/time	Analysis Analyst
Mercury by Method 7471A	WG808666	1	08/13/15 07:59	08/13/15 12:31	BRJ
Metals (ICP) by Method 6010B	WG808635	1	08/12/15 15:59	08/13/15 04:27	JDG
Semi Volatile Organic Compounds (GC/MS) by Method 8270C	WG808662	50	08/12/15 17:57	08/13/15 20:31	KMF
Total Solids by Method 2540 G-2011	WG808613	1	08/12/15 14:51	08/13/15 07:07	KDW
Volatile Organic Compounds (GC/MS) by Method 8260B	WG808624	500	08/12/15 14:29	08/12/15 23:57	MCB
Volatile Organic Compounds (GC/MS) by Method 8260B	WG809036	2500	08/13/15 08:30	08/13/15 22:53	MCB

SB-1 1-3FT L782221-02 Solid

Collected by: Brian Brown
Collected date/time: 08/11/15 09:05
Received date/time: 08/12/15 09:00

Method	Batch	Dilution	Preparation date/time	Analysis date/time	Analysis Analyst
Semi Volatile Organic Compounds (GC/MS) by Method 8270C	WG808662	5	08/12/15 17:57	08/13/15 16:17	KMF
Semi Volatile Organic Compounds (GC/MS) by Method 8270C	WG808662	50	08/12/15 17:57	08/14/15 09:17	KMF
Total Solids by Method 2540 G-2011	WG808613	1	08/12/15 14:51	08/13/15 07:07	KDW
Volatile Organic Compounds (GC/MS) by Method 8260B	WG808624	500	08/12/15 14:29	08/13/15 00:16	MCB
Volatile Organic Compounds (GC/MS) by Method 8260B	WG809036	5000	08/13/15 08:30	08/13/15 23:13	MCB

SB-2 0-1FT L782221-03 Solid

Collected by: Brian Brown
Collected date/time: 08/11/15 09:29
Received date/time: 08/12/15 09:00

Method	Batch	Dilution	Preparation date/time	Analysis date/time	Analysis Analyst
Mercury by Method 7471A	WG808666	1	08/13/15 07:59	08/13/15 12:34	BRJ
Metals (ICP) by Method 6010B	WG808635	1	08/12/15 15:59	08/13/15 04:30	JDG
Semi Volatile Organic Compounds (GC/MS) by Method 8270C	WG808662	25	08/12/15 17:57	08/14/15 12:24	KMF
Semi Volatile Organic Compounds (GC/MS) by Method 8270C	WG808662	5	08/12/15 17:57	08/13/15 19:45	KMF
Total Solids by Method 2540 G-2011	WG808613	1	08/12/15 14:51	08/13/15 07:08	KDW
Volatile Organic Compounds (GC/MS) by Method 8260B	WG809036	25	08/13/15 08:30	08/13/15 23:32	MCB

SB-2 3-5FT L782221-04 Solid

Collected by: Brian Brown
Collected date/time: 08/11/15 09:34
Received date/time: 08/12/15 09:00

Method	Batch	Dilution	Preparation date/time	Analysis date/time	Analysis Analyst
Semi Volatile Organic Compounds (GC/MS) by Method 8270C	WG808662	1	08/12/15 17:57	08/13/15 12:23	KMF
Total Solids by Method 2540 G-2011	WG808613	1	08/12/15 14:51	08/13/15 07:08	KDW
Volatile Organic Compounds (GC/MS) by Method 8260B	WG808624	25	08/12/15 14:29	08/13/15 00:56	MCB

SB-3 0-1FT L782221-05 Solid

Collected by: Brian Brown
Collected date/time: 08/11/15 09:51
Received date/time: 08/12/15 09:00

Method	Batch	Dilution	Preparation date/time	Analysis date/time	Analysis Analyst
Mercury by Method 7471A	WG808666	1	08/13/15 07:59	08/13/15 12:37	BRJ
Metals (ICP) by Method 6010B	WG808635	1	08/12/15 15:59	08/13/15 04:38	JDG
Semi Volatile Organic Compounds (GC/MS) by Method 8270C	WG808662	5	08/12/15 17:57	08/13/15 17:27	KMF
Total Solids by Method 2540 G-2011	WG808613	1	08/12/15 14:51	08/13/15 07:08	KDW
Volatile Organic Compounds (GC/MS) by Method 8260B	WG808624	25	08/12/15 14:29	08/13/15 01:15	MCB

SB-3 3-5FT L782221-06 Solid

Collected by: Brian Brown | Collected date/time: 08/11/15 09:55 | Received date/time: 08/12/15 09:00

Method	Batch	Dilution	Preparation date/time	Analysis date/time	Analysis Analyst
Semi Volatile Organic Compounds (GC/MS) by Method 8270C	WG808662	1	08/12/15 17:57	08/13/15 12:46	KMF
Total Solids by Method 2540 G-2011	WG808614	1	08/12/15 15:18	08/13/15 07:16	KDW
Volatile Organic Compounds (GC/MS) by Method 8260B	WG809036	5	08/13/15 08:30	08/13/15 23:52	MCB

SB-4 0-1FT L782221-07 Solid

Collected by: Brian Brown | Collected date/time: 08/11/15 10:26 | Received date/time: 08/12/15 09:00

Method	Batch	Dilution	Preparation date/time	Analysis date/time	Analysis Analyst
Mercury by Method 7471A	WG808666	1	08/13/15 07:59	08/13/15 12:40	BRJ
Metals (ICP) by Method 6010B	WG808635	1	08/12/15 15:59	08/13/15 04:41	JDG
Semi Volatile Organic Compounds (GC/MS) by Method 8270C	WG808662	50	08/12/15 17:57	08/13/15 20:54	KMF
Semi Volatile Organic Compounds (GC/MS) by Method 8270C	WG808662	500	08/12/15 17:57	08/14/15 11:14	KMF
Total Solids by Method 2540 G-2011	WG808614	1	08/12/15 15:18	08/13/15 07:16	KDW
Volatile Organic Compounds (GC/MS) by Method 8260B	WG808624	500	08/12/15 14:29	08/13/15 01:55	MCB
Volatile Organic Compounds (GC/MS) by Method 8260B	WG809036	2500	08/13/15 08:30	08/14/15 00:11	MCB

SB-4 1-3FT L782221-08 Solid

Collected by: Brian Brown | Collected date/time: 08/11/15 10:32 | Received date/time: 08/12/15 09:00

Method	Batch	Dilution	Preparation date/time	Analysis date/time	Analysis Analyst
Semi Volatile Organic Compounds (GC/MS) by Method 8270C	WG808662	50	08/12/15 17:57	08/13/15 21:18	KMF
Semi Volatile Organic Compounds (GC/MS) by Method 8270C	WG808662	500	08/12/15 17:57	08/14/15 11:37	KMF
Total Solids by Method 2540 G-2011	WG808614	1	08/12/15 15:18	08/13/15 07:17	KDW
Volatile Organic Compounds (GC/MS) by Method 8260B	WG808624	500	08/12/15 14:29	08/13/15 02:14	MCB
Volatile Organic Compounds (GC/MS) by Method 8260B	WG809036	5000	08/13/15 08:30	08/14/15 00:31	MCB

SB-5 0-1FT L782221-09 Solid

Collected by: Brian Brown | Collected date/time: 08/11/15 12:54 | Received date/time: 08/12/15 09:00

Method	Batch	Dilution	Preparation date/time	Analysis date/time	Analysis Analyst
Mercury by Method 7471A	WG808666	1	08/13/15 07:59	08/13/15 12:43	BRJ
Metals (ICP) by Method 6010B	WG808635	1	08/12/15 15:59	08/13/15 04:44	JDG
Semi Volatile Organic Compounds (GC/MS) by Method 8270C	WG808662	5	08/12/15 17:57	08/13/15 19:21	KMF
Total Solids by Method 2540 G-2011	WG808614	1	08/12/15 15:18	08/13/15 07:17	KDW
Volatile Organic Compounds (GC/MS) by Method 8260B	WG808624	5	08/12/15 14:29	08/13/15 02:34	MCB
Volatile Organic Compounds (GC/MS) by Method 8260B	WG809036	5	08/13/15 08:30	08/14/15 00:51	MCB

SB-5 1-3FT L782221-10 Solid

Collected by: Brian Brown | Collected date/time: 08/11/15 13:01 | Received date/time: 08/12/15 09:00

Method	Batch	Dilution	Preparation date/time	Analysis date/time	Analysis Analyst
Semi Volatile Organic Compounds (GC/MS) by Method 8270C	WG808662	5	08/12/15 17:57	08/13/15 17:50	KMF
Total Solids by Method 2540 G-2011	WG808614	1	08/12/15 15:18	08/13/15 07:18	KDW
Volatile Organic Compounds (GC/MS) by Method 8260B	WG808624	5	08/12/15 14:29	08/13/15 02:54	MCB

SB-6 0-1FT L782221-11 Solid

Collected by: Brian Brown | Collected date/time: 08/11/15 11:16 | Received date/time: 08/12/15 09:00

Method	Batch	Dilution	Preparation date/time	Analysis date/time	Analysis Analyst
Mercury by Method 7471A	WG808666	1	08/13/15 07:59	08/13/15 12:51	BRJ
Metals (ICP) by Method 6010B	WG808635	1	08/12/15 15:59	08/13/15 04:47	JDG
Semi Volatile Organic Compounds (GC/MS) by Method 8270C	WG808662	10	08/12/15 17:57	08/14/15 10:51	KMF
Semi Volatile Organic Compounds (GC/MS) by Method 8270C	WG808662	5	08/12/15 17:57	08/13/15 17:03	KMF
Total Solids by Method 2540 G-2011	WG808614	1	08/12/15 15:18	08/13/15 07:18	KDW
Volatile Organic Compounds (GC/MS) by Method 8260B	WG808625	200	08/12/15 14:32	08/13/15 03:48	KLO

SB-6 3-5FT L782221-12 Solid

Collected by: Brian Brown | Collected date/time: 08/11/15 11:22 | Received date/time: 08/12/15 09:00

Method	Batch	Dilution	Preparation date/time	Analysis date/time	Analysis Analyst
Semi Volatile Organic Compounds (GC/MS) by Method 8270C	WG808662	1	08/12/15 17:57	08/13/15 13:57	KMF
Semi Volatile Organic Compounds (GC/MS) by Method 8270C	WG808662	5	08/12/15 17:57	08/14/15 09:41	KMF
Total Solids by Method 2540 G-2011	WG808614	1	08/12/15 15:18	08/13/15 07:19	KDW
Volatile Organic Compounds (GC/MS) by Method 8260B	WG808625	500	08/12/15 14:32	08/13/15 04:08	KLO

SB-7 0-1FT L782221-13 Solid

Collected by: Brian Brown | Collected date/time: 08/11/15 10:51 | Received date/time: 08/12/15 09:00

Method	Batch	Dilution	Preparation date/time	Analysis date/time	Analysis Analyst
Mercury by Method 7471A	WG808666	1	08/13/15 07:59	08/13/15 12:54	BRJ
Metals (ICP) by Method 6010B	WG808635	1	08/12/15 15:59	08/13/15 04:50	JDG
Semi Volatile Organic Compounds (GC/MS) by Method 8270C	WG808662	1	08/12/15 17:57	08/14/15 07:20	KMF
Total Solids by Method 2540 G-2011	WG808614	1	08/12/15 15:18	08/13/15 07:19	KDW
Volatile Organic Compounds (GC/MS) by Method 8260B	WG808625	5	08/12/15 14:32	08/13/15 04:29	KLO

SB-7 1-3FT L782221-14 Solid

Collected by: Brian Brown | Collected date/time: 08/11/15 10:58 | Received date/time: 08/12/15 09:00

Method	Batch	Dilution	Preparation date/time	Analysis date/time	Analysis Analyst
Semi Volatile Organic Compounds (GC/MS) by Method 8270C	WG808662	1	08/12/15 17:57	08/13/15 15:07	KMF
Total Solids by Method 2540 G-2011	WG808614	1	08/12/15 15:18	08/13/15 07:19	KDW
Volatile Organic Compounds (GC/MS) by Method 8260B	WG809036	5	08/13/15 08:30	08/14/15 01:10	MCB

SB-8 0-1FT L782221-15 Solid

Collected by: Brian Brown | Collected date/time: 08/11/15 13:19 | Received date/time: 08/12/15 09:00

Method	Batch	Dilution	Preparation date/time	Analysis date/time	Analysis Analyst
Mercury by Method 7471A	WG808666	1	08/13/15 07:59	08/13/15 12:57	BRJ
Metals (ICP) by Method 6010B	WG808635	1	08/12/15 15:59	08/13/15 04:53	JDG
Semi Volatile Organic Compounds (GC/MS) by Method 8270C	WG808662	1	08/12/15 17:57	08/13/15 13:10	KMF
Total Solids by Method 2540 G-2011	WG808614	1	08/12/15 15:18	08/13/15 07:19	KDW
Volatile Organic Compounds (GC/MS) by Method 8260B	WG809036	5	08/13/15 08:30	08/14/15 01:30	MCB

SB-8 3-5FT L782221-16 Solid

Collected by: Brian Brown | Collected date/time: 08/11/15 13:25 | Received date/time: 08/12/15 09:00

Method	Batch	Dilution	Preparation date/time	Analysis date/time	Analysis Analyst
Semi Volatile Organic Compounds (GC/MS) by Method 8270C	WG808662	1	08/12/15 17:57	08/13/15 13:33	KMF
Total Solids by Method 2540 G-2011	WG808615	1	08/12/15 15:04	08/13/15 07:11	KDW
Volatile Organic Compounds (GC/MS) by Method 8260B	WG809036	5	08/13/15 08:30	08/14/15 01:49	MCB

1 Cp
2 Tc
3 Ss
4 Cn
5 Sr
6 Qc
7 Gl
8 Al
9 Sc

SB-9 0-1FT L782221-17 Solid

Collected by: Brian Brown
Collected date/time: 08/11/15 13:33
Received date/time: 08/12/15 09:00

Method	Batch	Dilution	Preparation date/time	Analysis date/time	Analysis Analyst
Mercury by Method 7471A	WG808666	1	08/13/15 07:59	08/13/15 13:00	BRJ
Metals (ICP) by Method 6010B	WG808635	1	08/12/15 15:59	08/13/15 04:56	JDG
Semi Volatile Organic Compounds (GC/MS) by Method 8270C	WG808662	10	08/12/15 17:57	08/13/15 20:08	KMF
Semi Volatile Organic Compounds (GC/MS) by Method 8270C	WG808662	50	08/12/15 17:57	08/14/15 12:47	KMF
Total Solids by Method 2540 G-2011	WG808615	1	08/12/15 15:04	08/13/15 07:11	KDW
Volatile Organic Compounds (GC/MS) by Method 8260B	WG808625	5	08/12/15 14:32	08/13/15 05:52	KLO

SB-9 3-5FT L782221-18 Solid

Collected by: Brian Brown
Collected date/time: 08/11/15 13:41
Received date/time: 08/12/15 09:00

Method	Batch	Dilution	Preparation date/time	Analysis date/time	Analysis Analyst
Semi Volatile Organic Compounds (GC/MS) by Method 8270C	WG808662	100	08/12/15 17:57	08/13/15 21:41	KMF
Semi Volatile Organic Compounds (GC/MS) by Method 8270C	WG808662	1000	08/12/15 17:57	08/14/15 12:01	KMF
Total Solids by Method 2540 G-2011	WG808615	1	08/12/15 15:04	08/13/15 07:11	KDW
Volatile Organic Compounds (GC/MS) by Method 8260B	WG808625	500	08/12/15 14:32	08/13/15 06:12	KLO
Volatile Organic Compounds (GC/MS) by Method 8260B	WG809036	10000	08/13/15 08:30	08/14/15 02:09	MCB

SB-10 0-1FT L782221-19 Solid

Collected by: Brian Brown
Collected date/time: 08/11/15 14:08
Received date/time: 08/12/15 09:00

Method	Batch	Dilution	Preparation date/time	Analysis date/time	Analysis Analyst
Mercury by Method 7471A	WG808666	1	08/13/15 07:59	08/13/15 13:03	BRJ
Metals (ICP) by Method 6010B	WG808635	1	08/12/15 15:59	08/13/15 04:59	JDG
Semi Volatile Organic Compounds (GC/MS) by Method 8270C	WG808662	1	08/12/15 17:57	08/13/15 15:30	KMF
Semi Volatile Organic Compounds (GC/MS) by Method 8270C	WG808662	10	08/12/15 17:57	08/14/15 08:30	KMF
Total Solids by Method 2540 G-2011	WG808615	1	08/12/15 15:04	08/13/15 07:11	KDW
Volatile Organic Compounds (GC/MS) by Method 8260B	WG808625	5	08/12/15 14:32	08/13/15 06:33	KLO
Volatile Organic Compounds (GC/MS) by Method 8260B	WG809036	5	08/13/15 08:30	08/14/15 02:29	MCB

SB-10 3-5FT L782221-20 Solid

Collected by: Brian Brown
Collected date/time: 08/11/15 14:14
Received date/time: 08/12/15 09:00

Method	Batch	Dilution	Preparation date/time	Analysis date/time	Analysis Analyst
Semi Volatile Organic Compounds (GC/MS) by Method 8270C	WG808662	1	08/12/15 17:57	08/13/15 15:54	KMF
Semi Volatile Organic Compounds (GC/MS) by Method 8270C	WG808662	20	08/12/15 17:57	08/14/15 08:54	KMF
Total Solids by Method 2540 G-2011	WG808615	1	08/12/15 15:04	08/13/15 07:12	KDW
Volatile Organic Compounds (GC/MS) by Method 8260B	WG808625	25	08/12/15 14:32	08/13/15 06:53	KLO

SB-11 0-1FT L782221-21 Solid

Collected by: Brian Brown
Collected date/time: 08/11/15 14:30
Received date/time: 08/12/15 09:00

Method	Batch	Dilution	Preparation date/time	Analysis date/time	Analysis Analyst
Mercury by Method 7471A	WG808666	1	08/13/15 07:59	08/13/15 13:06	BRJ
Metals (ICP) by Method 6010B	WG808635	1	08/12/15 15:59	08/13/15 05:02	JDG
Semi Volatile Organic Compounds (GC/MS) by Method 8270C	WG808663	10	08/13/15 01:25	08/13/15 16:26	KMF
Semi Volatile Organic Compounds (GC/MS) by Method 8270C	WG808663	100	08/13/15 01:25	08/14/15 13:11	KMF
Total Solids by Method 2540 G-2011	WG808615	1	08/12/15 15:04	08/13/15 07:12	KDW
Volatile Organic Compounds (GC/MS) by Method 8260B	WG808625	25	08/12/15 14:32	08/13/15 07:14	KLO

SB-11 3-5FT L782221-22 Solid

Collected by: Brian Brown
Collected date/time: 08/11/15 14:38
Received date/time: 08/12/15 09:00

Method	Batch	Dilution	Preparation date/time	Analysis date/time	Analysis Analyst
Semi Volatile Organic Compounds (GC/MS) by Method 8270C	WG808663	1	08/13/15 01:25	08/13/15 14:22	KMF
Total Solids by Method 2540 G-2011	WG808615	1	08/12/15 15:04	08/13/15 07:12	KDW
Volatile Organic Compounds (GC/MS) by Method 8260B	WG808839	25	08/14/15 12:47	08/14/15 13:07	KLO

SB-12 0-1FT L782221-23 Solid

Collected by: Brian Brown
Collected date/time: 08/11/15 15:00
Received date/time: 08/12/15 09:00

Method	Batch	Dilution	Preparation date/time	Analysis date/time	Analysis Analyst
Mercury by Method 7471A	WG808666	1	08/13/15 07:59	08/13/15 13:09	BRJ
Metals (ICP) by Method 6010B	WG808635	1	08/12/15 15:59	08/13/15 05:05	JDG
Semi Volatile Organic Compounds (GC/MS) by Method 8270C	WG808663	1	08/13/15 01:25	08/13/15 16:01	KMF
Total Solids by Method 2540 G-2011	WG808615	1	08/12/15 15:04	08/13/15 07:12	KDW
Volatile Organic Compounds (GC/MS) by Method 8260B	WG808625	5	08/12/15 14:32	08/13/15 07:55	KLO

SB-12 3-5FT L782221-24 Solid

Collected by: Brian Brown
Collected date/time: 08/11/15 15:06
Received date/time: 08/12/15 09:00

Method	Batch	Dilution	Preparation date/time	Analysis date/time	Analysis Analyst
Semi Volatile Organic Compounds (GC/MS) by Method 8270C	WG808663	1	08/13/15 01:25	08/13/15 14:46	KMF
Total Solids by Method 2540 G-2011	WG808615	1	08/12/15 15:04	08/13/15 07:13	KDW
Volatile Organic Compounds (GC/MS) by Method 8260B	WG809036	5	08/13/15 08:30	08/14/15 03:08	MCB

1 Cp
2 Tc
3 Ss
4 Cn
5 Sr
6 Qc
7 Gl
8 Al
9 Sc

All sample aliquots were received at the correct temperature, in the proper containers, with the appropriate preservatives, and within method specified holding times. All MDL (LOD) and RL (LOQ) values reported for environmental samples have been corrected for the dilution factor used in the analysis. All Method and Batch Quality Control are within established criteria except where addressed in this case narrative, a non-conformance form or properly qualified within the sample results. By my digital signature below, I affirm to the best of my knowledge, all problems/anomalies observed by the laboratory as having the potential to affect the quality of the data have been identified by the laboratory, and no information or data have been knowingly withheld that would affect the quality of the

Jason Romer
Technical Service Representative

Total Solids by Method 2540 G-2011

Analyte	Result %	Qualifier	Dilution	Analysis date / time	Batch
Total Solids	88.8		1	08/13/2015 07:07	WG808613

Mercury by Method 7471A

Analyte	Result (dry) mg/kg	Qualifier	RDL (dry) mg/kg	Dilution	Analysis date / time	Batch
Mercury	0.172		0.0225	1	08/13/2015 12:31	WG808666

Metals (ICP) by Method 6010B

Analyte	Result (dry) mg/kg	Qualifier	RDL (dry) mg/kg	Dilution	Analysis date / time	Batch
Arsenic	ND		2.25	1	08/13/2015 04:27	WG808635
Barium	7.50		0.563	1	08/13/2015 04:27	WG808635
Cadmium	ND		0.563	1	08/13/2015 04:27	WG808635
Chromium	26.5		1.13	1	08/13/2015 04:27	WG808635
Lead	214		0.563	1	08/13/2015 04:27	WG808635
Selenium	ND		2.25	1	08/13/2015 04:27	WG808635
Silver	ND		1.13	1	08/13/2015 04:27	WG808635

Volatile Organic Compounds (GC/MS) by Method 8260B

Analyte	Result (dry) mg/kg	Qualifier	RDL (dry) mg/kg	Dilution	Analysis date / time	Batch
Acetone	ND		28.1	500	08/12/2015 23:57	WG808624
Acrylonitrile	ND		5.63	500	08/12/2015 23:57	WG808624
Benzene	ND		0.563	500	08/12/2015 23:57	WG808624
Bromobenzene	ND		0.563	500	08/12/2015 23:57	WG808624
Bromodichloromethane	ND		0.563	500	08/12/2015 23:57	WG808624
Bromoform	ND		0.563	500	08/12/2015 23:57	WG808624
Bromomethane	ND		2.81	500	08/12/2015 23:57	WG808624
n-Butylbenzene	6.70		0.563	500	08/12/2015 23:57	WG808624
sec-Butylbenzene	2.43		0.563	500	08/12/2015 23:57	WG808624
tert-Butylbenzene	ND		0.563	500	08/12/2015 23:57	WG808624
Carbon tetrachloride	ND		0.563	500	08/12/2015 23:57	WG808624
Chlorobenzene	ND		0.563	500	08/12/2015 23:57	WG808624
Chlorodibromomethane	ND		0.563	500	08/12/2015 23:57	WG808624
Chloroethane	ND		2.81	500	08/12/2015 23:57	WG808624
2-Chloroethyl vinyl ether	ND		28.1	500	08/12/2015 23:57	WG808624
Chloroform	ND		2.81	500	08/12/2015 23:57	WG808624
Chloromethane	ND		1.41	500	08/12/2015 23:57	WG808624
2-Chlorotoluene	ND		0.563	500	08/12/2015 23:57	WG808624
4-Chlorotoluene	ND		0.563	500	08/12/2015 23:57	WG808624
1,2-Dibromo-3-Chloropropane	ND		2.81	500	08/12/2015 23:57	WG808624
1,2-Dibromoethane	ND		0.563	500	08/12/2015 23:57	WG808624
Dibromomethane	ND		0.563	500	08/12/2015 23:57	WG808624
1,2-Dichlorobenzene	ND		0.563	500	08/12/2015 23:57	WG808624
1,3-Dichlorobenzene	ND		0.563	500	08/12/2015 23:57	WG808624
1,4-Dichlorobenzene	ND		0.563	500	08/12/2015 23:57	WG808624
Dichlorodifluoromethane	ND		2.81	500	08/12/2015 23:57	WG808624
1,1-Dichloroethane	ND		0.563	500	08/12/2015 23:57	WG808624
1,2-Dichloroethane	ND		0.563	500	08/12/2015 23:57	WG808624
1,1-Dichloroethene	ND		0.563	500	08/12/2015 23:57	WG808624
cis-1,2-Dichloroethene	ND		0.563	500	08/12/2015 23:57	WG808624
trans-1,2-Dichloroethene	ND		0.563	500	08/12/2015 23:57	WG808624
1,2-Dichloropropane	ND		0.563	500	08/12/2015 23:57	WG808624
1,1-Dichloropropene	ND		0.563	500	08/12/2015 23:57	WG808624

Volatile Organic Compounds (GC/MS) by Method 8260B

Analyte	Result (dry) mg/kg	Qualifier	RDL (dry) mg/kg	Dilution	Analysis date / time	Batch
1,3-Dichloropropane	ND		0.563	500	08/12/2015 23:57	WG808624
cis-1,3-Dichloropropene	ND		0.563	500	08/12/2015 23:57	WG808624
trans-1,3-Dichloropropene	ND		0.563	500	08/12/2015 23:57	WG808624
2,2-Dichloropropane	ND		0.563	500	08/12/2015 23:57	WG808624
Dicyclopentadiene	309		2.81	2500	08/13/2015 22:53	WG809036
Di-isopropyl ether	ND		0.563	500	08/12/2015 23:57	WG808624
Ethylbenzene	27.3		0.563	500	08/12/2015 23:57	WG808624
Hexachloro-1,3-butadiene	ND		0.563	500	08/12/2015 23:57	WG808624
Isopropylbenzene	6.02		0.563	500	08/12/2015 23:57	WG808624
p-Isopropyltoluene	4.61		0.563	500	08/12/2015 23:57	WG808624
2-Butanone (MEK)	ND		5.63	500	08/12/2015 23:57	WG808624
Methylene Chloride	ND		2.81	500	08/12/2015 23:57	WG808624
4-Methyl-2-pentanone (MIBK)	ND		5.63	500	08/12/2015 23:57	WG808624
Methyl tert-butyl ether	ND		0.563	500	08/12/2015 23:57	WG808624
Naphthalene	295		14.1	2500	08/13/2015 22:53	WG809036
n-Propylbenzene	36.9		0.563	500	08/12/2015 23:57	WG808624
Styrene	0.999		0.563	500	08/12/2015 23:57	WG808624
1,1,1,2-Tetrachloroethane	ND		0.563	500	08/12/2015 23:57	WG808624
1,1,2,2-Tetrachloroethane	ND		0.563	500	08/12/2015 23:57	WG808624
1,1,2-Trichlorotrifluoroethane	ND		0.563	500	08/12/2015 23:57	WG808624
Tetrachloroethene	ND		0.563	500	08/12/2015 23:57	WG808624
Toluene	ND		2.81	500	08/12/2015 23:57	WG808624
1,2,3-Trichlorobenzene	ND		0.563	500	08/12/2015 23:57	WG808624
1,2,4-Trichlorobenzene	ND		0.563	500	08/12/2015 23:57	WG808624
1,1,1-Trichloroethane	ND		0.563	500	08/12/2015 23:57	WG808624
1,1,2-Trichloroethane	ND		0.563	500	08/12/2015 23:57	WG808624
Trichloroethene	ND		0.563	500	08/12/2015 23:57	WG808624
Trichlorofluoromethane	ND		2.81	500	08/12/2015 23:57	WG808624
1,2,3-Trichloropropane	ND		1.41	500	08/12/2015 23:57	WG808624
1,2,4-Trimethylbenzene	347		2.81	2500	08/13/2015 22:53	WG809036
1,2,3-Trimethylbenzene	167		2.81	2500	08/13/2015 22:53	WG809036
1,3,5-Trimethylbenzene	147		2.81	2500	08/13/2015 22:53	WG809036
Vinyl chloride	ND		0.563	500	08/12/2015 23:57	WG808624
Xylenes, Total	174		1.69	500	08/12/2015 23:57	WG808624
(S) Toluene-d8	*102*		*88.7-115*		*08/12/2015 23:57*	WG808624
(S) Dibromofluoromethane	*88.9*		*76.3-123*		*08/12/2015 23:57*	WG808624
(S) 4-Bromofluorobenzene	*107*		*69.7-129*		*08/12/2015 23:57*	WG808624

Semi Volatile Organic Compounds (GC/MS) by Method 8270C

Analyte	Result (dry) mg/kg	Qualifier	RDL (dry) mg/kg	Dilution	Analysis date / time	Batch
Acenaphthene	ND		1.86	50	08/13/2015 20:31	WG808662
Acenaphthylene	ND		1.86	50	08/13/2015 20:31	WG808662
Anthracene	ND		1.86	50	08/13/2015 20:31	WG808662
Benzidine	ND		18.7	50	08/13/2015 20:31	WG808662
Benzo(a)anthracene	ND		1.86	50	08/13/2015 20:31	WG808662
Benzo(b)fluoranthene	ND		1.86	50	08/13/2015 20:31	WG808662
Benzo(k)fluoranthene	ND		1.86	50	08/13/2015 20:31	WG808662
Benzo(g,h,i)perylene	ND		1.86	50	08/13/2015 20:31	WG808662
Benzo(a)pyrene	ND		1.86	50	08/13/2015 20:31	WG808662
Bis(2-chlorethoxy)methane	ND		18.7	50	08/13/2015 20:31	WG808662
Bis(2-chloroethyl)ether	ND		18.7	50	08/13/2015 20:31	WG808662
Bis(2-chloroisopropyl)ether	ND		18.7	50	08/13/2015 20:31	WG808662
4-Bromophenyl-phenylether	ND		18.7	50	08/13/2015 20:31	WG808662
2-Chloronaphthalene	ND		1.86	50	08/13/2015 20:31	WG808662
4-Chlorophenyl-phenylether	ND		18.7	50	08/13/2015 20:31	WG808662

Semi Volatile Organic Compounds (GC/MS) by Method 8270C

Analyte	Result (dry) mg/kg	Qualifier	RDL (dry) mg/kg	Dilution	Analysis date / time	Batch
Chrysene	ND		1.86	50	08/13/2015 20:31	WG808662
Dibenz(a,h)anthracene	ND		1.86	50	08/13/2015 20:31	WG808662
3,3-Dichlorobenzidine	ND		18.7	50	08/13/2015 20:31	WG808662
2,4-Dinitrotoluene	ND		18.7	50	08/13/2015 20:31	WG808662
2,6-Dinitrotoluene	ND		18.7	50	08/13/2015 20:31	WG808662
Fluoranthene	ND		1.86	50	08/13/2015 20:31	WG808662
Fluorene	ND		1.86	50	08/13/2015 20:31	WG808662
Hexachlorobenzene	ND		18.7	50	08/13/2015 20:31	WG808662
Hexachloro-1,3-butadiene	ND		18.7	50	08/13/2015 20:31	WG808662
Hexachlorocyclopentadiene	ND		18.7	50	08/13/2015 20:31	WG808662
Hexachloroethane	ND		18.7	50	08/13/2015 20:31	WG808662
Indeno(1,2,3-cd)pyrene	ND		1.86	50	08/13/2015 20:31	WG808662
Isophorone	ND		18.7	50	08/13/2015 20:31	WG808662
Naphthalene	ND		1.86	50	08/13/2015 20:31	WG808662
Nitrobenzene	ND		18.7	50	08/13/2015 20:31	WG808662
n-Nitrosodimethylamine	ND		18.7	50	08/13/2015 20:31	WG808662
n-Nitrosodiphenylamine	ND		18.7	50	08/13/2015 20:31	WG808662
n-Nitrosodi-n-propylamine	ND		18.7	50	08/13/2015 20:31	WG808662
Phenanthrene	ND		1.86	50	08/13/2015 20:31	WG808662
Benzylbutyl phthalate	ND		18.7	50	08/13/2015 20:31	WG808662
Bis(2-ethylhexyl)phthalate	ND		18.7	50	08/13/2015 20:31	WG808662
Di-n-butyl phthalate	ND		18.7	50	08/13/2015 20:31	WG808662
Diethyl phthalate	ND		18.7	50	08/13/2015 20:31	WG808662
Dimethyl phthalate	ND		18.7	50	08/13/2015 20:31	WG808662
Di-n-octyl phthalate	ND		18.7	50	08/13/2015 20:31	WG808662
Pyrene	ND		1.86	50	08/13/2015 20:31	WG808662
1,2,4-Trichlorobenzene	ND		18.7	50	08/13/2015 20:31	WG808662
4-Chloro-3-methylphenol	ND		18.7	50	08/13/2015 20:31	WG808662
2-Chlorophenol	ND		18.7	50	08/13/2015 20:31	WG808662
2,4-Dichlorophenol	ND		18.7	50	08/13/2015 20:31	WG808662
2,4-Dimethylphenol	ND		18.7	50	08/13/2015 20:31	WG808662
4,6-Dinitro-2-methylphenol	ND		18.7	50	08/13/2015 20:31	WG808662
2,4-Dinitrophenol	ND		18.7	50	08/13/2015 20:31	WG808662
2-Nitrophenol	ND		18.7	50	08/13/2015 20:31	WG808662
4-Nitrophenol	ND		18.7	50	08/13/2015 20:31	WG808662
Pentachlorophenol	ND		18.7	50	08/13/2015 20:31	WG808662
Phenol	ND		18.7	50	08/13/2015 20:31	WG808662
2,4,6-Trichlorophenol	ND		18.7	50	08/13/2015 20:31	WG808662
(S) 2-Fluorophenol	*81.4*	J7	*21.1-116*		*08/13/2015 20:31*	WG808662
(S) Phenol-d5	*110*	J7	*26.3-121*		*08/13/2015 20:31*	WG808662
(S) Nitrobenzene-d5	*77.5*	J7	*21.9-129*		*08/13/2015 20:31*	WG808662
(S) 2-Fluorobiphenyl	*83.3*	J7	*34.9-129*		*08/13/2015 20:31*	WG808662
(S) 2,4,6-Tribromophenol	*101*	J7	*21.6-142*		*08/13/2015 20:31*	WG808662
(S) p-Terphenyl-d14	*106*	J7	*21.5-128*		*08/13/2015 20:31*	WG808662

Sample Narrative:

8270C L782221-01 WG808662: Dilution due to matrix

Total Solids by Method 2540 G-2011

Analyte	Result %	Qualifier	Dilution	Analysis date / time	Batch
Total Solids	84.8		1	08/13/2015 07:07	WG808613

Volatile Organic Compounds (GC/MS) by Method 8260B

Analyte	Result (dry) mg/kg	Qualifier	RDL (dry) mg/kg	Dilution	Analysis date / time	Batch
Acetone	ND		29.5	500	08/13/2015 00:16	WG808624
Acrylonitrile	ND		5.90	500	08/13/2015 00:16	WG808624
Benzene	ND		0.590	500	08/13/2015 00:16	WG808624
Bromobenzene	ND		0.590	500	08/13/2015 00:16	WG808624
Bromodichloromethane	ND		0.590	500	08/13/2015 00:16	WG808624
Bromoform	ND		0.590	500	08/13/2015 00:16	WG808624
Bromomethane	ND		2.95	500	08/13/2015 00:16	WG808624
n-Butylbenzene	19.7		0.590	500	08/13/2015 00:16	WG808624
sec-Butylbenzene	4.55		0.590	500	08/13/2015 00:16	WG808624
tert-Butylbenzene	2.54		0.590	500	08/13/2015 00:16	WG808624
Carbon tetrachloride	ND		0.590	500	08/13/2015 00:16	WG808624
Chlorobenzene	ND		0.590	500	08/13/2015 00:16	WG808624
Chlorodibromomethane	ND		0.590	500	08/13/2015 00:16	WG808624
Chloroethane	ND		2.95	500	08/13/2015 00:16	WG808624
2-Chloroethyl vinyl ether	ND		29.5	500	08/13/2015 00:16	WG808624
Chloroform	ND		2.95	500	08/13/2015 00:16	WG808624
Chloromethane	ND		1.47	500	08/13/2015 00:16	WG808624
2-Chlorotoluene	ND		0.590	500	08/13/2015 00:16	WG808624
4-Chlorotoluene	ND		0.590	500	08/13/2015 00:16	WG808624
1,2-Dibromo-3-Chloropropane	ND		2.95	500	08/13/2015 00:16	WG808624
1,2-Dibromoethane	ND		0.590	500	08/13/2015 00:16	WG808624
Dibromomethane	ND		0.590	500	08/13/2015 00:16	WG808624
1,2-Dichlorobenzene	ND		0.590	500	08/13/2015 00:16	WG808624
1,3-Dichlorobenzene	ND		0.590	500	08/13/2015 00:16	WG808624
1,4-Dichlorobenzene	ND		0.590	500	08/13/2015 00:16	WG808624
Dichlorodifluoromethane	ND		2.95	500	08/13/2015 00:16	WG808624
1,1-Dichloroethane	ND		0.590	500	08/13/2015 00:16	WG808624
1,2-Dichloroethane	ND		0.590	500	08/13/2015 00:16	WG808624
1,1-Dichloroethene	ND		0.590	500	08/13/2015 00:16	WG808624
cis-1,2-Dichloroethene	ND		0.590	500	08/13/2015 00:16	WG808624
trans-1,2-Dichloroethene	ND		0.590	500	08/13/2015 00:16	WG808624
1,2-Dichloropropane	ND		0.590	500	08/13/2015 00:16	WG808624
1,1-Dichloropropene	ND		0.590	500	08/13/2015 00:16	WG808624
1,3-Dichloropropane	ND		0.590	500	08/13/2015 00:16	WG808624
cis-1,3-Dichloropropene	ND		0.590	500	08/13/2015 00:16	WG808624
trans-1,3-Dichloropropene	ND		0.590	500	08/13/2015 00:16	WG808624
2,2-Dichloropropane	ND		0.590	500	08/13/2015 00:16	WG808624
Dicyclopentadiene	487		5.90	5000	08/13/2015 23:13	WG809036
Di-isopropyl ether	ND		0.590	500	08/13/2015 00:16	WG808624
Ethylbenzene	37.8		0.590	500	08/13/2015 00:16	WG808624
Hexachloro-1,3-butadiene	ND		0.590	500	08/13/2015 00:16	WG808624
Isopropylbenzene	13.7		0.590	500	08/13/2015 00:16	WG808624
p-Isopropyltoluene	7.13		0.590	500	08/13/2015 00:16	WG808624
2-Butanone (MEK)	ND		5.90	500	08/13/2015 00:16	WG808624
Methylene Chloride	ND		2.95	500	08/13/2015 00:16	WG808624
4-Methyl-2-pentanone (MIBK)	ND		5.90	500	08/13/2015 00:16	WG808624
Methyl tert-butyl ether	ND		0.590	500	08/13/2015 00:16	WG808624
Naphthalene	446		29.5	5000	08/13/2015 23:13	WG809036
n-Propylbenzene	99.2		0.590	500	08/13/2015 00:16	WG808624
Styrene	13.2		0.590	500	08/13/2015 00:16	WG808624

Volatile Organic Compounds (GC/MS) by Method 8260B

Analyte	Result (dry) mg/kg	Qualifier	RDL (dry) mg/kg	Dilution	Analysis date / time	Batch
1,1,1,2-Tetrachloroethane	ND		0.590	500	08/13/2015 00:16	WG808624
1,1,2,2-Tetrachloroethane	ND		0.590	500	08/13/2015 00:16	WG808624
1,1,2-Trichlorotrifluoroethane	ND		0.590	500	08/13/2015 00:16	WG808624
Tetrachloroethene	ND		0.590	500	08/13/2015 00:16	WG808624
Toluene	ND		2.95	500	08/13/2015 00:16	WG808624
1,2,3-Trichlorobenzene	ND		0.590	500	08/13/2015 00:16	WG808624
1,2,4-Trichlorobenzene	ND		0.590	500	08/13/2015 00:16	WG808624
1,1,1-Trichloroethane	ND		0.590	500	08/13/2015 00:16	WG808624
1,1,2-Trichloroethane	ND		0.590	500	08/13/2015 00:16	WG808624
Trichloroethene	ND		0.590	500	08/13/2015 00:16	WG808624
Trichlorofluoromethane	ND		2.95	500	08/13/2015 00:16	WG808624
1,2,3-Trichloropropane	ND		1.47	500	08/13/2015 00:16	WG808624
1,2,4-Trimethylbenzene	684		5.90	5000	08/13/2015 23:13	WG809036
1,2,3-Trimethylbenzene	259		5.90	5000	08/13/2015 23:13	WG809036
1,3,5-Trimethylbenzene	252		5.90	5000	08/13/2015 23:13	WG809036
Vinyl chloride	ND		0.590	500	08/13/2015 00:16	WG808624
Xylenes, Total	289		17.7	5000	08/13/2015 23:13	WG809036
(S) Toluene-d8	*103*		*88.7-115*		*08/13/2015 00:16*	WG808624
(S) Dibromofluoromethane	*91.6*		*76.3-123*		*08/13/2015 00:16*	WG808624
(S) 4-Bromofluorobenzene	*109*		*69.7-129*		*08/13/2015 00:16*	WG808624

Semi Volatile Organic Compounds (GC/MS) by Method 8270C

Analyte	Result (dry) mg/kg	Qualifier	RDL (dry) mg/kg	Dilution	Analysis date / time	Batch
Acenaphthene	ND		0.195	5	08/13/2015 16:17	WG808662
Acenaphthylene	ND		0.195	5	08/13/2015 16:17	WG808662
Anthracene	ND		0.195	5	08/13/2015 16:17	WG808662
Benzidine	ND		1.96	5	08/13/2015 16:17	WG808662
Benzo(a)anthracene	ND		0.195	5	08/13/2015 16:17	WG808662
Benzo(b)fluoranthene	ND		0.195	5	08/13/2015 16:17	WG808662
Benzo(k)fluoranthene	ND		0.195	5	08/13/2015 16:17	WG808662
Benzo(g,h,i)perylene	ND		0.195	5	08/13/2015 16:17	WG808662
Benzo(a)pyrene	ND		0.195	5	08/13/2015 16:17	WG808662
Bis(2-chlorethoxy)methane	ND		1.96	5	08/13/2015 16:17	WG808662
Bis(2-chloroethyl)ether	ND		1.96	5	08/13/2015 16:17	WG808662
Bis(2-chloroisopropyl)ether	ND		1.96	5	08/13/2015 16:17	WG808662
4-Bromophenyl-phenylether	ND		1.96	5	08/13/2015 16:17	WG808662
2-Chloronaphthalene	ND		0.195	5	08/13/2015 16:17	WG808662
4-Chlorophenyl-phenylether	ND		1.96	5	08/13/2015 16:17	WG808662
Chrysene	ND		0.195	5	08/13/2015 16:17	WG808662
Dibenz(a,h)anthracene	ND		0.195	5	08/13/2015 16:17	WG808662
3,3-Dichlorobenzidine	ND		1.96	5	08/13/2015 16:17	WG808662
2,4-Dinitrotoluene	ND		1.96	5	08/13/2015 16:17	WG808662
2,6-Dinitrotoluene	ND		1.96	5	08/13/2015 16:17	WG808662
Fluoranthene	ND		0.195	5	08/13/2015 16:17	WG808662
Fluorene	ND		0.195	5	08/13/2015 16:17	WG808662
Hexachlorobenzene	ND		1.96	5	08/13/2015 16:17	WG808662
Hexachloro-1,3-butadiene	ND		1.96	5	08/13/2015 16:17	WG808662
Hexachlorocyclopentadiene	ND		1.96	5	08/13/2015 16:17	WG808662
Hexachloroethane	ND		1.96	5	08/13/2015 16:17	WG808662
Indeno(1,2,3-cd)pyrene	ND		0.195	5	08/13/2015 16:17	WG808662
Isophorone	ND		1.96	5	08/13/2015 16:17	WG808662
Naphthalene	85.0		1.95	50	08/14/2015 09:17	WG808662
Nitrobenzene	ND		1.96	5	08/13/2015 16:17	WG808662
n-Nitrosodimethylamine	ND		1.96	5	08/13/2015 16:17	WG808662
n-Nitrosodiphenylamine	ND		1.96	5	08/13/2015 16:17	WG808662

Semi Volatile Organic Compounds (GC/MS) by Method 8270C

Analyte	Result (dry) mg/kg	Qualifier	RDL (dry) mg/kg	Dilution	Analysis date / time	Batch
n-Nitrosodi-n-propylamine	ND		1.96	5	08/13/2015 16:17	WG808662
Phenanthrene	ND		0.195	5	08/13/2015 16:17	WG808662
Benzylbutyl phthalate	ND		1.96	5	08/13/2015 16:17	WG808662
Bis(2-ethylhexyl)phthalate	ND		1.96	5	08/13/2015 16:17	WG808662
Di-n-butyl phthalate	ND		1.96	5	08/13/2015 16:17	WG808662
Diethyl phthalate	ND		1.96	5	08/13/2015 16:17	WG808662
Dimethyl phthalate	ND		1.96	5	08/13/2015 16:17	WG808662
Di-n-octyl phthalate	ND		1.96	5	08/13/2015 16:17	WG808662
Pyrene	ND		0.195	5	08/13/2015 16:17	WG808662
1,2,4-Trichlorobenzene	ND		1.96	5	08/13/2015 16:17	WG808662
4-Chloro-3-methylphenol	ND		1.96	5	08/13/2015 16:17	WG808662
2-Chlorophenol	ND		1.96	5	08/13/2015 16:17	WG808662
2,4-Dichlorophenol	ND		1.96	5	08/13/2015 16:17	WG808662
2,4-Dimethylphenol	ND		1.96	5	08/13/2015 16:17	WG808662
4,6-Dinitro-2-methylphenol	ND		1.96	5	08/13/2015 16:17	WG808662
2,4-Dinitrophenol	ND		1.96	5	08/13/2015 16:17	WG808662
2-Nitrophenol	ND		1.96	5	08/13/2015 16:17	WG808662
4-Nitrophenol	ND		1.96	5	08/13/2015 16:17	WG808662
Pentachlorophenol	ND		1.96	5	08/13/2015 16:17	WG808662
Phenol	ND		1.96	5	08/13/2015 16:17	WG808662
2,4,6-Trichlorophenol	ND		1.96	5	08/13/2015 16:17	WG808662
(S) 2-Fluorophenol	*72.1*		*21.1-116*		*08/13/2015 16:17*	WG808662
(S) Phenol-d5	*93.6*		*26.3-121*		*08/13/2015 16:17*	WG808662
(S) Nitrobenzene-d5	*120*		*21.9-129*		*08/13/2015 16:17*	WG808662
(S) 2-Fluorobiphenyl	*66.0*		*34.9-129*		*08/13/2015 16:17*	WG808662
(S) 2,4,6-Tribromophenol	*84.7*		*21.6-142*		*08/13/2015 16:17*	WG808662
(S) p-Terphenyl-d14	*68.5*		*21.5-128*		*08/13/2015 16:17*	WG808662

Sample Narrative:

8270C L782221-02 WG808662: Dilution due to matrix

Total Solids by Method 2540 G-2011

Analyte	Result %	Qualifier	Dilution	Analysis date / time	Batch
Total Solids	93.2		1	08/13/2015 07:08	WG808613

Mercury by Method 7471A

Analyte	Result (dry) mg/kg	Qualifier	RDL (dry) mg/kg	Dilution	Analysis date / time	Batch
Mercury	ND		0.0215	1	08/13/2015 12:34	WG808666

Metals (ICP) by Method 6010B

Analyte	Result (dry) mg/kg	Qualifier	RDL (dry) mg/kg	Dilution	Analysis date / time	Batch
Arsenic	ND		2.15	1	08/13/2015 04:30	WG808635
Barium	13.3		0.536	1	08/13/2015 04:30	WG808635
Cadmium	ND		0.536	1	08/13/2015 04:30	WG808635
Chromium	3.53		1.07	1	08/13/2015 04:30	WG808635
Lead	5.04		0.536	1	08/13/2015 04:30	WG808635
Selenium	ND		2.15	1	08/13/2015 04:30	WG808635
Silver	ND		1.07	1	08/13/2015 04:30	WG808635

Volatile Organic Compounds (GC/MS) by Method 8260B

Analyte	Result (dry) mg/kg	Qualifier	RDL (dry) mg/kg	Dilution	Analysis date / time	Batch
Acetone	ND		1.34	25	08/13/2015 23:32	WG809036
Acrylonitrile	ND		0.268	25	08/13/2015 23:32	WG809036
Benzene	ND		0.0268	25	08/13/2015 23:32	WG809036
Bromobenzene	ND		0.0268	25	08/13/2015 23:32	WG809036
Bromodichloromethane	ND		0.0268	25	08/13/2015 23:32	WG809036
Bromoform	ND		0.0268	25	08/13/2015 23:32	WG809036
Bromomethane	ND		0.134	25	08/13/2015 23:32	WG809036
n-Butylbenzene	ND		0.0268	25	08/13/2015 23:32	WG809036
sec-Butylbenzene	ND		0.0268	25	08/13/2015 23:32	WG809036
tert-Butylbenzene	ND		0.0268	25	08/13/2015 23:32	WG809036
Carbon tetrachloride	ND		0.0268	25	08/13/2015 23:32	WG809036
Chlorobenzene	ND		0.0268	25	08/13/2015 23:32	WG809036
Chlorodibromomethane	ND		0.0268	25	08/13/2015 23:32	WG809036
Chloroethane	ND		0.134	25	08/13/2015 23:32	WG809036
2-Chloroethyl vinyl ether	ND		1.34	25	08/13/2015 23:32	WG809036
Chloroform	ND		0.134	25	08/13/2015 23:32	WG809036
Chloromethane	ND		0.0671	25	08/13/2015 23:32	WG809036
2-Chlorotoluene	ND		0.0268	25	08/13/2015 23:32	WG809036
4-Chlorotoluene	ND		0.0268	25	08/13/2015 23:32	WG809036
1,2-Dibromo-3-Chloropropane	ND		0.134	25	08/13/2015 23:32	WG809036
1,2-Dibromoethane	ND		0.0268	25	08/13/2015 23:32	WG809036
Dibromomethane	ND		0.0268	25	08/13/2015 23:32	WG809036
1,2-Dichlorobenzene	ND		0.0268	25	08/13/2015 23:32	WG809036
1,3-Dichlorobenzene	ND		0.0268	25	08/13/2015 23:32	WG809036
1,4-Dichlorobenzene	ND		0.0268	25	08/13/2015 23:32	WG809036
Dichlorodifluoromethane	ND		0.134	25	08/13/2015 23:32	WG809036
1,1-Dichloroethane	ND		0.0268	25	08/13/2015 23:32	WG809036
1,2-Dichloroethane	ND		0.0268	25	08/13/2015 23:32	WG809036
1,1-Dichloroethene	ND		0.0268	25	08/13/2015 23:32	WG809036
cis-1,2-Dichloroethene	ND		0.0268	25	08/13/2015 23:32	WG809036
trans-1,2-Dichloroethene	ND		0.0268	25	08/13/2015 23:32	WG809036
1,2-Dichloropropane	ND		0.0268	25	08/13/2015 23:32	WG809036
1,1-Dichloropropene	ND		0.0268	25	08/13/2015 23:32	WG809036

Volatile Organic Compounds (GC/MS) by Method 8260B

Analyte	Result (dry) mg/kg	Qualifier	RDL (dry) mg/kg	Dilution	Analysis date / time	Batch
1,3-Dichloropropane	ND		0.0268	25	08/13/2015 23:32	WG809036
cis-1,3-Dichloropropene	ND		0.0268	25	08/13/2015 23:32	WG809036
trans-1,3-Dichloropropene	ND		0.0268	25	08/13/2015 23:32	WG809036
2,2-Dichloropropane	ND		0.0268	25	08/13/2015 23:32	WG809036
Dicyclopentadiene	1.29		0.0268	25	08/13/2015 23:32	WG809036
Di-isopropyl ether	ND		0.0268	25	08/13/2015 23:32	WG809036
Ethylbenzene	ND		0.0268	25	08/13/2015 23:32	WG809036
Hexachloro-1,3-butadiene	ND		0.0268	25	08/13/2015 23:32	WG809036
Isopropylbenzene	ND		0.0268	25	08/13/2015 23:32	WG809036
p-Isopropyltoluene	ND		0.0268	25	08/13/2015 23:32	WG809036
2-Butanone (MEK)	0.414		0.268	25	08/13/2015 23:32	WG809036
Methylene Chloride	ND		0.134	25	08/13/2015 23:32	WG809036
4-Methyl-2-pentanone (MIBK)	ND		0.268	25	08/13/2015 23:32	WG809036
Methyl tert-butyl ether	ND		0.0268	25	08/13/2015 23:32	WG809036
Naphthalene	0.272		0.134	25	08/13/2015 23:32	WG809036
n-Propylbenzene	0.0440		0.0268	25	08/13/2015 23:32	WG809036
Styrene	ND		0.0268	25	08/13/2015 23:32	WG809036
1,1,1,2-Tetrachloroethane	ND		0.0268	25	08/13/2015 23:32	WG809036
1,1,2,2-Tetrachloroethane	ND		0.0268	25	08/13/2015 23:32	WG809036
1,1,2-Trichlorotrifluoroethane	ND		0.0268	25	08/13/2015 23:32	WG809036
Tetrachloroethene	ND		0.0268	25	08/13/2015 23:32	WG809036
Toluene	ND		0.134	25	08/13/2015 23:32	WG809036
1,2,3-Trichlorobenzene	ND		0.0268	25	08/13/2015 23:32	WG809036
1,2,4-Trichlorobenzene	ND		0.0268	25	08/13/2015 23:32	WG809036
1,1,1-Trichloroethane	ND		0.0268	25	08/13/2015 23:32	WG809036
1,1,2-Trichloroethane	ND		0.0268	25	08/13/2015 23:32	WG809036
Trichloroethene	ND		0.0268	25	08/13/2015 23:32	WG809036
Trichlorofluoromethane	ND		0.134	25	08/13/2015 23:32	WG809036
1,2,3-Trichloropropane	ND		0.0671	25	08/13/2015 23:32	WG809036
1,2,4-Trimethylbenzene	0.409		0.0268	25	08/13/2015 23:32	WG809036
1,2,3-Trimethylbenzene	0.233		0.0268	25	08/13/2015 23:32	WG809036
1,3,5-Trimethylbenzene	0.233		0.0268	25	08/13/2015 23:32	WG809036
Vinyl chloride	ND		0.0268	25	08/13/2015 23:32	WG809036
Xylenes, Total	0.0988		0.0805	25	08/13/2015 23:32	WG809036
(S) Toluene-d8	*102*		*88.7-115*		*08/13/2015 23:32*	WG809036
(S) Dibromofluoromethane	*88.4*		*76.3-123*		*08/13/2015 23:32*	WG809036
(S) 4-Bromofluorobenzene	*106*		*69.7-129*		*08/13/2015 23:32*	WG809036

Sample Narrative:

8260B L782221-03 WG809036: Non-target compounds too high to run at a lower dilution.

Semi Volatile Organic Compounds (GC/MS) by Method 8270C

Analyte	Result (dry) mg/kg	Qualifier	RDL (dry) mg/kg	Dilution	Analysis date / time	Batch
Acenaphthene	ND		0.177	5	08/13/2015 19:45	WG808662
Acenaphthylene	ND		0.177	5	08/13/2015 19:45	WG808662
Anthracene	ND		0.177	5	08/13/2015 19:45	WG808662
Benzidine	ND		1.79	5	08/13/2015 19:45	WG808662
Benzo(a)anthracene	ND		0.177	5	08/13/2015 19:45	WG808662
Benzo(b)fluoranthene	ND		0.885	25	08/14/2015 12:24	WG808662
Benzo(k)fluoranthene	ND		0.885	25	08/14/2015 12:24	WG808662
Benzo(g,h,i)perylene	ND		0.885	25	08/14/2015 12:24	WG808662
Benzo(a)pyrene	ND		0.885	25	08/14/2015 12:24	WG808662
Bis(2-chlorethoxy)methane	ND		1.79	5	08/13/2015 19:45	WG808662
Bis(2-chloroethyl)ether	ND		1.79	5	08/13/2015 19:45	WG808662
Bis(2-chloroisopropyl)ether	ND		1.79	5	08/13/2015 19:45	WG808662

Semi Volatile Organic Compounds (GC/MS) by Method 8270C

Analyte	Result (dry) mg/kg	Qualifier	RDL (dry) mg/kg	Dilution	Analysis date / time	Batch
4-Bromophenyl-phenylether	ND		1.79	5	08/13/2015 19:45	WG808662
2-Chloronaphthalene	ND		0.177	5	08/13/2015 19:45	WG808662
4-Chlorophenyl-phenylether	ND		1.79	5	08/13/2015 19:45	WG808662
Chrysene	ND		0.177	5	08/13/2015 19:45	WG808662
Dibenz(a,h)anthracene	ND		0.885	25	08/14/2015 12:24	WG808662
3,3-Dichlorobenzidine	ND		1.79	5	08/13/2015 19:45	WG808662
2,4-Dinitrotoluene	ND		1.79	5	08/13/2015 19:45	WG808662
2,6-Dinitrotoluene	ND		1.79	5	08/13/2015 19:45	WG808662
Fluoranthene	ND		0.177	5	08/13/2015 19:45	WG808662
Fluorene	ND		0.177	5	08/13/2015 19:45	WG808662
Hexachlorobenzene	ND		1.79	5	08/13/2015 19:45	WG808662
Hexachloro-1,3-butadiene	ND		1.79	5	08/13/2015 19:45	WG808662
Hexachlorocyclopentadiene	ND		1.79	5	08/13/2015 19:45	WG808662
Hexachloroethane	ND		1.79	5	08/13/2015 19:45	WG808662
Indeno(1,2,3-cd)pyrene	ND		0.885	25	08/14/2015 12:24	WG808662
Isophorone	ND		1.79	5	08/13/2015 19:45	WG808662
Naphthalene	ND		0.177	5	08/13/2015 19:45	WG808662
Nitrobenzene	ND		1.79	5	08/13/2015 19:45	WG808662
n-Nitrosodimethylamine	ND		1.79	5	08/13/2015 19:45	WG808662
n-Nitrosodiphenylamine	ND		1.79	5	08/13/2015 19:45	WG808662
n-Nitrosodi-n-propylamine	ND		1.79	5	08/13/2015 19:45	WG808662
Phenanthrene	ND		0.177	5	08/13/2015 19:45	WG808662
Benzylbutyl phthalate	ND		1.79	5	08/13/2015 19:45	WG808662
Bis(2-ethylhexyl)phthalate	ND		1.79	5	08/13/2015 19:45	WG808662
Di-n-butyl phthalate	ND		1.79	5	08/13/2015 19:45	WG808662
Diethyl phthalate	ND		1.79	5	08/13/2015 19:45	WG808662
Dimethyl phthalate	ND		1.79	5	08/13/2015 19:45	WG808662
Di-n-octyl phthalate	ND		1.79	5	08/13/2015 19:45	WG808662
Pyrene	ND		0.177	5	08/13/2015 19:45	WG808662
1,2,4-Trichlorobenzene	ND		1.79	5	08/13/2015 19:45	WG808662
4-Chloro-3-methylphenol	ND		1.79	5	08/13/2015 19:45	WG808662
2-Chlorophenol	ND		1.79	5	08/13/2015 19:45	WG808662
2,4-Dichlorophenol	ND		1.79	5	08/13/2015 19:45	WG808662
2,4-Dimethylphenol	ND		1.79	5	08/13/2015 19:45	WG808662
4,6-Dinitro-2-methylphenol	ND		1.79	5	08/13/2015 19:45	WG808662
2,4-Dinitrophenol	ND		1.79	5	08/13/2015 19:45	WG808662
2-Nitrophenol	ND		1.79	5	08/13/2015 19:45	WG808662
4-Nitrophenol	ND		1.79	5	08/13/2015 19:45	WG808662
Pentachlorophenol	ND		1.79	5	08/13/2015 19:45	WG808662
Phenol	ND		1.79	5	08/13/2015 19:45	WG808662
2,4,6-Trichlorophenol	ND		1.79	5	08/13/2015 19:45	WG808662
(S) 2-Fluorophenol	*68.9*		*21.1-116*		*08/13/2015 19:45*	WG808662
(S) Phenol-d5	*83.8*		*26.3-121*		*08/13/2015 19:45*	WG808662
(S) Nitrobenzene-d5	*76.6*		*21.9-129*		*08/13/2015 19:45*	WG808662
(S) 2-Fluorobiphenyl	*67.4*		*34.9-129*		*08/13/2015 19:45*	WG808662
(S) 2,4,6-Tribromophenol	*82.2*		*21.6-142*		*08/13/2015 19:45*	WG808662
(S) p-Terphenyl-d14	*95.6*		*21.5-128*		*08/13/2015 19:45*	WG808662

Sample Narrative:

8270C L782221-03 WG808662: Dilution due to matrix

Total Solids by Method 2540 G-2011

Analyte	Result %	Qualifier	Dilution	Analysis date / time	Batch
Total Solids	86.0		1	08/13/2015 07:08	WG808613

Volatile Organic Compounds (GC/MS) by Method 8260B

Analyte	Result (dry) mg/kg	Qualifier	RDL (dry) mg/kg	Dilution	Analysis date / time	Batch
Acetone	ND		1.45	25	08/13/2015 00:56	WG808624
Acrylonitrile	ND		0.291	25	08/13/2015 00:56	WG808624
Benzene	ND		0.0291	25	08/13/2015 00:56	WG808624
Bromobenzene	ND		0.0291	25	08/13/2015 00:56	WG808624
Bromodichloromethane	ND		0.0291	25	08/13/2015 00:56	WG808624
Bromoform	ND		0.0291	25	08/13/2015 00:56	WG808624
Bromomethane	ND		0.145	25	08/13/2015 00:56	WG808624
n-Butylbenzene	0.0460		0.0291	25	08/13/2015 00:56	WG808624
sec-Butylbenzene	ND		0.0291	25	08/13/2015 00:56	WG808624
tert-Butylbenzene	ND		0.0291	25	08/13/2015 00:56	WG808624
Carbon tetrachloride	ND		0.0291	25	08/13/2015 00:56	WG808624
Chlorobenzene	ND		0.0291	25	08/13/2015 00:56	WG808624
Chlorodibromomethane	ND		0.0291	25	08/13/2015 00:56	WG808624
Chloroethane	ND		0.145	25	08/13/2015 00:56	WG808624
2-Chloroethyl vinyl ether	ND		1.45	25	08/13/2015 00:56	WG808624
Chloroform	ND		0.145	25	08/13/2015 00:56	WG808624
Chloromethane	ND		0.0727	25	08/13/2015 00:56	WG808624
2-Chlorotoluene	ND		0.0291	25	08/13/2015 00:56	WG808624
4-Chlorotoluene	ND		0.0291	25	08/13/2015 00:56	WG808624
1,2-Dibromo-3-Chloropropane	ND		0.145	25	08/13/2015 00:56	WG808624
1,2-Dibromoethane	ND		0.0291	25	08/13/2015 00:56	WG808624
Dibromomethane	ND		0.0291	25	08/13/2015 00:56	WG808624
1,2-Dichlorobenzene	ND		0.0291	25	08/13/2015 00:56	WG808624
1,3-Dichlorobenzene	ND		0.0291	25	08/13/2015 00:56	WG808624
1,4-Dichlorobenzene	ND		0.0291	25	08/13/2015 00:56	WG808624
Dichlorodifluoromethane	ND		0.145	25	08/13/2015 00:56	WG808624
1,1-Dichloroethane	ND		0.0291	25	08/13/2015 00:56	WG808624
1,2-Dichloroethane	ND		0.0291	25	08/13/2015 00:56	WG808624
1,1-Dichloroethene	ND		0.0291	25	08/13/2015 00:56	WG808624
cis-1,2-Dichloroethene	ND		0.0291	25	08/13/2015 00:56	WG808624
trans-1,2-Dichloroethene	ND		0.0291	25	08/13/2015 00:56	WG808624
1,2-Dichloropropane	ND		0.0291	25	08/13/2015 00:56	WG808624
1,1-Dichloropropene	ND		0.0291	25	08/13/2015 00:56	WG808624
1,3-Dichloropropane	ND		0.0291	25	08/13/2015 00:56	WG808624
cis-1,3-Dichloropropene	ND		0.0291	25	08/13/2015 00:56	WG808624
trans-1,3-Dichloropropene	ND		0.0291	25	08/13/2015 00:56	WG808624
2,2-Dichloropropane	ND		0.0291	25	08/13/2015 00:56	WG808624
Dicyclopentadiene	0.308		0.0291	25	08/13/2015 00:56	WG808624
Di-isopropyl ether	ND		0.0291	25	08/13/2015 00:56	WG808624
Ethylbenzene	ND		0.0291	25	08/13/2015 00:56	WG808624
Hexachloro-1,3-butadiene	ND		0.0291	25	08/13/2015 00:56	WG808624
Isopropylbenzene	ND		0.0291	25	08/13/2015 00:56	WG808624
p-Isopropyltoluene	0.0361		0.0291	25	08/13/2015 00:56	WG808624
2-Butanone (MEK)	ND		0.291	25	08/13/2015 00:56	WG808624
Methylene Chloride	ND		0.145	25	08/13/2015 00:56	WG808624
4-Methyl-2-pentanone (MIBK)	ND		0.291	25	08/13/2015 00:56	WG808624
Methyl tert-butyl ether	ND		0.0291	25	08/13/2015 00:56	WG808624
Naphthalene	0.334		0.145	25	08/13/2015 00:56	WG808624
n-Propylbenzene	0.117		0.0291	25	08/13/2015 00:56	WG808624
Styrene	ND		0.0291	25	08/13/2015 00:56	WG808624

Volatile Organic Compounds (GC/MS) by Method 8260B

Analyte	Result (dry) mg/kg	Qualifier	RDL (dry) mg/kg	Dilution	Analysis date / time	Batch
1,1,1,2-Tetrachloroethane	ND		0.0291	25	08/13/2015 00:56	WG808624
1,1,2,2-Tetrachloroethane	ND		0.0291	25	08/13/2015 00:56	WG808624
1,1,2-Trichlorotrifluoroethane	ND		0.0291	25	08/13/2015 00:56	WG808624
Tetrachloroethene	ND		0.0291	25	08/13/2015 00:56	WG808624
Toluene	ND		0.145	25	08/13/2015 00:56	WG808624
1,2,3-Trichlorobenzene	ND		0.0291	25	08/13/2015 00:56	WG808624
1,2,4-Trichlorobenzene	ND		0.0291	25	08/13/2015 00:56	WG808624
1,1,1-Trichloroethane	ND		0.0291	25	08/13/2015 00:56	WG808624
1,1,2-Trichloroethane	ND		0.0291	25	08/13/2015 00:56	WG808624
Trichloroethene	ND		0.0291	25	08/13/2015 00:56	WG808624
Trichlorofluoromethane	ND		0.145	25	08/13/2015 00:56	WG808624
1,2,3-Trichloropropane	ND		0.0727	25	08/13/2015 00:56	WG808624
1,2,4-Trimethylbenzene	1.20		0.0291	25	08/13/2015 00:56	WG808624
1,2,3-Trimethylbenzene	0.469		0.0291	25	08/13/2015 00:56	WG808624
1,3,5-Trimethylbenzene	0.529		0.0291	25	08/13/2015 00:56	WG808624
Vinyl chloride	ND		0.0291	25	08/13/2015 00:56	WG808624
Xylenes, Total	0.111		0.0872	25	08/13/2015 00:56	WG808624
(S) Toluene-d8	*103*		*88.7-115*		*08/13/2015 00:56*	WG808624
(S) Dibromofluoromethane	*86.5*		*76.3-123*		*08/13/2015 00:56*	WG808624
(S) 4-Bromofluorobenzene	*106*		*69.7-129*		*08/13/2015 00:56*	WG808624

Semi Volatile Organic Compounds (GC/MS) by Method 8270C

Analyte	Result (dry) mg/kg	Qualifier	RDL (dry) mg/kg	Dilution	Analysis date / time	Batch
Acenaphthene	ND		0.0384	1	08/13/2015 12:23	WG808662
Acenaphthylene	ND		0.0384	1	08/13/2015 12:23	WG808662
Anthracene	ND		0.0384	1	08/13/2015 12:23	WG808662
Benzidine	ND		0.387	1	08/13/2015 12:23	WG808662
Benzo(a)anthracene	ND		0.0384	1	08/13/2015 12:23	WG808662
Benzo(b)fluoranthene	ND		0.0384	1	08/13/2015 12:23	WG808662
Benzo(k)fluoranthene	ND		0.0384	1	08/13/2015 12:23	WG808662
Benzo(g,h,i)perylene	ND		0.0384	1	08/13/2015 12:23	WG808662
Benzo(a)pyrene	ND		0.0384	1	08/13/2015 12:23	WG808662
Bis(2-chlorethoxy)methane	ND		0.387	1	08/13/2015 12:23	WG808662
Bis(2-chloroethyl)ether	ND		0.387	1	08/13/2015 12:23	WG808662
Bis(2-chloroisopropyl)ether	ND		0.387	1	08/13/2015 12:23	WG808662
4-Bromophenyl-phenylether	ND		0.387	1	08/13/2015 12:23	WG808662
2-Chloronaphthalene	ND		0.0384	1	08/13/2015 12:23	WG808662
4-Chlorophenyl-phenylether	ND		0.387	1	08/13/2015 12:23	WG808662
Chrysene	ND		0.0384	1	08/13/2015 12:23	WG808662
Dibenz(a,h)anthracene	ND		0.0384	1	08/13/2015 12:23	WG808662
3,3-Dichlorobenzidine	ND		0.387	1	08/13/2015 12:23	WG808662
2,4-Dinitrotoluene	ND		0.387	1	08/13/2015 12:23	WG808662
2,6-Dinitrotoluene	ND		0.387	1	08/13/2015 12:23	WG808662
Fluoranthene	ND		0.0384	1	08/13/2015 12:23	WG808662
Fluorene	ND		0.0384	1	08/13/2015 12:23	WG808662
Hexachlorobenzene	ND		0.387	1	08/13/2015 12:23	WG808662
Hexachloro-1,3-butadiene	ND		0.387	1	08/13/2015 12:23	WG808662
Hexachlorocyclopentadiene	ND		0.387	1	08/13/2015 12:23	WG808662
Hexachloroethane	ND		0.387	1	08/13/2015 12:23	WG808662
Indeno(1,2,3-cd)pyrene	ND		0.0384	1	08/13/2015 12:23	WG808662
Isophorone	ND		0.387	1	08/13/2015 12:23	WG808662
Naphthalene	0.268		0.0384	1	08/13/2015 12:23	WG808662
Nitrobenzene	ND		0.387	1	08/13/2015 12:23	WG808662
n-Nitrosodimethylamine	ND		0.387	1	08/13/2015 12:23	WG808662
n-Nitrosodiphenylamine	ND		0.387	1	08/13/2015 12:23	WG808662

Semi Volatile Organic Compounds (GC/MS) by Method 8270C

Analyte	Result (dry) mg/kg	Qualifier	RDL (dry) mg/kg	Dilution	Analysis date / time	Batch
n-Nitrosodi-n-propylamine	ND		0.387	1	08/13/2015 12:23	WG808662
Phenanthrene	ND		0.0384	1	08/13/2015 12:23	WG808662
Benzylbutyl phthalate	ND		0.387	1	08/13/2015 12:23	WG808662
Bis(2-ethylhexyl)phthalate	ND		0.387	1	08/13/2015 12:23	WG808662
Di-n-butyl phthalate	ND		0.387	1	08/13/2015 12:23	WG808662
Diethyl phthalate	ND		0.387	1	08/13/2015 12:23	WG808662
Dimethyl phthalate	ND		0.387	1	08/13/2015 12:23	WG808662
Di-n-octyl phthalate	ND		0.387	1	08/13/2015 12:23	WG808662
Pyrene	ND		0.0384	1	08/13/2015 12:23	WG808662
1,2,4-Trichlorobenzene	ND		0.387	1	08/13/2015 12:23	WG808662
4-Chloro-3-methylphenol	ND		0.387	1	08/13/2015 12:23	WG808662
2-Chlorophenol	ND		0.387	1	08/13/2015 12:23	WG808662
2,4-Dichlorophenol	ND		0.387	1	08/13/2015 12:23	WG808662
2,4-Dimethylphenol	ND		0.387	1	08/13/2015 12:23	WG808662
4,6-Dinitro-2-methylphenol	ND		0.387	1	08/13/2015 12:23	WG808662
2,4-Dinitrophenol	ND		0.387	1	08/13/2015 12:23	WG808662
2-Nitrophenol	ND		0.387	1	08/13/2015 12:23	WG808662
4-Nitrophenol	ND		0.387	1	08/13/2015 12:23	WG808662
Pentachlorophenol	ND		0.387	1	08/13/2015 12:23	WG808662
Phenol	ND		0.387	1	08/13/2015 12:23	WG808662
2,4,6-Trichlorophenol	ND		0.387	1	08/13/2015 12:23	WG808662
(S) 2-Fluorophenol	*78.0*		*21.1-116*		*08/13/2015 12:23*	WG808662
(S) Phenol-d5	*82.4*		*26.3-121*		*08/13/2015 12:23*	WG808662
(S) Nitrobenzene-d5	*78.6*		*21.9-129*		*08/13/2015 12:23*	WG808662
(S) 2-Fluorobiphenyl	*76.1*		*34.9-129*		*08/13/2015 12:23*	WG808662
(S) 2,4,6-Tribromophenol	*98.2*		*21.6-142*		*08/13/2015 12:23*	WG808662
(S) p-Terphenyl-d14	*65.4*		*21.5-128*		*08/13/2015 12:23*	WG808662

Total Solids by Method 2540 G-2011

Analyte	Result %	Qualifier	Dilution	Analysis date / time	Batch
Total Solids	87.4		1	08/13/2015 07:08	WG808613

Mercury by Method 7471A

Analyte	Result (dry) mg/kg	Qualifier	RDL (dry) mg/kg	Dilution	Analysis date / time	Batch
Mercury	0.0258		0.0229	1	08/13/2015 12:37	WG808666

Metals (ICP) by Method 6010B

Analyte	Result (dry) mg/kg	Qualifier	RDL (dry) mg/kg	Dilution	Analysis date / time	Batch
Arsenic	ND		2.29	1	08/13/2015 04:38	WG808635
Barium	39.2		0.572	1	08/13/2015 04:38	WG808635
Cadmium	ND		0.572	1	08/13/2015 04:38	WG808635
Chromium	8.99		1.14	1	08/13/2015 04:38	WG808635
Lead	5.77		0.572	1	08/13/2015 04:38	WG808635
Selenium	ND		2.29	1	08/13/2015 04:38	WG808635
Silver	ND		1.14	1	08/13/2015 04:38	WG808635

Volatile Organic Compounds (GC/MS) by Method 8260B

Analyte	Result (dry) mg/kg	Qualifier	RDL (dry) mg/kg	Dilution	Analysis date / time	Batch
Acetone	ND		1.43	25	08/13/2015 01:15	WG808624
Acrylonitrile	ND		0.286	25	08/13/2015 01:15	WG808624
Benzene	ND		0.0286	25	08/13/2015 01:15	WG808624
Bromobenzene	ND		0.0286	25	08/13/2015 01:15	WG808624
Bromodichloromethane	ND		0.0286	25	08/13/2015 01:15	WG808624
Bromoform	ND		0.0286	25	08/13/2015 01:15	WG808624
Bromomethane	ND		0.143	25	08/13/2015 01:15	WG808624
n-Butylbenzene	ND		0.0286	25	08/13/2015 01:15	WG808624
sec-Butylbenzene	ND		0.0286	25	08/13/2015 01:15	WG808624
tert-Butylbenzene	ND		0.0286	25	08/13/2015 01:15	WG808624
Carbon tetrachloride	ND		0.0286	25	08/13/2015 01:15	WG808624
Chlorobenzene	ND		0.0286	25	08/13/2015 01:15	WG808624
Chlorodibromomethane	ND		0.0286	25	08/13/2015 01:15	WG808624
Chloroethane	ND		0.143	25	08/13/2015 01:15	WG808624
2-Chloroethyl vinyl ether	ND		1.43	25	08/13/2015 01:15	WG808624
Chloroform	ND		0.143	25	08/13/2015 01:15	WG808624
Chloromethane	ND		0.0715	25	08/13/2015 01:15	WG808624
2-Chlorotoluene	ND		0.0286	25	08/13/2015 01:15	WG808624
4-Chlorotoluene	ND		0.0286	25	08/13/2015 01:15	WG808624
1,2-Dibromo-3-Chloropropane	ND		0.143	25	08/13/2015 01:15	WG808624
1,2-Dibromoethane	ND		0.0286	25	08/13/2015 01:15	WG808624
Dibromomethane	ND		0.0286	25	08/13/2015 01:15	WG808624
1,2-Dichlorobenzene	ND		0.0286	25	08/13/2015 01:15	WG808624
1,3-Dichlorobenzene	ND		0.0286	25	08/13/2015 01:15	WG808624
1,4-Dichlorobenzene	ND		0.0286	25	08/13/2015 01:15	WG808624
Dichlorodifluoromethane	ND		0.143	25	08/13/2015 01:15	WG808624
1,1-Dichloroethane	ND		0.0286	25	08/13/2015 01:15	WG808624
1,2-Dichloroethane	ND		0.0286	25	08/13/2015 01:15	WG808624
1,1-Dichloroethene	ND		0.0286	25	08/13/2015 01:15	WG808624
cis-1,2-Dichloroethene	ND		0.0286	25	08/13/2015 01:15	WG808624
trans-1,2-Dichloroethene	ND		0.0286	25	08/13/2015 01:15	WG808624
1,2-Dichloropropane	ND		0.0286	25	08/13/2015 01:15	WG808624
1,1-Dichloropropene	ND		0.0286	25	08/13/2015 01:15	WG808624

Volatile Organic Compounds (GC/MS) by Method 8260B

Analyte	Result (dry) mg/kg	Qualifier	RDL (dry) mg/kg	Dilution	Analysis date / time	Batch
1,3-Dichloropropane	ND		0.0286	25	08/13/2015 01:15	WG808624
cis-1,3-Dichloropropene	ND		0.0286	25	08/13/2015 01:15	WG808624
trans-1,3-Dichloropropene	ND		0.0286	25	08/13/2015 01:15	WG808624
2,2-Dichloropropane	ND		0.0286	25	08/13/2015 01:15	WG808624
Dicyclopentadiene	0.110		0.0286	25	08/13/2015 01:15	WG808624
Di-isopropyl ether	ND		0.0286	25	08/13/2015 01:15	WG808624
Ethylbenzene	0.129		0.0286	25	08/13/2015 01:15	WG808624
Hexachloro-1,3-butadiene	ND		0.0286	25	08/13/2015 01:15	WG808624
Isopropylbenzene	ND		0.0286	25	08/13/2015 01:15	WG808624
p-Isopropyltoluene	ND		0.0286	25	08/13/2015 01:15	WG808624
2-Butanone (MEK)	ND		0.286	25	08/13/2015 01:15	WG808624
Methylene Chloride	ND		0.143	25	08/13/2015 01:15	WG808624
4-Methyl-2-pentanone (MIBK)	ND		0.286	25	08/13/2015 01:15	WG808624
Methyl tert-butyl ether	ND		0.0286	25	08/13/2015 01:15	WG808624
Naphthalene	0.207		0.143	25	08/13/2015 01:15	WG808624
n-Propylbenzene	0.0679		0.0286	25	08/13/2015 01:15	WG808624
Styrene	ND		0.0286	25	08/13/2015 01:15	WG808624
1,1,1,2-Tetrachloroethane	ND		0.0286	25	08/13/2015 01:15	WG808624
1,1,2,2-Tetrachloroethane	ND		0.0286	25	08/13/2015 01:15	WG808624
1,1,2-Trichlorotrifluoroethane	ND		0.0286	25	08/13/2015 01:15	WG808624
Tetrachloroethene	ND		0.0286	25	08/13/2015 01:15	WG808624
Toluene	ND		0.143	25	08/13/2015 01:15	WG808624
1,2,3-Trichlorobenzene	ND		0.0286	25	08/13/2015 01:15	WG808624
1,2,4-Trichlorobenzene	ND		0.0286	25	08/13/2015 01:15	WG808624
1,1,1-Trichloroethane	ND		0.0286	25	08/13/2015 01:15	WG808624
1,1,2-Trichloroethane	ND		0.0286	25	08/13/2015 01:15	WG808624
Trichloroethene	ND		0.0286	25	08/13/2015 01:15	WG808624
Trichlorofluoromethane	ND		0.143	25	08/13/2015 01:15	WG808624
1,2,3-Trichloropropane	ND		0.0715	25	08/13/2015 01:15	WG808624
1,2,4-Trimethylbenzene	0.225		0.0286	25	08/13/2015 01:15	WG808624
1,2,3-Trimethylbenzene	0.139		0.0286	25	08/13/2015 01:15	WG808624
1,3,5-Trimethylbenzene	0.173		0.0286	25	08/13/2015 01:15	WG808624
Vinyl chloride	ND		0.0286	25	08/13/2015 01:15	WG808624
Xylenes, Total	0.176		0.0858	25	08/13/2015 01:15	WG808624
(S) Toluene-d8	*101*		*88.7-115*		*08/13/2015 01:15*	WG808624
(S) Dibromofluoromethane	*88.0*		*76.3-123*		*08/13/2015 01:15*	WG808624
(S) 4-Bromofluorobenzene	*100*		*69.7-129*		*08/13/2015 01:15*	WG808624

Semi Volatile Organic Compounds (GC/MS) by Method 8270C

Analyte	Result (dry) mg/kg	Qualifier	RDL (dry) mg/kg	Dilution	Analysis date / time	Batch
Acenaphthene	ND		0.189	5	08/13/2015 17:27	WG808662
Acenaphthylene	ND		0.189	5	08/13/2015 17:27	WG808662
Anthracene	ND		0.189	5	08/13/2015 17:27	WG808662
Benzidine	ND		1.90	5	08/13/2015 17:27	WG808662
Benzo(a)anthracene	ND		0.189	5	08/13/2015 17:27	WG808662
Benzo(b)fluoranthene	ND		0.189	5	08/13/2015 17:27	WG808662
Benzo(k)fluoranthene	ND		0.189	5	08/13/2015 17:27	WG808662
Benzo(g,h,i)perylene	ND		0.189	5	08/13/2015 17:27	WG808662
Benzo(a)pyrene	ND		0.189	5	08/13/2015 17:27	WG808662
Bis(2-chlorethoxy)methane	ND		1.90	5	08/13/2015 17:27	WG808662
Bis(2-chloroethyl)ether	ND		1.90	5	08/13/2015 17:27	WG808662
Bis(2-chloroisopropyl)ether	ND		1.90	5	08/13/2015 17:27	WG808662
4-Bromophenyl-phenylether	ND		1.90	5	08/13/2015 17:27	WG808662
2-Chloronaphthalene	ND		0.189	5	08/13/2015 17:27	WG808662
4-Chlorophenyl-phenylether	ND		1.90	5	08/13/2015 17:27	WG808662

Semi Volatile Organic Compounds (GC/MS) by Method 8270C

Analyte	Result (dry) mg/kg	Qualifier	RDL (dry) mg/kg	Dilution	Analysis date / time	Batch
Chrysene	ND		0.189	5	08/13/2015 17:27	WG808662
Dibenz(a,h)anthracene	ND		0.189	5	08/13/2015 17:27	WG808662
3,3-Dichlorobenzidine	ND		1.90	5	08/13/2015 17:27	WG808662
2,4-Dinitrotoluene	ND		1.90	5	08/13/2015 17:27	WG808662
2,6-Dinitrotoluene	ND		1.90	5	08/13/2015 17:27	WG808662
Fluoranthene	ND		0.189	5	08/13/2015 17:27	WG808662
Fluorene	ND		0.189	5	08/13/2015 17:27	WG808662
Hexachlorobenzene	ND		1.90	5	08/13/2015 17:27	WG808662
Hexachloro-1,3-butadiene	ND		1.90	5	08/13/2015 17:27	WG808662
Hexachlorocyclopentadiene	ND		1.90	5	08/13/2015 17:27	WG808662
Hexachloroethane	ND		1.90	5	08/13/2015 17:27	WG808662
Indeno(1,2,3-cd)pyrene	ND		0.189	5	08/13/2015 17:27	WG808662
Isophorone	ND		1.90	5	08/13/2015 17:27	WG808662
Naphthalene	ND		0.189	5	08/13/2015 17:27	WG808662
Nitrobenzene	ND		1.90	5	08/13/2015 17:27	WG808662
n-Nitrosodimethylamine	ND		1.90	5	08/13/2015 17:27	WG808662
n-Nitrosodiphenylamine	ND		1.90	5	08/13/2015 17:27	WG808662
n-Nitrosodi-n-propylamine	ND		1.90	5	08/13/2015 17:27	WG808662
Phenanthrene	ND		0.189	5	08/13/2015 17:27	WG808662
Benzylbutyl phthalate	ND		1.90	5	08/13/2015 17:27	WG808662
Bis(2-ethylhexyl)phthalate	ND		1.90	5	08/13/2015 17:27	WG808662
Di-n-butyl phthalate	ND		1.90	5	08/13/2015 17:27	WG808662
Diethyl phthalate	ND		1.90	5	08/13/2015 17:27	WG808662
Dimethyl phthalate	ND		1.90	5	08/13/2015 17:27	WG808662
Di-n-octyl phthalate	ND		1.90	5	08/13/2015 17:27	WG808662
Pyrene	ND		0.189	5	08/13/2015 17:27	WG808662
1,2,4-Trichlorobenzene	ND		1.90	5	08/13/2015 17:27	WG808662
4-Chloro-3-methylphenol	ND		1.90	5	08/13/2015 17:27	WG808662
2-Chlorophenol	ND		1.90	5	08/13/2015 17:27	WG808662
2,4-Dichlorophenol	ND		1.90	5	08/13/2015 17:27	WG808662
2,4-Dimethylphenol	ND		1.90	5	08/13/2015 17:27	WG808662
4,6-Dinitro-2-methylphenol	ND		1.90	5	08/13/2015 17:27	WG808662
2,4-Dinitrophenol	ND		1.90	5	08/13/2015 17:27	WG808662
2-Nitrophenol	ND		1.90	5	08/13/2015 17:27	WG808662
4-Nitrophenol	ND		1.90	5	08/13/2015 17:27	WG808662
Pentachlorophenol	ND		1.90	5	08/13/2015 17:27	WG808662
Phenol	ND		1.90	5	08/13/2015 17:27	WG808662
2,4,6-Trichlorophenol	ND		1.90	5	08/13/2015 17:27	WG808662
(S) 2-Fluorophenol	*64.8*		*21.1-116*		*08/13/2015 17:27*	WG808662
(S) Phenol-d5	*72.6*		*26.3-121*		*08/13/2015 17:27*	WG808662
(S) Nitrobenzene-d5	*72.7*		*21.9-129*		*08/13/2015 17:27*	WG808662
(S) 2-Fluorobiphenyl	*65.5*		*34.9-129*		*08/13/2015 17:27*	WG808662
(S) 2,4,6-Tribromophenol	*78.5*		*21.6-142*		*08/13/2015 17:27*	WG808662
(S) p-Terphenyl-d14	*76.4*		*21.5-128*		*08/13/2015 17:27*	WG808662

Sample Narrative:

8270C L782221-05 WG808662: Dilution due to matrix

Total Solids by Method 2540 G-2011

Analyte	Result %	Qualifier	Dilution	Analysis date / time	Batch
Total Solids	84.0		1	08/13/2015 07:16	WG808614

Volatile Organic Compounds (GC/MS) by Method 8260B

Analyte	Result (dry) mg/kg	Qualifier	RDL (dry) mg/kg	Dilution	Analysis date / time	Batch
Acetone	ND		0.297	5	08/13/2015 23:52	WG809036
Acrylonitrile	ND		0.0595	5	08/13/2015 23:52	WG809036
Benzene	ND		0.00595	5	08/13/2015 23:52	WG809036
Bromobenzene	ND		0.00595	5	08/13/2015 23:52	WG809036
Bromodichloromethane	ND		0.00595	5	08/13/2015 23:52	WG809036
Bromoform	ND		0.00595	5	08/13/2015 23:52	WG809036
Bromomethane	ND		0.0297	5	08/13/2015 23:52	WG809036
n-Butylbenzene	ND		0.00595	5	08/13/2015 23:52	WG809036
sec-Butylbenzene	ND		0.00595	5	08/13/2015 23:52	WG809036
tert-Butylbenzene	ND		0.00595	5	08/13/2015 23:52	WG809036
Carbon tetrachloride	ND		0.00595	5	08/13/2015 23:52	WG809036
Chlorobenzene	ND		0.00595	5	08/13/2015 23:52	WG809036
Chlorodibromomethane	ND		0.00595	5	08/13/2015 23:52	WG809036
Chloroethane	ND		0.0297	5	08/13/2015 23:52	WG809036
2-Chloroethyl vinyl ether	ND		0.297	5	08/13/2015 23:52	WG809036
Chloroform	ND		0.0297	5	08/13/2015 23:52	WG809036
Chloromethane	ND		0.0149	5	08/13/2015 23:52	WG809036
2-Chlorotoluene	ND		0.00595	5	08/13/2015 23:52	WG809036
4-Chlorotoluene	ND		0.00595	5	08/13/2015 23:52	WG809036
1,2-Dibromo-3-Chloropropane	ND		0.0297	5	08/13/2015 23:52	WG809036
1,2-Dibromoethane	ND		0.00595	5	08/13/2015 23:52	WG809036
Dibromomethane	ND		0.00595	5	08/13/2015 23:52	WG809036
1,2-Dichlorobenzene	ND		0.00595	5	08/13/2015 23:52	WG809036
1,3-Dichlorobenzene	ND		0.00595	5	08/13/2015 23:52	WG809036
1,4-Dichlorobenzene	ND		0.00595	5	08/13/2015 23:52	WG809036
Dichlorodifluoromethane	ND		0.0297	5	08/13/2015 23:52	WG809036
1,1-Dichloroethane	ND		0.00595	5	08/13/2015 23:52	WG809036
1,2-Dichloroethane	ND		0.00595	5	08/13/2015 23:52	WG809036
1,1-Dichloroethene	ND		0.00595	5	08/13/2015 23:52	WG809036
cis-1,2-Dichloroethene	ND		0.00595	5	08/13/2015 23:52	WG809036
trans-1,2-Dichloroethene	ND		0.00595	5	08/13/2015 23:52	WG809036
1,2-Dichloropropane	ND		0.00595	5	08/13/2015 23:52	WG809036
1,1-Dichloropropene	ND		0.00595	5	08/13/2015 23:52	WG809036
1,3-Dichloropropane	ND		0.00595	5	08/13/2015 23:52	WG809036
cis-1,3-Dichloropropene	ND		0.00595	5	08/13/2015 23:52	WG809036
trans-1,3-Dichloropropene	ND		0.00595	5	08/13/2015 23:52	WG809036
2,2-Dichloropropane	ND		0.00595	5	08/13/2015 23:52	WG809036
Dicyclopentadiene	ND		0.00595	5	08/13/2015 23:52	WG809036
Di-isopropyl ether	ND		0.00595	5	08/13/2015 23:52	WG809036
Ethylbenzene	ND		0.00595	5	08/13/2015 23:52	WG809036
Hexachloro-1,3-butadiene	ND		0.00595	5	08/13/2015 23:52	WG809036
Isopropylbenzene	ND		0.00595	5	08/13/2015 23:52	WG809036
p-Isopropyltoluene	ND		0.00595	5	08/13/2015 23:52	WG809036
2-Butanone (MEK)	ND		0.0595	5	08/13/2015 23:52	WG809036
Methylene Chloride	ND		0.0297	5	08/13/2015 23:52	WG809036
4-Methyl-2-pentanone (MIBK)	ND		0.0595	5	08/13/2015 23:52	WG809036
Methyl tert-butyl ether	ND		0.00595	5	08/13/2015 23:52	WG809036
Naphthalene	ND		0.0297	5	08/13/2015 23:52	WG809036
n-Propylbenzene	ND		0.00595	5	08/13/2015 23:52	WG809036
Styrene	ND		0.00595	5	08/13/2015 23:52	WG809036

Volatile Organic Compounds (GC/MS) by Method 8260B

Analyte	Result (dry) mg/kg	Qualifier	RDL (dry) mg/kg	Dilution	Analysis date / time	Batch
1,1,1,2-Tetrachloroethane	ND		0.00595	5	08/13/2015 23:52	WG809036
1,1,2,2-Tetrachloroethane	ND		0.00595	5	08/13/2015 23:52	WG809036
1,1,2-Trichlorotrifluoroethane	ND		0.00595	5	08/13/2015 23:52	WG809036
Tetrachloroethene	ND		0.00595	5	08/13/2015 23:52	WG809036
Toluene	ND		0.0297	5	08/13/2015 23:52	WG809036
1,2,3-Trichlorobenzene	ND		0.00595	5	08/13/2015 23:52	WG809036
1,2,4-Trichlorobenzene	ND		0.00595	5	08/13/2015 23:52	WG809036
1,1,1-Trichloroethane	ND		0.00595	5	08/13/2015 23:52	WG809036
1,1,2-Trichloroethane	ND		0.00595	5	08/13/2015 23:52	WG809036
Trichloroethene	ND		0.00595	5	08/13/2015 23:52	WG809036
Trichlorofluoromethane	ND		0.0297	5	08/13/2015 23:52	WG809036
1,2,3-Trichloropropane	ND		0.0149	5	08/13/2015 23:52	WG809036
1,2,4-Trimethylbenzene	ND		0.00595	5	08/13/2015 23:52	WG809036
1,2,3-Trimethylbenzene	ND		0.00595	5	08/13/2015 23:52	WG809036
1,3,5-Trimethylbenzene	ND		0.00595	5	08/13/2015 23:52	WG809036
Vinyl chloride	ND		0.00595	5	08/13/2015 23:52	WG809036
Xylenes, Total	ND		0.0178	5	08/13/2015 23:52	WG809036
(S) Toluene-d8	*103*		*88.7-115*		*08/13/2015 23:52*	WG809036
(S) Dibromofluoromethane	*90.9*		*76.3-123*		*08/13/2015 23:52*	WG809036
(S) 4-Bromofluorobenzene	*102*		*69.7-129*		*08/13/2015 23:52*	WG809036

Semi Volatile Organic Compounds (GC/MS) by Method 8270C

Analyte	Result (dry) mg/kg	Qualifier	RDL (dry) mg/kg	Dilution	Analysis date / time	Batch
Acenaphthene	ND		0.0393	1	08/13/2015 12:46	WG808662
Acenaphthylene	ND		0.0393	1	08/13/2015 12:46	WG808662
Anthracene	ND		0.0393	1	08/13/2015 12:46	WG808662
Benzidine	ND		0.396	1	08/13/2015 12:46	WG808662
Benzo(a)anthracene	ND		0.0393	1	08/13/2015 12:46	WG808662
Benzo(b)fluoranthene	ND		0.0393	1	08/13/2015 12:46	WG808662
Benzo(k)fluoranthene	ND		0.0393	1	08/13/2015 12:46	WG808662
Benzo(g,h,i)perylene	ND		0.0393	1	08/13/2015 12:46	WG808662
Benzo(a)pyrene	ND		0.0393	1	08/13/2015 12:46	WG808662
Bis(2-chlorethoxy)methane	ND		0.396	1	08/13/2015 12:46	WG808662
Bis(2-chloroethyl)ether	ND		0.396	1	08/13/2015 12:46	WG808662
Bis(2-chloroisopropyl)ether	ND		0.396	1	08/13/2015 12:46	WG808662
4-Bromophenyl-phenylether	ND		0.396	1	08/13/2015 12:46	WG808662
2-Chloronaphthalene	ND		0.0393	1	08/13/2015 12:46	WG808662
4-Chlorophenyl-phenylether	ND		0.396	1	08/13/2015 12:46	WG808662
Chrysene	ND		0.0393	1	08/13/2015 12:46	WG808662
Dibenz(a,h)anthracene	ND		0.0393	1	08/13/2015 12:46	WG808662
3,3-Dichlorobenzidine	ND		0.396	1	08/13/2015 12:46	WG808662
2,4-Dinitrotoluene	ND		0.396	1	08/13/2015 12:46	WG808662
2,6-Dinitrotoluene	ND		0.396	1	08/13/2015 12:46	WG808662
Fluoranthene	ND		0.0393	1	08/13/2015 12:46	WG808662
Fluorene	ND		0.0393	1	08/13/2015 12:46	WG808662
Hexachlorobenzene	ND		0.396	1	08/13/2015 12:46	WG808662
Hexachloro-1,3-butadiene	ND		0.396	1	08/13/2015 12:46	WG808662
Hexachlorocyclopentadiene	ND		0.396	1	08/13/2015 12:46	WG808662
Hexachloroethane	ND		0.396	1	08/13/2015 12:46	WG808662
Indeno(1,2,3-cd)pyrene	ND		0.0393	1	08/13/2015 12:46	WG808662
Isophorone	ND		0.396	1	08/13/2015 12:46	WG808662
Naphthalene	0.199		0.0393	1	08/13/2015 12:46	WG808662
Nitrobenzene	ND		0.396	1	08/13/2015 12:46	WG808662
n-Nitrosodimethylamine	ND		0.396	1	08/13/2015 12:46	WG808662
n-Nitrosodiphenylamine	ND		0.396	1	08/13/2015 12:46	WG808662

Semi Volatile Organic Compounds (GC/MS) by Method 8270C

Analyte	Result (dry) mg/kg	Qualifier	RDL (dry) mg/kg	Dilution	Analysis date / time	Batch
n-Nitrosodi-n-propylamine	ND		0.396	1	08/13/2015 12:46	WG808662
Phenanthrene	ND		0.0393	1	08/13/2015 12:46	WG808662
Benzylbutyl phthalate	ND		0.396	1	08/13/2015 12:46	WG808662
Bis(2-ethylhexyl)phthalate	ND		0.396	1	08/13/2015 12:46	WG808662
Di-n-butyl phthalate	ND		0.396	1	08/13/2015 12:46	WG808662
Diethyl phthalate	ND		0.396	1	08/13/2015 12:46	WG808662
Dimethyl phthalate	ND		0.396	1	08/13/2015 12:46	WG808662
Di-n-octyl phthalate	ND		0.396	1	08/13/2015 12:46	WG808662
Pyrene	ND		0.0393	1	08/13/2015 12:46	WG808662
1,2,4-Trichlorobenzene	ND		0.396	1	08/13/2015 12:46	WG808662
4-Chloro-3-methylphenol	ND		0.396	1	08/13/2015 12:46	WG808662
2-Chlorophenol	ND		0.396	1	08/13/2015 12:46	WG808662
2,4-Dichlorophenol	ND		0.396	1	08/13/2015 12:46	WG808662
2,4-Dimethylphenol	ND		0.396	1	08/13/2015 12:46	WG808662
4,6-Dinitro-2-methylphenol	ND		0.396	1	08/13/2015 12:46	WG808662
2,4-Dinitrophenol	ND		0.396	1	08/13/2015 12:46	WG808662
2-Nitrophenol	ND		0.396	1	08/13/2015 12:46	WG808662
4-Nitrophenol	ND		0.396	1	08/13/2015 12:46	WG808662
Pentachlorophenol	ND		0.396	1	08/13/2015 12:46	WG808662
Phenol	ND		0.396	1	08/13/2015 12:46	WG808662
2,4,6-Trichlorophenol	ND		0.396	1	08/13/2015 12:46	WG808662
(S) 2-Fluorophenol	*82.3*		*21.1-116*		*08/13/2015 12:46*	WG808662
(S) Phenol-d5	*81.9*		*26.3-121*		*08/13/2015 12:46*	WG808662
(S) Nitrobenzene-d5	*81.2*		*21.9-129*		*08/13/2015 12:46*	WG808662
(S) 2-Fluorobiphenyl	*78.1*		*34.9-129*		*08/13/2015 12:46*	WG808662
(S) 2,4,6-Tribromophenol	*99.6*		*21.6-142*		*08/13/2015 12:46*	WG808662
(S) p-Terphenyl-d14	*73.4*		*21.5-128*		*08/13/2015 12:46*	WG808662

Total Solids by Method 2540 G-2011

Analyte	Result %	Qualifier	Dilution	Analysis date / time	Batch
Total Solids	92.4		1	08/13/2015 07:16	WG808614

Mercury by Method 7471A

Analyte	Result (dry) mg/kg	Qualifier	RDL (dry) mg/kg	Dilution	Analysis date / time	Batch
Mercury	0.0597		0.0216	1	08/13/2015 12:40	WG808666

Metals (ICP) by Method 6010B

Analyte	Result (dry) mg/kg	Qualifier	RDL (dry) mg/kg	Dilution	Analysis date / time	Batch
Arsenic	ND		2.16	1	08/13/2015 04:41	WG808635
Barium	36.2		0.541	1	08/13/2015 04:41	WG808635
Cadmium	ND		0.541	1	08/13/2015 04:41	WG808635
Chromium	39.2		1.08	1	08/13/2015 04:41	WG808635
Lead	10.0		0.541	1	08/13/2015 04:41	WG808635
Selenium	ND		2.16	1	08/13/2015 04:41	WG808635
Silver	ND		1.08	1	08/13/2015 04:41	WG808635

Volatile Organic Compounds (GC/MS) by Method 8260B

Analyte	Result (dry) mg/kg	Qualifier	RDL (dry) mg/kg	Dilution	Analysis date / time	Batch
Acetone	ND		27.1	500	08/13/2015 01:55	WG808624
Acrylonitrile	ND		5.41	500	08/13/2015 01:55	WG808624
Benzene	ND		0.541	500	08/13/2015 01:55	WG808624
Bromobenzene	ND		0.541	500	08/13/2015 01:55	WG808624
Bromodichloromethane	ND		0.541	500	08/13/2015 01:55	WG808624
Bromoform	ND		0.541	500	08/13/2015 01:55	WG808624
Bromomethane	ND		2.71	500	08/13/2015 01:55	WG808624
n-Butylbenzene	5.61		0.541	500	08/13/2015 01:55	WG808624
sec-Butylbenzene	1.60		0.541	500	08/13/2015 01:55	WG808624
tert-Butylbenzene	0.569		0.541	500	08/13/2015 01:55	WG808624
Carbon tetrachloride	ND		0.541	500	08/13/2015 01:55	WG808624
Chlorobenzene	ND		0.541	500	08/13/2015 01:55	WG808624
Chlorodibromomethane	ND		0.541	500	08/13/2015 01:55	WG808624
Chloroethane	ND		2.71	500	08/13/2015 01:55	WG808624
2-Chloroethyl vinyl ether	ND		27.1	500	08/13/2015 01:55	WG808624
Chloroform	ND		2.71	500	08/13/2015 01:55	WG808624
Chloromethane	ND		1.35	500	08/13/2015 01:55	WG808624
2-Chlorotoluene	ND		0.541	500	08/13/2015 01:55	WG808624
4-Chlorotoluene	ND		0.541	500	08/13/2015 01:55	WG808624
1,2-Dibromo-3-Chloropropane	ND		2.71	500	08/13/2015 01:55	WG808624
1,2-Dibromoethane	ND		0.541	500	08/13/2015 01:55	WG808624
Dibromomethane	ND		0.541	500	08/13/2015 01:55	WG808624
1,2-Dichlorobenzene	ND		0.541	500	08/13/2015 01:55	WG808624
1,3-Dichlorobenzene	ND		0.541	500	08/13/2015 01:55	WG808624
1,4-Dichlorobenzene	ND		0.541	500	08/13/2015 01:55	WG808624
Dichlorodifluoromethane	ND		2.71	500	08/13/2015 01:55	WG808624
1,1-Dichloroethane	ND		0.541	500	08/13/2015 01:55	WG808624
1,2-Dichloroethane	ND		0.541	500	08/13/2015 01:55	WG808624
1,1-Dichloroethene	ND		0.541	500	08/13/2015 01:55	WG808624
cis-1,2-Dichloroethene	ND		0.541	500	08/13/2015 01:55	WG808624
trans-1,2-Dichloroethene	ND		0.541	500	08/13/2015 01:55	WG808624
1,2-Dichloropropane	ND		0.541	500	08/13/2015 01:55	WG808624
1,1-Dichloropropene	ND		0.541	500	08/13/2015 01:55	WG808624

Volatile Organic Compounds (GC/MS) by Method 8260B

Analyte	Result (dry) mg/kg	Qualifier	RDL (dry) mg/kg	Dilution	Analysis date / time	Batch
1,3-Dichloropropane	ND		0.541	500	08/13/2015 01:55	WG808624
cis-1,3-Dichloropropene	ND		0.541	500	08/13/2015 01:55	WG808624
trans-1,3-Dichloropropene	ND		0.541	500	08/13/2015 01:55	WG808624
2,2-Dichloropropane	ND		0.541	500	08/13/2015 01:55	WG808624
Dicyclopentadiene	104		0.541	500	08/13/2015 01:55	WG808624
Di-isopropyl ether	ND		0.541	500	08/13/2015 01:55	WG808624
Ethylbenzene	23.4		0.541	500	08/13/2015 01:55	WG808624
Hexachloro-1,3-butadiene	ND		0.541	500	08/13/2015 01:55	WG808624
Isopropylbenzene	4.51		0.541	500	08/13/2015 01:55	WG808624
p-Isopropyltoluene	ND		0.541	500	08/13/2015 01:55	WG808624
2-Butanone (MEK)	ND		5.41	500	08/13/2015 01:55	WG808624
Methylene Chloride	ND		2.71	500	08/13/2015 01:55	WG808624
4-Methyl-2-pentanone (MIBK)	ND		5.41	500	08/13/2015 01:55	WG808624
Methyl tert-butyl ether	ND		0.541	500	08/13/2015 01:55	WG808624
Naphthalene	248		13.5	2500	08/14/2015 00:11	WG809036
n-Propylbenzene	21.6		0.541	500	08/13/2015 01:55	WG808624
Styrene	ND		0.541	500	08/13/2015 01:55	WG808624
1,1,1,2-Tetrachloroethane	ND		0.541	500	08/13/2015 01:55	WG808624
1,1,2,2-Tetrachloroethane	ND		0.541	500	08/13/2015 01:55	WG808624
1,1,2-Trichlorotrifluoroethane	ND		0.541	500	08/13/2015 01:55	WG808624
Tetrachloroethene	ND		0.541	500	08/13/2015 01:55	WG808624
Toluene	2.78		2.71	500	08/13/2015 01:55	WG808624
1,2,3-Trichlorobenzene	ND		0.541	500	08/13/2015 01:55	WG808624
1,2,4-Trichlorobenzene	ND		0.541	500	08/13/2015 01:55	WG808624
1,1,1-Trichloroethane	ND		0.541	500	08/13/2015 01:55	WG808624
1,1,2-Trichloroethane	ND		0.541	500	08/13/2015 01:55	WG808624
Trichloroethene	ND		0.541	500	08/13/2015 01:55	WG808624
Trichlorofluoromethane	ND		2.71	500	08/13/2015 01:55	WG808624
1,2,3-Trichloropropane	ND		1.35	500	08/13/2015 01:55	WG808624
1,2,4-Trimethylbenzene	336		2.71	2500	08/14/2015 00:11	WG809036
1,2,3-Trimethylbenzene	68.0		0.541	500	08/13/2015 01:55	WG808624
1,3,5-Trimethylbenzene	63.2		0.541	500	08/13/2015 01:55	WG808624
Vinyl chloride	ND		0.541	500	08/13/2015 01:55	WG808624
Xylenes, Total	110		1.62	500	08/13/2015 01:55	WG808624
(S) Toluene-d8	*102*		*88.7-115*		*08/13/2015 01:55*	WG808624
(S) Dibromofluoromethane	*89.8*		*76.3-123*		*08/13/2015 01:55*	WG808624
(S) 4-Bromofluorobenzene	*108*		*69.7-129*		*08/13/2015 01:55*	WG808624

Semi Volatile Organic Compounds (GC/MS) by Method 8270C

Analyte	Result (dry) mg/kg	Qualifier	RDL (dry) mg/kg	Dilution	Analysis date / time	Batch
Acenaphthene	ND		1.79	50	08/13/2015 20:54	WG808662
Acenaphthylene	ND		1.79	50	08/13/2015 20:54	WG808662
Anthracene	ND		1.79	50	08/13/2015 20:54	WG808662
Benzidine	ND		18.0	50	08/13/2015 20:54	WG808662
Benzo(a)anthracene	ND		1.79	50	08/13/2015 20:54	WG808662
Benzo(b)fluoranthene	ND		17.9	500	08/14/2015 11:14	WG808662
Benzo(k)fluoranthene	ND		17.9	500	08/14/2015 11:14	WG808662
Benzo(g,h,i)perylene	ND		17.9	500	08/14/2015 11:14	WG808662
Benzo(a)pyrene	ND		17.9	500	08/14/2015 11:14	WG808662
Bis(2-chlorethoxy)methane	ND		18.0	50	08/13/2015 20:54	WG808662
Bis(2-chloroethyl)ether	ND		18.0	50	08/13/2015 20:54	WG808662
Bis(2-chloroisopropyl)ether	ND		18.0	50	08/13/2015 20:54	WG808662
4-Bromophenyl-phenylether	ND		18.0	50	08/13/2015 20:54	WG808662
2-Chloronaphthalene	ND		1.79	50	08/13/2015 20:54	WG808662
4-Chlorophenyl-phenylether	ND		18.0	50	08/13/2015 20:54	WG808662

Semi Volatile Organic Compounds (GC/MS) by Method 8270C

Analyte	Result (dry) mg/kg	Qualifier	RDL (dry) mg/kg	Dilution	Analysis date / time	Batch
Chrysene	ND		1.79	50	08/13/2015 20:54	WG808662
Dibenz(a,h)anthracene	ND		17.9	500	08/14/2015 11:14	WG808662
3,3-Dichlorobenzidine	ND		18.0	50	08/13/2015 20:54	WG808662
2,4-Dinitrotoluene	ND		18.0	50	08/13/2015 20:54	WG808662
2,6-Dinitrotoluene	ND		18.0	50	08/13/2015 20:54	WG808662
Fluoranthene	ND		1.79	50	08/13/2015 20:54	WG808662
Fluorene	ND		1.79	50	08/13/2015 20:54	WG808662
Hexachlorobenzene	ND		18.0	50	08/13/2015 20:54	WG808662
Hexachloro-1,3-butadiene	ND		18.0	50	08/13/2015 20:54	WG808662
Hexachlorocyclopentadiene	ND		18.0	50	08/13/2015 20:54	WG808662
Hexachloroethane	ND		18.0	50	08/13/2015 20:54	WG808662
Indeno(1,2,3-cd)pyrene	ND		17.9	500	08/14/2015 11:14	WG808662
Isophorone	ND		18.0	50	08/13/2015 20:54	WG808662
Naphthalene	578		17.9	500	08/14/2015 11:14	WG808662
Nitrobenzene	ND		18.0	50	08/13/2015 20:54	WG808662
n-Nitrosodimethylamine	ND		18.0	50	08/13/2015 20:54	WG808662
n-Nitrosodiphenylamine	ND		18.0	50	08/13/2015 20:54	WG808662
n-Nitrosodi-n-propylamine	ND		18.0	50	08/13/2015 20:54	WG808662
Phenanthrene	ND		1.79	50	08/13/2015 20:54	WG808662
Benzylbutyl phthalate	ND		18.0	50	08/13/2015 20:54	WG808662
Bis(2-ethylhexyl)phthalate	ND		18.0	50	08/13/2015 20:54	WG808662
Di-n-butyl phthalate	ND		18.0	50	08/13/2015 20:54	WG808662
Diethyl phthalate	ND		18.0	50	08/13/2015 20:54	WG808662
Dimethyl phthalate	ND		18.0	50	08/13/2015 20:54	WG808662
Di-n-octyl phthalate	ND		18.0	50	08/13/2015 20:54	WG808662
Pyrene	ND		1.79	50	08/13/2015 20:54	WG808662
1,2,4-Trichlorobenzene	ND		18.0	50	08/13/2015 20:54	WG808662
4-Chloro-3-methylphenol	ND		18.0	50	08/13/2015 20:54	WG808662
2-Chlorophenol	ND		18.0	50	08/13/2015 20:54	WG808662
2,4-Dichlorophenol	ND		18.0	50	08/13/2015 20:54	WG808662
2,4-Dimethylphenol	ND		18.0	50	08/13/2015 20:54	WG808662
4,6-Dinitro-2-methylphenol	ND		18.0	50	08/13/2015 20:54	WG808662
2,4-Dinitrophenol	ND		18.0	50	08/13/2015 20:54	WG808662
2-Nitrophenol	ND		18.0	50	08/13/2015 20:54	WG808662
4-Nitrophenol	ND		18.0	50	08/13/2015 20:54	WG808662
Pentachlorophenol	ND		18.0	50	08/13/2015 20:54	WG808662
Phenol	ND		18.0	50	08/13/2015 20:54	WG808662
2,4,6-Trichlorophenol	ND		18.0	50	08/13/2015 20:54	WG808662
(S) 2-Fluorophenol	*85.7*	J7	*21.1-116*		*08/13/2015 20:54*	WG808662
(S) Phenol-d5	*108*	J7	*26.3-121*		*08/13/2015 20:54*	WG808662
(S) Nitrobenzene-d5	*349*	J7	*21.9-129*		*08/13/2015 20:54*	WG808662
(S) 2-Fluorobiphenyl	*89.5*	J7	*34.9-129*		*08/13/2015 20:54*	WG808662
(S) 2,4,6-Tribromophenol	*89.9*	J7	*21.6-142*		*08/13/2015 20:54*	WG808662
(S) p-Terphenyl-d14	*114*	J7	*21.5-128*		*08/13/2015 20:54*	WG808662

Sample Narrative:

8270C L782221-07 WG808662: Dilution due to matrix

Total Solids by Method 2540 G-2011

Analyte	Result %	Qualifier	Dilution	Analysis date / time	Batch
Total Solids	90.4		1	08/13/2015 07:17	WG808614

Volatile Organic Compounds (GC/MS) by Method 8260B

Analyte	Result (dry) mg/kg	Qualifier	RDL (dry) mg/kg	Dilution	Analysis date / time	Batch
Acetone	ND		27.7	500	08/13/2015 02:14	WG808624
Acrylonitrile	ND		5.53	500	08/13/2015 02:14	WG808624
Benzene	ND		0.553	500	08/13/2015 02:14	WG808624
Bromobenzene	ND		0.553	500	08/13/2015 02:14	WG808624
Bromodichloromethane	ND		0.553	500	08/13/2015 02:14	WG808624
Bromoform	ND		0.553	500	08/13/2015 02:14	WG808624
Bromomethane	ND		2.77	500	08/13/2015 02:14	WG808624
n-Butylbenzene	11.0		0.553	500	08/13/2015 02:14	WG808624
sec-Butylbenzene	2.93		0.553	500	08/13/2015 02:14	WG808624
tert-Butylbenzene	1.24		0.553	500	08/13/2015 02:14	WG808624
Carbon tetrachloride	ND		0.553	500	08/13/2015 02:14	WG808624
Chlorobenzene	ND		0.553	500	08/13/2015 02:14	WG808624
Chlorodibromomethane	ND		0.553	500	08/13/2015 02:14	WG808624
Chloroethane	ND		2.77	500	08/13/2015 02:14	WG808624
2-Chloroethyl vinyl ether	ND		27.7	500	08/13/2015 02:14	WG808624
Chloroform	ND		2.77	500	08/13/2015 02:14	WG808624
Chloromethane	ND		1.38	500	08/13/2015 02:14	WG808624
2-Chlorotoluene	ND		0.553	500	08/13/2015 02:14	WG808624
4-Chlorotoluene	ND		0.553	500	08/13/2015 02:14	WG808624
1,2-Dibromo-3-Chloropropane	ND		2.77	500	08/13/2015 02:14	WG808624
1,2-Dibromoethane	ND		0.553	500	08/13/2015 02:14	WG808624
Dibromomethane	ND		0.553	500	08/13/2015 02:14	WG808624
1,2-Dichlorobenzene	ND		0.553	500	08/13/2015 02:14	WG808624
1,3-Dichlorobenzene	ND		0.553	500	08/13/2015 02:14	WG808624
1,4-Dichlorobenzene	ND		0.553	500	08/13/2015 02:14	WG808624
Dichlorodifluoromethane	ND		2.77	500	08/13/2015 02:14	WG808624
1,1-Dichloroethane	ND		0.553	500	08/13/2015 02:14	WG808624
1,2-Dichloroethane	ND		0.553	500	08/13/2015 02:14	WG808624
1,1-Dichloroethene	ND		0.553	500	08/13/2015 02:14	WG808624
cis-1,2-Dichloroethene	ND		0.553	500	08/13/2015 02:14	WG808624
trans-1,2-Dichloroethene	ND		0.553	500	08/13/2015 02:14	WG808624
1,2-Dichloropropane	ND		0.553	500	08/13/2015 02:14	WG808624
1,1-Dichloropropene	ND		0.553	500	08/13/2015 02:14	WG808624
1,3-Dichloropropane	ND		0.553	500	08/13/2015 02:14	WG808624
cis-1,3-Dichloropropene	ND		0.553	500	08/13/2015 02:14	WG808624
trans-1,3-Dichloropropene	ND		0.553	500	08/13/2015 02:14	WG808624
2,2-Dichloropropane	ND		0.553	500	08/13/2015 02:14	WG808624
Dicyclopentadiene	383		5.53	5000	08/14/2015 00:31	WG809036
Di-isopropyl ether	ND		0.553	500	08/13/2015 02:14	WG808624
Ethylbenzene	51.0		0.553	500	08/13/2015 02:14	WG808624
Hexachloro-1,3-butadiene	ND		0.553	500	08/13/2015 02:14	WG808624
Isopropylbenzene	9.12		0.553	500	08/13/2015 02:14	WG808624
p-Isopropyltoluene	ND		0.553	500	08/13/2015 02:14	WG808624
2-Butanone (MEK)	ND		5.53	500	08/13/2015 02:14	WG808624
Methylene Chloride	ND		2.77	500	08/13/2015 02:14	WG808624
4-Methyl-2-pentanone (MIBK)	ND		5.53	500	08/13/2015 02:14	WG808624
Methyl tert-butyl ether	ND		0.553	500	08/13/2015 02:14	WG808624
Naphthalene	358		27.7	5000	08/14/2015 00:31	WG809036
n-Propylbenzene	43.6		0.553	500	08/13/2015 02:14	WG808624
Styrene	ND		0.553	500	08/13/2015 02:14	WG808624

Volatile Organic Compounds (GC/MS) by Method 8260B

Analyte	Result (dry) mg/kg	Qualifier	RDL (dry) mg/kg	Dilution	Analysis date / time	Batch
1,1,1,2-Tetrachloroethane	ND		0.553	500	08/13/2015 02:14	WG808624
1,1,2,2-Tetrachloroethane	ND		0.553	500	08/13/2015 02:14	WG808624
1,1,2-Trichlorotrifluoroethane	ND		0.553	500	08/13/2015 02:14	WG808624
Tetrachloroethene	ND		0.553	500	08/13/2015 02:14	WG808624
Toluene	6.35		2.77	500	08/13/2015 02:14	WG808624
1,2,3-Trichlorobenzene	ND		0.553	500	08/13/2015 02:14	WG808624
1,2,4-Trichlorobenzene	ND		0.553	500	08/13/2015 02:14	WG808624
1,1,1-Trichloroethane	ND		0.553	500	08/13/2015 02:14	WG808624
1,1,2-Trichloroethane	ND		0.553	500	08/13/2015 02:14	WG808624
Trichloroethene	ND		0.553	500	08/13/2015 02:14	WG808624
Trichlorofluoromethane	ND		2.77	500	08/13/2015 02:14	WG808624
1,2,3-Trichloropropane	ND		1.38	500	08/13/2015 02:14	WG808624
1,2,4-Trimethylbenzene	487		5.53	5000	08/14/2015 00:31	WG809036
1,2,3-Trimethylbenzene	198		5.53	5000	08/14/2015 00:31	WG809036
1,3,5-Trimethylbenzene	177		5.53	5000	08/14/2015 00:31	WG809036
Vinyl chloride	ND		0.553	500	08/13/2015 02:14	WG808624
Xylenes, Total	232		1.66	500	08/13/2015 02:14	WG808624
(S) Toluene-d8	*102*		*88.7-115*		*08/13/2015 02:14*	WG808624
(S) Dibromofluoromethane	*90.7*		*76.3-123*		*08/13/2015 02:14*	WG808624
(S) 4-Bromofluorobenzene	*111*		*69.7-129*		*08/13/2015 02:14*	WG808624

Semi Volatile Organic Compounds (GC/MS) by Method 8270C

Analyte	Result (dry) mg/kg	Qualifier	RDL (dry) mg/kg	Dilution	Analysis date / time	Batch
Acenaphthene	ND		1.83	50	08/13/2015 21:18	WG808662
Acenaphthylene	ND		1.83	50	08/13/2015 21:18	WG808662
Anthracene	ND		1.83	50	08/13/2015 21:18	WG808662
Benzidine	ND		18.4	50	08/13/2015 21:18	WG808662
Benzo(a)anthracene	ND		1.83	50	08/13/2015 21:18	WG808662
Benzo(b)fluoranthene	ND		18.3	500	08/14/2015 11:37	WG808662
Benzo(k)fluoranthene	ND		18.3	500	08/14/2015 11:37	WG808662
Benzo(g,h,i)perylene	ND		18.3	500	08/14/2015 11:37	WG808662
Benzo(a)pyrene	ND		18.3	500	08/14/2015 11:37	WG808662
Bis(2-chlorethoxy)methane	ND		18.4	50	08/13/2015 21:18	WG808662
Bis(2-chloroethyl)ether	ND		18.4	50	08/13/2015 21:18	WG808662
Bis(2-chloroisopropyl)ether	ND		18.4	50	08/13/2015 21:18	WG808662
4-Bromophenyl-phenylether	ND		18.4	50	08/13/2015 21:18	WG808662
2-Chloronaphthalene	ND		1.83	50	08/13/2015 21:18	WG808662
4-Chlorophenyl-phenylether	ND		18.4	50	08/13/2015 21:18	WG808662
Chrysene	ND		1.83	50	08/13/2015 21:18	WG808662
Dibenz(a,h)anthracene	ND		18.3	500	08/14/2015 11:37	WG808662
3,3-Dichlorobenzidine	ND		18.4	50	08/13/2015 21:18	WG808662
2,4-Dinitrotoluene	ND		18.4	50	08/13/2015 21:18	WG808662
2,6-Dinitrotoluene	ND		18.4	50	08/13/2015 21:18	WG808662
Fluoranthene	ND		1.83	50	08/13/2015 21:18	WG808662
Fluorene	ND		1.83	50	08/13/2015 21:18	WG808662
Hexachlorobenzene	ND		18.4	50	08/13/2015 21:18	WG808662
Hexachloro-1,3-butadiene	ND		18.4	50	08/13/2015 21:18	WG808662
Hexachlorocyclopentadiene	ND		18.4	50	08/13/2015 21:18	WG808662
Hexachloroethane	ND		18.4	50	08/13/2015 21:18	WG808662
Indeno(1,2,3-cd)pyrene	ND		18.3	500	08/14/2015 11:37	WG808662
Isophorone	ND		18.4	50	08/13/2015 21:18	WG808662
Naphthalene	464		18.3	500	08/14/2015 11:37	WG808662
Nitrobenzene	ND		18.4	50	08/13/2015 21:18	WG808662
n-Nitrosodimethylamine	ND		18.4	50	08/13/2015 21:18	WG808662
n-Nitrosodiphenylamine	ND		18.4	50	08/13/2015 21:18	WG808662

Semi Volatile Organic Compounds (GC/MS) by Method 8270C

Analyte	Result (dry) mg/kg	Qualifier	RDL (dry) mg/kg	Dilution	Analysis date / time	Batch
n-Nitrosodi-n-propylamine	ND		18.4	50	08/13/2015 21:18	WG808662
Phenanthrene	ND		1.83	50	08/13/2015 21:18	WG808662
Benzylbutyl phthalate	ND		18.4	50	08/13/2015 21:18	WG808662
Bis(2-ethylhexyl)phthalate	ND		18.4	50	08/13/2015 21:18	WG808662
Di-n-butyl phthalate	ND		18.4	50	08/13/2015 21:18	WG808662
Diethyl phthalate	ND		18.4	50	08/13/2015 21:18	WG808662
Dimethyl phthalate	ND		18.4	50	08/13/2015 21:18	WG808662
Di-n-octyl phthalate	ND		18.4	50	08/13/2015 21:18	WG808662
Pyrene	ND		1.83	50	08/13/2015 21:18	WG808662
1,2,4-Trichlorobenzene	ND		18.4	50	08/13/2015 21:18	WG808662
4-Chloro-3-methylphenol	ND		18.4	50	08/13/2015 21:18	WG808662
2-Chlorophenol	ND		18.4	50	08/13/2015 21:18	WG808662
2,4-Dichlorophenol	ND		18.4	50	08/13/2015 21:18	WG808662
2,4-Dimethylphenol	ND		18.4	50	08/13/2015 21:18	WG808662
4,6-Dinitro-2-methylphenol	ND		18.4	50	08/13/2015 21:18	WG808662
2,4-Dinitrophenol	ND		18.4	50	08/13/2015 21:18	WG808662
2-Nitrophenol	ND		18.4	50	08/13/2015 21:18	WG808662
4-Nitrophenol	ND		18.4	50	08/13/2015 21:18	WG808662
Pentachlorophenol	ND		18.4	50	08/13/2015 21:18	WG808662
Phenol	ND		18.4	50	08/13/2015 21:18	WG808662
2,4,6-Trichlorophenol	ND		18.4	50	08/13/2015 21:18	WG808662
(S) 2-Fluorophenol	*96.2*	J7	*21.1-116*		*08/13/2015 21:18*	WG808662
(S) Phenol-d5	*102*	J7	*26.3-121*		*08/13/2015 21:18*	WG808662
(S) Nitrobenzene-d5	*271*	J7	*21.9-129*		*08/13/2015 21:18*	WG808662
(S) 2-Fluorobiphenyl	*90.3*	J7	*34.9-129*		*08/13/2015 21:18*	WG808662
(S) 2,4,6-Tribromophenol	*98.4*	J7	*21.6-142*		*08/13/2015 21:18*	WG808662
(S) p-Terphenyl-d14	*103*	J7	*21.5-128*		*08/13/2015 21:18*	WG808662

Sample Narrative:

8270C L782221-08 WG808662: Dilution due to matrix

Total Solids by Method 2540 G-2011

Analyte	Result %	Qualifier	Dilution	Analysis date / time	Batch
Total Solids	90.7		1	08/13/2015 07:17	WG808614

Mercury by Method 7471A

Analyte	Result (dry) mg/kg	Qualifier	RDL (dry) mg/kg	Dilution	Analysis date / time	Batch
Mercury	ND		0.0220	1	08/13/2015 12:43	WG808666

Metals (ICP) by Method 6010B

Analyte	Result (dry) mg/kg	Qualifier	RDL (dry) mg/kg	Dilution	Analysis date / time	Batch
Arsenic	ND		2.20	1	08/13/2015 04:44	WG808635
Barium	29.8		0.551	1	08/13/2015 04:44	WG808635
Cadmium	ND		0.551	1	08/13/2015 04:44	WG808635
Chromium	9.80		1.10	1	08/13/2015 04:44	WG808635
Lead	8.29		0.551	1	08/13/2015 04:44	WG808635
Selenium	ND		2.20	1	08/13/2015 04:44	WG808635
Silver	ND		1.10	1	08/13/2015 04:44	WG808635

Volatile Organic Compounds (GC/MS) by Method 8260B

Analyte	Result (dry) mg/kg	Qualifier	RDL (dry) mg/kg	Dilution	Analysis date / time	Batch
Acetone	ND		0.276	5	08/13/2015 02:34	WG808624
Acrylonitrile	ND		0.0551	5	08/13/2015 02:34	WG808624
Benzene	ND		0.00551	5	08/13/2015 02:34	WG808624
Bromobenzene	ND		0.00551	5	08/13/2015 02:34	WG808624
Bromodichloromethane	ND		0.00551	5	08/13/2015 02:34	WG808624
Bromoform	ND		0.00551	5	08/13/2015 02:34	WG808624
Bromomethane	ND		0.0276	5	08/13/2015 02:34	WG808624
n-Butylbenzene	ND		0.00551	5	08/13/2015 02:34	WG808624
sec-Butylbenzene	ND		0.00551	5	08/13/2015 02:34	WG808624
tert-Butylbenzene	ND		0.00551	5	08/13/2015 02:34	WG808624
Carbon tetrachloride	ND		0.00551	5	08/13/2015 02:34	WG808624
Chlorobenzene	ND		0.00551	5	08/13/2015 02:34	WG808624
Chlorodibromomethane	ND		0.00551	5	08/13/2015 02:34	WG808624
Chloroethane	ND		0.0276	5	08/13/2015 02:34	WG808624
2-Chloroethyl vinyl ether	ND		0.276	5	08/13/2015 02:34	WG808624
Chloroform	ND		0.0276	5	08/13/2015 02:34	WG808624
Chloromethane	ND		0.0138	5	08/13/2015 02:34	WG808624
2-Chlorotoluene	ND		0.00551	5	08/13/2015 02:34	WG808624
4-Chlorotoluene	ND		0.00551	5	08/13/2015 02:34	WG808624
1,2-Dibromo-3-Chloropropane	ND		0.0276	5	08/13/2015 02:34	WG808624
1,2-Dibromoethane	ND		0.00551	5	08/13/2015 02:34	WG808624
Dibromomethane	ND		0.00551	5	08/13/2015 02:34	WG808624
1,2-Dichlorobenzene	ND		0.00551	5	08/13/2015 02:34	WG808624
1,3-Dichlorobenzene	ND		0.00551	5	08/13/2015 02:34	WG808624
1,4-Dichlorobenzene	ND		0.00551	5	08/13/2015 02:34	WG808624
Dichlorodifluoromethane	ND		0.0276	5	08/13/2015 02:34	WG808624
1,1-Dichloroethane	ND		0.00551	5	08/13/2015 02:34	WG808624
1,2-Dichloroethane	ND		0.00551	5	08/13/2015 02:34	WG808624
1,1-Dichloroethene	ND		0.00551	5	08/13/2015 02:34	WG808624
cis-1,2-Dichloroethene	ND		0.00551	5	08/13/2015 02:34	WG808624
trans-1,2-Dichloroethene	ND		0.00551	5	08/13/2015 02:34	WG808624
1,2-Dichloropropane	ND		0.00551	5	08/13/2015 02:34	WG808624
1,1-Dichloropropene	ND		0.00551	5	08/13/2015 02:34	WG808624

Volatile Organic Compounds (GC/MS) by Method 8260B

Analyte	Result (dry) mg/kg	Qualifier	RDL (dry) mg/kg	Dilution	Analysis date / time	Batch
1,3-Dichloropropane	ND		0.00551	5	08/13/2015 02:34	WG808624
cis-1,3-Dichloropropene	ND		0.00551	5	08/13/2015 02:34	WG808624
trans-1,3-Dichloropropene	ND		0.00551	5	08/13/2015 02:34	WG808624
2,2-Dichloropropane	ND		0.00551	5	08/13/2015 02:34	WG808624
Dicyclopentadiene	0.538		0.00551	5	08/14/2015 00:51	WG809036
Di-isopropyl ether	ND		0.00551	5	08/13/2015 02:34	WG808624
Ethylbenzene	0.0364		0.00551	5	08/13/2015 02:34	WG808624
Hexachloro-1,3-butadiene	ND		0.00551	5	08/13/2015 02:34	WG808624
Isopropylbenzene	0.0129		0.00551	5	08/13/2015 02:34	WG808624
p-Isopropyltoluene	ND		0.00551	5	08/13/2015 02:34	WG808624
2-Butanone (MEK)	ND		0.0551	5	08/13/2015 02:34	WG808624
Methylene Chloride	ND		0.0276	5	08/13/2015 02:34	WG808624
4-Methyl-2-pentanone (MIBK)	ND		0.0551	5	08/13/2015 02:34	WG808624
Methyl tert-butyl ether	ND		0.00551	5	08/13/2015 02:34	WG808624
Naphthalene	0.150		0.0276	5	08/14/2015 00:51	WG809036
n-Propylbenzene	0.0252		0.00551	5	08/13/2015 02:34	WG808624
Styrene	ND		0.00551	5	08/13/2015 02:34	WG808624
1,1,1,2-Tetrachloroethane	ND		0.00551	5	08/13/2015 02:34	WG808624
1,1,2,2-Tetrachloroethane	ND		0.00551	5	08/13/2015 02:34	WG808624
1,1,2-Trichlorotrifluoroethane	ND		0.00551	5	08/13/2015 02:34	WG808624
Tetrachloroethene	ND		0.00551	5	08/13/2015 02:34	WG808624
Toluene	ND		0.0276	5	08/13/2015 02:34	WG808624
1,2,3-Trichlorobenzene	ND		0.00551	5	08/13/2015 02:34	WG808624
1,2,4-Trichlorobenzene	ND		0.00551	5	08/13/2015 02:34	WG808624
1,1,1-Trichloroethane	ND		0.00551	5	08/13/2015 02:34	WG808624
1,1,2-Trichloroethane	ND		0.00551	5	08/13/2015 02:34	WG808624
Trichloroethene	ND		0.00551	5	08/13/2015 02:34	WG808624
Trichlorofluoromethane	ND		0.0276	5	08/13/2015 02:34	WG808624
1,2,3-Trichloropropane	ND		0.0138	5	08/13/2015 02:34	WG808624
1,2,4-Trimethylbenzene	0.0529		0.00551	5	08/14/2015 00:51	WG809036
1,2,3-Trimethylbenzene	0.0438		0.00551	5	08/14/2015 00:51	WG809036
1,3,5-Trimethylbenzene	0.0133		0.00551	5	08/14/2015 00:51	WG809036
Vinyl chloride	ND		0.00551	5	08/13/2015 02:34	WG808624
Xylenes, Total	0.0296		0.0165	5	08/13/2015 02:34	WG808624
(S) Toluene-d8	*101*		*88.7-115*		*08/13/2015 02:34*	WG808624
(S) Dibromofluoromethane	*91.9*		*76.3-123*		*08/13/2015 02:34*	WG808624
(S) 4-Bromofluorobenzene	*104*		*69.7-129*		*08/13/2015 02:34*	WG808624

Semi Volatile Organic Compounds (GC/MS) by Method 8270C

Analyte	Result (dry) mg/kg	Qualifier	RDL (dry) mg/kg	Dilution	Analysis date / time	Batch
Acenaphthene	ND		0.182	5	08/13/2015 19:21	WG808662
Acenaphthylene	ND		0.182	5	08/13/2015 19:21	WG808662
Anthracene	ND		0.182	5	08/13/2015 19:21	WG808662
Benzidine	ND		1.84	5	08/13/2015 19:21	WG808662
Benzo(a)anthracene	ND		0.182	5	08/13/2015 19:21	WG808662
Benzo(b)fluoranthene	ND		0.182	5	08/13/2015 19:21	WG808662
Benzo(k)fluoranthene	ND		0.182	5	08/13/2015 19:21	WG808662
Benzo(g,h,i)perylene	ND		0.182	5	08/13/2015 19:21	WG808662
Benzo(a)pyrene	ND		0.182	5	08/13/2015 19:21	WG808662
Bis(2-chlorethoxy)methane	ND		1.84	5	08/13/2015 19:21	WG808662
Bis(2-chloroethyl)ether	ND		1.84	5	08/13/2015 19:21	WG808662
Bis(2-chloroisopropyl)ether	ND		1.84	5	08/13/2015 19:21	WG808662
4-Bromophenyl-phenylether	ND		1.84	5	08/13/2015 19:21	WG808662
2-Chloronaphthalene	ND		0.182	5	08/13/2015 19:21	WG808662
4-Chlorophenyl-phenylether	ND		1.84	5	08/13/2015 19:21	WG808662

Semi Volatile Organic Compounds (GC/MS) by Method 8270C

Analyte	Result (dry) mg/kg	Qualifier	RDL (dry) mg/kg	Dilution	Analysis date / time	Batch
Chrysene	ND		0.182	5	08/13/2015 19:21	WG808662
Dibenz(a,h)anthracene	ND		0.182	5	08/13/2015 19:21	WG808662
3,3-Dichlorobenzidine	ND		1.84	5	08/13/2015 19:21	WG808662
2,4-Dinitrotoluene	ND		1.84	5	08/13/2015 19:21	WG808662
2,6-Dinitrotoluene	ND		1.84	5	08/13/2015 19:21	WG808662
Fluoranthene	ND		0.182	5	08/13/2015 19:21	WG808662
Fluorene	ND		0.182	5	08/13/2015 19:21	WG808662
Hexachlorobenzene	ND		1.84	5	08/13/2015 19:21	WG808662
Hexachloro-1,3-butadiene	ND		1.84	5	08/13/2015 19:21	WG808662
Hexachlorocyclopentadiene	ND		1.84	5	08/13/2015 19:21	WG808662
Hexachloroethane	ND		1.84	5	08/13/2015 19:21	WG808662
Indeno(1,2,3-cd)pyrene	ND		0.182	5	08/13/2015 19:21	WG808662
Isophorone	ND		1.84	5	08/13/2015 19:21	WG808662
Naphthalene	2.03		0.182	5	08/13/2015 19:21	WG808662
Nitrobenzene	ND		1.84	5	08/13/2015 19:21	WG808662
n-Nitrosodimethylamine	ND		1.84	5	08/13/2015 19:21	WG808662
n-Nitrosodiphenylamine	ND		1.84	5	08/13/2015 19:21	WG808662
n-Nitrosodi-n-propylamine	ND		1.84	5	08/13/2015 19:21	WG808662
Phenanthrene	ND		0.182	5	08/13/2015 19:21	WG808662
Benzylbutyl phthalate	ND		1.84	5	08/13/2015 19:21	WG808662
Bis(2-ethylhexyl)phthalate	ND		1.84	5	08/13/2015 19:21	WG808662
Di-n-butyl phthalate	ND		1.84	5	08/13/2015 19:21	WG808662
Diethyl phthalate	ND		1.84	5	08/13/2015 19:21	WG808662
Dimethyl phthalate	ND		1.84	5	08/13/2015 19:21	WG808662
Di-n-octyl phthalate	ND		1.84	5	08/13/2015 19:21	WG808662
Pyrene	ND		0.182	5	08/13/2015 19:21	WG808662
1,2,4-Trichlorobenzene	ND		1.84	5	08/13/2015 19:21	WG808662
4-Chloro-3-methylphenol	ND		1.84	5	08/13/2015 19:21	WG808662
2-Chlorophenol	ND		1.84	5	08/13/2015 19:21	WG808662
2,4-Dichlorophenol	ND		1.84	5	08/13/2015 19:21	WG808662
2,4-Dimethylphenol	ND		1.84	5	08/13/2015 19:21	WG808662
4,6-Dinitro-2-methylphenol	ND		1.84	5	08/13/2015 19:21	WG808662
2,4-Dinitrophenol	ND		1.84	5	08/13/2015 19:21	WG808662
2-Nitrophenol	ND		1.84	5	08/13/2015 19:21	WG808662
4-Nitrophenol	ND		1.84	5	08/13/2015 19:21	WG808662
Pentachlorophenol	ND		1.84	5	08/13/2015 19:21	WG808662
Phenol	ND		1.84	5	08/13/2015 19:21	WG808662
2,4,6-Trichlorophenol	ND		1.84	5	08/13/2015 19:21	WG808662
(S) 2-Fluorophenol	*67.2*		*21.1-116*		*08/13/2015 19:21*	WG808662
(S) Phenol-d5	*70.8*		*26.3-121*		*08/13/2015 19:21*	WG808662
(S) Nitrobenzene-d5	*77.4*		*21.9-129*		*08/13/2015 19:21*	WG808662
(S) 2-Fluorobiphenyl	*68.4*		*34.9-129*		*08/13/2015 19:21*	WG808662
(S) 2,4,6-Tribromophenol	*79.5*		*21.6-142*		*08/13/2015 19:21*	WG808662
(S) p-Terphenyl-d14	*60.1*		*21.5-128*		*08/13/2015 19:21*	WG808662

Sample Narrative:

8270C L782221-09 WG808662: Dilution due to matrix

Total Solids by Method 2540 G-2011

Analyte	Result %	Qualifier	Dilution	Analysis date / time	Batch
Total Solids	87.6		1	08/13/2015 07:18	WG808614

Volatile Organic Compounds (GC/MS) by Method 8260B

Analyte	Result (dry) mg/kg	Qualifier	RDL (dry) mg/kg	Dilution	Analysis date / time	Batch
Acetone	ND		0.285	5	08/13/2015 02:54	WG808624
Acrylonitrile	ND		0.0571	5	08/13/2015 02:54	WG808624
Benzene	ND		0.00571	5	08/13/2015 02:54	WG808624
Bromobenzene	ND		0.00571	5	08/13/2015 02:54	WG808624
Bromodichloromethane	ND		0.00571	5	08/13/2015 02:54	WG808624
Bromoform	ND		0.00571	5	08/13/2015 02:54	WG808624
Bromomethane	ND		0.0285	5	08/13/2015 02:54	WG808624
n-Butylbenzene	0.0170		0.00571	5	08/13/2015 02:54	WG808624
sec-Butylbenzene	0.00822		0.00571	5	08/13/2015 02:54	WG808624
tert-Butylbenzene	ND		0.00571	5	08/13/2015 02:54	WG808624
Carbon tetrachloride	ND		0.00571	5	08/13/2015 02:54	WG808624
Chlorobenzene	ND		0.00571	5	08/13/2015 02:54	WG808624
Chlorodibromomethane	ND		0.00571	5	08/13/2015 02:54	WG808624
Chloroethane	ND		0.0285	5	08/13/2015 02:54	WG808624
2-Chloroethyl vinyl ether	ND		0.285	5	08/13/2015 02:54	WG808624
Chloroform	ND		0.0285	5	08/13/2015 02:54	WG808624
Chloromethane	ND		0.0143	5	08/13/2015 02:54	WG808624
2-Chlorotoluene	ND		0.00571	5	08/13/2015 02:54	WG808624
4-Chlorotoluene	ND		0.00571	5	08/13/2015 02:54	WG808624
1,2-Dibromo-3-Chloropropane	ND		0.0285	5	08/13/2015 02:54	WG808624
1,2-Dibromoethane	ND		0.00571	5	08/13/2015 02:54	WG808624
Dibromomethane	ND		0.00571	5	08/13/2015 02:54	WG808624
1,2-Dichlorobenzene	ND		0.00571	5	08/13/2015 02:54	WG808624
1,3-Dichlorobenzene	ND		0.00571	5	08/13/2015 02:54	WG808624
1,4-Dichlorobenzene	ND		0.00571	5	08/13/2015 02:54	WG808624
Dichlorodifluoromethane	ND		0.0285	5	08/13/2015 02:54	WG808624
1,1-Dichloroethane	ND		0.00571	5	08/13/2015 02:54	WG808624
1,2-Dichloroethane	ND		0.00571	5	08/13/2015 02:54	WG808624
1,1-Dichloroethene	ND		0.00571	5	08/13/2015 02:54	WG808624
cis-1,2-Dichloroethene	ND		0.00571	5	08/13/2015 02:54	WG808624
trans-1,2-Dichloroethene	ND		0.00571	5	08/13/2015 02:54	WG808624
1,2-Dichloropropane	ND		0.00571	5	08/13/2015 02:54	WG808624
1,1-Dichloropropene	ND		0.00571	5	08/13/2015 02:54	WG808624
1,3-Dichloropropane	ND		0.00571	5	08/13/2015 02:54	WG808624
cis-1,3-Dichloropropene	ND		0.00571	5	08/13/2015 02:54	WG808624
trans-1,3-Dichloropropene	ND		0.00571	5	08/13/2015 02:54	WG808624
2,2-Dichloropropane	ND		0.00571	5	08/13/2015 02:54	WG808624
Dicyclopentadiene	0.634		0.00571	5	08/13/2015 02:54	WG808624
Di-isopropyl ether	ND		0.00571	5	08/13/2015 02:54	WG808624
Ethylbenzene	0.0240		0.00571	5	08/13/2015 02:54	WG808624
Hexachloro-1,3-butadiene	ND		0.00571	5	08/13/2015 02:54	WG808624
Isopropylbenzene	0.0376		0.00571	5	08/13/2015 02:54	WG808624
p-Isopropyltoluene	ND		0.00571	5	08/13/2015 02:54	WG808624
2-Butanone (MEK)	ND		0.0571	5	08/13/2015 02:54	WG808624
Methylene Chloride	ND		0.0285	5	08/13/2015 02:54	WG808624
4-Methyl-2-pentanone (MIBK)	ND		0.0571	5	08/13/2015 02:54	WG808624
Methyl tert-butyl ether	ND		0.00571	5	08/13/2015 02:54	WG808624
Naphthalene	0.456		0.0285	5	08/13/2015 02:54	WG808624
n-Propylbenzene	0.171		0.00571	5	08/13/2015 02:54	WG808624
Styrene	ND		0.00571	5	08/13/2015 02:54	WG808624

Volatile Organic Compounds (GC/MS) by Method 8260B

Analyte	Result (dry) mg/kg	Qualifier	RDL (dry) mg/kg	Dilution	Analysis date / time	Batch
1,1,1,2-Tetrachloroethane	ND		0.00571	5	08/13/2015 02:54	WG808624
1,1,2,2-Tetrachloroethane	ND		0.00571	5	08/13/2015 02:54	WG808624
1,1,2-Trichlorotrifluoroethane	ND		0.00571	5	08/13/2015 02:54	WG808624
Tetrachloroethene	ND		0.00571	5	08/13/2015 02:54	WG808624
Toluene	ND		0.0285	5	08/13/2015 02:54	WG808624
1,2,3-Trichlorobenzene	ND		0.00571	5	08/13/2015 02:54	WG808624
1,2,4-Trichlorobenzene	ND		0.00571	5	08/13/2015 02:54	WG808624
1,1,1-Trichloroethane	ND		0.00571	5	08/13/2015 02:54	WG808624
1,1,2-Trichloroethane	ND		0.00571	5	08/13/2015 02:54	WG808624
Trichloroethene	ND		0.00571	5	08/13/2015 02:54	WG808624
Trichlorofluoromethane	ND		0.0285	5	08/13/2015 02:54	WG808624
1,2,3-Trichloropropane	ND		0.0143	5	08/13/2015 02:54	WG808624
1,2,4-Trimethylbenzene	0.0169		0.00571	5	08/13/2015 02:54	WG808624
1,2,3-Trimethylbenzene	0.0149		0.00571	5	08/13/2015 02:54	WG808624
1,3,5-Trimethylbenzene	ND		0.00571	5	08/13/2015 02:54	WG808624
Vinyl chloride	ND		0.00571	5	08/13/2015 02:54	WG808624
Xylenes, Total	ND		0.0171	5	08/13/2015 02:54	WG808624
(S) Toluene-d8	*102*		*88.7-115*		*08/13/2015 02:54*	WG808624
(S) Dibromofluoromethane	*93.4*		*76.3-123*		*08/13/2015 02:54*	WG808624
(S) 4-Bromofluorobenzene	*102*		*69.7-129*		*08/13/2015 02:54*	WG808624

Semi Volatile Organic Compounds (GC/MS) by Method 8270C

Analyte	Result (dry) mg/kg	Qualifier	RDL (dry) mg/kg	Dilution	Analysis date / time	Batch
Acenaphthene	ND		0.188	5	08/13/2015 17:50	WG808662
Acenaphthylene	ND		0.188	5	08/13/2015 17:50	WG808662
Anthracene	ND		0.188	5	08/13/2015 17:50	WG808662
Benzidine	ND		1.90	5	08/13/2015 17:50	WG808662
Benzo(a)anthracene	ND		0.188	5	08/13/2015 17:50	WG808662
Benzo(b)fluoranthene	ND		0.188	5	08/13/2015 17:50	WG808662
Benzo(k)fluoranthene	ND		0.188	5	08/13/2015 17:50	WG808662
Benzo(g,h,i)perylene	ND		0.188	5	08/13/2015 17:50	WG808662
Benzo(a)pyrene	ND		0.188	5	08/13/2015 17:50	WG808662
Bis(2-chlorethoxy)methane	ND		1.90	5	08/13/2015 17:50	WG808662
Bis(2-chloroethyl)ether	ND		1.90	5	08/13/2015 17:50	WG808662
Bis(2-chloroisopropyl)ether	ND		1.90	5	08/13/2015 17:50	WG808662
4-Bromophenyl-phenylether	ND		1.90	5	08/13/2015 17:50	WG808662
2-Chloronaphthalene	ND		0.188	5	08/13/2015 17:50	WG808662
4-Chlorophenyl-phenylether	ND		1.90	5	08/13/2015 17:50	WG808662
Chrysene	ND		0.188	5	08/13/2015 17:50	WG808662
Dibenz(a,h)anthracene	ND		0.188	5	08/13/2015 17:50	WG808662
3,3-Dichlorobenzidine	ND		1.90	5	08/13/2015 17:50	WG808662
2,4-Dinitrotoluene	ND		1.90	5	08/13/2015 17:50	WG808662
2,6-Dinitrotoluene	ND		1.90	5	08/13/2015 17:50	WG808662
Fluoranthene	ND		0.188	5	08/13/2015 17:50	WG808662
Fluorene	ND		0.188	5	08/13/2015 17:50	WG808662
Hexachlorobenzene	ND		1.90	5	08/13/2015 17:50	WG808662
Hexachloro-1,3-butadiene	ND		1.90	5	08/13/2015 17:50	WG808662
Hexachlorocyclopentadiene	ND		1.90	5	08/13/2015 17:50	WG808662
Hexachloroethane	ND		1.90	5	08/13/2015 17:50	WG808662
Indeno(1,2,3-cd)pyrene	ND		0.188	5	08/13/2015 17:50	WG808662
Isophorone	ND		1.90	5	08/13/2015 17:50	WG808662
Naphthalene	3.32		0.188	5	08/13/2015 17:50	WG808662
Nitrobenzene	ND		1.90	5	08/13/2015 17:50	WG808662
n-Nitrosodimethylamine	ND		1.90	5	08/13/2015 17:50	WG808662
n-Nitrosodiphenylamine	ND		1.90	5	08/13/2015 17:50	WG808662

Semi Volatile Organic Compounds (GC/MS) by Method 8270C

Analyte	Result (dry) mg/kg	Qualifier	RDL (dry) mg/kg	Dilution	Analysis date / time	Batch
n-Nitrosodi-n-propylamine	ND		1.90	5	08/13/2015 17:50	WG808662
Phenanthrene	ND		0.188	5	08/13/2015 17:50	WG808662
Benzylbutyl phthalate	ND		1.90	5	08/13/2015 17:50	WG808662
Bis(2-ethylhexyl)phthalate	ND		1.90	5	08/13/2015 17:50	WG808662
Di-n-butyl phthalate	ND		1.90	5	08/13/2015 17:50	WG808662
Diethyl phthalate	ND		1.90	5	08/13/2015 17:50	WG808662
Dimethyl phthalate	ND		1.90	5	08/13/2015 17:50	WG808662
Di-n-octyl phthalate	ND		1.90	5	08/13/2015 17:50	WG808662
Pyrene	ND		0.188	5	08/13/2015 17:50	WG808662
1,2,4-Trichlorobenzene	ND		1.90	5	08/13/2015 17:50	WG808662
4-Chloro-3-methylphenol	ND		1.90	5	08/13/2015 17:50	WG808662
2-Chlorophenol	ND		1.90	5	08/13/2015 17:50	WG808662
2,4-Dichlorophenol	ND		1.90	5	08/13/2015 17:50	WG808662
2,4-Dimethylphenol	ND		1.90	5	08/13/2015 17:50	WG808662
4,6-Dinitro-2-methylphenol	ND		1.90	5	08/13/2015 17:50	WG808662
2,4-Dinitrophenol	ND		1.90	5	08/13/2015 17:50	WG808662
2-Nitrophenol	ND		1.90	5	08/13/2015 17:50	WG808662
4-Nitrophenol	ND		1.90	5	08/13/2015 17:50	WG808662
Pentachlorophenol	ND		1.90	5	08/13/2015 17:50	WG808662
Phenol	ND		1.90	5	08/13/2015 17:50	WG808662
2,4,6-Trichlorophenol	ND		1.90	5	08/13/2015 17:50	WG808662
(S) 2-Fluorophenol	*70.0*		*21.1-116*		*08/13/2015 17:50*	WG808662
(S) Phenol-d5	*69.6*		*26.3-121*		*08/13/2015 17:50*	WG808662
(S) Nitrobenzene-d5	*68.2*		*21.9-129*		*08/13/2015 17:50*	WG808662
(S) 2-Fluorobiphenyl	*69.3*		*34.9-129*		*08/13/2015 17:50*	WG808662
(S) 2,4,6-Tribromophenol	*88.2*		*21.6-142*		*08/13/2015 17:50*	WG808662
(S) p-Terphenyl-d14	*69.3*		*21.5-128*		*08/13/2015 17:50*	WG808662

Sample Narrative:

8270C L782221-10 WG808662: Dilution due to matrix

Total Solids by Method 2540 G-2011

Analyte	Result %	Qualifier	Dilution	Analysis date / time	Batch
Total Solids	85.5		1	08/13/2015 07:18	WG808614

Mercury by Method 7471A

Analyte	Result (dry) mg/kg	Qualifier	RDL (dry) mg/kg	Dilution	Analysis date / time	Batch
Mercury	0.0587		0.0234	1	08/13/2015 12:51	WG808666

Metals (ICP) by Method 6010B

Analyte	Result (dry) mg/kg	Qualifier	RDL (dry) mg/kg	Dilution	Analysis date / time	Batch
Arsenic	ND		2.34	1	08/13/2015 04:47	WG808635
Barium	36.0		0.585	1	08/13/2015 04:47	WG808635
Cadmium	ND		0.585	1	08/13/2015 04:47	WG808635
Chromium	14.3		1.17	1	08/13/2015 04:47	WG808635
Lead	9.79		0.585	1	08/13/2015 04:47	WG808635
Selenium	ND		2.34	1	08/13/2015 04:47	WG808635
Silver	ND		1.17	1	08/13/2015 04:47	WG808635

Volatile Organic Compounds (GC/MS) by Method 8260B

Analyte	Result (dry) mg/kg	Qualifier	RDL (dry) mg/kg	Dilution	Analysis date / time	Batch
Acetone	ND		11.7	200	08/13/2015 03:48	WG808625
Acrylonitrile	ND		2.34	200	08/13/2015 03:48	WG808625
Benzene	ND		0.234	200	08/13/2015 03:48	WG808625
Bromobenzene	ND		0.234	200	08/13/2015 03:48	WG808625
Bromodichloromethane	ND		0.234	200	08/13/2015 03:48	WG808625
Bromoform	ND		0.234	200	08/13/2015 03:48	WG808625
Bromomethane	ND		1.17	200	08/13/2015 03:48	WG808625
n-Butylbenzene	ND		0.234	200	08/13/2015 03:48	WG808625
sec-Butylbenzene	ND		0.234	200	08/13/2015 03:48	WG808625
tert-Butylbenzene	ND		0.234	200	08/13/2015 03:48	WG808625
Carbon tetrachloride	ND		0.234	200	08/13/2015 03:48	WG808625
Chlorobenzene	ND		0.234	200	08/13/2015 03:48	WG808625
Chlorodibromomethane	ND		0.234	200	08/13/2015 03:48	WG808625
Chloroethane	ND		1.17	200	08/13/2015 03:48	WG808625
2-Chloroethyl vinyl ether	ND		11.7	200	08/13/2015 03:48	WG808625
Chloroform	ND		1.17	200	08/13/2015 03:48	WG808625
Chloromethane	ND		0.585	200	08/13/2015 03:48	WG808625
2-Chlorotoluene	ND		0.234	200	08/13/2015 03:48	WG808625
4-Chlorotoluene	ND		0.234	200	08/13/2015 03:48	WG808625
1,2-Dibromo-3-Chloropropane	ND		1.17	200	08/13/2015 03:48	WG808625
1,2-Dibromoethane	ND		0.234	200	08/13/2015 03:48	WG808625
Dibromomethane	ND		0.234	200	08/13/2015 03:48	WG808625
1,2-Dichlorobenzene	ND	J4	0.234	200	08/13/2015 03:48	WG808625
1,3-Dichlorobenzene	ND		0.234	200	08/13/2015 03:48	WG808625
1,4-Dichlorobenzene	ND	J4	0.234	200	08/13/2015 03:48	WG808625
Dichlorodifluoromethane	ND		1.17	200	08/13/2015 03:48	WG808625
1,1-Dichloroethane	ND		0.234	200	08/13/2015 03:48	WG808625
1,2-Dichloroethane	ND		0.234	200	08/13/2015 03:48	WG808625
1,1-Dichloroethene	ND		0.234	200	08/13/2015 03:48	WG808625
cis-1,2-Dichloroethene	ND		0.234	200	08/13/2015 03:48	WG808625
trans-1,2-Dichloroethene	ND		0.234	200	08/13/2015 03:48	WG808625
1,2-Dichloropropane	ND		0.234	200	08/13/2015 03:48	WG808625
1,1-Dichloropropene	ND		0.234	200	08/13/2015 03:48	WG808625

Volatile Organic Compounds (GC/MS) by Method 8260B

Analyte	Result (dry) mg/kg	Qualifier	RDL (dry) mg/kg	Dilution	Analysis date / time	Batch
1,3-Dichloropropane	ND	J4	0.234	200	08/13/2015 03:48	WG808625
cis-1,3-Dichloropropene	ND		0.234	200	08/13/2015 03:48	WG808625
trans-1,3-Dichloropropene	ND		0.234	200	08/13/2015 03:48	WG808625
2,2-Dichloropropane	ND		0.234	200	08/13/2015 03:48	WG808625
Dicyclopentadiene	15.1		0.234	200	08/13/2015 03:48	WG808625
Di-isopropyl ether	ND		0.234	200	08/13/2015 03:48	WG808625
Ethylbenzene	0.412		0.234	200	08/13/2015 03:48	WG808625
Hexachloro-1,3-butadiene	ND		0.234	200	08/13/2015 03:48	WG808625
Isopropylbenzene	ND		0.234	200	08/13/2015 03:48	WG808625
p-Isopropyltoluene	ND		0.234	200	08/13/2015 03:48	WG808625
2-Butanone (MEK)	ND		2.34	200	08/13/2015 03:48	WG808625
Methylene Chloride	ND		1.17	200	08/13/2015 03:48	WG808625
4-Methyl-2-pentanone (MIBK)	ND		2.34	200	08/13/2015 03:48	WG808625
Methyl tert-butyl ether	ND		0.234	200	08/13/2015 03:48	WG808625
Naphthalene	4.55		1.17	200	08/13/2015 03:48	WG808625
n-Propylbenzene	0.724		0.234	200	08/13/2015 03:48	WG808625
Styrene	ND		0.234	200	08/13/2015 03:48	WG808625
1,1,1,2-Tetrachloroethane	ND		0.234	200	08/13/2015 03:48	WG808625
1,1,2,2-Tetrachloroethane	ND		0.234	200	08/13/2015 03:48	WG808625
1,1,2-Trichlorotrifluoroethane	ND		0.234	200	08/13/2015 03:48	WG808625
Tetrachloroethene	ND		0.234	200	08/13/2015 03:48	WG808625
Toluene	ND		1.17	200	08/13/2015 03:48	WG808625
1,2,3-Trichlorobenzene	ND		0.234	200	08/13/2015 03:48	WG808625
1,2,4-Trichlorobenzene	ND		0.234	200	08/13/2015 03:48	WG808625
1,1,1-Trichloroethane	ND		0.234	200	08/13/2015 03:48	WG808625
1,1,2-Trichloroethane	ND		0.234	200	08/13/2015 03:48	WG808625
Trichloroethene	ND		0.234	200	08/13/2015 03:48	WG808625
Trichlorofluoromethane	ND		1.17	200	08/13/2015 03:48	WG808625
1,2,3-Trichloropropane	ND		0.585	200	08/13/2015 03:48	WG808625
1,2,4-Trimethylbenzene	4.37		0.234	200	08/13/2015 03:48	WG808625
1,2,3-Trimethylbenzene	2.32		0.234	200	08/13/2015 03:48	WG808625
1,3,5-Trimethylbenzene	1.95		0.234	200	08/13/2015 03:48	WG808625
Vinyl chloride	ND		0.234	200	08/13/2015 03:48	WG808625
Xylenes, Total	0.778		0.702	200	08/13/2015 03:48	WG808625
(S) Toluene-d8	*106*		*88.7-115*		*08/13/2015 03:48*	WG808625
(S) Dibromofluoromethane	*101*		*76.3-123*		*08/13/2015 03:48*	WG808625
(S) 4-Bromofluorobenzene	*97.2*		*69.7-129*		*08/13/2015 03:48*	WG808625

Sample Narrative:

8260B L782221-11 WG808625: Non-target compounds too high to run at a lower dilution.

Semi Volatile Organic Compounds (GC/MS) by Method 8270C

Analyte	Result (dry) mg/kg	Qualifier	RDL (dry) mg/kg	Dilution	Analysis date / time	Batch
Acenaphthene	ND		0.193	5	08/13/2015 17:03	WG808662
Acenaphthylene	ND		0.193	5	08/13/2015 17:03	WG808662
Anthracene	ND		0.193	5	08/13/2015 17:03	WG808662
Benzidine	ND		1.95	5	08/13/2015 17:03	WG808662
Benzo(a)anthracene	ND		0.193	5	08/13/2015 17:03	WG808662
Benzo(b)fluoranthene	ND		0.193	5	08/13/2015 17:03	WG808662
Benzo(k)fluoranthene	ND		0.193	5	08/13/2015 17:03	WG808662
Benzo(g,h,i)perylene	ND		0.193	5	08/13/2015 17:03	WG808662
Benzo(a)pyrene	ND		0.193	5	08/13/2015 17:03	WG808662
Bis(2-chlorethoxy)methane	ND		1.95	5	08/13/2015 17:03	WG808662
Bis(2-chloroethyl)ether	ND		1.95	5	08/13/2015 17:03	WG808662
Bis(2-chloroisopropyl)ether	ND		1.95	5	08/13/2015 17:03	WG808662

Semi Volatile Organic Compounds (GC/MS) by Method 8270C

Analyte	Result (dry) mg/kg	Qualifier	RDL (dry) mg/kg	Dilution	Analysis date / time	Batch
4-Bromophenyl-phenylether	ND		1.95	5	08/13/2015 17:03	WG808662
2-Chloronaphthalene	ND		0.193	5	08/13/2015 17:03	WG808662
4-Chlorophenyl-phenylether	ND		1.95	5	08/13/2015 17:03	WG808662
Chrysene	ND		0.193	5	08/13/2015 17:03	WG808662
Dibenz(a,h)anthracene	ND		0.193	5	08/13/2015 17:03	WG808662
3,3-Dichlorobenzidine	ND		1.95	5	08/13/2015 17:03	WG808662
2,4-Dinitrotoluene	ND		1.95	5	08/13/2015 17:03	WG808662
2,6-Dinitrotoluene	ND		1.95	5	08/13/2015 17:03	WG808662
Fluoranthene	ND		0.193	5	08/13/2015 17:03	WG808662
Fluorene	ND		0.193	5	08/13/2015 17:03	WG808662
Hexachlorobenzene	ND		1.95	5	08/13/2015 17:03	WG808662
Hexachloro-1,3-butadiene	ND		1.95	5	08/13/2015 17:03	WG808662
Hexachlorocyclopentadiene	ND		1.95	5	08/13/2015 17:03	WG808662
Hexachloroethane	ND		1.95	5	08/13/2015 17:03	WG808662
Indeno(1,2,3-cd)pyrene	ND		0.193	5	08/13/2015 17:03	WG808662
Isophorone	ND		1.95	5	08/13/2015 17:03	WG808662
Naphthalene	11.4		0.386	10	08/14/2015 10:51	WG808662
Nitrobenzene	ND		1.95	5	08/13/2015 17:03	WG808662
n-Nitrosodimethylamine	ND		1.95	5	08/13/2015 17:03	WG808662
n-Nitrosodiphenylamine	ND		1.95	5	08/13/2015 17:03	WG808662
n-Nitrosodi-n-propylamine	ND		1.95	5	08/13/2015 17:03	WG808662
Phenanthrene	ND		0.193	5	08/13/2015 17:03	WG808662
Benzylbutyl phthalate	ND		1.95	5	08/13/2015 17:03	WG808662
Bis(2-ethylhexyl)phthalate	ND		1.95	5	08/13/2015 17:03	WG808662
Di-n-butyl phthalate	ND		1.95	5	08/13/2015 17:03	WG808662
Diethyl phthalate	ND		1.95	5	08/13/2015 17:03	WG808662
Dimethyl phthalate	ND		1.95	5	08/13/2015 17:03	WG808662
Di-n-octyl phthalate	ND		1.95	5	08/13/2015 17:03	WG808662
Pyrene	ND		0.193	5	08/13/2015 17:03	WG808662
1,2,4-Trichlorobenzene	ND		1.95	5	08/13/2015 17:03	WG808662
4-Chloro-3-methylphenol	ND		1.95	5	08/13/2015 17:03	WG808662
2-Chlorophenol	ND		1.95	5	08/13/2015 17:03	WG808662
2,4-Dichlorophenol	ND		1.95	5	08/13/2015 17:03	WG808662
2,4-Dimethylphenol	ND		1.95	5	08/13/2015 17:03	WG808662
4,6-Dinitro-2-methylphenol	ND		1.95	5	08/13/2015 17:03	WG808662
2,4-Dinitrophenol	ND		1.95	5	08/13/2015 17:03	WG808662
2-Nitrophenol	ND		1.95	5	08/13/2015 17:03	WG808662
4-Nitrophenol	ND		1.95	5	08/13/2015 17:03	WG808662
Pentachlorophenol	ND		1.95	5	08/13/2015 17:03	WG808662
Phenol	ND		1.95	5	08/13/2015 17:03	WG808662
2,4,6-Trichlorophenol	ND		1.95	5	08/13/2015 17:03	WG808662
(S) 2-Fluorophenol	*78.3*		*21.1-116*		*08/13/2015 17:03*	WG808662
(S) Phenol-d5	*83.4*		*26.3-121*		*08/13/2015 17:03*	WG808662
(S) Nitrobenzene-d5	*104*		*21.9-129*		*08/13/2015 17:03*	WG808662
(S) 2-Fluorobiphenyl	*78.5*		*34.9-129*		*08/13/2015 17:03*	WG808662
(S) 2,4,6-Tribromophenol	*86.7*		*21.6-142*		*08/13/2015 17:03*	WG808662
(S) p-Terphenyl-d14	*72.6*		*21.5-128*		*08/13/2015 17:03*	WG808662

Sample Narrative:

8270C L782221-11 WG808662: Dilution due to matrix

Total Solids by Method 2540 G-2011

Analyte	Result %	Qualifier	Dilution	Analysis date / time	Batch
Total Solids	86.9		1	08/13/2015 07:19	WG808614

Volatile Organic Compounds (GC/MS) by Method 8260B

Analyte	Result (dry) mg/kg	Qualifier	RDL (dry) mg/kg	Dilution	Analysis date / time	Batch
Acetone	ND		28.8	500	08/13/2015 04:08	WG808625
Acrylonitrile	ND		5.75	500	08/13/2015 04:08	WG808625
Benzene	ND		0.575	500	08/13/2015 04:08	WG808625
Bromobenzene	ND		0.575	500	08/13/2015 04:08	WG808625
Bromodichloromethane	ND		0.575	500	08/13/2015 04:08	WG808625
Bromoform	ND		0.575	500	08/13/2015 04:08	WG808625
Bromomethane	ND		2.88	500	08/13/2015 04:08	WG808625
n-Butylbenzene	ND		0.575	500	08/13/2015 04:08	WG808625
sec-Butylbenzene	ND		0.575	500	08/13/2015 04:08	WG808625
tert-Butylbenzene	ND		0.575	500	08/13/2015 04:08	WG808625
Carbon tetrachloride	ND		0.575	500	08/13/2015 04:08	WG808625
Chlorobenzene	ND		0.575	500	08/13/2015 04:08	WG808625
Chlorodibromomethane	ND		0.575	500	08/13/2015 04:08	WG808625
Chloroethane	ND		2.88	500	08/13/2015 04:08	WG808625
2-Chloroethyl vinyl ether	ND		28.8	500	08/13/2015 04:08	WG808625
Chloroform	ND		2.88	500	08/13/2015 04:08	WG808625
Chloromethane	ND		1.44	500	08/13/2015 04:08	WG808625
2-Chlorotoluene	ND		0.575	500	08/13/2015 04:08	WG808625
4-Chlorotoluene	ND		0.575	500	08/13/2015 04:08	WG808625
1,2-Dibromo-3-Chloropropane	ND		2.88	500	08/13/2015 04:08	WG808625
1,2-Dibromoethane	ND		0.575	500	08/13/2015 04:08	WG808625
Dibromomethane	ND		0.575	500	08/13/2015 04:08	WG808625
1,2-Dichlorobenzene	ND	J4	0.575	500	08/13/2015 04:08	WG808625
1,3-Dichlorobenzene	ND		0.575	500	08/13/2015 04:08	WG808625
1,4-Dichlorobenzene	ND	J4	0.575	500	08/13/2015 04:08	WG808625
Dichlorodifluoromethane	ND		2.88	500	08/13/2015 04:08	WG808625
1,1-Dichloroethane	ND		0.575	500	08/13/2015 04:08	WG808625
1,2-Dichloroethane	ND		0.575	500	08/13/2015 04:08	WG808625
1,1-Dichloroethene	ND		0.575	500	08/13/2015 04:08	WG808625
cis-1,2-Dichloroethene	ND		0.575	500	08/13/2015 04:08	WG808625
trans-1,2-Dichloroethene	ND		0.575	500	08/13/2015 04:08	WG808625
1,2-Dichloropropane	ND		0.575	500	08/13/2015 04:08	WG808625
1,1-Dichloropropene	ND		0.575	500	08/13/2015 04:08	WG808625
1,3-Dichloropropane	ND	J4	0.575	500	08/13/2015 04:08	WG808625
cis-1,3-Dichloropropene	ND		0.575	500	08/13/2015 04:08	WG808625
trans-1,3-Dichloropropene	ND		0.575	500	08/13/2015 04:08	WG808625
2,2-Dichloropropane	ND		0.575	500	08/13/2015 04:08	WG808625
Dicyclopentadiene	34.9		0.575	500	08/13/2015 04:08	WG808625
Di-isopropyl ether	ND		0.575	500	08/13/2015 04:08	WG808625
Ethylbenzene	2.50		0.575	500	08/13/2015 04:08	WG808625
Hexachloro-1,3-butadiene	ND		0.575	500	08/13/2015 04:08	WG808625
Isopropylbenzene	1.10		0.575	500	08/13/2015 04:08	WG808625
p-Isopropyltoluene	2.36		0.575	500	08/13/2015 04:08	WG808625
2-Butanone (MEK)	ND		5.75	500	08/13/2015 04:08	WG808625
Methylene Chloride	ND		2.88	500	08/13/2015 04:08	WG808625
4-Methyl-2-pentanone (MIBK)	ND		5.75	500	08/13/2015 04:08	WG808625
Methyl tert-butyl ether	ND		0.575	500	08/13/2015 04:08	WG808625
Naphthalene	18.2		2.88	500	08/13/2015 04:08	WG808625
n-Propylbenzene	6.23		0.575	500	08/13/2015 04:08	WG808625
Styrene	ND		0.575	500	08/13/2015 04:08	WG808625

Volatile Organic Compounds (GC/MS) by Method 8260B

Analyte	Result (dry) mg/kg	Qualifier	RDL (dry) mg/kg	Dilution	Analysis date / time	Batch
1,1,1,2-Tetrachloroethane	ND		0.575	500	08/13/2015 04:08	WG808625
1,1,2,2-Tetrachloroethane	ND		0.575	500	08/13/2015 04:08	WG808625
1,1,2-Trichlorotrifluoroethane	ND		0.575	500	08/13/2015 04:08	WG808625
Tetrachloroethene	ND		0.575	500	08/13/2015 04:08	WG808625
Toluene	ND		2.88	500	08/13/2015 04:08	WG808625
1,2,3-Trichlorobenzene	ND		0.575	500	08/13/2015 04:08	WG808625
1,2,4-Trichlorobenzene	ND		0.575	500	08/13/2015 04:08	WG808625
1,1,1-Trichloroethane	ND		0.575	500	08/13/2015 04:08	WG808625
1,1,2-Trichloroethane	ND		0.575	500	08/13/2015 04:08	WG808625
Trichloroethene	ND		0.575	500	08/13/2015 04:08	WG808625
Trichlorofluoromethane	ND		2.88	500	08/13/2015 04:08	WG808625
1,2,3-Trichloropropane	ND		1.44	500	08/13/2015 04:08	WG808625
1,2,4-Trimethylbenzene	52.6		0.575	500	08/13/2015 04:08	WG808625
1,2,3-Trimethylbenzene	20.9		0.575	500	08/13/2015 04:08	WG808625
1,3,5-Trimethylbenzene	20.2		0.575	500	08/13/2015 04:08	WG808625
Vinyl chloride	ND		0.575	500	08/13/2015 04:08	WG808625
Xylenes, Total	7.28		1.73	500	08/13/2015 04:08	WG808625
(S) Toluene-d8	*106*		*88.7-115*		*08/13/2015 04:08*	WG808625
(S) Dibromofluoromethane	*103*		*76.3-123*		*08/13/2015 04:08*	WG808625
(S) 4-Bromofluorobenzene	*96.2*		*69.7-129*		*08/13/2015 04:08*	WG808625

Sample Narrative:

8260B L782221-12 WG808625: Non-target compounds too high to run at a lower dilution.

Semi Volatile Organic Compounds (GC/MS) by Method 8270C

Analyte	Result (dry) mg/kg	Qualifier	RDL (dry) mg/kg	Dilution	Analysis date / time	Batch
Acenaphthene	ND		0.0380	1	08/13/2015 13:57	WG808662
Acenaphthylene	ND	J3	0.0380	1	08/13/2015 13:57	WG808662
Anthracene	ND		0.0380	1	08/13/2015 13:57	WG808662
Benzidine	ND		0.383	1	08/13/2015 13:57	WG808662
Benzo(a)anthracene	ND	J3	0.0380	1	08/13/2015 13:57	WG808662
Benzo(b)fluoranthene	ND		0.0380	1	08/13/2015 13:57	WG808662
Benzo(k)fluoranthene	ND		0.0380	1	08/13/2015 13:57	WG808662
Benzo(g,h,i)perylene	ND	J3	0.0380	1	08/13/2015 13:57	WG808662
Benzo(a)pyrene	ND		0.0380	1	08/13/2015 13:57	WG808662
Bis(2-chlorethoxy)methane	ND		0.383	1	08/13/2015 13:57	WG808662
Bis(2-chloroethyl)ether	ND	J3	0.383	1	08/13/2015 13:57	WG808662
Bis(2-chloroisopropyl)ether	ND		0.383	1	08/13/2015 13:57	WG808662
4-Bromophenyl-phenylether	ND	J3	0.383	1	08/13/2015 13:57	WG808662
2-Chloronaphthalene	ND	J3	0.0380	1	08/13/2015 13:57	WG808662
4-Chlorophenyl-phenylether	ND	J3	0.383	1	08/13/2015 13:57	WG808662
Chrysene	ND	J3	0.0380	1	08/13/2015 13:57	WG808662
Dibenz(a,h)anthracene	ND	J3	0.0380	1	08/13/2015 13:57	WG808662
3,3-Dichlorobenzidine	ND	J3	0.383	1	08/13/2015 13:57	WG808662
2,4-Dinitrotoluene	ND	J3	0.383	1	08/13/2015 13:57	WG808662
2,6-Dinitrotoluene	ND	J3	0.383	1	08/13/2015 13:57	WG808662
Fluoranthene	ND	J3	0.0380	1	08/13/2015 13:57	WG808662
Fluorene	ND	J3	0.0380	1	08/13/2015 13:57	WG808662
Hexachlorobenzene	ND	J3	0.383	1	08/13/2015 13:57	WG808662
Hexachloro-1,3-butadiene	ND		0.383	1	08/13/2015 13:57	WG808662
Hexachlorocyclopentadiene	ND	J3 J6	0.383	1	08/13/2015 13:57	WG808662
Hexachloroethane	ND	J3	0.383	1	08/13/2015 13:57	WG808662
Indeno(1,2,3-cd)pyrene	ND	J3	0.0380	1	08/13/2015 13:57	WG808662
Isophorone	ND		0.383	1	08/13/2015 13:57	WG808662
Naphthalene	5.34	V	0.190	5	08/14/2015 09:41	WG808662

Semi Volatile Organic Compounds (GC/MS) by Method 8270C

Analyte	Result (dry) mg/kg	Qualifier	RDL (dry) mg/kg	Dilution	Analysis date / time	Batch
Nitrobenzene	ND		0.383	1	08/13/2015 13:57	WG808662
n-Nitrosodimethylamine	ND		0.383	1	08/13/2015 13:57	WG808662
n-Nitrosodiphenylamine	ND	J3	0.383	1	08/13/2015 13:57	WG808662
n-Nitrosodi-n-propylamine	ND		0.383	1	08/13/2015 13:57	WG808662
Phenanthrene	ND	J3	0.0380	1	08/13/2015 13:57	WG808662
Benzylbutyl phthalate	ND		0.383	1	08/13/2015 13:57	WG808662
Bis(2-ethylhexyl)phthalate	ND		0.383	1	08/13/2015 13:57	WG808662
Di-n-butyl phthalate	ND	J3	0.383	1	08/13/2015 13:57	WG808662
Diethyl phthalate	ND	J3	0.383	1	08/13/2015 13:57	WG808662
Dimethyl phthalate	ND	J3	0.383	1	08/13/2015 13:57	WG808662
Di-n-octyl phthalate	ND		0.383	1	08/13/2015 13:57	WG808662
Pyrene	ND		0.0380	1	08/13/2015 13:57	WG808662
1,2,4-Trichlorobenzene	ND		0.383	1	08/13/2015 13:57	WG808662
4-Chloro-3-methylphenol	ND	J3	0.383	1	08/13/2015 13:57	WG808662
2-Chlorophenol	ND	J3	0.383	1	08/13/2015 13:57	WG808662
2,4-Dichlorophenol	ND		0.383	1	08/13/2015 13:57	WG808662
2,4-Dimethylphenol	ND	J3	0.383	1	08/13/2015 13:57	WG808662
4,6-Dinitro-2-methylphenol	ND	J3 J6	0.383	1	08/13/2015 13:57	WG808662
2,4-Dinitrophenol	ND	J6	0.383	1	08/13/2015 13:57	WG808662
2-Nitrophenol	ND	J3 J6	0.383	1	08/13/2015 13:57	WG808662
4-Nitrophenol	ND	J3	0.383	1	08/13/2015 13:57	WG808662
Pentachlorophenol	ND	J5	0.383	1	08/13/2015 13:57	WG808662
Phenol	ND	J3	0.383	1	08/13/2015 13:57	WG808662
2,4,6-Trichlorophenol	ND		0.383	1	08/13/2015 13:57	WG808662
(S) 2-Fluorophenol	*73.9*		*21.1-116*		*08/13/2015 13:57*	WG808662
(S) Phenol-d5	*81.6*		*26.3-121*		*08/13/2015 13:57*	WG808662
(S) Nitrobenzene-d5	*100*		*21.9-129*		*08/13/2015 13:57*	WG808662
(S) 2-Fluorobiphenyl	*77.5*		*34.9-129*		*08/13/2015 13:57*	WG808662
(S) 2,4,6-Tribromophenol	*93.0*		*21.6-142*		*08/13/2015 13:57*	WG808662
(S) p-Terphenyl-d14	*67.4*		*21.5-128*		*08/13/2015 13:57*	WG808662

Total Solids by Method 2540 G-2011

Analyte	Result %	Qualifier	Dilution	Analysis date / time	Batch
Total Solids	90.2		1	08/13/2015 07:19	WG808614

Mercury by Method 7471A

Analyte	Result (dry) mg/kg	Qualifier	RDL (dry) mg/kg	Dilution	Analysis date / time	Batch
Mercury	0.0269		0.0222	1	08/13/2015 12:54	WG808666

Metals (ICP) by Method 6010B

Analyte	Result (dry) mg/kg	Qualifier	RDL (dry) mg/kg	Dilution	Analysis date / time	Batch
Arsenic	ND		2.22	1	08/13/2015 04:50	WG808635
Barium	24.8		0.555	1	08/13/2015 04:50	WG808635
Cadmium	ND		0.555	1	08/13/2015 04:50	WG808635
Chromium	19.6		1.11	1	08/13/2015 04:50	WG808635
Lead	8.81		0.555	1	08/13/2015 04:50	WG808635
Selenium	ND		2.22	1	08/13/2015 04:50	WG808635
Silver	ND		1.11	1	08/13/2015 04:50	WG808635

Volatile Organic Compounds (GC/MS) by Method 8260B

Analyte	Result (dry) mg/kg	Qualifier	RDL (dry) mg/kg	Dilution	Analysis date / time	Batch
Acetone	ND		0.277	5	08/13/2015 04:29	WG808625
Acrylonitrile	ND		0.0555	5	08/13/2015 04:29	WG808625
Benzene	ND		0.00555	5	08/13/2015 04:29	WG808625
Bromobenzene	ND		0.00555	5	08/13/2015 04:29	WG808625
Bromodichloromethane	ND		0.00555	5	08/13/2015 04:29	WG808625
Bromoform	ND		0.00555	5	08/13/2015 04:29	WG808625
Bromomethane	ND		0.0277	5	08/13/2015 04:29	WG808625
n-Butylbenzene	ND		0.00555	5	08/13/2015 04:29	WG808625
sec-Butylbenzene	ND		0.00555	5	08/13/2015 04:29	WG808625
tert-Butylbenzene	ND		0.00555	5	08/13/2015 04:29	WG808625
Carbon tetrachloride	ND		0.00555	5	08/13/2015 04:29	WG808625
Chlorobenzene	ND		0.00555	5	08/13/2015 04:29	WG808625
Chlorodibromomethane	ND		0.00555	5	08/13/2015 04:29	WG808625
Chloroethane	ND		0.0277	5	08/13/2015 04:29	WG808625
2-Chloroethyl vinyl ether	ND		0.277	5	08/13/2015 04:29	WG808625
Chloroform	ND		0.0277	5	08/13/2015 04:29	WG808625
Chloromethane	ND		0.0139	5	08/13/2015 04:29	WG808625
2-Chlorotoluene	ND		0.00555	5	08/13/2015 04:29	WG808625
4-Chlorotoluene	ND		0.00555	5	08/13/2015 04:29	WG808625
1,2-Dibromo-3-Chloropropane	ND		0.0277	5	08/13/2015 04:29	WG808625
1,2-Dibromoethane	ND		0.00555	5	08/13/2015 04:29	WG808625
Dibromomethane	ND		0.00555	5	08/13/2015 04:29	WG808625
1,2-Dichlorobenzene	ND	J4	0.00555	5	08/13/2015 04:29	WG808625
1,3-Dichlorobenzene	ND		0.00555	5	08/13/2015 04:29	WG808625
1,4-Dichlorobenzene	ND	J4	0.00555	5	08/13/2015 04:29	WG808625
Dichlorodifluoromethane	ND		0.0277	5	08/13/2015 04:29	WG808625
1,1-Dichloroethane	ND		0.00555	5	08/13/2015 04:29	WG808625
1,2-Dichloroethane	ND		0.00555	5	08/13/2015 04:29	WG808625
1,1-Dichloroethene	ND		0.00555	5	08/13/2015 04:29	WG808625
cis-1,2-Dichloroethene	ND		0.00555	5	08/13/2015 04:29	WG808625
trans-1,2-Dichloroethene	ND		0.00555	5	08/13/2015 04:29	WG808625
1,2-Dichloropropane	ND		0.00555	5	08/13/2015 04:29	WG808625
1,1-Dichloropropene	ND		0.00555	5	08/13/2015 04:29	WG808625

Volatile Organic Compounds (GC/MS) by Method 8260B

Analyte	Result (dry) mg/kg	Qualifier	RDL (dry) mg/kg	Dilution	Analysis date / time	Batch
1,3-Dichloropropane	ND	J4	0.00555	5	08/13/2015 04:29	WG808625
cis-1,3-Dichloropropene	ND		0.00555	5	08/13/2015 04:29	WG808625
trans-1,3-Dichloropropene	ND		0.00555	5	08/13/2015 04:29	WG808625
2,2-Dichloropropane	ND		0.00555	5	08/13/2015 04:29	WG808625
Dicyclopentadiene	0.0610		0.00555	5	08/13/2015 04:29	WG808625
Di-isopropyl ether	ND		0.00555	5	08/13/2015 04:29	WG808625
Ethylbenzene	0.00918		0.00555	5	08/13/2015 04:29	WG808625
Hexachloro-1,3-butadiene	ND		0.00555	5	08/13/2015 04:29	WG808625
Isopropylbenzene	ND		0.00555	5	08/13/2015 04:29	WG808625
p-Isopropyltoluene	ND		0.00555	5	08/13/2015 04:29	WG808625
2-Butanone (MEK)	ND		0.0555	5	08/13/2015 04:29	WG808625
Methylene Chloride	ND		0.0277	5	08/13/2015 04:29	WG808625
4-Methyl-2-pentanone (MIBK)	ND		0.0555	5	08/13/2015 04:29	WG808625
Methyl tert-butyl ether	ND		0.00555	5	08/13/2015 04:29	WG808625
Naphthalene	0.0878		0.0277	5	08/13/2015 04:29	WG808625
n-Propylbenzene	ND		0.00555	5	08/13/2015 04:29	WG808625
Styrene	ND		0.00555	5	08/13/2015 04:29	WG808625
1,1,1,2-Tetrachloroethane	ND		0.00555	5	08/13/2015 04:29	WG808625
1,1,2,2-Tetrachloroethane	ND		0.00555	5	08/13/2015 04:29	WG808625
1,1,2-Trichlorotrifluoroethane	ND		0.00555	5	08/13/2015 04:29	WG808625
Tetrachloroethene	ND		0.00555	5	08/13/2015 04:29	WG808625
Toluene	ND		0.0277	5	08/13/2015 04:29	WG808625
1,2,3-Trichlorobenzene	ND		0.00555	5	08/13/2015 04:29	WG808625
1,2,4-Trichlorobenzene	ND		0.00555	5	08/13/2015 04:29	WG808625
1,1,1-Trichloroethane	ND		0.00555	5	08/13/2015 04:29	WG808625
1,1,2-Trichloroethane	ND		0.00555	5	08/13/2015 04:29	WG808625
Trichloroethene	ND		0.00555	5	08/13/2015 04:29	WG808625
Trichlorofluoromethane	ND		0.0277	5	08/13/2015 04:29	WG808625
1,2,3-Trichloropropane	ND		0.0139	5	08/13/2015 04:29	WG808625
1,2,4-Trimethylbenzene	0.0189		0.00555	5	08/13/2015 04:29	WG808625
1,2,3-Trimethylbenzene	0.0106		0.00555	5	08/13/2015 04:29	WG808625
1,3,5-Trimethylbenzene	0.00680		0.00555	5	08/13/2015 04:29	WG808625
Vinyl chloride	ND		0.00555	5	08/13/2015 04:29	WG808625
Xylenes, Total	ND		0.0166	5	08/13/2015 04:29	WG808625
(S) Toluene-d8	*106*		*88.7-115*		*08/13/2015 04:29*	WG808625
(S) Dibromofluoromethane	*102*		*76.3-123*		*08/13/2015 04:29*	WG808625
(S) 4-Bromofluorobenzene	*94.4*		*69.7-129*		*08/13/2015 04:29*	WG808625

Semi Volatile Organic Compounds (GC/MS) by Method 8270C

Analyte	Result (dry) mg/kg	Qualifier	RDL (dry) mg/kg	Dilution	Analysis date / time	Batch
Acenaphthene	ND		0.0366	1	08/14/2015 07:20	WG808662
Acenaphthylene	ND		0.0366	1	08/14/2015 07:20	WG808662
Anthracene	ND		0.0366	1	08/14/2015 07:20	WG808662
Benzidine	ND		0.369	1	08/14/2015 07:20	WG808662
Benzo(a)anthracene	ND		0.0366	1	08/14/2015 07:20	WG808662
Benzo(b)fluoranthene	ND		0.0366	1	08/14/2015 07:20	WG808662
Benzo(k)fluoranthene	ND		0.0366	1	08/14/2015 07:20	WG808662
Benzo(g,h,i)perylene	ND		0.0366	1	08/14/2015 07:20	WG808662
Benzo(a)pyrene	ND		0.0366	1	08/14/2015 07:20	WG808662
Bis(2-chlorethoxy)methane	ND		0.369	1	08/14/2015 07:20	WG808662
Bis(2-chloroethyl)ether	ND		0.369	1	08/14/2015 07:20	WG808662
Bis(2-chloroisopropyl)ether	ND		0.369	1	08/14/2015 07:20	WG808662
4-Bromophenyl-phenylether	ND		0.369	1	08/14/2015 07:20	WG808662
2-Chloronaphthalene	ND		0.0366	1	08/14/2015 07:20	WG808662
4-Chlorophenyl-phenylether	ND		0.369	1	08/14/2015 07:20	WG808662

Semi Volatile Organic Compounds (GC/MS) by Method 8270C

Analyte	Result (dry) mg/kg	Qualifier	RDL (dry) mg/kg	Dilution	Analysis date / time	Batch
Chrysene	ND		0.0366	1	08/14/2015 07:20	WG808662
Dibenz(a,h)anthracene	ND		0.0366	1	08/14/2015 07:20	WG808662
3,3-Dichlorobenzidine	ND		0.369	1	08/14/2015 07:20	WG808662
2,4-Dinitrotoluene	ND		0.369	1	08/14/2015 07:20	WG808662
2,6-Dinitrotoluene	ND		0.369	1	08/14/2015 07:20	WG808662
Fluoranthene	ND		0.0366	1	08/14/2015 07:20	WG808662
Fluorene	ND		0.0366	1	08/14/2015 07:20	WG808662
Hexachlorobenzene	ND		0.369	1	08/14/2015 07:20	WG808662
Hexachloro-1,3-butadiene	ND		0.369	1	08/14/2015 07:20	WG808662
Hexachlorocyclopentadiene	ND		0.369	1	08/14/2015 07:20	WG808662
Hexachloroethane	ND		0.369	1	08/14/2015 07:20	WG808662
Indeno(1,2,3-cd)pyrene	ND		0.0366	1	08/14/2015 07:20	WG808662
Isophorone	ND		0.369	1	08/14/2015 07:20	WG808662
Naphthalene	0.211		0.0366	1	08/14/2015 07:20	WG808662
Nitrobenzene	ND		0.369	1	08/14/2015 07:20	WG808662
n-Nitrosodimethylamine	ND		0.369	1	08/14/2015 07:20	WG808662
n-Nitrosodiphenylamine	ND		0.369	1	08/14/2015 07:20	WG808662
n-Nitrosodi-n-propylamine	ND		0.369	1	08/14/2015 07:20	WG808662
Phenanthrene	ND		0.0366	1	08/14/2015 07:20	WG808662
Benzylbutyl phthalate	ND		0.369	1	08/14/2015 07:20	WG808662
Bis(2-ethylhexyl)phthalate	ND		0.369	1	08/14/2015 07:20	WG808662
Di-n-butyl phthalate	ND		0.369	1	08/14/2015 07:20	WG808662
Diethyl phthalate	ND		0.369	1	08/14/2015 07:20	WG808662
Dimethyl phthalate	ND		0.369	1	08/14/2015 07:20	WG808662
Di-n-octyl phthalate	ND		0.369	1	08/14/2015 07:20	WG808662
Pyrene	ND		0.0366	1	08/14/2015 07:20	WG808662
1,2,4-Trichlorobenzene	ND		0.369	1	08/14/2015 07:20	WG808662
4-Chloro-3-methylphenol	ND		0.369	1	08/14/2015 07:20	WG808662
2-Chlorophenol	ND		0.369	1	08/14/2015 07:20	WG808662
2,4-Dichlorophenol	ND		0.369	1	08/14/2015 07:20	WG808662
2,4-Dimethylphenol	ND		0.369	1	08/14/2015 07:20	WG808662
4,6-Dinitro-2-methylphenol	ND		0.369	1	08/14/2015 07:20	WG808662
2,4-Dinitrophenol	ND		0.369	1	08/14/2015 07:20	WG808662
2-Nitrophenol	ND		0.369	1	08/14/2015 07:20	WG808662
4-Nitrophenol	ND		0.369	1	08/14/2015 07:20	WG808662
Pentachlorophenol	ND		0.369	1	08/14/2015 07:20	WG808662
Phenol	ND		0.369	1	08/14/2015 07:20	WG808662
2,4,6-Trichlorophenol	ND		0.369	1	08/14/2015 07:20	WG808662
(S) 2-Fluorophenol	*85.2*		*21.1-116*		*08/14/2015 07:20*	WG808662
(S) Phenol-d5	*77.5*		*26.3-121*		*08/14/2015 07:20*	WG808662
(S) Nitrobenzene-d5	*77.1*		*21.9-129*		*08/14/2015 07:20*	WG808662
(S) 2-Fluorobiphenyl	*85.7*		*34.9-129*		*08/14/2015 07:20*	WG808662
(S) 2,4,6-Tribromophenol	*89.4*		*21.6-142*		*08/14/2015 07:20*	WG808662
(S) p-Terphenyl-d14	*72.8*		*21.5-128*		*08/14/2015 07:20*	WG808662

Total Solids by Method 2540 G-2011

Analyte	Result %	Qualifier	Dilution	Analysis date / time	Batch
Total Solids	89.9		1	08/13/2015 07:19	WG808614

Volatile Organic Compounds (GC/MS) by Method 8260B

Analyte	Result (dry) mg/kg	Qualifier	RDL (dry) mg/kg	Dilution	Analysis date / time	Batch
Acetone	ND		0.278	5	08/14/2015 01:10	WG809036
Acrylonitrile	ND		0.0556	5	08/14/2015 01:10	WG809036
Benzene	ND		0.00556	5	08/14/2015 01:10	WG809036
Bromobenzene	ND		0.00556	5	08/14/2015 01:10	WG809036
Bromodichloromethane	ND		0.00556	5	08/14/2015 01:10	WG809036
Bromoform	ND		0.00556	5	08/14/2015 01:10	WG809036
Bromomethane	ND		0.0278	5	08/14/2015 01:10	WG809036
n-Butylbenzene	ND		0.00556	5	08/14/2015 01:10	WG809036
sec-Butylbenzene	ND		0.00556	5	08/14/2015 01:10	WG809036
tert-Butylbenzene	ND		0.00556	5	08/14/2015 01:10	WG809036
Carbon tetrachloride	ND		0.00556	5	08/14/2015 01:10	WG809036
Chlorobenzene	ND		0.00556	5	08/14/2015 01:10	WG809036
Chlorodibromomethane	ND		0.00556	5	08/14/2015 01:10	WG809036
Chloroethane	ND		0.0278	5	08/14/2015 01:10	WG809036
2-Chloroethyl vinyl ether	ND		0.278	5	08/14/2015 01:10	WG809036
Chloroform	ND		0.0278	5	08/14/2015 01:10	WG809036
Chloromethane	ND		0.0139	5	08/14/2015 01:10	WG809036
2-Chlorotoluene	ND		0.00556	5	08/14/2015 01:10	WG809036
4-Chlorotoluene	ND		0.00556	5	08/14/2015 01:10	WG809036
1,2-Dibromo-3-Chloropropane	ND		0.0278	5	08/14/2015 01:10	WG809036
1,2-Dibromoethane	ND		0.00556	5	08/14/2015 01:10	WG809036
Dibromomethane	ND		0.00556	5	08/14/2015 01:10	WG809036
1,2-Dichlorobenzene	ND		0.00556	5	08/14/2015 01:10	WG809036
1,3-Dichlorobenzene	ND		0.00556	5	08/14/2015 01:10	WG809036
1,4-Dichlorobenzene	ND		0.00556	5	08/14/2015 01:10	WG809036
Dichlorodifluoromethane	ND		0.0278	5	08/14/2015 01:10	WG809036
1,1-Dichloroethane	ND		0.00556	5	08/14/2015 01:10	WG809036
1,2-Dichloroethane	ND		0.00556	5	08/14/2015 01:10	WG809036
1,1-Dichloroethene	ND		0.00556	5	08/14/2015 01:10	WG809036
cis-1,2-Dichloroethene	ND		0.00556	5	08/14/2015 01:10	WG809036
trans-1,2-Dichloroethene	ND		0.00556	5	08/14/2015 01:10	WG809036
1,2-Dichloropropane	ND		0.00556	5	08/14/2015 01:10	WG809036
1,1-Dichloropropene	ND		0.00556	5	08/14/2015 01:10	WG809036
1,3-Dichloropropane	ND		0.00556	5	08/14/2015 01:10	WG809036
cis-1,3-Dichloropropene	ND		0.00556	5	08/14/2015 01:10	WG809036
trans-1,3-Dichloropropene	ND		0.00556	5	08/14/2015 01:10	WG809036
2,2-Dichloropropane	ND		0.00556	5	08/14/2015 01:10	WG809036
Dicyclopentadiene	0.00838		0.00556	5	08/14/2015 01:10	WG809036
Di-isopropyl ether	ND		0.00556	5	08/14/2015 01:10	WG809036
Ethylbenzene	ND		0.00556	5	08/14/2015 01:10	WG809036
Hexachloro-1,3-butadiene	ND		0.00556	5	08/14/2015 01:10	WG809036
Isopropylbenzene	ND		0.00556	5	08/14/2015 01:10	WG809036
p-Isopropyltoluene	ND		0.00556	5	08/14/2015 01:10	WG809036
2-Butanone (MEK)	ND		0.0556	5	08/14/2015 01:10	WG809036
Methylene Chloride	ND		0.0278	5	08/14/2015 01:10	WG809036
4-Methyl-2-pentanone (MIBK)	ND		0.0556	5	08/14/2015 01:10	WG809036
Methyl tert-butyl ether	ND		0.00556	5	08/14/2015 01:10	WG809036
Naphthalene	0.0773		0.0278	5	08/14/2015 01:10	WG809036
n-Propylbenzene	ND		0.00556	5	08/14/2015 01:10	WG809036
Styrene	ND		0.00556	5	08/14/2015 01:10	WG809036

Volatile Organic Compounds (GC/MS) by Method 8260B

Analyte	Result (dry) mg/kg	Qualifier	RDL (dry) mg/kg	Dilution	Analysis date / time	Batch
1,1,1,2-Tetrachloroethane	ND		0.00556	5	08/14/2015 01:10	WG809036
1,1,2,2-Tetrachloroethane	ND		0.00556	5	08/14/2015 01:10	WG809036
1,1,2-Trichlorotrifluoroethane	ND		0.00556	5	08/14/2015 01:10	WG809036
Tetrachloroethene	ND		0.00556	5	08/14/2015 01:10	WG809036
Toluene	ND		0.0278	5	08/14/2015 01:10	WG809036
1,2,3-Trichlorobenzene	ND		0.00556	5	08/14/2015 01:10	WG809036
1,2,4-Trichlorobenzene	ND		0.00556	5	08/14/2015 01:10	WG809036
1,1,1-Trichloroethane	ND		0.00556	5	08/14/2015 01:10	WG809036
1,1,2-Trichloroethane	ND		0.00556	5	08/14/2015 01:10	WG809036
Trichloroethene	ND		0.00556	5	08/14/2015 01:10	WG809036
Trichlorofluoromethane	ND		0.0278	5	08/14/2015 01:10	WG809036
1,2,3-Trichloropropane	ND		0.0139	5	08/14/2015 01:10	WG809036
1,2,4-Trimethylbenzene	0.0198		0.00556	5	08/14/2015 01:10	WG809036
1,2,3-Trimethylbenzene	0.0114		0.00556	5	08/14/2015 01:10	WG809036
1,3,5-Trimethylbenzene	ND		0.00556	5	08/14/2015 01:10	WG809036
Vinyl chloride	ND		0.00556	5	08/14/2015 01:10	WG809036
Xylenes, Total	ND		0.0167	5	08/14/2015 01:10	WG809036
(S) Toluene-d8	*103*		*88.7-115*		*08/14/2015 01:10*	WG809036
(S) Dibromofluoromethane	*93.9*		*76.3-123*		*08/14/2015 01:10*	WG809036
(S) 4-Bromofluorobenzene	*103*		*69.7-129*		*08/14/2015 01:10*	WG809036

Semi Volatile Organic Compounds (GC/MS) by Method 8270C

Analyte	Result (dry) mg/kg	Qualifier	RDL (dry) mg/kg	Dilution	Analysis date / time	Batch
Acenaphthene	ND		0.0367	1	08/13/2015 15:07	WG808662
Acenaphthylene	ND		0.0367	1	08/13/2015 15:07	WG808662
Anthracene	ND		0.0367	1	08/13/2015 15:07	WG808662
Benzidine	ND		0.370	1	08/13/2015 15:07	WG808662
Benzo(a)anthracene	ND		0.0367	1	08/13/2015 15:07	WG808662
Benzo(b)fluoranthene	ND		0.0367	1	08/13/2015 15:07	WG808662
Benzo(k)fluoranthene	ND		0.0367	1	08/13/2015 15:07	WG808662
Benzo(g,h,i)perylene	ND		0.0367	1	08/13/2015 15:07	WG808662
Benzo(a)pyrene	ND		0.0367	1	08/13/2015 15:07	WG808662
Bis(2-chlorethoxy)methane	ND		0.370	1	08/13/2015 15:07	WG808662
Bis(2-chloroethyl)ether	ND		0.370	1	08/13/2015 15:07	WG808662
Bis(2-chloroisopropyl)ether	ND		0.370	1	08/13/2015 15:07	WG808662
4-Bromophenyl-phenylether	ND		0.370	1	08/13/2015 15:07	WG808662
2-Chloronaphthalene	ND		0.0367	1	08/13/2015 15:07	WG808662
4-Chlorophenyl-phenylether	ND		0.370	1	08/13/2015 15:07	WG808662
Chrysene	ND		0.0367	1	08/13/2015 15:07	WG808662
Dibenz(a,h)anthracene	ND		0.0367	1	08/13/2015 15:07	WG808662
3,3-Dichlorobenzidine	ND		0.370	1	08/13/2015 15:07	WG808662
2,4-Dinitrotoluene	ND		0.370	1	08/13/2015 15:07	WG808662
2,6-Dinitrotoluene	ND		0.370	1	08/13/2015 15:07	WG808662
Fluoranthene	ND		0.0367	1	08/13/2015 15:07	WG808662
Fluorene	ND		0.0367	1	08/13/2015 15:07	WG808662
Hexachlorobenzene	ND		0.370	1	08/13/2015 15:07	WG808662
Hexachloro-1,3-butadiene	ND		0.370	1	08/13/2015 15:07	WG808662
Hexachlorocyclopentadiene	ND		0.370	1	08/13/2015 15:07	WG808662
Hexachloroethane	ND		0.370	1	08/13/2015 15:07	WG808662
Indeno(1,2,3-cd)pyrene	ND		0.0367	1	08/13/2015 15:07	WG808662
Isophorone	ND		0.370	1	08/13/2015 15:07	WG808662
Naphthalene	0.228		0.0367	1	08/13/2015 15:07	WG808662
Nitrobenzene	ND		0.370	1	08/13/2015 15:07	WG808662
n-Nitrosodimethylamine	ND		0.370	1	08/13/2015 15:07	WG808662
n-Nitrosodiphenylamine	ND		0.370	1	08/13/2015 15:07	WG808662

Semi Volatile Organic Compounds (GC/MS) by Method 8270C

Analyte	Result (dry) mg/kg	Qualifier	RDL (dry) mg/kg	Dilution	Analysis date / time	Batch
n-Nitrosodi-n-propylamine	ND		0.370	1	08/13/2015 15:07	WG808662
Phenanthrene	ND		0.0367	1	08/13/2015 15:07	WG808662
Benzylbutyl phthalate	ND		0.370	1	08/13/2015 15:07	WG808662
Bis(2-ethylhexyl)phthalate	ND		0.370	1	08/13/2015 15:07	WG808662
Di-n-butyl phthalate	ND		0.370	1	08/13/2015 15:07	WG808662
Diethyl phthalate	ND		0.370	1	08/13/2015 15:07	WG808662
Dimethyl phthalate	ND		0.370	1	08/13/2015 15:07	WG808662
Di-n-octyl phthalate	ND		0.370	1	08/13/2015 15:07	WG808662
Pyrene	ND		0.0367	1	08/13/2015 15:07	WG808662
1,2,4-Trichlorobenzene	ND		0.370	1	08/13/2015 15:07	WG808662
4-Chloro-3-methylphenol	ND		0.370	1	08/13/2015 15:07	WG808662
2-Chlorophenol	ND		0.370	1	08/13/2015 15:07	WG808662
2,4-Dichlorophenol	ND		0.370	1	08/13/2015 15:07	WG808662
2,4-Dimethylphenol	ND		0.370	1	08/13/2015 15:07	WG808662
4,6-Dinitro-2-methylphenol	ND		0.370	1	08/13/2015 15:07	WG808662
2,4-Dinitrophenol	ND		0.370	1	08/13/2015 15:07	WG808662
2-Nitrophenol	ND		0.370	1	08/13/2015 15:07	WG808662
4-Nitrophenol	ND		0.370	1	08/13/2015 15:07	WG808662
Pentachlorophenol	ND		0.370	1	08/13/2015 15:07	WG808662
Phenol	ND		0.370	1	08/13/2015 15:07	WG808662
2,4,6-Trichlorophenol	ND		0.370	1	08/13/2015 15:07	WG808662
(S) 2-Fluorophenol	*79.8*		*21.1-116*		*08/13/2015 15:07*	WG808662
(S) Phenol-d5	*79.7*		*26.3-121*		*08/13/2015 15:07*	WG808662
(S) Nitrobenzene-d5	*82.0*		*21.9-129*		*08/13/2015 15:07*	WG808662
(S) 2-Fluorobiphenyl	*80.5*		*34.9-129*		*08/13/2015 15:07*	WG808662
(S) 2,4,6-Tribromophenol	*96.9*		*21.6-142*		*08/13/2015 15:07*	WG808662
(S) p-Terphenyl-d14	*64.5*		*21.5-128*		*08/13/2015 15:07*	WG808662

1 Cp
2 Tc
3 Ss
4 Cn
5 Sr
6 Qc
7 Gl
8 Al
9 Sc

Total Solids by Method 2540 G-2011

Analyte	Result %	Qualifier	Dilution	Analysis date / time	Batch
Total Solids	90.9		1	08/13/2015 07:19	WG808614

Mercury by Method 7471A

Analyte	Result (dry) mg/kg	Qualifier	RDL (dry) mg/kg	Dilution	Analysis date / time	Batch
Mercury	ND		0.0220	1	08/13/2015 12:57	WG808666

Metals (ICP) by Method 6010B

Analyte	Result (dry) mg/kg	Qualifier	RDL (dry) mg/kg	Dilution	Analysis date / time	Batch
Arsenic	ND		2.20	1	08/13/2015 04:53	WG808635
Barium	6.80		0.550	1	08/13/2015 04:53	WG808635
Cadmium	ND		0.550	1	08/13/2015 04:53	WG808635
Chromium	4.36		1.10	1	08/13/2015 04:53	WG808635
Lead	2.78		0.550	1	08/13/2015 04:53	WG808635
Selenium	ND		2.20	1	08/13/2015 04:53	WG808635
Silver	ND		1.10	1	08/13/2015 04:53	WG808635

Volatile Organic Compounds (GC/MS) by Method 8260B

Analyte	Result (dry) mg/kg	Qualifier	RDL (dry) mg/kg	Dilution	Analysis date / time	Batch
Acetone	ND		0.275	5	08/14/2015 01:30	WG809036
Acrylonitrile	ND		0.0550	5	08/14/2015 01:30	WG809036
Benzene	ND		0.00550	5	08/14/2015 01:30	WG809036
Bromobenzene	ND		0.00550	5	08/14/2015 01:30	WG809036
Bromodichloromethane	ND		0.00550	5	08/14/2015 01:30	WG809036
Bromoform	ND		0.00550	5	08/14/2015 01:30	WG809036
Bromomethane	ND		0.0275	5	08/14/2015 01:30	WG809036
n-Butylbenzene	ND		0.00550	5	08/14/2015 01:30	WG809036
sec-Butylbenzene	ND		0.00550	5	08/14/2015 01:30	WG809036
tert-Butylbenzene	ND		0.00550	5	08/14/2015 01:30	WG809036
Carbon tetrachloride	ND		0.00550	5	08/14/2015 01:30	WG809036
Chlorobenzene	ND		0.00550	5	08/14/2015 01:30	WG809036
Chlorodibromomethane	ND		0.00550	5	08/14/2015 01:30	WG809036
Chloroethane	ND		0.0275	5	08/14/2015 01:30	WG809036
2-Chloroethyl vinyl ether	ND		0.275	5	08/14/2015 01:30	WG809036
Chloroform	ND		0.0275	5	08/14/2015 01:30	WG809036
Chloromethane	ND		0.0138	5	08/14/2015 01:30	WG809036
2-Chlorotoluene	ND		0.00550	5	08/14/2015 01:30	WG809036
4-Chlorotoluene	ND		0.00550	5	08/14/2015 01:30	WG809036
1,2-Dibromo-3-Chloropropane	ND		0.0275	5	08/14/2015 01:30	WG809036
1,2-Dibromoethane	ND		0.00550	5	08/14/2015 01:30	WG809036
Dibromomethane	ND		0.00550	5	08/14/2015 01:30	WG809036
1,2-Dichlorobenzene	ND		0.00550	5	08/14/2015 01:30	WG809036
1,3-Dichlorobenzene	ND		0.00550	5	08/14/2015 01:30	WG809036
1,4-Dichlorobenzene	ND		0.00550	5	08/14/2015 01:30	WG809036
Dichlorodifluoromethane	ND		0.0275	5	08/14/2015 01:30	WG809036
1,1-Dichloroethane	ND		0.00550	5	08/14/2015 01:30	WG809036
1,2-Dichloroethane	ND		0.00550	5	08/14/2015 01:30	WG809036
1,1-Dichloroethene	ND		0.00550	5	08/14/2015 01:30	WG809036
cis-1,2-Dichloroethene	ND		0.00550	5	08/14/2015 01:30	WG809036
trans-1,2-Dichloroethene	ND		0.00550	5	08/14/2015 01:30	WG809036
1,2-Dichloropropane	ND		0.00550	5	08/14/2015 01:30	WG809036
1,1-Dichloropropene	ND		0.00550	5	08/14/2015 01:30	WG809036

Volatile Organic Compounds (GC/MS) by Method 8260B

Analyte	Result (dry) mg/kg	Qualifier	RDL (dry) mg/kg	Dilution	Analysis date / time	Batch
1,3-Dichloropropane	ND		0.00550	5	08/14/2015 01:30	WG809036
cis-1,3-Dichloropropene	ND		0.00550	5	08/14/2015 01:30	WG809036
trans-1,3-Dichloropropene	ND		0.00550	5	08/14/2015 01:30	WG809036
2,2-Dichloropropane	ND		0.00550	5	08/14/2015 01:30	WG809036
Dicyclopentadiene	ND		0.00550	5	08/14/2015 01:30	WG809036
Di-isopropyl ether	ND		0.00550	5	08/14/2015 01:30	WG809036
Ethylbenzene	ND		0.00550	5	08/14/2015 01:30	WG809036
Hexachloro-1,3-butadiene	ND		0.00550	5	08/14/2015 01:30	WG809036
Isopropylbenzene	ND		0.00550	5	08/14/2015 01:30	WG809036
p-Isopropyltoluene	ND		0.00550	5	08/14/2015 01:30	WG809036
2-Butanone (MEK)	ND		0.0550	5	08/14/2015 01:30	WG809036
Methylene Chloride	ND		0.0275	5	08/14/2015 01:30	WG809036
4-Methyl-2-pentanone (MIBK)	ND		0.0550	5	08/14/2015 01:30	WG809036
Methyl tert-butyl ether	ND		0.00550	5	08/14/2015 01:30	WG809036
Naphthalene	ND		0.0275	5	08/14/2015 01:30	WG809036
n-Propylbenzene	ND		0.00550	5	08/14/2015 01:30	WG809036
Styrene	ND		0.00550	5	08/14/2015 01:30	WG809036
1,1,1,2-Tetrachloroethane	ND		0.00550	5	08/14/2015 01:30	WG809036
1,1,2,2-Tetrachloroethane	ND		0.00550	5	08/14/2015 01:30	WG809036
1,1,2-Trichlorotrifluoroethane	ND		0.00550	5	08/14/2015 01:30	WG809036
Tetrachloroethene	ND		0.00550	5	08/14/2015 01:30	WG809036
Toluene	ND		0.0275	5	08/14/2015 01:30	WG809036
1,2,3-Trichlorobenzene	ND		0.00550	5	08/14/2015 01:30	WG809036
1,2,4-Trichlorobenzene	ND		0.00550	5	08/14/2015 01:30	WG809036
1,1,1-Trichloroethane	ND		0.00550	5	08/14/2015 01:30	WG809036
1,1,2-Trichloroethane	ND		0.00550	5	08/14/2015 01:30	WG809036
Trichloroethene	ND		0.00550	5	08/14/2015 01:30	WG809036
Trichlorofluoromethane	ND		0.0275	5	08/14/2015 01:30	WG809036
1,2,3-Trichloropropane	ND		0.0138	5	08/14/2015 01:30	WG809036
1,2,4-Trimethylbenzene	ND		0.00550	5	08/14/2015 01:30	WG809036
1,2,3-Trimethylbenzene	ND		0.00550	5	08/14/2015 01:30	WG809036
1,3,5-Trimethylbenzene	ND		0.00550	5	08/14/2015 01:30	WG809036
Vinyl chloride	ND		0.00550	5	08/14/2015 01:30	WG809036
Xylenes, Total	ND		0.0165	5	08/14/2015 01:30	WG809036
(S) Toluene-d8	*102*		*88.7-115*		*08/14/2015 01:30*	WG809036
(S) Dibromofluoromethane	*95.8*		*76.3-123*		*08/14/2015 01:30*	WG809036
(S) 4-Bromofluorobenzene	*101*		*69.7-129*		*08/14/2015 01:30*	WG809036

Semi Volatile Organic Compounds (GC/MS) by Method 8270C

Analyte	Result (dry) mg/kg	Qualifier	RDL (dry) mg/kg	Dilution	Analysis date / time	Batch
Acenaphthene	ND		0.0363	1	08/13/2015 13:10	WG808662
Acenaphthylene	ND		0.0363	1	08/13/2015 13:10	WG808662
Anthracene	ND		0.0363	1	08/13/2015 13:10	WG808662
Benzidine	ND		0.366	1	08/13/2015 13:10	WG808662
Benzo(a)anthracene	ND		0.0363	1	08/13/2015 13:10	WG808662
Benzo(b)fluoranthene	ND		0.0363	1	08/13/2015 13:10	WG808662
Benzo(k)fluoranthene	ND		0.0363	1	08/13/2015 13:10	WG808662
Benzo(g,h,i)perylene	ND		0.0363	1	08/13/2015 13:10	WG808662
Benzo(a)pyrene	ND		0.0363	1	08/13/2015 13:10	WG808662
Bis(2-chlorethoxy)methane	ND		0.366	1	08/13/2015 13:10	WG808662
Bis(2-chloroethyl)ether	ND		0.366	1	08/13/2015 13:10	WG808662
Bis(2-chloroisopropyl)ether	ND		0.366	1	08/13/2015 13:10	WG808662
4-Bromophenyl-phenylether	ND		0.366	1	08/13/2015 13:10	WG808662
2-Chloronaphthalene	ND		0.0363	1	08/13/2015 13:10	WG808662
4-Chlorophenyl-phenylether	ND		0.366	1	08/13/2015 13:10	WG808662

Semi Volatile Organic Compounds (GC/MS) by Method 8270C

Analyte	Result (dry) mg/kg	Qualifier	RDL (dry) mg/kg	Dilution	Analysis date / time	Batch
Chrysene	ND		0.0363	1	08/13/2015 13:10	WG808662
Dibenz(a,h)anthracene	ND		0.0363	1	08/13/2015 13:10	WG808662
3,3-Dichlorobenzidine	ND		0.366	1	08/13/2015 13:10	WG808662
2,4-Dinitrotoluene	ND		0.366	1	08/13/2015 13:10	WG808662
2,6-Dinitrotoluene	ND		0.366	1	08/13/2015 13:10	WG808662
Fluoranthene	ND		0.0363	1	08/13/2015 13:10	WG808662
Fluorene	ND		0.0363	1	08/13/2015 13:10	WG808662
Hexachlorobenzene	ND		0.366	1	08/13/2015 13:10	WG808662
Hexachloro-1,3-butadiene	ND		0.366	1	08/13/2015 13:10	WG808662
Hexachlorocyclopentadiene	ND		0.366	1	08/13/2015 13:10	WG808662
Hexachloroethane	ND		0.366	1	08/13/2015 13:10	WG808662
Indeno(1,2,3-cd)pyrene	ND		0.0363	1	08/13/2015 13:10	WG808662
Isophorone	ND		0.366	1	08/13/2015 13:10	WG808662
Naphthalene	ND		0.0363	1	08/13/2015 13:10	WG808662
Nitrobenzene	ND		0.366	1	08/13/2015 13:10	WG808662
n-Nitrosodimethylamine	ND		0.366	1	08/13/2015 13:10	WG808662
n-Nitrosodiphenylamine	ND		0.366	1	08/13/2015 13:10	WG808662
n-Nitrosodi-n-propylamine	ND		0.366	1	08/13/2015 13:10	WG808662
Phenanthrene	ND		0.0363	1	08/13/2015 13:10	WG808662
Benzylbutyl phthalate	ND		0.366	1	08/13/2015 13:10	WG808662
Bis(2-ethylhexyl)phthalate	ND		0.366	1	08/13/2015 13:10	WG808662
Di-n-butyl phthalate	ND		0.366	1	08/13/2015 13:10	WG808662
Diethyl phthalate	ND		0.366	1	08/13/2015 13:10	WG808662
Dimethyl phthalate	ND		0.366	1	08/13/2015 13:10	WG808662
Di-n-octyl phthalate	ND		0.366	1	08/13/2015 13:10	WG808662
Pyrene	ND		0.0363	1	08/13/2015 13:10	WG808662
1,2,4-Trichlorobenzene	ND		0.366	1	08/13/2015 13:10	WG808662
4-Chloro-3-methylphenol	ND		0.366	1	08/13/2015 13:10	WG808662
2-Chlorophenol	ND		0.366	1	08/13/2015 13:10	WG808662
2,4-Dichlorophenol	ND		0.366	1	08/13/2015 13:10	WG808662
2,4-Dimethylphenol	ND		0.366	1	08/13/2015 13:10	WG808662
4,6-Dinitro-2-methylphenol	ND		0.366	1	08/13/2015 13:10	WG808662
2,4-Dinitrophenol	ND		0.366	1	08/13/2015 13:10	WG808662
2-Nitrophenol	ND		0.366	1	08/13/2015 13:10	WG808662
4-Nitrophenol	ND		0.366	1	08/13/2015 13:10	WG808662
Pentachlorophenol	ND		0.366	1	08/13/2015 13:10	WG808662
Phenol	ND		0.366	1	08/13/2015 13:10	WG808662
2,4,6-Trichlorophenol	ND		0.366	1	08/13/2015 13:10	WG808662
(S) 2-Fluorophenol	*82.3*		*21.1-116*		*08/13/2015 13:10*	WG808662
(S) Phenol-d5	*83.3*		*26.3-121*		*08/13/2015 13:10*	WG808662
(S) Nitrobenzene-d5	*81.1*		*21.9-129*		*08/13/2015 13:10*	WG808662
(S) 2-Fluorobiphenyl	*83.6*		*34.9-129*		*08/13/2015 13:10*	WG808662
(S) 2,4,6-Tribromophenol	*93.4*		*21.6-142*		*08/13/2015 13:10*	WG808662
(S) p-Terphenyl-d14	*78.2*		*21.5-128*		*08/13/2015 13:10*	WG808662

Total Solids by Method 2540 G-2011

Analyte	Result %	Qualifier	Dilution	Analysis date / time	Batch
Total Solids	88.6		1	08/13/2015 07:11	WG808615

Volatile Organic Compounds (GC/MS) by Method 8260B

Analyte	Result (dry) mg/kg	Qualifier	RDL (dry) mg/kg	Dilution	Analysis date / time	Batch
Acetone	ND		0.282	5	08/14/2015 01:49	WG809036
Acrylonitrile	ND		0.0564	5	08/14/2015 01:49	WG809036
Benzene	ND		0.00564	5	08/14/2015 01:49	WG809036
Bromobenzene	ND		0.00564	5	08/14/2015 01:49	WG809036
Bromodichloromethane	ND		0.00564	5	08/14/2015 01:49	WG809036
Bromoform	ND		0.00564	5	08/14/2015 01:49	WG809036
Bromomethane	ND		0.0282	5	08/14/2015 01:49	WG809036
n-Butylbenzene	ND		0.00564	5	08/14/2015 01:49	WG809036
sec-Butylbenzene	ND		0.00564	5	08/14/2015 01:49	WG809036
tert-Butylbenzene	ND		0.00564	5	08/14/2015 01:49	WG809036
Carbon tetrachloride	ND		0.00564	5	08/14/2015 01:49	WG809036
Chlorobenzene	ND		0.00564	5	08/14/2015 01:49	WG809036
Chlorodibromomethane	ND		0.00564	5	08/14/2015 01:49	WG809036
Chloroethane	ND		0.0282	5	08/14/2015 01:49	WG809036
2-Chloroethyl vinyl ether	ND		0.282	5	08/14/2015 01:49	WG809036
Chloroform	ND		0.0282	5	08/14/2015 01:49	WG809036
Chloromethane	ND		0.0141	5	08/14/2015 01:49	WG809036
2-Chlorotoluene	ND		0.00564	5	08/14/2015 01:49	WG809036
4-Chlorotoluene	ND		0.00564	5	08/14/2015 01:49	WG809036
1,2-Dibromo-3-Chloropropane	ND		0.0282	5	08/14/2015 01:49	WG809036
1,2-Dibromoethane	ND		0.00564	5	08/14/2015 01:49	WG809036
Dibromomethane	ND		0.00564	5	08/14/2015 01:49	WG809036
1,2-Dichlorobenzene	ND		0.00564	5	08/14/2015 01:49	WG809036
1,3-Dichlorobenzene	ND		0.00564	5	08/14/2015 01:49	WG809036
1,4-Dichlorobenzene	ND		0.00564	5	08/14/2015 01:49	WG809036
Dichlorodifluoromethane	ND		0.0282	5	08/14/2015 01:49	WG809036
1,1-Dichloroethane	ND		0.00564	5	08/14/2015 01:49	WG809036
1,2-Dichloroethane	ND		0.00564	5	08/14/2015 01:49	WG809036
1,1-Dichloroethene	ND		0.00564	5	08/14/2015 01:49	WG809036
cis-1,2-Dichloroethene	ND		0.00564	5	08/14/2015 01:49	WG809036
trans-1,2-Dichloroethene	ND		0.00564	5	08/14/2015 01:49	WG809036
1,2-Dichloropropane	ND		0.00564	5	08/14/2015 01:49	WG809036
1,1-Dichloropropene	ND		0.00564	5	08/14/2015 01:49	WG809036
1,3-Dichloropropane	ND		0.00564	5	08/14/2015 01:49	WG809036
cis-1,3-Dichloropropene	ND		0.00564	5	08/14/2015 01:49	WG809036
trans-1,3-Dichloropropene	ND		0.00564	5	08/14/2015 01:49	WG809036
2,2-Dichloropropane	ND		0.00564	5	08/14/2015 01:49	WG809036
Dicyclopentadiene	0.0222		0.00564	5	08/14/2015 01:49	WG809036
Di-isopropyl ether	ND		0.00564	5	08/14/2015 01:49	WG809036
Ethylbenzene	ND		0.00564	5	08/14/2015 01:49	WG809036
Hexachloro-1,3-butadiene	ND		0.00564	5	08/14/2015 01:49	WG809036
Isopropylbenzene	ND		0.00564	5	08/14/2015 01:49	WG809036
p-Isopropyltoluene	ND		0.00564	5	08/14/2015 01:49	WG809036
2-Butanone (MEK)	ND		0.0564	5	08/14/2015 01:49	WG809036
Methylene Chloride	ND		0.0282	5	08/14/2015 01:49	WG809036
4-Methyl-2-pentanone (MIBK)	ND		0.0564	5	08/14/2015 01:49	WG809036
Methyl tert-butyl ether	ND		0.00564	5	08/14/2015 01:49	WG809036
Naphthalene	0.216		0.0282	5	08/14/2015 01:49	WG809036
n-Propylbenzene	0.00578		0.00564	5	08/14/2015 01:49	WG809036
Styrene	ND		0.00564	5	08/14/2015 01:49	WG809036

Volatile Organic Compounds (GC/MS) by Method 8260B

Analyte	Result (dry) mg/kg	Qualifier	RDL (dry) mg/kg	Dilution	Analysis date / time	Batch
1,1,1,2-Tetrachloroethane	ND		0.00564	5	08/14/2015 01:49	WG809036
1,1,2,2-Tetrachloroethane	ND		0.00564	5	08/14/2015 01:49	WG809036
1,1,2-Trichlorotrifluoroethane	ND		0.00564	5	08/14/2015 01:49	WG809036
Tetrachloroethene	ND		0.00564	5	08/14/2015 01:49	WG809036
Toluene	ND		0.0282	5	08/14/2015 01:49	WG809036
1,2,3-Trichlorobenzene	ND		0.00564	5	08/14/2015 01:49	WG809036
1,2,4-Trichlorobenzene	ND		0.00564	5	08/14/2015 01:49	WG809036
1,1,1-Trichloroethane	ND		0.00564	5	08/14/2015 01:49	WG809036
1,1,2-Trichloroethane	ND		0.00564	5	08/14/2015 01:49	WG809036
Trichloroethene	ND		0.00564	5	08/14/2015 01:49	WG809036
Trichlorofluoromethane	ND		0.0282	5	08/14/2015 01:49	WG809036
1,2,3-Trichloropropane	ND		0.0141	5	08/14/2015 01:49	WG809036
1,2,4-Trimethylbenzene	0.0735		0.00564	5	08/14/2015 01:49	WG809036
1,2,3-Trimethylbenzene	0.0412		0.00564	5	08/14/2015 01:49	WG809036
1,3,5-Trimethylbenzene	0.0187		0.00564	5	08/14/2015 01:49	WG809036
Vinyl chloride	ND		0.00564	5	08/14/2015 01:49	WG809036
Xylenes, Total	0.0312		0.0169	5	08/14/2015 01:49	WG809036
(S) Toluene-d8	*101*		*88.7-115*		*08/14/2015 01:49*	WG809036
(S) Dibromofluoromethane	*94.3*		*76.3-123*		*08/14/2015 01:49*	WG809036
(S) 4-Bromofluorobenzene	*101*		*69.7-129*		*08/14/2015 01:49*	WG809036

Semi Volatile Organic Compounds (GC/MS) by Method 8270C

Analyte	Result (dry) mg/kg	Qualifier	RDL (dry) mg/kg	Dilution	Analysis date / time	Batch
Acenaphthene	ND		0.0372	1	08/13/2015 13:33	WG808662
Acenaphthylene	ND		0.0372	1	08/13/2015 13:33	WG808662
Anthracene	ND		0.0372	1	08/13/2015 13:33	WG808662
Benzidine	ND		0.376	1	08/13/2015 13:33	WG808662
Benzo(a)anthracene	ND		0.0372	1	08/13/2015 13:33	WG808662
Benzo(b)fluoranthene	ND		0.0372	1	08/13/2015 13:33	WG808662
Benzo(k)fluoranthene	ND		0.0372	1	08/13/2015 13:33	WG808662
Benzo(g,h,i)perylene	ND		0.0372	1	08/13/2015 13:33	WG808662
Benzo(a)pyrene	ND		0.0372	1	08/13/2015 13:33	WG808662
Bis(2-chlorethoxy)methane	ND		0.376	1	08/13/2015 13:33	WG808662
Bis(2-chloroethyl)ether	ND		0.376	1	08/13/2015 13:33	WG808662
Bis(2-chloroisopropyl)ether	ND		0.376	1	08/13/2015 13:33	WG808662
4-Bromophenyl-phenylether	ND		0.376	1	08/13/2015 13:33	WG808662
2-Chloronaphthalene	ND		0.0372	1	08/13/2015 13:33	WG808662
4-Chlorophenyl-phenylether	ND		0.376	1	08/13/2015 13:33	WG808662
Chrysene	ND		0.0372	1	08/13/2015 13:33	WG808662
Dibenz(a,h)anthracene	ND		0.0372	1	08/13/2015 13:33	WG808662
3,3-Dichlorobenzidine	ND		0.376	1	08/13/2015 13:33	WG808662
2,4-Dinitrotoluene	ND		0.376	1	08/13/2015 13:33	WG808662
2,6-Dinitrotoluene	ND		0.376	1	08/13/2015 13:33	WG808662
Fluoranthene	ND		0.0372	1	08/13/2015 13:33	WG808662
Fluorene	ND		0.0372	1	08/13/2015 13:33	WG808662
Hexachlorobenzene	ND		0.376	1	08/13/2015 13:33	WG808662
Hexachloro-1,3-butadiene	ND		0.376	1	08/13/2015 13:33	WG808662
Hexachlorocyclopentadiene	ND		0.376	1	08/13/2015 13:33	WG808662
Hexachloroethane	ND		0.376	1	08/13/2015 13:33	WG808662
Indeno(1,2,3-cd)pyrene	ND		0.0372	1	08/13/2015 13:33	WG808662
Isophorone	ND		0.376	1	08/13/2015 13:33	WG808662
Naphthalene	0.543		0.0372	1	08/13/2015 13:33	WG808662
Nitrobenzene	ND		0.376	1	08/13/2015 13:33	WG808662
n-Nitrosodimethylamine	ND		0.376	1	08/13/2015 13:33	WG808662
n-Nitrosodiphenylamine	ND		0.376	1	08/13/2015 13:33	WG808662

Semi Volatile Organic Compounds (GC/MS) by Method 8270C

Analyte	Result (dry) mg/kg	Qualifier	RDL (dry) mg/kg	Dilution	Analysis date / time	Batch
n-Nitrosodi-n-propylamine	ND		0.376	1	08/13/2015 13:33	WG808662
Phenanthrene	ND		0.0372	1	08/13/2015 13:33	WG808662
Benzylbutyl phthalate	ND		0.376	1	08/13/2015 13:33	WG808662
Bis(2-ethylhexyl)phthalate	ND		0.376	1	08/13/2015 13:33	WG808662
Di-n-butyl phthalate	ND		0.376	1	08/13/2015 13:33	WG808662
Diethyl phthalate	ND		0.376	1	08/13/2015 13:33	WG808662
Dimethyl phthalate	ND		0.376	1	08/13/2015 13:33	WG808662
Di-n-octyl phthalate	ND		0.376	1	08/13/2015 13:33	WG808662
Pyrene	ND		0.0372	1	08/13/2015 13:33	WG808662
1,2,4-Trichlorobenzene	ND		0.376	1	08/13/2015 13:33	WG808662
4-Chloro-3-methylphenol	ND		0.376	1	08/13/2015 13:33	WG808662
2-Chlorophenol	ND		0.376	1	08/13/2015 13:33	WG808662
2,4-Dichlorophenol	ND		0.376	1	08/13/2015 13:33	WG808662
2,4-Dimethylphenol	ND		0.376	1	08/13/2015 13:33	WG808662
4,6-Dinitro-2-methylphenol	ND		0.376	1	08/13/2015 13:33	WG808662
2,4-Dinitrophenol	ND		0.376	1	08/13/2015 13:33	WG808662
2-Nitrophenol	ND		0.376	1	08/13/2015 13:33	WG808662
4-Nitrophenol	ND		0.376	1	08/13/2015 13:33	WG808662
Pentachlorophenol	ND		0.376	1	08/13/2015 13:33	WG808662
Phenol	ND		0.376	1	08/13/2015 13:33	WG808662
2,4,6-Trichlorophenol	ND		0.376	1	08/13/2015 13:33	WG808662
(S) 2-Fluorophenol	*81.9*		*21.1-116*		*08/13/2015 13:33*	WG808662
(S) Phenol-d5	*81.1*		*26.3-121*		*08/13/2015 13:33*	WG808662
(S) Nitrobenzene-d5	*80.7*		*21.9-129*		*08/13/2015 13:33*	WG808662
(S) 2-Fluorobiphenyl	*79.7*		*34.9-129*		*08/13/2015 13:33*	WG808662
(S) 2,4,6-Tribromophenol	*101*		*21.6-142*		*08/13/2015 13:33*	WG808662
(S) p-Terphenyl-d14	*73.9*		*21.5-128*		*08/13/2015 13:33*	WG808662

Total Solids by Method 2540 G-2011

Analyte	Result %	Qualifier	Dilution	Analysis date / time	Batch
Total Solids	91.1		1	08/13/2015 07:11	WG808615

Mercury by Method 7471A

Analyte	Result (dry) mg/kg	Qualifier	RDL (dry) mg/kg	Dilution	Analysis date / time	Batch
Mercury	ND		0.0220	1	08/13/2015 13:00	WG808666

Metals (ICP) by Method 6010B

Analyte	Result (dry) mg/kg	Qualifier	RDL (dry) mg/kg	Dilution	Analysis date / time	Batch
Arsenic	ND		2.20	1	08/13/2015 04:56	WG808635
Barium	9.36		0.549	1	08/13/2015 04:56	WG808635
Cadmium	ND		0.549	1	08/13/2015 04:56	WG808635
Chromium	5.28		1.10	1	08/13/2015 04:56	WG808635
Lead	6.04		0.549	1	08/13/2015 04:56	WG808635
Selenium	ND		2.20	1	08/13/2015 04:56	WG808635
Silver	ND		1.10	1	08/13/2015 04:56	WG808635

Volatile Organic Compounds (GC/MS) by Method 8260B

Analyte	Result (dry) mg/kg	Qualifier	RDL (dry) mg/kg	Dilution	Analysis date / time	Batch
Acetone	ND		0.275	5	08/13/2015 05:52	WG808625
Acrylonitrile	ND		0.0549	5	08/13/2015 05:52	WG808625
Benzene	ND		0.00549	5	08/13/2015 05:52	WG808625
Bromobenzene	ND		0.00549	5	08/13/2015 05:52	WG808625
Bromodichloromethane	ND		0.00549	5	08/13/2015 05:52	WG808625
Bromoform	ND		0.00549	5	08/13/2015 05:52	WG808625
Bromomethane	ND		0.0275	5	08/13/2015 05:52	WG808625
n-Butylbenzene	ND		0.00549	5	08/13/2015 05:52	WG808625
sec-Butylbenzene	ND		0.00549	5	08/13/2015 05:52	WG808625
tert-Butylbenzene	ND		0.00549	5	08/13/2015 05:52	WG808625
Carbon tetrachloride	ND		0.00549	5	08/13/2015 05:52	WG808625
Chlorobenzene	ND		0.00549	5	08/13/2015 05:52	WG808625
Chlorodibromomethane	ND		0.00549	5	08/13/2015 05:52	WG808625
Chloroethane	ND		0.0275	5	08/13/2015 05:52	WG808625
2-Chloroethyl vinyl ether	ND		0.275	5	08/13/2015 05:52	WG808625
Chloroform	ND		0.0275	5	08/13/2015 05:52	WG808625
Chloromethane	ND		0.0137	5	08/13/2015 05:52	WG808625
2-Chlorotoluene	ND		0.00549	5	08/13/2015 05:52	WG808625
4-Chlorotoluene	ND		0.00549	5	08/13/2015 05:52	WG808625
1,2-Dibromo-3-Chloropropane	ND		0.0275	5	08/13/2015 05:52	WG808625
1,2-Dibromoethane	ND		0.00549	5	08/13/2015 05:52	WG808625
Dibromomethane	ND		0.00549	5	08/13/2015 05:52	WG808625
1,2-Dichlorobenzene	ND	J4	0.00549	5	08/13/2015 05:52	WG808625
1,3-Dichlorobenzene	ND		0.00549	5	08/13/2015 05:52	WG808625
1,4-Dichlorobenzene	ND	J4	0.00549	5	08/13/2015 05:52	WG808625
Dichlorodifluoromethane	ND		0.0275	5	08/13/2015 05:52	WG808625
1,1-Dichloroethane	ND		0.00549	5	08/13/2015 05:52	WG808625
1,2-Dichloroethane	ND		0.00549	5	08/13/2015 05:52	WG808625
1,1-Dichloroethene	ND		0.00549	5	08/13/2015 05:52	WG808625
cis-1,2-Dichloroethene	ND		0.00549	5	08/13/2015 05:52	WG808625
trans-1,2-Dichloroethene	ND		0.00549	5	08/13/2015 05:52	WG808625
1,2-Dichloropropane	ND		0.00549	5	08/13/2015 05:52	WG808625
1,1-Dichloropropene	ND		0.00549	5	08/13/2015 05:52	WG808625

Volatile Organic Compounds (GC/MS) by Method 8260B

Analyte	Result (dry) mg/kg	Qualifier	RDL (dry) mg/kg	Dilution	Analysis date / time	Batch
1,3-Dichloropropane	ND	J4	0.00549	5	08/13/2015 05:52	WG808625
cis-1,3-Dichloropropene	ND		0.00549	5	08/13/2015 05:52	WG808625
trans-1,3-Dichloropropene	ND		0.00549	5	08/13/2015 05:52	WG808625
2,2-Dichloropropane	ND		0.00549	5	08/13/2015 05:52	WG808625
Dicyclopentadiene	ND		0.00549	5	08/13/2015 05:52	WG808625
Di-isopropyl ether	ND		0.00549	5	08/13/2015 05:52	WG808625
Ethylbenzene	ND		0.00549	5	08/13/2015 05:52	WG808625
Hexachloro-1,3-butadiene	ND		0.00549	5	08/13/2015 05:52	WG808625
Isopropylbenzene	ND		0.00549	5	08/13/2015 05:52	WG808625
p-Isopropyltoluene	ND		0.00549	5	08/13/2015 05:52	WG808625
2-Butanone (MEK)	ND		0.0549	5	08/13/2015 05:52	WG808625
Methylene Chloride	ND		0.0275	5	08/13/2015 05:52	WG808625
4-Methyl-2-pentanone (MIBK)	ND		0.0549	5	08/13/2015 05:52	WG808625
Methyl tert-butyl ether	ND		0.00549	5	08/13/2015 05:52	WG808625
Naphthalene	ND		0.0275	5	08/13/2015 05:52	WG808625
n-Propylbenzene	ND		0.00549	5	08/13/2015 05:52	WG808625
Styrene	ND		0.00549	5	08/13/2015 05:52	WG808625
1,1,1,2-Tetrachloroethane	ND		0.00549	5	08/13/2015 05:52	WG808625
1,1,2,2-Tetrachloroethane	ND		0.00549	5	08/13/2015 05:52	WG808625
1,1,2-Trichlorotrifluoroethane	ND		0.00549	5	08/13/2015 05:52	WG808625
Tetrachloroethene	ND		0.00549	5	08/13/2015 05:52	WG808625
Toluene	ND		0.0275	5	08/13/2015 05:52	WG808625
1,2,3-Trichlorobenzene	ND		0.00549	5	08/13/2015 05:52	WG808625
1,2,4-Trichlorobenzene	ND		0.00549	5	08/13/2015 05:52	WG808625
1,1,1-Trichloroethane	ND		0.00549	5	08/13/2015 05:52	WG808625
1,1,2-Trichloroethane	ND		0.00549	5	08/13/2015 05:52	WG808625
Trichloroethene	ND		0.00549	5	08/13/2015 05:52	WG808625
Trichlorofluoromethane	ND		0.0275	5	08/13/2015 05:52	WG808625
1,2,3-Trichloropropane	ND		0.0137	5	08/13/2015 05:52	WG808625
1,2,4-Trimethylbenzene	0.00734		0.00549	5	08/13/2015 05:52	WG808625
1,2,3-Trimethylbenzene	ND		0.00549	5	08/13/2015 05:52	WG808625
1,3,5-Trimethylbenzene	ND		0.00549	5	08/13/2015 05:52	WG808625
Vinyl chloride	ND		0.00549	5	08/13/2015 05:52	WG808625
Xylenes, Total	ND		0.0165	5	08/13/2015 05:52	WG808625
(S) Toluene-d8	*106*		*88.7-115*		*08/13/2015 05:52*	WG808625
(S) Dibromofluoromethane	*102*		*76.3-123*		*08/13/2015 05:52*	WG808625
(S) 4-Bromofluorobenzene	*90.6*		*69.7-129*		*08/13/2015 05:52*	WG808625

Semi Volatile Organic Compounds (GC/MS) by Method 8270C

Analyte	Result (dry) mg/kg	Qualifier	RDL (dry) mg/kg	Dilution	Analysis date / time	Batch
Acenaphthene	ND		0.362	10	08/13/2015 20:08	WG808662
Acenaphthylene	ND		0.362	10	08/13/2015 20:08	WG808662
Anthracene	ND		0.362	10	08/13/2015 20:08	WG808662
Benzidine	ND		3.66	10	08/13/2015 20:08	WG808662
Benzo(a)anthracene	ND		0.362	10	08/13/2015 20:08	WG808662
Benzo(b)fluoranthene	ND		1.81	50	08/14/2015 12:47	WG808662
Benzo(k)fluoranthene	ND		1.81	50	08/14/2015 12:47	WG808662
Benzo(g,h,i)perylene	ND		1.81	50	08/14/2015 12:47	WG808662
Benzo(a)pyrene	ND		1.81	50	08/14/2015 12:47	WG808662
Bis(2-chlorethoxy)methane	ND		3.66	10	08/13/2015 20:08	WG808662
Bis(2-chloroethyl)ether	ND		3.66	10	08/13/2015 20:08	WG808662
Bis(2-chloroisopropyl)ether	ND		3.66	10	08/13/2015 20:08	WG808662
4-Bromophenyl-phenylether	ND		3.66	10	08/13/2015 20:08	WG808662
2-Chloronaphthalene	ND		0.362	10	08/13/2015 20:08	WG808662
4-Chlorophenyl-phenylether	ND		3.66	10	08/13/2015 20:08	WG808662

Semi Volatile Organic Compounds (GC/MS) by Method 8270C

Analyte	Result (dry) mg/kg	Qualifier	RDL (dry) mg/kg	Dilution	Analysis date / time	Batch
Chrysene	ND		0.362	10	08/13/2015 20:08	WG808662
Dibenz(a,h)anthracene	ND		1.81	50	08/14/2015 12:47	WG808662
3,3-Dichlorobenzidine	ND		3.66	10	08/13/2015 20:08	WG808662
2,4-Dinitrotoluene	ND		3.66	10	08/13/2015 20:08	WG808662
2,6-Dinitrotoluene	ND		3.66	10	08/13/2015 20:08	WG808662
Fluoranthene	ND		0.362	10	08/13/2015 20:08	WG808662
Fluorene	ND		0.362	10	08/13/2015 20:08	WG808662
Hexachlorobenzene	ND		3.66	10	08/13/2015 20:08	WG808662
Hexachloro-1,3-butadiene	ND		3.66	10	08/13/2015 20:08	WG808662
Hexachlorocyclopentadiene	ND		3.66	10	08/13/2015 20:08	WG808662
Hexachloroethane	ND		3.66	10	08/13/2015 20:08	WG808662
Indeno(1,2,3-cd)pyrene	ND		1.81	50	08/14/2015 12:47	WG808662
Isophorone	ND		3.66	10	08/13/2015 20:08	WG808662
Naphthalene	0.806		0.362	10	08/13/2015 20:08	WG808662
Nitrobenzene	ND		3.66	10	08/13/2015 20:08	WG808662
n-Nitrosodimethylamine	ND		3.66	10	08/13/2015 20:08	WG808662
n-Nitrosodiphenylamine	ND		3.66	10	08/13/2015 20:08	WG808662
n-Nitrosodi-n-propylamine	ND		3.66	10	08/13/2015 20:08	WG808662
Phenanthrene	ND		0.362	10	08/13/2015 20:08	WG808662
Benzylbutyl phthalate	ND		3.66	10	08/13/2015 20:08	WG808662
Bis(2-ethylhexyl)phthalate	ND		3.66	10	08/13/2015 20:08	WG808662
Di-n-butyl phthalate	ND		3.66	10	08/13/2015 20:08	WG808662
Diethyl phthalate	ND		3.66	10	08/13/2015 20:08	WG808662
Dimethyl phthalate	ND		3.66	10	08/13/2015 20:08	WG808662
Di-n-octyl phthalate	ND		3.66	10	08/13/2015 20:08	WG808662
Pyrene	ND		0.362	10	08/13/2015 20:08	WG808662
1,2,4-Trichlorobenzene	ND		3.66	10	08/13/2015 20:08	WG808662
4-Chloro-3-methylphenol	ND		3.66	10	08/13/2015 20:08	WG808662
2-Chlorophenol	ND		3.66	10	08/13/2015 20:08	WG808662
2,4-Dichlorophenol	ND		3.66	10	08/13/2015 20:08	WG808662
2,4-Dimethylphenol	ND		3.66	10	08/13/2015 20:08	WG808662
4,6-Dinitro-2-methylphenol	ND		3.66	10	08/13/2015 20:08	WG808662
2,4-Dinitrophenol	ND		3.66	10	08/13/2015 20:08	WG808662
2-Nitrophenol	ND		3.66	10	08/13/2015 20:08	WG808662
4-Nitrophenol	ND		3.66	10	08/13/2015 20:08	WG808662
Pentachlorophenol	ND		3.66	10	08/13/2015 20:08	WG808662
Phenol	ND		3.66	10	08/13/2015 20:08	WG808662
2,4,6-Trichlorophenol	ND		3.66	10	08/13/2015 20:08	WG808662
(S) 2-Fluorophenol	*78.9*		*21.1-116*		*08/13/2015 20:08*	WG808662
(S) Phenol-d5	*79.5*		*26.3-121*		*08/13/2015 20:08*	WG808662
(S) Nitrobenzene-d5	*89.9*		*21.9-129*		*08/13/2015 20:08*	WG808662
(S) 2-Fluorobiphenyl	*81.9*		*34.9-129*		*08/13/2015 20:08*	WG808662
(S) 2,4,6-Tribromophenol	*103*		*21.6-142*		*08/13/2015 20:08*	WG808662
(S) p-Terphenyl-d14	*87.8*		*21.5-128*		*08/13/2015 20:08*	WG808662

Sample Narrative:

8270C L782221-17 WG808662: Dilution due to matrix

Total Solids by Method 2540 G-2011

Analyte	Result %	Qualifier	Dilution	Analysis date / time	Batch
Total Solids	88.7		1	08/13/2015 07:11	WG808615

Volatile Organic Compounds (GC/MS) by Method 8260B

Analyte	Result (dry) mg/kg	Qualifier	RDL (dry) mg/kg	Dilution	Analysis date / time	Batch
Acetone	ND		28.2	500	08/13/2015 06:12	WG808625
Acrylonitrile	ND		5.64	500	08/13/2015 06:12	WG808625
Benzene	ND		0.564	500	08/13/2015 06:12	WG808625
Bromobenzene	ND		0.564	500	08/13/2015 06:12	WG808625
Bromodichloromethane	ND		0.564	500	08/13/2015 06:12	WG808625
Bromoform	ND		0.564	500	08/13/2015 06:12	WG808625
Bromomethane	ND		2.82	500	08/13/2015 06:12	WG808625
n-Butylbenzene	15.3		0.564	500	08/13/2015 06:12	WG808625
sec-Butylbenzene	2.20		0.564	500	08/13/2015 06:12	WG808625
tert-Butylbenzene	ND		0.564	500	08/13/2015 06:12	WG808625
Carbon tetrachloride	ND		0.564	500	08/13/2015 06:12	WG808625
Chlorobenzene	ND		0.564	500	08/13/2015 06:12	WG808625
Chlorodibromomethane	ND		0.564	500	08/13/2015 06:12	WG808625
Chloroethane	ND		2.82	500	08/13/2015 06:12	WG808625
2-Chloroethyl vinyl ether	ND		28.2	500	08/13/2015 06:12	WG808625
Chloroform	ND		2.82	500	08/13/2015 06:12	WG808625
Chloromethane	ND		1.41	500	08/13/2015 06:12	WG808625
2-Chlorotoluene	ND		0.564	500	08/13/2015 06:12	WG808625
4-Chlorotoluene	ND		0.564	500	08/13/2015 06:12	WG808625
1,2-Dibromo-3-Chloropropane	ND		2.82	500	08/13/2015 06:12	WG808625
1,2-Dibromoethane	ND		0.564	500	08/13/2015 06:12	WG808625
Dibromomethane	ND		0.564	500	08/13/2015 06:12	WG808625
1,2-Dichlorobenzene	ND	J4	0.564	500	08/13/2015 06:12	WG808625
1,3-Dichlorobenzene	ND		0.564	500	08/13/2015 06:12	WG808625
1,4-Dichlorobenzene	ND	J4	0.564	500	08/13/2015 06:12	WG808625
Dichlorodifluoromethane	ND		2.82	500	08/13/2015 06:12	WG808625
1,1-Dichloroethane	ND		0.564	500	08/13/2015 06:12	WG808625
1,2-Dichloroethane	ND		0.564	500	08/13/2015 06:12	WG808625
1,1-Dichloroethene	ND		0.564	500	08/13/2015 06:12	WG808625
cis-1,2-Dichloroethene	ND		0.564	500	08/13/2015 06:12	WG808625
trans-1,2-Dichloroethene	ND		0.564	500	08/13/2015 06:12	WG808625
1,2-Dichloropropane	ND		0.564	500	08/13/2015 06:12	WG808625
1,1-Dichloropropene	ND		0.564	500	08/13/2015 06:12	WG808625
1,3-Dichloropropane	ND	J4	0.564	500	08/13/2015 06:12	WG808625
cis-1,3-Dichloropropene	ND		0.564	500	08/13/2015 06:12	WG808625
trans-1,3-Dichloropropene	ND		0.564	500	08/13/2015 06:12	WG808625
2,2-Dichloropropane	ND		0.564	500	08/13/2015 06:12	WG808625
Dicyclopentadiene	362		11.3	10000	08/14/2015 02:09	WG809036
Di-isopropyl ether	ND		0.564	500	08/13/2015 06:12	WG808625
Ethylbenzene	7.18		0.564	500	08/13/2015 06:12	WG808625
Hexachloro-1,3-butadiene	ND		0.564	500	08/13/2015 06:12	WG808625
Isopropylbenzene	2.11		0.564	500	08/13/2015 06:12	WG808625
p-Isopropyltoluene	12.5		0.564	500	08/13/2015 06:12	WG808625
2-Butanone (MEK)	ND		5.64	500	08/13/2015 06:12	WG808625
Methylene Chloride	ND		2.82	500	08/13/2015 06:12	WG808625
4-Methyl-2-pentanone (MIBK)	ND		5.64	500	08/13/2015 06:12	WG808625
Methyl tert-butyl ether	ND		0.564	500	08/13/2015 06:12	WG808625
Naphthalene	1860		56.4	10000	08/14/2015 02:09	WG809036
n-Propylbenzene	21.6		0.564	500	08/13/2015 06:12	WG808625
Styrene	2.68		0.564	500	08/13/2015 06:12	WG808625

Volatile Organic Compounds (GC/MS) by Method 8260B

Analyte	Result (dry) mg/kg	Qualifier	RDL (dry) mg/kg	Dilution	Analysis date / time	Batch
1,1,1,2-Tetrachloroethane	ND		0.564	500	08/13/2015 06:12	WG808625
1,1,2,2-Tetrachloroethane	ND		0.564	500	08/13/2015 06:12	WG808625
1,1,2-Trichlorotrifluoroethane	ND		0.564	500	08/13/2015 06:12	WG808625
Tetrachloroethene	ND		0.564	500	08/13/2015 06:12	WG808625
Toluene	ND		2.82	500	08/13/2015 06:12	WG808625
1,2,3-Trichlorobenzene	ND		0.564	500	08/13/2015 06:12	WG808625
1,2,4-Trichlorobenzene	ND		0.564	500	08/13/2015 06:12	WG808625
1,1,1-Trichloroethane	ND		0.564	500	08/13/2015 06:12	WG808625
1,1,2-Trichloroethane	ND		0.564	500	08/13/2015 06:12	WG808625
Trichloroethene	ND		0.564	500	08/13/2015 06:12	WG808625
Trichlorofluoromethane	ND		2.82	500	08/13/2015 06:12	WG808625
1,2,3-Trichloropropane	ND		1.41	500	08/13/2015 06:12	WG808625
1,2,4-Trimethylbenzene	690		11.3	10000	08/14/2015 02:09	WG809036
1,2,3-Trimethylbenzene	353		11.3	10000	08/14/2015 02:09	WG809036
1,3,5-Trimethylbenzene	72.3		0.564	500	08/13/2015 06:12	WG808625
Vinyl chloride	ND		0.564	500	08/13/2015 06:12	WG808625
Xylenes, Total	49.7		1.69	500	08/13/2015 06:12	WG808625
(S) Toluene-d8	*108*		*88.7-115*		*08/13/2015 06:12*	WG808625
(S) Dibromofluoromethane	*101*		*76.3-123*		*08/13/2015 06:12*	WG808625
(S) 4-Bromofluorobenzene	*104*		*69.7-129*		*08/13/2015 06:12*	WG808625

Semi Volatile Organic Compounds (GC/MS) by Method 8270C

Analyte	Result (dry) mg/kg	Qualifier	RDL (dry) mg/kg	Dilution	Analysis date / time	Batch
Acenaphthene	ND		3.72	100	08/13/2015 21:41	WG808662
Acenaphthylene	ND		3.72	100	08/13/2015 21:41	WG808662
Anthracene	ND		3.72	100	08/13/2015 21:41	WG808662
Benzidine	ND		37.5	100	08/13/2015 21:41	WG808662
Benzo(a)anthracene	ND		3.72	100	08/13/2015 21:41	WG808662
Benzo(b)fluoranthene	ND		3.72	100	08/13/2015 21:41	WG808662
Benzo(k)fluoranthene	ND		3.72	100	08/13/2015 21:41	WG808662
Benzo(g,h,i)perylene	ND		3.72	100	08/13/2015 21:41	WG808662
Benzo(a)pyrene	ND		3.72	100	08/13/2015 21:41	WG808662
Bis(2-chlorethoxy)methane	ND		37.5	100	08/13/2015 21:41	WG808662
Bis(2-chloroethyl)ether	ND		37.5	100	08/13/2015 21:41	WG808662
Bis(2-chloroisopropyl)ether	ND		37.5	100	08/13/2015 21:41	WG808662
4-Bromophenyl-phenylether	ND		37.5	100	08/13/2015 21:41	WG808662
2-Chloronaphthalene	ND		3.72	100	08/13/2015 21:41	WG808662
4-Chlorophenyl-phenylether	ND		37.5	100	08/13/2015 21:41	WG808662
Chrysene	ND		3.72	100	08/13/2015 21:41	WG808662
Dibenz(a,h)anthracene	ND		3.72	100	08/13/2015 21:41	WG808662
3,3-Dichlorobenzidine	ND		37.5	100	08/13/2015 21:41	WG808662
2,4-Dinitrotoluene	ND		37.5	100	08/13/2015 21:41	WG808662
2,6-Dinitrotoluene	ND		37.5	100	08/13/2015 21:41	WG808662
Fluoranthene	ND		3.72	100	08/13/2015 21:41	WG808662
Fluorene	ND		3.72	100	08/13/2015 21:41	WG808662
Hexachlorobenzene	ND		37.5	100	08/13/2015 21:41	WG808662
Hexachloro-1,3-butadiene	ND		37.5	100	08/13/2015 21:41	WG808662
Hexachlorocyclopentadiene	ND		37.5	100	08/13/2015 21:41	WG808662
Hexachloroethane	ND		37.5	100	08/13/2015 21:41	WG808662
Indeno(1,2,3-cd)pyrene	ND		3.72	100	08/13/2015 21:41	WG808662
Isophorone	ND		37.5	100	08/13/2015 21:41	WG808662
Naphthalene	1530		37.2	1000	08/14/2015 12:01	WG808662
Nitrobenzene	ND		37.5	100	08/13/2015 21:41	WG808662
n-Nitrosodimethylamine	ND		37.5	100	08/13/2015 21:41	WG808662
n-Nitrosodiphenylamine	ND		37.5	100	08/13/2015 21:41	WG808662

Semi Volatile Organic Compounds (GC/MS) by Method 8270C

Analyte	Result (dry) mg/kg	Qualifier	RDL (dry) mg/kg	Dilution	Analysis date / time	Batch
n-Nitrosodi-n-propylamine	ND		37.5	100	08/13/2015 21:41	WG808662
Phenanthrene	ND		3.72	100	08/13/2015 21:41	WG808662
Benzylbutyl phthalate	ND		37.5	100	08/13/2015 21:41	WG808662
Bis(2-ethylhexyl)phthalate	ND		37.5	100	08/13/2015 21:41	WG808662
Di-n-butyl phthalate	ND		37.5	100	08/13/2015 21:41	WG808662
Diethyl phthalate	ND		37.5	100	08/13/2015 21:41	WG808662
Dimethyl phthalate	ND		37.5	100	08/13/2015 21:41	WG808662
Di-n-octyl phthalate	ND		37.5	100	08/13/2015 21:41	WG808662
Pyrene	ND		3.72	100	08/13/2015 21:41	WG808662
1,2,4-Trichlorobenzene	ND		37.5	100	08/13/2015 21:41	WG808662
4-Chloro-3-methylphenol	ND		37.5	100	08/13/2015 21:41	WG808662
2-Chlorophenol	ND		37.5	100	08/13/2015 21:41	WG808662
2,4-Dichlorophenol	ND		37.5	100	08/13/2015 21:41	WG808662
2,4-Dimethylphenol	ND		37.5	100	08/13/2015 21:41	WG808662
4,6-Dinitro-2-methylphenol	ND		37.5	100	08/13/2015 21:41	WG808662
2,4-Dinitrophenol	ND		37.5	100	08/13/2015 21:41	WG808662
2-Nitrophenol	ND		37.5	100	08/13/2015 21:41	WG808662
4-Nitrophenol	ND		37.5	100	08/13/2015 21:41	WG808662
Pentachlorophenol	ND		37.5	100	08/13/2015 21:41	WG808662
Phenol	ND		37.5	100	08/13/2015 21:41	WG808662
2,4,6-Trichlorophenol	ND		37.5	100	08/13/2015 21:41	WG808662
(S) 2-Fluorophenol	*61.5*	J7	*21.1-116*		*08/13/2015 21:41*	WG808662
(S) Phenol-d5	*105*	J7	*26.3-121*		*08/13/2015 21:41*	WG808662
(S) Nitrobenzene-d5	*486*	J7	*21.9-129*		*08/13/2015 21:41*	WG808662
(S) 2-Fluorobiphenyl	*78.1*	J7	*34.9-129*		*08/13/2015 21:41*	WG808662
(S) 2,4,6-Tribromophenol	*80.2*	J7	*21.6-142*		*08/13/2015 21:41*	WG808662
(S) p-Terphenyl-d14	*130*	J7	*21.5-128*		*08/13/2015 21:41*	WG808662

Sample Narrative:

8270C L782221-18 WG808662: Dilution due to matrix

Total Solids by Method 2540 G-2011

Analyte	Result %	Qualifier	Dilution	Analysis date / time	Batch
Total Solids	91.1		1	08/13/2015 07:11	WG808615

Mercury by Method 7471A

Analyte	Result (dry) mg/kg	Qualifier	RDL (dry) mg/kg	Dilution	Analysis date / time	Batch
Mercury	0.0457		0.0220	1	08/13/2015 13:03	WG808666

Metals (ICP) by Method 6010B

Analyte	Result (dry) mg/kg	Qualifier	RDL (dry) mg/kg	Dilution	Analysis date / time	Batch
Arsenic	2.46		2.20	1	08/13/2015 04:59	WG808635
Barium	20.0		0.549	1	08/13/2015 04:59	WG808635
Cadmium	ND		0.549	1	08/13/2015 04:59	WG808635
Chromium	8.03		1.10	1	08/13/2015 04:59	WG808635
Lead	5.87		0.549	1	08/13/2015 04:59	WG808635
Selenium	ND		2.20	1	08/13/2015 04:59	WG808635
Silver	ND		1.10	1	08/13/2015 04:59	WG808635

Volatile Organic Compounds (GC/MS) by Method 8260B

Analyte	Result (dry) mg/kg	Qualifier	RDL (dry) mg/kg	Dilution	Analysis date / time	Batch
Acetone	ND		0.274	5	08/13/2015 06:33	WG808625
Acrylonitrile	ND		0.0549	5	08/13/2015 06:33	WG808625
Benzene	ND		0.00549	5	08/13/2015 06:33	WG808625
Bromobenzene	ND		0.00549	5	08/13/2015 06:33	WG808625
Bromodichloromethane	ND		0.00549	5	08/13/2015 06:33	WG808625
Bromoform	ND		0.00549	5	08/13/2015 06:33	WG808625
Bromomethane	ND		0.0274	5	08/13/2015 06:33	WG808625
n-Butylbenzene	ND		0.00549	5	08/13/2015 06:33	WG808625
sec-Butylbenzene	ND		0.00549	5	08/13/2015 06:33	WG808625
tert-Butylbenzene	ND		0.00549	5	08/13/2015 06:33	WG808625
Carbon tetrachloride	ND		0.00549	5	08/13/2015 06:33	WG808625
Chlorobenzene	ND		0.00549	5	08/13/2015 06:33	WG808625
Chlorodibromomethane	ND		0.00549	5	08/13/2015 06:33	WG808625
Chloroethane	ND		0.0274	5	08/13/2015 06:33	WG808625
2-Chloroethyl vinyl ether	ND		0.274	5	08/13/2015 06:33	WG808625
Chloroform	ND		0.0274	5	08/13/2015 06:33	WG808625
Chloromethane	ND		0.0137	5	08/13/2015 06:33	WG808625
2-Chlorotoluene	ND		0.00549	5	08/13/2015 06:33	WG808625
4-Chlorotoluene	ND		0.00549	5	08/13/2015 06:33	WG808625
1,2-Dibromo-3-Chloropropane	ND		0.0274	5	08/13/2015 06:33	WG808625
1,2-Dibromoethane	ND		0.00549	5	08/13/2015 06:33	WG808625
Dibromomethane	ND		0.00549	5	08/13/2015 06:33	WG808625
1,2-Dichlorobenzene	ND	J4	0.00549	5	08/13/2015 06:33	WG808625
1,3-Dichlorobenzene	ND		0.00549	5	08/13/2015 06:33	WG808625
1,4-Dichlorobenzene	ND	J4	0.00549	5	08/13/2015 06:33	WG808625
Dichlorodifluoromethane	ND		0.0274	5	08/13/2015 06:33	WG808625
1,1-Dichloroethane	ND		0.00549	5	08/13/2015 06:33	WG808625
1,2-Dichloroethane	ND		0.00549	5	08/13/2015 06:33	WG808625
1,1-Dichloroethene	ND		0.00549	5	08/13/2015 06:33	WG808625
cis-1,2-Dichloroethene	ND		0.00549	5	08/13/2015 06:33	WG808625
trans-1,2-Dichloroethene	ND		0.00549	5	08/13/2015 06:33	WG808625
1,2-Dichloropropane	ND		0.00549	5	08/13/2015 06:33	WG808625
1,1-Dichloropropene	ND		0.00549	5	08/13/2015 06:33	WG808625

Volatile Organic Compounds (GC/MS) by Method 8260B

Analyte	Result (dry) mg/kg	Qualifier	RDL (dry) mg/kg	Dilution	Analysis date / time	Batch
1,3-Dichloropropane	ND	J4	0.00549	5	08/13/2015 06:33	WG808625
cis-1,3-Dichloropropene	ND		0.00549	5	08/13/2015 06:33	WG808625
trans-1,3-Dichloropropene	ND		0.00549	5	08/13/2015 06:33	WG808625
2,2-Dichloropropane	ND		0.00549	5	08/13/2015 06:33	WG808625
Dicyclopentadiene	ND		0.00549	5	08/13/2015 06:33	WG808625
Di-isopropyl ether	ND		0.00549	5	08/13/2015 06:33	WG808625
Ethylbenzene	ND		0.00549	5	08/13/2015 06:33	WG808625
Hexachloro-1,3-butadiene	ND		0.00549	5	08/13/2015 06:33	WG808625
Isopropylbenzene	ND		0.00549	5	08/13/2015 06:33	WG808625
p-Isopropyltoluene	ND		0.00549	5	08/13/2015 06:33	WG808625
2-Butanone (MEK)	ND		0.0549	5	08/13/2015 06:33	WG808625
Methylene Chloride	ND		0.0274	5	08/13/2015 06:33	WG808625
4-Methyl-2-pentanone (MIBK)	ND		0.0549	5	08/13/2015 06:33	WG808625
Methyl tert-butyl ether	ND		0.00549	5	08/13/2015 06:33	WG808625
Naphthalene	0.0377		0.0274	5	08/14/2015 02:29	WG809036
n-Propylbenzene	ND		0.00549	5	08/13/2015 06:33	WG808625
Styrene	ND		0.00549	5	08/13/2015 06:33	WG808625
1,1,1,2-Tetrachloroethane	ND		0.00549	5	08/13/2015 06:33	WG808625
1,1,2,2-Tetrachloroethane	ND		0.00549	5	08/13/2015 06:33	WG808625
1,1,2-Trichlorotrifluoroethane	ND		0.00549	5	08/13/2015 06:33	WG808625
Tetrachloroethene	ND		0.00549	5	08/13/2015 06:33	WG808625
Toluene	ND		0.0274	5	08/13/2015 06:33	WG808625
1,2,3-Trichlorobenzene	ND		0.00549	5	08/13/2015 06:33	WG808625
1,2,4-Trichlorobenzene	ND		0.00549	5	08/13/2015 06:33	WG808625
1,1,1-Trichloroethane	ND		0.00549	5	08/13/2015 06:33	WG808625
1,1,2-Trichloroethane	ND		0.00549	5	08/13/2015 06:33	WG808625
Trichloroethene	ND		0.00549	5	08/13/2015 06:33	WG808625
Trichlorofluoromethane	ND		0.0274	5	08/13/2015 06:33	WG808625
1,2,3-Trichloropropane	ND		0.0137	5	08/13/2015 06:33	WG808625
1,2,4-Trimethylbenzene	0.0220		0.00549	5	08/14/2015 02:29	WG809036
1,2,3-Trimethylbenzene	0.0217		0.00549	5	08/14/2015 02:29	WG809036
1,3,5-Trimethylbenzene	0.00688		0.00549	5	08/13/2015 06:33	WG808625
Vinyl chloride	ND		0.00549	5	08/13/2015 06:33	WG808625
Xylenes, Total	ND		0.0165	5	08/13/2015 06:33	WG808625
(S) Toluene-d8	*108*		*88.7-115*		*08/13/2015 06:33*	WG808625
(S) Dibromofluoromethane	*99.6*		*76.3-123*		*08/13/2015 06:33*	WG808625
(S) 4-Bromofluorobenzene	*94.1*		*69.7-129*		*08/13/2015 06:33*	WG808625

Semi Volatile Organic Compounds (GC/MS) by Method 8270C

Analyte	Result (dry) mg/kg	Qualifier	RDL (dry) mg/kg	Dilution	Analysis date / time	Batch
Acenaphthene	ND		0.0362	1	08/13/2015 15:30	WG808662
Acenaphthylene	ND		0.0362	1	08/13/2015 15:30	WG808662
Anthracene	ND		0.362	10	08/14/2015 08:30	WG808662
Benzidine	ND		0.365	1	08/13/2015 15:30	WG808662
Benzo(a)anthracene	ND		0.0362	1	08/13/2015 15:30	WG808662
Benzo(b)fluoranthene	ND		0.0362	1	08/13/2015 15:30	WG808662
Benzo(k)fluoranthene	ND		0.0362	1	08/13/2015 15:30	WG808662
Benzo(g,h,i)perylene	ND		0.0362	1	08/13/2015 15:30	WG808662
Benzo(a)pyrene	ND		0.0362	1	08/13/2015 15:30	WG808662
Bis(2-chlorethoxy)methane	ND		0.365	1	08/13/2015 15:30	WG808662
Bis(2-chloroethyl)ether	ND		0.365	1	08/13/2015 15:30	WG808662
Bis(2-chloroisopropyl)ether	ND		0.365	1	08/13/2015 15:30	WG808662
4-Bromophenyl-phenylether	ND		3.65	10	08/14/2015 08:30	WG808662
2-Chloronaphthalene	ND		0.0362	1	08/13/2015 15:30	WG808662
4-Chlorophenyl-phenylether	ND		0.365	1	08/13/2015 15:30	WG808662

Semi Volatile Organic Compounds (GC/MS) by Method 8270C

Analyte	Result (dry) mg/kg	Qualifier	RDL (dry) mg/kg	Dilution	Analysis date / time	Batch
Chrysene	ND		0.0362	1	08/13/2015 15:30	WG808662
Dibenz(a,h)anthracene	ND		0.0362	1	08/13/2015 15:30	WG808662
3,3-Dichlorobenzidine	ND		0.365	1	08/13/2015 15:30	WG808662
2,4-Dinitrotoluene	ND		0.365	1	08/13/2015 15:30	WG808662
2,6-Dinitrotoluene	ND		0.365	1	08/13/2015 15:30	WG808662
Fluoranthene	ND		0.362	10	08/14/2015 08:30	WG808662
Fluorene	ND		0.0362	1	08/13/2015 15:30	WG808662
Hexachlorobenzene	ND		3.65	10	08/14/2015 08:30	WG808662
Hexachloro-1,3-butadiene	ND		0.365	1	08/13/2015 15:30	WG808662
Hexachlorocyclopentadiene	ND		0.365	1	08/13/2015 15:30	WG808662
Hexachloroethane	ND		0.365	1	08/13/2015 15:30	WG808662
Indeno(1,2,3-cd)pyrene	ND		0.0362	1	08/13/2015 15:30	WG808662
Isophorone	ND		0.365	1	08/13/2015 15:30	WG808662
Naphthalene	0.239		0.0362	1	08/13/2015 15:30	WG808662
Nitrobenzene	ND		0.365	1	08/13/2015 15:30	WG808662
n-Nitrosodimethylamine	ND		0.365	1	08/13/2015 15:30	WG808662
n-Nitrosodiphenylamine	ND		3.65	10	08/14/2015 08:30	WG808662
n-Nitrosodi-n-propylamine	ND		0.365	1	08/13/2015 15:30	WG808662
Phenanthrene	ND		0.362	10	08/14/2015 08:30	WG808662
Benzylbutyl phthalate	ND		0.365	1	08/13/2015 15:30	WG808662
Bis(2-ethylhexyl)phthalate	ND		0.365	1	08/13/2015 15:30	WG808662
Di-n-butyl phthalate	ND		3.65	10	08/14/2015 08:30	WG808662
Diethyl phthalate	ND		0.365	1	08/13/2015 15:30	WG808662
Dimethyl phthalate	ND		0.365	1	08/13/2015 15:30	WG808662
Di-n-octyl phthalate	ND		0.365	1	08/13/2015 15:30	WG808662
Pyrene	ND		0.0362	1	08/13/2015 15:30	WG808662
1,2,4-Trichlorobenzene	ND		0.365	1	08/13/2015 15:30	WG808662
4-Chloro-3-methylphenol	ND		0.365	1	08/13/2015 15:30	WG808662
2-Chlorophenol	ND		0.365	1	08/13/2015 15:30	WG808662
2,4-Dichlorophenol	ND		0.365	1	08/13/2015 15:30	WG808662
2,4-Dimethylphenol	ND		0.365	1	08/13/2015 15:30	WG808662
4,6-Dinitro-2-methylphenol	ND		3.65	10	08/14/2015 08:30	WG808662
2,4-Dinitrophenol	ND		0.365	1	08/13/2015 15:30	WG808662
2-Nitrophenol	ND		0.365	1	08/13/2015 15:30	WG808662
4-Nitrophenol	ND		0.365	1	08/13/2015 15:30	WG808662
Pentachlorophenol	ND		3.65	10	08/14/2015 08:30	WG808662
Phenol	ND		0.365	1	08/13/2015 15:30	WG808662
2,4,6-Trichlorophenol	ND		0.365	1	08/13/2015 15:30	WG808662
(S) 2-Fluorophenol	*75.3*		*21.1-116*		*08/13/2015 15:30*	WG808662
(S) Phenol-d5	*80.8*		*26.3-121*		*08/13/2015 15:30*	WG808662
(S) Nitrobenzene-d5	*80.6*		*21.9-129*		*08/13/2015 15:30*	WG808662
(S) 2-Fluorobiphenyl	*77.3*		*34.9-129*		*08/13/2015 15:30*	WG808662
(S) 2,4,6-Tribromophenol	*108*		*21.6-142*		*08/14/2015 08:30*	WG808662
(S) p-Terphenyl-d14	*81.5*		*21.5-128*		*08/13/2015 15:30*	WG808662

Sample Narrative:

8270C L782221-19 WG808662: Dilution due to matrix

Total Solids by Method 2540 G-2011

Analyte	Result %	Qualifier	Dilution	Analysis date / time	Batch
Total Solids	87.8		1	08/13/2015 07:12	WG808615

Volatile Organic Compounds (GC/MS) by Method 8260B

Analyte	Result (dry) mg/kg	Qualifier	RDL (dry) mg/kg	Dilution	Analysis date / time	Batch
Acetone	ND		1.42	25	08/13/2015 06:53	WG808625
Acrylonitrile	ND		0.285	25	08/13/2015 06:53	WG808625
Benzene	ND		0.0285	25	08/13/2015 06:53	WG808625
Bromobenzene	ND		0.0285	25	08/13/2015 06:53	WG808625
Bromodichloromethane	ND		0.0285	25	08/13/2015 06:53	WG808625
Bromoform	ND		0.0285	25	08/13/2015 06:53	WG808625
Bromomethane	ND		0.142	25	08/13/2015 06:53	WG808625
n-Butylbenzene	0.106		0.0285	25	08/13/2015 06:53	WG808625
sec-Butylbenzene	ND		0.0285	25	08/13/2015 06:53	WG808625
tert-Butylbenzene	ND		0.0285	25	08/13/2015 06:53	WG808625
Carbon tetrachloride	ND		0.0285	25	08/13/2015 06:53	WG808625
Chlorobenzene	ND		0.0285	25	08/13/2015 06:53	WG808625
Chlorodibromomethane	ND		0.0285	25	08/13/2015 06:53	WG808625
Chloroethane	ND		0.142	25	08/13/2015 06:53	WG808625
2-Chloroethyl vinyl ether	ND		1.42	25	08/13/2015 06:53	WG808625
Chloroform	ND		0.142	25	08/13/2015 06:53	WG808625
Chloromethane	ND		0.0712	25	08/13/2015 06:53	WG808625
2-Chlorotoluene	ND		0.0285	25	08/13/2015 06:53	WG808625
4-Chlorotoluene	ND		0.0285	25	08/13/2015 06:53	WG808625
1,2-Dibromo-3-Chloropropane	ND		0.142	25	08/13/2015 06:53	WG808625
1,2-Dibromoethane	ND		0.0285	25	08/13/2015 06:53	WG808625
Dibromomethane	ND		0.0285	25	08/13/2015 06:53	WG808625
1,2-Dichlorobenzene	ND	J4	0.0285	25	08/13/2015 06:53	WG808625
1,3-Dichlorobenzene	ND		0.0285	25	08/13/2015 06:53	WG808625
1,4-Dichlorobenzene	ND	J4	0.0285	25	08/13/2015 06:53	WG808625
Dichlorodifluoromethane	ND		0.142	25	08/13/2015 06:53	WG808625
1,1-Dichloroethane	ND		0.0285	25	08/13/2015 06:53	WG808625
1,2-Dichloroethane	ND		0.0285	25	08/13/2015 06:53	WG808625
1,1-Dichloroethene	ND		0.0285	25	08/13/2015 06:53	WG808625
cis-1,2-Dichloroethene	ND		0.0285	25	08/13/2015 06:53	WG808625
trans-1,2-Dichloroethene	ND		0.0285	25	08/13/2015 06:53	WG808625
1,2-Dichloropropane	ND		0.0285	25	08/13/2015 06:53	WG808625
1,1-Dichloropropene	ND		0.0285	25	08/13/2015 06:53	WG808625
1,3-Dichloropropane	ND	J4	0.0285	25	08/13/2015 06:53	WG808625
cis-1,3-Dichloropropene	ND		0.0285	25	08/13/2015 06:53	WG808625
trans-1,3-Dichloropropene	ND		0.0285	25	08/13/2015 06:53	WG808625
2,2-Dichloropropane	ND		0.0285	25	08/13/2015 06:53	WG808625
Dicyclopentadiene	0.318		0.0285	25	08/13/2015 06:53	WG808625
Di-isopropyl ether	ND		0.0285	25	08/13/2015 06:53	WG808625
Ethylbenzene	0.0563		0.0285	25	08/13/2015 06:53	WG808625
Hexachloro-1,3-butadiene	ND		0.0285	25	08/13/2015 06:53	WG808625
Isopropylbenzene	ND		0.0285	25	08/13/2015 06:53	WG808625
p-Isopropyltoluene	0.0405		0.0285	25	08/13/2015 06:53	WG808625
2-Butanone (MEK)	ND		0.285	25	08/13/2015 06:53	WG808625
Methylene Chloride	ND		0.142	25	08/13/2015 06:53	WG808625
4-Methyl-2-pentanone (MIBK)	ND		0.285	25	08/13/2015 06:53	WG808625
Methyl tert-butyl ether	ND		0.0285	25	08/13/2015 06:53	WG808625
Naphthalene	5.10		0.142	25	08/13/2015 06:53	WG808625
n-Propylbenzene	0.137		0.0285	25	08/13/2015 06:53	WG808625
Styrene	ND		0.0285	25	08/13/2015 06:53	WG808625

Volatile Organic Compounds (GC/MS) by Method 8260B

Analyte	Result (dry) mg/kg	Qualifier	RDL (dry) mg/kg	Dilution	Analysis date / time	Batch
1,1,1,2-Tetrachloroethane	ND		0.0285	25	08/13/2015 06:53	WG808625
1,1,2,2-Tetrachloroethane	ND		0.0285	25	08/13/2015 06:53	WG808625
1,1,2-Trichlorotrifluoroethane	ND		0.0285	25	08/13/2015 06:53	WG808625
Tetrachloroethene	ND		0.0285	25	08/13/2015 06:53	WG808625
Toluene	ND		0.142	25	08/13/2015 06:53	WG808625
1,2,3-Trichlorobenzene	ND		0.0285	25	08/13/2015 06:53	WG808625
1,2,4-Trichlorobenzene	ND		0.0285	25	08/13/2015 06:53	WG808625
1,1,1-Trichloroethane	ND		0.0285	25	08/13/2015 06:53	WG808625
1,1,2-Trichloroethane	ND		0.0285	25	08/13/2015 06:53	WG808625
Trichloroethene	ND		0.0285	25	08/13/2015 06:53	WG808625
Trichlorofluoromethane	ND		0.142	25	08/13/2015 06:53	WG808625
1,2,3-Trichloropropane	ND		0.0712	25	08/13/2015 06:53	WG808625
1,2,4-Trimethylbenzene	1.55		0.0285	25	08/13/2015 06:53	WG808625
1,2,3-Trimethylbenzene	0.671		0.0285	25	08/13/2015 06:53	WG808625
1,3,5-Trimethylbenzene	0.370		0.0285	25	08/13/2015 06:53	WG808625
Vinyl chloride	ND		0.0285	25	08/13/2015 06:53	WG808625
Xylenes, Total	0.101		0.0855	25	08/13/2015 06:53	WG808625
(S) Toluene-d8	*105*		*88.7-115*		*08/13/2015 06:53*	WG808625
(S) Dibromofluoromethane	*99.4*		*76.3-123*		*08/13/2015 06:53*	WG808625
(S) 4-Bromofluorobenzene	*97.3*		*69.7-129*		*08/13/2015 06:53*	WG808625

Semi Volatile Organic Compounds (GC/MS) by Method 8270C

Analyte	Result (dry) mg/kg	Qualifier	RDL (dry) mg/kg	Dilution	Analysis date / time	Batch
Acenaphthene	ND		0.0376	1	08/13/2015 15:54	WG808662
Acenaphthylene	ND		0.0376	1	08/13/2015 15:54	WG808662
Anthracene	ND		0.0376	1	08/13/2015 15:54	WG808662
Benzidine	ND		0.379	1	08/13/2015 15:54	WG808662
Benzo(a)anthracene	ND		0.0376	1	08/13/2015 15:54	WG808662
Benzo(b)fluoranthene	ND		0.0376	1	08/13/2015 15:54	WG808662
Benzo(k)fluoranthene	ND		0.0376	1	08/13/2015 15:54	WG808662
Benzo(g,h,i)perylene	ND		0.0376	1	08/13/2015 15:54	WG808662
Benzo(a)pyrene	ND		0.0376	1	08/13/2015 15:54	WG808662
Bis(2-chlorethoxy)methane	ND		0.379	1	08/13/2015 15:54	WG808662
Bis(2-chloroethyl)ether	ND		0.379	1	08/13/2015 15:54	WG808662
Bis(2-chloroisopropyl)ether	ND		0.379	1	08/13/2015 15:54	WG808662
4-Bromophenyl-phenylether	ND		0.379	1	08/13/2015 15:54	WG808662
2-Chloronaphthalene	ND		0.0376	1	08/13/2015 15:54	WG808662
4-Chlorophenyl-phenylether	ND		0.379	1	08/13/2015 15:54	WG808662
Chrysene	ND		0.0376	1	08/13/2015 15:54	WG808662
Dibenz(a,h)anthracene	ND		0.0376	1	08/13/2015 15:54	WG808662
3,3-Dichlorobenzidine	ND		0.379	1	08/13/2015 15:54	WG808662
2,4-Dinitrotoluene	ND		0.379	1	08/13/2015 15:54	WG808662
2,6-Dinitrotoluene	ND		0.379	1	08/13/2015 15:54	WG808662
Fluoranthene	ND		0.0376	1	08/13/2015 15:54	WG808662
Fluorene	ND		0.0376	1	08/13/2015 15:54	WG808662
Hexachlorobenzene	ND		0.379	1	08/13/2015 15:54	WG808662
Hexachloro-1,3-butadiene	ND		0.379	1	08/13/2015 15:54	WG808662
Hexachlorocyclopentadiene	ND		0.379	1	08/13/2015 15:54	WG808662
Hexachloroethane	ND		0.379	1	08/13/2015 15:54	WG808662
Indeno(1,2,3-cd)pyrene	ND		0.0376	1	08/13/2015 15:54	WG808662
Isophorone	ND		0.379	1	08/13/2015 15:54	WG808662
Naphthalene	13.9		0.752	20	08/14/2015 08:54	WG808662
Nitrobenzene	ND		0.379	1	08/13/2015 15:54	WG808662
n-Nitrosodimethylamine	ND		0.379	1	08/13/2015 15:54	WG808662
n-Nitrosodiphenylamine	ND		0.379	1	08/13/2015 15:54	WG808662

Semi Volatile Organic Compounds (GC/MS) by Method 8270C

Analyte	Result (dry) mg/kg	Qualifier	RDL (dry) mg/kg	Dilution	Analysis date / time	Batch
n-Nitrosodi-n-propylamine	ND		0.379	1	08/13/2015 15:54	WG808662
Phenanthrene	ND		0.0376	1	08/13/2015 15:54	WG808662
Benzylbutyl phthalate	ND		0.379	1	08/13/2015 15:54	WG808662
Bis(2-ethylhexyl)phthalate	ND		0.379	1	08/13/2015 15:54	WG808662
Di-n-butyl phthalate	ND		0.379	1	08/13/2015 15:54	WG808662
Diethyl phthalate	ND		0.379	1	08/13/2015 15:54	WG808662
Dimethyl phthalate	ND		0.379	1	08/13/2015 15:54	WG808662
Di-n-octyl phthalate	ND		0.379	1	08/13/2015 15:54	WG808662
Pyrene	ND		0.0376	1	08/13/2015 15:54	WG808662
1,2,4-Trichlorobenzene	ND		0.379	1	08/13/2015 15:54	WG808662
4-Chloro-3-methylphenol	ND		0.379	1	08/13/2015 15:54	WG808662
2-Chlorophenol	ND		0.379	1	08/13/2015 15:54	WG808662
2,4-Dichlorophenol	ND		0.379	1	08/13/2015 15:54	WG808662
2,4-Dimethylphenol	ND		0.379	1	08/13/2015 15:54	WG808662
4,6-Dinitro-2-methylphenol	ND		0.379	1	08/13/2015 15:54	WG808662
2,4-Dinitrophenol	ND		0.379	1	08/13/2015 15:54	WG808662
2-Nitrophenol	ND		0.379	1	08/13/2015 15:54	WG808662
4-Nitrophenol	ND		0.379	1	08/13/2015 15:54	WG808662
Pentachlorophenol	ND		0.379	1	08/13/2015 15:54	WG808662
Phenol	ND		0.379	1	08/13/2015 15:54	WG808662
2,4,6-Trichlorophenol	ND		0.379	1	08/13/2015 15:54	WG808662
(S) 2-Fluorophenol	*79.3*		*21.1-116*		*08/13/2015 15:54*	WG808662
(S) Phenol-d5	*82.2*		*26.3-121*		*08/13/2015 15:54*	WG808662
(S) Nitrobenzene-d5	*82.0*		*21.9-129*		*08/13/2015 15:54*	WG808662
(S) 2-Fluorobiphenyl	*79.3*		*34.9-129*		*08/13/2015 15:54*	WG808662
(S) 2,4,6-Tribromophenol	*108*		*21.6-142*		*08/13/2015 15:54*	WG808662
(S) p-Terphenyl-d14	*83.9*		*21.5-128*		*08/13/2015 15:54*	WG808662

Total Solids by Method 2540 G-2011

Analyte	Result %	Qualifier	Dilution	Analysis date / time	Batch
Total Solids	89.0		1	08/13/2015 07:12	WG808615

Mercury by Method 7471A

Analyte	Result (dry) mg/kg	Qualifier	RDL (dry) mg/kg	Dilution	Analysis date / time	Batch
Mercury	0.0485		0.0225	1	08/13/2015 13:06	WG808666

Metals (ICP) by Method 6010B

Analyte	Result (dry) mg/kg	Qualifier	RDL (dry) mg/kg	Dilution	Analysis date / time	Batch
Arsenic	ND		2.25	1	08/13/2015 05:02	WG808635
Barium	33.0		0.562	1	08/13/2015 05:02	WG808635
Cadmium	ND		0.562	1	08/13/2015 05:02	WG808635
Chromium	7.82		1.12	1	08/13/2015 05:02	WG808635
Lead	8.04		0.562	1	08/13/2015 05:02	WG808635
Selenium	ND		2.25	1	08/13/2015 05:02	WG808635
Silver	ND		1.12	1	08/13/2015 05:02	WG808635

Volatile Organic Compounds (GC/MS) by Method 8260B

Analyte	Result (dry) mg/kg	Qualifier	RDL (dry) mg/kg	Dilution	Analysis date / time	Batch
Acetone	ND		1.40	25	08/13/2015 07:14	WG808625
Acrylonitrile	ND		0.281	25	08/13/2015 07:14	WG808625
Benzene	ND		0.0281	25	08/13/2015 07:14	WG808625
Bromobenzene	ND		0.0281	25	08/13/2015 07:14	WG808625
Bromodichloromethane	ND		0.0281	25	08/13/2015 07:14	WG808625
Bromoform	ND		0.0281	25	08/13/2015 07:14	WG808625
Bromomethane	ND		0.140	25	08/13/2015 07:14	WG808625
n-Butylbenzene	ND		0.0281	25	08/13/2015 07:14	WG808625
sec-Butylbenzene	ND		0.0281	25	08/13/2015 07:14	WG808625
tert-Butylbenzene	ND		0.0281	25	08/13/2015 07:14	WG808625
Carbon tetrachloride	ND		0.0281	25	08/13/2015 07:14	WG808625
Chlorobenzene	ND		0.0281	25	08/13/2015 07:14	WG808625
Chlorodibromomethane	ND		0.0281	25	08/13/2015 07:14	WG808625
Chloroethane	ND		0.140	25	08/13/2015 07:14	WG808625
2-Chloroethyl vinyl ether	ND		1.40	25	08/13/2015 07:14	WG808625
Chloroform	ND		0.140	25	08/13/2015 07:14	WG808625
Chloromethane	ND		0.0702	25	08/13/2015 07:14	WG808625
2-Chlorotoluene	ND		0.0281	25	08/13/2015 07:14	WG808625
4-Chlorotoluene	ND		0.0281	25	08/13/2015 07:14	WG808625
1,2-Dibromo-3-Chloropropane	ND		0.140	25	08/13/2015 07:14	WG808625
1,2-Dibromoethane	ND		0.0281	25	08/13/2015 07:14	WG808625
Dibromomethane	ND		0.0281	25	08/13/2015 07:14	WG808625
1,2-Dichlorobenzene	ND	J4	0.0281	25	08/13/2015 07:14	WG808625
1,3-Dichlorobenzene	ND		0.0281	25	08/13/2015 07:14	WG808625
1,4-Dichlorobenzene	ND	J4	0.0281	25	08/13/2015 07:14	WG808625
Dichlorodifluoromethane	ND		0.140	25	08/13/2015 07:14	WG808625
1,1-Dichloroethane	ND		0.0281	25	08/13/2015 07:14	WG808625
1,2-Dichloroethane	ND		0.0281	25	08/13/2015 07:14	WG808625
1,1-Dichloroethene	ND		0.0281	25	08/13/2015 07:14	WG808625
cis-1,2-Dichloroethene	ND		0.0281	25	08/13/2015 07:14	WG808625
trans-1,2-Dichloroethene	ND		0.0281	25	08/13/2015 07:14	WG808625
1,2-Dichloropropane	ND		0.0281	25	08/13/2015 07:14	WG808625
1,1-Dichloropropene	ND		0.0281	25	08/13/2015 07:14	WG808625

Volatile Organic Compounds (GC/MS) by Method 8260B

Analyte	Result (dry) mg/kg	Qualifier	RDL (dry) mg/kg	Dilution	Analysis date / time	Batch
1,3-Dichloropropane	ND	J4	0.0281	25	08/13/2015 07:14	WG808625
cis-1,3-Dichloropropene	ND		0.0281	25	08/13/2015 07:14	WG808625
trans-1,3-Dichloropropene	ND		0.0281	25	08/13/2015 07:14	WG808625
2,2-Dichloropropane	ND		0.0281	25	08/13/2015 07:14	WG808625
Dicyclopentadiene	0.316		0.0281	25	08/13/2015 07:14	WG808625
Di-isopropyl ether	ND		0.0281	25	08/13/2015 07:14	WG808625
Ethylbenzene	0.0347		0.0281	25	08/13/2015 07:14	WG808625
Hexachloro-1,3-butadiene	ND		0.0281	25	08/13/2015 07:14	WG808625
Isopropylbenzene	ND		0.0281	25	08/13/2015 07:14	WG808625
p-Isopropyltoluene	ND		0.0281	25	08/13/2015 07:14	WG808625
2-Butanone (MEK)	ND		0.281	25	08/13/2015 07:14	WG808625
Methylene Chloride	ND		0.140	25	08/13/2015 07:14	WG808625
4-Methyl-2-pentanone (MIBK)	ND		0.281	25	08/13/2015 07:14	WG808625
Methyl tert-butyl ether	ND		0.0281	25	08/13/2015 07:14	WG808625
Naphthalene	1.31		0.140	25	08/13/2015 07:14	WG808625
n-Propylbenzene	0.0979		0.0281	25	08/13/2015 07:14	WG808625
Styrene	ND		0.0281	25	08/13/2015 07:14	WG808625
1,1,1,2-Tetrachloroethane	ND		0.0281	25	08/13/2015 07:14	WG808625
1,1,2,2-Tetrachloroethane	ND		0.0281	25	08/13/2015 07:14	WG808625
1,1,2-Trichlorotrifluoroethane	ND		0.0281	25	08/13/2015 07:14	WG808625
Tetrachloroethene	ND		0.0281	25	08/13/2015 07:14	WG808625
Toluene	ND		0.140	25	08/13/2015 07:14	WG808625
1,2,3-Trichlorobenzene	ND		0.0281	25	08/13/2015 07:14	WG808625
1,2,4-Trichlorobenzene	ND		0.0281	25	08/13/2015 07:14	WG808625
1,1,1-Trichloroethane	ND		0.0281	25	08/13/2015 07:14	WG808625
1,1,2-Trichloroethane	ND		0.0281	25	08/13/2015 07:14	WG808625
Trichloroethene	ND		0.0281	25	08/13/2015 07:14	WG808625
Trichlorofluoromethane	ND		0.140	25	08/13/2015 07:14	WG808625
1,2,3-Trichloropropane	ND		0.0702	25	08/13/2015 07:14	WG808625
1,2,4-Trimethylbenzene	0.674		0.0281	25	08/13/2015 07:14	WG808625
1,2,3-Trimethylbenzene	0.345		0.0281	25	08/13/2015 07:14	WG808625
1,3,5-Trimethylbenzene	0.258		0.0281	25	08/13/2015 07:14	WG808625
Vinyl chloride	ND		0.0281	25	08/13/2015 07:14	WG808625
Xylenes, Total	0.114		0.0843	25	08/13/2015 07:14	WG808625
(S) Toluene-d8	*105*		*88.7-115*		*08/13/2015 07:14*	WG808625
(S) Dibromofluoromethane	*98.9*		*76.3-123*		*08/13/2015 07:14*	WG808625
(S) 4-Bromofluorobenzene	*98.8*		*69.7-129*		*08/13/2015 07:14*	WG808625

Sample Narrative:

8260B L782221-21 WG808625: Non-target compounds too high to run at a lower dilution.

Semi Volatile Organic Compounds (GC/MS) by Method 8270C

Analyte	Result (dry) mg/kg	Qualifier	RDL (dry) mg/kg	Dilution	Analysis date / time	Batch
Acenaphthene	ND		0.371	10	08/13/2015 16:26	WG808663
Acenaphthylene	ND		0.371	10	08/13/2015 16:26	WG808663
Anthracene	ND		0.371	10	08/13/2015 16:26	WG808663
Benzidine	ND		37.4	100	08/14/2015 13:11	WG808663
Benzo(a)anthracene	ND		3.71	100	08/14/2015 13:11	WG808663
Benzo(b)fluoranthene	ND		0.371	10	08/13/2015 16:26	WG808663
Benzo(k)fluoranthene	ND		0.371	10	08/13/2015 16:26	WG808663
Benzo(g,h,i)perylene	ND		0.371	10	08/13/2015 16:26	WG808663
Benzo(a)pyrene	ND		0.371	10	08/13/2015 16:26	WG808663
Bis(2-chlorethoxy)methane	ND		3.74	10	08/13/2015 16:26	WG808663
Bis(2-chloroethyl)ether	ND		3.74	10	08/13/2015 16:26	WG808663
Bis(2-chloroisopropyl)ether	ND		3.74	10	08/13/2015 16:26	WG808663

Semi Volatile Organic Compounds (GC/MS) by Method 8270C

Analyte	Result (dry) mg/kg	Qualifier	RDL (dry) mg/kg	Dilution	Analysis date / time	Batch
4-Bromophenyl-phenylether	ND		3.74	10	08/13/2015 16:26	WG808663
2-Chloronaphthalene	ND		0.371	10	08/13/2015 16:26	WG808663
4-Chlorophenyl-phenylether	ND		3.74	10	08/13/2015 16:26	WG808663
Chrysene	ND		3.71	100	08/14/2015 13:11	WG808663
Dibenz(a,h)anthracene	ND		0.371	10	08/13/2015 16:26	WG808663
3,3-Dichlorobenzidine	ND		37.4	100	08/14/2015 13:11	WG808663
2,4-Dinitrotoluene	ND		3.74	10	08/13/2015 16:26	WG808663
2,6-Dinitrotoluene	ND		3.74	10	08/13/2015 16:26	WG808663
Fluoranthene	ND		0.371	10	08/13/2015 16:26	WG808663
Fluorene	ND		0.371	10	08/13/2015 16:26	WG808663
Hexachlorobenzene	ND		3.74	10	08/13/2015 16:26	WG808663
Hexachloro-1,3-butadiene	ND		3.74	10	08/13/2015 16:26	WG808663
Hexachlorocyclopentadiene	ND		3.74	10	08/13/2015 16:26	WG808663
Hexachloroethane	ND		3.74	10	08/13/2015 16:26	WG808663
Indeno(1,2,3-cd)pyrene	ND		0.371	10	08/13/2015 16:26	WG808663
Isophorone	ND		3.74	10	08/13/2015 16:26	WG808663
Naphthalene	2.75		0.371	10	08/13/2015 16:26	WG808663
Nitrobenzene	ND		3.74	10	08/13/2015 16:26	WG808663
n-Nitrosodimethylamine	ND		3.74	10	08/13/2015 16:26	WG808663
n-Nitrosodiphenylamine	ND		3.74	10	08/13/2015 16:26	WG808663
n-Nitrosodi-n-propylamine	ND		3.74	10	08/13/2015 16:26	WG808663
Phenanthrene	ND		0.371	10	08/13/2015 16:26	WG808663
Benzylbutyl phthalate	ND		37.4	100	08/14/2015 13:11	WG808663
Bis(2-ethylhexyl)phthalate	ND		37.4	100	08/14/2015 13:11	WG808663
Di-n-butyl phthalate	ND		3.74	10	08/13/2015 16:26	WG808663
Diethyl phthalate	ND		3.74	10	08/13/2015 16:26	WG808663
Dimethyl phthalate	ND		3.74	10	08/13/2015 16:26	WG808663
Di-n-octyl phthalate	ND		37.4	100	08/14/2015 13:11	WG808663
Pyrene	ND		3.71	100	08/14/2015 13:11	WG808663
1,2,4-Trichlorobenzene	ND		3.74	10	08/13/2015 16:26	WG808663
4-Chloro-3-methylphenol	ND		3.74	10	08/13/2015 16:26	WG808663
2-Chlorophenol	ND		3.74	10	08/13/2015 16:26	WG808663
2,4-Dichlorophenol	ND		3.74	10	08/13/2015 16:26	WG808663
2,4-Dimethylphenol	ND		3.74	10	08/13/2015 16:26	WG808663
4,6-Dinitro-2-methylphenol	ND		3.74	10	08/13/2015 16:26	WG808663
2,4-Dinitrophenol	ND		3.74	10	08/13/2015 16:26	WG808663
2-Nitrophenol	ND		3.74	10	08/13/2015 16:26	WG808663
4-Nitrophenol	ND		3.74	10	08/13/2015 16:26	WG808663
Pentachlorophenol	ND		3.74	10	08/13/2015 16:26	WG808663
Phenol	ND		3.74	10	08/13/2015 16:26	WG808663
2,4,6-Trichlorophenol	ND		3.74	10	08/13/2015 16:26	WG808663
(S) 2-Fluorophenol	*87.9*		*21.1-116*		*08/13/2015 16:26*	WG808663
(S) Phenol-d5	*86.6*		*26.3-121*		*08/13/2015 16:26*	WG808663
(S) Nitrobenzene-d5	*112*		*21.9-129*		*08/13/2015 16:26*	WG808663
(S) 2-Fluorobiphenyl	*88.4*		*34.9-129*		*08/13/2015 16:26*	WG808663
(S) 2,4,6-Tribromophenol	*94.4*		*21.6-142*		*08/13/2015 16:26*	WG808663
(S) p-Terphenyl-d14	*14.5*	J7	*21.5-128*		*08/14/2015 13:11*	WG808663

Sample Narrative:

8270C L782221-21 WG808663: Cannot run at lower dilution due to viscosity of extract

8270C L782221-21 WG808663: Dilution due to matrix

Total Solids by Method 2540 G-2011

Analyte	Result %	Qualifier	Dilution	Analysis date / time	Batch
Total Solids	89.5		1	08/13/2015 07:12	WG808615

Volatile Organic Compounds (GC/MS) by Method 8260B

Analyte	Result (dry) mg/kg	Qualifier	RDL (dry) mg/kg	Dilution	Analysis date / time	Batch
Acetone	ND		1.40	25	08/14/2015 13:07	WG808839
Acrylonitrile	ND		0.279	25	08/14/2015 13:07	WG808839
Benzene	ND		0.0279	25	08/14/2015 13:07	WG808839
Bromobenzene	ND		0.0279	25	08/14/2015 13:07	WG808839
Bromodichloromethane	ND		0.0279	25	08/14/2015 13:07	WG808839
Bromoform	ND		0.0279	25	08/14/2015 13:07	WG808839
Bromomethane	ND		0.140	25	08/14/2015 13:07	WG808839
n-Butylbenzene	0.0346		0.0279	25	08/14/2015 13:07	WG808839
sec-Butylbenzene	ND		0.0279	25	08/14/2015 13:07	WG808839
tert-Butylbenzene	ND		0.0279	25	08/14/2015 13:07	WG808839
Carbon tetrachloride	ND		0.0279	25	08/14/2015 13:07	WG808839
Chlorobenzene	ND		0.0279	25	08/14/2015 13:07	WG808839
Chlorodibromomethane	ND		0.0279	25	08/14/2015 13:07	WG808839
Chloroethane	ND		0.140	25	08/14/2015 13:07	WG808839
2-Chloroethyl vinyl ether	ND		1.40	25	08/14/2015 13:07	WG808839
Chloroform	ND		0.140	25	08/14/2015 13:07	WG808839
Chloromethane	ND		0.0698	25	08/14/2015 13:07	WG808839
2-Chlorotoluene	ND		0.0279	25	08/14/2015 13:07	WG808839
4-Chlorotoluene	ND		0.0279	25	08/14/2015 13:07	WG808839
1,2-Dibromo-3-Chloropropane	ND		0.140	25	08/14/2015 13:07	WG808839
1,2-Dibromoethane	ND		0.0279	25	08/14/2015 13:07	WG808839
Dibromomethane	ND		0.0279	25	08/14/2015 13:07	WG808839
1,2-Dichlorobenzene	ND		0.0279	25	08/14/2015 13:07	WG808839
1,3-Dichlorobenzene	ND		0.0279	25	08/14/2015 13:07	WG808839
1,4-Dichlorobenzene	ND		0.0279	25	08/14/2015 13:07	WG808839
Dichlorodifluoromethane	ND		0.140	25	08/14/2015 13:07	WG808839
1,1-Dichloroethane	ND		0.0279	25	08/14/2015 13:07	WG808839
1,2-Dichloroethane	ND		0.0279	25	08/14/2015 13:07	WG808839
1,1-Dichloroethene	ND		0.0279	25	08/14/2015 13:07	WG808839
cis-1,2-Dichloroethene	ND		0.0279	25	08/14/2015 13:07	WG808839
trans-1,2-Dichloroethene	ND		0.0279	25	08/14/2015 13:07	WG808839
1,2-Dichloropropane	ND		0.0279	25	08/14/2015 13:07	WG808839
1,1-Dichloropropene	ND		0.0279	25	08/14/2015 13:07	WG808839
1,3-Dichloropropane	ND		0.0279	25	08/14/2015 13:07	WG808839
cis-1,3-Dichloropropene	ND		0.0279	25	08/14/2015 13:07	WG808839
trans-1,3-Dichloropropene	ND		0.0279	25	08/14/2015 13:07	WG808839
2,2-Dichloropropane	ND		0.0279	25	08/14/2015 13:07	WG808839
Dicyclopentadiene	0.958		0.0279	25	08/14/2015 13:07	WG808839
Di-isopropyl ether	ND		0.0279	25	08/14/2015 13:07	WG808839
Ethylbenzene	0.0310		0.0279	25	08/14/2015 13:07	WG808839
Hexachloro-1,3-butadiene	ND		0.0279	25	08/14/2015 13:07	WG808839
Isopropylbenzene	ND		0.0279	25	08/14/2015 13:07	WG808839
p-Isopropyltoluene	ND		0.0279	25	08/14/2015 13:07	WG808839
2-Butanone (MEK)	ND		0.279	25	08/14/2015 13:07	WG808839
Methylene Chloride	ND		0.140	25	08/14/2015 13:07	WG808839
4-Methyl-2-pentanone (MIBK)	ND		0.279	25	08/14/2015 13:07	WG808839
Methyl tert-butyl ether	ND		0.0279	25	08/14/2015 13:07	WG808839
Naphthalene	1.25		0.140	25	08/14/2015 13:07	WG808839
n-Propylbenzene	0.121		0.0279	25	08/14/2015 13:07	WG808839
Styrene	0.0749		0.0279	25	08/14/2015 13:07	WG808839

Volatile Organic Compounds (GC/MS) by Method 8260B

Analyte	Result (dry) mg/kg	Qualifier	RDL (dry) mg/kg	Dilution	Analysis date / time	Batch
1,1,1,2-Tetrachloroethane	ND		0.0279	25	08/14/2015 13:07	WG808839
1,1,2,2-Tetrachloroethane	ND		0.0279	25	08/14/2015 13:07	WG808839
1,1,2-Trichlorotrifluoroethane	ND		0.0279	25	08/14/2015 13:07	WG808839
Tetrachloroethene	ND		0.0279	25	08/14/2015 13:07	WG808839
Toluene	ND		0.140	25	08/14/2015 13:07	WG808839
1,2,3-Trichlorobenzene	ND		0.0279	25	08/14/2015 13:07	WG808839
1,2,4-Trichlorobenzene	ND		0.0279	25	08/14/2015 13:07	WG808839
1,1,1-Trichloroethane	ND		0.0279	25	08/14/2015 13:07	WG808839
1,1,2-Trichloroethane	ND		0.0279	25	08/14/2015 13:07	WG808839
Trichloroethene	ND		0.0279	25	08/14/2015 13:07	WG808839
Trichlorofluoromethane	ND		0.140	25	08/14/2015 13:07	WG808839
1,2,3-Trichloropropane	ND		0.0698	25	08/14/2015 13:07	WG808839
1,2,4-Trimethylbenzene	0.971		0.0279	25	08/14/2015 13:07	WG808839
1,2,3-Trimethylbenzene	0.403		0.0279	25	08/14/2015 13:07	WG808839
1,3,5-Trimethylbenzene	0.317		0.0279	25	08/14/2015 13:07	WG808839
Vinyl chloride	ND		0.0279	25	08/14/2015 13:07	WG808839
Xylenes, Total	0.329		0.0838	25	08/14/2015 13:07	WG808839
(S) Toluene-d8	*102*		*88.7-115*		*08/14/2015 13:07*	WG808839
(S) Dibromofluoromethane	*96.1*		*76.3-123*		*08/14/2015 13:07*	WG808839
(S) 4-Bromofluorobenzene	*108*		*69.7-129*		*08/14/2015 13:07*	WG808839

Sample Narrative:

8260B L782221-22 WG808839: Target compounds too high to run at a lower dilution.

Semi Volatile Organic Compounds (GC/MS) by Method 8270C

Analyte	Result (dry) mg/kg	Qualifier	RDL (dry) mg/kg	Dilution	Analysis date / time	Batch
Acenaphthene	ND		0.0369	1	08/13/2015 14:22	WG808663
Acenaphthylene	ND		0.0369	1	08/13/2015 14:22	WG808663
Anthracene	ND		0.0369	1	08/13/2015 14:22	WG808663
Benzidine	ND		0.372	1	08/13/2015 14:22	WG808663
Benzo(a)anthracene	ND		0.0369	1	08/13/2015 14:22	WG808663
Benzo(b)fluoranthene	ND		0.0369	1	08/13/2015 14:22	WG808663
Benzo(k)fluoranthene	ND		0.0369	1	08/13/2015 14:22	WG808663
Benzo(g,h,i)perylene	ND		0.0369	1	08/13/2015 14:22	WG808663
Benzo(a)pyrene	ND		0.0369	1	08/13/2015 14:22	WG808663
Bis(2-chlorethoxy)methane	ND		0.372	1	08/13/2015 14:22	WG808663
Bis(2-chloroethyl)ether	ND		0.372	1	08/13/2015 14:22	WG808663
Bis(2-chloroisopropyl)ether	ND		0.372	1	08/13/2015 14:22	WG808663
4-Bromophenyl-phenylether	ND		0.372	1	08/13/2015 14:22	WG808663
2-Chloronaphthalene	ND		0.0369	1	08/13/2015 14:22	WG808663
4-Chlorophenyl-phenylether	ND		0.372	1	08/13/2015 14:22	WG808663
Chrysene	ND		0.0369	1	08/13/2015 14:22	WG808663
Dibenz(a,h)anthracene	ND		0.0369	1	08/13/2015 14:22	WG808663
3,3-Dichlorobenzidine	ND		0.372	1	08/13/2015 14:22	WG808663
2,4-Dinitrotoluene	ND		0.372	1	08/13/2015 14:22	WG808663
2,6-Dinitrotoluene	ND		0.372	1	08/13/2015 14:22	WG808663
Fluoranthene	ND		0.0369	1	08/13/2015 14:22	WG808663
Fluorene	ND		0.0369	1	08/13/2015 14:22	WG808663
Hexachlorobenzene	ND		0.372	1	08/13/2015 14:22	WG808663
Hexachloro-1,3-butadiene	ND		0.372	1	08/13/2015 14:22	WG808663
Hexachlorocyclopentadiene	ND		0.372	1	08/13/2015 14:22	WG808663
Hexachloroethane	ND		0.372	1	08/13/2015 14:22	WG808663
Indeno(1,2,3-cd)pyrene	ND		0.0369	1	08/13/2015 14:22	WG808663
Isophorone	ND		0.372	1	08/13/2015 14:22	WG808663
Naphthalene	1.29		0.0369	1	08/13/2015 14:22	WG808663

Semi Volatile Organic Compounds (GC/MS) by Method 8270C

Analyte	Result (dry) mg/kg	Qualifier	RDL (dry) mg/kg	Dilution	Analysis date / time	Batch
Nitrobenzene	ND		0.372	1	08/13/2015 14:22	WG808663
n-Nitrosodimethylamine	ND		0.372	1	08/13/2015 14:22	WG808663
n-Nitrosodiphenylamine	ND		0.372	1	08/13/2015 14:22	WG808663
n-Nitrosodi-n-propylamine	ND		0.372	1	08/13/2015 14:22	WG808663
Phenanthrene	ND		0.0369	1	08/13/2015 14:22	WG808663
Benzylbutyl phthalate	ND		0.372	1	08/13/2015 14:22	WG808663
Bis(2-ethylhexyl)phthalate	ND		0.372	1	08/13/2015 14:22	WG808663
Di-n-butyl phthalate	ND		0.372	1	08/13/2015 14:22	WG808663
Diethyl phthalate	ND		0.372	1	08/13/2015 14:22	WG808663
Dimethyl phthalate	ND		0.372	1	08/13/2015 14:22	WG808663
Di-n-octyl phthalate	ND		0.372	1	08/13/2015 14:22	WG808663
Pyrene	ND		0.0369	1	08/13/2015 14:22	WG808663
1,2,4-Trichlorobenzene	ND		0.372	1	08/13/2015 14:22	WG808663
4-Chloro-3-methylphenol	ND		0.372	1	08/13/2015 14:22	WG808663
2-Chlorophenol	ND		0.372	1	08/13/2015 14:22	WG808663
2,4-Dichlorophenol	ND		0.372	1	08/13/2015 14:22	WG808663
2,4-Dimethylphenol	ND		0.372	1	08/13/2015 14:22	WG808663
4,6-Dinitro-2-methylphenol	ND		0.372	1	08/13/2015 14:22	WG808663
2,4-Dinitrophenol	ND		0.372	1	08/13/2015 14:22	WG808663
2-Nitrophenol	ND		0.372	1	08/13/2015 14:22	WG808663
4-Nitrophenol	ND		0.372	1	08/13/2015 14:22	WG808663
Pentachlorophenol	ND		0.372	1	08/13/2015 14:22	WG808663
Phenol	ND		0.372	1	08/13/2015 14:22	WG808663
2,4,6-Trichlorophenol	ND		0.372	1	08/13/2015 14:22	WG808663
(S) 2-Fluorophenol	*71.8*		*21.1-116*		*08/13/2015 14:22*	WG808663
(S) Phenol-d5	*76.6*		*26.3-121*		*08/13/2015 14:22*	WG808663
(S) Nitrobenzene-d5	*78.6*		*21.9-129*		*08/13/2015 14:22*	WG808663
(S) 2-Fluorobiphenyl	*77.9*		*34.9-129*		*08/13/2015 14:22*	WG808663
(S) 2,4,6-Tribromophenol	*85.0*		*21.6-142*		*08/13/2015 14:22*	WG808663
(S) p-Terphenyl-d14	*71.3*		*21.5-128*		*08/13/2015 14:22*	WG808663

Total Solids by Method 2540 G-2011

Analyte	Result %	Qualifier	Dilution	Analysis date / time	Batch
Total Solids	96.1		1	08/13/2015 07:12	WG808615

Mercury by Method 7471A

Analyte	Result (dry) mg/kg	Qualifier	RDL (dry) mg/kg	Dilution	Analysis date / time	Batch
Mercury	ND		0.0208	1	08/13/2015 13:09	WG808666

Metals (ICP) by Method 6010B

Analyte	Result (dry) mg/kg	Qualifier	RDL (dry) mg/kg	Dilution	Analysis date / time	Batch
Arsenic	3.39		2.08	1	08/13/2015 05:05	WG808635
Barium	43.9		0.520	1	08/13/2015 05:05	WG808635
Cadmium	ND		0.520	1	08/13/2015 05:05	WG808635
Chromium	9.10		1.04	1	08/13/2015 05:05	WG808635
Lead	6.39		0.520	1	08/13/2015 05:05	WG808635
Selenium	ND		2.08	1	08/13/2015 05:05	WG808635
Silver	ND		1.04	1	08/13/2015 05:05	WG808635

Volatile Organic Compounds (GC/MS) by Method 8260B

Analyte	Result (dry) mg/kg	Qualifier	RDL (dry) mg/kg	Dilution	Analysis date / time	Batch
Acetone	ND		0.260	5	08/13/2015 07:55	WG808625
Acrylonitrile	ND		0.0520	5	08/13/2015 07:55	WG808625
Benzene	ND		0.00520	5	08/13/2015 07:55	WG808625
Bromobenzene	ND		0.00520	5	08/13/2015 07:55	WG808625
Bromodichloromethane	ND		0.00520	5	08/13/2015 07:55	WG808625
Bromoform	ND		0.00520	5	08/13/2015 07:55	WG808625
Bromomethane	ND		0.0260	5	08/13/2015 07:55	WG808625
n-Butylbenzene	ND		0.00520	5	08/13/2015 07:55	WG808625
sec-Butylbenzene	ND		0.00520	5	08/13/2015 07:55	WG808625
tert-Butylbenzene	ND		0.00520	5	08/13/2015 07:55	WG808625
Carbon tetrachloride	ND		0.00520	5	08/13/2015 07:55	WG808625
Chlorobenzene	ND		0.00520	5	08/13/2015 07:55	WG808625
Chlorodibromomethane	ND		0.00520	5	08/13/2015 07:55	WG808625
Chloroethane	ND		0.0260	5	08/13/2015 07:55	WG808625
2-Chloroethyl vinyl ether	ND		0.260	5	08/13/2015 07:55	WG808625
Chloroform	ND		0.0260	5	08/13/2015 07:55	WG808625
Chloromethane	ND		0.0130	5	08/13/2015 07:55	WG808625
2-Chlorotoluene	ND		0.00520	5	08/13/2015 07:55	WG808625
4-Chlorotoluene	ND		0.00520	5	08/13/2015 07:55	WG808625
1,2-Dibromo-3-Chloropropane	ND		0.0260	5	08/13/2015 07:55	WG808625
1,2-Dibromoethane	ND		0.00520	5	08/13/2015 07:55	WG808625
Dibromomethane	ND		0.00520	5	08/13/2015 07:55	WG808625
1,2-Dichlorobenzene	ND	J4	0.00520	5	08/13/2015 07:55	WG808625
1,3-Dichlorobenzene	ND		0.00520	5	08/13/2015 07:55	WG808625
1,4-Dichlorobenzene	ND	J4	0.00520	5	08/13/2015 07:55	WG808625
Dichlorodifluoromethane	ND		0.0260	5	08/13/2015 07:55	WG808625
1,1-Dichloroethane	ND		0.00520	5	08/13/2015 07:55	WG808625
1,2-Dichloroethane	ND		0.00520	5	08/13/2015 07:55	WG808625
1,1-Dichloroethene	ND		0.00520	5	08/13/2015 07:55	WG808625
cis-1,2-Dichloroethene	ND		0.00520	5	08/13/2015 07:55	WG808625
trans-1,2-Dichloroethene	ND		0.00520	5	08/13/2015 07:55	WG808625
1,2-Dichloropropane	ND		0.00520	5	08/13/2015 07:55	WG808625
1,1-Dichloropropene	ND		0.00520	5	08/13/2015 07:55	WG808625

Volatile Organic Compounds (GC/MS) by Method 8260B

Analyte	Result (dry) mg/kg	Qualifier	RDL (dry) mg/kg	Dilution	Analysis date / time	Batch
1,3-Dichloropropane	ND	J4	0.00520	5	08/13/2015 07:55	WG808625
cis-1,3-Dichloropropene	ND		0.00520	5	08/13/2015 07:55	WG808625
trans-1,3-Dichloropropene	ND		0.00520	5	08/13/2015 07:55	WG808625
2,2-Dichloropropane	ND		0.00520	5	08/13/2015 07:55	WG808625
Dicyclopentadiene	0.0148		0.00520	5	08/13/2015 07:55	WG808625
Di-isopropyl ether	ND		0.00520	5	08/13/2015 07:55	WG808625
Ethylbenzene	ND		0.00520	5	08/13/2015 07:55	WG808625
Hexachloro-1,3-butadiene	ND		0.00520	5	08/13/2015 07:55	WG808625
Isopropylbenzene	ND		0.00520	5	08/13/2015 07:55	WG808625
p-Isopropyltoluene	ND		0.00520	5	08/13/2015 07:55	WG808625
2-Butanone (MEK)	ND		0.0520	5	08/13/2015 07:55	WG808625
Methylene Chloride	ND		0.0260	5	08/13/2015 07:55	WG808625
4-Methyl-2-pentanone (MIBK)	ND		0.0520	5	08/13/2015 07:55	WG808625
Methyl tert-butyl ether	ND		0.00520	5	08/13/2015 07:55	WG808625
Naphthalene	ND		0.0260	5	08/13/2015 07:55	WG808625
n-Propylbenzene	ND		0.00520	5	08/13/2015 07:55	WG808625
Styrene	ND		0.00520	5	08/13/2015 07:55	WG808625
1,1,1,2-Tetrachloroethane	ND		0.00520	5	08/13/2015 07:55	WG808625
1,1,2,2-Tetrachloroethane	ND		0.00520	5	08/13/2015 07:55	WG808625
1,1,2-Trichlorotrifluoroethane	ND		0.00520	5	08/13/2015 07:55	WG808625
Tetrachloroethene	ND		0.00520	5	08/13/2015 07:55	WG808625
Toluene	ND		0.0260	5	08/13/2015 07:55	WG808625
1,2,3-Trichlorobenzene	ND		0.00520	5	08/13/2015 07:55	WG808625
1,2,4-Trichlorobenzene	ND		0.00520	5	08/13/2015 07:55	WG808625
1,1,1-Trichloroethane	ND		0.00520	5	08/13/2015 07:55	WG808625
1,1,2-Trichloroethane	ND		0.00520	5	08/13/2015 07:55	WG808625
Trichloroethene	ND		0.00520	5	08/13/2015 07:55	WG808625
Trichlorofluoromethane	ND		0.0260	5	08/13/2015 07:55	WG808625
1,2,3-Trichloropropane	ND		0.0130	5	08/13/2015 07:55	WG808625
1,2,4-Trimethylbenzene	ND		0.00520	5	08/13/2015 07:55	WG808625
1,2,3-Trimethylbenzene	0.00730		0.00520	5	08/13/2015 07:55	WG808625
1,3,5-Trimethylbenzene	ND		0.00520	5	08/13/2015 07:55	WG808625
Vinyl chloride	ND		0.00520	5	08/13/2015 07:55	WG808625
Xylenes, Total	ND		0.0156	5	08/13/2015 07:55	WG808625
(S) Toluene-d8	*105*		*88.7-115*		*08/13/2015 07:55*	WG808625
(S) Dibromofluoromethane	*102*		*76.3-123*		*08/13/2015 07:55*	WG808625
(S) 4-Bromofluorobenzene	*94.2*		*69.7-129*		*08/13/2015 07:55*	WG808625

Semi Volatile Organic Compounds (GC/MS) by Method 8270C

Analyte	Result (dry) mg/kg	Qualifier	RDL (dry) mg/kg	Dilution	Analysis date / time	Batch
Acenaphthene	ND		0.0343	1	08/13/2015 16:01	WG808663
Acenaphthylene	ND		0.0343	1	08/13/2015 16:01	WG808663
Anthracene	ND		0.0343	1	08/13/2015 16:01	WG808663
Benzidine	ND		0.346	1	08/13/2015 16:01	WG808663
Benzo(a)anthracene	ND		0.0343	1	08/13/2015 16:01	WG808663
Benzo(b)fluoranthene	ND		0.0343	1	08/13/2015 16:01	WG808663
Benzo(k)fluoranthene	ND		0.0343	1	08/13/2015 16:01	WG808663
Benzo(g,h,i)perylene	ND		0.0343	1	08/13/2015 16:01	WG808663
Benzo(a)pyrene	ND		0.0343	1	08/13/2015 16:01	WG808663
Bis(2-chlorethoxy)methane	ND		0.346	1	08/13/2015 16:01	WG808663
Bis(2-chloroethyl)ether	ND		0.346	1	08/13/2015 16:01	WG808663
Bis(2-chloroisopropyl)ether	ND		0.346	1	08/13/2015 16:01	WG808663
4-Bromophenyl-phenylether	ND		0.346	1	08/13/2015 16:01	WG808663
2-Chloronaphthalene	ND		0.0343	1	08/13/2015 16:01	WG808663
4-Chlorophenyl-phenylether	ND		0.346	1	08/13/2015 16:01	WG808663

Semi Volatile Organic Compounds (GC/MS) by Method 8270C

Analyte	Result (dry) mg/kg	Qualifier	RDL (dry) mg/kg	Dilution	Analysis date / time	Batch
Chrysene	ND		0.0343	1	08/13/2015 16:01	WG808663
Dibenz(a,h)anthracene	ND		0.0343	1	08/13/2015 16:01	WG808663
3,3-Dichlorobenzidine	ND		0.346	1	08/13/2015 16:01	WG808663
2,4-Dinitrotoluene	ND		0.346	1	08/13/2015 16:01	WG808663
2,6-Dinitrotoluene	ND		0.346	1	08/13/2015 16:01	WG808663
Fluoranthene	ND		0.0343	1	08/13/2015 16:01	WG808663
Fluorene	ND		0.0343	1	08/13/2015 16:01	WG808663
Hexachlorobenzene	ND		0.346	1	08/13/2015 16:01	WG808663
Hexachloro-1,3-butadiene	ND		0.346	1	08/13/2015 16:01	WG808663
Hexachlorocyclopentadiene	ND		0.346	1	08/13/2015 16:01	WG808663
Hexachloroethane	ND		0.346	1	08/13/2015 16:01	WG808663
Indeno(1,2,3-cd)pyrene	ND		0.0343	1	08/13/2015 16:01	WG808663
Isophorone	ND		0.346	1	08/13/2015 16:01	WG808663
Naphthalene	0.0469		0.0343	1	08/13/2015 16:01	WG808663
Nitrobenzene	ND		0.346	1	08/13/2015 16:01	WG808663
n-Nitrosodimethylamine	ND		0.346	1	08/13/2015 16:01	WG808663
n-Nitrosodiphenylamine	ND		0.346	1	08/13/2015 16:01	WG808663
n-Nitrosodi-n-propylamine	ND		0.346	1	08/13/2015 16:01	WG808663
Phenanthrene	ND		0.0343	1	08/13/2015 16:01	WG808663
Benzylbutyl phthalate	ND		0.346	1	08/13/2015 16:01	WG808663
Bis(2-ethylhexyl)phthalate	1.20		0.346	1	08/13/2015 16:01	WG808663
Di-n-butyl phthalate	ND		0.346	1	08/13/2015 16:01	WG808663
Diethyl phthalate	ND		0.346	1	08/13/2015 16:01	WG808663
Dimethyl phthalate	ND		0.346	1	08/13/2015 16:01	WG808663
Di-n-octyl phthalate	ND		0.346	1	08/13/2015 16:01	WG808663
Pyrene	ND		0.0343	1	08/13/2015 16:01	WG808663
1,2,4-Trichlorobenzene	ND		0.346	1	08/13/2015 16:01	WG808663
4-Chloro-3-methylphenol	ND		0.346	1	08/13/2015 16:01	WG808663
2-Chlorophenol	ND		0.346	1	08/13/2015 16:01	WG808663
2,4-Dichlorophenol	ND		0.346	1	08/13/2015 16:01	WG808663
2,4-Dimethylphenol	ND		0.346	1	08/13/2015 16:01	WG808663
4,6-Dinitro-2-methylphenol	ND		0.346	1	08/13/2015 16:01	WG808663
2,4-Dinitrophenol	ND		0.346	1	08/13/2015 16:01	WG808663
2-Nitrophenol	ND		0.346	1	08/13/2015 16:01	WG808663
4-Nitrophenol	ND		0.346	1	08/13/2015 16:01	WG808663
Pentachlorophenol	ND		0.346	1	08/13/2015 16:01	WG808663
Phenol	ND		0.346	1	08/13/2015 16:01	WG808663
2,4,6-Trichlorophenol	ND		0.346	1	08/13/2015 16:01	WG808663
(S) 2-Fluorophenol	*74.0*		*21.1-116*		*08/13/2015 16:01*	WG808663
(S) Phenol-d5	*78.9*		*26.3-121*		*08/13/2015 16:01*	WG808663
(S) Nitrobenzene-d5	*85.9*		*21.9-129*		*08/13/2015 16:01*	WG808663
(S) 2-Fluorobiphenyl	*80.9*		*34.9-129*		*08/13/2015 16:01*	WG808663
(S) 2,4,6-Tribromophenol	*86.0*		*21.6-142*		*08/13/2015 16:01*	WG808663
(S) p-Terphenyl-d14	*70.0*		*21.5-128*		*08/13/2015 16:01*	WG808663

Total Solids by Method 2540 G-2011

Analyte	Result %	Qualifier	Dilution	Analysis date / time	Batch
Total Solids	89.3		1	08/13/2015 07:13	WG808615

Volatile Organic Compounds (GC/MS) by Method 8260B

Analyte	Result (dry) mg/kg	Qualifier	RDL (dry) mg/kg	Dilution	Analysis date / time	Batch
Acetone	ND		0.280	5	08/14/2015 03:08	WG809036
Acrylonitrile	ND		0.0560	5	08/14/2015 03:08	WG809036
Benzene	ND		0.00560	5	08/14/2015 03:08	WG809036
Bromobenzene	ND		0.00560	5	08/14/2015 03:08	WG809036
Bromodichloromethane	ND		0.00560	5	08/14/2015 03:08	WG809036
Bromoform	ND		0.00560	5	08/14/2015 03:08	WG809036
Bromomethane	ND		0.0280	5	08/14/2015 03:08	WG809036
n-Butylbenzene	ND		0.00560	5	08/14/2015 03:08	WG809036
sec-Butylbenzene	ND		0.00560	5	08/14/2015 03:08	WG809036
tert-Butylbenzene	ND		0.00560	5	08/14/2015 03:08	WG809036
Carbon tetrachloride	ND		0.00560	5	08/14/2015 03:08	WG809036
Chlorobenzene	ND		0.00560	5	08/14/2015 03:08	WG809036
Chlorodibromomethane	ND		0.00560	5	08/14/2015 03:08	WG809036
Chloroethane	ND		0.0280	5	08/14/2015 03:08	WG809036
2-Chloroethyl vinyl ether	ND		0.280	5	08/14/2015 03:08	WG809036
Chloroform	ND		0.0280	5	08/14/2015 03:08	WG809036
Chloromethane	ND		0.0140	5	08/14/2015 03:08	WG809036
2-Chlorotoluene	ND		0.00560	5	08/14/2015 03:08	WG809036
4-Chlorotoluene	ND		0.00560	5	08/14/2015 03:08	WG809036
1,2-Dibromo-3-Chloropropane	ND		0.0280	5	08/14/2015 03:08	WG809036
1,2-Dibromoethane	ND		0.00560	5	08/14/2015 03:08	WG809036
Dibromomethane	ND		0.00560	5	08/14/2015 03:08	WG809036
1,2-Dichlorobenzene	ND		0.00560	5	08/14/2015 03:08	WG809036
1,3-Dichlorobenzene	ND		0.00560	5	08/14/2015 03:08	WG809036
1,4-Dichlorobenzene	ND		0.00560	5	08/14/2015 03:08	WG809036
Dichlorodifluoromethane	ND		0.0280	5	08/14/2015 03:08	WG809036
1,1-Dichloroethane	ND		0.00560	5	08/14/2015 03:08	WG809036
1,2-Dichloroethane	ND		0.00560	5	08/14/2015 03:08	WG809036
1,1-Dichloroethene	ND		0.00560	5	08/14/2015 03:08	WG809036
cis-1,2-Dichloroethene	ND		0.00560	5	08/14/2015 03:08	WG809036
trans-1,2-Dichloroethene	ND		0.00560	5	08/14/2015 03:08	WG809036
1,2-Dichloropropane	ND		0.00560	5	08/14/2015 03:08	WG809036
1,1-Dichloropropene	ND		0.00560	5	08/14/2015 03:08	WG809036
1,3-Dichloropropane	ND		0.00560	5	08/14/2015 03:08	WG809036
cis-1,3-Dichloropropene	ND		0.00560	5	08/14/2015 03:08	WG809036
trans-1,3-Dichloropropene	ND		0.00560	5	08/14/2015 03:08	WG809036
2,2-Dichloropropane	ND		0.00560	5	08/14/2015 03:08	WG809036
Dicyclopentadiene	ND		0.00560	5	08/14/2015 03:08	WG809036
Di-isopropyl ether	ND		0.00560	5	08/14/2015 03:08	WG809036
Ethylbenzene	ND		0.00560	5	08/14/2015 03:08	WG809036
Hexachloro-1,3-butadiene	ND		0.00560	5	08/14/2015 03:08	WG809036
Isopropylbenzene	ND		0.00560	5	08/14/2015 03:08	WG809036
p-Isopropyltoluene	ND		0.00560	5	08/14/2015 03:08	WG809036
2-Butanone (MEK)	ND		0.0560	5	08/14/2015 03:08	WG809036
Methylene Chloride	ND		0.0280	5	08/14/2015 03:08	WG809036
4-Methyl-2-pentanone (MIBK)	ND		0.0560	5	08/14/2015 03:08	WG809036
Methyl tert-butyl ether	ND		0.00560	5	08/14/2015 03:08	WG809036
Naphthalene	ND		0.0280	5	08/14/2015 03:08	WG809036
n-Propylbenzene	ND		0.00560	5	08/14/2015 03:08	WG809036
Styrene	ND		0.00560	5	08/14/2015 03:08	WG809036

Volatile Organic Compounds (GC/MS) by Method 8260B

Analyte	Result (dry) mg/kg	Qualifier	RDL (dry) mg/kg	Dilution	Analysis date / time	Batch
1,1,1,2-Tetrachloroethane	ND		0.00560	5	08/14/2015 03:08	WG809036
1,1,2,2-Tetrachloroethane	ND		0.00560	5	08/14/2015 03:08	WG809036
1,1,2-Trichlorotrifluoroethane	ND		0.00560	5	08/14/2015 03:08	WG809036
Tetrachloroethene	ND		0.00560	5	08/14/2015 03:08	WG809036
Toluene	ND		0.0280	5	08/14/2015 03:08	WG809036
1,2,3-Trichlorobenzene	ND		0.00560	5	08/14/2015 03:08	WG809036
1,2,4-Trichlorobenzene	ND		0.00560	5	08/14/2015 03:08	WG809036
1,1,1-Trichloroethane	ND		0.00560	5	08/14/2015 03:08	WG809036
1,1,2-Trichloroethane	ND		0.00560	5	08/14/2015 03:08	WG809036
Trichloroethene	ND		0.00560	5	08/14/2015 03:08	WG809036
Trichlorofluoromethane	ND		0.0280	5	08/14/2015 03:08	WG809036
1,2,3-Trichloropropane	ND		0.0140	5	08/14/2015 03:08	WG809036
1,2,4-Trimethylbenzene	ND		0.00560	5	08/14/2015 03:08	WG809036
1,2,3-Trimethylbenzene	ND		0.00560	5	08/14/2015 03:08	WG809036
1,3,5-Trimethylbenzene	ND		0.00560	5	08/14/2015 03:08	WG809036
Vinyl chloride	ND		0.00560	5	08/14/2015 03:08	WG809036
Xylenes, Total	ND		0.0168	5	08/14/2015 03:08	WG809036
(S) Toluene-d8	*103*		*88.7-115*		*08/14/2015 03:08*	WG809036
(S) Dibromofluoromethane	*92.5*		*76.3-123*		*08/14/2015 03:08*	WG809036
(S) 4-Bromofluorobenzene	*103*		*69.7-129*		*08/14/2015 03:08*	WG809036

Semi Volatile Organic Compounds (GC/MS) by Method 8270C

Analyte	Result (dry) mg/kg	Qualifier	RDL (dry) mg/kg	Dilution	Analysis date / time	Batch
Acenaphthene	ND		0.0369	1	08/13/2015 14:46	WG808663
Acenaphthylene	ND		0.0369	1	08/13/2015 14:46	WG808663
Anthracene	ND		0.0369	1	08/13/2015 14:46	WG808663
Benzidine	ND		0.373	1	08/13/2015 14:46	WG808663
Benzo(a)anthracene	ND		0.0369	1	08/13/2015 14:46	WG808663
Benzo(b)fluoranthene	ND		0.0369	1	08/13/2015 14:46	WG808663
Benzo(k)fluoranthene	ND		0.0369	1	08/13/2015 14:46	WG808663
Benzo(g,h,i)perylene	ND		0.0369	1	08/13/2015 14:46	WG808663
Benzo(a)pyrene	ND		0.0369	1	08/13/2015 14:46	WG808663
Bis(2-chlorethoxy)methane	ND		0.373	1	08/13/2015 14:46	WG808663
Bis(2-chloroethyl)ether	ND		0.373	1	08/13/2015 14:46	WG808663
Bis(2-chloroisopropyl)ether	ND		0.373	1	08/13/2015 14:46	WG808663
4-Bromophenyl-phenylether	ND		0.373	1	08/13/2015 14:46	WG808663
2-Chloronaphthalene	ND		0.0369	1	08/13/2015 14:46	WG808663
4-Chlorophenyl-phenylether	ND		0.373	1	08/13/2015 14:46	WG808663
Chrysene	ND		0.0369	1	08/13/2015 14:46	WG808663
Dibenz(a,h)anthracene	ND		0.0369	1	08/13/2015 14:46	WG808663
3,3-Dichlorobenzidine	ND		0.373	1	08/13/2015 14:46	WG808663
2,4-Dinitrotoluene	ND		0.373	1	08/13/2015 14:46	WG808663
2,6-Dinitrotoluene	ND		0.373	1	08/13/2015 14:46	WG808663
Fluoranthene	ND		0.0369	1	08/13/2015 14:46	WG808663
Fluorene	ND		0.0369	1	08/13/2015 14:46	WG808663
Hexachlorobenzene	ND		0.373	1	08/13/2015 14:46	WG808663
Hexachloro-1,3-butadiene	ND		0.373	1	08/13/2015 14:46	WG808663
Hexachlorocyclopentadiene	ND		0.373	1	08/13/2015 14:46	WG808663
Hexachloroethane	ND		0.373	1	08/13/2015 14:46	WG808663
Indeno(1,2,3-cd)pyrene	ND		0.0369	1	08/13/2015 14:46	WG808663
Isophorone	ND		0.373	1	08/13/2015 14:46	WG808663
Naphthalene	ND		0.0369	1	08/13/2015 14:46	WG808663
Nitrobenzene	ND		0.373	1	08/13/2015 14:46	WG808663
n-Nitrosodimethylamine	ND		0.373	1	08/13/2015 14:46	WG808663
n-Nitrosodiphenylamine	ND		0.373	1	08/13/2015 14:46	WG808663

Semi Volatile Organic Compounds (GC/MS) by Method 8270C

Analyte	Result (dry) mg/kg	Qualifier	RDL (dry) mg/kg	Dilution	Analysis date / time	Batch
n-Nitrosodi-n-propylamine	ND		0.373	1	08/13/2015 14:46	WG808663
Phenanthrene	ND		0.0369	1	08/13/2015 14:46	WG808663
Benzylbutyl phthalate	ND		0.373	1	08/13/2015 14:46	WG808663
Bis(2-ethylhexyl)phthalate	ND		0.373	1	08/13/2015 14:46	WG808663
Di-n-butyl phthalate	ND		0.373	1	08/13/2015 14:46	WG808663
Diethyl phthalate	ND		0.373	1	08/13/2015 14:46	WG808663
Dimethyl phthalate	ND		0.373	1	08/13/2015 14:46	WG808663
Di-n-octyl phthalate	ND		0.373	1	08/13/2015 14:46	WG808663
Pyrene	ND		0.0369	1	08/13/2015 14:46	WG808663
1,2,4-Trichlorobenzene	ND		0.373	1	08/13/2015 14:46	WG808663
4-Chloro-3-methylphenol	ND		0.373	1	08/13/2015 14:46	WG808663
2-Chlorophenol	ND		0.373	1	08/13/2015 14:46	WG808663
2,4-Dichlorophenol	ND		0.373	1	08/13/2015 14:46	WG808663
2,4-Dimethylphenol	ND		0.373	1	08/13/2015 14:46	WG808663
4,6-Dinitro-2-methylphenol	ND		0.373	1	08/13/2015 14:46	WG808663
2,4-Dinitrophenol	ND		0.373	1	08/13/2015 14:46	WG808663
2-Nitrophenol	ND		0.373	1	08/13/2015 14:46	WG808663
4-Nitrophenol	ND		0.373	1	08/13/2015 14:46	WG808663
Pentachlorophenol	ND		0.373	1	08/13/2015 14:46	WG808663
Phenol	ND		0.373	1	08/13/2015 14:46	WG808663
2,4,6-Trichlorophenol	ND		0.373	1	08/13/2015 14:46	WG808663
(S) 2-Fluorophenol	*73.3*		*21.1-116*		*08/13/2015 14:46*	WG808663
(S) Phenol-d5	*77.4*		*26.3-121*		*08/13/2015 14:46*	WG808663
(S) Nitrobenzene-d5	*78.0*		*21.9-129*		*08/13/2015 14:46*	WG808663
(S) 2-Fluorobiphenyl	*80.2*		*34.9-129*		*08/13/2015 14:46*	WG808663
(S) 2,4,6-Tribromophenol	*85.9*		*21.6-142*		*08/13/2015 14:46*	WG808663
(S) p-Terphenyl-d14	*74.4*		*21.5-128*		*08/13/2015 14:46*	WG808663

Method Blank (MB)

(MB) 08/13/15 07:05

Analyte	MB Result %	MB Qualifier	MB RDL %
Total Solids	0.000100		

L782221-05 Original Sample (OS) • Duplicate (DUP)

(OS) 08/13/15 07:08 • (DUP) 08/13/15 07:08

Analyte	Original Result %	DUP Result %	Dilution	DUP RPD %	DUP Qualifier	DUP RPD Limits %
Total Solids	87.4	86.1	1	1.55		5

Laboratory Control Sample (LCS)

(LCS) 08/13/15 07:05

Analyte	Spike Amount %	LCS Result %	LCS Rec. %	Rec. Limits %	LCS Qualifier
Total Solids	50.0	50.0	100	85.0-115	

Method Blank (MB)

(MB) 08/13/15 07:16

Analyte	MB Result %	MB Qualifier	MB RDL %
Total Solids	0.00130		

L782221-11 Original Sample (OS) • Duplicate (DUP)

(OS) 08/13/15 07:18 • (DUP) 08/13/15 07:18

Analyte	Original Result %	DUP Result %	Dilution	DUP RPD %	DUP Qualifier	DUP RPD Limits %
Total Solids	85.5	86.3	1	0.993		5

Laboratory Control Sample (LCS)

(LCS) 08/13/15 07:16

Analyte	Spike Amount %	LCS Result %	LCS Rec. %	Rec. Limits %	LCS Qualifier
Total Solids	50.0	50.0	100	85.0-115	

Method Blank (MB)

(MB) 08/13/15 07:10

Analyte	MB Result	MB Qualifier	MB RDL
	%		%
Total Solids	0.00100		

L782221-18 Original Sample (OS) • Duplicate (DUP)

(OS) 08/13/15 07:11 • (DUP) 08/13/15 07:11

Analyte	Original Result	DUP Result	Dilution	DUP RPD	DUP Qualifier	DUP RPD Limits
	%	%		%		%
Total Solids	88.7	88.2	1	0.588		5

Laboratory Control Sample (LCS)

(LCS) 08/13/15 07:10

Analyte	Spike Amount	LCS Result	LCS Rec.	Rec. Limits	LCS Qualifier
	%	%	%	%	
Total Solids	50.0	50.0	100	85.0-115	

Method Blank (MB)

(MB) 08/13/15 11:46

Analyte	MB Result mg/kg	MB Qualifier	MB RDL mg/kg
Mercury	ND		0.0200

Laboratory Control Sample (LCS) • Laboratory Control Sample Duplicate (LCSD)

(LCS) 08/13/15 11:49 • (LCSD) 08/13/15 11:52

Analyte	Spike Amount mg/kg	LCS Result mg/kg	LCSD Result mg/kg	LCS Rec. %	LCSD Rec. %	Rec. Limits %	LCS Qualifier	LCSD Qualifier	RPD %	RPD Limits %
Mercury	0.300	0.284	0.287	95	96	80-120			1	20

L782157-05 Original Sample (OS) • Matrix Spike (MS) • Matrix Spike Duplicate (MSD)

(OS) 08/13/15 11:55 • (MS) 08/13/15 11:58 • (MSD) 08/13/15 12:01

Analyte	Spike Amount mg/kg	Original Result mg/kg	MS Result mg/kg	MSD Result mg/kg	MS Rec. %	MSD Rec. %	Dilution	Rec. Limits %	MS Qualifier	MSD Qualifier	RPD %	RPD Limits %
Mercury	0.300	0.0615	0.316	0.320	85	86	1	75-125			1	20

Method Blank (MB)

(MB) 08/13/15 03:47

Analyte	MB Result mg/kg	MB Qualifier	MB RDL mg/kg
Arsenic	ND		2.00
Barium	ND		0.500
Cadmium	ND		0.500
Chromium	ND		1.00
Lead	ND		0.500
Selenium	ND		2.00
Silver	ND		1.00

Laboratory Control Sample (LCS) • Laboratory Control Sample Duplicate (LCSD)

(LCS) 08/13/15 03:50 • (LCSD) 08/13/15 03:52

Analyte	Spike Amount mg/kg	LCS Result mg/kg	LCSD Result mg/kg	LCS Rec. %	LCSD Rec. %	Rec. Limits %	LCS Qualifier	LCSD Qualifier	RPD %	RPD Limits %
Arsenic	100	104	101	104	101	80-120			2	20
Barium	100	106	103	106	103	80-120			2	20
Cadmium	100	104	102	104	102	80-120			2	20
Chromium	100	100	98.2	100	98	80-120			2	20
Lead	100	107	104	107	104	80-120			3	20
Selenium	100	110	107	110	107	80-120			2	20
Silver	100	99.2	97.3	99	97	80-120			2	20

L782077-01 Original Sample (OS) • Matrix Spike (MS) • Matrix Spike Duplicate (MSD)

(OS) 08/13/15 03:55 • (MS) 08/13/15 04:09 • (MSD) 08/13/15 04:12

Analyte	Spike Amount mg/kg	Original Result mg/kg	MS Result mg/kg	MSD Result mg/kg	MS Rec. %	MSD Rec. %	Dilution	Rec. Limits %	MS Qualifier	MSD Qualifier	RPD %	RPD Limits %
Arsenic	100	1.27	92.4	96.1	91	95	1	75-125			4	20
Barium	100	84.3	179	177	94	93	1	75-125			1	20
Cadmium	100	0.125	97.9	101	98	100	1	75-125			3	20
Chromium	100	6.02	100	102	94	96	1	75-125			2	20
Lead	100	14.7	116	117	101	103	1	75-125			1	20
Selenium	100	ND	81.6	86.5	82	86	1	75-125			6	20
Silver	100	0.0316	95.3	97.5	95	97	1	75-125			2	20

Method Blank (MB)

(MB) 08/12/15 19:31

Analyte	MB Result mg/kg	MB Qualifier	MB RDL mg/kg
Acetone	ND		0.0500
Acrylonitrile	ND		0.0100
Benzene	ND		0.00100
Bromobenzene	ND		0.00100
Bromodichloromethane	ND		0.00100
Bromoform	ND		0.00100
Bromomethane	ND		0.00500
n-Butylbenzene	ND		0.00100
sec-Butylbenzene	ND		0.00100
tert-Butylbenzene	ND		0.00100
Carbon tetrachloride	ND		0.00100
Chlorobenzene	ND		0.00100
Chlorodibromomethane	ND		0.00100
Chloroethane	ND		0.00500
2-Chloroethyl vinyl ether	ND		0.0500
Chloroform	ND		0.00500
Chloromethane	ND		0.00250
2-Chlorotoluene	ND		0.00100
4-Chlorotoluene	ND		0.00100
1,2-Dibromo-3-Chloropropane	ND		0.00500
1,2-Dibromoethane	ND		0.00100
Dibromomethane	ND		0.00100
1,2-Dichlorobenzene	ND		0.00100
1,3-Dichlorobenzene	ND		0.00100
1,4-Dichlorobenzene	ND		0.00100
Dichlorodifluoromethane	ND		0.00500
1,1-Dichloroethane	ND		0.00100
1,2-Dichloroethane	ND		0.00100
1,1-Dichloroethene	ND		0.00100
cis-1,2-Dichloroethene	ND		0.00100
trans-1,2-Dichloroethene	ND		0.00100
1,2-Dichloropropane	ND		0.00100
1,1-Dichloropropene	ND		0.00100
1,3-Dichloropropane	ND		0.00100
cis-1,3-Dichloropropene	ND		0.00100
trans-1,3-Dichloropropene	ND		0.00100

Method Blank (MB)

(MB) 08/12/15 19:31

Analyte	MB Result mg/kg	MB Qualifier	MB RDL mg/kg
2,2-Dichloropropane	ND		0.00100
Dicyclopentadiene	ND		0.00100
Di-isopropyl ether	ND		0.00100
Ethylbenzene	ND		0.00100
Hexachloro-1,3-butadiene	ND		0.00100
Isopropylbenzene	ND		0.00100
p-Isopropyltoluene	ND		0.00100
2-Butanone (MEK)	ND		0.0100
Methylene Chloride	ND		0.00500
4-Methyl-2-pentanone (MIBK)	ND		0.0100
Methyl tert-butyl ether	ND		0.00100
Naphthalene	ND		0.00500
n-Propylbenzene	ND		0.00100
Styrene	ND		0.00100
1,1,1,2-Tetrachloroethane	ND		0.00100
1,1,2,2-Tetrachloroethane	ND		0.00100
Tetrachloroethene	ND		0.00100
Toluene	ND		0.00500
1,1,2-Trichlorotrifluoroethane	ND		0.00100
1,2,3-Trichlorobenzene	ND		0.00100
1,2,4-Trichlorobenzene	ND		0.00100
1,1,1-Trichloroethane	ND		0.00100
1,1,2-Trichloroethane	ND		0.00100
Trichloroethene	ND		0.00100
Trichlorofluoromethane	ND		0.00500
1,2,3-Trichloropropane	ND		0.00250
1,2,3-Trimethylbenzene	ND		0.00100
1,2,4-Trimethylbenzene	ND		0.00100
1,3,5-Trimethylbenzene	ND		0.00100
Vinyl chloride	ND		0.00100
Xylenes, Total	ND		0.00300
(S) Toluene-d8	*102*		*88.7-115*
(S) Dibromofluoromethane	*92.0*		*76.3-123*
(S) 4-Bromofluorobenzene	*102*		*69.7-129*

Laboratory Control Sample (LCS) • Laboratory Control Sample Duplicate (LCSD)

(LCS) 08/12/15 18:13 • (LCSD) 08/12/15 18:33

Analyte	Spike Amount mg/kg	LCS Result mg/kg	LCSD Result mg/kg	LCS Rec. %	LCSD Rec. %	Rec. Limits %	LCS Qualifier	LCSD Qualifier	RPD %	RPD Limits %
Acetone	0.125	0.155	0.159	124	128	25.3-178			3.09	22.9
Acrylonitrile	0.125	0.132	0.140	106	112	57.8-143			5.55	20
Benzene	0.0250	0.0231	0.0252	92.3	101	72.6-120			8.67	20
Bromobenzene	0.0250	0.0259	0.0278	103	111	80.3-115			7.16	20
Bromodichloromethane	0.0250	0.0242	0.0258	96.8	103	75.3-119			6.25	20
Bromoform	0.0250	0.0281	0.0298	113	119	69.1-135			5.86	20
Bromomethane	0.0250	0.0221	0.0236	88.4	94.3	23.0-191			6.52	20
n-Butylbenzene	0.0250	0.0266	0.0293	106	117	74.2-134			9.91	20
sec-Butylbenzene	0.0250	0.0276	0.0296	110	118	77.8-129			7.09	20
tert-Butylbenzene	0.0250	0.0273	0.0294	109	117	77.2-129			7.27	20
Carbon tetrachloride	0.0250	0.0242	0.0229	97.0	91.4	69.4-129			5.92	20
Chlorobenzene	0.0250	0.0264	0.0286	106	114	78.9-122			7.96	20
Chlorodibromomethane	0.0250	0.0266	0.0284	106	114	76.4-126			6.85	20
Chloroethane	0.0250	0.0233	0.0249	93.2	99.5	47.2-147			6.55	20
2-Chloroethyl vinyl ether	0.125	0.129	0.137	104	110	16.7-162			5.83	23.7
Chloroform	0.0250	0.0224	0.0242	89.6	96.8	73.3-122			7.68	20
Chloromethane	0.0250	0.0220	0.0234	88.1	93.7	53.1-135			6.20	20
2-Chlorotoluene	0.0250	0.0266	0.0287	107	115	74.6-127			7.54	20
4-Chlorotoluene	0.0250	0.0258	0.0281	103	112	79.5-123			8.68	20
1,2-Dibromo-3-Chloropropane	0.0250	0.0251	0.0266	101	106	64.9-131			5.58	20
1,2-Dibromoethane	0.0250	0.0259	0.0279	104	112	78.7-123			7.42	20
Dibromomethane	0.0250	0.0258	0.0274	103	110	78.5-117			5.84	20
1,2-Dichlorobenzene	0.0250	0.0250	0.0272	100	109	83.6-119			8.27	20
1,3-Dichlorobenzene	0.0250	0.0265	0.0288	106	115	75.9-129			8.55	20
1,4-Dichlorobenzene	0.0250	0.0249	0.0272	99.8	109	81.0-115			8.58	20
Dichlorodifluoromethane	0.0250	0.0204	0.0224	81.7	89.8	50.9-139			9.43	20
1,1-Dichloroethane	0.0250	0.0238	0.0256	95.4	102	71.7-125			7.08	20
1,2-Dichloroethane	0.0250	0.0226	0.0243	90.5	97.0	67.2-121			6.97	20
1,1-Dichloroethene	0.0250	0.0262	0.0281	105	112	60.6-133			7.03	20
cis-1,2-Dichloroethene	0.0250	0.0227	0.0245	90.7	97.9	76.1-121			7.64	20
trans-1,2-Dichloroethene	0.0250	0.0235	0.0257	94.2	103	70.7-124			8.70	20
1,2-Dichloropropane	0.0250	0.0259	0.0282	104	113	76.9-123			8.61	20
1,1-Dichloropropene	0.0250	0.0240	0.0256	95.8	103	71.2-126			6.82	20
1,3-Dichloropropane	0.0250	0.0250	0.0269	100	108	80.3-114			7.24	20
cis-1,3-Dichloropropene	0.0250	0.0253	0.0273	101	109	77.3-123			7.76	20
trans-1,3-Dichloropropene	0.0250	0.0260	0.0279	104	112	73.0-127			7.14	20

Laboratory Control Sample (LCS) • Laboratory Control Sample Duplicate (LCSD)

(LCS) 08/12/15 18:13 • (LCSD) 08/12/15 18:33

Analyte	Spike Amount mg/kg	LCS Result mg/kg	LCSD Result mg/kg	LCS Rec. %	LCSD Rec. %	Rec. Limits %	LCS Qualifier	LCSD Qualifier	RPD %	RPD Limits %
2,2-Dichloropropane	0.0250	0.0221	0.0251	88.5	100	61.9-132			12.6	20
Dicyclopentadiene	0.0250	0.0264	0.0283	105	113	73.1-126			7.04	20
Di-isopropyl ether	0.0250	0.0240	0.0256	95.9	102	67.2-131			6.42	20
Ethylbenzene	0.0250	0.0257	0.0278	103	111	78.6-124			7.86	20
Hexachloro-1,3-butadiene	0.0250	0.0277	0.0303	111	121	69.2-136			8.64	20
Isopropylbenzene	0.0250	0.0264	0.0287	106	115	79.4-126			8.22	20
p-Isopropyltoluene	0.0250	0.0278	0.0298	111	119	75.4-132			7.18	20
2-Butanone (MEK)	0.125	0.140	0.147	112	118	44.5-154			5.22	21.3
Methylene Chloride	0.0250	0.0236	0.0251	94.4	100	68.2-119			6.11	20
4-Methyl-2-pentanone (MIBK)	0.125	0.137	0.145	110	116	61.1-138			5.26	20
Methyl tert-butyl ether	0.0250	0.0229	0.0242	91.6	96.8	70.2-122			5.59	20
Naphthalene	0.0250	0.0252	0.0274	101	110	69.9-132			8.53	20
n-Propylbenzene	0.0250	0.0267	0.0288	107	115	80.2-124			7.28	20
Styrene	0.0250	0.0254	0.0276	102	110	79.4-124			8.24	20
1,1,1,2-Tetrachloroethane	0.0250	0.0256	0.0277	103	111	76.7-127			7.82	20
1,1,2,2-Tetrachloroethane	0.0250	0.0266	0.0284	107	114	78.8-124			6.47	20
Tetrachloroethene	0.0250	0.0266	0.0284	106	113	71.1-133			6.47	20
Toluene	0.0250	0.0249	0.0269	99.5	108	76.7-116			7.77	20
1,1,2-Trichlorotrifluoroethane	0.0250	0.0257	0.0272	103	109	62.6-138			5.92	20
1,2,3-Trichlorobenzene	0.0250	0.0272	0.0302	109	121	72.5-137			10.3	20
1,2,4-Trichlorobenzene	0.0250	0.0267	0.0297	107	119	74.0-137			10.5	20
1,1,1-Trichloroethane	0.0250	0.0229	0.0248	91.6	99.4	69.9-127			8.08	20
1,1,2-Trichloroethane	0.0250	0.0254	0.0272	102	109	81.9-119			6.85	20
Trichloroethene	0.0250	0.0255	0.0275	102	110	77.2-122			7.55	20
Trichlorofluoromethane	0.0250	0.0251	0.0270	100	108	51.5-151			7.23	20
1,2,3-Trichloropropane	0.0250	0.0278	0.0291	111	116	74.0-124			4.68	20
1,2,3-Trimethylbenzene	0.0250	0.0255	0.0277	102	111	79.4-118			8.15	20
1,2,4-Trimethylbenzene	0.0250	0.0264	0.0288	106	115	77.1-124			8.73	20
1,3,5-Trimethylbenzene	0.0250	0.0267	0.0288	107	115	79.0-125			7.62	20
Vinyl chloride	0.0250	0.0237	0.0253	94.7	101	58.4-134			6.78	20
Xylenes, Total	0.0750	0.0782	0.0839	104	112	78.1-123			7.10	20
(S) Toluene-d8				*102*	*102*	*88.7-115*				
(S) Dibromofluoromethane				*93.5*	*92.0*	*76.3-123*				
(S) 4-Bromofluorobenzene				*100*	*100*	*69.7-129*				

L782221-09 Original Sample (OS) • Matrix Spike (MS) • Matrix Spike Duplicate (MSD)

(OS) 08/13/15 02:34 • (MS) 08/13/15 03:13 • (MSD) 08/13/15 03:33

Analyte	Spike Amount mg/kg	Original Result mg/kg	MS Result mg/kg	MSD Result mg/kg	MS Rec. %	MSD Rec. %	Dilution	Rec. Limits %	MS Qualifier	MSD Qualifier	RPD %	RPD Limits %
Acetone	0.125	0.0271	0.836	0.771	129	119	5	10.0-130			8.16	31.5
Acrylonitrile	0.125	ND	0.745	0.693	119	111	5	39.3-152			7.31	27.2
Benzene	0.0250	ND	0.126	0.116	101	92.9	5	47.8-131			7.92	22.8
Bromobenzene	0.0250	ND	0.110	0.107	87.9	85.4	5	40.0-130			2.83	27.4
Bromodichloromethane	0.0250	ND	0.130	0.122	104	97.9	5	50.6-128			5.99	22.8
Bromoform	0.0250	ND	0.140	0.133	112	107	5	43.3-139			5.16	25.9
Bromomethane	0.0250	ND	0.118	0.107	94.5	85.5	5	5.00-189			9.94	26.7
n-Butylbenzene	0.0250	ND	0.0673	0.0680	53.8	54.4	5	23.6-146			1.05	39.2
sec-Butylbenzene	0.0250	0.00167	0.0840	0.0835	65.9	65.5	5	31.0-142			0.650	34.7
tert-Butylbenzene	0.0250	0.000817	0.0963	0.0954	76.4	75.7	5	36.9-142			0.900	31.7
Carbon tetrachloride	0.0250	ND	0.107	0.113	85.9	90.4	5	46.0-140			5.15	27.2
Chlorobenzene	0.0250	ND	0.122	0.115	98.0	92.2	5	44.1-134			6.11	25.7
Chlorodibromomethane	0.0250	ND	0.140	0.133	112	107	5	49.7-134			4.66	24
Chloroethane	0.0250	ND	0.125	0.116	100	92.5	5	5.00-164			7.79	28.4
2-Chloroethyl vinyl ether	0.125	ND	0.724	0.679	116	109	5	5.00-159			6.48	40
Chloroform	0.0250	ND	0.124	0.114	98.8	91.6	5	51.2-133			7.60	22.8
Chloromethane	0.0250	ND	0.123	0.113	98.8	90.4	5	31.4-141			8.87	24.6
2-Chlorotoluene	0.0250	ND	0.102	0.0983	81.7	78.7	5	36.1-137			3.76	28.9
4-Chlorotoluene	0.0250	ND	0.0926	0.0891	74.1	71.3	5	35.4-137			3.88	29.8
1,2-Dibromo-3-Chloropropane	0.0250	ND	0.125	0.125	99.7	100	5	40.4-138			0.310	30.8
1,2-Dibromoethane	0.0250	ND	0.136	0.129	108	103	5	50.2-133			5.22	23.6
Dibromomethane	0.0250	ND	0.137	0.130	110	104	5	52.4-128			5.88	23
1,2-Dichlorobenzene	0.0250	ND	0.0918	0.0938	73.4	75.0	5	34.6-139			2.12	29.9
1,3-Dichlorobenzene	0.0250	ND	0.0894	0.0875	71.5	70.0	5	28.4-142			2.06	31.2
1,4-Dichlorobenzene	0.0250	ND	0.0858	0.0854	68.6	68.3	5	35.0-133			0.450	31.1
Dichlorodifluoromethane	0.0250	ND	0.112	0.101	89.9	80.7	5	31.2-144			10.8	30.2
1,1-Dichloroethane	0.0250	ND	0.132	0.122	106	97.9	5	49.1-136			7.71	22.9
1,2-Dichloroethane	0.0250	ND	0.123	0.114	98.3	91.6	5	47.1-129			7.13	22.7
1,1-Dichloroethene	0.0250	ND	0.131	0.119	105	95.3	5	36.1-142			9.64	25.6
cis-1,2-Dichloroethene	0.0250	ND	0.124	0.113	99.0	90.5	5	50.6-133			8.91	23
trans-1,2-Dichloroethene	0.0250	ND	0.121	0.111	96.9	88.7	5	43.8-135			8.83	24.8
1,2-Dichloropropane	0.0250	ND	0.145	0.137	116	109	5	50.3-134			5.82	22.7
1,1-Dichloropropene	0.0250	ND	0.112	0.102	89.4	81.6	5	43.0-137			9.20	26.4
1,3-Dichloropropane	0.0250	ND	0.137	0.130	110	104	5	51.4-127			5.54	23.1
cis-1,3-Dichloropropene	0.0250	ND	0.130	0.124	104	99.3	5	48.4-134			4.79	23.6
trans-1,3-Dichloropropene	0.0250	ND	0.132	0.126	106	101	5	46.6-135			4.55	25.3

L782221-09 Original Sample (OS) • Matrix Spike (MS) • Matrix Spike Duplicate (MSD)

(OS) 08/13/15 02:34 • (MS) 08/13/15 03:13 • (MSD) 08/13/15 03:33

Analyte	Spike Amount mg/kg	Original Result mg/kg	MS Result mg/kg	MSD Result mg/kg	MS Rec. %	MSD Rec. %	Dilution	Rec. Limits %	MS Qualifier	MSD Qualifier	RPD %	RPD Limits %
2,2-Dichloropropane	0.0250	ND	0.128	0.113	102	90.5	5	45.2-141			12.3	26.6
Dicyclopentadiene	0.0250	0.437	0.631	0.469	155	25.3	5	41.3-141	J5	J3 J6	29.5	28.9
Di-isopropyl ether	0.0250	ND	0.140	0.129	112	103	5	46.7-140			8.44	23.5
Ethylbenzene	0.0250	0.0330	0.159	0.152	101	95.1	5	44.8-135			4.69	26.9
Hexachloro-1,3-butadiene	0.0250	ND	0.0453	0.0469	36.2	37.6	5	10.0-149			3.68	40
Isopropylbenzene	0.0250	0.0117	0.122	0.115	88.0	82.8	5	41.9-139			5.47	29.3
p-Isopropyltoluene	0.0250	ND	0.0890	0.0864	71.2	69.2	5	27.3-146			2.92	35.1
2-Butanone (MEK)	0.125	0.00334	0.777	0.717	124	114	5	23.9-170			8.02	28.3
Methylene Chloride	0.0250	0.0138	0.152	0.145	111	105	5	46.7-125			4.74	22.2
4-Methyl-2-pentanone (MIBK)	0.125	ND	0.766	0.725	123	116	5	42.4-146			5.53	26.7
Methyl tert-butyl ether	0.0250	ND	0.136	0.124	108	99.0	5	50.4-131			9.03	24.8
Naphthalene	0.0250	0.137	0.335	0.298	158	129	5	18.4-145	J5		11.5	34
n-Propylbenzene	0.0250	0.0229	0.125	0.118	82.0	76.3	5	35.2-139			5.86	31.9
Styrene	0.0250	0.000354	0.112	0.108	89.5	85.8	5	39.7-137			4.24	28.2
1,1,1,2-Tetrachloroethane	0.0250	ND	0.133	0.126	106	101	5	48.8-136			5.42	25.5
1,1,2,2-Tetrachloroethane	0.0250	ND	0.139	0.131	111	105	5	45.7-140			5.85	26.4
Tetrachloroethene	0.0250	ND	0.106	0.0987	84.5	78.9	5	37.7-140			6.80	29.2
Toluene	0.0250	0.00236	0.126	0.118	99.2	92.4	5	47.8-127			6.94	24.3
1,1,2-Trichlorotrifluoroethane	0.0250	ND	0.112	0.105	89.5	83.6	5	35.7-146			6.81	28.8
1,2,3-Trichlorobenzene	0.0250	ND	0.0615	0.0672	49.2	53.8	5	10.0-150			8.93	38.5
1,2,4-Trichlorobenzene	0.0250	ND	0.0607	0.0638	48.5	51.0	5	10.0-153			5.05	39.3
1,1,1-Trichloroethane	0.0250	ND	0.124	0.112	99.3	90.0	5	49.0-138			9.85	25.3
1,1,2-Trichloroethane	0.0250	ND	0.141	0.132	113	105	5	52.3-132			7.03	23.4
Trichloroethene	0.0250	ND	0.123	0.115	98.6	92.2	5	48.0-132			6.72	24.8
Trichlorofluoromethane	0.0250	ND	0.127	0.116	102	92.4	5	12.8-169			9.67	29.7
1,2,3-Trichloropropane	0.0250	ND	0.142	0.135	114	108	5	44.4-138			4.73	26.3
1,2,3-Trimethylbenzene	0.0250	0.0420	0.161	0.151	95.3	86.8	5	41.0-133			6.85	27.6
1,2,4-Trimethylbenzene	0.0250	0.0558	0.174	0.154	94.8	78.4	5	32.9-139			12.5	30.6
1,3,5-Trimethylbenzene	0.0250	0.0173	0.120	0.110	82.2	74.0	5	37.1-138			8.98	30.6
Vinyl chloride	0.0250	ND	0.125	0.114	100	91.1	5	32.0-146			9.47	26.3
Xylenes, Total	0.0750	0.0269	0.374	0.348	92.6	85.7	5	42.7-135			7.23	26.6
(S) Toluene-d8					*103*	*103*		*88.7-115*				
(S) Dibromofluoromethane					*93.3*	*92.7*		*76.3-123*				
(S) 4-Bromofluorobenzene					*101*	*100*		*69.7-129*				

Method Blank (MB)

(MB) 08/12/15 23:51

Analyte	MB Result mg/kg	MB Qualifier	MB RDL mg/kg
Acetone	ND		0.0500
Acrylonitrile	ND		0.0100
Benzene	ND		0.00100
Bromobenzene	ND		0.00100
Bromodichloromethane	ND		0.00100
Bromoform	ND		0.00100
Bromomethane	ND		0.00500
n-Butylbenzene	ND		0.00100
sec-Butylbenzene	ND		0.00100
tert-Butylbenzene	ND		0.00100
Carbon tetrachloride	ND		0.00100
Chlorobenzene	ND		0.00100
Chlorodibromomethane	ND		0.00100
Chloroethane	ND		0.00500
2-Chloroethyl vinyl ether	ND		0.0500
Chloroform	ND		0.00500
Chloromethane	ND		0.00250
2-Chlorotoluene	ND		0.00100
4-Chlorotoluene	ND		0.00100
1,2-Dibromo-3-Chloropropane	ND		0.00500
1,2-Dibromoethane	ND		0.00100
Dibromomethane	ND		0.00100
1,2-Dichlorobenzene	ND		0.00100
1,3-Dichlorobenzene	ND		0.00100
1,4-Dichlorobenzene	ND		0.00100
Dichlorodifluoromethane	ND		0.00500
1,1-Dichloroethane	ND		0.00100
1,2-Dichloroethane	ND		0.00100
1,1-Dichloroethene	ND		0.00100
cis-1,2-Dichloroethene	ND		0.00100
trans-1,2-Dichloroethene	ND		0.00100
1,2-Dichloropropane	ND		0.00100
1,1-Dichloropropene	ND		0.00100
1,3-Dichloropropane	ND		0.00100
cis-1,3-Dichloropropene	ND		0.00100
trans-1,3-Dichloropropene	ND		0.00100

Method Blank (MB)

(MB) 08/12/15 23:51

Analyte	MB Result mg/kg	MB Qualifier	MB RDL mg/kg
2,2-Dichloropropane	ND		0.00100
Dicyclopentadiene	ND		0.00100
Di-isopropyl ether	ND		0.00100
Ethylbenzene	ND		0.00100
Hexachloro-1,3-butadiene	ND		0.00100
Isopropylbenzene	ND		0.00100
p-Isopropyltoluene	ND		0.00100
2-Butanone (MEK)	ND		0.0100
Methylene Chloride	ND		0.00500
4-Methyl-2-pentanone (MIBK)	ND		0.0100
Methyl tert-butyl ether	ND		0.00100
Naphthalene	ND		0.00500
n-Propylbenzene	ND		0.00100
Styrene	ND		0.00100
1,1,1,2-Tetrachloroethane	ND		0.00100
1,1,2,2-Tetrachloroethane	ND		0.00100
Tetrachloroethene	ND		0.00100
Toluene	ND		0.00500
1,1,2-Trichlorotrifluoroethane	ND		0.00100
1,2,3-Trichlorobenzene	ND		0.00100
1,2,4-Trichlorobenzene	ND		0.00100
1,1,1-Trichloroethane	ND		0.00100
1,1,2-Trichloroethane	ND		0.00100
Trichloroethene	ND		0.00100
Trichlorofluoromethane	ND		0.00500
1,2,3-Trichloropropane	ND		0.00250
1,2,3-Trimethylbenzene	ND		0.00100
1,2,4-Trimethylbenzene	ND		0.00100
1,3,5-Trimethylbenzene	ND		0.00100
Vinyl chloride	ND		0.00100
Xylenes, Total	ND		0.00300
(S) Toluene-d8	*105*		*88.7-115*
(S) Dibromofluoromethane	*101*		*76.3-123*
(S) 4-Bromofluorobenzene	*91.6*		*69.7-129*

Laboratory Control Sample (LCS) • Laboratory Control Sample Duplicate (LCSD)

(LCS) 08/12/15 22:49 • (LCSD) 08/13/15 00:12

Analyte	Spike Amount mg/kg	LCS Result mg/kg	LCSD Result mg/kg	LCS Rec. %	LCSD Rec. %	Rec. Limits %	LCS Qualifier	LCSD Qualifier	RPD %	RPD Limits %
Acetone	0.125	0.139	0.134	112	107	25.3-178			4.16	22.9
Acrylonitrile	0.125	0.139	0.136	111	109	57.8-143			1.60	20
Benzene	0.0250	0.0284	0.0269	114	108	72.6-120			5.49	20
Bromobenzene	0.0250	0.0264	0.0244	106	97.5	80.3-115			8.05	20
Bromodichloromethane	0.0250	0.0266	0.0257	106	103	75.3-119			3.36	20
Bromoform	0.0250	0.0287	0.0270	115	108	69.1-135			5.99	20
Bromomethane	0.0250	0.0244	0.0232	97.4	93.0	23.0-191			4.69	20
n-Butylbenzene	0.0250	0.0281	0.0269	112	107	74.2-134			4.58	20
sec-Butylbenzene	0.0250	0.0281	0.0256	112	102	77.8-129			9.37	20
tert-Butylbenzene	0.0250	0.0278	0.0251	111	100	77.2-129			10.0	20
Carbon tetrachloride	0.0250	0.0284	0.0268	114	107	69.4-129			5.79	20
Chlorobenzene	0.0250	0.0286	0.0264	114	106	78.9-122			7.89	20
Chlorodibromomethane	0.0250	0.0299	0.0282	120	113	76.4-126			5.92	20
Chloroethane	0.0250	0.0200	0.0193	79.8	77.0	47.2-147			3.53	20
2-Chloroethyl vinyl ether	0.125	0.147	0.147	118	118	16.7-162			0.300	23.7
Chloroform	0.0250	0.0272	0.0262	109	105	73.3-122			3.53	20
Chloromethane	0.0250	0.0241	0.0230	96.2	92.0	53.1-135			4.52	20
2-Chlorotoluene	0.0250	0.0260	0.0240	104	96.0	74.6-127			8.05	20
4-Chlorotoluene	0.0250	0.0276	0.0254	110	101	79.5-123			8.36	20
1,2-Dibromo-3-Chloropropane	0.0250	0.0280	0.0270	112	108	64.9-131			3.45	20
1,2-Dibromoethane	0.0250	0.0300	0.0277	120	111	78.7-123			8.23	20
Dibromomethane	0.0250	0.0284	0.0273	114	109	78.5-117			4.06	20
1,2-Dichlorobenzene	0.0250	0.0305	0.0287	122	115	83.6-119	J4		6.03	20
1,3-Dichlorobenzene	0.0250	0.0302	0.0274	121	110	75.9-129			9.43	20
1,4-Dichlorobenzene	0.0250	0.0295	0.0287	118	115	81.0-115	J4		2.73	20
Dichlorodifluoromethane	0.0250	0.0230	0.0215	91.8	85.9	50.9-139			6.67	20
1,1-Dichloroethane	0.0250	0.0272	0.0264	109	106	71.7-125			2.73	20
1,2-Dichloroethane	0.0250	0.0285	0.0271	114	108	67.2-121			5.10	20
1,1-Dichloroethene	0.0250	0.0265	0.0248	106	99.1	60.6-133			6.50	20
cis-1,2-Dichloroethene	0.0250	0.0282	0.0265	113	106	76.1-121			6.09	20
trans-1,2-Dichloroethene	0.0250	0.0274	0.0251	110	101	70.7-124			8.66	20
1,2-Dichloropropane	0.0250	0.0285	0.0281	114	112	76.9-123			1.57	20
1,1-Dichloropropene	0.0250	0.0279	0.0263	111	105	71.2-126			5.85	20
1,3-Dichloropropane	0.0250	0.0288	0.0273	115	109	80.3-114	J4		5.59	20
cis-1,3-Dichloropropene	0.0250	0.0293	0.0287	117	115	77.3-123			1.84	20
trans-1,3-Dichloropropene	0.0250	0.0299	0.0290	120	116	73.0-127			3.13	20

Laboratory Control Sample (LCS) • Laboratory Control Sample Duplicate (LCSD)

(LCS) 08/12/15 22:49 • (LCSD) 08/13/15 00:12

Analyte	Spike Amount mg/kg	LCS Result mg/kg	LCSD Result mg/kg	LCS Rec. %	LCSD Rec. %	Rec. Limits %	LCS Qualifier	LCSD Qualifier	RPD %	RPD Limits %
2,2-Dichloropropane	0.0250	0.0226	0.0221	90.4	88.4	61.9-132			2.17	20
Dicyclopentadiene	0.0250	0.0250	0.0226	99.9	90.3	73.1-126			10.0	20
Di-isopropyl ether	0.0250	0.0282	0.0270	113	108	67.2-131			4.27	20
Ethylbenzene	0.0250	0.0285	0.0259	114	104	78.6-124			9.62	20
Hexachloro-1,3-butadiene	0.0250	0.0304	0.0267	121	107	69.2-136			12.8	20
Isopropylbenzene	0.0250	0.0281	0.0259	112	104	79.4-126			8.17	20
p-Isopropyltoluene	0.0250	0.0289	0.0260	115	104	75.4-132			10.3	20
2-Butanone (MEK)	0.125	0.155	0.153	124	122	44.5-154			1.59	21.3
Methylene Chloride	0.0250	0.0284	0.0254	114	101	68.2-119			11.2	20
4-Methyl-2-pentanone (MIBK)	0.125	0.133	0.131	106	105	61.1-138			1.35	20
Methyl tert-butyl ether	0.0250	0.0260	0.0246	104	98.2	70.2-122			5.77	20
Naphthalene	0.0250	0.0294	0.0262	118	105	69.9-132			11.3	20
n-Propylbenzene	0.0250	0.0268	0.0250	107	100	80.2-124			6.93	20
Styrene	0.0250	0.0281	0.0262	113	105	79.4-124			7.19	20
1,1,1,2-Tetrachloroethane	0.0250	0.0287	0.0271	115	108	76.7-127			5.95	20
1,1,2,2-Tetrachloroethane	0.0250	0.0269	0.0253	108	101	78.8-124			6.15	20
Tetrachloroethene	0.0250	0.0305	0.0280	122	112	71.1-133			8.63	20
Toluene	0.0250	0.0286	0.0273	114	109	76.7-116			4.56	20
1,1,2-Trichlorotrifluoroethane	0.0250	0.0266	0.0249	106	99.7	62.6-138			6.42	20
1,2,3-Trichlorobenzene	0.0250	0.0307	0.0265	123	106	72.5-137			14.7	20
1,2,4-Trichlorobenzene	0.0250	0.0305	0.0270	122	108	74.0-137			12.0	20
1,1,1-Trichloroethane	0.0250	0.0262	0.0254	105	102	69.9-127			3.04	20
1,1,2-Trichloroethane	0.0250	0.0284	0.0266	114	107	81.9-119			6.43	20
Trichloroethene	0.0250	0.0293	0.0277	117	111	77.2-122			5.84	20
Trichlorofluoromethane	0.0250	0.0271	0.0258	108	103	51.5-151			4.81	20
1,2,3-Trichloropropane	0.0250	0.0274	0.0255	110	102	74.0-124			7.05	20
1,2,3-Trimethylbenzene	0.0250	0.0268	0.0253	107	101	79.4-118			5.80	20
1,2,4-Trimethylbenzene	0.0250	0.0275	0.0246	110	98.5	77.1-124			10.8	20
1,3,5-Trimethylbenzene	0.0250	0.0267	0.0240	107	96.1	79.0-125			10.6	20
Vinyl chloride	0.0250	0.0241	0.0232	96.5	93.0	58.4-134			3.79	20
Xylenes, Total	0.0750	0.0837	0.0767	112	102	78.1-123			8.61	20
(S) Toluene-d8				*104*	*105*	*88.7-115*				
(S) Dibromofluoromethane				*101*	*99.6*	*76.3-123*				
(S) 4-Bromofluorobenzene				*94.4*	*89.8*	*69.7-129*				

L781801-11 Original Sample (OS) • Matrix Spike (MS) • Matrix Spike Duplicate (MSD)

(OS) 08/13/15 01:44 • (MS) 08/13/15 00:42 • (MSD) 08/13/15 01:02

Analyte	Spike Amount mg/kg	Original Result mg/kg	MS Result mg/kg	MSD Result mg/kg	MS Rec. %	MSD Rec. %	Dilution	Rec. Limits %	MS Qualifier	MSD Qualifier	RPD %	RPD Limits %
Acetone	0.125	0.00822	0.611	0.584	96.5	92.1	5	10.0-130			4.60	31.5
Acrylonitrile	0.125	ND	0.622	0.610	99.6	97.7	5	39.3-152			1.93	27.2
Benzene	0.0250	ND	0.122	0.115	97.7	92.0	5	47.8-131			6.02	22.8
Bromobenzene	0.0250	ND	0.0988	0.0862	79.1	68.9	5	40.0-130			13.7	27.4
Bromodichloromethane	0.0250	ND	0.114	0.111	91.4	88.4	5	50.6-128			3.34	22.8
Bromoform	0.0250	ND	0.115	0.110	92.3	87.8	5	43.3-139			4.97	25.9
Bromomethane	0.0250	ND	0.116	0.106	92.4	85.1	5	5.00-189			8.22	26.7
n-Butylbenzene	0.0250	ND	0.0890	0.0614	71.2	49.1	5	23.6-146			36.7	39.2
sec-Butylbenzene	0.0250	ND	0.0946	0.0662	75.7	53.0	5	31.0-142		J3	35.3	34.7
tert-Butylbenzene	0.0250	ND	0.0982	0.0735	78.6	58.8	5	36.9-142			28.8	31.7
Carbon tetrachloride	0.0250	ND	0.121	0.108	97.1	86.2	5	46.0-140			11.9	27.2
Chlorobenzene	0.0250	ND	0.113	0.102	90.1	81.7	5	44.1-134			9.83	25.7
Chlorodibromomethane	0.0250	ND	0.123	0.119	98.5	95.4	5	49.7-134			3.20	24
Chloroethane	0.0250	ND	0.0962	0.0889	76.9	71.1	5	5.00-164			7.86	28.4
2-Chloroethyl vinyl ether	0.125	ND	0.638	0.639	102	102	5	5.00-159			0.180	40
Chloroform	0.0250	ND	0.120	0.114	96.0	91.2	5	51.2-133			5.10	22.8
Chloromethane	0.0250	ND	0.110	0.105	87.8	83.6	5	31.4-141			4.92	24.6
2-Chlorotoluene	0.0250	ND	0.0938	0.0764	75.0	61.1	5	36.1-137			20.4	28.9
4-Chlorotoluene	0.0250	ND	0.0982	0.0822	78.6	65.8	5	35.4-137			17.8	29.8
1,2-Dibromo-3-Chloropropane	0.0250	ND	0.111	0.106	88.6	85.1	5	40.4-138			4.11	30.8
1,2-Dibromoethane	0.0250	ND	0.125	0.120	99.7	96.2	5	50.2-133			3.65	23.6
Dibromomethane	0.0250	ND	0.118	0.122	94.4	97.5	5	52.4-128			3.16	23
1,2-Dichlorobenzene	0.0250	ND	0.109	0.0931	87.0	74.4	5	34.6-139			15.6	29.9
1,3-Dichlorobenzene	0.0250	ND	0.104	0.0843	83.2	67.5	5	28.4-142			20.9	31.2
1,4-Dichlorobenzene	0.0250	ND	0.103	0.0887	82.6	71.0	5	35.0-133			15.1	31.1
Dichlorodifluoromethane	0.0250	ND	0.103	0.0947	82.4	75.8	5	31.2-144			8.40	30.2
1,1-Dichloroethane	0.0250	ND	0.122	0.118	97.6	94.1	5	49.1-136			3.71	22.9
1,2-Dichloroethane	0.0250	ND	0.123	0.118	98.6	94.8	5	47.1-129			3.95	22.7
1,1-Dichloroethene	0.0250	ND	0.113	0.107	90.1	85.6	5	36.1-142			5.21	25.6
cis-1,2-Dichloroethene	0.0250	ND	0.123	0.117	98.1	93.5	5	50.6-133			4.77	23
trans-1,2-Dichloroethene	0.0250	ND	0.120	0.110	95.9	88.4	5	43.8-135			8.11	24.8
1,2-Dichloropropane	0.0250	ND	0.127	0.124	101	98.8	5	50.3-134			2.47	22.7
1,1-Dichloropropene	0.0250	ND	0.117	0.105	93.3	84.3	5	43.0-137			10.2	26.4
1,3-Dichloropropane	0.0250	ND	0.122	0.118	97.3	94.6	5	51.4-127			2.82	23.1
cis-1,3-Dichloropropene	0.0250	ND	0.123	0.122	98.4	97.5	5	48.4-134			0.920	23.6
trans-1,3-Dichloropropene	0.0250	ND	0.124	0.120	99.5	96.2	5	46.6-135			3.41	25.3

L781801-11 Original Sample (OS) • Matrix Spike (MS) • Matrix Spike Duplicate (MSD)

(OS) 08/13/15 01:44 • (MS) 08/13/15 00:42 • (MSD) 08/13/15 01:02

Analyte	Spike Amount mg/kg	Original Result mg/kg	MS Result mg/kg	MSD Result mg/kg	MS Rec. %	MSD Rec. %	Dilution	Rec. Limits %	MS Qualifier	MSD Qualifier	RPD %	RPD Limits %
2,2-Dichloropropane	0.0250	ND	0.101	0.0967	80.5	77.4	5	45.2-141			3.93	26.6
Dicyclopentadiene	0.0250	ND	0.0878	0.0647	70.3	51.8	5	41.3-141		J3	30.3	28.9
Di-isopropyl ether	0.0250	ND	0.125	0.121	99.7	96.8	5	46.7-140			3.04	23.5
Ethylbenzene	0.0250	ND	0.110	0.0930	87.7	74.4	5	44.8-135			16.5	26.9
Hexachloro-1,3-butadiene	0.0250	ND	0.0819	0.0482	65.5	38.5	5	10.0-149		J3	51.9	40
Isopropylbenzene	0.0250	ND	0.103	0.0836	82.5	66.9	5	41.9-139			21.0	29.3
p-Isopropyltoluene	0.0250	ND	0.0947	0.0673	75.8	53.8	5	27.3-146			33.9	35.1
2-Butanone (MEK)	0.125	ND	0.704	0.688	113	110	5	23.9-170			2.41	28.3
Methylene Chloride	0.0250	0.00152	0.118	0.111	92.9	87.7	5	46.7-125			5.64	22.2
4-Methyl-2-pentanone (MIBK)	0.125	0.00237	0.577	0.583	92.0	92.9	5	42.4-146			1.00	26.7
Methyl tert-butyl ether	0.0250	ND	0.113	0.112	90.6	89.5	5	50.4-131			1.18	24.8
Naphthalene	0.0250	0.00227	0.0984	0.0854	76.9	66.5	5	18.4-145			14.1	34
n-Propylbenzene	0.0250	ND	0.0962	0.0730	76.9	58.4	5	35.2-139			27.4	31.9
Styrene	0.0250	ND	0.108	0.0975	86.2	78.0	5	39.7-137			9.96	28.2
1,1,1,2-Tetrachloroethane	0.0250	ND	0.118	0.107	94.4	86.0	5	48.8-136			9.32	25.5
1,1,2,2-Tetrachloroethane	0.0250	ND	0.111	0.105	88.9	84.2	5	45.7-140			5.45	26.4
Tetrachloroethene	0.0250	ND	0.113	0.0954	90.4	76.4	5	37.7-140			16.9	29.2
Toluene	0.0250	ND	0.116	0.110	92.6	87.7	5	47.8-127			5.48	24.3
1,1,2-Trichlorotrifluoroethane	0.0250	ND	0.110	0.0902	88.1	72.2	5	35.7-146			19.9	28.8
1,2,3-Trichlorobenzene	0.0250	ND	0.0873	0.0690	69.8	55.2	5	10.0-150			23.5	38.5
1,2,4-Trichlorobenzene	0.0250	ND	0.0870	0.0665	69.6	53.2	5	10.0-153			26.7	39.3
1,1,1-Trichloroethane	0.0250	ND	0.117	0.105	93.4	83.7	5	49.0-138			10.9	25.3
1,1,2-Trichloroethane	0.0250	ND	0.117	0.115	93.5	91.6	5	52.3-132			2.01	23.4
Trichloroethene	0.0250	ND	0.118	0.111	94.6	89.2	5	48.0-132			5.93	24.8
Trichlorofluoromethane	0.0250	ND	0.123	0.113	98.4	90.4	5	12.8-169			8.48	29.7
1,2,3-Trichloropropane	0.0250	ND	0.116	0.107	93.0	85.3	5	44.4-138			8.73	26.3
1,2,3-Trimethylbenzene	0.0250	0.000473	0.0966	0.0817	76.9	65.0	5	41.0-133			16.7	27.6
1,2,4-Trimethylbenzene	0.0250	0.000446	0.0956	0.0760	76.1	60.4	5	32.9-139			22.9	30.6
1,3,5-Trimethylbenzene	0.0250	ND	0.0940	0.0737	75.2	59.0	5	37.1-138			24.2	30.6
Vinyl chloride	0.0250	ND	0.110	0.104	88.0	82.8	5	32.0-146			6.12	26.3
Xylenes, Total	0.0750	0.000700	0.317	0.274	84.5	72.8	5	42.7-135			14.8	26.6
(S) Toluene-d8					*104*	*107*		*88.7-115*				
(S) Dibromofluoromethane					*103*	*101*		*76.3-123*				
(S) 4-Bromofluorobenzene					*94.2*	*93.7*		*69.7-129*				

Method Blank (MB)

(MB) 08/14/15 09:28

Analyte	MB Result mg/kg	MB Qualifier	MB RDL mg/kg
Acetone	ND		0.0500
Acrylonitrile	ND		0.0100
Benzene	ND		0.00100
Bromobenzene	ND		0.00100
Bromodichloromethane	ND		0.00100
Bromoform	ND		0.00100
Bromomethane	ND		0.00500
n-Butylbenzene	ND		0.00100
sec-Butylbenzene	ND		0.00100
tert-Butylbenzene	ND		0.00100
Carbon tetrachloride	ND		0.00100
Chlorobenzene	ND		0.00100
Chlorodibromomethane	ND		0.00100
Chloroethane	ND		0.00500
2-Chloroethyl vinyl ether	ND		0.0500
Chloroform	ND		0.00500
Chloromethane	ND		0.00250
2-Chlorotoluene	ND		0.00100
4-Chlorotoluene	ND		0.00100
1,2-Dibromo-3-Chloropropane	ND		0.00500
1,2-Dibromoethane	ND		0.00100
Dibromomethane	ND		0.00100
1,2-Dichlorobenzene	ND		0.00100
1,3-Dichlorobenzene	ND		0.00100
1,4-Dichlorobenzene	ND		0.00100
Dichlorodifluoromethane	ND		0.00500
1,1-Dichloroethane	ND		0.00100
1,2-Dichloroethane	ND		0.00100
1,1-Dichloroethene	ND		0.00100
cis-1,2-Dichloroethene	ND		0.00100
trans-1,2-Dichloroethene	ND		0.00100
1,2-Dichloropropane	ND		0.00100
1,1-Dichloropropene	ND		0.00100
1,3-Dichloropropane	ND		0.00100
cis-1,3-Dichloropropene	ND		0.00100
trans-1,3-Dichloropropene	ND		0.00100

Method Blank (MB)

(MB) 08/14/15 09:28

Analyte	MB Result mg/kg	MB Qualifier	MB RDL mg/kg
2,2-Dichloropropane	ND		0.00100
Dicyclopentadiene	ND		0.00100
Di-isopropyl ether	ND		0.00100
Ethylbenzene	ND		0.00100
Hexachloro-1,3-butadiene	ND		0.00100
Isopropylbenzene	ND		0.00100
p-Isopropyltoluene	ND		0.00100
2-Butanone (MEK)	ND		0.0100
Methylene Chloride	ND		0.00500
4-Methyl-2-pentanone (MIBK)	ND		0.0100
Methyl tert-butyl ether	ND		0.00100
Naphthalene	ND		0.00500
n-Propylbenzene	ND		0.00100
Styrene	ND		0.00100
1,1,1,2-Tetrachloroethane	ND		0.00100
1,1,2,2-Tetrachloroethane	ND		0.00100
Tetrachloroethene	ND		0.00100
Toluene	ND		0.00500
1,1,2-Trichlorotrifluoroethane	ND		0.00100
1,2,3-Trichlorobenzene	ND		0.00100
1,2,4-Trichlorobenzene	ND		0.00100
1,1,1-Trichloroethane	ND		0.00100
1,1,2-Trichloroethane	ND		0.00100
Trichloroethene	ND		0.00100
Trichlorofluoromethane	ND		0.00500
1,2,3-Trichloropropane	ND		0.00250
1,2,3-Trimethylbenzene	ND		0.00100
1,2,4-Trimethylbenzene	ND		0.00100
1,3,5-Trimethylbenzene	ND		0.00100
Vinyl chloride	ND		0.00100
Xylenes, Total	ND		0.00300
(S) Toluene-d8	*100*		*88.7-115*
(S) Dibromofluoromethane	*99.3*		*76.3-123*
(S) 4-Bromofluorobenzene	*97.4*		*69.7-129*

Laboratory Control Sample (LCS) • Laboratory Control Sample Duplicate (LCSD)

(LCS) 08/14/15 07:52 • (LCSD) 08/14/15 08:11

Analyte	Spike Amount mg/kg	LCS Result mg/kg	LCSD Result mg/kg	LCS Rec. %	LCSD Rec. %	Rec. Limits %	LCS Qualifier	LCSD Qualifier	RPD %	RPD Limits %
Acetone	0.125	0.123	0.121	98.8	96.7	25.3-178			2.07	22.9
Acrylonitrile	0.125	0.128	0.128	103	102	57.8-143			0.450	20
Benzene	0.0250	0.0229	0.0240	91.6	96.1	72.6-120			4.71	20
Bromobenzene	0.0250	0.0230	0.0245	92.1	97.8	80.3-115			6.03	20
Bromodichloromethane	0.0250	0.0232	0.0243	92.6	97.1	75.3-119			4.71	20
Bromoform	0.0250	0.0233	0.0239	93.2	95.8	69.1-135			2.70	20
Bromomethane	0.0250	0.0226	0.0231	90.2	92.4	23.0-191			2.38	20
n-Butylbenzene	0.0250	0.0229	0.0251	91.6	100	74.2-134			9.20	20
sec-Butylbenzene	0.0250	0.0218	0.0238	87.1	95.0	77.8-129			8.72	20
tert-Butylbenzene	0.0250	0.0219	0.0235	87.4	94.1	77.2-129			7.34	20
Carbon tetrachloride	0.0250	0.0219	0.0239	87.8	95.5	69.4-129			8.44	20
Chlorobenzene	0.0250	0.0233	0.0245	93.1	98.1	78.9-122			5.30	20
Chlorodibromomethane	0.0250	0.0243	0.0252	97.2	101	76.4-126			3.53	20
Chloroethane	0.0250	0.0237	0.0250	94.6	99.8	47.2-147			5.36	20
2-Chloroethyl vinyl ether	0.125	0.116	0.124	93.1	98.9	16.7-162			6.07	23.7
Chloroform	0.0250	0.0235	0.0243	94.0	97.0	73.3-122			3.16	20
Chloromethane	0.0250	0.0192	0.0201	76.9	80.5	53.1-135			4.60	20
2-Chlorotoluene	0.0250	0.0227	0.0246	90.9	98.3	74.6-127			7.84	20
4-Chlorotoluene	0.0250	0.0220	0.0239	87.9	95.8	79.5-123			8.55	20
1,2-Dibromo-3-Chloropropane	0.0250	0.0242	0.0247	96.8	99.0	64.9-131			2.20	20
1,2-Dibromoethane	0.0250	0.0238	0.0244	95.2	97.8	78.7-123			2.69	20
Dibromomethane	0.0250	0.0244	0.0248	97.6	99.3	78.5-117			1.81	20
1,2-Dichlorobenzene	0.0250	0.0249	0.0264	99.7	106	83.6-119			5.88	20
1,3-Dichlorobenzene	0.0250	0.0229	0.0242	91.6	96.9	75.9-129			5.62	20
1,4-Dichlorobenzene	0.0250	0.0233	0.0247	93.0	98.8	81.0-115			6.01	20
Dichlorodifluoromethane	0.0250	0.0243	0.0259	97.2	104	50.9-139			6.33	20
1,1-Dichloroethane	0.0250	0.0239	0.0252	95.5	101	71.7-125			5.30	20
1,2-Dichloroethane	0.0250	0.0248	0.0250	99.0	99.8	67.2-121			0.770	20
1,1-Dichloroethene	0.0250	0.0243	0.0260	97.1	104	60.6-133			7.01	20
cis-1,2-Dichloroethene	0.0250	0.0239	0.0249	95.5	99.7	76.1-121			4.34	20
trans-1,2-Dichloroethene	0.0250	0.0233	0.0247	93.3	98.9	70.7-124			5.88	20
1,2-Dichloropropane	0.0250	0.0236	0.0248	94.5	99.2	76.9-123			4.79	20
1,1-Dichloropropene	0.0250	0.0228	0.0244	91.3	97.5	71.2-126			6.57	20
1,3-Dichloropropane	0.0250	0.0238	0.0239	95.1	95.6	80.3-114			0.490	20
cis-1,3-Dichloropropene	0.0250	0.0245	0.0254	98.0	102	77.3-123			3.56	20
trans-1,3-Dichloropropene	0.0250	0.0249	0.0263	99.4	105	73.0-127			5.72	20

Laboratory Control Sample (LCS) • Laboratory Control Sample Duplicate (LCSD)

(LCS) 08/14/15 07:52 • (LCSD) 08/14/15 08:11

Analyte	Spike Amount mg/kg	LCS Result mg/kg	LCSD Result mg/kg	LCS Rec. %	LCSD Rec. %	Rec. Limits %	LCS Qualifier	LCSD Qualifier	RPD %	RPD Limits %
2,2-Dichloropropane	0.0250	0.0228	0.0243	91.2	97.3	61.9-132			6.49	20
Dicyclopentadiene	0.0250	0.0226	0.0243	90.4	97.3	73.1-126			7.31	20
Di-isopropyl ether	0.0250	0.0247	0.0251	98.9	100	67.2-131			1.54	20
Ethylbenzene	0.0250	0.0226	0.0245	90.4	98.0	78.6-124			8.04	20
Hexachloro-1,3-butadiene	0.0250	0.0211	0.0230	84.5	91.9	69.2-136			8.38	20
Isopropylbenzene	0.0250	0.0214	0.0233	85.5	93.2	79.4-126			8.66	20
p-Isopropyltoluene	0.0250	0.0218	0.0239	87.1	95.5	75.4-132			9.26	20
2-Butanone (MEK)	0.125	0.115	0.115	92.3	92.3	44.5-154			0.000	21.3
Methylene Chloride	0.0250	0.0248	0.0255	99.2	102	68.2-119			2.71	20
4-Methyl-2-pentanone (MIBK)	0.125	0.115	0.117	92.4	93.3	61.1-138			1.01	20
Methyl tert-butyl ether	0.0250	0.0257	0.0258	103	103	70.2-122			0.470	20
Naphthalene	0.0250	0.0235	0.0246	93.9	98.5	69.9-132			4.71	20
n-Propylbenzene	0.0250	0.0222	0.0242	88.7	96.8	80.2-124			8.84	20
Styrene	0.0250	0.0239	0.0255	95.5	102	79.4-124			6.64	20
1,1,1,2-Tetrachloroethane	0.0250	0.0229	0.0246	91.8	98.5	76.7-127			7.03	20
1,1,2,2-Tetrachloroethane	0.0250	0.0249	0.0254	99.5	101	78.8-124			1.88	20
Tetrachloroethene	0.0250	0.0229	0.0248	91.6	99.1	71.1-133			7.84	20
Toluene	0.0250	0.0225	0.0241	90.0	96.5	76.7-116			6.96	20
1,1,2-Trichlorotrifluoroethane	0.0250	0.0243	0.0263	97.2	105	62.6-138			7.85	20
1,2,3-Trichlorobenzene	0.0250	0.0239	0.0246	95.5	98.3	72.5-137			2.93	20
1,2,4-Trichlorobenzene	0.0250	0.0244	0.0254	97.8	102	74.0-137			3.77	20
1,1,1-Trichloroethane	0.0250	0.0225	0.0244	90.1	97.7	69.9-127			8.08	20
1,1,2-Trichloroethane	0.0250	0.0260	0.0261	104	104	81.9-119			0.460	20
Trichloroethene	0.0250	0.0232	0.0247	92.9	98.8	77.2-122			6.21	20
Trichlorofluoromethane	0.0250	0.0222	0.0235	88.7	94.0	51.5-151			5.73	20
1,2,3-Trichloropropane	0.0250	0.0242	0.0239	96.9	95.8	74.0-124			1.15	20
1,2,3-Trimethylbenzene	0.0250	0.0230	0.0244	91.9	97.7	79.4-118			6.17	20
1,2,4-Trimethylbenzene	0.0250	0.0213	0.0230	85.1	91.8	77.1-124			7.68	20
1,3,5-Trimethylbenzene	0.0250	0.0217	0.0235	86.8	94.2	79.0-125			8.17	20
Vinyl chloride	0.0250	0.0232	0.0254	92.7	102	58.4-134			9.34	20
Xylenes, Total	0.0750	0.0679	0.0731	90.5	97.4	78.1-123			7.38	20
(S) Toluene-d8				*102*	*102*	*88.7-115*				
(S) Dibromofluoromethane				*101*	*98.9*	*76.3-123*				
(S) 4-Bromofluorobenzene				*97.1*	*98.6*	*69.7-129*				

L782357-04 Original Sample (OS) • Matrix Spike (MS) • Matrix Spike Duplicate (MSD)

(OS) 08/14/15 09:54 • (MS) 08/14/15 12:09 • (MSD) 08/14/15 12:28

Analyte	Spike Amount mg/kg	Original Result mg/kg	MS Result mg/kg	MSD Result mg/kg	MS Rec. %	MSD Rec. %	Dilution	Rec. Limits %	MS Qualifier	MSD Qualifier	RPD %	RPD Limits %
Acetone	0.125	0.00884	0.255	0.262	39.4	40.5	5	10.0-130			2.65	31.5
Acrylonitrile	0.125	ND	0.564	0.568	90.3	90.8	5	39.3-152			0.570	27.2
Benzene	0.0250	ND	0.115	0.115	92.2	91.7	5	47.8-131			0.560	22.8
Bromobenzene	0.0250	0.000936	0.113	0.113	89.6	89.6	5	40.0-130			0.0200	27.4
Bromodichloromethane	0.0250	ND	0.115	0.113	92.0	90.6	5	50.6-128			1.61	22.8
Bromoform	0.0250	ND	0.113	0.112	90.7	89.7	5	43.3-139			1.16	25.9
Bromomethane	0.0250	0.00161	0.109	0.114	85.8	89.9	5	5.00-189			4.63	26.7
n-Butylbenzene	0.0250	ND	0.108	0.109	86.5	87.1	5	23.6-146			0.620	39.2
sec-Butylbenzene	0.0250	ND	0.106	0.109	85.1	87.0	5	31.0-142			2.23	34.7
tert-Butylbenzene	0.0250	ND	0.110	0.112	88.4	89.2	5	36.9-142			0.960	31.7
Carbon tetrachloride	0.0250	ND	0.114	0.112	91.1	89.7	5	46.0-140			1.53	27.2
Chlorobenzene	0.0250	ND	0.117	0.115	93.4	92.4	5	44.1-134			1.07	25.7
Chlorodibromomethane	0.0250	ND	0.117	0.118	93.9	94.3	5	49.7-134			0.390	24
Chloroethane	0.0250	ND	0.113	0.114	90.6	91.0	5	5.00-164			0.400	28.4
2-Chloroethyl vinyl ether	0.125	ND	0.523	0.521	83.7	83.3	5	5.00-159			0.460	40
Chloroform	0.0250	ND	0.116	0.116	92.9	92.9	5	51.2-133			0.0300	22.8
Chloromethane	0.0250	ND	0.0893	0.0893	71.4	71.5	5	31.4-141			0.0400	24.6
2-Chlorotoluene	0.0250	ND	0.112	0.111	89.8	88.5	5	36.1-137			1.43	28.9
4-Chlorotoluene	0.0250	ND	0.109	0.107	87.2	85.6	5	35.4-137			1.83	29.8
1,2-Dibromo-3-Chloropropane	0.0250	ND	0.114	0.112	91.0	89.9	5	40.4-138			1.16	30.8
1,2-Dibromoethane	0.0250	ND	0.111	0.114	89.1	91.4	5	50.2-133			2.56	23.6
Dibromomethane	0.0250	ND	0.111	0.112	89.0	89.9	5	52.4-128			0.920	23
1,2-Dichlorobenzene	0.0250	ND	0.122	0.120	97.4	95.8	5	34.6-139			1.67	29.9
1,3-Dichlorobenzene	0.0250	ND	0.110	0.110	87.9	87.9	5	28.4-142			0.0200	31.2
1,4-Dichlorobenzene	0.0250	ND	0.112	0.113	89.8	90.2	5	35.0-133			0.440	31.1
Dichlorodifluoromethane	0.0250	ND	0.107	0.107	85.4	85.3	5	31.2-144			0.150	30.2
1,1-Dichloroethane	0.0250	ND	0.120	0.120	95.9	95.7	5	49.1-136			0.170	22.9
1,2-Dichloroethane	0.0250	ND	0.118	0.117	94.0	93.3	5	47.1-129			0.800	22.7
1,1-Dichloroethene	0.0250	ND	0.121	0.120	96.6	96.3	5	36.1-142			0.350	25.6
cis-1,2-Dichloroethene	0.0250	ND	0.119	0.117	95.2	93.3	5	50.6-133			2.05	23
trans-1,2-Dichloroethene	0.0250	ND	0.114	0.116	91.1	92.7	5	43.8-135			1.67	24.8
1,2-Dichloropropane	0.0250	0.00800	0.117	0.113	87.6	84.1	5	50.3-134			3.77	22.7
1,1-Dichloropropene	0.0250	ND	0.112	0.113	89.7	90.4	5	43.0-137			0.700	26.4
1,3-Dichloropropane	0.0250	ND	0.111	0.111	89.0	88.7	5	51.4-127			0.380	23.1
cis-1,3-Dichloropropene	0.0250	ND	0.119	0.118	94.9	94.1	5	48.4-134			0.780	23.6
trans-1,3-Dichloropropene	0.0250	0.00392	0.121	0.115	93.9	89.1	5	46.6-135			5.03	25.3

L782357-04 Original Sample (OS) • Matrix Spike (MS) • Matrix Spike Duplicate (MSD)

(OS) 08/14/15 09:54 • (MS) 08/14/15 12:09 • (MSD) 08/14/15 12:28

Analyte	Spike Amount mg/kg	Original Result mg/kg	MS Result mg/kg	MSD Result mg/kg	MS Rec. %	MSD Rec. %	Dilution	Rec. Limits %	MS Qualifier	MSD Qualifier	RPD %	RPD Limits %
2,2-Dichloropropane	0.0250	ND	0.115	0.115	91.8	92.0	5	45.2-141			0.120	26.6
Dicyclopentadiene	0.0250	ND	0.115	0.114	91.7	91.4	5	41.3-141			0.380	28.9
Di-isopropyl ether	0.0250	ND	0.119	0.118	95.1	94.4	5	46.7-140			0.790	23.5
Ethylbenzene	0.0250	ND	0.114	0.113	90.9	90.3	5	44.8-135			0.630	26.9
Hexachloro-1,3-butadiene	0.0250	ND	0.0930	0.0957	74.4	76.6	5	10.0-149			2.88	40
Isopropylbenzene	0.0250	ND	0.108	0.109	86.6	87.2	5	41.9-139			0.680	29.3
p-Isopropyltoluene	0.0250	ND	0.106	0.107	85.0	85.8	5	27.3-146			0.880	35.1
2-Butanone (MEK)	0.125	ND	0.378	0.378	60.5	60.4	5	23.9-170			0.150	28.3
Methylene Chloride	0.0250	ND	0.108	0.111	86.8	88.9	5	46.7-125			2.39	22.2
4-Methyl-2-pentanone (MIBK)	0.125	0.00146	0.509	0.501	81.2	80.0	5	42.4-146			1.49	26.7
Methyl tert-butyl ether	0.0250	ND	0.120	0.120	95.9	96.1	5	50.4-131			0.210	24.8
Naphthalene	0.0250	0.000402	0.109	0.110	86.5	87.8	5	18.4-145			1.41	34
n-Propylbenzene	0.0250	ND	0.110	0.109	87.9	87.3	5	35.2-139			0.720	31.9
Styrene	0.0250	ND	0.121	0.120	96.7	96.0	5	39.7-137			0.650	28.2
1,1,1,2-Tetrachloroethane	0.0250	ND	0.118	0.117	94.3	93.9	5	48.8-136			0.390	25.5
1,1,2,2-Tetrachloroethane	0.0250	ND	0.119	0.118	94.9	94.7	5	45.7-140			0.170	26.4
Tetrachloroethene	0.0250	ND	0.116	0.111	92.4	88.8	5	37.7-140			4.03	29.2
Toluene	0.0250	ND	0.112	0.111	89.3	89.0	5	47.8-127			0.330	24.3
1,1,2-Trichlorotrifluoroethane	0.0250	ND	0.117	0.121	93.8	97.0	5	35.7-146			3.37	28.8
1,2,3-Trichlorobenzene	0.0250	ND	0.110	0.111	87.7	88.6	5	10.0-150			1.05	38.5
1,2,4-Trichlorobenzene	0.0250	ND	0.106	0.109	85.0	87.4	5	10.0-153			2.80	39.3
1,1,1-Trichloroethane	0.0250	ND	0.117	0.114	93.9	91.6	5	49.0-138			2.53	25.3
1,1,2-Trichloroethane	0.0250	ND	0.121	0.121	96.9	96.8	5	52.3-132			0.120	23.4
Trichloroethene	0.0250	ND	0.114	0.113	91.0	90.2	5	48.0-132			0.950	24.8
Trichlorofluoromethane	0.0250	ND	0.109	0.107	86.9	85.9	5	12.8-169			1.21	29.7
1,2,3-Trichloropropane	0.0250	ND	0.110	0.106	88.1	84.6	5	44.4-138			4.05	26.3
1,2,3-Trimethylbenzene	0.0250	ND	0.114	0.114	91.2	90.9	5	41.0-133			0.330	27.6
1,2,4-Trimethylbenzene	0.0250	ND	0.105	0.106	84.3	84.8	5	32.9-139			0.650	30.6
1,3,5-Trimethylbenzene	0.0250	ND	0.109	0.109	87.3	86.9	5	37.1-138			0.450	30.6
Vinyl chloride	0.0250	ND	0.113	0.111	90.0	89.1	5	32.0-146			1.01	26.3
Xylenes, Total	0.0750	ND	0.340	0.336	90.6	89.5	5	42.7-135			1.17	26.6
(S) Toluene-d8					*100*	*100*		*88.7-115*				
(S) Dibromofluoromethane					*98.0*	*98.8*		*76.3-123*				
(S) 4-Bromofluorobenzene					*96.4*	*96.2*		*69.7-129*				

Method Blank (MB)

(MB) 08/13/15 17:32

Analyte	MB Result mg/kg	MB Qualifier	MB RDL mg/kg
Acetone	ND		0.0500
Acrylonitrile	ND		0.0100
Benzene	ND		0.00100
Bromobenzene	ND		0.00100
Bromodichloromethane	ND		0.00100
Bromoform	ND		0.00100
Bromomethane	ND		0.00500
n-Butylbenzene	ND		0.00100
sec-Butylbenzene	ND		0.00100
tert-Butylbenzene	ND		0.00100
Carbon tetrachloride	ND		0.00100
Chlorobenzene	ND		0.00100
Chlorodibromomethane	ND		0.00100
Chloroethane	ND		0.00500
2-Chloroethyl vinyl ether	ND		0.0500
Chloroform	ND		0.00500
Chloromethane	ND		0.00250
2-Chlorotoluene	ND		0.00100
4-Chlorotoluene	ND		0.00100
1,2-Dibromo-3-Chloropropane	ND		0.00500
1,2-Dibromoethane	ND		0.00100
Dibromomethane	ND		0.00100
1,2-Dichlorobenzene	ND		0.00100
1,3-Dichlorobenzene	ND		0.00100
1,4-Dichlorobenzene	ND		0.00100
Dichlorodifluoromethane	ND		0.00500
1,1-Dichloroethane	ND		0.00100
1,2-Dichloroethane	ND		0.00100
1,1-Dichloroethene	ND		0.00100
cis-1,2-Dichloroethene	ND		0.00100
trans-1,2-Dichloroethene	ND		0.00100
1,2-Dichloropropane	ND		0.00100
1,1-Dichloropropene	ND		0.00100
1,3-Dichloropropane	ND		0.00100
cis-1,3-Dichloropropene	ND		0.00100
trans-1,3-Dichloropropene	ND		0.00100

Method Blank (MB)

(MB) 08/13/15 17:32

Analyte	MB Result mg/kg	MB Qualifier	MB RDL mg/kg
2,2-Dichloropropane	ND		0.00100
Dicyclopentadiene	ND		0.00100
Di-isopropyl ether	ND		0.00100
Ethylbenzene	ND		0.00100
Hexachloro-1,3-butadiene	ND		0.00100
Isopropylbenzene	ND		0.00100
p-Isopropyltoluene	ND		0.00100
2-Butanone (MEK)	ND		0.0100
Methylene Chloride	ND		0.00500
4-Methyl-2-pentanone (MIBK)	ND		0.0100
Methyl tert-butyl ether	ND		0.00100
Naphthalene	ND		0.00500
n-Propylbenzene	ND		0.00100
Styrene	ND		0.00100
1,1,1,2-Tetrachloroethane	ND		0.00100
1,1,2,2-Tetrachloroethane	ND		0.00100
Tetrachloroethene	ND		0.00100
Toluene	ND		0.00500
1,1,2-Trichlorotrifluoroethane	ND		0.00100
1,2,3-Trichlorobenzene	ND		0.00100
1,2,4-Trichlorobenzene	ND		0.00100
1,1,1-Trichloroethane	ND		0.00100
1,1,2-Trichloroethane	ND		0.00100
Trichloroethene	ND		0.00100
Trichlorofluoromethane	ND		0.00500
1,2,3-Trichloropropane	ND		0.00250
1,2,3-Trimethylbenzene	ND		0.00100
1,2,4-Trimethylbenzene	ND		0.00100
1,3,5-Trimethylbenzene	ND		0.00100
Vinyl chloride	ND		0.00100
Xylenes, Total	ND		0.00300
(S) Toluene-d8	*102*		*88.7-115*
(S) Dibromofluoromethane	*90.6*		*76.3-123*
(S) 4-Bromofluorobenzene	*103*		*69.7-129*

Laboratory Control Sample (LCS) • Laboratory Control Sample Duplicate (LCSD)

(LCS) 08/13/15 16:32 • (LCSD) 08/13/15 16:52

Analyte	Spike Amount mg/kg	LCS Result mg/kg	LCSD Result mg/kg	LCS Rec. %	LCSD Rec. %	Rec. Limits %	LCS Qualifier	LCSD Qualifier	RPD %	RPD Limits %
Acetone	0.125	0.138	0.144	110	115	25.3-178			4.52	22.9
Acrylonitrile	0.125	0.126	0.130	101	104	57.8-143			2.77	20
Benzene	0.0250	0.0230	0.0235	92.0	94.0	72.6-120			2.10	20
Bromobenzene	0.0250	0.0267	0.0266	107	106	80.3-115			0.540	20
Bromodichloromethane	0.0250	0.0247	0.0242	98.9	96.9	75.3-119			2.04	20
Bromoform	0.0250	0.0286	0.0287	114	115	69.1-135			0.570	20
Bromomethane	0.0250	0.0228	0.0230	91.3	92.0	23.0-191			0.740	20
n-Butylbenzene	0.0250	0.0268	0.0268	107	107	74.2-134			0.120	20
sec-Butylbenzene	0.0250	0.0281	0.0280	112	112	77.8-129			0.300	20
tert-Butylbenzene	0.0250	0.0278	0.0279	111	112	77.2-129			0.170	20
Carbon tetrachloride	0.0250	0.0239	0.0243	95.8	97.0	69.4-129			1.32	20
Chlorobenzene	0.0250	0.0274	0.0272	110	109	78.9-122			1.00	20
Chlorodibromomethane	0.0250	0.0280	0.0279	112	112	76.4-126			0.250	20
Chloroethane	0.0250	0.0232	0.0232	92.7	92.6	47.2-147			0.0800	20
2-Chloroethyl vinyl ether	0.125	0.131	0.132	105	106	16.7-162			0.900	23.7
Chloroform	0.0250	0.0224	0.0226	89.7	90.5	73.3-122			0.930	20
Chloromethane	0.0250	0.0227	0.0228	90.8	91.3	53.1-135			0.570	20
2-Chlorotoluene	0.0250	0.0273	0.0274	109	110	74.6-127			0.240	20
4-Chlorotoluene	0.0250	0.0269	0.0267	108	107	79.5-123			0.940	20
1,2-Dibromo-3-Chloropropane	0.0250	0.0244	0.0249	97.6	99.7	64.9-131			2.13	20
1,2-Dibromoethane	0.0250	0.0265	0.0268	106	107	78.7-123			1.44	20
Dibromomethane	0.0250	0.0254	0.0261	102	105	78.5-117			2.76	20
1,2-Dichlorobenzene	0.0250	0.0254	0.0257	102	103	83.6-119			1.20	20
1,3-Dichlorobenzene	0.0250	0.0277	0.0274	111	110	75.9-129			0.830	20
1,4-Dichlorobenzene	0.0250	0.0258	0.0251	103	101	81.0-115			2.84	20
Dichlorodifluoromethane	0.0250	0.0218	0.0222	87.2	89.0	50.9-139			1.98	20
1,1-Dichloroethane	0.0250	0.0236	0.0242	94.6	96.8	71.7-125			2.31	20
1,2-Dichloroethane	0.0250	0.0221	0.0224	88.6	89.7	67.2-121			1.27	20
1,1-Dichloroethene	0.0250	0.0247	0.0251	98.8	100	60.6-133			1.66	20
cis-1,2-Dichloroethene	0.0250	0.0227	0.0230	90.8	92.1	76.1-121			1.43	20
trans-1,2-Dichloroethene	0.0250	0.0236	0.0238	94.5	95.3	70.7-124			0.850	20
1,2-Dichloropropane	0.0250	0.0271	0.0269	108	108	76.9-123			0.530	20
1,1-Dichloropropene	0.0250	0.0235	0.0238	93.8	95.4	71.2-126			1.66	20
1,3-Dichloropropane	0.0250	0.0262	0.0265	105	106	80.3-114			1.15	20
cis-1,3-Dichloropropene	0.0250	0.0259	0.0263	103	105	77.3-123			1.49	20
trans-1,3-Dichloropropene	0.0250	0.0262	0.0266	105	106	73.0-127			1.38	20

Laboratory Control Sample (LCS) • Laboratory Control Sample Duplicate (LCSD)

(LCS) 08/13/15 16:32 • (LCSD) 08/13/15 16:52

Analyte	Spike Amount mg/kg	LCS Result mg/kg	LCSD Result mg/kg	LCS Rec. %	LCSD Rec. %	Rec. Limits %	LCS Qualifier	LCSD Qualifier	RPD %	RPD Limits %
2,2-Dichloropropane	0.0250	0.0223	0.0228	89.4	91.2	61.9-132			1.96	20
Dicyclopentadiene	0.0250	0.0266	0.0265	106	106	73.1-126			0.280	20
Di-isopropyl ether	0.0250	0.0240	0.0247	96.1	98.8	67.2-131			2.72	20
Ethylbenzene	0.0250	0.0267	0.0266	107	106	78.6-124			0.260	20
Hexachloro-1,3-butadiene	0.0250	0.0283	0.0285	113	114	69.2-136			0.630	20
Isopropylbenzene	0.0250	0.0277	0.0274	111	110	79.4-126			0.800	20
p-Isopropyltoluene	0.0250	0.0286	0.0282	114	113	75.4-132			1.29	20
2-Butanone (MEK)	0.125	0.129	0.133	103	106	44.5-154			2.71	21.3
Methylene Chloride	0.0250	0.0238	0.0241	95.2	96.5	68.2-119			1.38	20
4-Methyl-2-pentanone (MIBK)	0.125	0.133	0.134	107	107	61.1-138			0.860	20
Methyl tert-butyl ether	0.0250	0.0231	0.0236	92.3	94.4	70.2-122			2.31	20
Naphthalene	0.0250	0.0251	0.0258	100	103	69.9-132			2.70	20
n-Propylbenzene	0.0250	0.0274	0.0271	110	108	80.2-124			0.970	20
Styrene	0.0250	0.0269	0.0266	108	106	79.4-124			1.25	20
1,1,1,2-Tetrachloroethane	0.0250	0.0266	0.0267	106	107	76.7-127			0.340	20
1,1,2,2-Tetrachloroethane	0.0250	0.0265	0.0268	106	107	78.8-124			1.24	20
Tetrachloroethene	0.0250	0.0274	0.0271	109	108	71.1-133			1.01	20
Toluene	0.0250	0.0254	0.0254	102	102	76.7-116			0.130	20
1,1,2-Trichlorotrifluoroethane	0.0250	0.0245	0.0244	98.1	97.8	62.6-138			0.350	20
1,2,3-Trichlorobenzene	0.0250	0.0272	0.0277	109	111	72.5-137			1.80	20
1,2,4-Trichlorobenzene	0.0250	0.0273	0.0276	109	110	74.0-137			1.25	20
1,1,1-Trichloroethane	0.0250	0.0225	0.0230	89.9	91.9	69.9-127			2.22	20
1,1,2-Trichloroethane	0.0250	0.0263	0.0260	105	104	81.9-119			0.940	20
Trichloroethene	0.0250	0.0261	0.0259	104	104	77.2-122			0.510	20
Trichlorofluoromethane	0.0250	0.0246	0.0251	98.3	100	51.5-151			2.01	20
1,2,3-Trichloropropane	0.0250	0.0282	0.0275	113	110	74.0-124			2.40	20
1,2,3-Trimethylbenzene	0.0250	0.0256	0.0257	102	103	79.4-118			0.330	20
1,2,4-Trimethylbenzene	0.0250	0.0276	0.0274	110	110	77.1-124			0.750	20
1,3,5-Trimethylbenzene	0.0250	0.0276	0.0275	110	110	79.0-125			0.510	20
Vinyl chloride	0.0250	0.0234	0.0236	93.8	94.3	58.4-134			0.570	20
Xylenes, Total	0.0750	0.0809	0.0799	108	107	78.1-123			1.28	20
(S) Toluene-d8				*102*	*102*	*88.7-115*				
(S) Dibromofluoromethane				*89.8*	*91.6*	*76.3-123*				
(S) 4-Bromofluorobenzene				*102*	*101*	*69.7-129*				

L782612-01 Original Sample (OS) • Matrix Spike (MS) • Matrix Spike Duplicate (MSD)

(OS) 08/13/15 21:54 • (MS) 08/13/15 20:35 • (MSD) 08/13/15 20:55

Analyte	Spike Amount mg/kg	Original Result mg/kg	MS Result mg/kg	MSD Result mg/kg	MS Rec. %	MSD Rec. %	Dilution	Rec. Limits %	MS Qualifier	MSD Qualifier	RPD %	RPD Limits %
Acetone	0.125	0.0436	0.338	0.589	47.1	87.3	5	10.0-130		J3	54.2	31.5
Acrylonitrile	0.125	ND	0.360	0.658	57.7	105	5	39.3-152		J3	58.5	27.2
Benzene	0.0250	ND	0.0744	0.118	59.5	94.7	5	47.8-131		J3	45.6	22.8
Bromobenzene	0.0250	0.00103	0.0751	0.126	59.2	100	5	40.0-130		J3	50.9	27.4
Bromodichloromethane	0.0250	ND	0.0919	0.127	73.5	102	5	50.6-128		J3	32.0	22.8
Bromoform	0.0250	ND	0.0796	0.142	63.7	113	5	43.3-139		J3	56.0	25.9
Bromomethane	0.0250	ND	0.0708	0.113	56.7	90.5	5	5.00-189		J3	46.0	26.7
n-Butylbenzene	0.0250	ND	0.0584	0.118	46.7	94.6	5	23.6-146		J3	67.7	39.2
sec-Butylbenzene	0.0250	ND	0.0740	0.130	59.2	104	5	31.0-142		J3	54.6	34.7
tert-Butylbenzene	0.0250	ND	0.0768	0.133	61.5	106	5	36.9-142		J3	53.6	31.7
Carbon tetrachloride	0.0250	ND	0.0768	0.122	61.5	97.7	5	46.0-140		J3	45.5	27.2
Chlorobenzene	0.0250	ND	0.0778	0.132	62.2	106	5	44.1-134		J3	51.8	25.7
Chlorodibromomethane	0.0250	ND	0.0799	0.137	63.9	110	5	49.7-134		J3	52.8	24
Chloroethane	0.0250	ND	0.0736	0.115	58.9	91.9	5	5.00-164		J3	43.9	28.4
2-Chloroethyl vinyl ether	0.125	ND	0.478	0.670	76.4	107	5	5.00-159			33.6	40
Chloroform	0.0250	ND	0.0725	0.116	58.0	92.5	5	51.2-133		J3	45.8	22.8
Chloromethane	0.0250	ND	0.0687	0.107	55.0	85.8	5	31.4-141		J3	43.8	24.6
2-Chlorotoluene	0.0250	ND	0.0752	0.128	60.2	103	5	36.1-137		J3	52.1	28.9
4-Chlorotoluene	0.0250	ND	0.0727	0.124	58.2	99.5	5	35.4-137		J3	52.4	29.8
1,2-Dibromo-3-Chloropropane	0.0250	ND	0.0562	0.124	44.9	99.4	5	40.4-138		J3	75.5	30.8
1,2-Dibromoethane	0.0250	ND	0.0758	0.133	60.7	106	5	50.2-133		J3	54.7	23.6
Dibromomethane	0.0250	ND	0.0940	0.132	75.2	105	5	52.4-128		J3	33.3	23
1,2-Dichlorobenzene	0.0250	ND	0.0624	0.125	49.9	100	5	34.6-139		J3	66.8	29.9
1,3-Dichlorobenzene	0.0250	ND	0.0742	0.128	59.4	102	5	28.4-142		J3	53.1	31.2
1,4-Dichlorobenzene	0.0250	ND	0.0617	0.121	49.3	97.1	5	35.0-133		J3	65.3	31.1
Dichlorodifluoromethane	0.0250	ND	0.0624	0.100	50.0	80.0	5	31.2-144		J3	46.2	30.2
1,1-Dichloroethane	0.0250	ND	0.0761	0.122	60.9	97.9	5	49.1-136		J3	46.6	22.9
1,2-Dichloroethane	0.0250	ND	0.0708	0.115	56.7	91.9	5	47.1-129		J3	47.4	22.7
1,1-Dichloroethene	0.0250	ND	0.0798	0.127	63.9	102	5	36.1-142		J3	45.9	25.6
cis-1,2-Dichloroethene	0.0250	ND	0.0726	0.117	58.1	93.5	5	50.6-133		J3	46.7	23
trans-1,2-Dichloroethene	0.0250	ND	0.0739	0.118	59.2	94.8	5	43.8-135		J3	46.3	24.8
1,2-Dichloropropane	0.0250	0.00884	0.0996	0.139	72.6	104	5	50.3-134		J3	32.8	22.7
1,1-Dichloropropene	0.0250	ND	0.0723	0.116	57.8	93.1	5	43.0-137		J3	46.8	26.4
1,3-Dichloropropane	0.0250	0.000362	0.0759	0.131	60.4	105	5	51.4-127		J3	53.6	23.1
cis-1,3-Dichloropropene	0.0250	ND	0.0951	0.131	76.0	105	5	48.4-134		J3	32.0	23.6
trans-1,3-Dichloropropene	0.0250	0.00360	0.0967	0.134	74.5	104	5	46.6-135		J3	32.3	25.3

L782612-01 Original Sample (OS) • Matrix Spike (MS) • Matrix Spike Duplicate (MSD)

(OS) 08/13/15 21:54 • (MS) 08/13/15 20:35 • (MSD) 08/13/15 20:55

Analyte	Spike Amount mg/kg	Original Result mg/kg	MS Result mg/kg	MSD Result mg/kg	MS Rec. %	MSD Rec. %	Dilution	Rec. Limits %	MS Qualifier	MSD Qualifier	RPD %	RPD Limits %
2,2-Dichloropropane	0.0250	ND	0.0754	0.119	60.3	95.5	5	45.2-141		J3	45.1	26.6
Dicyclopentadiene	0.0250	ND	0.0746	0.129	59.7	103	5	41.3-141		J3	53.4	28.9
Di-isopropyl ether	0.0250	ND	0.0783	0.125	62.6	100	5	46.7-140		J3	46.3	23.5
Ethylbenzene	0.0250	ND	0.0748	0.128	59.9	102	5	44.8-135		J3	52.3	26.9
Hexachloro-1,3-butadiene	0.0250	ND	0.0519	0.119	41.5	94.9	5	10.0-149		J3	78.3	40
Isopropylbenzene	0.0250	ND	0.0761	0.130	60.9	104	5	41.9-139		J3	52.4	29.3
p-Isopropyltoluene	0.0250	ND	0.0738	0.128	59.1	102	5	27.3-146		J3	53.6	35.1
2-Butanone (MEK)	0.125	0.00985	0.340	0.602	52.9	94.7	5	23.9-170		J3	55.5	28.3
Methylene Chloride	0.0250	ND	0.0742	0.120	59.4	95.8	5	46.7-125		J3	46.9	22.2
4-Methyl-2-pentanone (MIBK)	0.125	0.000495	0.460	0.687	73.5	110	5	42.4-146		J3	39.6	26.7
Methyl tert-butyl ether	0.0250	ND	0.0731	0.121	58.4	96.8	5	50.4-131		J3	49.4	24.8
Naphthalene	0.0250	0.00158	0.0584	0.124	45.4	97.7	5	18.4-145		J3	71.8	34
n-Propylbenzene	0.0250	ND	0.0742	0.127	59.4	101	5	35.2-139		J3	52.4	31.9
Styrene	0.0250	ND	0.0742	0.129	59.4	103	5	39.7-137		J3	53.8	28.2
1,1,1,2-Tetrachloroethane	0.0250	ND	0.0770	0.133	61.6	106	5	48.8-136		J3	53.1	25.5
1,1,2,2-Tetrachloroethane	0.0250	ND	0.0754	0.137	60.3	110	5	45.7-140		J3	57.9	26.4
Tetrachloroethene	0.0250	ND	0.0726	0.123	58.1	98.1	5	37.7-140		J3	51.2	29.2
Toluene	0.0250	ND	0.0925	0.128	74.0	102	5	47.8-127		J3	32.0	24.3
1,1,2-Trichlorotrifluoroethane	0.0250	ND	0.0739	0.119	59.1	95.0	5	35.7-146		J3	46.5	28.8
1,2,3-Trichlorobenzene	0.0250	ND	0.0586	0.122	46.9	97.3	5	10.0-150		J3	69.9	38.5
1,2,4-Trichlorobenzene	0.0250	ND	0.0592	0.121	47.4	96.9	5	10.0-153		J3	68.7	39.3
1,1,1-Trichloroethane	0.0250	ND	0.0732	0.117	58.5	93.5	5	49.0-138		J3	46.1	25.3
1,1,2-Trichloroethane	0.0250	ND	0.0750	0.131	60.0	105	5	52.3-132		J3	54.3	23.4
Trichloroethene	0.0250	ND	0.0928	0.128	74.3	102	5	48.0-132		J3	31.7	24.8
Trichlorofluoromethane	0.0250	ND	0.0769	0.124	61.6	98.8	5	12.8-169		J3	46.5	29.7
1,2,3-Trichloropropane	0.0250	ND	0.0746	0.136	59.7	109	5	44.4-138		J3	58.1	26.3
1,2,3-Trimethylbenzene	0.0250	ND	0.0632	0.126	50.6	101	5	41.0-133		J3	66.5	27.6
1,2,4-Trimethylbenzene	0.0250	ND	0.0742	0.129	59.3	103	5	32.9-139		J3	53.7	30.6
1,3,5-Trimethylbenzene	0.0250	ND	0.0749	0.130	59.9	104	5	37.1-138		J3	53.7	30.6
Vinyl chloride	0.0250	ND	0.0720	0.114	57.6	91.0	5	32.0-146		J3	44.9	26.3
Xylenes, Total	0.0750	ND	0.226	0.389	60.4	104	5	42.7-135		J3	52.7	26.6
(S) Toluene-d8					*127*	*103*		*88.7-115*	J1			
(S) Dibromofluoromethane					*68.4*	*93.8*		*76.3-123*	J2			
(S) 4-Bromofluorobenzene					*110*	*99.1*		*69.7-129*				

Method Blank (MB)

(MB) 08/13/15 12:00

Analyte	MB Result mg/kg	MB Qualifier	MB RDL mg/kg
Acenaphthene	ND		0.0330
Acenaphthylene	ND		0.0330
Anthracene	ND		0.0330
Benzidine	ND		0.333
Benzo(a)anthracene	ND		0.0330
Benzo(b)fluoranthene	ND		0.0330
Benzo(k)fluoranthene	ND		0.0330
Benzo(g,h,i)perylene	ND		0.0330
Benzo(a)pyrene	ND		0.0330
Bis(2-chlorethoxy)methane	ND		0.333
Bis(2-chloroethyl)ether	ND		0.333
Bis(2-chloroisopropyl)ether	ND		0.333
4-Bromophenyl-phenylether	ND		0.333
2-Chloronaphthalene	ND		0.0330
4-Chlorophenyl-phenylether	ND		0.333
Chrysene	ND		0.0330
Dibenz(a,h)anthracene	ND		0.0330
3,3-Dichlorobenzidine	ND		0.333
2,4-Dinitrotoluene	ND		0.333
2,6-Dinitrotoluene	ND		0.333
Fluoranthene	ND		0.0330
Fluorene	ND		0.0330
Hexachlorobenzene	ND		0.333
Hexachloro-1,3-butadiene	ND		0.333
Hexachlorocyclopentadiene	ND		0.333
Hexachloroethane	ND		0.333
Indeno(1,2,3-cd)pyrene	ND		0.0330
Isophorone	ND		0.333
Naphthalene	ND		0.0330
Nitrobenzene	ND		0.333
n-Nitrosodimethylamine	ND		0.333
n-Nitrosodiphenylamine	ND		0.333
n-Nitrosodi-n-propylamine	ND		0.333
Phenanthrene	ND		0.0330
Benzylbutyl phthalate	ND		0.333
Bis(2-ethylhexyl)phthalate	ND		0.333

Method Blank (MB)

(MB) 08/13/15 12:00

Analyte	MB Result mg/kg	MB Qualifier	MB RDL mg/kg
Di-n-butyl phthalate	ND		0.333
Diethyl phthalate	ND		0.333
Dimethyl phthalate	ND		0.333
Di-n-octyl phthalate	ND		0.333
Pyrene	ND		0.0330
1,2,4-Trichlorobenzene	ND		0.333
4-Chloro-3-methylphenol	ND		0.333
2-Chlorophenol	ND		0.333
2,4-Dichlorophenol	ND		0.333
2,4-Dimethylphenol	ND		0.333
4,6-Dinitro-2-methylphenol	ND		0.333
2,4-Dinitrophenol	ND		0.333
2-Nitrophenol	ND		0.333
4-Nitrophenol	ND		0.333
Pentachlorophenol	ND		0.333
Phenol	ND		0.333
2,4,6-Trichlorophenol	ND		0.333
(S) Nitrobenzene-d5	*93.2*		*21.9-129*
(S) 2-Fluorobiphenyl	*96.5*		*34.9-129*
(S) p-Terphenyl-d14	*92.9*		*21.5-128*
(S) Phenol-d5	*92.1*		*26.3-121*
(S) 2-Fluorophenol	*88.6*		*21.1-116*
(S) 2,4,6-Tribromophenol	*94.5*		*21.6-142*

Laboratory Control Sample (LCS) • Laboratory Control Sample Duplicate (LCSD)

(LCS) 08/13/15 11:13 • (LCSD) 08/13/15 11:36

Analyte	Spike Amount mg/kg	LCS Result mg/kg	LCSD Result mg/kg	LCS Rec. %	LCSD Rec. %	Rec. Limits %	LCS Qualifier	LCSD Qualifier	RPD %	RPD Limits %
Acenaphthene	0.667	0.592	0.564	88.7	84.5	48.9-107			4.86	20
Acenaphthylene	0.667	0.601	0.572	90.2	85.7	49.2-111			5.07	20
Anthracene	0.667	0.623	0.600	93.4	90.0	52.0-112			3.77	20
Benzidine	0.667	0.0329	0.0368	4.93	5.52	0.000-48.0			11.2	40
Benzo(a)anthracene	0.667	0.639	0.600	95.8	90.0	52.3-106			6.23	20
Benzo(b)fluoranthene	0.667	0.633	0.644	94.9	96.6	51.3-106			1.70	20
Benzo(k)fluoranthene	0.667	0.590	0.588	88.5	88.1	52.9-107			0.460	20

Laboratory Control Sample (LCS) • Laboratory Control Sample Duplicate (LCSD)

(LCS) 08/13/15 11:13 • (LCSD) 08/13/15 11:36

Analyte	Spike Amount mg/kg	LCS Result mg/kg	LCSD Result mg/kg	LCS Rec. %	LCSD Rec. %	Rec. Limits %	LCS Qualifier	LCSD Qualifier	RPD %	RPD Limits %
Benzo(g,h,i)perylene	0.667	0.645	0.645	96.7	96.6	45.8-108			0.0800	20
Benzo(a)pyrene	0.667	0.614	0.608	92.0	91.1	51.9-106			0.990	20
Bis(2-chlorethoxy)methane	0.667	0.560	0.545	83.9	81.7	44.9-108			2.73	20
Bis(2-chloroethyl)ether	0.667	0.542	0.527	81.2	79.0	32.5-112			2.78	26
Bis(2-chloroisopropyl)ether	0.667	0.572	0.561	85.8	84.1	40.4-99.0			2.09	20.7
4-Bromophenyl-phenylether	0.667	0.623	0.600	93.5	89.9	51.4-110			3.84	20
2-Chloronaphthalene	0.667	0.613	0.589	91.9	88.3	47.1-105			3.92	20
4-Chlorophenyl-phenylether	0.667	0.581	0.556	87.1	83.3	48.1-108			4.50	20
Chrysene	0.667	0.612	0.576	91.7	86.4	54.4-110			5.95	20
Dibenz(a,h)anthracene	0.667	0.637	0.631	95.5	94.6	45.7-111			0.940	20
3,3-Dichlorobenzidine	0.667	0.480	0.469	72.0	70.4	21.0-101			2.32	22
2,4-Dinitrotoluene	0.667	0.663	0.639	99.4	95.8	53.0-112			3.63	20
2,6-Dinitrotoluene	0.667	0.628	0.616	94.2	92.3	51.6-110			1.99	20
Fluoranthene	0.667	0.609	0.594	91.3	89.1	53.7-110			2.44	20
Fluorene	0.667	0.586	0.572	87.8	85.7	51.1-109			2.37	20
Hexachlorobenzene	0.667	0.629	0.603	94.3	90.3	43.2-104			4.30	20.1
Hexachloro-1,3-butadiene	0.667	0.539	0.494	80.9	74.0	41.5-112			8.83	20
Hexachlorocyclopentadiene	0.667	0.383	0.364	57.5	54.6	13.5-123			5.13	20.7
Hexachloroethane	0.667	0.528	0.507	79.2	76.1	36.2-103			4.01	22.7
Indeno(1,2,3-cd)pyrene	0.667	0.635	0.626	95.2	93.9	47.5-109			1.40	20
Isophorone	0.667	0.606	0.604	90.8	90.6	28.8-104			0.210	20
Naphthalene	0.667	0.559	0.519	83.7	77.8	43.4-103			7.36	20
Nitrobenzene	0.667	0.578	0.572	86.7	85.7	40.7-109			1.10	21
n-Nitrosodimethylamine	0.667	0.514	0.527	77.1	79.1	18.1-122			2.56	23.5
n-Nitrosodiphenylamine	0.667	0.586	0.569	87.9	85.3	48.8-107			3.07	20
n-Nitrosodi-n-propylamine	0.667	0.577	0.590	86.4	88.4	43.3-109			2.25	20
Phenanthrene	0.667	0.603	0.584	90.4	87.5	51.6-107			3.24	20
Benzylbutyl phthalate	0.667	0.663	0.648	99.3	97.2	47.5-115			2.16	20
Bis(2-ethylhexyl)phthalate	0.667	0.650	0.635	97.4	95.2	48.1-116			2.35	20.5
Di-n-butyl phthalate	0.667	0.623	0.622	93.5	93.2	49.7-113			0.280	20
Diethyl phthalate	0.667	0.632	0.612	94.8	91.8	52.0-112			3.23	20
Dimethyl phthalate	0.667	0.615	0.600	92.2	90.0	51.4-108			2.47	20
Di-n-octyl phthalate	0.667	0.649	0.629	97.2	94.2	49.6-112			3.13	22
Pyrene	0.667	0.614	0.590	92.0	88.4	47.1-108			4.01	20
1,2,4-Trichlorobenzene	0.667	0.548	0.504	82.2	75.5	39.8-100			8.46	20
4-Chloro-3-methylphenol	0.667	0.613	0.603	91.9	90.4	51.1-113			1.64	20

Laboratory Control Sample (LCS) • Laboratory Control Sample Duplicate (LCSD)

(LCS) 08/13/15 11:13 • (LCSD) 08/13/15 11:36

Analyte	Spike Amount mg/kg	LCS Result mg/kg	LCSD Result mg/kg	LCS Rec. %	LCSD Rec. %	Rec. Limits %	LCS Qualifier	LCSD Qualifier	RPD %	RPD Limits %
2-Chlorophenol	0.667	0.558	0.536	83.7	80.4	40.8-103			4.04	20
2,4-Dichlorophenol	0.667	0.599	0.576	89.8	86.4	46.2-109			3.85	20
2,4-Dimethylphenol	0.667	0.564	0.530	84.6	79.4	42.2-110			6.31	20
4,6-Dinitro-2-methylphenol	0.667	0.572	0.579	85.8	86.8	23.1-119			1.13	23.7
2,4-Dinitrophenol	0.667	0.413	0.436	62.0	65.4	10.0-105			5.31	36.5
2-Nitrophenol	0.667	0.652	0.624	97.8	93.6	44.2-113			4.39	20.9
4-Nitrophenol	0.667	0.644	0.650	96.6	97.4	34.8-109			0.860	20
Pentachlorophenol	0.667	0.562	0.550	84.3	82.5	16.2-102			2.14	22.9
Phenol	0.667	0.589	0.568	88.3	85.1	41.5-106			3.67	20
2,4,6-Trichlorophenol	0.667	0.659	0.632	98.8	94.7	44.4-108			4.21	20
(S) Nitrobenzene-d5				*83.9*	*79.7*	*21.9-129*				
(S) 2-Fluorobiphenyl				*88.1*	*84.0*	*34.9-129*				
(S) p-Terphenyl-d14				*86.5*	*81.2*	*21.5-128*				
(S) Phenol-d5				*86.3*	*83.1*	*26.3-121*				
(S) 2-Fluorophenol				*82.0*	*79.7*	*21.1-116*				
(S) 2,4,6-Tribromophenol				*103*	*96.4*	*21.6-142*				

L782221-12 Original Sample (OS) • Matrix Spike (MS) • Matrix Spike Duplicate (MSD)

(OS) 08/13/15 13:57 • (MS) 08/13/15 14:20 • (MSD) 08/13/15 14:43

Analyte	Spike Amount mg/kg	Original Result mg/kg	MS Result mg/kg	MSD Result mg/kg	MS Rec. %	MSD Rec. %	Dilution	Rec. Limits %	MS Qualifier	MSD Qualifier	RPD %	RPD Limits %
Acenaphthene	0.667	ND	0.628	0.538	94.2	80.6	1	32.2-134			15.5	27.3
Acenaphthylene	0.667	ND	0.640	0.551	95.9	82.6	1	38.7-129			15.0	25.9
Anthracene	0.667	ND	0.665	0.580	99.7	86.9	1	32.3-137			13.7	28.4
Benzidine	0.667	ND	0.0839	0.0630	12.6	9.45	1	0.000-49.9			28.5	40
Benzo(a)anthracene	0.667	ND	0.633	0.553	94.9	83.0	1	33.3-124			13.4	29
Benzo(b)fluoranthene	0.667	ND	0.660	0.539	98.9	80.8	1	23.3-133			20.2	30.3
Benzo(k)fluoranthene	0.667	ND	0.672	0.576	101	86.4	1	31.0-129			15.4	26.7
Benzo(g,h,i)perylene	0.667	ND	0.546	0.428	81.8	64.2	1	10.0-127			24.1	31.9
Benzo(a)pyrene	0.667	ND	0.654	0.550	98.0	82.5	1	28.2-128			17.2	28.4
Bis(2-chlorethoxy)methane	0.667	ND	0.714	0.652	107	97.8	1	35.0-132			9.01	26.1
Bis(2-chloroethyl)ether	0.667	ND	0.560	0.399	84.0	59.9	1	28.8-128			33.5	33.6
Bis(2-chloroisopropyl)ether	0.667	0.0497	0.692	0.633	96.3	87.4	1	31.8-118			8.97	31.7
4-Bromophenyl-phenylether	0.667	ND	0.649	0.574	97.3	86.1	1	39.0-130			12.2	26
2-Chloronaphthalene	0.667	ND	0.659	0.580	98.8	87.0	1	37.5-123			12.6	26.5

L782221-12 Original Sample (OS) • Matrix Spike (MS) • Matrix Spike Duplicate (MSD)

(OS) 08/13/15 13:57 • (MS) 08/13/15 14:20 • (MSD) 08/13/15 14:43

Analyte	Spike Amount mg/kg	Original Result mg/kg	MS Result mg/kg	MSD Result mg/kg	MS Rec. %	MSD Rec. %	Dilution	Rec. Limits %	MS Qualifier	MSD Qualifier	RPD %	RPD Limits %
4-Chlorophenyl-phenylether	0.667	ND	0.634	0.547	95.1	82.0	1	37.9-123			14.8	25.9
Chrysene	0.667	ND	0.629	0.534	94.4	80.1	1	36.3-129			16.4	28
Dibenz(a,h)anthracene	0.667	ND	0.565	0.459	84.7	68.9	1	10.5-128			20.6	29.5
3,3-Dichlorobenzidine	0.667	ND	0.254	0.323	38.1	48.4	1	10.0-129			24.0	40
2,4-Dinitrotoluene	0.667	ND	0.747	0.690	112	103	1	27.8-147			7.91	29.7
2,6-Dinitrotoluene	0.667	ND	0.728	0.632	109	94.7	1	36.5-137			14.1	29.7
Fluoranthene	0.667	ND	0.655	0.576	98.2	86.4	1	27.9-138			12.8	26.9
Fluorene	0.667	ND	0.664	0.567	99.5	85.1	1	34.0-133			15.6	27.1
Hexachlorobenzene	0.667	ND	0.655	0.564	98.2	84.6	1	34.4-116			14.9	25.4
Hexachloro-1,3-butadiene	0.667	ND	0.579	0.518	86.8	77.7	1	36.5-125			11.1	29.7
Hexachlorocyclopentadiene	0.667	ND	0.335	0.238	50.3	35.8	1	10.0-124			33.7	37.5
Hexachloroethane	0.667	ND	2.90	2.60	435	390	1	11.3-143	V	V	11.0	31.9
Indeno(1,2,3-cd)pyrene	0.667	ND	0.577	0.458	86.5	68.6	1	10.0-128			23.0	31.5
Isophorone	0.667	ND	0.681	0.596	102	89.4	1	25.7-116			13.3	27.7
Nitrobenzene	0.667	ND	0.774	0.723	116	108	1	30.9-134			6.81	27.8
n-Nitrosodimethylamine	0.667	ND	0.549	0.474	82.3	71.1	1	19.2-127			14.6	32
n-Nitrosodiphenylamine	0.667	ND	0.633	0.552	94.9	82.8	1	26.8-133			13.6	25.9
n-Nitrosodi-n-propylamine	0.667	ND	0.662	0.575	99.2	86.2	1	33.0-134			14.1	28.2
Phenanthrene	0.667	ND	0.641	0.564	96.1	84.5	1	30.8-137			12.8	26.5
Benzylbutyl phthalate	0.667	ND	0.664	0.577	99.5	86.5	1	33.4-128			14.0	28.5
Bis(2-ethylhexyl)phthalate	0.667	0.00983	0.657	0.570	97.0	84.0	1	21.8-141			14.1	35.2
Di-n-butyl phthalate	0.667	0.00758	0.658	0.578	97.5	85.6	1	32.2-133			12.9	25.9
Diethyl phthalate	0.667	ND	0.701	0.614	105	92.1	1	39.4-136			13.2	25.5
Dimethyl phthalate	0.667	ND	0.688	0.600	103	89.9	1	35.8-137			13.7	25.4
Di-n-octyl phthalate	0.667	ND	0.658	0.572	98.7	85.7	1	28.5-128			14.1	32.5
Pyrene	0.667	ND	0.617	0.519	92.5	77.8	1	24.1-130			17.3	29.9
1,2,4-Trichlorobenzene	0.667	ND	0.581	0.517	87.0	77.4	1	36.5-114			11.7	28.4
4-Chloro-3-methylphenol	0.667	ND	0.721	0.618	108	92.7	1	27.0-154			15.3	26.6
2-Chlorophenol	0.667	ND	0.621	0.522	93.1	78.2	1	33.2-121			17.4	29.3
2,4-Dichlorophenol	0.667	ND	0.698	0.595	105	89.2	1	34.8-134			15.9	27.3
2,4-Dimethylphenol	0.667	ND	0.907	0.852	136	128	1	12.3-149			6.27	32.3
4,6-Dinitro-2-methylphenol	0.667	ND	0.571	0.447	85.7	66.9	1	10.0-144			24.6	32.7
2,4-Dinitrophenol	0.667	ND	0.591	0.438	88.7	65.7	1	10.0-121			29.8	39.4
2-Nitrophenol	0.667	ND	0.768	0.682	115	102	1	29.5-144			11.9	29.9
4-Nitrophenol	0.667	ND	0.823	0.692	123	104	1	20.0-133			17.4	30.2
Pentachlorophenol	0.667	ND	0.749	0.646	112	96.9	1	10.0-139			14.8	28.3

L782221-12 Original Sample (OS) • Matrix Spike (MS) • Matrix Spike Duplicate (MSD)

(OS) 08/13/15 13:57 • (MS) 08/13/15 14:20 • (MSD) 08/13/15 14:43

Analyte	Spike Amount mg/kg	Original Result mg/kg	MS Result mg/kg	MSD Result mg/kg	MS Rec. %	MSD Rec. %	Dilution	Rec. Limits %	MS Qualifier	MSD Qualifier	RPD %	RPD Limits %
Phenol	0.667	ND	0.697	0.591	105	88.7	1	25.1-130			16.4	29.6
2,4,6-Trichlorophenol	0.667	ND	0.764	0.698	115	105	1	33.8-133			9.01	28.1
(S) Nitrobenzene-d5					*103*	*92.7*		*21.9-129*				
(S) 2-Fluorobiphenyl					*93.8*	*80.9*		*34.9-129*				
(S) p-Terphenyl-d14					*84.6*	*72.7*		*21.5-128*				
(S) Phenol-d5					*98.2*	*83.2*		*26.3-121*				
(S) 2-Fluorophenol					*90.7*	*78.6*		*21.1-116*				
(S) 2,4,6-Tribromophenol					*119*	*104*		*21.6-142*				

L782221-12 Original Sample (OS) • Matrix Spike (MS) • Matrix Spike Duplicate (MSD)

(OS) 08/14/15 09:41 • (MS) 08/14/15 10:04 • (MSD) 08/14/15 10:27

Analyte	Spike Amount mg/kg	Original Result mg/kg	MS Result mg/kg	MSD Result mg/kg	MS Rec. %	MSD Rec. %	Dilution	Rec. Limits %	MS Qualifier	MSD Qualifier	RPD %	RPD Limits %
Naphthalene	0.1334	4.64	3.99	4.34	0.000	0.000	5	36.4-121	V	V	8.34	27.2

Method Blank (MB)

(MB) 08/13/15 11:53

Analyte	MB Result mg/kg	MB Qualifier	MB RDL mg/kg
Acenaphthene	ND		0.0330
Acenaphthylene	ND		0.0330
Anthracene	ND		0.0330
Benzidine	ND		0.333
Benzo(a)anthracene	ND		0.0330
Benzo(b)fluoranthene	ND		0.0330
Benzo(k)fluoranthene	ND		0.0330
Benzo(g,h,i)perylene	ND		0.0330
Benzo(a)pyrene	ND		0.0330
Bis(2-chlorethoxy)methane	ND		0.333
Bis(2-chloroethyl)ether	ND		0.333
Bis(2-chloroisopropyl)ether	ND		0.333
4-Bromophenyl-phenylether	ND		0.333
2-Chloronaphthalene	ND		0.0330
4-Chlorophenyl-phenylether	ND		0.333
Chrysene	ND		0.0330
Dibenz(a,h)anthracene	ND		0.0330
3,3-Dichlorobenzidine	ND		0.333
2,4-Dinitrotoluene	ND		0.333
2,6-Dinitrotoluene	ND		0.333
Fluoranthene	ND		0.0330
Fluorene	ND		0.0330
Hexachlorobenzene	ND		0.333
Hexachloro-1,3-butadiene	ND		0.333
Hexachlorocyclopentadiene	ND		0.333
Hexachloroethane	ND		0.333
Indeno(1,2,3-cd)pyrene	ND		0.0330
Isophorone	ND		0.333
Naphthalene	ND		0.0330
Nitrobenzene	ND		0.333
n-Nitrosodimethylamine	ND		0.333
n-Nitrosodiphenylamine	ND		0.333
n-Nitrosodi-n-propylamine	ND		0.333
Phenanthrene	ND		0.0330
Benzylbutyl phthalate	ND		0.333
Bis(2-ethylhexyl)phthalate	ND		0.333

Method Blank (MB)

(MB) 08/13/15 11:53

Analyte	MB Result mg/kg	MB Qualifier	MB RDL mg/kg
Di-n-butyl phthalate	ND		0.333
Diethyl phthalate	ND		0.333
Dimethyl phthalate	ND		0.333
Di-n-octyl phthalate	ND		0.333
Pyrene	ND		0.0330
1,2,4-Trichlorobenzene	ND		0.333
4-Chloro-3-methylphenol	ND		0.333
2-Chlorophenol	ND		0.333
2,4-Dichlorophenol	ND		0.333
2,4-Dimethylphenol	ND		0.333
4,6-Dinitro-2-methylphenol	ND		0.333
2,4-Dinitrophenol	ND		0.333
2-Nitrophenol	ND		0.333
4-Nitrophenol	ND		0.333
Pentachlorophenol	ND		0.333
Phenol	ND		0.333
2,4,6-Trichlorophenol	ND		0.333
(S) Nitrobenzene-d5	*50.9*		*21.9-129*
(S) 2-Fluorobiphenyl	*60.7*		*34.9-129*
(S) p-Terphenyl-d14	*60.0*		*21.5-128*
(S) Phenol-d5	*51.1*		*26.3-121*
(S) 2-Fluorophenol	*47.7*		*21.1-116*
(S) 2,4,6-Tribromophenol	*66.4*		*21.6-142*

Laboratory Control Sample (LCS) • Laboratory Control Sample Duplicate (LCSD)

(LCS) 08/13/15 11:03 • (LCSD) 08/13/15 11:28

Analyte	Spike Amount mg/kg	LCS Result mg/kg	LCSD Result mg/kg	LCS Rec. %	LCSD Rec. %	Rec. Limits %	LCS Qualifier	LCSD Qualifier	RPD %	RPD Limits %
Acenaphthene	0.667	0.578	0.576	86.6	86.4	48.9-107			0.270	20
Acenaphthylene	0.667	0.590	0.589	88.5	88.3	49.2-111			0.190	20
Anthracene	0.667	0.606	0.601	90.8	90.1	52.0-112			0.820	20
Benzidine	0.667	0.100	0.0995	15.1	14.9	0.000-48.0			0.920	40
Benzo(a)anthracene	0.667	0.600	0.625	90.0	93.7	52.3-106			4.10	20
Benzo(b)fluoranthene	0.667	0.599	0.619	89.8	92.8	51.3-106			3.33	20
Benzo(k)fluoranthene	0.667	0.618	0.586	92.6	87.9	52.9-107			5.18	20

Laboratory Control Sample (LCS) • Laboratory Control Sample Duplicate (LCSD)

(LCS) 08/13/15 11:03 • (LCSD) 08/13/15 11:28

Analyte	Spike Amount mg/kg	LCS Result mg/kg	LCSD Result mg/kg	LCS Rec. %	LCSD Rec. %	Rec. Limits %	LCS Qualifier	LCSD Qualifier	RPD %	RPD Limits %
Benzo(g,h,i)perylene	0.667	0.609	0.595	91.4	89.2	45.8-108			2.39	20
Benzo(a)pyrene	0.667	0.619	0.617	92.8	92.5	51.9-106			0.300	20
Bis(2-chlorethoxy)methane	0.667	0.514	0.532	77.1	79.8	44.9-108			3.52	20
Bis(2-chloroethyl)ether	0.667	0.473	0.440	71.0	65.9	32.5-112			7.35	26
Bis(2-chloroisopropyl)ether	0.667	0.498	0.476	74.6	71.4	40.4-99.0			4.43	20.7
4-Bromophenyl-phenylether	0.667	0.596	0.597	89.4	89.5	51.4-110			0.0500	20
2-Chloronaphthalene	0.667	0.591	0.583	88.7	87.4	47.1-105			1.45	20
4-Chlorophenyl-phenylether	0.667	0.568	0.578	85.1	86.7	48.1-108			1.76	20
Chrysene	0.667	0.583	0.589	87.5	88.3	54.4-110			0.950	20
Dibenz(a,h)anthracene	0.667	0.610	0.602	91.4	90.2	45.7-111			1.29	20
3,3-Dichlorobenzidine	0.667	0.543	0.552	81.3	82.7	21.0-101			1.72	22
2,4-Dinitrotoluene	0.667	0.656	0.660	98.3	99.0	53.0-112			0.720	20
2,6-Dinitrotoluene	0.667	0.659	0.660	98.8	98.9	51.6-110			0.130	20
Fluoranthene	0.667	0.594	0.584	89.1	87.6	53.7-110			1.67	20
Fluorene	0.667	0.578	0.579	86.7	86.8	51.1-109			0.150	20
Hexachlorobenzene	0.667	0.572	0.579	85.8	86.7	43.2-104			1.09	20.1
Hexachloro-1,3-butadiene	0.667	0.454	0.439	68.0	65.8	41.5-112			3.35	20
Hexachlorocyclopentadiene	0.667	0.352	0.340	52.7	50.9	13.5-123			3.48	20.7
Hexachloroethane	0.667	0.462	0.405	69.3	60.7	36.2-103			13.3	22.7
Indeno(1,2,3-cd)pyrene	0.667	0.622	0.619	93.3	92.8	47.5-109			0.490	20
Isophorone	0.667	0.618	0.629	92.7	94.4	28.8-104			1.77	20
Naphthalene	0.667	0.469	0.470	70.3	70.5	43.4-103			0.320	20
Nitrobenzene	0.667	0.510	0.504	76.5	75.6	40.7-109			1.22	21
n-Nitrosodimethylamine	0.667	0.491	0.424	73.6	63.6	18.1-122			14.7	23.5
n-Nitrosodiphenylamine	0.667	0.596	0.586	89.3	87.8	48.8-107			1.75	20
n-Nitrosodi-n-propylamine	0.667	0.619	0.591	92.8	88.6	43.3-109			4.59	20
Phenanthrene	0.667	0.581	0.572	87.0	85.8	51.6-107			1.42	20
Benzylbutyl phthalate	0.667	0.657	0.689	98.5	103	47.5-115			4.83	20
Bis(2-ethylhexyl)phthalate	0.667	0.660	0.702	98.9	105	48.1-116			6.21	20.5
Di-n-butyl phthalate	0.667	0.655	0.658	98.3	98.7	49.7-113			0.470	20
Diethyl phthalate	0.667	0.616	0.641	92.3	96.0	52.0-112			3.94	20
Dimethyl phthalate	0.667	0.633	0.634	94.9	95.0	51.4-108			0.110	20
Di-n-octyl phthalate	0.667	0.679	0.702	102	105	49.6-112			3.33	22
Pyrene	0.667	0.603	0.625	90.5	93.7	47.1-108			3.50	20
1,2,4-Trichlorobenzene	0.667	0.441	0.450	66.2	67.4	39.8-100			1.88	20
4-Chloro-3-methylphenol	0.667	0.585	0.598	87.7	89.6	51.1-113			2.23	20

Laboratory Control Sample (LCS) • Laboratory Control Sample Duplicate (LCSD)

(LCS) 08/13/15 11:03 • (LCSD) 08/13/15 11:28

Analyte	Spike Amount mg/kg	LCS Result mg/kg	LCSD Result mg/kg	LCS Rec. %	LCSD Rec. %	Rec. Limits %	LCS Qualifier	LCSD Qualifier	RPD %	RPD Limits %
2-Chlorophenol	0.667	0.500	0.451	74.9	67.7	40.8-103			10.1	20
2,4-Dichlorophenol	0.667	0.545	0.540	81.7	81.0	46.2-109			0.910	20
2,4-Dimethylphenol	0.667	0.573	0.564	85.8	84.6	42.2-110			1.49	20
4,6-Dinitro-2-methylphenol	0.667	0.605	0.610	90.6	91.5	23.1-119			0.900	23.7
2,4-Dinitrophenol	0.667	0.394	0.411	59.0	61.6	10.0-105			4.29	36.5
2-Nitrophenol	0.667	0.562	0.561	84.3	84.2	44.2-113			0.120	20.9
4-Nitrophenol	0.667	0.651	0.671	97.6	101	34.8-109			3.06	20
Pentachlorophenol	0.667	0.484	0.494	72.6	74.1	16.2-102			1.96	22.9
Phenol	0.667	0.541	0.501	81.1	75.2	41.5-106			7.60	20
2,4,6-Trichlorophenol	0.667	0.590	0.605	88.4	90.7	44.4-108			2.60	20
(S) Nitrobenzene-d5				*78.9*	*80.3*	*21.9-129*				
(S) 2-Fluorobiphenyl				*83.1*	*81.2*	*34.9-129*				
(S) p-Terphenyl-d14				*72.5*	*76.5*	*21.5-128*				
(S) Phenol-d5				*79.8*	*74.7*	*26.3-121*				
(S) 2-Fluorophenol				*71.5*	*64.5*	*21.1-116*				
(S) 2,4,6-Tribromophenol				*84.7*	*85.5*	*21.6-142*				

L782157-07 Original Sample (OS) • Matrix Spike (MS) • Matrix Spike Duplicate (MSD)

(OS) 08/13/15 17:15 • (MS) 08/13/15 17:40 • (MSD) 08/13/15 18:05

Analyte	Spike Amount mg/kg	Original Result mg/kg	MS Result mg/kg	MSD Result mg/kg	MS Rec. %	MSD Rec. %	Dilution	Rec. Limits %	MS Qualifier	MSD Qualifier	RPD %	RPD Limits %
Acenaphthene	0.0667	ND	0.605	0.671	90.7	101	10	32.2-134			10.4	27.3
Acenaphthylene	0.0667	0.0835	0.666	0.700	87.3	92.5	10	38.7-129			5.08	25.9
Anthracene	0.0667	0.132	0.638	0.677	76.0	81.8	10	32.3-137			5.87	28.4
Benzidine	0.0667	ND	0.000	0.00560	0.000	0.839	10	0.000-49.9		J3	200	40
Benzo(a)anthracene	0.0667	0.346	0.894	0.893	82.1	82.1	10	33.3-124			0.0600	29
Benzo(b)fluoranthene	0.0667	0.643	1.08	1.03	65.8	58.2	10	23.3-133			4.81	30.3
Benzo(k)fluoranthene	0.0667	0.139	0.729	0.748	88.4	91.4	10	31.0-129			2.70	26.7
Benzo(g,h,i)perylene	0.0667	0.234	0.589	0.600	53.2	54.8	10	10.0-127			1.76	31.9
Benzo(a)pyrene	0.0667	0.339	0.808	0.807	70.3	70.1	10	28.2-128			0.150	28.4
Bis(2-chlorethoxy)methane	0.0667	ND	0.576	0.594	86.3	89.1	10	35.0-132			3.14	26.1
Bis(2-chloroethyl)ether	0.0667	ND	0.605	0.538	90.7	80.6	10	28.8-128			11.8	33.6
Bis(2-chloroisopropyl)ether	0.0667	ND	0.654	0.718	98.0	108	10	31.8-118			9.38	31.7
4-Bromophenyl-phenylether	0.0667	ND	0.619	0.633	92.9	94.9	10	39.0-130			2.22	26
2-Chloronaphthalene	0.0667	ND	0.625	0.684	93.7	103	10	37.5-123			9.00	26.5

L782157-07 Original Sample (OS) • Matrix Spike (MS) • Matrix Spike Duplicate (MSD)

(OS) 08/13/15 17:15 • (MS) 08/13/15 17:40 • (MSD) 08/13/15 18:05

Analyte	Spike Amount mg/kg	Original Result mg/kg	MS Result mg/kg	MSD Result mg/kg	MS Rec. %	MSD Rec. %	Dilution	Rec. Limits %	MS Qualifier	MSD Qualifier	RPD %	RPD Limits %
4-Chlorophenyl-phenylether	0.0667	ND	0.586	0.663	87.8	99.5	10	37.9-123			12.4	25.9
Chrysene	0.0667	0.368	0.884	0.893	77.3	78.7	10	36.3-129			1.08	28
Dibenz(a,h)anthracene	0.0667	0.0590	0.526	0.565	70.0	75.9	10	10.5-128			7.23	29.5
3,3-Dichlorobenzidine	0.0667	ND	0.173	0.146	25.9	22.0	10	10.0-129			16.6	40
2,4-Dinitrotoluene	0.0667	ND	0.413	0.449	61.9	67.3	10	27.8-147			8.33	29.7
2,6-Dinitrotoluene	0.0667	ND	0.429	0.535	64.3	80.2	10	36.5-137			22.0	29.7
Fluoranthene	0.0667	0.570	1.00	0.950	64.6	57.0	10	27.9-138			5.20	26.9
Fluorene	0.0667	ND	0.587	0.619	88.0	92.8	10	34.0-133			5.22	27.1
Hexachlorobenzene	0.0667	ND	0.563	0.688	84.5	103	10	34.4-116			19.8	25.4
Hexachloro-1,3-butadiene	0.0667	ND	0.583	0.566	87.4	84.9	10	36.5-125			2.97	29.7
Hexachlorocyclopentadiene	0.0667	ND	0.0520	0.0679	7.79	10.2	10	10.0-124	J6		26.6	37.5
Hexachloroethane	0.0667	ND	0.431	0.450	64.7	67.5	10	11.3-143			4.28	31.9
Indeno(1,2,3-cd)pyrene	0.0667	0.206	0.607	0.642	60.2	65.4	10	10.0-128			5.55	31.5
Isophorone	0.0667	ND	0.667	0.704	100	105	10	25.7-116			5.27	27.7
Naphthalene	0.0667	0.299	0.909	0.944	91.4	96.7	10	36.4-121			3.81	27.2
Nitrobenzene	0.0667	ND	0.595	0.609	89.2	91.3	10	30.9-134			2.31	27.8
n-Nitrosodimethylamine	0.0667	ND	0.523	0.581	78.5	87.1	10	19.2-127			10.4	32
n-Nitrosodiphenylamine	0.0667	ND	0.459	0.454	68.8	68.1	10	26.8-133			1.01	25.9
n-Nitrosodi-n-propylamine	0.0667	ND	0.645	0.640	96.6	96.0	10	33.0-134			0.660	28.2
Phenanthrene	0.0667	0.513	1.04	1.06	79.4	81.5	10	30.8-137			1.32	26.5
Benzylbutyl phthalate	0.0667	ND	0.718	0.752	108	113	10	33.4-128			4.54	28.5
Bis(2-ethylhexyl)phthalate	0.0667	0.179	0.926	0.912	112	110	10	21.8-141			1.55	35.2
Di-n-butyl phthalate	0.0667	ND	0.682	0.735	102	110	10	32.2-133			7.39	25.9
Diethyl phthalate	0.0667	ND	0.663	0.716	99.3	107	10	39.4-136			7.82	25.5
Dimethyl phthalate	0.0667	ND	0.625	0.654	93.7	98.0	10	35.8-137			4.50	25.4
Di-n-octyl phthalate	0.0667	ND	0.718	0.793	108	119	10	28.5-128			9.91	32.5
Pyrene	0.0667	0.583	1.05	1.01	70.6	64.1	10	24.1-130			4.20	29.9
1,2,4-Trichlorobenzene	0.0667	ND	0.482	0.580	72.2	87.0	10	36.5-114			18.5	28.4
4-Chloro-3-methylphenol	0.0667	ND	0.608	0.706	91.2	106	10	27.0-154			14.9	26.6
2-Chlorophenol	0.0667	ND	0.548	0.579	82.2	86.7	10	33.2-121			5.36	29.3
2,4-Dichlorophenol	0.0667	ND	0.546	0.624	81.9	93.5	10	34.8-134			13.3	27.3
2,4-Dimethylphenol	0.0667	ND	0.344	0.324	51.5	48.6	10	12.3-149			5.91	32.3
4,6-Dinitro-2-methylphenol	0.0667	ND	0.644	0.655	96.5	98.2	10	10.0-144			1.74	32.7
2,4-Dinitrophenol	0.0667	ND	0.761	0.779	114	117	10	10.0-121			2.32	39.4
2-Nitrophenol	0.0667	ND	0.248	0.303	37.2	45.4	10	29.5-144			19.8	29.9
4-Nitrophenol	0.0667	ND	0.460	0.494	69.0	74.1	10	20.0-133			7.08	30.2

L782157-07 Original Sample (OS) • Matrix Spike (MS) • Matrix Spike Duplicate (MSD)

(OS) 08/13/15 17:15 • (MS) 08/13/15 17:40 • (MSD) 08/13/15 18:05

Analyte	Spike Amount mg/kg	Original Result mg/kg	MS Result mg/kg	MSD Result mg/kg	MS Rec. %	MSD Rec. %	Dilution	Rec. Limits %	MS Qualifier	MSD Qualifier	RPD %	RPD Limits %
Pentachlorophenol	0.0667	ND	0.513	0.510	76.9	76.5	10	10.0-139			0.570	28.3
Phenol	0.0667	ND	0.527	0.592	79.0	88.8	10	25.1-130			11.6	29.6
2,4,6-Trichlorophenol	0.0667	ND	0.600	0.633	89.9	94.9	10	33.8-133			5.45	28.1
(S) Nitrobenzene-d5					*97.7*	*84.6*		*21.9-129*				
(S) 2-Fluorobiphenyl					*90.4*	*87.6*		*34.9-129*				
(S) p-Terphenyl-d14					*74.9*	*77.7*		*21.5-128*				
(S) Phenol-d5					*80.3*	*87.8*		*26.3-121*				
(S) 2-Fluorophenol					*78.1*	*78.8*		*21.1-116*				
(S) 2,4,6-Tribromophenol					*80.5*	*104*		*21.6-142*				

Abbreviations and Definitions

SDG	Sample Delivery Group.
MDL	Method Detection Limit.
RDL	Reported Detection Limit.
ND,U	Not detected at the Reporting Limit (or MDL where applicable).
RPD	Relative Percent Difference.
(dry)	Results are reported based on the dry weight of the sample. [this will only be present on a dry report basis for soils].
Original Sample	The non-spiked sample in the prep batch used to determine the Relative Percent Difference (RPD) from a quality control sample. The Original Sample may not be included within the reported SDG.
(S)	Surrogate (Surrogate Standard) - Analytes added to every blank, sample, Laboratory Control Sample/Duplicate and Matrix Spike/Duplicate; used to evaluate analytical efficiency by measuring recovery. Surrogates are not expected to be detected in all environmental media.
Rec.	Recovery.
SDL	Sample Detection Limit.
MQL	Method Quantitation Limit.
Unadj. MQL	Unadjusted Method Quantitation Limit.

Qualifier	Description
J1	Surrogate recovery limits have been exceeded; values are outside upper control limits.
J2	Surrogate recovery limits have been exceeded; values are outside lower control limits.
J3	The associated batch QC was outside the established quality control range for precision.
J4	The associated batch QC was outside the established quality control range for accuracy.
J5	The sample matrix interfered with the ability to make any accurate determination; spike value is high.
J6	The sample matrix interfered with the ability to make any accurate determination; spike value is low.
J7	Surrogate recovery cannot be used for control limit evaluation due to dilution.
V	The sample concentration is too high to evaluate accurate spike recoveries.

ACCREDITATIONS & LOCATIONS

ESC Lab Sciences is the only environmental laboratory accredited/certified to support your work nationwide from one location. One phone call, one point of contact, one laboratory. No other lab is as accessible or prepared to handle your needs throughout the country. Our capacity and capability from our single location laboratory is comparable to the collective totals of the network laboratories in our industry. The most significant benefit to our "one location" design is the design of our laboratory campus. The model is conducive to accelerated productivity, decreasing turn-around time, and preventing cross contamination, thus protecting sample integrity. Our focus on premium quality and prompt service allows us to be **YOUR LAB OF CHOICE.**

State Accreditations

Alabama	40660
Alaska	UST-080
Arizona	AZ0612
Arkansas	88-0469
California	01157CA
Colorado	TN00003
Conneticut	PH-0197
Florida	E87487
Georgia	NELAP
Georgia [1]	923
Idaho	TN00003
Illinois	200008
Indiana	C-TN-01
Iowa	364
Kansas	E-10277
Kentucky [1]	90010
Kentucky [2]	16
Louisiana	AI30792
Maine	TN0002
Maryland	324
Massachusetts	M-TN003
Michigan	9958
Minnesota	047-999-395
Mississippi	TN00003
Missouri	340
Montana	CERT0086
Nebraska	NE-OS-15-05
Nevada	TN-03-2002-34
New Hampshire	2975
New Jersey–NELAP	TN002
New Mexico	TN00003
New York	11742
North Carolina	Env375
North Carolina [1]	DW21704
North Carolina [2]	41
North Dakota	R-140
Ohio–VAP	CL0069
Oklahoma	9915
Oregon	TN200002
Pennsylvania	68-02979
Rhode Island	221
South Carolina	84004
South Dakota	n/a
Tennessee [1 4]	2006
Texas	T 104704245-07-TX
Texas [5]	LAB0152
Utah	6157585858
Vermont	VT2006
Virginia	109
Washington	C1915
West Virginia	233
Wisconsin	9980939910
Wyoming	A2LA

[1.] Drinking Water [2.] Underground Storage Tanks [3.] Aquatic Toxicity [4.] Chemical/Microbiological [5.] Mold [n/a] Accreditation not applicable

Third Party & Federal Accreditations

A2LA – ISO 17025	1461.01
Canada	1461.01
EPA–Crypto	TN00003
AIHA	100789
DOD	1461.01
USDA	S-67674

Our Locations

ESC Lab Sciences has sixty-four client support centers that provide sample pickup and/or the delivery of sampling supplies. If you would like assistance from one of our support offices, please contact our main office. **ESC Lab Sciences performs all testing at our central laboratory.**

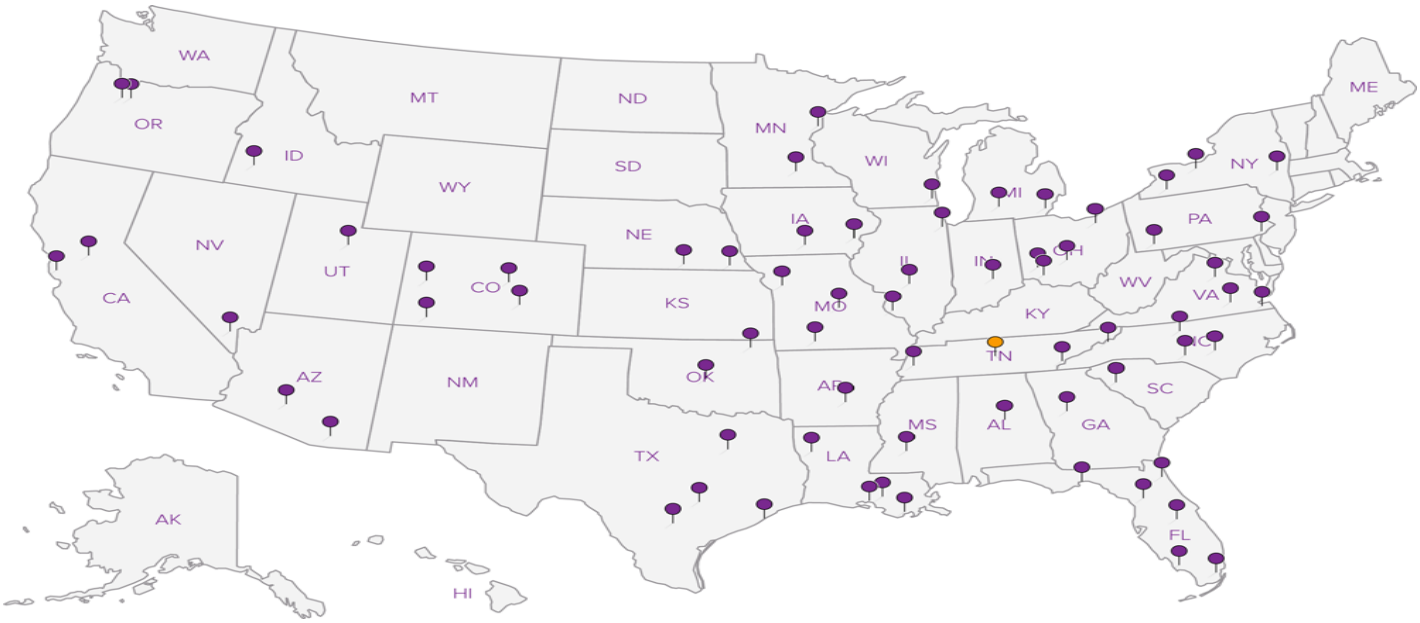

Terracon Consultants - B-Ham AL.

110 12th Street North
Birmingham, AL 35203

Billing Information:
Trey Noland
110 12th Street North
Birmingham, AL 35203

Report to: Trey Noland

Email To: wgnoland@terracon.com

Project Description: Site Investigation

City/State Collected: Moundville, AL

Phone: 205-942-1289
Fax:

Client Project # E1157122

Lab Project # GALLET-E1157122

Collected by (print): Brian Brown

Site/Facility ID # Veros Energy

P.O. # E1157122

Collected by (signature): B B

Immediately Packed on Ice N ___ Y ✓

Rush? (Lab MUST Be Notified)
___ Same Day 200%
___ Next Day 100%
___ Two Day 50%
___ Three Day 25%

Date Results Needed

Email? ___No X__Yes
FAX? ___No ___Yes

Analysis / Container / Preservative

Sample ID	Comp/Grab	Matrix *	Depth	Date	Time	No. of Cntrs	SV8270AP2, MRCRA8 4ozClr-NoPres	V8260, TS 2ozClr-NoPres									Rem./Contaminant	Sample # (lab only)
SB-1 0-1	Grab	SS	—	8/11/15	0858	2	X	X										-01
SB-1 1-3		SS	—		0905	2	X	X										-02
SB-2 0-1		SS	—		09[illegible] 29	2	X	X										-03
SB-2 3-5		SS	—		09[illegible] 34	2	X	X										-04
SB-3 0-1		SS	—		0951	2	X	X										-05
SB-3 3-5		SS	—		0955	2	X	X										-06
SB-4 0-1		SS	—		1026	2	X	X										-07
SB-4 1-3		SS	—		1032	2	X	X										-08
SB-5 0-1		SS	—		1254	2	X	X										-09
SB-5 1-3		SS	—		1301	2	X	X										-10

* Matrix: SS - Soil GW - Groundwater WW - WasteWater DW - Drinking Water OT - Other_____

Remarks: Only 0-1 intervals get a RCRA Metals analysis
6443 1362 5704

pH _____ Temp _____
Flow _____ Other _____

Chain of Custody Page 1 of 3

ESC LAB SCIENCES
YOUR LAB OF CHOICE
12065 Lebanon Rd
Mount Juliet, TN 37122
Phone: 615-758-5858
Phone: 800-767-5859
Fax: 615-758-5859

L # L782221
T G140
Acctnum: GALLET
Template: T104725
Prelogin: P520201
TSR: 350 - Jimmy Hunt
PB: 8/7/15 N26
Shipped Via: FedEX Ground

Hold #

Relinquished by : (Signature)	Date:	Time:	Received by: (Signature)	Samples returned via: ☐ UPS ☐ FedEx ☐ Courier ☐ _____	Condition: (lab use only) GDR
B B	8/11/15	18:00			
Relinquished by : (Signature)	Date:	Time:	Received by: (Signature)	Temp: 3.2 °C Bottles Received: 48	COC Seal Intact: ✓ Y ___N ___NA
Relinquished by : (Signature)	Date:	Time:	Received for lab by: (Signature) Shey Neam	Date: 8-12-15 Time: 900	pH Checked: NCF: X

Terracon Consultants - B-Ham AL.

110 12th Street North
Birmingham, AL 35203

Billing Information:
Trey Noland
110 12th Street North
Birmingham, AL 35203

Report to: Trey Noland

Email To: wgnoland@terracon.com

Project Description: Site Investigation

City/State Collected: Moundville, AL

Phone: 205-942-1289
Fax:

Client Project # E1157122

Lab Project # GALLET-E1157122

Collected by (print): Brian Brown

Site/Facility ID # Veros Energy

P.O. # E1157122

Collected by (signature): [signature]

Immediately Packed on Ice N ___ Y ✓

Rush? (Lab MUST Be Notified)
___ Same Day 200%
___ Next Day 100%
___ Two Day 50%
___ Three Day 25%

Date Results Needed

Email? ___No X__Yes
FAX? ___No ___Yes

Analysis / Container / Preservative

Chain of Custody Page 2 of 3

ESC LAB SCIENCES
YOUR LAB OF CHOICE
12065 Lebanon Rd
Mount Juliet, TN 37122
Phone: 615-758-5858
Phone: 800-767-5859
Fax: 615-758-5859

L# L782271

Table #

Acctnum: GALLET
Template: T104725
Prelogin: P520201
TSR: 350 - Jimmy Hunt
PB: 8/7/15 MG
Shipped Via: FedEX Ground

Sample ID	Comp/Grab	Matrix *	Depth	Date	Time	No. of Cntrs	SV8270AP2, MRCRA8 4ozClr-NoPres	V8260, TS 2ozClr-NoPres								Rem./Contaminant	Sample # (lab only)
SB-6 0-1	Grab	SS	—	8/11/15	1116	2	X	X									-11
SB-6 3-5		SS	—		1122	2	X	X									-12
SB-7 0-1		SS	—		1051	2	X	X									-13
SB-7 1-3		SS	—		1058	2	X	X									-14
SB-8 0-1		SS	—		1319	2	X	X									-15
SB-8 3-5		SS	—		1325	2	X	X									-16
SB-9 0-1		SS	—		1333	2	X	X									-17
SB-9 3-5		SS	—		1341	2	X	X									-18
SB-10 0-1		SS	—		1408	2	X	X									-19
SB-10 3-5		SS	—		1414	2	X	X									-20

* Matrix: SS - Soil GW - Groundwater WW - WasteWater DW - Drinking Water OT - Other_____

Remarks: Only 0-1 intervals get a RCRA Metals analysis

pH _____ Temp _____
Flow _____ Other _____

Hold #

Relinquished by : (Signature)	Date:	Time:	Received by: (Signature)	Samples returned via: ☐ UPS ☐ FedEx ☐ Courier ☐ _____	Condition: (lab use only) GDC
[signature]	8/11/15	18:00			
Relinquished by : (Signature)	Date:	Time:	Received by: (Signature)	Temp: 3.2 °C Bottles Received: 48	COC Seal Intact: ✓ Y ___N ___NA
Relinquished by : (Signature)	Date:	Time:	Received for lab by: (Signature) [signature]	Date: 8-12-15 Time: 900	pH Checked: NCF: X

Terracon Consultants - B-Ham AL.

110 12th Street North
Birmingham, AL 35203

Billing Information:
Trey Noland
110 12th Street North
Birmingham, AL 35203

Report to: Trey Noland

Email To: wgnoland@terracon.com

Project Description: Site Investigation

City/State Collected: Moundville, AL

Phone: 205-942-1289
Fax:

Client Project # E1157122

Lab Project # GALLET-E1157122

Collected by (print): Brian Brown

Site/Facility ID # Veros Energy

P.O. # E1157122

Collected by (signature): [signature]

Immediately Packed on Ice N ___ Y ✓

Rush? (Lab MUST Be Notified)
___ Same Day 200%
___ Next Day 100%
___ Two Day 50%
___ Three Day 25%

Date Results Needed

Email? ___No X__Yes
FAX? ___No ___Yes

Analysis / Container / Preservative

Chain of Custody Page ___ of ___

ESC LAB SCIENCES
YOUR LAB OF CHOICE
12065 Lebanon Rd
Mount Juliet, TN 37122
Phone: 615-758-5858
Phone: 800-767-5859
Fax: 615-758-5859

L # L782271

Table #

Acctnum: GALLET
Template: T104725
Prelogin: P520201
TSR: 350 - Jimmy Hunt
PB: 8/7/15 NLB
Shipped Via: FedEX Ground

Sample ID	Comp/Grab	Matrix *	Depth	Date	Time	No. of Cntrs	SV8270AP2, MRCRA8 4ozClr-NoPres	V8260, TS 2ozClr-NoPres								Rem./Contaminant	Sample # (lab only)
SB-11 0-1	Grab	SS	—	8/11/15	1430	2	X	X									-21
SB-11 3-5	↓	SS	—	↓	1438	2	X	X									-22
SB-12 0-1	↓	SS	—	↓	1500	2	X	X									-23
SB-12 3-5	↓	SS	—	↓	1506	2	X	X									-24
		SS				~~2~~	~~X~~	~~X~~									
		SS				~~2~~	~~X~~	~~X~~									
		SS				~~2~~	~~X~~	~~X~~									
		SS				~~2~~	~~X~~	~~X~~									
		SS				~~2~~	~~X~~	~~X~~									
		SS				~~2~~	~~X~~	~~X~~									

* Matrix: SS - Soil GW - Groundwater WW - WasteWater DW - Drinking Water OT - Other_____

Remarks: Only 0-1 intervals get a RCRA M analysis

pH _____ Temp _____
Flow _____ Other _____

Hold #

Relinquished by : (Signature)	Date:	Time:	Received by: (Signature)
[signature]	8/11/15	18:00	
Relinquished by : (Signature)	Date:	Time:	Received by: (Signature)
Relinquished by : (Signature)	Date:	Time:	Received for lab by: (Signature)
			[signature]

Samples returned via: ☐ UPS ☐ FedEx ☐ Courier ☐ _____

Temp: 3.2 °C Bottles Received: 48

Date: 8-12-15 Time: 900

Condition: (lab use only) GD12

COC Seal Intact: ___Y ___N ___NA

pH Checked: NCF: X

ESC Lab Sciences
Non-Conformance Form

Login #: L782221	Client: GALLET	Date: 8/12/15	Evaluated by: Greg Dearmon

Non-Conformance (check applicable items)

	Sample Integrity		Chain of Custody Clarification		
	Parameter(s) past holding time		Login Clarification Needed		**If Broken Container:**
	Improper temperature		Chain of custody is incomplete		Insufficient packing material around container
	Improper container type		Please specify Metals requested.		Insufficient packing material inside cooler
	Improper preservation		Please specify TCLP requested.		Improper handling by carrier (FedEx / UPS / Courie
	Insufficient sample volume.		Received additional samples not listed on coc.		Sample was frozen
	Sample is biphasic.	X	Sample ids on containers do not match ids on coc		Container lid not intact
	Vials received with headspace.		Trip Blank not received.		**If no Chain of Custody:**
	Broken container		Client did not "X" analysis.		Received by:
	Broken container:		Chain of Custody is missing		Date/Time:
	Sufficient sample remains				Temp./Cont. Rec./pH:
					Carrier:
					Tracking#

Login Comments: Did not receive SB-2 (0-1FT) at 0929. Did receive SB-1 (0-1FT) at 0929 not on the COC. Logged by COC.

Client informed by:		Call		Email	x	Voice Mail		Date: 8/12/15	Time: 1350
TSR Initials: jeh	Client Contact: Trey Noland								

Login Instructions: Log by the COC.

This E-mail and any attached files are confidential, and may be copyright protected. If you are not the addressee, any dissemination of this communication is strictly prohibited. If you have received this message in error, please contact the sender immediately and delete/destroy all information received.

L782221

Jimmy Hunt

From: Noland III, Trey G <Trey.Noland@terracon.com>
Sent: Wednesday, August 12, 2015 9:23 AM
To: Jimmy Hunt
Subject: Large rush job should be received today and tomorrow.
Attachments: SKM_C554e15081209160.pdf

Jimmy,

The attached samples should arrive today. We need these results by **COB Friday**. The rush was NOT noted on the chain.

The remainder of the samples should arrive tomorrow. They will also need a 2 day turn.

A couple things of note:

Only samples collected from the 0-1 foot interval should be analyzed for RCRA metals. This was noted in the remarks section on the chain.

Please be sure to report **dicyclopentadiene** when reporting VOCs. This was NOT noted on the chain. Thanks.

Trey G. Noland, P.G.
Project Geologist

Terracon
110 12th Street N I Birmingham, AL 35203
P (205) 942-1289 I F (205) 443-5302 I M (205) 441-5005
wgnoland@terracon.com I www.terracon.com

Terracon provides environmental, facilities, geotechnical, and materials consulting engineering services delivered with responsiveness, resourcefulness, and reliability.

Private and confidential as detailed here (www.terracon.com/disclaimer). If you cannot access hyperlink, please e-mail sender.

L782221

Jimmy Hunt

From: Brown, Brian B <Brian.Brown@terracon.com>
Sent: Wednesday, August 12, 2015 3:10 PM
To: Jimmy Hunt
Subject: RE: Veros Energy

Also, the SVOC analysis should just be the standard SVOC 8270, not the Ap II.

From: Jimmy Hunt [mailto:JHunt@esclabsciences.com]
Sent: Wednesday, August 12, 2015 1:52 PM
To: Noland III, Trey G; Brown, Brian B
Subject: Veros Energy

Trey/Brian,
The attached COC lists SB-2 @ 0-1FT collected at 0929. We did not receive a sample with that label, but we received SB-1 @ 0-1FT collected at 0929. We logged that SB-1 sample as SB-2 per the COC. Please let me know if that is not correct.

Thanks,

Jimmy Hunt
Technical Service Representative
Phone: 615-773-9668
Toll Free: 1-800-767-5859 ext:9668
Email: jhunt@esclabsciences.com

This E-mail and any attached files are confidential, and may be copyright protected. If you are not the addressee, any dissemination of this communication is strictly prohibited. If you have received this message in error, please contact the sender immediately and delete/destroy all information received.

Notice: This communication and any attached files may contain privileged or other confidential information. If you have received this in error, please contact the sender immediately via reply email and immediately delete the message and any attachments without copying or disclosing the contents. Thank you.

Terracon provides environmental, facilities, geotechnical, and materials consulting engineering services delivered with responsiveness, resourcefulness, and reliability.

Private and confidential as detailed here (www.terracon.com/disclaimer). If you cannot access hyperlink, please e-mail sender.

ANALYTICAL REPORT

August 17, 2015

Terracon Consultants - B-Ham AL.

Sample Delivery Group:	L782656
Samples Received:	08/13/2015
Project Number:	E1157122
Description:	Site Investigation
Site:	Veros Energy
Report To:	Trey Noland 110 12th Street North Birmingham, AL 35203

Entire Report Reviewed By:

Jimmy Hunt
Technical Service Representative

Results relate only to the items tested or calibrated and are reported as rounded values. This test report shall not be reproduced, except in full, without written approval of the laboratory. Where applicable, sampling conducted by ESC is performed per guidance provided in laboratory standard operating procedures: 060302, 060303, and 060304.

TABLE OF CONTENTS

[1]Cp: Cover Page 1

[2]Tc: Table of Contents 2

[3]Ss: Sample Summary 3

[4]Cn: Case Narrative 6

[5]Sr: Sample Results 7

SB-13 0-1 FT L782656-01 7

SB-13 3-5 FT L782656-02 10

SB-14 0-1 FT L782656-03 13

SB-14 1-3 FT L782656-04 16

SB-15 0-1 FT L782656-05 19

SB-15 3-5 FT L782656-06 22

SB-16 0-1 FT L782656-07 25

SB-16 1-3 FT L782656-08 28

HA-1 0-1 FT L782656-09 31

HA-1 1-3 FT L782656-10 34

HA-2 0-1 FT L782656-11 37

HA-2 3-5 FT L782656-12 40

HA-3 0-1 FT L782656-13 43

HA-3 3-5 FT L782656-14 46

HA-4 0-1 FT L782656-15 49

HA-4 3-5 FT L782656-16 52

[6]Qc: Quality Control Summary 55

Total Solids by Method 2540 G-2011 55

Mercury by Method 7471A 57

Metals (ICP) by Method 6010B 58

Volatile Organic Compounds (GC/MS) by Method 8260B 59

Semi Volatile Organic Compounds (GC/MS) by Method 8270C 76

[7]Gl: Glossary of Terms 80

[8]Al: Accreditations & Locations 81

[9]Sc: Chain of Custody 82

1 Cp
2 Tc
3 Ss
4 Cn
5 Sr
6 Qc
7 Gl
8 Al
9 Sc

SB-13 0-1 FT L782656-01 Solid

Collected by: Brian Brown | Collected date/time: 08/12/15 09:11 | Received date/time: 08/13/15 09:00

Method	Batch	Dilution	Preparation date/time	Analysis date/time	Analysis Analyst
Mercury by Method 7471A	WG809114	1	08/14/15 09:20	08/15/15 10:03	BRJ
Metals (ICP) by Method 6010B	WG809022	1	08/14/15 10:31	08/14/15 16:12	WBD
Semi Volatile Organic Compounds (GC/MS) by Method 8270C	WG809054	1	08/14/15 21:18	08/17/15 11:56	KMF
Total Solids by Method 2540 G-2011	WG809040	1	08/14/15 14:56	08/15/15 08:43	KDW
Volatile Organic Compounds (GC/MS) by Method 8260B	WG809075	5	08/13/15 22:14	08/16/15 10:30	KLO

SB-13 3-5 FT L782656-02 Solid

Collected by: Brian Brown | Collected date/time: 08/12/15 09:18 | Received date/time: 08/13/15 09:00

Method	Batch	Dilution	Preparation date/time	Analysis date/time	Analysis Analyst
Semi Volatile Organic Compounds (GC/MS) by Method 8270C	WG809054	1	08/14/15 21:18	08/17/15 12:20	KMF
Total Solids by Method 2540 G-2011	WG809040	1	08/14/15 14:56	08/15/15 08:43	KDW
Volatile Organic Compounds (GC/MS) by Method 8260B	WG809075	5	08/13/15 22:14	08/16/15 10:50	KLO

SB-14 0-1 FT L782656-03 Solid

Collected by: Brian Brown | Collected date/time: 08/12/15 09:40 | Received date/time: 08/13/15 09:00

Method	Batch	Dilution	Preparation date/time	Analysis date/time	Analysis Analyst
Mercury by Method 7471A	WG809114	1	08/14/15 09:20	08/15/15 10:06	BRJ
Metals (ICP) by Method 6010B	WG809022	1	08/14/15 10:31	08/14/15 16:22	WBD
Semi Volatile Organic Compounds (GC/MS) by Method 8270C	WG809054	1	08/14/15 21:18	08/17/15 12:45	KMF
Total Solids by Method 2540 G-2011	WG809040	1	08/14/15 14:56	08/15/15 08:44	KDW
Volatile Organic Compounds (GC/MS) by Method 8260B	WG809075	5	08/13/15 22:14	08/16/15 05:22	KLO

SB-14 1-3 FT L782656-04 Solid

Collected by: Brian Brown | Collected date/time: 08/12/15 09:44 | Received date/time: 08/13/15 09:00

Method	Batch	Dilution	Preparation date/time	Analysis date/time	Analysis Analyst
Semi Volatile Organic Compounds (GC/MS) by Method 8270C	WG809054	1	08/14/15 21:18	08/17/15 13:10	KMF
Semi Volatile Organic Compounds (GC/MS) by Method 8270C	WG809054	20	08/14/15 21:18	08/17/15 15:14	KMF
Total Solids by Method 2540 G-2011	WG809040	1	08/14/15 14:56	08/15/15 08:44	KDW
Volatile Organic Compounds (GC/MS) by Method 8260B	WG809612	25	08/17/15 08:32	08/17/15 12:27	KLO

SB-15 0-1 FT L782656-05 Solid

Collected by: Brian Brown | Collected date/time: 08/12/15 09:59 | Received date/time: 08/13/15 09:00

Method	Batch	Dilution	Preparation date/time	Analysis date/time	Analysis Analyst
Mercury by Method 7471A	WG809114	1	08/14/15 09:20	08/15/15 10:08	BRJ
Metals (ICP) by Method 6010B	WG809022	1	08/14/15 10:31	08/14/15 16:25	WBD
Semi Volatile Organic Compounds (GC/MS) by Method 8270C	WG809054	1	08/14/15 21:18	08/17/15 13:35	KMF
Total Solids by Method 2540 G-2011	WG809040	1	08/14/15 14:56	08/15/15 08:44	KDW
Volatile Organic Compounds (GC/MS) by Method 8260B	WG809075	5	08/13/15 22:14	08/16/15 11:28	KLO

SB-15 3-5 FT L782656-06 Solid

Collected by: Brian Brown | Collected date/time: 08/12/15 10:05 | Received date/time: 08/13/15 09:00

Method	Batch	Dilution	Preparation date/time	Analysis date/time	Analysis Analyst
Semi Volatile Organic Compounds (GC/MS) by Method 8270C	WG809054	1	08/14/15 21:18	08/17/15 14:00	KMF
Total Solids by Method 2540 G-2011	WG809040	1	08/14/15 14:56	08/15/15 08:44	KDW
Volatile Organic Compounds (GC/MS) by Method 8260B	WG809088	5	08/13/15 23:50	08/14/15 16:21	MCB

SB-16 0-1 FT L782656-07 Solid

Collected by: Brian Brown | Collected date/time: 08/12/15 10:19 | Received date/time: 08/13/15 09:00

Method	Batch	Dilution	Preparation date/time	Analysis date/time	Analysis Analyst
Mercury by Method 7471A	WG809114	1	08/14/15 09:20	08/15/15 10:11	BRJ
Metals (ICP) by Method 6010B	WG809022	1	08/14/15 10:31	08/14/15 16:28	WBD
Semi Volatile Organic Compounds (GC/MS) by Method 8270C	WG809054	10	08/14/15 21:18	08/17/15 16:03	KMF
Total Solids by Method 2540 G-2011	WG809040	1	08/14/15 14:56	08/15/15 08:45	KDW
Volatile Organic Compounds (GC/MS) by Method 8260B	WG809088	5	08/13/15 23:50	08/14/15 16:44	MCB

SB-16 1-3 FT L782656-08 Solid

Collected by: Brian Brown | Collected date/time: 08/12/15 10:27 | Received date/time: 08/13/15 09:00

Method	Batch	Dilution	Preparation date/time	Analysis date/time	Analysis Analyst
Semi Volatile Organic Compounds (GC/MS) by Method 8270C	WG809054	1	08/14/15 21:18	08/17/15 14:24	KMF
Total Solids by Method 2540 G-2011	WG809040	1	08/14/15 14:56	08/15/15 08:45	KDW
Volatile Organic Compounds (GC/MS) by Method 8260B	WG809088	5	08/13/15 23:50	08/14/15 17:07	MCB

HA-1 0-1 FT L782656-09 Solid

Collected by: Brian Brown | Collected date/time: 08/12/15 11:10 | Received date/time: 08/13/15 09:00

Method	Batch	Dilution	Preparation date/time	Analysis date/time	Analysis Analyst
Mercury by Method 7471A	WG809114	1	08/14/15 09:20	08/15/15 10:13	BRJ
Metals (ICP) by Method 6010B	WG809022	1	08/14/15 10:31	08/14/15 16:31	WBD
Semi Volatile Organic Compounds (GC/MS) by Method 8270C	WG809054	1	08/14/15 21:18	08/17/15 14:49	KMF
Total Solids by Method 2540 G-2011	WG809040	1	08/14/15 14:56	08/15/15 08:46	KDW
Volatile Organic Compounds (GC/MS) by Method 8260B	WG809088	5	08/13/15 23:50	08/14/15 17:31	MCB

HA-1 1-3 FT L782656-10 Solid

Collected by: Brian Brown | Collected date/time: 08/12/15 11:19 | Received date/time: 08/13/15 09:00

Method	Batch	Dilution	Preparation date/time	Analysis date/time	Analysis Analyst
Semi Volatile Organic Compounds (GC/MS) by Method 8270C	WG809054	1	08/14/15 21:18	08/17/15 12:10	KMF
Total Solids by Method 2540 G-2011	WG809040	1	08/14/15 14:56	08/15/15 08:46	KDW
Volatile Organic Compounds (GC/MS) by Method 8260B	WG809088	5	08/13/15 23:50	08/14/15 17:54	MCB

HA-2 0-1 FT L782656-11 Solid

Collected by: Brian Brown | Collected date/time: 08/12/15 11:37 | Received date/time: 08/13/15 09:00

Method	Batch	Dilution	Preparation date/time	Analysis date/time	Analysis Analyst
Mercury by Method 7471A	WG809114	1	08/14/15 09:20	08/15/15 10:16	BRJ
Metals (ICP) by Method 6010B	WG809022	1	08/14/15 10:31	08/14/15 16:34	WBD
Semi Volatile Organic Compounds (GC/MS) by Method 8270C	WG809054	10	08/14/15 21:18	08/17/15 14:45	KMF
Semi Volatile Organic Compounds (GC/MS) by Method 8270C	WG809054	50	08/14/15 21:18	08/17/15 16:28	KMF
Total Solids by Method 2540 G-2011	WG809041	1	08/14/15 16:56	08/15/15 09:26	KDW
Volatile Organic Compounds (GC/MS) by Method 8260B	WG809088	5	08/13/15 23:50	08/14/15 18:17	MCB

HA-2 3-5 FT L782656-12 Solid

Collected by: Brian Brown | Collected date/time: 08/12/15 11:41 | Received date/time: 08/13/15 09:00

Method	Batch	Dilution	Preparation date/time	Analysis date/time	Analysis Analyst
Semi Volatile Organic Compounds (GC/MS) by Method 8270C	WG809054	1	08/14/15 21:18	08/17/15 12:34	KMF
Semi Volatile Organic Compounds (GC/MS) by Method 8270C	WG809054	100	08/14/15 21:18	08/17/15 16:53	KMF
Semi Volatile Organic Compounds (GC/MS) by Method 8270C	WG809054	20	08/14/15 21:18	08/17/15 15:32	KMF
Total Solids by Method 2540 G-2011	WG809041	1	08/14/15 16:56	08/15/15 09:26	KDW

1 Cp
2 Tc
3 Ss
4 Cn
5 Sr
6 Qc
7 Gl
8 Al
9 Sc

HA-2 3-5 FT L782656-12 Solid

Collected by: Brian Brown | Collected date/time: 08/12/15 11:41 | Received date/time: 08/13/15 09:00

Method	Batch	Dilution	Preparation date/time	Analysis date/time	Analysis Analyst
Volatile Organic Compounds (GC/MS) by Method 8260B	WG809088	500	08/13/15 23:50	08/14/15 18:40	MCB
Volatile Organic Compounds (GC/MS) by Method 8260B	WG809095	10000	08/17/15 08:38	08/17/15 13:25	MCB

HA-3 0-1 FT L782656-13 Solid

Collected by: Brian Brown | Collected date/time: 08/12/15 11:50 | Received date/time: 08/13/15 09:00

Method	Batch	Dilution	Preparation date/time	Analysis date/time	Analysis Analyst
Mercury by Method 7471A	WG809114	1	08/14/15 09:20	08/15/15 10:19	BRJ
Metals (ICP) by Method 6010B	WG809022	1	08/14/15 10:31	08/14/15 16:37	WBD
Semi Volatile Organic Compounds (GC/MS) by Method 8270C	WG809054	1	08/14/15 21:18	08/17/15 12:57	KMF
Total Solids by Method 2540 G-2011	WG809041	1	08/14/15 16:56	08/15/15 09:26	KDW
Volatile Organic Compounds (GC/MS) by Method 8260B	WG809088	5	08/13/15 23:50	08/14/15 19:03	MCB
Volatile Organic Compounds (GC/MS) by Method 8260B	WG809095	5	08/17/15 08:38	08/17/15 13:46	MCB

HA-3 3-5 FT L782656-14 Solid

Collected by: Brian Brown | Collected date/time: 08/12/15 11:55 | Received date/time: 08/13/15 09:00

Method	Batch	Dilution	Preparation date/time	Analysis date/time	Analysis Analyst
Semi Volatile Organic Compounds (GC/MS) by Method 8270C	WG809054	1	08/14/15 21:18	08/17/15 13:20	KMF
Semi Volatile Organic Compounds (GC/MS) by Method 8270C	WG809054	100	08/14/15 21:18	08/17/15 17:16	KMF
Semi Volatile Organic Compounds (GC/MS) by Method 8270C	WG809054	20	08/14/15 21:18	08/17/15 15:55	KMF
Total Solids by Method 2540 G-2011	WG809041	1	08/14/15 16:56	08/15/15 09:27	KDW
Volatile Organic Compounds (GC/MS) by Method 8260B	WG809088	500	08/13/15 23:50	08/14/15 19:26	MCB
Volatile Organic Compounds (GC/MS) by Method 8260B	WG809612	10000	08/17/15 08:32	08/17/15 12:46	KLO

HA-4 0-1 FT L782656-15 Solid

Collected by: Brian Brown | Collected date/time: 08/12/15 12:12 | Received date/time: 08/13/15 09:00

Method	Batch	Dilution	Preparation date/time	Analysis date/time	Analysis Analyst
Mercury by Method 7471A	WG809114	1	08/14/15 09:20	08/15/15 10:21	BRJ
Metals (ICP) by Method 6010B	WG809022	1	08/14/15 10:31	08/14/15 16:40	WBD
Semi Volatile Organic Compounds (GC/MS) by Method 8270C	WG809054	10	08/14/15 21:18	08/17/15 15:09	KMF
Semi Volatile Organic Compounds (GC/MS) by Method 8270C	WG809054	20	08/14/15 21:18	08/17/15 16:53	KMF
Total Solids by Method 2540 G-2011	WG809041	1	08/14/15 16:56	08/15/15 09:28	KDW
Volatile Organic Compounds (GC/MS) by Method 8260B	WG809088	5	08/13/15 23:50	08/14/15 19:49	MCB
Volatile Organic Compounds (GC/MS) by Method 8260B	WG809095	5	08/17/15 08:38	08/17/15 14:07	MCB

HA-4 3-5 FT L782656-16 Solid

Collected by: Brian Brown | Collected date/time: 08/12/15 12:18 | Received date/time: 08/13/15 09:00

Method	Batch	Dilution	Preparation date/time	Analysis date/time	Analysis Analyst
Semi Volatile Organic Compounds (GC/MS) by Method 8270C	WG809054	1	08/14/15 21:18	08/17/15 13:43	KMF
Semi Volatile Organic Compounds (GC/MS) by Method 8270C	WG809054	100	08/14/15 21:18	08/17/15 17:18	KMF
Semi Volatile Organic Compounds (GC/MS) by Method 8270C	WG809054	20	08/14/15 21:18	08/17/15 15:39	KMF
Total Solids by Method 2540 G-2011	WG809041	1	08/14/15 16:56	08/15/15 09:29	KDW
Volatile Organic Compounds (GC/MS) by Method 8260B	WG809088	500	08/13/15 23:50	08/14/15 20:12	MCB
Volatile Organic Compounds (GC/MS) by Method 8260B	WG809612	10000	08/17/15 08:32	08/17/15 13:05	KLO

1 Cp
2 Tc
3 Ss
4 Cn
5 Sr
6 Qc
7 Gl
8 Al
9 Sc

All sample aliquots were received at the correct temperature, in the proper containers, with the appropriate preservatives, and within method specified holding times. All MDL (LOD) and RL (LOQ) values reported for environmental samples have been corrected for the dilution factor used in the analysis. All Method and Batch Quality Control are within established criteria except where addressed in this case narrative, a non-conformance form or properly qualified within the sample results. By my digital signature below, I affirm to the best of my knowledge, all problems/anomalies observed by the laboratory as having the potential to affect the quality of the data have been identified by the laboratory, and no information or data have been knowingly withheld that would affect the quality of the

Jimmy Hunt

Jimmy Hunt
Technical Service Representative

Total Solids by Method 2540 G-2011

Analyte	Result %	Qualifier	Dilution	Analysis date / time	Batch
Total Solids	93.7		1	08/15/2015 08:43	WG809040

Mercury by Method 7471A

Analyte	Result (dry) mg/kg	Qualifier	RDL (dry) mg/kg	Dilution	Analysis date / time	Batch
Mercury	ND		0.0213	1	08/15/2015 10:03	WG809114

Metals (ICP) by Method 6010B

Analyte	Result (dry) mg/kg	Qualifier	RDL (dry) mg/kg	Dilution	Analysis date / time	Batch
Arsenic	5.15		2.13	1	08/14/2015 16:12	WG809022
Barium	18.5		0.533	1	08/14/2015 16:12	WG809022
Cadmium	ND		0.533	1	08/14/2015 16:12	WG809022
Chromium	11.9		1.07	1	08/14/2015 16:12	WG809022
Lead	5.35		0.533	1	08/14/2015 16:12	WG809022
Selenium	ND		2.13	1	08/14/2015 16:12	WG809022
Silver	ND		1.07	1	08/14/2015 16:12	WG809022

Volatile Organic Compounds (GC/MS) by Method 8260B

Analyte	Result (dry) mg/kg	Qualifier	RDL (dry) mg/kg	Dilution	Analysis date / time	Batch
Acetone	ND		0.267	5	08/16/2015 10:30	WG809075
Acrylonitrile	ND		0.0533	5	08/16/2015 10:30	WG809075
Benzene	ND		0.00533	5	08/16/2015 10:30	WG809075
Bromobenzene	ND		0.00533	5	08/16/2015 10:30	WG809075
Bromodichloromethane	ND		0.00533	5	08/16/2015 10:30	WG809075
Bromoform	ND		0.00533	5	08/16/2015 10:30	WG809075
Bromomethane	ND		0.0267	5	08/16/2015 10:30	WG809075
n-Butylbenzene	ND		0.00533	5	08/16/2015 10:30	WG809075
sec-Butylbenzene	ND		0.00533	5	08/16/2015 10:30	WG809075
tert-Butylbenzene	ND		0.00533	5	08/16/2015 10:30	WG809075
Carbon tetrachloride	ND		0.00533	5	08/16/2015 10:30	WG809075
Chlorobenzene	ND		0.00533	5	08/16/2015 10:30	WG809075
Chlorodibromomethane	ND		0.00533	5	08/16/2015 10:30	WG809075
Chloroethane	ND		0.0267	5	08/16/2015 10:30	WG809075
2-Chloroethyl vinyl ether	ND		0.267	5	08/16/2015 10:30	WG809075
Chloroform	ND		0.0267	5	08/16/2015 10:30	WG809075
Chloromethane	ND		0.0133	5	08/16/2015 10:30	WG809075
2-Chlorotoluene	ND		0.00533	5	08/16/2015 10:30	WG809075
4-Chlorotoluene	ND		0.00533	5	08/16/2015 10:30	WG809075
1,2-Dibromo-3-Chloropropane	ND		0.0267	5	08/16/2015 10:30	WG809075
1,2-Dibromoethane	ND		0.00533	5	08/16/2015 10:30	WG809075
Dibromomethane	ND		0.00533	5	08/16/2015 10:30	WG809075
1,2-Dichlorobenzene	ND		0.00533	5	08/16/2015 10:30	WG809075
1,3-Dichlorobenzene	ND		0.00533	5	08/16/2015 10:30	WG809075
1,4-Dichlorobenzene	ND		0.00533	5	08/16/2015 10:30	WG809075
Dichlorodifluoromethane	ND		0.0267	5	08/16/2015 10:30	WG809075
1,1-Dichloroethane	ND		0.00533	5	08/16/2015 10:30	WG809075
1,2-Dichloroethane	ND		0.00533	5	08/16/2015 10:30	WG809075
1,1-Dichloroethene	ND		0.00533	5	08/16/2015 10:30	WG809075
cis-1,2-Dichloroethene	ND		0.00533	5	08/16/2015 10:30	WG809075
trans-1,2-Dichloroethene	ND		0.00533	5	08/16/2015 10:30	WG809075
1,2-Dichloropropane	ND		0.00533	5	08/16/2015 10:30	WG809075
1,1-Dichloropropene	ND		0.00533	5	08/16/2015 10:30	WG809075

Volatile Organic Compounds (GC/MS) by Method 8260B

Analyte	Result (dry) mg/kg	Qualifier	RDL (dry) mg/kg	Dilution	Analysis date / time	Batch
1,3-Dichloropropane	ND		0.00533	5	08/16/2015 10:30	WG809075
cis-1,3-Dichloropropene	ND		0.00533	5	08/16/2015 10:30	WG809075
trans-1,3-Dichloropropene	ND		0.00533	5	08/16/2015 10:30	WG809075
2,2-Dichloropropane	ND		0.00533	5	08/16/2015 10:30	WG809075
Dicyclopentadiene	ND		0.00533	5	08/16/2015 10:30	WG809075
Di-isopropyl ether	ND		0.00533	5	08/16/2015 10:30	WG809075
Ethylbenzene	ND		0.00533	5	08/16/2015 10:30	WG809075
Hexachloro-1,3-butadiene	ND		0.00533	5	08/16/2015 10:30	WG809075
Isopropylbenzene	ND		0.00533	5	08/16/2015 10:30	WG809075
p-Isopropyltoluene	ND		0.00533	5	08/16/2015 10:30	WG809075
2-Butanone (MEK)	ND		0.0533	5	08/16/2015 10:30	WG809075
Methylene Chloride	ND		0.0267	5	08/16/2015 10:30	WG809075
4-Methyl-2-pentanone (MIBK)	ND		0.0533	5	08/16/2015 10:30	WG809075
Methyl tert-butyl ether	ND		0.00533	5	08/16/2015 10:30	WG809075
Naphthalene	ND		0.0267	5	08/16/2015 10:30	WG809075
n-Propylbenzene	ND		0.00533	5	08/16/2015 10:30	WG809075
Styrene	ND		0.00533	5	08/16/2015 10:30	WG809075
1,1,1,2-Tetrachloroethane	ND		0.00533	5	08/16/2015 10:30	WG809075
1,1,2,2-Tetrachloroethane	ND		0.00533	5	08/16/2015 10:30	WG809075
1,1,2-Trichlorotrifluoroethane	ND		0.00533	5	08/16/2015 10:30	WG809075
Tetrachloroethene	ND		0.00533	5	08/16/2015 10:30	WG809075
Toluene	ND		0.0267	5	08/16/2015 10:30	WG809075
1,2,3-Trichlorobenzene	ND		0.00533	5	08/16/2015 10:30	WG809075
1,2,4-Trichlorobenzene	ND		0.00533	5	08/16/2015 10:30	WG809075
1,1,1-Trichloroethane	ND		0.00533	5	08/16/2015 10:30	WG809075
1,1,2-Trichloroethane	ND		0.00533	5	08/16/2015 10:30	WG809075
Trichloroethene	ND		0.00533	5	08/16/2015 10:30	WG809075
Trichlorofluoromethane	ND		0.0267	5	08/16/2015 10:30	WG809075
1,2,3-Trichloropropane	ND		0.0133	5	08/16/2015 10:30	WG809075
1,2,4-Trimethylbenzene	ND		0.00533	5	08/16/2015 10:30	WG809075
1,2,3-Trimethylbenzene	ND		0.00533	5	08/16/2015 10:30	WG809075
1,3,5-Trimethylbenzene	ND		0.00533	5	08/16/2015 10:30	WG809075
Vinyl chloride	ND		0.00533	5	08/16/2015 10:30	WG809075
Xylenes, Total	ND		0.0160	5	08/16/2015 10:30	WG809075
(S) Toluene-d8	*98.3*		*88.7-115*		*08/16/2015 10:30*	WG809075
(S) Dibromofluoromethane	*97.6*		*76.3-123*		*08/16/2015 10:30*	WG809075
(S) 4-Bromofluorobenzene	*97.0*		*69.7-129*		*08/16/2015 10:30*	WG809075

Semi Volatile Organic Compounds (GC/MS) by Method 8270C

Analyte	Result (dry) mg/kg	Qualifier	RDL (dry) mg/kg	Dilution	Analysis date / time	Batch
Acenaphthene	ND		0.0352	1	08/17/2015 11:56	WG809054
Acenaphthylene	ND		0.0352	1	08/17/2015 11:56	WG809054
Anthracene	ND		0.0352	1	08/17/2015 11:56	WG809054
Benzidine	ND		0.355	1	08/17/2015 11:56	WG809054
Benzo(a)anthracene	ND		0.0352	1	08/17/2015 11:56	WG809054
Benzo(b)fluoranthene	ND		0.0352	1	08/17/2015 11:56	WG809054
Benzo(k)fluoranthene	ND		0.0352	1	08/17/2015 11:56	WG809054
Benzo(g,h,i)perylene	ND		0.0352	1	08/17/2015 11:56	WG809054
Benzo(a)pyrene	ND		0.0352	1	08/17/2015 11:56	WG809054
Bis(2-chlorethoxy)methane	ND		0.355	1	08/17/2015 11:56	WG809054
Bis(2-chloroethyl)ether	ND		0.355	1	08/17/2015 11:56	WG809054
Bis(2-chloroisopropyl)ether	ND		0.355	1	08/17/2015 11:56	WG809054
4-Bromophenyl-phenylether	ND		0.355	1	08/17/2015 11:56	WG809054
2-Chloronaphthalene	ND		0.0352	1	08/17/2015 11:56	WG809054
4-Chlorophenyl-phenylether	ND		0.355	1	08/17/2015 11:56	WG809054

Semi Volatile Organic Compounds (GC/MS) by Method 8270C

Analyte	Result (dry) mg/kg	Qualifier	RDL (dry) mg/kg	Dilution	Analysis date / time	Batch
Chrysene	ND		0.0352	1	08/17/2015 11:56	WG809054
Dibenz(a,h)anthracene	ND		0.0352	1	08/17/2015 11:56	WG809054
3,3-Dichlorobenzidine	ND		0.355	1	08/17/2015 11:56	WG809054
2,4-Dinitrotoluene	ND		0.355	1	08/17/2015 11:56	WG809054
2,6-Dinitrotoluene	ND		0.355	1	08/17/2015 11:56	WG809054
Fluoranthene	ND		0.0352	1	08/17/2015 11:56	WG809054
Fluorene	ND		0.0352	1	08/17/2015 11:56	WG809054
Hexachlorobenzene	ND		0.355	1	08/17/2015 11:56	WG809054
Hexachloro-1,3-butadiene	ND		0.355	1	08/17/2015 11:56	WG809054
Hexachlorocyclopentadiene	ND		0.355	1	08/17/2015 11:56	WG809054
Hexachloroethane	ND		0.355	1	08/17/2015 11:56	WG809054
Indeno(1,2,3-cd)pyrene	ND		0.0352	1	08/17/2015 11:56	WG809054
Isophorone	ND		0.355	1	08/17/2015 11:56	WG809054
Naphthalene	0.0414		0.0352	1	08/17/2015 11:56	WG809054
Nitrobenzene	ND		0.355	1	08/17/2015 11:56	WG809054
n-Nitrosodimethylamine	ND		0.355	1	08/17/2015 11:56	WG809054
n-Nitrosodiphenylamine	ND		0.355	1	08/17/2015 11:56	WG809054
n-Nitrosodi-n-propylamine	ND		0.355	1	08/17/2015 11:56	WG809054
Phenanthrene	ND		0.0352	1	08/17/2015 11:56	WG809054
Benzylbutyl phthalate	ND		0.355	1	08/17/2015 11:56	WG809054
Bis(2-ethylhexyl)phthalate	0.961		0.355	1	08/17/2015 11:56	WG809054
Di-n-butyl phthalate	ND		0.355	1	08/17/2015 11:56	WG809054
Diethyl phthalate	ND		0.355	1	08/17/2015 11:56	WG809054
Dimethyl phthalate	ND		0.355	1	08/17/2015 11:56	WG809054
Di-n-octyl phthalate	ND		0.355	1	08/17/2015 11:56	WG809054
Pyrene	ND		0.0352	1	08/17/2015 11:56	WG809054
1,2,4-Trichlorobenzene	ND		0.355	1	08/17/2015 11:56	WG809054
4-Chloro-3-methylphenol	ND		0.355	1	08/17/2015 11:56	WG809054
2-Chlorophenol	ND	J3	0.355	1	08/17/2015 11:56	WG809054
2,4-Dichlorophenol	ND		0.355	1	08/17/2015 11:56	WG809054
2,4-Dimethylphenol	ND		0.355	1	08/17/2015 11:56	WG809054
4,6-Dinitro-2-methylphenol	ND		0.355	1	08/17/2015 11:56	WG809054
2,4-Dinitrophenol	ND		0.355	1	08/17/2015 11:56	WG809054
2-Nitrophenol	ND		0.355	1	08/17/2015 11:56	WG809054
4-Nitrophenol	ND		0.355	1	08/17/2015 11:56	WG809054
Pentachlorophenol	ND	J3	0.355	1	08/17/2015 11:56	WG809054
Phenol	ND		0.355	1	08/17/2015 11:56	WG809054
2,4,6-Trichlorophenol	ND		0.355	1	08/17/2015 11:56	WG809054
(S) 2-Fluorophenol	*64.1*		*21.1-116*		*08/17/2015 11:56*	WG809054
(S) Phenol-d5	*68.8*		*26.3-121*		*08/17/2015 11:56*	WG809054
(S) Nitrobenzene-d5	*75.1*		*21.9-129*		*08/17/2015 11:56*	WG809054
(S) 2-Fluorobiphenyl	*66.9*		*34.9-129*		*08/17/2015 11:56*	WG809054
(S) 2,4,6-Tribromophenol	*70.9*		*21.6-142*		*08/17/2015 11:56*	WG809054
(S) p-Terphenyl-d14	*48.3*		*21.5-128*		*08/17/2015 11:56*	WG809054

Total Solids by Method 2540 G-2011

Analyte	Result %	Qualifier	Dilution	Analysis date / time	Batch
Total Solids	89.1		1	08/15/2015 08:43	WG809040

Volatile Organic Compounds (GC/MS) by Method 8260B

Analyte	Result (dry) mg/kg	Qualifier	RDL (dry) mg/kg	Dilution	Analysis date / time	Batch
Acetone	ND		0.281	5	08/16/2015 10:50	WG809075
Acrylonitrile	ND		0.0561	5	08/16/2015 10:50	WG809075
Benzene	ND		0.00561	5	08/16/2015 10:50	WG809075
Bromobenzene	ND		0.00561	5	08/16/2015 10:50	WG809075
Bromodichloromethane	ND		0.00561	5	08/16/2015 10:50	WG809075
Bromoform	ND		0.00561	5	08/16/2015 10:50	WG809075
Bromomethane	ND		0.0281	5	08/16/2015 10:50	WG809075
n-Butylbenzene	ND		0.00561	5	08/16/2015 10:50	WG809075
sec-Butylbenzene	ND		0.00561	5	08/16/2015 10:50	WG809075
tert-Butylbenzene	ND		0.00561	5	08/16/2015 10:50	WG809075
Carbon tetrachloride	ND		0.00561	5	08/16/2015 10:50	WG809075
Chlorobenzene	ND		0.00561	5	08/16/2015 10:50	WG809075
Chlorodibromomethane	ND		0.00561	5	08/16/2015 10:50	WG809075
Chloroethane	ND		0.0281	5	08/16/2015 10:50	WG809075
2-Chloroethyl vinyl ether	ND		0.281	5	08/16/2015 10:50	WG809075
Chloroform	ND		0.0281	5	08/16/2015 10:50	WG809075
Chloromethane	ND		0.0140	5	08/16/2015 10:50	WG809075
2-Chlorotoluene	ND		0.00561	5	08/16/2015 10:50	WG809075
4-Chlorotoluene	ND		0.00561	5	08/16/2015 10:50	WG809075
1,2-Dibromo-3-Chloropropane	ND		0.0281	5	08/16/2015 10:50	WG809075
1,2-Dibromoethane	ND		0.00561	5	08/16/2015 10:50	WG809075
Dibromomethane	ND		0.00561	5	08/16/2015 10:50	WG809075
1,2-Dichlorobenzene	ND		0.00561	5	08/16/2015 10:50	WG809075
1,3-Dichlorobenzene	ND		0.00561	5	08/16/2015 10:50	WG809075
1,4-Dichlorobenzene	ND		0.00561	5	08/16/2015 10:50	WG809075
Dichlorodifluoromethane	ND		0.0281	5	08/16/2015 10:50	WG809075
1,1-Dichloroethane	ND		0.00561	5	08/16/2015 10:50	WG809075
1,2-Dichloroethane	ND		0.00561	5	08/16/2015 10:50	WG809075
1,1-Dichloroethene	ND		0.00561	5	08/16/2015 10:50	WG809075
cis-1,2-Dichloroethene	ND		0.00561	5	08/16/2015 10:50	WG809075
trans-1,2-Dichloroethene	ND		0.00561	5	08/16/2015 10:50	WG809075
1,2-Dichloropropane	ND		0.00561	5	08/16/2015 10:50	WG809075
1,1-Dichloropropene	ND		0.00561	5	08/16/2015 10:50	WG809075
1,3-Dichloropropane	ND		0.00561	5	08/16/2015 10:50	WG809075
cis-1,3-Dichloropropene	ND		0.00561	5	08/16/2015 10:50	WG809075
trans-1,3-Dichloropropene	ND		0.00561	5	08/16/2015 10:50	WG809075
2,2-Dichloropropane	ND		0.00561	5	08/16/2015 10:50	WG809075
Dicyclopentadiene	ND		0.00561	5	08/16/2015 10:50	WG809075
Di-isopropyl ether	ND		0.00561	5	08/16/2015 10:50	WG809075
Ethylbenzene	ND		0.00561	5	08/16/2015 10:50	WG809075
Hexachloro-1,3-butadiene	ND		0.00561	5	08/16/2015 10:50	WG809075
Isopropylbenzene	ND		0.00561	5	08/16/2015 10:50	WG809075
p-Isopropyltoluene	ND		0.00561	5	08/16/2015 10:50	WG809075
2-Butanone (MEK)	ND		0.0561	5	08/16/2015 10:50	WG809075
Methylene Chloride	ND		0.0281	5	08/16/2015 10:50	WG809075
4-Methyl-2-pentanone (MIBK)	ND		0.0561	5	08/16/2015 10:50	WG809075
Methyl tert-butyl ether	ND		0.00561	5	08/16/2015 10:50	WG809075
Naphthalene	ND		0.0281	5	08/16/2015 10:50	WG809075
n-Propylbenzene	ND		0.00561	5	08/16/2015 10:50	WG809075
Styrene	ND		0.00561	5	08/16/2015 10:50	WG809075

Volatile Organic Compounds (GC/MS) by Method 8260B

Analyte	Result (dry) mg/kg	Qualifier	RDL (dry) mg/kg	Dilution	Analysis date / time	Batch
1,1,1,2-Tetrachloroethane	ND		0.00561	5	08/16/2015 10:50	WG809075
1,1,2,2-Tetrachloroethane	ND		0.00561	5	08/16/2015 10:50	WG809075
1,1,2-Trichlorotrifluoroethane	ND		0.00561	5	08/16/2015 10:50	WG809075
Tetrachloroethene	ND		0.00561	5	08/16/2015 10:50	WG809075
Toluene	ND		0.0281	5	08/16/2015 10:50	WG809075
1,2,3-Trichlorobenzene	ND		0.00561	5	08/16/2015 10:50	WG809075
1,2,4-Trichlorobenzene	ND		0.00561	5	08/16/2015 10:50	WG809075
1,1,1-Trichloroethane	ND		0.00561	5	08/16/2015 10:50	WG809075
1,1,2-Trichloroethane	ND		0.00561	5	08/16/2015 10:50	WG809075
Trichloroethene	ND		0.00561	5	08/16/2015 10:50	WG809075
Trichlorofluoromethane	ND		0.0281	5	08/16/2015 10:50	WG809075
1,2,3-Trichloropropane	ND		0.0140	5	08/16/2015 10:50	WG809075
1,2,4-Trimethylbenzene	ND		0.00561	5	08/16/2015 10:50	WG809075
1,2,3-Trimethylbenzene	ND		0.00561	5	08/16/2015 10:50	WG809075
1,3,5-Trimethylbenzene	ND		0.00561	5	08/16/2015 10:50	WG809075
Vinyl chloride	ND		0.00561	5	08/16/2015 10:50	WG809075
Xylenes, Total	ND		0.0168	5	08/16/2015 10:50	WG809075
(S) Toluene-d8	*99.0*		*88.7-115*		*08/16/2015 10:50*	WG809075
(S) Dibromofluoromethane	*97.1*		*76.3-123*		*08/16/2015 10:50*	WG809075
(S) 4-Bromofluorobenzene	*97.5*		*69.7-129*		*08/16/2015 10:50*	WG809075

Semi Volatile Organic Compounds (GC/MS) by Method 8270C

Analyte	Result (dry) mg/kg	Qualifier	RDL (dry) mg/kg	Dilution	Analysis date / time	Batch
Acenaphthene	ND		0.0370	1	08/17/2015 12:20	WG809054
Acenaphthylene	ND		0.0370	1	08/17/2015 12:20	WG809054
Anthracene	ND		0.0370	1	08/17/2015 12:20	WG809054
Benzidine	ND		0.374	1	08/17/2015 12:20	WG809054
Benzo(a)anthracene	ND		0.0370	1	08/17/2015 12:20	WG809054
Benzo(b)fluoranthene	ND		0.0370	1	08/17/2015 12:20	WG809054
Benzo(k)fluoranthene	ND		0.0370	1	08/17/2015 12:20	WG809054
Benzo(g,h,i)perylene	ND		0.0370	1	08/17/2015 12:20	WG809054
Benzo(a)pyrene	ND		0.0370	1	08/17/2015 12:20	WG809054
Bis(2-chlorethoxy)methane	ND		0.374	1	08/17/2015 12:20	WG809054
Bis(2-chloroethyl)ether	ND		0.374	1	08/17/2015 12:20	WG809054
Bis(2-chloroisopropyl)ether	ND		0.374	1	08/17/2015 12:20	WG809054
4-Bromophenyl-phenylether	ND		0.374	1	08/17/2015 12:20	WG809054
2-Chloronaphthalene	ND		0.0370	1	08/17/2015 12:20	WG809054
4-Chlorophenyl-phenylether	ND		0.374	1	08/17/2015 12:20	WG809054
Chrysene	ND		0.0370	1	08/17/2015 12:20	WG809054
Dibenz(a,h)anthracene	ND		0.0370	1	08/17/2015 12:20	WG809054
3,3-Dichlorobenzidine	ND		0.374	1	08/17/2015 12:20	WG809054
2,4-Dinitrotoluene	ND		0.374	1	08/17/2015 12:20	WG809054
2,6-Dinitrotoluene	ND		0.374	1	08/17/2015 12:20	WG809054
Fluoranthene	ND		0.0370	1	08/17/2015 12:20	WG809054
Fluorene	ND		0.0370	1	08/17/2015 12:20	WG809054
Hexachlorobenzene	ND		0.374	1	08/17/2015 12:20	WG809054
Hexachloro-1,3-butadiene	ND		0.374	1	08/17/2015 12:20	WG809054
Hexachlorocyclopentadiene	ND		0.374	1	08/17/2015 12:20	WG809054
Hexachloroethane	ND		0.374	1	08/17/2015 12:20	WG809054
Indeno(1,2,3-cd)pyrene	ND		0.0370	1	08/17/2015 12:20	WG809054
Isophorone	ND		0.374	1	08/17/2015 12:20	WG809054
Naphthalene	ND		0.0370	1	08/17/2015 12:20	WG809054
Nitrobenzene	ND		0.374	1	08/17/2015 12:20	WG809054
n-Nitrosodimethylamine	ND		0.374	1	08/17/2015 12:20	WG809054
n-Nitrosodiphenylamine	ND		0.374	1	08/17/2015 12:20	WG809054

Semi Volatile Organic Compounds (GC/MS) by Method 8270C

Analyte	Result (dry) mg/kg	Qualifier	RDL (dry) mg/kg	Dilution	Analysis date / time	Batch
n-Nitrosodi-n-propylamine	ND		0.374	1	08/17/2015 12:20	WG809054
Phenanthrene	ND		0.0370	1	08/17/2015 12:20	WG809054
Benzylbutyl phthalate	ND		0.374	1	08/17/2015 12:20	WG809054
Bis(2-ethylhexyl)phthalate	ND		0.374	1	08/17/2015 12:20	WG809054
Di-n-butyl phthalate	ND		0.374	1	08/17/2015 12:20	WG809054
Diethyl phthalate	ND		0.374	1	08/17/2015 12:20	WG809054
Dimethyl phthalate	ND		0.374	1	08/17/2015 12:20	WG809054
Di-n-octyl phthalate	ND		0.374	1	08/17/2015 12:20	WG809054
Pyrene	ND		0.0370	1	08/17/2015 12:20	WG809054
1,2,4-Trichlorobenzene	ND		0.374	1	08/17/2015 12:20	WG809054
4-Chloro-3-methylphenol	ND		0.374	1	08/17/2015 12:20	WG809054
2-Chlorophenol	ND	J3	0.374	1	08/17/2015 12:20	WG809054
2,4-Dichlorophenol	ND		0.374	1	08/17/2015 12:20	WG809054
2,4-Dimethylphenol	ND		0.374	1	08/17/2015 12:20	WG809054
4,6-Dinitro-2-methylphenol	ND		0.374	1	08/17/2015 12:20	WG809054
2,4-Dinitrophenol	ND		0.374	1	08/17/2015 12:20	WG809054
2-Nitrophenol	ND		0.374	1	08/17/2015 12:20	WG809054
4-Nitrophenol	ND		0.374	1	08/17/2015 12:20	WG809054
Pentachlorophenol	ND	J3	0.374	1	08/17/2015 12:20	WG809054
Phenol	ND		0.374	1	08/17/2015 12:20	WG809054
2,4,6-Trichlorophenol	ND		0.374	1	08/17/2015 12:20	WG809054
(S) 2-Fluorophenol	*75.7*		*21.1-116*		*08/17/2015 12:20*	WG809054
(S) Phenol-d5	*75.5*		*26.3-121*		*08/17/2015 12:20*	WG809054
(S) Nitrobenzene-d5	*81.1*		*21.9-129*		*08/17/2015 12:20*	WG809054
(S) 2-Fluorobiphenyl	*73.8*		*34.9-129*		*08/17/2015 12:20*	WG809054
(S) 2,4,6-Tribromophenol	*83.1*		*21.6-142*		*08/17/2015 12:20*	WG809054
(S) p-Terphenyl-d14	*58.5*		*21.5-128*		*08/17/2015 12:20*	WG809054

Total Solids by Method 2540 G-2011

Analyte	Result %	Qualifier	Dilution	Analysis date / time	Batch
Total Solids	92.9		1	08/15/2015 08:44	WG809040

Mercury by Method 7471A

Analyte	Result (dry) mg/kg	Qualifier	RDL (dry) mg/kg	Dilution	Analysis date / time	Batch
Mercury	0.0453		0.0215	1	08/15/2015 10:06	WG809114

Metals (ICP) by Method 6010B

Analyte	Result (dry) mg/kg	Qualifier	RDL (dry) mg/kg	Dilution	Analysis date / time	Batch
Arsenic	4.32		2.15	1	08/14/2015 16:22	WG809022
Barium	41.1		0.538	1	08/14/2015 16:22	WG809022
Cadmium	ND		0.538	1	08/14/2015 16:22	WG809022
Chromium	8.64		1.08	1	08/14/2015 16:22	WG809022
Lead	8.66		0.538	1	08/14/2015 16:22	WG809022
Selenium	ND		2.15	1	08/14/2015 16:22	WG809022
Silver	ND		1.08	1	08/14/2015 16:22	WG809022

Volatile Organic Compounds (GC/MS) by Method 8260B

Analyte	Result (dry) mg/kg	Qualifier	RDL (dry) mg/kg	Dilution	Analysis date / time	Batch
Acetone	ND		0.269	5	08/16/2015 05:22	WG809075
Acrylonitrile	ND		0.0538	5	08/16/2015 05:22	WG809075
Benzene	ND		0.00538	5	08/16/2015 05:22	WG809075
Bromobenzene	ND		0.00538	5	08/16/2015 05:22	WG809075
Bromodichloromethane	ND		0.00538	5	08/16/2015 05:22	WG809075
Bromoform	ND		0.00538	5	08/16/2015 05:22	WG809075
Bromomethane	ND	J3	0.0269	5	08/16/2015 05:22	WG809075
n-Butylbenzene	ND		0.00538	5	08/16/2015 05:22	WG809075
sec-Butylbenzene	ND		0.00538	5	08/16/2015 05:22	WG809075
tert-Butylbenzene	ND		0.00538	5	08/16/2015 05:22	WG809075
Carbon tetrachloride	ND		0.00538	5	08/16/2015 05:22	WG809075
Chlorobenzene	ND		0.00538	5	08/16/2015 05:22	WG809075
Chlorodibromomethane	ND		0.00538	5	08/16/2015 05:22	WG809075
Chloroethane	ND		0.0269	5	08/16/2015 05:22	WG809075
2-Chloroethyl vinyl ether	ND		0.269	5	08/16/2015 05:22	WG809075
Chloroform	ND		0.0269	5	08/16/2015 05:22	WG809075
Chloromethane	ND		0.0135	5	08/16/2015 05:22	WG809075
2-Chlorotoluene	ND		0.00538	5	08/16/2015 05:22	WG809075
4-Chlorotoluene	ND		0.00538	5	08/16/2015 05:22	WG809075
1,2-Dibromo-3-Chloropropane	ND		0.0269	5	08/16/2015 05:22	WG809075
1,2-Dibromoethane	ND		0.00538	5	08/16/2015 05:22	WG809075
Dibromomethane	ND		0.00538	5	08/16/2015 05:22	WG809075
1,2-Dichlorobenzene	ND		0.00538	5	08/16/2015 05:22	WG809075
1,3-Dichlorobenzene	ND		0.00538	5	08/16/2015 05:22	WG809075
1,4-Dichlorobenzene	ND		0.00538	5	08/16/2015 05:22	WG809075
Dichlorodifluoromethane	ND		0.0269	5	08/16/2015 05:22	WG809075
1,1-Dichloroethane	ND		0.00538	5	08/16/2015 05:22	WG809075
1,2-Dichloroethane	ND		0.00538	5	08/16/2015 05:22	WG809075
1,1-Dichloroethene	ND		0.00538	5	08/16/2015 05:22	WG809075
cis-1,2-Dichloroethene	ND		0.00538	5	08/16/2015 05:22	WG809075
trans-1,2-Dichloroethene	ND		0.00538	5	08/16/2015 05:22	WG809075
1,2-Dichloropropane	ND		0.00538	5	08/16/2015 05:22	WG809075
1,1-Dichloropropene	ND		0.00538	5	08/16/2015 05:22	WG809075

Volatile Organic Compounds (GC/MS) by Method 8260B

Analyte	Result (dry) mg/kg	Qualifier	RDL (dry) mg/kg	Dilution	Analysis date / time	Batch
1,3-Dichloropropane	ND		0.00538	5	08/16/2015 05:22	WG809075
cis-1,3-Dichloropropene	ND		0.00538	5	08/16/2015 05:22	WG809075
trans-1,3-Dichloropropene	ND	J3	0.00538	5	08/16/2015 05:22	WG809075
2,2-Dichloropropane	ND		0.00538	5	08/16/2015 05:22	WG809075
Dicyclopentadiene	ND		0.00538	5	08/16/2015 05:22	WG809075
Di-isopropyl ether	ND		0.00538	5	08/16/2015 05:22	WG809075
Ethylbenzene	ND		0.00538	5	08/16/2015 05:22	WG809075
Hexachloro-1,3-butadiene	ND		0.00538	5	08/16/2015 05:22	WG809075
Isopropylbenzene	ND		0.00538	5	08/16/2015 05:22	WG809075
p-Isopropyltoluene	ND		0.00538	5	08/16/2015 05:22	WG809075
2-Butanone (MEK)	ND		0.0538	5	08/16/2015 05:22	WG809075
Methylene Chloride	ND	J3	0.0269	5	08/16/2015 05:22	WG809075
4-Methyl-2-pentanone (MIBK)	ND		0.0538	5	08/16/2015 05:22	WG809075
Methyl tert-butyl ether	ND		0.00538	5	08/16/2015 05:22	WG809075
Naphthalene	ND		0.0269	5	08/16/2015 05:22	WG809075
n-Propylbenzene	ND		0.00538	5	08/16/2015 05:22	WG809075
Styrene	ND		0.00538	5	08/16/2015 05:22	WG809075
1,1,1,2-Tetrachloroethane	ND		0.00538	5	08/16/2015 05:22	WG809075
1,1,2,2-Tetrachloroethane	ND		0.00538	5	08/16/2015 05:22	WG809075
1,1,2-Trichlorotrifluoroethane	ND		0.00538	5	08/16/2015 05:22	WG809075
Tetrachloroethene	ND		0.00538	5	08/16/2015 05:22	WG809075
Toluene	ND		0.0269	5	08/16/2015 05:22	WG809075
1,2,3-Trichlorobenzene	ND		0.00538	5	08/16/2015 05:22	WG809075
1,2,4-Trichlorobenzene	ND		0.00538	5	08/16/2015 05:22	WG809075
1,1,1-Trichloroethane	ND		0.00538	5	08/16/2015 05:22	WG809075
1,1,2-Trichloroethane	ND		0.00538	5	08/16/2015 05:22	WG809075
Trichloroethene	ND		0.00538	5	08/16/2015 05:22	WG809075
Trichlorofluoromethane	ND		0.0269	5	08/16/2015 05:22	WG809075
1,2,3-Trichloropropane	ND		0.0135	5	08/16/2015 05:22	WG809075
1,2,4-Trimethylbenzene	ND		0.00538	5	08/16/2015 05:22	WG809075
1,2,3-Trimethylbenzene	ND		0.00538	5	08/16/2015 05:22	WG809075
1,3,5-Trimethylbenzene	ND		0.00538	5	08/16/2015 05:22	WG809075
Vinyl chloride	ND		0.00538	5	08/16/2015 05:22	WG809075
Xylenes, Total	ND		0.0161	5	08/16/2015 05:22	WG809075
(S) Toluene-d8	*99.9*		*88.7-115*		*08/16/2015 05:22*	WG809075
(S) Dibromofluoromethane	*96.6*		*76.3-123*		*08/16/2015 05:22*	WG809075
(S) 4-Bromofluorobenzene	*96.9*		*69.7-129*		*08/16/2015 05:22*	WG809075

Semi Volatile Organic Compounds (GC/MS) by Method 8270C

Analyte	Result (dry) mg/kg	Qualifier	RDL (dry) mg/kg	Dilution	Analysis date / time	Batch
Acenaphthene	ND		0.0355	1	08/17/2015 12:45	WG809054
Acenaphthylene	ND		0.0355	1	08/17/2015 12:45	WG809054
Anthracene	ND		0.0355	1	08/17/2015 12:45	WG809054
Benzidine	ND		0.359	1	08/17/2015 12:45	WG809054
Benzo(a)anthracene	ND		0.0355	1	08/17/2015 12:45	WG809054
Benzo(b)fluoranthene	ND		0.0355	1	08/17/2015 12:45	WG809054
Benzo(k)fluoranthene	ND		0.0355	1	08/17/2015 12:45	WG809054
Benzo(g,h,i)perylene	ND		0.0355	1	08/17/2015 12:45	WG809054
Benzo(a)pyrene	ND		0.0355	1	08/17/2015 12:45	WG809054
Bis(2-chlorethoxy)methane	ND		0.359	1	08/17/2015 12:45	WG809054
Bis(2-chloroethyl)ether	ND		0.359	1	08/17/2015 12:45	WG809054
Bis(2-chloroisopropyl)ether	ND		0.359	1	08/17/2015 12:45	WG809054
4-Bromophenyl-phenylether	ND		0.359	1	08/17/2015 12:45	WG809054
2-Chloronaphthalene	ND		0.0355	1	08/17/2015 12:45	WG809054
4-Chlorophenyl-phenylether	ND		0.359	1	08/17/2015 12:45	WG809054

Semi Volatile Organic Compounds (GC/MS) by Method 8270C

Analyte	Result (dry) mg/kg	Qualifier	RDL (dry) mg/kg	Dilution	Analysis date / time	Batch
Chrysene	ND		0.0355	1	08/17/2015 12:45	WG809054
Dibenz(a,h)anthracene	ND		0.0355	1	08/17/2015 12:45	WG809054
3,3-Dichlorobenzidine	ND		0.359	1	08/17/2015 12:45	WG809054
2,4-Dinitrotoluene	ND		0.359	1	08/17/2015 12:45	WG809054
2,6-Dinitrotoluene	ND		0.359	1	08/17/2015 12:45	WG809054
Fluoranthene	ND		0.0355	1	08/17/2015 12:45	WG809054
Fluorene	ND		0.0355	1	08/17/2015 12:45	WG809054
Hexachlorobenzene	ND		0.359	1	08/17/2015 12:45	WG809054
Hexachloro-1,3-butadiene	ND		0.359	1	08/17/2015 12:45	WG809054
Hexachlorocyclopentadiene	ND		0.359	1	08/17/2015 12:45	WG809054
Hexachloroethane	ND		0.359	1	08/17/2015 12:45	WG809054
Indeno(1,2,3-cd)pyrene	ND		0.0355	1	08/17/2015 12:45	WG809054
Isophorone	ND		0.359	1	08/17/2015 12:45	WG809054
Naphthalene	ND		0.0355	1	08/17/2015 12:45	WG809054
Nitrobenzene	ND		0.359	1	08/17/2015 12:45	WG809054
n-Nitrosodimethylamine	ND		0.359	1	08/17/2015 12:45	WG809054
n-Nitrosodiphenylamine	ND		0.359	1	08/17/2015 12:45	WG809054
n-Nitrosodi-n-propylamine	ND		0.359	1	08/17/2015 12:45	WG809054
Phenanthrene	ND		0.0355	1	08/17/2015 12:45	WG809054
Benzylbutyl phthalate	ND		0.359	1	08/17/2015 12:45	WG809054
Bis(2-ethylhexyl)phthalate	ND		0.359	1	08/17/2015 12:45	WG809054
Di-n-butyl phthalate	ND		0.359	1	08/17/2015 12:45	WG809054
Diethyl phthalate	ND		0.359	1	08/17/2015 12:45	WG809054
Dimethyl phthalate	ND		0.359	1	08/17/2015 12:45	WG809054
Di-n-octyl phthalate	ND		0.359	1	08/17/2015 12:45	WG809054
Pyrene	ND		0.0355	1	08/17/2015 12:45	WG809054
1,2,4-Trichlorobenzene	ND		0.359	1	08/17/2015 12:45	WG809054
4-Chloro-3-methylphenol	ND		0.359	1	08/17/2015 12:45	WG809054
2-Chlorophenol	ND	J3	0.359	1	08/17/2015 12:45	WG809054
2,4-Dichlorophenol	ND		0.359	1	08/17/2015 12:45	WG809054
2,4-Dimethylphenol	ND		0.359	1	08/17/2015 12:45	WG809054
4,6-Dinitro-2-methylphenol	ND		0.359	1	08/17/2015 12:45	WG809054
2,4-Dinitrophenol	ND		0.359	1	08/17/2015 12:45	WG809054
2-Nitrophenol	ND		0.359	1	08/17/2015 12:45	WG809054
4-Nitrophenol	ND		0.359	1	08/17/2015 12:45	WG809054
Pentachlorophenol	ND	J3	0.359	1	08/17/2015 12:45	WG809054
Phenol	ND		0.359	1	08/17/2015 12:45	WG809054
2,4,6-Trichlorophenol	ND		0.359	1	08/17/2015 12:45	WG809054
(S) 2-Fluorophenol	*71.4*		*21.1-116*		*08/17/2015 12:45*	WG809054
(S) Phenol-d5	*74.6*		*26.3-121*		*08/17/2015 12:45*	WG809054
(S) Nitrobenzene-d5	*73.5*		*21.9-129*		*08/17/2015 12:45*	WG809054
(S) 2-Fluorobiphenyl	*69.0*		*34.9-129*		*08/17/2015 12:45*	WG809054
(S) 2,4,6-Tribromophenol	*69.2*		*21.6-142*		*08/17/2015 12:45*	WG809054
(S) p-Terphenyl-d14	*55.3*		*21.5-128*		*08/17/2015 12:45*	WG809054

Total Solids by Method 2540 G-2011

Analyte	Result %	Qualifier	Dilution	Analysis date / time	Batch
Total Solids	91.2		1	08/15/2015 08:44	WG809040

Volatile Organic Compounds (GC/MS) by Method 8260B

Analyte	Result (dry) mg/kg	Qualifier	RDL (dry) mg/kg	Dilution	Analysis date / time	Batch
Acetone	ND		1.37	25	08/17/2015 12:27	WG809612
Acrylonitrile	ND		0.274	25	08/17/2015 12:27	WG809612
Benzene	ND		0.0274	25	08/17/2015 12:27	WG809612
Bromobenzene	ND		0.0274	25	08/17/2015 12:27	WG809612
Bromodichloromethane	ND		0.0274	25	08/17/2015 12:27	WG809612
Bromoform	ND		0.0274	25	08/17/2015 12:27	WG809612
Bromomethane	ND		0.137	25	08/17/2015 12:27	WG809612
n-Butylbenzene	0.0445		0.0274	25	08/17/2015 12:27	WG809612
sec-Butylbenzene	ND		0.0274	25	08/17/2015 12:27	WG809612
tert-Butylbenzene	ND		0.0274	25	08/17/2015 12:27	WG809612
Carbon tetrachloride	ND		0.0274	25	08/17/2015 12:27	WG809612
Chlorobenzene	ND		0.0274	25	08/17/2015 12:27	WG809612
Chlorodibromomethane	ND		0.0274	25	08/17/2015 12:27	WG809612
Chloroethane	ND		0.137	25	08/17/2015 12:27	WG809612
2-Chloroethyl vinyl ether	ND		1.37	25	08/17/2015 12:27	WG809612
Chloroform	ND		0.137	25	08/17/2015 12:27	WG809612
Chloromethane	ND		0.0685	25	08/17/2015 12:27	WG809612
2-Chlorotoluene	ND		0.0274	25	08/17/2015 12:27	WG809612
4-Chlorotoluene	ND		0.0274	25	08/17/2015 12:27	WG809612
1,2-Dibromo-3-Chloropropane	ND		0.137	25	08/17/2015 12:27	WG809612
1,2-Dibromoethane	ND		0.0274	25	08/17/2015 12:27	WG809612
Dibromomethane	ND		0.0274	25	08/17/2015 12:27	WG809612
1,2-Dichlorobenzene	ND		0.0274	25	08/17/2015 12:27	WG809612
1,3-Dichlorobenzene	ND		0.0274	25	08/17/2015 12:27	WG809612
1,4-Dichlorobenzene	ND		0.0274	25	08/17/2015 12:27	WG809612
Dichlorodifluoromethane	ND		0.137	25	08/17/2015 12:27	WG809612
1,1-Dichloroethane	ND		0.0274	25	08/17/2015 12:27	WG809612
1,2-Dichloroethane	ND		0.0274	25	08/17/2015 12:27	WG809612
1,1-Dichloroethene	ND		0.0274	25	08/17/2015 12:27	WG809612
cis-1,2-Dichloroethene	ND		0.0274	25	08/17/2015 12:27	WG809612
trans-1,2-Dichloroethene	ND		0.0274	25	08/17/2015 12:27	WG809612
1,2-Dichloropropane	ND		0.0274	25	08/17/2015 12:27	WG809612
1,1-Dichloropropene	ND		0.0274	25	08/17/2015 12:27	WG809612
1,3-Dichloropropane	ND		0.0274	25	08/17/2015 12:27	WG809612
cis-1,3-Dichloropropene	ND		0.0274	25	08/17/2015 12:27	WG809612
trans-1,3-Dichloropropene	ND		0.0274	25	08/17/2015 12:27	WG809612
2,2-Dichloropropane	ND		0.0274	25	08/17/2015 12:27	WG809612
Dicyclopentadiene	0.386		0.0274	25	08/17/2015 12:27	WG809612
Di-isopropyl ether	ND		0.0274	25	08/17/2015 12:27	WG809612
Ethylbenzene	ND		0.0274	25	08/17/2015 12:27	WG809612
Hexachloro-1,3-butadiene	ND		0.0274	25	08/17/2015 12:27	WG809612
Isopropylbenzene	ND		0.0274	25	08/17/2015 12:27	WG809612
p-Isopropyltoluene	ND		0.0274	25	08/17/2015 12:27	WG809612
2-Butanone (MEK)	ND		0.274	25	08/17/2015 12:27	WG809612
Methylene Chloride	ND		0.137	25	08/17/2015 12:27	WG809612
4-Methyl-2-pentanone (MIBK)	ND		0.274	25	08/17/2015 12:27	WG809612
Methyl tert-butyl ether	ND		0.0274	25	08/17/2015 12:27	WG809612
Naphthalene	1.96		0.137	25	08/17/2015 12:27	WG809612
n-Propylbenzene	0.0393		0.0274	25	08/17/2015 12:27	WG809612
Styrene	ND		0.0274	25	08/17/2015 12:27	WG809612

Volatile Organic Compounds (GC/MS) by Method 8260B

Analyte	Result (dry) mg/kg	Qualifier	RDL (dry) mg/kg	Dilution	Analysis date / time	Batch
1,1,1,2-Tetrachloroethane	ND		0.0274	25	08/17/2015 12:27	WG809612
1,1,2,2-Tetrachloroethane	ND		0.0274	25	08/17/2015 12:27	WG809612
1,1,2-Trichlorotrifluoroethane	ND		0.0274	25	08/17/2015 12:27	WG809612
Tetrachloroethene	ND		0.0274	25	08/17/2015 12:27	WG809612
Toluene	ND		0.137	25	08/17/2015 12:27	WG809612
1,2,3-Trichlorobenzene	ND		0.0274	25	08/17/2015 12:27	WG809612
1,2,4-Trichlorobenzene	ND		0.0274	25	08/17/2015 12:27	WG809612
1,1,1-Trichloroethane	ND		0.0274	25	08/17/2015 12:27	WG809612
1,1,2-Trichloroethane	ND		0.0274	25	08/17/2015 12:27	WG809612
Trichloroethene	ND		0.0274	25	08/17/2015 12:27	WG809612
Trichlorofluoromethane	ND		0.137	25	08/17/2015 12:27	WG809612
1,2,3-Trichloropropane	ND		0.0685	25	08/17/2015 12:27	WG809612
1,2,4-Trimethylbenzene	0.588		0.0274	25	08/17/2015 12:27	WG809612
1,2,3-Trimethylbenzene	0.338		0.0274	25	08/17/2015 12:27	WG809612
1,3,5-Trimethylbenzene	0.171		0.0274	25	08/17/2015 12:27	WG809612
Vinyl chloride	ND		0.0274	25	08/17/2015 12:27	WG809612
Xylenes, Total	ND		0.0822	25	08/17/2015 12:27	WG809612
(S) Toluene-d8	*99.6*		*88.7-115*		*08/17/2015 12:27*	WG809612
(S) Dibromofluoromethane	*90.3*		*76.3-123*		*08/17/2015 12:27*	WG809612
(S) 4-Bromofluorobenzene	*107*		*69.7-129*		*08/17/2015 12:27*	WG809612

Semi Volatile Organic Compounds (GC/MS) by Method 8270C

Analyte	Result (dry) mg/kg	Qualifier	RDL (dry) mg/kg	Dilution	Analysis date / time	Batch
Acenaphthene	ND		0.0362	1	08/17/2015 13:10	WG809054
Acenaphthylene	ND		0.0362	1	08/17/2015 13:10	WG809054
Anthracene	ND		0.0362	1	08/17/2015 13:10	WG809054
Benzidine	ND		0.365	1	08/17/2015 13:10	WG809054
Benzo(a)anthracene	ND		0.0362	1	08/17/2015 13:10	WG809054
Benzo(b)fluoranthene	ND		0.0362	1	08/17/2015 13:10	WG809054
Benzo(k)fluoranthene	ND		0.0362	1	08/17/2015 13:10	WG809054
Benzo(g,h,i)perylene	ND		0.0362	1	08/17/2015 13:10	WG809054
Benzo(a)pyrene	ND		0.0362	1	08/17/2015 13:10	WG809054
Bis(2-chlorethoxy)methane	ND		0.365	1	08/17/2015 13:10	WG809054
Bis(2-chloroethyl)ether	ND		0.365	1	08/17/2015 13:10	WG809054
Bis(2-chloroisopropyl)ether	ND		0.365	1	08/17/2015 13:10	WG809054
4-Bromophenyl-phenylether	ND		0.365	1	08/17/2015 13:10	WG809054
2-Chloronaphthalene	ND		0.0362	1	08/17/2015 13:10	WG809054
4-Chlorophenyl-phenylether	ND		0.365	1	08/17/2015 13:10	WG809054
Chrysene	ND		0.0362	1	08/17/2015 13:10	WG809054
Dibenz(a,h)anthracene	ND		0.0362	1	08/17/2015 13:10	WG809054
3,3-Dichlorobenzidine	ND		0.365	1	08/17/2015 13:10	WG809054
2,4-Dinitrotoluene	ND		0.365	1	08/17/2015 13:10	WG809054
2,6-Dinitrotoluene	ND		0.365	1	08/17/2015 13:10	WG809054
Fluoranthene	ND		0.0362	1	08/17/2015 13:10	WG809054
Fluorene	ND		0.0362	1	08/17/2015 13:10	WG809054
Hexachlorobenzene	ND		0.365	1	08/17/2015 13:10	WG809054
Hexachloro-1,3-butadiene	ND		0.365	1	08/17/2015 13:10	WG809054
Hexachlorocyclopentadiene	ND		0.365	1	08/17/2015 13:10	WG809054
Hexachloroethane	ND		0.365	1	08/17/2015 13:10	WG809054
Indeno(1,2,3-cd)pyrene	ND		0.0362	1	08/17/2015 13:10	WG809054
Isophorone	ND		0.365	1	08/17/2015 13:10	WG809054
Naphthalene	5.62		0.723	20	08/17/2015 15:14	WG809054
Nitrobenzene	ND		0.365	1	08/17/2015 13:10	WG809054
n-Nitrosodimethylamine	ND		0.365	1	08/17/2015 13:10	WG809054
n-Nitrosodiphenylamine	ND		0.365	1	08/17/2015 13:10	WG809054

Semi Volatile Organic Compounds (GC/MS) by Method 8270C

Analyte	Result (dry) mg/kg	Qualifier	RDL (dry) mg/kg	Dilution	Analysis date / time	Batch
n-Nitrosodi-n-propylamine	ND		0.365	1	08/17/2015 13:10	WG809054
Phenanthrene	ND		0.0362	1	08/17/2015 13:10	WG809054
Benzylbutyl phthalate	ND		0.365	1	08/17/2015 13:10	WG809054
Bis(2-ethylhexyl)phthalate	ND		0.365	1	08/17/2015 13:10	WG809054
Di-n-butyl phthalate	ND		0.365	1	08/17/2015 13:10	WG809054
Diethyl phthalate	ND		0.365	1	08/17/2015 13:10	WG809054
Dimethyl phthalate	ND		0.365	1	08/17/2015 13:10	WG809054
Di-n-octyl phthalate	ND		0.365	1	08/17/2015 13:10	WG809054
Pyrene	ND		0.0362	1	08/17/2015 13:10	WG809054
1,2,4-Trichlorobenzene	ND		0.365	1	08/17/2015 13:10	WG809054
4-Chloro-3-methylphenol	ND		0.365	1	08/17/2015 13:10	WG809054
2-Chlorophenol	ND	J3	0.365	1	08/17/2015 13:10	WG809054
2,4-Dichlorophenol	ND		0.365	1	08/17/2015 13:10	WG809054
2,4-Dimethylphenol	ND		0.365	1	08/17/2015 13:10	WG809054
4,6-Dinitro-2-methylphenol	ND		0.365	1	08/17/2015 13:10	WG809054
2,4-Dinitrophenol	ND		0.365	1	08/17/2015 13:10	WG809054
2-Nitrophenol	ND		0.365	1	08/17/2015 13:10	WG809054
4-Nitrophenol	ND		0.365	1	08/17/2015 13:10	WG809054
Pentachlorophenol	ND	J3	0.365	1	08/17/2015 13:10	WG809054
Phenol	ND		0.365	1	08/17/2015 13:10	WG809054
2,4,6-Trichlorophenol	ND		0.365	1	08/17/2015 13:10	WG809054
(S) 2-Fluorophenol	*66.6*		*21.1-116*		*08/17/2015 13:10*	WG809054
(S) Phenol-d5	*70.4*		*26.3-121*		*08/17/2015 13:10*	WG809054
(S) Nitrobenzene-d5	*82.1*		*21.9-129*		*08/17/2015 13:10*	WG809054
(S) 2-Fluorobiphenyl	*74.5*		*34.9-129*		*08/17/2015 13:10*	WG809054
(S) 2,4,6-Tribromophenol	*77.5*		*21.6-142*		*08/17/2015 13:10*	WG809054
(S) p-Terphenyl-d14	*63.8*		*21.5-128*		*08/17/2015 13:10*	WG809054

Total Solids by Method 2540 G-2011

Analyte	Result %	Qualifier	Dilution	Analysis date / time	Batch
Total Solids	91.4		1	08/15/2015 08:44	WG809040

Mercury by Method 7471A

Analyte	Result (dry) mg/kg	Qualifier	RDL (dry) mg/kg	Dilution	Analysis date / time	Batch
Mercury	ND		0.0219	1	08/15/2015 10:08	WG809114

Metals (ICP) by Method 6010B

Analyte	Result (dry) mg/kg	Qualifier	RDL (dry) mg/kg	Dilution	Analysis date / time	Batch
Arsenic	5.57		2.19	1	08/14/2015 16:25	WG809022
Barium	30.8		0.547	1	08/14/2015 16:25	WG809022
Cadmium	ND		0.547	1	08/14/2015 16:25	WG809022
Chromium	8.05		1.09	1	08/14/2015 16:25	WG809022
Lead	5.50		0.547	1	08/14/2015 16:25	WG809022
Selenium	ND		2.19	1	08/14/2015 16:25	WG809022
Silver	ND		1.09	1	08/14/2015 16:25	WG809022

Volatile Organic Compounds (GC/MS) by Method 8260B

Analyte	Result (dry) mg/kg	Qualifier	RDL (dry) mg/kg	Dilution	Analysis date / time	Batch
Acetone	ND		0.274	5	08/16/2015 11:28	WG809075
Acrylonitrile	ND		0.0547	5	08/16/2015 11:28	WG809075
Benzene	ND		0.00547	5	08/16/2015 11:28	WG809075
Bromobenzene	ND		0.00547	5	08/16/2015 11:28	WG809075
Bromodichloromethane	ND		0.00547	5	08/16/2015 11:28	WG809075
Bromoform	ND		0.00547	5	08/16/2015 11:28	WG809075
Bromomethane	ND		0.0274	5	08/16/2015 11:28	WG809075
n-Butylbenzene	ND		0.00547	5	08/16/2015 11:28	WG809075
sec-Butylbenzene	ND		0.00547	5	08/16/2015 11:28	WG809075
tert-Butylbenzene	ND		0.00547	5	08/16/2015 11:28	WG809075
Carbon tetrachloride	ND		0.00547	5	08/16/2015 11:28	WG809075
Chlorobenzene	ND		0.00547	5	08/16/2015 11:28	WG809075
Chlorodibromomethane	ND		0.00547	5	08/16/2015 11:28	WG809075
Chloroethane	ND		0.0274	5	08/16/2015 11:28	WG809075
2-Chloroethyl vinyl ether	ND		0.274	5	08/16/2015 11:28	WG809075
Chloroform	ND		0.0274	5	08/16/2015 11:28	WG809075
Chloromethane	ND		0.0137	5	08/16/2015 11:28	WG809075
2-Chlorotoluene	ND		0.00547	5	08/16/2015 11:28	WG809075
4-Chlorotoluene	ND		0.00547	5	08/16/2015 11:28	WG809075
1,2-Dibromo-3-Chloropropane	ND		0.0274	5	08/16/2015 11:28	WG809075
1,2-Dibromoethane	ND		0.00547	5	08/16/2015 11:28	WG809075
Dibromomethane	ND		0.00547	5	08/16/2015 11:28	WG809075
1,2-Dichlorobenzene	ND		0.00547	5	08/16/2015 11:28	WG809075
1,3-Dichlorobenzene	ND		0.00547	5	08/16/2015 11:28	WG809075
1,4-Dichlorobenzene	ND		0.00547	5	08/16/2015 11:28	WG809075
Dichlorodifluoromethane	ND		0.0274	5	08/16/2015 11:28	WG809075
1,1-Dichloroethane	ND		0.00547	5	08/16/2015 11:28	WG809075
1,2-Dichloroethane	ND		0.00547	5	08/16/2015 11:28	WG809075
1,1-Dichloroethene	ND		0.00547	5	08/16/2015 11:28	WG809075
cis-1,2-Dichloroethene	ND		0.00547	5	08/16/2015 11:28	WG809075
trans-1,2-Dichloroethene	ND		0.00547	5	08/16/2015 11:28	WG809075
1,2-Dichloropropane	ND		0.00547	5	08/16/2015 11:28	WG809075
1,1-Dichloropropene	ND		0.00547	5	08/16/2015 11:28	WG809075

Volatile Organic Compounds (GC/MS) by Method 8260B

Analyte	Result (dry) mg/kg	Qualifier	RDL (dry) mg/kg	Dilution	Analysis date / time	Batch
1,3-Dichloropropane	ND		0.00547	5	08/16/2015 11:28	WG809075
cis-1,3-Dichloropropene	ND		0.00547	5	08/16/2015 11:28	WG809075
trans-1,3-Dichloropropene	ND		0.00547	5	08/16/2015 11:28	WG809075
2,2-Dichloropropane	ND		0.00547	5	08/16/2015 11:28	WG809075
Dicyclopentadiene	ND		0.00547	5	08/16/2015 11:28	WG809075
Di-isopropyl ether	ND		0.00547	5	08/16/2015 11:28	WG809075
Ethylbenzene	ND		0.00547	5	08/16/2015 11:28	WG809075
Hexachloro-1,3-butadiene	ND		0.00547	5	08/16/2015 11:28	WG809075
Isopropylbenzene	ND		0.00547	5	08/16/2015 11:28	WG809075
p-Isopropyltoluene	ND		0.00547	5	08/16/2015 11:28	WG809075
2-Butanone (MEK)	ND		0.0547	5	08/16/2015 11:28	WG809075
Methylene Chloride	ND		0.0274	5	08/16/2015 11:28	WG809075
4-Methyl-2-pentanone (MIBK)	ND		0.0547	5	08/16/2015 11:28	WG809075
Methyl tert-butyl ether	ND		0.00547	5	08/16/2015 11:28	WG809075
Naphthalene	ND		0.0274	5	08/16/2015 11:28	WG809075
n-Propylbenzene	ND		0.00547	5	08/16/2015 11:28	WG809075
Styrene	ND		0.00547	5	08/16/2015 11:28	WG809075
1,1,1,2-Tetrachloroethane	ND		0.00547	5	08/16/2015 11:28	WG809075
1,1,2,2-Tetrachloroethane	ND		0.00547	5	08/16/2015 11:28	WG809075
1,1,2-Trichlorotrifluoroethane	ND		0.00547	5	08/16/2015 11:28	WG809075
Tetrachloroethene	ND		0.00547	5	08/16/2015 11:28	WG809075
Toluene	ND		0.0274	5	08/16/2015 11:28	WG809075
1,2,3-Trichlorobenzene	ND		0.00547	5	08/16/2015 11:28	WG809075
1,2,4-Trichlorobenzene	ND		0.00547	5	08/16/2015 11:28	WG809075
1,1,1-Trichloroethane	ND		0.00547	5	08/16/2015 11:28	WG809075
1,1,2-Trichloroethane	ND		0.00547	5	08/16/2015 11:28	WG809075
Trichloroethene	ND		0.00547	5	08/16/2015 11:28	WG809075
Trichlorofluoromethane	ND		0.0274	5	08/16/2015 11:28	WG809075
1,2,3-Trichloropropane	ND		0.0137	5	08/16/2015 11:28	WG809075
1,2,4-Trimethylbenzene	ND		0.00547	5	08/16/2015 11:28	WG809075
1,2,3-Trimethylbenzene	ND		0.00547	5	08/16/2015 11:28	WG809075
1,3,5-Trimethylbenzene	ND		0.00547	5	08/16/2015 11:28	WG809075
Vinyl chloride	ND		0.00547	5	08/16/2015 11:28	WG809075
Xylenes, Total	ND		0.0164	5	08/16/2015 11:28	WG809075
(S) Toluene-d8	*99.5*		*88.7-115*		*08/16/2015 11:28*	WG809075
(S) Dibromofluoromethane	*95.2*		*76.3-123*		*08/16/2015 11:28*	WG809075
(S) 4-Bromofluorobenzene	*98.3*		*69.7-129*		*08/16/2015 11:28*	WG809075

Semi Volatile Organic Compounds (GC/MS) by Method 8270C

Analyte	Result (dry) mg/kg	Qualifier	RDL (dry) mg/kg	Dilution	Analysis date / time	Batch
Acenaphthene	ND		0.0361	1	08/17/2015 13:35	WG809054
Acenaphthylene	ND		0.0361	1	08/17/2015 13:35	WG809054
Anthracene	ND		0.0361	1	08/17/2015 13:35	WG809054
Benzidine	ND		0.364	1	08/17/2015 13:35	WG809054
Benzo(a)anthracene	ND		0.0361	1	08/17/2015 13:35	WG809054
Benzo(b)fluoranthene	ND		0.0361	1	08/17/2015 13:35	WG809054
Benzo(k)fluoranthene	ND		0.0361	1	08/17/2015 13:35	WG809054
Benzo(g,h,i)perylene	ND		0.0361	1	08/17/2015 13:35	WG809054
Benzo(a)pyrene	ND		0.0361	1	08/17/2015 13:35	WG809054
Bis(2-chlorethoxy)methane	ND		0.364	1	08/17/2015 13:35	WG809054
Bis(2-chloroethyl)ether	ND		0.364	1	08/17/2015 13:35	WG809054
Bis(2-chloroisopropyl)ether	ND		0.364	1	08/17/2015 13:35	WG809054
4-Bromophenyl-phenylether	ND		0.364	1	08/17/2015 13:35	WG809054
2-Chloronaphthalene	ND		0.0361	1	08/17/2015 13:35	WG809054
4-Chlorophenyl-phenylether	ND		0.364	1	08/17/2015 13:35	WG809054

Semi Volatile Organic Compounds (GC/MS) by Method 8270C

Analyte	Result (dry) mg/kg	Qualifier	RDL (dry) mg/kg	Dilution	Analysis date / time	Batch
Chrysene	ND		0.0361	1	08/17/2015 13:35	WG809054
Dibenz(a,h)anthracene	ND		0.0361	1	08/17/2015 13:35	WG809054
3,3-Dichlorobenzidine	ND		0.364	1	08/17/2015 13:35	WG809054
2,4-Dinitrotoluene	ND		0.364	1	08/17/2015 13:35	WG809054
2,6-Dinitrotoluene	ND		0.364	1	08/17/2015 13:35	WG809054
Fluoranthene	ND		0.0361	1	08/17/2015 13:35	WG809054
Fluorene	ND		0.0361	1	08/17/2015 13:35	WG809054
Hexachlorobenzene	ND		0.364	1	08/17/2015 13:35	WG809054
Hexachloro-1,3-butadiene	ND		0.364	1	08/17/2015 13:35	WG809054
Hexachlorocyclopentadiene	ND		0.364	1	08/17/2015 13:35	WG809054
Hexachloroethane	ND		0.364	1	08/17/2015 13:35	WG809054
Indeno(1,2,3-cd)pyrene	ND		0.0361	1	08/17/2015 13:35	WG809054
Isophorone	ND		0.364	1	08/17/2015 13:35	WG809054
Naphthalene	0.130		0.0361	1	08/17/2015 13:35	WG809054
Nitrobenzene	ND		0.364	1	08/17/2015 13:35	WG809054
n-Nitrosodimethylamine	ND		0.364	1	08/17/2015 13:35	WG809054
n-Nitrosodiphenylamine	ND		0.364	1	08/17/2015 13:35	WG809054
n-Nitrosodi-n-propylamine	ND		0.364	1	08/17/2015 13:35	WG809054
Phenanthrene	ND		0.0361	1	08/17/2015 13:35	WG809054
Benzylbutyl phthalate	ND		0.364	1	08/17/2015 13:35	WG809054
Bis(2-ethylhexyl)phthalate	ND		0.364	1	08/17/2015 13:35	WG809054
Di-n-butyl phthalate	ND		0.364	1	08/17/2015 13:35	WG809054
Diethyl phthalate	ND		0.364	1	08/17/2015 13:35	WG809054
Dimethyl phthalate	ND		0.364	1	08/17/2015 13:35	WG809054
Di-n-octyl phthalate	ND		0.364	1	08/17/2015 13:35	WG809054
Pyrene	ND		0.0361	1	08/17/2015 13:35	WG809054
1,2,4-Trichlorobenzene	ND		0.364	1	08/17/2015 13:35	WG809054
4-Chloro-3-methylphenol	ND		0.364	1	08/17/2015 13:35	WG809054
2-Chlorophenol	ND	J3	0.364	1	08/17/2015 13:35	WG809054
2,4-Dichlorophenol	ND		0.364	1	08/17/2015 13:35	WG809054
2,4-Dimethylphenol	ND		0.364	1	08/17/2015 13:35	WG809054
4,6-Dinitro-2-methylphenol	ND		0.364	1	08/17/2015 13:35	WG809054
2,4-Dinitrophenol	ND		0.364	1	08/17/2015 13:35	WG809054
2-Nitrophenol	ND		0.364	1	08/17/2015 13:35	WG809054
4-Nitrophenol	ND		0.364	1	08/17/2015 13:35	WG809054
Pentachlorophenol	ND	J3	0.364	1	08/17/2015 13:35	WG809054
Phenol	ND		0.364	1	08/17/2015 13:35	WG809054
2,4,6-Trichlorophenol	ND		0.364	1	08/17/2015 13:35	WG809054
(S) 2-Fluorophenol	*73.4*		*21.1-116*		*08/17/2015 13:35*	WG809054
(S) Phenol-d5	*78.0*		*26.3-121*		*08/17/2015 13:35*	WG809054
(S) Nitrobenzene-d5	*80.9*		*21.9-129*		*08/17/2015 13:35*	WG809054
(S) 2-Fluorobiphenyl	*75.5*		*34.9-129*		*08/17/2015 13:35*	WG809054
(S) 2,4,6-Tribromophenol	*83.9*		*21.6-142*		*08/17/2015 13:35*	WG809054
(S) p-Terphenyl-d14	*62.0*		*21.5-128*		*08/17/2015 13:35*	WG809054

Total Solids by Method 2540 G-2011

Analyte	Result %	Qualifier	Dilution	Analysis date / time	Batch
Total Solids	89.1		1	08/15/2015 08:44	WG809040

Volatile Organic Compounds (GC/MS) by Method 8260B

Analyte	Result (dry) mg/kg	Qualifier	RDL (dry) mg/kg	Dilution	Analysis date / time	Batch
Acetone	ND		0.281	5	08/14/2015 16:21	WG809088
Acrylonitrile	ND		0.0561	5	08/14/2015 16:21	WG809088
Benzene	ND		0.00561	5	08/14/2015 16:21	WG809088
Bromobenzene	ND		0.00561	5	08/14/2015 16:21	WG809088
Bromodichloromethane	ND		0.00561	5	08/14/2015 16:21	WG809088
Bromoform	ND		0.00561	5	08/14/2015 16:21	WG809088
Bromomethane	ND		0.0281	5	08/14/2015 16:21	WG809088
n-Butylbenzene	ND		0.00561	5	08/14/2015 16:21	WG809088
sec-Butylbenzene	ND		0.00561	5	08/14/2015 16:21	WG809088
tert-Butylbenzene	ND		0.00561	5	08/14/2015 16:21	WG809088
Carbon tetrachloride	ND		0.00561	5	08/14/2015 16:21	WG809088
Chlorobenzene	ND		0.00561	5	08/14/2015 16:21	WG809088
Chlorodibromomethane	ND		0.00561	5	08/14/2015 16:21	WG809088
Chloroethane	ND		0.0281	5	08/14/2015 16:21	WG809088
2-Chloroethyl vinyl ether	ND		0.281	5	08/14/2015 16:21	WG809088
Chloroform	ND		0.0281	5	08/14/2015 16:21	WG809088
Chloromethane	ND		0.0140	5	08/14/2015 16:21	WG809088
2-Chlorotoluene	ND		0.00561	5	08/14/2015 16:21	WG809088
4-Chlorotoluene	ND		0.00561	5	08/14/2015 16:21	WG809088
1,2-Dibromo-3-Chloropropane	ND		0.0281	5	08/14/2015 16:21	WG809088
1,2-Dibromoethane	ND		0.00561	5	08/14/2015 16:21	WG809088
Dibromomethane	ND		0.00561	5	08/14/2015 16:21	WG809088
1,2-Dichlorobenzene	ND		0.00561	5	08/14/2015 16:21	WG809088
1,3-Dichlorobenzene	ND		0.00561	5	08/14/2015 16:21	WG809088
1,4-Dichlorobenzene	ND		0.00561	5	08/14/2015 16:21	WG809088
Dichlorodifluoromethane	ND		0.0281	5	08/14/2015 16:21	WG809088
1,1-Dichloroethane	ND		0.00561	5	08/14/2015 16:21	WG809088
1,2-Dichloroethane	ND		0.00561	5	08/14/2015 16:21	WG809088
1,1-Dichloroethene	ND		0.00561	5	08/14/2015 16:21	WG809088
cis-1,2-Dichloroethene	ND		0.00561	5	08/14/2015 16:21	WG809088
trans-1,2-Dichloroethene	ND		0.00561	5	08/14/2015 16:21	WG809088
1,2-Dichloropropane	ND		0.00561	5	08/14/2015 16:21	WG809088
1,1-Dichloropropene	ND		0.00561	5	08/14/2015 16:21	WG809088
1,3-Dichloropropane	ND		0.00561	5	08/14/2015 16:21	WG809088
cis-1,3-Dichloropropene	ND		0.00561	5	08/14/2015 16:21	WG809088
trans-1,3-Dichloropropene	ND		0.00561	5	08/14/2015 16:21	WG809088
2,2-Dichloropropane	ND		0.00561	5	08/14/2015 16:21	WG809088
Dicyclopentadiene	ND		0.00561	5	08/14/2015 16:21	WG809088
Di-isopropyl ether	ND	J4	0.00561	5	08/14/2015 16:21	WG809088
Ethylbenzene	ND		0.00561	5	08/14/2015 16:21	WG809088
Hexachloro-1,3-butadiene	ND		0.00561	5	08/14/2015 16:21	WG809088
Isopropylbenzene	ND		0.00561	5	08/14/2015 16:21	WG809088
p-Isopropyltoluene	ND		0.00561	5	08/14/2015 16:21	WG809088
2-Butanone (MEK)	ND		0.0561	5	08/14/2015 16:21	WG809088
Methylene Chloride	ND		0.0281	5	08/14/2015 16:21	WG809088
4-Methyl-2-pentanone (MIBK)	ND		0.0561	5	08/14/2015 16:21	WG809088
Methyl tert-butyl ether	ND		0.00561	5	08/14/2015 16:21	WG809088
Naphthalene	ND		0.0281	5	08/14/2015 16:21	WG809088
n-Propylbenzene	ND		0.00561	5	08/14/2015 16:21	WG809088
Styrene	ND		0.00561	5	08/14/2015 16:21	WG809088

Volatile Organic Compounds (GC/MS) by Method 8260B

Analyte	Result (dry) mg/kg	Qualifier	RDL (dry) mg/kg	Dilution	Analysis date / time	Batch
1,1,1,2-Tetrachloroethane	ND		0.00561	5	08/14/2015 16:21	WG809088
1,1,2,2-Tetrachloroethane	ND		0.00561	5	08/14/2015 16:21	WG809088
1,1,2-Trichlorotrifluoroethane	ND		0.00561	5	08/14/2015 16:21	WG809088
Tetrachloroethene	ND		0.00561	5	08/14/2015 16:21	WG809088
Toluene	ND		0.0281	5	08/14/2015 16:21	WG809088
1,2,3-Trichlorobenzene	ND		0.00561	5	08/14/2015 16:21	WG809088
1,2,4-Trichlorobenzene	ND		0.00561	5	08/14/2015 16:21	WG809088
1,1,1-Trichloroethane	ND		0.00561	5	08/14/2015 16:21	WG809088
1,1,2-Trichloroethane	ND		0.00561	5	08/14/2015 16:21	WG809088
Trichloroethene	ND		0.00561	5	08/14/2015 16:21	WG809088
Trichlorofluoromethane	ND		0.0281	5	08/14/2015 16:21	WG809088
1,2,3-Trichloropropane	ND		0.0140	5	08/14/2015 16:21	WG809088
1,2,4-Trimethylbenzene	ND		0.00561	5	08/14/2015 16:21	WG809088
1,2,3-Trimethylbenzene	ND		0.00561	5	08/14/2015 16:21	WG809088
1,3,5-Trimethylbenzene	ND		0.00561	5	08/14/2015 16:21	WG809088
Vinyl chloride	ND		0.00561	5	08/14/2015 16:21	WG809088
Xylenes, Total	ND		0.0168	5	08/14/2015 16:21	WG809088
(S) Toluene-d8	*100*		*88.7-115*		*08/14/2015 16:21*	WG809088
(S) Dibromofluoromethane	*101*		*76.3-123*		*08/14/2015 16:21*	WG809088
(S) 4-Bromofluorobenzene	*90.3*		*69.7-129*		*08/14/2015 16:21*	WG809088

Semi Volatile Organic Compounds (GC/MS) by Method 8270C

Analyte	Result (dry) mg/kg	Qualifier	RDL (dry) mg/kg	Dilution	Analysis date / time	Batch
Acenaphthene	ND		0.0370	1	08/17/2015 14:00	WG809054
Acenaphthylene	ND		0.0370	1	08/17/2015 14:00	WG809054
Anthracene	ND		0.0370	1	08/17/2015 14:00	WG809054
Benzidine	ND		0.374	1	08/17/2015 14:00	WG809054
Benzo(a)anthracene	ND		0.0370	1	08/17/2015 14:00	WG809054
Benzo(b)fluoranthene	ND		0.0370	1	08/17/2015 14:00	WG809054
Benzo(k)fluoranthene	ND		0.0370	1	08/17/2015 14:00	WG809054
Benzo(g,h,i)perylene	ND		0.0370	1	08/17/2015 14:00	WG809054
Benzo(a)pyrene	ND		0.0370	1	08/17/2015 14:00	WG809054
Bis(2-chlorethoxy)methane	ND		0.374	1	08/17/2015 14:00	WG809054
Bis(2-chloroethyl)ether	ND		0.374	1	08/17/2015 14:00	WG809054
Bis(2-chloroisopropyl)ether	ND		0.374	1	08/17/2015 14:00	WG809054
4-Bromophenyl-phenylether	ND		0.374	1	08/17/2015 14:00	WG809054
2-Chloronaphthalene	ND		0.0370	1	08/17/2015 14:00	WG809054
4-Chlorophenyl-phenylether	ND		0.374	1	08/17/2015 14:00	WG809054
Chrysene	ND		0.0370	1	08/17/2015 14:00	WG809054
Dibenz(a,h)anthracene	ND		0.0370	1	08/17/2015 14:00	WG809054
3,3-Dichlorobenzidine	ND		0.374	1	08/17/2015 14:00	WG809054
2,4-Dinitrotoluene	ND		0.374	1	08/17/2015 14:00	WG809054
2,6-Dinitrotoluene	ND		0.374	1	08/17/2015 14:00	WG809054
Fluoranthene	ND		0.0370	1	08/17/2015 14:00	WG809054
Fluorene	ND		0.0370	1	08/17/2015 14:00	WG809054
Hexachlorobenzene	ND		0.374	1	08/17/2015 14:00	WG809054
Hexachloro-1,3-butadiene	ND		0.374	1	08/17/2015 14:00	WG809054
Hexachlorocyclopentadiene	ND		0.374	1	08/17/2015 14:00	WG809054
Hexachloroethane	ND		0.374	1	08/17/2015 14:00	WG809054
Indeno(1,2,3-cd)pyrene	ND		0.0370	1	08/17/2015 14:00	WG809054
Isophorone	ND		0.374	1	08/17/2015 14:00	WG809054
Naphthalene	ND		0.0370	1	08/17/2015 14:00	WG809054
Nitrobenzene	ND		0.374	1	08/17/2015 14:00	WG809054
n-Nitrosodimethylamine	ND		0.374	1	08/17/2015 14:00	WG809054
n-Nitrosodiphenylamine	ND		0.374	1	08/17/2015 14:00	WG809054

Semi Volatile Organic Compounds (GC/MS) by Method 8270C

Analyte	Result (dry) mg/kg	Qualifier	RDL (dry) mg/kg	Dilution	Analysis date / time	Batch
n-Nitrosodi-n-propylamine	ND		0.374	1	08/17/2015 14:00	WG809054
Phenanthrene	ND		0.0370	1	08/17/2015 14:00	WG809054
Benzylbutyl phthalate	ND		0.374	1	08/17/2015 14:00	WG809054
Bis(2-ethylhexyl)phthalate	ND		0.374	1	08/17/2015 14:00	WG809054
Di-n-butyl phthalate	ND		0.374	1	08/17/2015 14:00	WG809054
Diethyl phthalate	ND		0.374	1	08/17/2015 14:00	WG809054
Dimethyl phthalate	ND		0.374	1	08/17/2015 14:00	WG809054
Di-n-octyl phthalate	ND		0.374	1	08/17/2015 14:00	WG809054
Pyrene	ND		0.0370	1	08/17/2015 14:00	WG809054
1,2,4-Trichlorobenzene	ND		0.374	1	08/17/2015 14:00	WG809054
4-Chloro-3-methylphenol	ND		0.374	1	08/17/2015 14:00	WG809054
2-Chlorophenol	ND	J3	0.374	1	08/17/2015 14:00	WG809054
2,4-Dichlorophenol	ND		0.374	1	08/17/2015 14:00	WG809054
2,4-Dimethylphenol	ND		0.374	1	08/17/2015 14:00	WG809054
4,6-Dinitro-2-methylphenol	ND		0.374	1	08/17/2015 14:00	WG809054
2,4-Dinitrophenol	ND		0.374	1	08/17/2015 14:00	WG809054
2-Nitrophenol	ND		0.374	1	08/17/2015 14:00	WG809054
4-Nitrophenol	ND		0.374	1	08/17/2015 14:00	WG809054
Pentachlorophenol	ND	J3	0.374	1	08/17/2015 14:00	WG809054
Phenol	ND		0.374	1	08/17/2015 14:00	WG809054
2,4,6-Trichlorophenol	ND		0.374	1	08/17/2015 14:00	WG809054
(S) 2-Fluorophenol	*67.4*		*21.1-116*		*08/17/2015 14:00*	WG809054
(S) Phenol-d5	*68.8*		*26.3-121*		*08/17/2015 14:00*	WG809054
(S) Nitrobenzene-d5	*68.7*		*21.9-129*		*08/17/2015 14:00*	WG809054
(S) 2-Fluorobiphenyl	*67.8*		*34.9-129*		*08/17/2015 14:00*	WG809054
(S) 2,4,6-Tribromophenol	*76.3*		*21.6-142*		*08/17/2015 14:00*	WG809054
(S) p-Terphenyl-d14	*61.4*		*21.5-128*		*08/17/2015 14:00*	WG809054

Total Solids by Method 2540 G-2011

Analyte	Result %	Qualifier	Dilution	Analysis date / time	Batch
Total Solids	90.3		1	08/15/2015 08:45	WG809040

Mercury by Method 7471A

Analyte	Result (dry) mg/kg	Qualifier	RDL (dry) mg/kg	Dilution	Analysis date / time	Batch
Mercury	ND		0.0221	1	08/15/2015 10:11	WG809114

Metals (ICP) by Method 6010B

Analyte	Result (dry) mg/kg	Qualifier	RDL (dry) mg/kg	Dilution	Analysis date / time	Batch
Arsenic	16.7		2.21	1	08/14/2015 16:28	WG809022
Barium	59.9		0.553	1	08/14/2015 16:28	WG809022
Cadmium	ND		0.553	1	08/14/2015 16:28	WG809022
Chromium	134		1.11	1	08/14/2015 16:28	WG809022
Lead	6.30		0.553	1	08/14/2015 16:28	WG809022
Selenium	ND		2.21	1	08/14/2015 16:28	WG809022
Silver	ND		1.11	1	08/14/2015 16:28	WG809022

Volatile Organic Compounds (GC/MS) by Method 8260B

Analyte	Result (dry) mg/kg	Qualifier	RDL (dry) mg/kg	Dilution	Analysis date / time	Batch
Acetone	ND		0.277	5	08/14/2015 16:44	WG809088
Acrylonitrile	ND		0.0553	5	08/14/2015 16:44	WG809088
Benzene	ND		0.00553	5	08/14/2015 16:44	WG809088
Bromobenzene	ND		0.00553	5	08/14/2015 16:44	WG809088
Bromodichloromethane	ND		0.00553	5	08/14/2015 16:44	WG809088
Bromoform	ND		0.00553	5	08/14/2015 16:44	WG809088
Bromomethane	ND		0.0277	5	08/14/2015 16:44	WG809088
n-Butylbenzene	ND		0.00553	5	08/14/2015 16:44	WG809088
sec-Butylbenzene	ND		0.00553	5	08/14/2015 16:44	WG809088
tert-Butylbenzene	ND		0.00553	5	08/14/2015 16:44	WG809088
Carbon tetrachloride	ND		0.00553	5	08/14/2015 16:44	WG809088
Chlorobenzene	ND		0.00553	5	08/14/2015 16:44	WG809088
Chlorodibromomethane	ND		0.00553	5	08/14/2015 16:44	WG809088
Chloroethane	ND		0.0277	5	08/14/2015 16:44	WG809088
2-Chloroethyl vinyl ether	ND		0.277	5	08/14/2015 16:44	WG809088
Chloroform	ND		0.0277	5	08/14/2015 16:44	WG809088
Chloromethane	ND		0.0138	5	08/14/2015 16:44	WG809088
2-Chlorotoluene	ND		0.00553	5	08/14/2015 16:44	WG809088
4-Chlorotoluene	ND		0.00553	5	08/14/2015 16:44	WG809088
1,2-Dibromo-3-Chloropropane	ND		0.0277	5	08/14/2015 16:44	WG809088
1,2-Dibromoethane	ND		0.00553	5	08/14/2015 16:44	WG809088
Dibromomethane	ND		0.00553	5	08/14/2015 16:44	WG809088
1,2-Dichlorobenzene	ND		0.00553	5	08/14/2015 16:44	WG809088
1,3-Dichlorobenzene	ND		0.00553	5	08/14/2015 16:44	WG809088
1,4-Dichlorobenzene	ND		0.00553	5	08/14/2015 16:44	WG809088
Dichlorodifluoromethane	ND		0.0277	5	08/14/2015 16:44	WG809088
1,1-Dichloroethane	ND		0.00553	5	08/14/2015 16:44	WG809088
1,2-Dichloroethane	ND		0.00553	5	08/14/2015 16:44	WG809088
1,1-Dichloroethene	ND		0.00553	5	08/14/2015 16:44	WG809088
cis-1,2-Dichloroethene	ND		0.00553	5	08/14/2015 16:44	WG809088
trans-1,2-Dichloroethene	ND		0.00553	5	08/14/2015 16:44	WG809088
1,2-Dichloropropane	ND		0.00553	5	08/14/2015 16:44	WG809088
1,1-Dichloropropene	ND		0.00553	5	08/14/2015 16:44	WG809088

Volatile Organic Compounds (GC/MS) by Method 8260B

Analyte	Result (dry) mg/kg	Qualifier	RDL (dry) mg/kg	Dilution	Analysis date / time	Batch
1,3-Dichloropropane	ND		0.00553	5	08/14/2015 16:44	WG809088
cis-1,3-Dichloropropene	ND		0.00553	5	08/14/2015 16:44	WG809088
trans-1,3-Dichloropropene	ND		0.00553	5	08/14/2015 16:44	WG809088
2,2-Dichloropropane	ND		0.00553	5	08/14/2015 16:44	WG809088
Dicyclopentadiene	ND		0.00553	5	08/14/2015 16:44	WG809088
Di-isopropyl ether	ND	J4	0.00553	5	08/14/2015 16:44	WG809088
Ethylbenzene	ND		0.00553	5	08/14/2015 16:44	WG809088
Hexachloro-1,3-butadiene	ND		0.00553	5	08/14/2015 16:44	WG809088
Isopropylbenzene	ND		0.00553	5	08/14/2015 16:44	WG809088
p-Isopropyltoluene	ND		0.00553	5	08/14/2015 16:44	WG809088
2-Butanone (MEK)	ND		0.0553	5	08/14/2015 16:44	WG809088
Methylene Chloride	ND		0.0277	5	08/14/2015 16:44	WG809088
4-Methyl-2-pentanone (MIBK)	ND		0.0553	5	08/14/2015 16:44	WG809088
Methyl tert-butyl ether	ND		0.00553	5	08/14/2015 16:44	WG809088
Naphthalene	ND		0.0277	5	08/14/2015 16:44	WG809088
n-Propylbenzene	ND		0.00553	5	08/14/2015 16:44	WG809088
Styrene	ND		0.00553	5	08/14/2015 16:44	WG809088
1,1,1,2-Tetrachloroethane	ND		0.00553	5	08/14/2015 16:44	WG809088
1,1,2,2-Tetrachloroethane	ND		0.00553	5	08/14/2015 16:44	WG809088
1,1,2-Trichlorotrifluoroethane	ND		0.00553	5	08/14/2015 16:44	WG809088
Tetrachloroethene	ND		0.00553	5	08/14/2015 16:44	WG809088
Toluene	ND		0.0277	5	08/14/2015 16:44	WG809088
1,2,3-Trichlorobenzene	ND		0.00553	5	08/14/2015 16:44	WG809088
1,2,4-Trichlorobenzene	ND		0.00553	5	08/14/2015 16:44	WG809088
1,1,1-Trichloroethane	ND		0.00553	5	08/14/2015 16:44	WG809088
1,1,2-Trichloroethane	ND		0.00553	5	08/14/2015 16:44	WG809088
Trichloroethene	ND		0.00553	5	08/14/2015 16:44	WG809088
Trichlorofluoromethane	ND		0.0277	5	08/14/2015 16:44	WG809088
1,2,3-Trichloropropane	ND		0.0138	5	08/14/2015 16:44	WG809088
1,2,4-Trimethylbenzene	ND		0.00553	5	08/14/2015 16:44	WG809088
1,2,3-Trimethylbenzene	ND		0.00553	5	08/14/2015 16:44	WG809088
1,3,5-Trimethylbenzene	ND		0.00553	5	08/14/2015 16:44	WG809088
Vinyl chloride	ND		0.00553	5	08/14/2015 16:44	WG809088
Xylenes, Total	ND		0.0166	5	08/14/2015 16:44	WG809088
(S) Toluene-d8	*99.2*		*88.7-115*		*08/14/2015 16:44*	WG809088
(S) Dibromofluoromethane	*101*		*76.3-123*		*08/14/2015 16:44*	WG809088
(S) 4-Bromofluorobenzene	*87.1*		*69.7-129*		*08/14/2015 16:44*	WG809088

Semi Volatile Organic Compounds (GC/MS) by Method 8270C

Analyte	Result (dry) mg/kg	Qualifier	RDL (dry) mg/kg	Dilution	Analysis date / time	Batch
Acenaphthene	ND		0.365	10	08/17/2015 16:03	WG809054
Acenaphthylene	ND		0.365	10	08/17/2015 16:03	WG809054
Anthracene	ND		0.365	10	08/17/2015 16:03	WG809054
Benzidine	ND		3.69	10	08/17/2015 16:03	WG809054
Benzo(a)anthracene	ND		0.365	10	08/17/2015 16:03	WG809054
Benzo(b)fluoranthene	ND		0.365	10	08/17/2015 16:03	WG809054
Benzo(k)fluoranthene	ND		0.365	10	08/17/2015 16:03	WG809054
Benzo(g,h,i)perylene	ND		0.365	10	08/17/2015 16:03	WG809054
Benzo(a)pyrene	ND		0.365	10	08/17/2015 16:03	WG809054
Bis(2-chlorethoxy)methane	ND		3.69	10	08/17/2015 16:03	WG809054
Bis(2-chloroethyl)ether	ND		3.69	10	08/17/2015 16:03	WG809054
Bis(2-chloroisopropyl)ether	ND		3.69	10	08/17/2015 16:03	WG809054
4-Bromophenyl-phenylether	ND		3.69	10	08/17/2015 16:03	WG809054
2-Chloronaphthalene	ND		0.365	10	08/17/2015 16:03	WG809054
4-Chlorophenyl-phenylether	ND		3.69	10	08/17/2015 16:03	WG809054

Semi Volatile Organic Compounds (GC/MS) by Method 8270C

Analyte	Result (dry) mg/kg	Qualifier	RDL (dry) mg/kg	Dilution	Analysis date / time	Batch
Chrysene	ND		0.365	10	08/17/2015 16:03	WG809054
Dibenz(a,h)anthracene	ND		0.365	10	08/17/2015 16:03	WG809054
3,3-Dichlorobenzidine	ND		3.69	10	08/17/2015 16:03	WG809054
2,4-Dinitrotoluene	ND		3.69	10	08/17/2015 16:03	WG809054
2,6-Dinitrotoluene	ND		3.69	10	08/17/2015 16:03	WG809054
Fluoranthene	ND		0.365	10	08/17/2015 16:03	WG809054
Fluorene	ND		0.365	10	08/17/2015 16:03	WG809054
Hexachlorobenzene	ND		3.69	10	08/17/2015 16:03	WG809054
Hexachloro-1,3-butadiene	ND		3.69	10	08/17/2015 16:03	WG809054
Hexachlorocyclopentadiene	ND		3.69	10	08/17/2015 16:03	WG809054
Hexachloroethane	ND		3.69	10	08/17/2015 16:03	WG809054
Indeno(1,2,3-cd)pyrene	ND		0.365	10	08/17/2015 16:03	WG809054
Isophorone	ND		3.69	10	08/17/2015 16:03	WG809054
Naphthalene	ND		0.365	10	08/17/2015 16:03	WG809054
Nitrobenzene	ND		3.69	10	08/17/2015 16:03	WG809054
n-Nitrosodimethylamine	ND		3.69	10	08/17/2015 16:03	WG809054
n-Nitrosodiphenylamine	ND		3.69	10	08/17/2015 16:03	WG809054
n-Nitrosodi-n-propylamine	ND		3.69	10	08/17/2015 16:03	WG809054
Phenanthrene	ND		0.365	10	08/17/2015 16:03	WG809054
Benzylbutyl phthalate	ND		3.69	10	08/17/2015 16:03	WG809054
Bis(2-ethylhexyl)phthalate	ND		3.69	10	08/17/2015 16:03	WG809054
Di-n-butyl phthalate	ND		3.69	10	08/17/2015 16:03	WG809054
Diethyl phthalate	ND		3.69	10	08/17/2015 16:03	WG809054
Dimethyl phthalate	ND		3.69	10	08/17/2015 16:03	WG809054
Di-n-octyl phthalate	ND		3.69	10	08/17/2015 16:03	WG809054
Pyrene	ND		0.365	10	08/17/2015 16:03	WG809054
1,2,4-Trichlorobenzene	ND		3.69	10	08/17/2015 16:03	WG809054
4-Chloro-3-methylphenol	ND		3.69	10	08/17/2015 16:03	WG809054
2-Chlorophenol	ND	J3	3.69	10	08/17/2015 16:03	WG809054
2,4-Dichlorophenol	ND		3.69	10	08/17/2015 16:03	WG809054
2,4-Dimethylphenol	ND		3.69	10	08/17/2015 16:03	WG809054
4,6-Dinitro-2-methylphenol	ND		3.69	10	08/17/2015 16:03	WG809054
2,4-Dinitrophenol	ND		3.69	10	08/17/2015 16:03	WG809054
2-Nitrophenol	ND		3.69	10	08/17/2015 16:03	WG809054
4-Nitrophenol	ND		3.69	10	08/17/2015 16:03	WG809054
Pentachlorophenol	ND	J3	3.69	10	08/17/2015 16:03	WG809054
Phenol	ND		3.69	10	08/17/2015 16:03	WG809054
2,4,6-Trichlorophenol	ND		3.69	10	08/17/2015 16:03	WG809054
(S) 2-Fluorophenol	*82.6*		*21.1-116*		*08/17/2015 16:03*	WG809054
(S) Phenol-d5	*89.6*		*26.3-121*		*08/17/2015 16:03*	WG809054
(S) Nitrobenzene-d5	*82.5*		*21.9-129*		*08/17/2015 16:03*	WG809054
(S) 2-Fluorobiphenyl	*82.6*		*34.9-129*		*08/17/2015 16:03*	WG809054
(S) 2,4,6-Tribromophenol	*75.6*		*21.6-142*		*08/17/2015 16:03*	WG809054
(S) p-Terphenyl-d14	*65.1*		*21.5-128*		*08/17/2015 16:03*	WG809054

Sample Narrative:

8270C L782656-07 WG809054: Cannot run at lower dilution due to viscosity of extract

Total Solids by Method 2540 G-2011

Analyte	Result %	Qualifier	Dilution	Analysis date / time	Batch
Total Solids	89.0		1	08/15/2015 08:45	WG809040

Volatile Organic Compounds (GC/MS) by Method 8260B

Analyte	Result (dry) mg/kg	Qualifier	RDL (dry) mg/kg	Dilution	Analysis date / time	Batch
Acetone	ND		0.281	5	08/14/2015 17:07	WG809088
Acrylonitrile	ND		0.0562	5	08/14/2015 17:07	WG809088
Benzene	ND		0.00562	5	08/14/2015 17:07	WG809088
Bromobenzene	ND		0.00562	5	08/14/2015 17:07	WG809088
Bromodichloromethane	ND		0.00562	5	08/14/2015 17:07	WG809088
Bromoform	ND		0.00562	5	08/14/2015 17:07	WG809088
Bromomethane	ND		0.0281	5	08/14/2015 17:07	WG809088
n-Butylbenzene	ND		0.00562	5	08/14/2015 17:07	WG809088
sec-Butylbenzene	ND		0.00562	5	08/14/2015 17:07	WG809088
tert-Butylbenzene	ND		0.00562	5	08/14/2015 17:07	WG809088
Carbon tetrachloride	ND		0.00562	5	08/14/2015 17:07	WG809088
Chlorobenzene	ND		0.00562	5	08/14/2015 17:07	WG809088
Chlorodibromomethane	ND		0.00562	5	08/14/2015 17:07	WG809088
Chloroethane	ND		0.0281	5	08/14/2015 17:07	WG809088
2-Chloroethyl vinyl ether	ND		0.281	5	08/14/2015 17:07	WG809088
Chloroform	ND		0.0281	5	08/14/2015 17:07	WG809088
Chloromethane	ND		0.0140	5	08/14/2015 17:07	WG809088
2-Chlorotoluene	ND		0.00562	5	08/14/2015 17:07	WG809088
4-Chlorotoluene	ND		0.00562	5	08/14/2015 17:07	WG809088
1,2-Dibromo-3-Chloropropane	ND		0.0281	5	08/14/2015 17:07	WG809088
1,2-Dibromoethane	ND		0.00562	5	08/14/2015 17:07	WG809088
Dibromomethane	ND		0.00562	5	08/14/2015 17:07	WG809088
1,2-Dichlorobenzene	ND		0.00562	5	08/14/2015 17:07	WG809088
1,3-Dichlorobenzene	ND		0.00562	5	08/14/2015 17:07	WG809088
1,4-Dichlorobenzene	ND		0.00562	5	08/14/2015 17:07	WG809088
Dichlorodifluoromethane	ND		0.0281	5	08/14/2015 17:07	WG809088
1,1-Dichloroethane	ND		0.00562	5	08/14/2015 17:07	WG809088
1,2-Dichloroethane	ND		0.00562	5	08/14/2015 17:07	WG809088
1,1-Dichloroethene	ND		0.00562	5	08/14/2015 17:07	WG809088
cis-1,2-Dichloroethene	ND		0.00562	5	08/14/2015 17:07	WG809088
trans-1,2-Dichloroethene	ND		0.00562	5	08/14/2015 17:07	WG809088
1,2-Dichloropropane	ND		0.00562	5	08/14/2015 17:07	WG809088
1,1-Dichloropropene	ND		0.00562	5	08/14/2015 17:07	WG809088
1,3-Dichloropropane	ND		0.00562	5	08/14/2015 17:07	WG809088
cis-1,3-Dichloropropene	ND		0.00562	5	08/14/2015 17:07	WG809088
trans-1,3-Dichloropropene	ND		0.00562	5	08/14/2015 17:07	WG809088
2,2-Dichloropropane	ND		0.00562	5	08/14/2015 17:07	WG809088
Dicyclopentadiene	ND		0.00562	5	08/14/2015 17:07	WG809088
Di-isopropyl ether	ND	J4	0.00562	5	08/14/2015 17:07	WG809088
Ethylbenzene	ND		0.00562	5	08/14/2015 17:07	WG809088
Hexachloro-1,3-butadiene	ND		0.00562	5	08/14/2015 17:07	WG809088
Isopropylbenzene	ND		0.00562	5	08/14/2015 17:07	WG809088
p-Isopropyltoluene	ND		0.00562	5	08/14/2015 17:07	WG809088
2-Butanone (MEK)	ND		0.0562	5	08/14/2015 17:07	WG809088
Methylene Chloride	ND		0.0281	5	08/14/2015 17:07	WG809088
4-Methyl-2-pentanone (MIBK)	ND		0.0562	5	08/14/2015 17:07	WG809088
Methyl tert-butyl ether	ND		0.00562	5	08/14/2015 17:07	WG809088
Naphthalene	ND		0.0281	5	08/14/2015 17:07	WG809088
n-Propylbenzene	ND		0.00562	5	08/14/2015 17:07	WG809088
Styrene	ND		0.00562	5	08/14/2015 17:07	WG809088

Volatile Organic Compounds (GC/MS) by Method 8260B

Analyte	Result (dry) mg/kg	Qualifier	RDL (dry) mg/kg	Dilution	Analysis date / time	Batch
1,1,1,2-Tetrachloroethane	ND		0.00562	5	08/14/2015 17:07	WG809088
1,1,2,2-Tetrachloroethane	ND		0.00562	5	08/14/2015 17:07	WG809088
1,1,2-Trichlorotrifluoroethane	ND		0.00562	5	08/14/2015 17:07	WG809088
Tetrachloroethene	ND		0.00562	5	08/14/2015 17:07	WG809088
Toluene	ND		0.0281	5	08/14/2015 17:07	WG809088
1,2,3-Trichlorobenzene	ND		0.00562	5	08/14/2015 17:07	WG809088
1,2,4-Trichlorobenzene	ND		0.00562	5	08/14/2015 17:07	WG809088
1,1,1-Trichloroethane	ND		0.00562	5	08/14/2015 17:07	WG809088
1,1,2-Trichloroethane	ND		0.00562	5	08/14/2015 17:07	WG809088
Trichloroethene	ND		0.00562	5	08/14/2015 17:07	WG809088
Trichlorofluoromethane	ND		0.0281	5	08/14/2015 17:07	WG809088
1,2,3-Trichloropropane	ND		0.0140	5	08/14/2015 17:07	WG809088
1,2,4-Trimethylbenzene	ND		0.00562	5	08/14/2015 17:07	WG809088
1,2,3-Trimethylbenzene	ND		0.00562	5	08/14/2015 17:07	WG809088
1,3,5-Trimethylbenzene	ND		0.00562	5	08/14/2015 17:07	WG809088
Vinyl chloride	ND		0.00562	5	08/14/2015 17:07	WG809088
Xylenes, Total	ND		0.0169	5	08/14/2015 17:07	WG809088
(S) Toluene-d8	*98.7*		*88.7-115*		*08/14/2015 17:07*	WG809088
(S) Dibromofluoromethane	*102*		*76.3-123*		*08/14/2015 17:07*	WG809088
(S) 4-Bromofluorobenzene	*89.6*		*69.7-129*		*08/14/2015 17:07*	WG809088

Semi Volatile Organic Compounds (GC/MS) by Method 8270C

Analyte	Result (dry) mg/kg	Qualifier	RDL (dry) mg/kg	Dilution	Analysis date / time	Batch
Acenaphthene	ND		0.0371	1	08/17/2015 14:24	WG809054
Acenaphthylene	ND		0.0371	1	08/17/2015 14:24	WG809054
Anthracene	ND		0.0371	1	08/17/2015 14:24	WG809054
Benzidine	ND		0.374	1	08/17/2015 14:24	WG809054
Benzo(a)anthracene	ND		0.0371	1	08/17/2015 14:24	WG809054
Benzo(b)fluoranthene	ND		0.0371	1	08/17/2015 14:24	WG809054
Benzo(k)fluoranthene	ND		0.0371	1	08/17/2015 14:24	WG809054
Benzo(g,h,i)perylene	ND		0.0371	1	08/17/2015 14:24	WG809054
Benzo(a)pyrene	ND		0.0371	1	08/17/2015 14:24	WG809054
Bis(2-chlorethoxy)methane	ND		0.374	1	08/17/2015 14:24	WG809054
Bis(2-chloroethyl)ether	ND		0.374	1	08/17/2015 14:24	WG809054
Bis(2-chloroisopropyl)ether	ND		0.374	1	08/17/2015 14:24	WG809054
4-Bromophenyl-phenylether	ND		0.374	1	08/17/2015 14:24	WG809054
2-Chloronaphthalene	ND		0.0371	1	08/17/2015 14:24	WG809054
4-Chlorophenyl-phenylether	ND		0.374	1	08/17/2015 14:24	WG809054
Chrysene	ND		0.0371	1	08/17/2015 14:24	WG809054
Dibenz(a,h)anthracene	ND		0.0371	1	08/17/2015 14:24	WG809054
3,3-Dichlorobenzidine	ND		0.374	1	08/17/2015 14:24	WG809054
2,4-Dinitrotoluene	ND		0.374	1	08/17/2015 14:24	WG809054
2,6-Dinitrotoluene	ND		0.374	1	08/17/2015 14:24	WG809054
Fluoranthene	ND		0.0371	1	08/17/2015 14:24	WG809054
Fluorene	ND		0.0371	1	08/17/2015 14:24	WG809054
Hexachlorobenzene	ND		0.374	1	08/17/2015 14:24	WG809054
Hexachloro-1,3-butadiene	ND		0.374	1	08/17/2015 14:24	WG809054
Hexachlorocyclopentadiene	ND		0.374	1	08/17/2015 14:24	WG809054
Hexachloroethane	ND		0.374	1	08/17/2015 14:24	WG809054
Indeno(1,2,3-cd)pyrene	ND		0.0371	1	08/17/2015 14:24	WG809054
Isophorone	ND		0.374	1	08/17/2015 14:24	WG809054
Naphthalene	ND		0.0371	1	08/17/2015 14:24	WG809054
Nitrobenzene	ND		0.374	1	08/17/2015 14:24	WG809054
n-Nitrosodimethylamine	ND		0.374	1	08/17/2015 14:24	WG809054
n-Nitrosodiphenylamine	ND		0.374	1	08/17/2015 14:24	WG809054

Semi Volatile Organic Compounds (GC/MS) by Method 8270C

Analyte	Result (dry) mg/kg	Qualifier	RDL (dry) mg/kg	Dilution	Analysis date / time	Batch
n-Nitrosodi-n-propylamine	ND		0.374	1	08/17/2015 14:24	WG809054
Phenanthrene	ND		0.0371	1	08/17/2015 14:24	WG809054
Benzylbutyl phthalate	ND		0.374	1	08/17/2015 14:24	WG809054
Bis(2-ethylhexyl)phthalate	ND		0.374	1	08/17/2015 14:24	WG809054
Di-n-butyl phthalate	ND		0.374	1	08/17/2015 14:24	WG809054
Diethyl phthalate	ND		0.374	1	08/17/2015 14:24	WG809054
Dimethyl phthalate	ND		0.374	1	08/17/2015 14:24	WG809054
Di-n-octyl phthalate	ND		0.374	1	08/17/2015 14:24	WG809054
Pyrene	ND		0.0371	1	08/17/2015 14:24	WG809054
1,2,4-Trichlorobenzene	ND		0.374	1	08/17/2015 14:24	WG809054
4-Chloro-3-methylphenol	ND		0.374	1	08/17/2015 14:24	WG809054
2-Chlorophenol	ND	J3	0.374	1	08/17/2015 14:24	WG809054
2,4-Dichlorophenol	ND		0.374	1	08/17/2015 14:24	WG809054
2,4-Dimethylphenol	ND		0.374	1	08/17/2015 14:24	WG809054
4,6-Dinitro-2-methylphenol	ND		0.374	1	08/17/2015 14:24	WG809054
2,4-Dinitrophenol	ND		0.374	1	08/17/2015 14:24	WG809054
2-Nitrophenol	ND		0.374	1	08/17/2015 14:24	WG809054
4-Nitrophenol	ND		0.374	1	08/17/2015 14:24	WG809054
Pentachlorophenol	ND	J3	0.374	1	08/17/2015 14:24	WG809054
Phenol	ND		0.374	1	08/17/2015 14:24	WG809054
2,4,6-Trichlorophenol	ND		0.374	1	08/17/2015 14:24	WG809054
(S) 2-Fluorophenol	*75.7*		*21.1-116*		*08/17/2015 14:24*	WG809054
(S) Phenol-d5	*77.5*		*26.3-121*		*08/17/2015 14:24*	WG809054
(S) Nitrobenzene-d5	*76.5*		*21.9-129*		*08/17/2015 14:24*	WG809054
(S) 2-Fluorobiphenyl	*72.6*		*34.9-129*		*08/17/2015 14:24*	WG809054
(S) 2,4,6-Tribromophenol	*79.1*		*21.6-142*		*08/17/2015 14:24*	WG809054
(S) p-Terphenyl-d14	*59.0*		*21.5-128*		*08/17/2015 14:24*	WG809054

Total Solids by Method 2540 G-2011

Analyte	Result %	Qualifier	Dilution	Analysis date / time	Batch
Total Solids	88.0		1	08/15/2015 08:46	WG809040

Mercury by Method 7471A

Analyte	Result (dry) mg/kg	Qualifier	RDL (dry) mg/kg	Dilution	Analysis date / time	Batch
Mercury	ND		0.0227	1	08/15/2015 10:13	WG809114

Metals (ICP) by Method 6010B

Analyte	Result (dry) mg/kg	Qualifier	RDL (dry) mg/kg	Dilution	Analysis date / time	Batch
Arsenic	ND		2.27	1	08/14/2015 16:31	WG809022
Barium	30.5		0.568	1	08/14/2015 16:31	WG809022
Cadmium	ND		0.568	1	08/14/2015 16:31	WG809022
Chromium	4.93		1.14	1	08/14/2015 16:31	WG809022
Lead	4.77		0.568	1	08/14/2015 16:31	WG809022
Selenium	ND		2.27	1	08/14/2015 16:31	WG809022
Silver	ND		1.14	1	08/14/2015 16:31	WG809022

Volatile Organic Compounds (GC/MS) by Method 8260B

Analyte	Result (dry) mg/kg	Qualifier	RDL (dry) mg/kg	Dilution	Analysis date / time	Batch
Acetone	ND		0.284	5	08/14/2015 17:31	WG809088
Acrylonitrile	ND		0.0568	5	08/14/2015 17:31	WG809088
Benzene	ND		0.00568	5	08/14/2015 17:31	WG809088
Bromobenzene	ND		0.00568	5	08/14/2015 17:31	WG809088
Bromodichloromethane	ND		0.00568	5	08/14/2015 17:31	WG809088
Bromoform	ND		0.00568	5	08/14/2015 17:31	WG809088
Bromomethane	ND		0.0284	5	08/14/2015 17:31	WG809088
n-Butylbenzene	ND		0.00568	5	08/14/2015 17:31	WG809088
sec-Butylbenzene	ND		0.00568	5	08/14/2015 17:31	WG809088
tert-Butylbenzene	ND		0.00568	5	08/14/2015 17:31	WG809088
Carbon tetrachloride	ND		0.00568	5	08/14/2015 17:31	WG809088
Chlorobenzene	ND		0.00568	5	08/14/2015 17:31	WG809088
Chlorodibromomethane	ND		0.00568	5	08/14/2015 17:31	WG809088
Chloroethane	ND		0.0284	5	08/14/2015 17:31	WG809088
2-Chloroethyl vinyl ether	ND		0.284	5	08/14/2015 17:31	WG809088
Chloroform	ND		0.0284	5	08/14/2015 17:31	WG809088
Chloromethane	ND		0.0142	5	08/14/2015 17:31	WG809088
2-Chlorotoluene	ND		0.00568	5	08/14/2015 17:31	WG809088
4-Chlorotoluene	ND		0.00568	5	08/14/2015 17:31	WG809088
1,2-Dibromo-3-Chloropropane	ND		0.0284	5	08/14/2015 17:31	WG809088
1,2-Dibromoethane	ND		0.00568	5	08/14/2015 17:31	WG809088
Dibromomethane	ND		0.00568	5	08/14/2015 17:31	WG809088
1,2-Dichlorobenzene	ND		0.00568	5	08/14/2015 17:31	WG809088
1,3-Dichlorobenzene	ND		0.00568	5	08/14/2015 17:31	WG809088
1,4-Dichlorobenzene	ND		0.00568	5	08/14/2015 17:31	WG809088
Dichlorodifluoromethane	ND		0.0284	5	08/14/2015 17:31	WG809088
1,1-Dichloroethane	ND		0.00568	5	08/14/2015 17:31	WG809088
1,2-Dichloroethane	ND		0.00568	5	08/14/2015 17:31	WG809088
1,1-Dichloroethene	ND		0.00568	5	08/14/2015 17:31	WG809088
cis-1,2-Dichloroethene	ND		0.00568	5	08/14/2015 17:31	WG809088
trans-1,2-Dichloroethene	ND		0.00568	5	08/14/2015 17:31	WG809088
1,2-Dichloropropane	ND		0.00568	5	08/14/2015 17:31	WG809088
1,1-Dichloropropene	ND		0.00568	5	08/14/2015 17:31	WG809088

Volatile Organic Compounds (GC/MS) by Method 8260B

Analyte	Result (dry) mg/kg	Qualifier	RDL (dry) mg/kg	Dilution	Analysis date / time	Batch
1,3-Dichloropropane	ND		0.00568	5	08/14/2015 17:31	WG809088
cis-1,3-Dichloropropene	ND		0.00568	5	08/14/2015 17:31	WG809088
trans-1,3-Dichloropropene	ND		0.00568	5	08/14/2015 17:31	WG809088
2,2-Dichloropropane	ND		0.00568	5	08/14/2015 17:31	WG809088
Dicyclopentadiene	ND		0.00568	5	08/14/2015 17:31	WG809088
Di-isopropyl ether	ND	J4	0.00568	5	08/14/2015 17:31	WG809088
Ethylbenzene	ND		0.00568	5	08/14/2015 17:31	WG809088
Hexachloro-1,3-butadiene	ND		0.00568	5	08/14/2015 17:31	WG809088
Isopropylbenzene	ND		0.00568	5	08/14/2015 17:31	WG809088
p-Isopropyltoluene	ND		0.00568	5	08/14/2015 17:31	WG809088
2-Butanone (MEK)	ND		0.0568	5	08/14/2015 17:31	WG809088
Methylene Chloride	ND		0.0284	5	08/14/2015 17:31	WG809088
4-Methyl-2-pentanone (MIBK)	ND		0.0568	5	08/14/2015 17:31	WG809088
Methyl tert-butyl ether	ND		0.00568	5	08/14/2015 17:31	WG809088
Naphthalene	ND		0.0284	5	08/14/2015 17:31	WG809088
n-Propylbenzene	ND		0.00568	5	08/14/2015 17:31	WG809088
Styrene	ND		0.00568	5	08/14/2015 17:31	WG809088
1,1,1,2-Tetrachloroethane	ND		0.00568	5	08/14/2015 17:31	WG809088
1,1,2,2-Tetrachloroethane	ND		0.00568	5	08/14/2015 17:31	WG809088
1,1,2-Trichlorotrifluoroethane	ND		0.00568	5	08/14/2015 17:31	WG809088
Tetrachloroethene	ND		0.00568	5	08/14/2015 17:31	WG809088
Toluene	ND		0.0284	5	08/14/2015 17:31	WG809088
1,2,3-Trichlorobenzene	ND		0.00568	5	08/14/2015 17:31	WG809088
1,2,4-Trichlorobenzene	ND		0.00568	5	08/14/2015 17:31	WG809088
1,1,1-Trichloroethane	ND		0.00568	5	08/14/2015 17:31	WG809088
1,1,2-Trichloroethane	ND		0.00568	5	08/14/2015 17:31	WG809088
Trichloroethene	ND		0.00568	5	08/14/2015 17:31	WG809088
Trichlorofluoromethane	ND		0.0284	5	08/14/2015 17:31	WG809088
1,2,3-Trichloropropane	ND		0.0142	5	08/14/2015 17:31	WG809088
1,2,4-Trimethylbenzene	ND		0.00568	5	08/14/2015 17:31	WG809088
1,2,3-Trimethylbenzene	ND		0.00568	5	08/14/2015 17:31	WG809088
1,3,5-Trimethylbenzene	ND		0.00568	5	08/14/2015 17:31	WG809088
Vinyl chloride	ND		0.00568	5	08/14/2015 17:31	WG809088
Xylenes, Total	ND		0.0171	5	08/14/2015 17:31	WG809088
(S) Toluene-d8	*98.6*		*88.7-115*		*08/14/2015 17:31*	WG809088
(S) Dibromofluoromethane	*101*		*76.3-123*		*08/14/2015 17:31*	WG809088
(S) 4-Bromofluorobenzene	*89.5*		*69.7-129*		*08/14/2015 17:31*	WG809088

Semi Volatile Organic Compounds (GC/MS) by Method 8270C

Analyte	Result (dry) mg/kg	Qualifier	RDL (dry) mg/kg	Dilution	Analysis date / time	Batch
Acenaphthene	ND		0.0375	1	08/17/2015 14:49	WG809054
Acenaphthylene	ND		0.0375	1	08/17/2015 14:49	WG809054
Anthracene	ND		0.0375	1	08/17/2015 14:49	WG809054
Benzidine	ND		0.379	1	08/17/2015 14:49	WG809054
Benzo(a)anthracene	ND		0.0375	1	08/17/2015 14:49	WG809054
Benzo(b)fluoranthene	ND		0.0375	1	08/17/2015 14:49	WG809054
Benzo(k)fluoranthene	ND		0.0375	1	08/17/2015 14:49	WG809054
Benzo(g,h,i)perylene	ND		0.0375	1	08/17/2015 14:49	WG809054
Benzo(a)pyrene	ND		0.0375	1	08/17/2015 14:49	WG809054
Bis(2-chlorethoxy)methane	ND		0.379	1	08/17/2015 14:49	WG809054
Bis(2-chloroethyl)ether	ND		0.379	1	08/17/2015 14:49	WG809054
Bis(2-chloroisopropyl)ether	ND		0.379	1	08/17/2015 14:49	WG809054
4-Bromophenyl-phenylether	ND		0.379	1	08/17/2015 14:49	WG809054
2-Chloronaphthalene	ND		0.0375	1	08/17/2015 14:49	WG809054
4-Chlorophenyl-phenylether	ND		0.379	1	08/17/2015 14:49	WG809054

Semi Volatile Organic Compounds (GC/MS) by Method 8270C

Analyte	Result (dry) mg/kg	Qualifier	RDL (dry) mg/kg	Dilution	Analysis date / time	Batch
Chrysene	ND		0.0375	1	08/17/2015 14:49	WG809054
Dibenz(a,h)anthracene	ND		0.0375	1	08/17/2015 14:49	WG809054
3,3-Dichlorobenzidine	ND		0.379	1	08/17/2015 14:49	WG809054
2,4-Dinitrotoluene	ND		0.379	1	08/17/2015 14:49	WG809054
2,6-Dinitrotoluene	ND		0.379	1	08/17/2015 14:49	WG809054
Fluoranthene	ND		0.0375	1	08/17/2015 14:49	WG809054
Fluorene	ND		0.0375	1	08/17/2015 14:49	WG809054
Hexachlorobenzene	ND		0.379	1	08/17/2015 14:49	WG809054
Hexachloro-1,3-butadiene	ND		0.379	1	08/17/2015 14:49	WG809054
Hexachlorocyclopentadiene	ND		0.379	1	08/17/2015 14:49	WG809054
Hexachloroethane	ND		0.379	1	08/17/2015 14:49	WG809054
Indeno(1,2,3-cd)pyrene	ND		0.0375	1	08/17/2015 14:49	WG809054
Isophorone	ND		0.379	1	08/17/2015 14:49	WG809054
Naphthalene	ND		0.0375	1	08/17/2015 14:49	WG809054
Nitrobenzene	ND		0.379	1	08/17/2015 14:49	WG809054
n-Nitrosodimethylamine	ND		0.379	1	08/17/2015 14:49	WG809054
n-Nitrosodiphenylamine	ND		0.379	1	08/17/2015 14:49	WG809054
n-Nitrosodi-n-propylamine	ND		0.379	1	08/17/2015 14:49	WG809054
Phenanthrene	ND		0.0375	1	08/17/2015 14:49	WG809054
Benzylbutyl phthalate	ND		0.379	1	08/17/2015 14:49	WG809054
Bis(2-ethylhexyl)phthalate	ND		0.379	1	08/17/2015 14:49	WG809054
Di-n-butyl phthalate	ND		0.379	1	08/17/2015 14:49	WG809054
Diethyl phthalate	ND		0.379	1	08/17/2015 14:49	WG809054
Dimethyl phthalate	ND		0.379	1	08/17/2015 14:49	WG809054
Di-n-octyl phthalate	ND		0.379	1	08/17/2015 14:49	WG809054
Pyrene	ND		0.0375	1	08/17/2015 14:49	WG809054
1,2,4-Trichlorobenzene	ND		0.379	1	08/17/2015 14:49	WG809054
4-Chloro-3-methylphenol	ND		0.379	1	08/17/2015 14:49	WG809054
2-Chlorophenol	ND	J3	0.379	1	08/17/2015 14:49	WG809054
2,4-Dichlorophenol	ND		0.379	1	08/17/2015 14:49	WG809054
2,4-Dimethylphenol	ND		0.379	1	08/17/2015 14:49	WG809054
4,6-Dinitro-2-methylphenol	ND		0.379	1	08/17/2015 14:49	WG809054
2,4-Dinitrophenol	ND		0.379	1	08/17/2015 14:49	WG809054
2-Nitrophenol	ND		0.379	1	08/17/2015 14:49	WG809054
4-Nitrophenol	ND		0.379	1	08/17/2015 14:49	WG809054
Pentachlorophenol	ND	J3	0.379	1	08/17/2015 14:49	WG809054
Phenol	ND		0.379	1	08/17/2015 14:49	WG809054
2,4,6-Trichlorophenol	ND		0.379	1	08/17/2015 14:49	WG809054
(S) 2-Fluorophenol	*66.8*		*21.1-116*		*08/17/2015 14:49*	WG809054
(S) Phenol-d5	*70.4*		*26.3-121*		*08/17/2015 14:49*	WG809054
(S) Nitrobenzene-d5	*75.7*		*21.9-129*		*08/17/2015 14:49*	WG809054
(S) 2-Fluorobiphenyl	*74.1*		*34.9-129*		*08/17/2015 14:49*	WG809054
(S) 2,4,6-Tribromophenol	*81.8*		*21.6-142*		*08/17/2015 14:49*	WG809054
(S) p-Terphenyl-d14	*60.3*		*21.5-128*		*08/17/2015 14:49*	WG809054

Total Solids by Method 2540 G-2011

Analyte	Result %	Qualifier	Dilution	Analysis date / time	Batch
Total Solids	91.7		1	08/15/2015 08:46	WG809040

Volatile Organic Compounds (GC/MS) by Method 8260B

Analyte	Result (dry) mg/kg	Qualifier	RDL (dry) mg/kg	Dilution	Analysis date / time	Batch
Acetone	ND		0.273	5	08/14/2015 17:54	WG809088
Acrylonitrile	ND		0.0545	5	08/14/2015 17:54	WG809088
Benzene	ND		0.00545	5	08/14/2015 17:54	WG809088
Bromobenzene	ND		0.00545	5	08/14/2015 17:54	WG809088
Bromodichloromethane	ND		0.00545	5	08/14/2015 17:54	WG809088
Bromoform	ND		0.00545	5	08/14/2015 17:54	WG809088
Bromomethane	ND		0.0273	5	08/14/2015 17:54	WG809088
n-Butylbenzene	ND		0.00545	5	08/14/2015 17:54	WG809088
sec-Butylbenzene	ND		0.00545	5	08/14/2015 17:54	WG809088
tert-Butylbenzene	ND		0.00545	5	08/14/2015 17:54	WG809088
Carbon tetrachloride	ND		0.00545	5	08/14/2015 17:54	WG809088
Chlorobenzene	ND		0.00545	5	08/14/2015 17:54	WG809088
Chlorodibromomethane	ND		0.00545	5	08/14/2015 17:54	WG809088
Chloroethane	ND		0.0273	5	08/14/2015 17:54	WG809088
2-Chloroethyl vinyl ether	ND		0.273	5	08/14/2015 17:54	WG809088
Chloroform	ND		0.0273	5	08/14/2015 17:54	WG809088
Chloromethane	ND		0.0136	5	08/14/2015 17:54	WG809088
2-Chlorotoluene	ND		0.00545	5	08/14/2015 17:54	WG809088
4-Chlorotoluene	ND		0.00545	5	08/14/2015 17:54	WG809088
1,2-Dibromo-3-Chloropropane	ND		0.0273	5	08/14/2015 17:54	WG809088
1,2-Dibromoethane	ND		0.00545	5	08/14/2015 17:54	WG809088
Dibromomethane	ND		0.00545	5	08/14/2015 17:54	WG809088
1,2-Dichlorobenzene	ND		0.00545	5	08/14/2015 17:54	WG809088
1,3-Dichlorobenzene	ND		0.00545	5	08/14/2015 17:54	WG809088
1,4-Dichlorobenzene	ND		0.00545	5	08/14/2015 17:54	WG809088
Dichlorodifluoromethane	ND		0.0273	5	08/14/2015 17:54	WG809088
1,1-Dichloroethane	ND		0.00545	5	08/14/2015 17:54	WG809088
1,2-Dichloroethane	ND		0.00545	5	08/14/2015 17:54	WG809088
1,1-Dichloroethene	ND		0.00545	5	08/14/2015 17:54	WG809088
cis-1,2-Dichloroethene	ND		0.00545	5	08/14/2015 17:54	WG809088
trans-1,2-Dichloroethene	ND		0.00545	5	08/14/2015 17:54	WG809088
1,2-Dichloropropane	ND		0.00545	5	08/14/2015 17:54	WG809088
1,1-Dichloropropene	ND		0.00545	5	08/14/2015 17:54	WG809088
1,3-Dichloropropane	ND		0.00545	5	08/14/2015 17:54	WG809088
cis-1,3-Dichloropropene	ND		0.00545	5	08/14/2015 17:54	WG809088
trans-1,3-Dichloropropene	ND		0.00545	5	08/14/2015 17:54	WG809088
2,2-Dichloropropane	ND		0.00545	5	08/14/2015 17:54	WG809088
Dicyclopentadiene	ND		0.00545	5	08/14/2015 17:54	WG809088
Di-isopropyl ether	ND	J4	0.00545	5	08/14/2015 17:54	WG809088
Ethylbenzene	ND		0.00545	5	08/14/2015 17:54	WG809088
Hexachloro-1,3-butadiene	ND		0.00545	5	08/14/2015 17:54	WG809088
Isopropylbenzene	ND		0.00545	5	08/14/2015 17:54	WG809088
p-Isopropyltoluene	ND		0.00545	5	08/14/2015 17:54	WG809088
2-Butanone (MEK)	ND		0.0545	5	08/14/2015 17:54	WG809088
Methylene Chloride	ND		0.0273	5	08/14/2015 17:54	WG809088
4-Methyl-2-pentanone (MIBK)	ND		0.0545	5	08/14/2015 17:54	WG809088
Methyl tert-butyl ether	ND		0.00545	5	08/14/2015 17:54	WG809088
Naphthalene	ND		0.0273	5	08/14/2015 17:54	WG809088
n-Propylbenzene	ND		0.00545	5	08/14/2015 17:54	WG809088
Styrene	ND		0.00545	5	08/14/2015 17:54	WG809088

Volatile Organic Compounds (GC/MS) by Method 8260B

Analyte	Result (dry) mg/kg	Qualifier	RDL (dry) mg/kg	Dilution	Analysis date / time	Batch
1,1,1,2-Tetrachloroethane	ND		0.00545	5	08/14/2015 17:54	WG809088
1,1,2,2-Tetrachloroethane	ND		0.00545	5	08/14/2015 17:54	WG809088
1,1,2-Trichlorotrifluoroethane	ND		0.00545	5	08/14/2015 17:54	WG809088
Tetrachloroethene	ND		0.00545	5	08/14/2015 17:54	WG809088
Toluene	ND		0.0273	5	08/14/2015 17:54	WG809088
1,2,3-Trichlorobenzene	ND		0.00545	5	08/14/2015 17:54	WG809088
1,2,4-Trichlorobenzene	ND		0.00545	5	08/14/2015 17:54	WG809088
1,1,1-Trichloroethane	ND		0.00545	5	08/14/2015 17:54	WG809088
1,1,2-Trichloroethane	ND		0.00545	5	08/14/2015 17:54	WG809088
Trichloroethene	ND		0.00545	5	08/14/2015 17:54	WG809088
Trichlorofluoromethane	ND		0.0273	5	08/14/2015 17:54	WG809088
1,2,3-Trichloropropane	ND		0.0136	5	08/14/2015 17:54	WG809088
1,2,4-Trimethylbenzene	ND		0.00545	5	08/14/2015 17:54	WG809088
1,2,3-Trimethylbenzene	ND		0.00545	5	08/14/2015 17:54	WG809088
1,3,5-Trimethylbenzene	ND		0.00545	5	08/14/2015 17:54	WG809088
Vinyl chloride	ND		0.00545	5	08/14/2015 17:54	WG809088
Xylenes, Total	ND		0.0164	5	08/14/2015 17:54	WG809088
(S) Toluene-d8	*99.9*		*88.7-115*		*08/14/2015 17:54*	WG809088
(S) Dibromofluoromethane	*101*		*76.3-123*		*08/14/2015 17:54*	WG809088
(S) 4-Bromofluorobenzene	*86.9*		*69.7-129*		*08/14/2015 17:54*	WG809088

Semi Volatile Organic Compounds (GC/MS) by Method 8270C

Analyte	Result (dry) mg/kg	Qualifier	RDL (dry) mg/kg	Dilution	Analysis date / time	Batch
Acenaphthene	ND		0.0360	1	08/17/2015 12:10	WG809054
Acenaphthylene	ND		0.0360	1	08/17/2015 12:10	WG809054
Anthracene	ND		0.0360	1	08/17/2015 12:10	WG809054
Benzidine	ND		0.363	1	08/17/2015 12:10	WG809054
Benzo(a)anthracene	ND		0.0360	1	08/17/2015 12:10	WG809054
Benzo(b)fluoranthene	ND		0.0360	1	08/17/2015 12:10	WG809054
Benzo(k)fluoranthene	ND		0.0360	1	08/17/2015 12:10	WG809054
Benzo(g,h,i)perylene	ND		0.0360	1	08/17/2015 12:10	WG809054
Benzo(a)pyrene	ND		0.0360	1	08/17/2015 12:10	WG809054
Bis(2-chlorethoxy)methane	ND		0.363	1	08/17/2015 12:10	WG809054
Bis(2-chloroethyl)ether	ND		0.363	1	08/17/2015 12:10	WG809054
Bis(2-chloroisopropyl)ether	ND		0.363	1	08/17/2015 12:10	WG809054
4-Bromophenyl-phenylether	ND		0.363	1	08/17/2015 12:10	WG809054
2-Chloronaphthalene	ND		0.0360	1	08/17/2015 12:10	WG809054
4-Chlorophenyl-phenylether	ND		0.363	1	08/17/2015 12:10	WG809054
Chrysene	ND		0.0360	1	08/17/2015 12:10	WG809054
Dibenz(a,h)anthracene	ND		0.0360	1	08/17/2015 12:10	WG809054
3,3-Dichlorobenzidine	ND		0.363	1	08/17/2015 12:10	WG809054
2,4-Dinitrotoluene	ND		0.363	1	08/17/2015 12:10	WG809054
2,6-Dinitrotoluene	ND		0.363	1	08/17/2015 12:10	WG809054
Fluoranthene	ND		0.0360	1	08/17/2015 12:10	WG809054
Fluorene	ND		0.0360	1	08/17/2015 12:10	WG809054
Hexachlorobenzene	ND		0.363	1	08/17/2015 12:10	WG809054
Hexachloro-1,3-butadiene	ND		0.363	1	08/17/2015 12:10	WG809054
Hexachlorocyclopentadiene	ND		0.363	1	08/17/2015 12:10	WG809054
Hexachloroethane	ND		0.363	1	08/17/2015 12:10	WG809054
Indeno(1,2,3-cd)pyrene	ND		0.0360	1	08/17/2015 12:10	WG809054
Isophorone	ND		0.363	1	08/17/2015 12:10	WG809054
Naphthalene	0.0783		0.0360	1	08/17/2015 12:10	WG809054
Nitrobenzene	ND		0.363	1	08/17/2015 12:10	WG809054
n-Nitrosodimethylamine	ND		0.363	1	08/17/2015 12:10	WG809054
n-Nitrosodiphenylamine	ND		0.363	1	08/17/2015 12:10	WG809054

Semi Volatile Organic Compounds (GC/MS) by Method 8270C

Analyte	Result (dry) mg/kg	Qualifier	RDL (dry) mg/kg	Dilution	Analysis date / time	Batch
n-Nitrosodi-n-propylamine	ND		0.363	1	08/17/2015 12:10	WG809054
Phenanthrene	ND		0.0360	1	08/17/2015 12:10	WG809054
Benzylbutyl phthalate	ND		0.363	1	08/17/2015 12:10	WG809054
Bis(2-ethylhexyl)phthalate	ND		0.363	1	08/17/2015 12:10	WG809054
Di-n-butyl phthalate	ND		0.363	1	08/17/2015 12:10	WG809054
Diethyl phthalate	ND		0.363	1	08/17/2015 12:10	WG809054
Dimethyl phthalate	ND		0.363	1	08/17/2015 12:10	WG809054
Di-n-octyl phthalate	ND		0.363	1	08/17/2015 12:10	WG809054
Pyrene	ND		0.0360	1	08/17/2015 12:10	WG809054
1,2,4-Trichlorobenzene	ND		0.363	1	08/17/2015 12:10	WG809054
4-Chloro-3-methylphenol	ND		0.363	1	08/17/2015 12:10	WG809054
2-Chlorophenol	ND		0.363	1	08/17/2015 12:10	WG809054
2,4-Dichlorophenol	ND		0.363	1	08/17/2015 12:10	WG809054
2,4-Dimethylphenol	ND		0.363	1	08/17/2015 12:10	WG809054
4,6-Dinitro-2-methylphenol	ND		0.363	1	08/17/2015 12:10	WG809054
2,4-Dinitrophenol	ND		0.363	1	08/17/2015 12:10	WG809054
2-Nitrophenol	ND		0.363	1	08/17/2015 12:10	WG809054
4-Nitrophenol	ND		0.363	1	08/17/2015 12:10	WG809054
Pentachlorophenol	ND		0.363	1	08/17/2015 12:10	WG809054
Phenol	ND		0.363	1	08/17/2015 12:10	WG809054
2,4,6-Trichlorophenol	ND		0.363	1	08/17/2015 12:10	WG809054
(S) 2-Fluorophenol	*70.2*		*21.1-116*		*08/17/2015 12:10*	WG809054
(S) Phenol-d5	*71.3*		*26.3-121*		*08/17/2015 12:10*	WG809054
(S) Nitrobenzene-d5	*79.3*		*21.9-129*		*08/17/2015 12:10*	WG809054
(S) 2-Fluorobiphenyl	*77.2*		*34.9-129*		*08/17/2015 12:10*	WG809054
(S) 2,4,6-Tribromophenol	*92.7*		*21.6-142*		*08/17/2015 12:10*	WG809054
(S) p-Terphenyl-d14	*69.9*		*21.5-128*		*08/17/2015 12:10*	WG809054

Total Solids by Method 2540 G-2011

Analyte	Result %	Qualifier	Dilution	Analysis date / time	Batch
Total Solids	81.6		1	08/15/2015 09:26	WG809041

Mercury by Method 7471A

Analyte	Result (dry) mg/kg	Qualifier	RDL (dry) mg/kg	Dilution	Analysis date / time	Batch
Mercury	ND		0.0245	1	08/15/2015 10:16	WG809114

Metals (ICP) by Method 6010B

Analyte	Result (dry) mg/kg	Qualifier	RDL (dry) mg/kg	Dilution	Analysis date / time	Batch
Arsenic	ND		2.45	1	08/14/2015 16:34	WG809022
Barium	25.5		0.613	1	08/14/2015 16:34	WG809022
Cadmium	ND		0.613	1	08/14/2015 16:34	WG809022
Chromium	4.83		1.23	1	08/14/2015 16:34	WG809022
Lead	5.30		0.613	1	08/14/2015 16:34	WG809022
Selenium	ND		2.45	1	08/14/2015 16:34	WG809022
Silver	ND		1.23	1	08/14/2015 16:34	WG809022

Volatile Organic Compounds (GC/MS) by Method 8260B

Analyte	Result (dry) mg/kg	Qualifier	RDL (dry) mg/kg	Dilution	Analysis date / time	Batch
Acetone	ND		0.306	5	08/14/2015 18:17	WG809088
Acrylonitrile	ND		0.0613	5	08/14/2015 18:17	WG809088
Benzene	ND		0.00613	5	08/14/2015 18:17	WG809088
Bromobenzene	ND		0.00613	5	08/14/2015 18:17	WG809088
Bromodichloromethane	ND		0.00613	5	08/14/2015 18:17	WG809088
Bromoform	ND		0.00613	5	08/14/2015 18:17	WG809088
Bromomethane	ND		0.0306	5	08/14/2015 18:17	WG809088
n-Butylbenzene	ND		0.00613	5	08/14/2015 18:17	WG809088
sec-Butylbenzene	ND		0.00613	5	08/14/2015 18:17	WG809088
tert-Butylbenzene	ND		0.00613	5	08/14/2015 18:17	WG809088
Carbon tetrachloride	ND		0.00613	5	08/14/2015 18:17	WG809088
Chlorobenzene	ND		0.00613	5	08/14/2015 18:17	WG809088
Chlorodibromomethane	ND		0.00613	5	08/14/2015 18:17	WG809088
Chloroethane	ND		0.0306	5	08/14/2015 18:17	WG809088
2-Chloroethyl vinyl ether	ND		0.306	5	08/14/2015 18:17	WG809088
Chloroform	ND		0.0306	5	08/14/2015 18:17	WG809088
Chloromethane	ND		0.0153	5	08/14/2015 18:17	WG809088
2-Chlorotoluene	ND		0.00613	5	08/14/2015 18:17	WG809088
4-Chlorotoluene	ND		0.00613	5	08/14/2015 18:17	WG809088
1,2-Dibromo-3-Chloropropane	ND		0.0306	5	08/14/2015 18:17	WG809088
1,2-Dibromoethane	ND		0.00613	5	08/14/2015 18:17	WG809088
Dibromomethane	ND		0.00613	5	08/14/2015 18:17	WG809088
1,2-Dichlorobenzene	ND		0.00613	5	08/14/2015 18:17	WG809088
1,3-Dichlorobenzene	ND		0.00613	5	08/14/2015 18:17	WG809088
1,4-Dichlorobenzene	ND		0.00613	5	08/14/2015 18:17	WG809088
Dichlorodifluoromethane	ND		0.0306	5	08/14/2015 18:17	WG809088
1,1-Dichloroethane	ND		0.00613	5	08/14/2015 18:17	WG809088
1,2-Dichloroethane	ND		0.00613	5	08/14/2015 18:17	WG809088
1,1-Dichloroethene	ND		0.00613	5	08/14/2015 18:17	WG809088
cis-1,2-Dichloroethene	ND		0.00613	5	08/14/2015 18:17	WG809088
trans-1,2-Dichloroethene	ND		0.00613	5	08/14/2015 18:17	WG809088
1,2-Dichloropropane	ND		0.00613	5	08/14/2015 18:17	WG809088
1,1-Dichloropropene	ND		0.00613	5	08/14/2015 18:17	WG809088

Volatile Organic Compounds (GC/MS) by Method 8260B

Analyte	Result (dry) mg/kg	Qualifier	RDL (dry) mg/kg	Dilution	Analysis date / time	Batch
1,3-Dichloropropane	ND		0.00613	5	08/14/2015 18:17	WG809088
cis-1,3-Dichloropropene	ND		0.00613	5	08/14/2015 18:17	WG809088
trans-1,3-Dichloropropene	ND		0.00613	5	08/14/2015 18:17	WG809088
2,2-Dichloropropane	ND		0.00613	5	08/14/2015 18:17	WG809088
Dicyclopentadiene	0.209		0.00613	5	08/14/2015 18:17	WG809088
Di-isopropyl ether	ND	J4	0.00613	5	08/14/2015 18:17	WG809088
Ethylbenzene	ND		0.00613	5	08/14/2015 18:17	WG809088
Hexachloro-1,3-butadiene	ND		0.00613	5	08/14/2015 18:17	WG809088
Isopropylbenzene	ND		0.00613	5	08/14/2015 18:17	WG809088
p-Isopropyltoluene	ND		0.00613	5	08/14/2015 18:17	WG809088
2-Butanone (MEK)	ND		0.0613	5	08/14/2015 18:17	WG809088
Methylene Chloride	ND		0.0306	5	08/14/2015 18:17	WG809088
4-Methyl-2-pentanone (MIBK)	ND		0.0613	5	08/14/2015 18:17	WG809088
Methyl tert-butyl ether	ND		0.00613	5	08/14/2015 18:17	WG809088
Naphthalene	ND		0.0306	5	08/14/2015 18:17	WG809088
n-Propylbenzene	ND		0.00613	5	08/14/2015 18:17	WG809088
Styrene	ND		0.00613	5	08/14/2015 18:17	WG809088
1,1,1,2-Tetrachloroethane	ND		0.00613	5	08/14/2015 18:17	WG809088
1,1,2,2-Tetrachloroethane	ND		0.00613	5	08/14/2015 18:17	WG809088
1,1,2-Trichlorotrifluoroethane	ND		0.00613	5	08/14/2015 18:17	WG809088
Tetrachloroethene	ND		0.00613	5	08/14/2015 18:17	WG809088
Toluene	0.0704		0.0306	5	08/14/2015 18:17	WG809088
1,2,3-Trichlorobenzene	ND		0.00613	5	08/14/2015 18:17	WG809088
1,2,4-Trichlorobenzene	ND		0.00613	5	08/14/2015 18:17	WG809088
1,1,1-Trichloroethane	ND		0.00613	5	08/14/2015 18:17	WG809088
1,1,2-Trichloroethane	ND		0.00613	5	08/14/2015 18:17	WG809088
Trichloroethene	ND		0.00613	5	08/14/2015 18:17	WG809088
Trichlorofluoromethane	ND		0.0306	5	08/14/2015 18:17	WG809088
1,2,3-Trichloropropane	ND		0.0153	5	08/14/2015 18:17	WG809088
1,2,4-Trimethylbenzene	ND		0.00613	5	08/14/2015 18:17	WG809088
1,2,3-Trimethylbenzene	ND		0.00613	5	08/14/2015 18:17	WG809088
1,3,5-Trimethylbenzene	ND		0.00613	5	08/14/2015 18:17	WG809088
Vinyl chloride	ND		0.00613	5	08/14/2015 18:17	WG809088
Xylenes, Total	ND		0.0184	5	08/14/2015 18:17	WG809088
(S) Toluene-d8	*99.8*		*88.7-115*		*08/14/2015 18:17*	WG809088
(S) Dibromofluoromethane	*101*		*76.3-123*		*08/14/2015 18:17*	WG809088
(S) 4-Bromofluorobenzene	*88.9*		*69.7-129*		*08/14/2015 18:17*	WG809088

Semi Volatile Organic Compounds (GC/MS) by Method 8270C

Analyte	Result (dry) mg/kg	Qualifier	RDL (dry) mg/kg	Dilution	Analysis date / time	Batch
Acenaphthene	ND		0.404	10	08/17/2015 14:45	WG809054
Acenaphthylene	ND		0.404	10	08/17/2015 14:45	WG809054
Anthracene	ND		0.404	10	08/17/2015 14:45	WG809054
Benzidine	ND		4.08	10	08/17/2015 14:45	WG809054
Benzo(a)anthracene	ND		0.404	10	08/17/2015 14:45	WG809054
Benzo(b)fluoranthene	ND		2.02	50	08/17/2015 16:28	WG809054
Benzo(k)fluoranthene	ND		2.02	50	08/17/2015 16:28	WG809054
Benzo(g,h,i)perylene	ND		2.02	50	08/17/2015 16:28	WG809054
Benzo(a)pyrene	ND		2.02	50	08/17/2015 16:28	WG809054
Bis(2-chlorethoxy)methane	ND		4.08	10	08/17/2015 14:45	WG809054
Bis(2-chloroethyl)ether	ND		4.08	10	08/17/2015 14:45	WG809054
Bis(2-chloroisopropyl)ether	ND		4.08	10	08/17/2015 14:45	WG809054
4-Bromophenyl-phenylether	ND		4.08	10	08/17/2015 14:45	WG809054
2-Chloronaphthalene	ND		0.404	10	08/17/2015 14:45	WG809054
4-Chlorophenyl-phenylether	ND		4.08	10	08/17/2015 14:45	WG809054

Semi Volatile Organic Compounds (GC/MS) by Method 8270C

Analyte	Result (dry) mg/kg	Qualifier	RDL (dry) mg/kg	Dilution	Analysis date / time	Batch
Chrysene	ND		0.404	10	08/17/2015 14:45	WG809054
Dibenz(a,h)anthracene	ND		2.02	50	08/17/2015 16:28	WG809054
3,3-Dichlorobenzidine	ND		4.08	10	08/17/2015 14:45	WG809054
2,4-Dinitrotoluene	ND		4.08	10	08/17/2015 14:45	WG809054
2,6-Dinitrotoluene	ND		4.08	10	08/17/2015 14:45	WG809054
Fluoranthene	ND		0.404	10	08/17/2015 14:45	WG809054
Fluorene	ND		0.404	10	08/17/2015 14:45	WG809054
Hexachlorobenzene	ND		4.08	10	08/17/2015 14:45	WG809054
Hexachloro-1,3-butadiene	ND		4.08	10	08/17/2015 14:45	WG809054
Hexachlorocyclopentadiene	ND		4.08	10	08/17/2015 14:45	WG809054
Hexachloroethane	ND		4.08	10	08/17/2015 14:45	WG809054
Indeno(1,2,3-cd)pyrene	ND		2.02	50	08/17/2015 16:28	WG809054
Isophorone	ND		4.08	10	08/17/2015 14:45	WG809054
Naphthalene	ND		0.404	10	08/17/2015 14:45	WG809054
Nitrobenzene	ND		4.08	10	08/17/2015 14:45	WG809054
n-Nitrosodimethylamine	ND		4.08	10	08/17/2015 14:45	WG809054
n-Nitrosodiphenylamine	ND		4.08	10	08/17/2015 14:45	WG809054
n-Nitrosodi-n-propylamine	ND		4.08	10	08/17/2015 14:45	WG809054
Phenanthrene	ND		0.404	10	08/17/2015 14:45	WG809054
Benzylbutyl phthalate	ND		4.08	10	08/17/2015 14:45	WG809054
Bis(2-ethylhexyl)phthalate	ND		4.08	10	08/17/2015 14:45	WG809054
Di-n-butyl phthalate	ND		4.08	10	08/17/2015 14:45	WG809054
Diethyl phthalate	ND		4.08	10	08/17/2015 14:45	WG809054
Dimethyl phthalate	ND		4.08	10	08/17/2015 14:45	WG809054
Di-n-octyl phthalate	ND		4.08	10	08/17/2015 14:45	WG809054
Pyrene	ND		0.404	10	08/17/2015 14:45	WG809054
1,2,4-Trichlorobenzene	ND		4.08	10	08/17/2015 14:45	WG809054
4-Chloro-3-methylphenol	ND		4.08	10	08/17/2015 14:45	WG809054
2-Chlorophenol	ND		4.08	10	08/17/2015 14:45	WG809054
2,4-Dichlorophenol	ND		4.08	10	08/17/2015 14:45	WG809054
2,4-Dimethylphenol	ND		4.08	10	08/17/2015 14:45	WG809054
4,6-Dinitro-2-methylphenol	ND		4.08	10	08/17/2015 14:45	WG809054
2,4-Dinitrophenol	ND		4.08	10	08/17/2015 14:45	WG809054
2-Nitrophenol	ND		4.08	10	08/17/2015 14:45	WG809054
4-Nitrophenol	ND		4.08	10	08/17/2015 14:45	WG809054
Pentachlorophenol	ND		4.08	10	08/17/2015 14:45	WG809054
Phenol	ND		4.08	10	08/17/2015 14:45	WG809054
2,4,6-Trichlorophenol	ND		4.08	10	08/17/2015 14:45	WG809054
(S) 2-Fluorophenol	*75.4*		*21.1-116*		*08/17/2015 14:45*	WG809054
(S) Phenol-d5	*79.5*		*26.3-121*		*08/17/2015 14:45*	WG809054
(S) Nitrobenzene-d5	*79.5*		*21.9-129*		*08/17/2015 14:45*	WG809054
(S) 2-Fluorobiphenyl	*72.4*		*34.9-129*		*08/17/2015 14:45*	WG809054
(S) 2,4,6-Tribromophenol	*91.2*		*21.6-142*		*08/17/2015 14:45*	WG809054
(S) p-Terphenyl-d14	*111*		*21.5-128*		*08/17/2015 14:45*	WG809054

Total Solids by Method 2540 G-2011

Analyte	Result %	Qualifier	Dilution	Analysis date / time	Batch
Total Solids	89.4		1	08/15/2015 09:26	WG809041

Volatile Organic Compounds (GC/MS) by Method 8260B

Analyte	Result (dry) mg/kg	Qualifier	RDL (dry) mg/kg	Dilution	Analysis date / time	Batch
Acetone	ND		28.0	500	08/14/2015 18:40	WG809088
Acrylonitrile	ND		5.59	500	08/14/2015 18:40	WG809088
Benzene	ND		0.559	500	08/14/2015 18:40	WG809088
Bromobenzene	ND		0.559	500	08/14/2015 18:40	WG809088
Bromodichloromethane	ND		0.559	500	08/14/2015 18:40	WG809088
Bromoform	ND		0.559	500	08/14/2015 18:40	WG809088
Bromomethane	ND		2.80	500	08/14/2015 18:40	WG809088
n-Butylbenzene	3.04		0.559	500	08/14/2015 18:40	WG809088
sec-Butylbenzene	0.638		0.559	500	08/14/2015 18:40	WG809088
tert-Butylbenzene	ND		0.559	500	08/14/2015 18:40	WG809088
Carbon tetrachloride	ND		0.559	500	08/14/2015 18:40	WG809088
Chlorobenzene	ND		0.559	500	08/14/2015 18:40	WG809088
Chlorodibromomethane	ND		0.559	500	08/14/2015 18:40	WG809088
Chloroethane	ND		2.80	500	08/14/2015 18:40	WG809088
2-Chloroethyl vinyl ether	ND		28.0	500	08/14/2015 18:40	WG809088
Chloroform	ND		2.80	500	08/14/2015 18:40	WG809088
Chloromethane	ND		1.40	500	08/14/2015 18:40	WG809088
2-Chlorotoluene	ND		0.559	500	08/14/2015 18:40	WG809088
4-Chlorotoluene	ND		0.559	500	08/14/2015 18:40	WG809088
1,2-Dibromo-3-Chloropropane	ND		2.80	500	08/14/2015 18:40	WG809088
1,2-Dibromoethane	ND		0.559	500	08/14/2015 18:40	WG809088
Dibromomethane	ND		0.559	500	08/14/2015 18:40	WG809088
1,2-Dichlorobenzene	ND		0.559	500	08/14/2015 18:40	WG809088
1,3-Dichlorobenzene	ND		0.559	500	08/14/2015 18:40	WG809088
1,4-Dichlorobenzene	ND		0.559	500	08/14/2015 18:40	WG809088
Dichlorodifluoromethane	ND		2.80	500	08/14/2015 18:40	WG809088
1,1-Dichloroethane	ND		0.559	500	08/14/2015 18:40	WG809088
1,2-Dichloroethane	ND		0.559	500	08/14/2015 18:40	WG809088
1,1-Dichloroethene	ND		0.559	500	08/14/2015 18:40	WG809088
cis-1,2-Dichloroethene	ND		0.559	500	08/14/2015 18:40	WG809088
trans-1,2-Dichloroethene	ND		0.559	500	08/14/2015 18:40	WG809088
1,2-Dichloropropane	ND		0.559	500	08/14/2015 18:40	WG809088
1,1-Dichloropropene	ND		0.559	500	08/14/2015 18:40	WG809088
1,3-Dichloropropane	ND		0.559	500	08/14/2015 18:40	WG809088
cis-1,3-Dichloropropene	ND		0.559	500	08/14/2015 18:40	WG809088
trans-1,3-Dichloropropene	ND		0.559	500	08/14/2015 18:40	WG809088
2,2-Dichloropropane	ND		0.559	500	08/14/2015 18:40	WG809088
Dicyclopentadiene	74.6		0.559	500	08/14/2015 18:40	WG809088
Di-isopropyl ether	ND	J4	0.559	500	08/14/2015 18:40	WG809088
Ethylbenzene	1.56		0.559	500	08/14/2015 18:40	WG809088
Hexachloro-1,3-butadiene	ND		0.559	500	08/14/2015 18:40	WG809088
Isopropylbenzene	1.19		0.559	500	08/14/2015 18:40	WG809088
p-Isopropyltoluene	ND		0.559	500	08/14/2015 18:40	WG809088
2-Butanone (MEK)	ND		5.59	500	08/14/2015 18:40	WG809088
Methylene Chloride	ND		2.80	500	08/14/2015 18:40	WG809088
4-Methyl-2-pentanone (MIBK)	ND		5.59	500	08/14/2015 18:40	WG809088
Methyl tert-butyl ether	ND		0.559	500	08/14/2015 18:40	WG809088
Naphthalene	383		55.9	10000	08/17/2015 13:25	WG809095
n-Propylbenzene	8.21		0.559	500	08/14/2015 18:40	WG809088
Styrene	0.664		0.559	500	08/14/2015 18:40	WG809088

Volatile Organic Compounds (GC/MS) by Method 8260B

Analyte	Result (dry) mg/kg	Qualifier	RDL (dry) mg/kg	Dilution	Analysis date / time	Batch
1,1,1,2-Tetrachloroethane	ND		0.559	500	08/14/2015 18:40	WG809088
1,1,2,2-Tetrachloroethane	ND		0.559	500	08/14/2015 18:40	WG809088
1,1,2-Trichlorotrifluoroethane	ND		0.559	500	08/14/2015 18:40	WG809088
Tetrachloroethene	ND		0.559	500	08/14/2015 18:40	WG809088
Toluene	ND		2.80	500	08/14/2015 18:40	WG809088
1,2,3-Trichlorobenzene	ND		0.559	500	08/14/2015 18:40	WG809088
1,2,4-Trichlorobenzene	ND		0.559	500	08/14/2015 18:40	WG809088
1,1,1-Trichloroethane	ND		0.559	500	08/14/2015 18:40	WG809088
1,1,2-Trichloroethane	ND		0.559	500	08/14/2015 18:40	WG809088
Trichloroethene	ND		0.559	500	08/14/2015 18:40	WG809088
Trichlorofluoromethane	ND		2.80	500	08/14/2015 18:40	WG809088
1,2,3-Trichloropropane	ND		1.40	500	08/14/2015 18:40	WG809088
1,2,4-Trimethylbenzene	71.7		0.559	500	08/14/2015 18:40	WG809088
1,2,3-Trimethylbenzene	36.4		0.559	500	08/14/2015 18:40	WG809088
1,3,5-Trimethylbenzene	24.7		0.559	500	08/14/2015 18:40	WG809088
Vinyl chloride	ND		0.559	500	08/14/2015 18:40	WG809088
Xylenes, Total	10.5		1.68	500	08/14/2015 18:40	WG809088
(S) Toluene-d8	*99.8*		*88.7-115*		*08/14/2015 18:40*	WG809088
(S) Dibromofluoromethane	*99.6*		*76.3-123*		*08/14/2015 18:40*	WG809088
(S) 4-Bromofluorobenzene	*96.6*		*69.7-129*		*08/14/2015 18:40*	WG809088

Semi Volatile Organic Compounds (GC/MS) by Method 8270C

Analyte	Result (dry) mg/kg	Qualifier	RDL (dry) mg/kg	Dilution	Analysis date / time	Batch
Acenaphthene	ND		0.0369	1	08/17/2015 12:34	WG809054
Acenaphthylene	ND		0.0369	1	08/17/2015 12:34	WG809054
Anthracene	ND		0.0369	1	08/17/2015 12:34	WG809054
Benzidine	ND		0.372	1	08/17/2015 12:34	WG809054
Benzo(a)anthracene	ND		0.0369	1	08/17/2015 12:34	WG809054
Benzo(b)fluoranthene	ND		0.0369	1	08/17/2015 12:34	WG809054
Benzo(k)fluoranthene	ND		0.0369	1	08/17/2015 12:34	WG809054
Benzo(g,h,i)perylene	ND		0.0369	1	08/17/2015 12:34	WG809054
Benzo(a)pyrene	ND		0.0369	1	08/17/2015 12:34	WG809054
Bis(2-chlorethoxy)methane	ND		7.45	20	08/17/2015 15:32	WG809054
Bis(2-chloroethyl)ether	ND		7.45	20	08/17/2015 15:32	WG809054
Bis(2-chloroisopropyl)ether	ND		7.45	20	08/17/2015 15:32	WG809054
4-Bromophenyl-phenylether	ND		0.372	1	08/17/2015 12:34	WG809054
2-Chloronaphthalene	ND		0.0369	1	08/17/2015 12:34	WG809054
4-Chlorophenyl-phenylether	ND		0.372	1	08/17/2015 12:34	WG809054
Chrysene	ND		0.0369	1	08/17/2015 12:34	WG809054
Dibenz(a,h)anthracene	ND		0.0369	1	08/17/2015 12:34	WG809054
3,3-Dichlorobenzidine	ND		0.372	1	08/17/2015 12:34	WG809054
2,4-Dinitrotoluene	ND		0.372	1	08/17/2015 12:34	WG809054
2,6-Dinitrotoluene	ND		0.372	1	08/17/2015 12:34	WG809054
Fluoranthene	ND		0.0369	1	08/17/2015 12:34	WG809054
Fluorene	ND		0.0369	1	08/17/2015 12:34	WG809054
Hexachlorobenzene	ND		0.372	1	08/17/2015 12:34	WG809054
Hexachloro-1,3-butadiene	ND		7.45	20	08/17/2015 15:32	WG809054
Hexachlorocyclopentadiene	ND		0.372	1	08/17/2015 12:34	WG809054
Hexachloroethane	ND		7.45	20	08/17/2015 15:32	WG809054
Indeno(1,2,3-cd)pyrene	ND		0.0369	1	08/17/2015 12:34	WG809054
Isophorone	ND		7.45	20	08/17/2015 15:32	WG809054
Naphthalene	126		3.69	100	08/17/2015 16:53	WG809054
Nitrobenzene	ND		7.45	20	08/17/2015 15:32	WG809054
n-Nitrosodimethylamine	ND		7.45	20	08/17/2015 15:32	WG809054
n-Nitrosodiphenylamine	ND		0.372	1	08/17/2015 12:34	WG809054

Semi Volatile Organic Compounds (GC/MS) by Method 8270C

Analyte	Result (dry) mg/kg	Qualifier	RDL (dry) mg/kg	Dilution	Analysis date / time	Batch
n-Nitrosodi-n-propylamine	ND		7.45	20	08/17/2015 15:32	WG809054
Phenanthrene	0.0379		0.0369	1	08/17/2015 12:34	WG809054
Benzylbutyl phthalate	ND		0.372	1	08/17/2015 12:34	WG809054
Bis(2-ethylhexyl)phthalate	ND		0.372	1	08/17/2015 12:34	WG809054
Di-n-butyl phthalate	ND		0.372	1	08/17/2015 12:34	WG809054
Diethyl phthalate	ND		0.372	1	08/17/2015 12:34	WG809054
Dimethyl phthalate	ND		0.372	1	08/17/2015 12:34	WG809054
Di-n-octyl phthalate	ND		0.372	1	08/17/2015 12:34	WG809054
Pyrene	ND		0.0369	1	08/17/2015 12:34	WG809054
1,2,4-Trichlorobenzene	ND		7.45	20	08/17/2015 15:32	WG809054
4-Chloro-3-methylphenol	ND		7.45	20	08/17/2015 15:32	WG809054
2-Chlorophenol	ND		7.45	20	08/17/2015 15:32	WG809054
2,4-Dichlorophenol	ND		7.45	20	08/17/2015 15:32	WG809054
2,4-Dimethylphenol	ND		7.45	20	08/17/2015 15:32	WG809054
4,6-Dinitro-2-methylphenol	ND		0.372	1	08/17/2015 12:34	WG809054
2,4-Dinitrophenol	ND		0.372	1	08/17/2015 12:34	WG809054
2-Nitrophenol	ND		7.45	20	08/17/2015 15:32	WG809054
4-Nitrophenol	ND		0.372	1	08/17/2015 12:34	WG809054
Pentachlorophenol	ND		0.372	1	08/17/2015 12:34	WG809054
Phenol	ND		7.45	20	08/17/2015 15:32	WG809054
2,4,6-Trichlorophenol	ND		0.372	1	08/17/2015 12:34	WG809054
(S) 2-Fluorophenol	*47.8*	J7	*21.1-116*		*08/17/2015 15:32*	WG809054
(S) Phenol-d5	*62.5*	J7	*26.3-121*		*08/17/2015 15:32*	WG809054
(S) Nitrobenzene-d5	*87.0*	J7	*21.9-129*		*08/17/2015 15:32*	WG809054
(S) 2-Fluorobiphenyl	*60.1*		*34.9-129*		*08/17/2015 12:34*	WG809054
(S) 2,4,6-Tribromophenol	*94.4*		*21.6-142*		*08/17/2015 12:34*	WG809054
(S) p-Terphenyl-d14	*139*	J1	*21.5-128*		*08/17/2015 12:34*	WG809054

Sample Narrative:

8270C L782656-12 WG809054: Dilution due to matrix

Total Solids by Method 2540 G-2011

Analyte	Result %	Qualifier	Dilution	Analysis date / time	Batch
Total Solids	75.6		1	08/15/2015 09:26	WG809041

Mercury by Method 7471A

Analyte	Result (dry) mg/kg	Qualifier	RDL (dry) mg/kg	Dilution	Analysis date / time	Batch
Mercury	0.0487		0.0264	1	08/15/2015 10:19	WG809114

Metals (ICP) by Method 6010B

Analyte	Result (dry) mg/kg	Qualifier	RDL (dry) mg/kg	Dilution	Analysis date / time	Batch
Arsenic	4.90		2.64	1	08/14/2015 16:37	WG809022
Barium	31.8		0.661	1	08/14/2015 16:37	WG809022
Cadmium	ND		0.661	1	08/14/2015 16:37	WG809022
Chromium	12.9		1.32	1	08/14/2015 16:37	WG809022
Lead	11.1		0.661	1	08/14/2015 16:37	WG809022
Selenium	ND		2.64	1	08/14/2015 16:37	WG809022
Silver	ND		1.32	1	08/14/2015 16:37	WG809022

Volatile Organic Compounds (GC/MS) by Method 8260B

Analyte	Result (dry) mg/kg	Qualifier	RDL (dry) mg/kg	Dilution	Analysis date / time	Batch
Acetone	ND		0.331	5	08/14/2015 19:03	WG809088
Acrylonitrile	ND		0.0661	5	08/14/2015 19:03	WG809088
Benzene	ND		0.00661	5	08/14/2015 19:03	WG809088
Bromobenzene	ND		0.00661	5	08/14/2015 19:03	WG809088
Bromodichloromethane	ND		0.00661	5	08/14/2015 19:03	WG809088
Bromoform	ND		0.00661	5	08/14/2015 19:03	WG809088
Bromomethane	ND		0.0331	5	08/14/2015 19:03	WG809088
n-Butylbenzene	ND		0.00661	5	08/14/2015 19:03	WG809088
sec-Butylbenzene	ND		0.00661	5	08/14/2015 19:03	WG809088
tert-Butylbenzene	ND		0.00661	5	08/14/2015 19:03	WG809088
Carbon tetrachloride	ND		0.00661	5	08/14/2015 19:03	WG809088
Chlorobenzene	ND		0.00661	5	08/14/2015 19:03	WG809088
Chlorodibromomethane	ND		0.00661	5	08/14/2015 19:03	WG809088
Chloroethane	ND		0.0331	5	08/14/2015 19:03	WG809088
2-Chloroethyl vinyl ether	ND		0.331	5	08/14/2015 19:03	WG809088
Chloroform	ND		0.0331	5	08/14/2015 19:03	WG809088
Chloromethane	ND		0.0165	5	08/14/2015 19:03	WG809088
2-Chlorotoluene	ND		0.00661	5	08/14/2015 19:03	WG809088
4-Chlorotoluene	ND		0.00661	5	08/14/2015 19:03	WG809088
1,2-Dibromo-3-Chloropropane	ND		0.0331	5	08/14/2015 19:03	WG809088
1,2-Dibromoethane	ND		0.00661	5	08/14/2015 19:03	WG809088
Dibromomethane	ND		0.00661	5	08/14/2015 19:03	WG809088
1,2-Dichlorobenzene	ND		0.00661	5	08/14/2015 19:03	WG809088
1,3-Dichlorobenzene	ND		0.00661	5	08/14/2015 19:03	WG809088
1,4-Dichlorobenzene	ND		0.00661	5	08/14/2015 19:03	WG809088
Dichlorodifluoromethane	ND		0.0331	5	08/14/2015 19:03	WG809088
1,1-Dichloroethane	ND		0.00661	5	08/14/2015 19:03	WG809088
1,2-Dichloroethane	ND		0.00661	5	08/14/2015 19:03	WG809088
1,1-Dichloroethene	ND		0.00661	5	08/14/2015 19:03	WG809088
cis-1,2-Dichloroethene	ND		0.00661	5	08/14/2015 19:03	WG809088
trans-1,2-Dichloroethene	ND		0.00661	5	08/14/2015 19:03	WG809088
1,2-Dichloropropane	ND		0.00661	5	08/14/2015 19:03	WG809088
1,1-Dichloropropene	ND		0.00661	5	08/14/2015 19:03	WG809088

Volatile Organic Compounds (GC/MS) by Method 8260B

Analyte	Result (dry) mg/kg	Qualifier	RDL (dry) mg/kg	Dilution	Analysis date / time	Batch
1,3-Dichloropropane	ND		0.00661	5	08/14/2015 19:03	WG809088
cis-1,3-Dichloropropene	ND		0.00661	5	08/14/2015 19:03	WG809088
trans-1,3-Dichloropropene	ND		0.00661	5	08/14/2015 19:03	WG809088
2,2-Dichloropropane	ND		0.00661	5	08/14/2015 19:03	WG809088
Dicyclopentadiene	0.0342		0.00661	5	08/14/2015 19:03	WG809088
Di-isopropyl ether	ND	J4	0.00661	5	08/14/2015 19:03	WG809088
Ethylbenzene	ND		0.00661	5	08/14/2015 19:03	WG809088
Hexachloro-1,3-butadiene	ND		0.00661	5	08/14/2015 19:03	WG809088
Isopropylbenzene	ND		0.00661	5	08/14/2015 19:03	WG809088
p-Isopropyltoluene	ND		0.00661	5	08/14/2015 19:03	WG809088
2-Butanone (MEK)	ND		0.0661	5	08/14/2015 19:03	WG809088
Methylene Chloride	ND		0.0331	5	08/14/2015 19:03	WG809088
4-Methyl-2-pentanone (MIBK)	ND		0.0661	5	08/14/2015 19:03	WG809088
Methyl tert-butyl ether	ND		0.00661	5	08/14/2015 19:03	WG809088
Naphthalene	ND		0.0331	5	08/17/2015 13:46	WG809095
n-Propylbenzene	ND		0.00661	5	08/14/2015 19:03	WG809088
Styrene	ND		0.00661	5	08/14/2015 19:03	WG809088
1,1,1,2-Tetrachloroethane	ND		0.00661	5	08/14/2015 19:03	WG809088
1,1,2,2-Tetrachloroethane	ND		0.00661	5	08/14/2015 19:03	WG809088
1,1,2-Trichlorotrifluoroethane	ND		0.00661	5	08/14/2015 19:03	WG809088
Tetrachloroethene	ND		0.00661	5	08/14/2015 19:03	WG809088
Toluene	ND		0.0331	5	08/14/2015 19:03	WG809088
1,2,3-Trichlorobenzene	ND		0.00661	5	08/14/2015 19:03	WG809088
1,2,4-Trichlorobenzene	ND		0.00661	5	08/14/2015 19:03	WG809088
1,1,1-Trichloroethane	ND		0.00661	5	08/14/2015 19:03	WG809088
1,1,2-Trichloroethane	ND		0.00661	5	08/14/2015 19:03	WG809088
Trichloroethene	ND		0.00661	5	08/14/2015 19:03	WG809088
Trichlorofluoromethane	ND		0.0331	5	08/14/2015 19:03	WG809088
1,2,3-Trichloropropane	ND		0.0165	5	08/14/2015 19:03	WG809088
1,2,4-Trimethylbenzene	0.00797		0.00661	5	08/14/2015 19:03	WG809088
1,2,3-Trimethylbenzene	ND		0.00661	5	08/14/2015 19:03	WG809088
1,3,5-Trimethylbenzene	ND		0.00661	5	08/14/2015 19:03	WG809088
Vinyl chloride	ND		0.00661	5	08/14/2015 19:03	WG809088
Xylenes, Total	ND		0.0198	5	08/14/2015 19:03	WG809088
(S) Toluene-d8	*97.5*		*88.7-115*		*08/14/2015 19:03*	WG809088
(S) Dibromofluoromethane	*101*		*76.3-123*		*08/14/2015 19:03*	WG809088
(S) 4-Bromofluorobenzene	*84.9*		*69.7-129*		*08/14/2015 19:03*	WG809088

Semi Volatile Organic Compounds (GC/MS) by Method 8270C

Analyte	Result (dry) mg/kg	Qualifier	RDL (dry) mg/kg	Dilution	Analysis date / time	Batch
Acenaphthene	ND		0.0436	1	08/17/2015 12:57	WG809054
Acenaphthylene	ND		0.0436	1	08/17/2015 12:57	WG809054
Anthracene	ND		0.0436	1	08/17/2015 12:57	WG809054
Benzidine	ND		0.440	1	08/17/2015 12:57	WG809054
Benzo(a)anthracene	ND		0.0436	1	08/17/2015 12:57	WG809054
Benzo(b)fluoranthene	ND		0.0436	1	08/17/2015 12:57	WG809054
Benzo(k)fluoranthene	ND		0.0436	1	08/17/2015 12:57	WG809054
Benzo(g,h,i)perylene	ND		0.0436	1	08/17/2015 12:57	WG809054
Benzo(a)pyrene	ND		0.0436	1	08/17/2015 12:57	WG809054
Bis(2-chlorethoxy)methane	ND		0.440	1	08/17/2015 12:57	WG809054
Bis(2-chloroethyl)ether	ND		0.440	1	08/17/2015 12:57	WG809054
Bis(2-chloroisopropyl)ether	ND		0.440	1	08/17/2015 12:57	WG809054
4-Bromophenyl-phenylether	ND		0.440	1	08/17/2015 12:57	WG809054
2-Chloronaphthalene	ND		0.0436	1	08/17/2015 12:57	WG809054
4-Chlorophenyl-phenylether	ND		0.440	1	08/17/2015 12:57	WG809054

Semi Volatile Organic Compounds (GC/MS) by Method 8270C

Analyte	Result (dry) mg/kg	Qualifier	RDL (dry) mg/kg	Dilution	Analysis date / time	Batch
Chrysene	ND		0.0436	1	08/17/2015 12:57	WG809054
Dibenz(a,h)anthracene	ND		0.0436	1	08/17/2015 12:57	WG809054
3,3-Dichlorobenzidine	ND		0.440	1	08/17/2015 12:57	WG809054
2,4-Dinitrotoluene	ND		0.440	1	08/17/2015 12:57	WG809054
2,6-Dinitrotoluene	ND		0.440	1	08/17/2015 12:57	WG809054
Fluoranthene	ND		0.0436	1	08/17/2015 12:57	WG809054
Fluorene	ND		0.0436	1	08/17/2015 12:57	WG809054
Hexachlorobenzene	ND		0.440	1	08/17/2015 12:57	WG809054
Hexachloro-1,3-butadiene	ND		0.440	1	08/17/2015 12:57	WG809054
Hexachlorocyclopentadiene	ND		0.440	1	08/17/2015 12:57	WG809054
Hexachloroethane	ND		0.440	1	08/17/2015 12:57	WG809054
Indeno(1,2,3-cd)pyrene	ND		0.0436	1	08/17/2015 12:57	WG809054
Isophorone	ND		0.440	1	08/17/2015 12:57	WG809054
Naphthalene	0.0490		0.0436	1	08/17/2015 12:57	WG809054
Nitrobenzene	ND		0.440	1	08/17/2015 12:57	WG809054
n-Nitrosodimethylamine	ND		0.440	1	08/17/2015 12:57	WG809054
n-Nitrosodiphenylamine	ND		0.440	1	08/17/2015 12:57	WG809054
n-Nitrosodi-n-propylamine	ND		0.440	1	08/17/2015 12:57	WG809054
Phenanthrene	ND		0.0436	1	08/17/2015 12:57	WG809054
Benzylbutyl phthalate	ND		0.440	1	08/17/2015 12:57	WG809054
Bis(2-ethylhexyl)phthalate	ND		0.440	1	08/17/2015 12:57	WG809054
Di-n-butyl phthalate	ND		0.440	1	08/17/2015 12:57	WG809054
Diethyl phthalate	ND		0.440	1	08/17/2015 12:57	WG809054
Dimethyl phthalate	ND		0.440	1	08/17/2015 12:57	WG809054
Di-n-octyl phthalate	ND		0.440	1	08/17/2015 12:57	WG809054
Pyrene	ND		0.0436	1	08/17/2015 12:57	WG809054
1,2,4-Trichlorobenzene	ND		0.440	1	08/17/2015 12:57	WG809054
4-Chloro-3-methylphenol	ND		0.440	1	08/17/2015 12:57	WG809054
2-Chlorophenol	ND		0.440	1	08/17/2015 12:57	WG809054
2,4-Dichlorophenol	ND		0.440	1	08/17/2015 12:57	WG809054
2,4-Dimethylphenol	ND		0.440	1	08/17/2015 12:57	WG809054
4,6-Dinitro-2-methylphenol	ND		0.440	1	08/17/2015 12:57	WG809054
2,4-Dinitrophenol	ND		0.440	1	08/17/2015 12:57	WG809054
2-Nitrophenol	ND		0.440	1	08/17/2015 12:57	WG809054
4-Nitrophenol	ND		0.440	1	08/17/2015 12:57	WG809054
Pentachlorophenol	ND		0.440	1	08/17/2015 12:57	WG809054
Phenol	ND		0.440	1	08/17/2015 12:57	WG809054
2,4,6-Trichlorophenol	ND		0.440	1	08/17/2015 12:57	WG809054
(S) 2-Fluorophenol	*68.9*		*21.1-116*		*08/17/2015 12:57*	WG809054
(S) Phenol-d5	*70.1*		*26.3-121*		*08/17/2015 12:57*	WG809054
(S) Nitrobenzene-d5	*67.4*		*21.9-129*		*08/17/2015 12:57*	WG809054
(S) 2-Fluorobiphenyl	*67.6*		*34.9-129*		*08/17/2015 12:57*	WG809054
(S) 2,4,6-Tribromophenol	*88.8*		*21.6-142*		*08/17/2015 12:57*	WG809054
(S) p-Terphenyl-d14	*73.1*		*21.5-128*		*08/17/2015 12:57*	WG809054

Total Solids by Method 2540 G-2011

Analyte	Result %	Qualifier	Dilution	Analysis date / time	Batch
Total Solids	75.5		1	08/15/2015 09:27	WG809041

Volatile Organic Compounds (GC/MS) by Method 8260B

Analyte	Result (dry) mg/kg	Qualifier	RDL (dry) mg/kg	Dilution	Analysis date / time	Batch
Acetone	ND		33.1	500	08/14/2015 19:26	WG809088
Acrylonitrile	ND		6.62	500	08/14/2015 19:26	WG809088
Benzene	ND		0.662	500	08/14/2015 19:26	WG809088
Bromobenzene	ND		0.662	500	08/14/2015 19:26	WG809088
Bromodichloromethane	ND		0.662	500	08/14/2015 19:26	WG809088
Bromoform	ND		0.662	500	08/14/2015 19:26	WG809088
Bromomethane	ND		3.31	500	08/14/2015 19:26	WG809088
n-Butylbenzene	7.71		0.662	500	08/14/2015 19:26	WG809088
sec-Butylbenzene	1.61		0.662	500	08/14/2015 19:26	WG809088
tert-Butylbenzene	ND		0.662	500	08/14/2015 19:26	WG809088
Carbon tetrachloride	ND		0.662	500	08/14/2015 19:26	WG809088
Chlorobenzene	ND		0.662	500	08/14/2015 19:26	WG809088
Chlorodibromomethane	ND		0.662	500	08/14/2015 19:26	WG809088
Chloroethane	ND		3.31	500	08/14/2015 19:26	WG809088
2-Chloroethyl vinyl ether	ND		33.1	500	08/14/2015 19:26	WG809088
Chloroform	ND		3.31	500	08/14/2015 19:26	WG809088
Chloromethane	ND		1.66	500	08/14/2015 19:26	WG809088
2-Chlorotoluene	ND		0.662	500	08/14/2015 19:26	WG809088
4-Chlorotoluene	ND		0.662	500	08/14/2015 19:26	WG809088
1,2-Dibromo-3-Chloropropane	ND		3.31	500	08/14/2015 19:26	WG809088
1,2-Dibromoethane	ND		0.662	500	08/14/2015 19:26	WG809088
Dibromomethane	ND		0.662	500	08/14/2015 19:26	WG809088
1,2-Dichlorobenzene	ND		0.662	500	08/14/2015 19:26	WG809088
1,3-Dichlorobenzene	ND		0.662	500	08/14/2015 19:26	WG809088
1,4-Dichlorobenzene	ND		0.662	500	08/14/2015 19:26	WG809088
Dichlorodifluoromethane	ND		3.31	500	08/14/2015 19:26	WG809088
1,1-Dichloroethane	ND		0.662	500	08/14/2015 19:26	WG809088
1,2-Dichloroethane	ND		0.662	500	08/14/2015 19:26	WG809088
1,1-Dichloroethene	ND		0.662	500	08/14/2015 19:26	WG809088
cis-1,2-Dichloroethene	ND		0.662	500	08/14/2015 19:26	WG809088
trans-1,2-Dichloroethene	ND		0.662	500	08/14/2015 19:26	WG809088
1,2-Dichloropropane	ND		0.662	500	08/14/2015 19:26	WG809088
1,1-Dichloropropene	ND		0.662	500	08/14/2015 19:26	WG809088
1,3-Dichloropropane	ND		0.662	500	08/14/2015 19:26	WG809088
cis-1,3-Dichloropropene	ND		0.662	500	08/14/2015 19:26	WG809088
trans-1,3-Dichloropropene	ND		0.662	500	08/14/2015 19:26	WG809088
2,2-Dichloropropane	ND		0.662	500	08/14/2015 19:26	WG809088
Dicyclopentadiene	654		13.2	10000	08/17/2015 12:46	WG809612
Di-isopropyl ether	ND	J4	0.662	500	08/14/2015 19:26	WG809088
Ethylbenzene	2.93		0.662	500	08/14/2015 19:26	WG809088
Hexachloro-1,3-butadiene	ND		0.662	500	08/14/2015 19:26	WG809088
Isopropylbenzene	3.04		0.662	500	08/14/2015 19:26	WG809088
p-Isopropyltoluene	ND		0.662	500	08/14/2015 19:26	WG809088
2-Butanone (MEK)	ND		6.62	500	08/14/2015 19:26	WG809088
Methylene Chloride	ND		3.31	500	08/14/2015 19:26	WG809088
4-Methyl-2-pentanone (MIBK)	ND		6.62	500	08/14/2015 19:26	WG809088
Methyl tert-butyl ether	ND		0.662	500	08/14/2015 19:26	WG809088
Naphthalene	573		66.2	10000	08/17/2015 12:46	WG809612
n-Propylbenzene	20.3		0.662	500	08/14/2015 19:26	WG809088
Styrene	1.98		0.662	500	08/14/2015 19:26	WG809088

Volatile Organic Compounds (GC/MS) by Method 8260B

Analyte	Result (dry) mg/kg	Qualifier	RDL (dry) mg/kg	Dilution	Analysis date / time	Batch
1,1,1,2-Tetrachloroethane	ND		0.662	500	08/14/2015 19:26	WG809088
1,1,2,2-Tetrachloroethane	ND		0.662	500	08/14/2015 19:26	WG809088
1,1,2-Trichlorotrifluoroethane	ND		0.662	500	08/14/2015 19:26	WG809088
Tetrachloroethene	ND		0.662	500	08/14/2015 19:26	WG809088
Toluene	ND		3.31	500	08/14/2015 19:26	WG809088
1,2,3-Trichlorobenzene	ND		0.662	500	08/14/2015 19:26	WG809088
1,2,4-Trichlorobenzene	ND		0.662	500	08/14/2015 19:26	WG809088
1,1,1-Trichloroethane	ND		0.662	500	08/14/2015 19:26	WG809088
1,1,2-Trichloroethane	ND		0.662	500	08/14/2015 19:26	WG809088
Trichloroethene	ND		0.662	500	08/14/2015 19:26	WG809088
Trichlorofluoromethane	ND		3.31	500	08/14/2015 19:26	WG809088
1,2,3-Trichloropropane	ND		1.66	500	08/14/2015 19:26	WG809088
1,2,4-Trimethylbenzene	540		13.2	10000	08/17/2015 12:46	WG809612
1,2,3-Trimethylbenzene	94.4		0.662	500	08/14/2015 19:26	WG809088
1,3,5-Trimethylbenzene	66.0		0.662	500	08/14/2015 19:26	WG809088
Vinyl chloride	ND		0.662	500	08/14/2015 19:26	WG809088
Xylenes, Total	27.4		1.99	500	08/14/2015 19:26	WG809088
(S) Toluene-d8	*98.8*		*88.7-115*		*08/14/2015 19:26*	WG809088
(S) Dibromofluoromethane	*98.0*		*76.3-123*		*08/14/2015 19:26*	WG809088
(S) 4-Bromofluorobenzene	*103*		*69.7-129*		*08/14/2015 19:26*	WG809088

Semi Volatile Organic Compounds (GC/MS) by Method 8270C

Analyte	Result (dry) mg/kg	Qualifier	RDL (dry) mg/kg	Dilution	Analysis date / time	Batch
Acenaphthene	ND		0.0437	1	08/17/2015 13:20	WG809054
Acenaphthylene	ND		0.0437	1	08/17/2015 13:20	WG809054
Anthracene	0.118		0.0437	1	08/17/2015 13:20	WG809054
Benzidine	ND		0.441	1	08/17/2015 13:20	WG809054
Benzo(a)anthracene	ND		0.0437	1	08/17/2015 13:20	WG809054
Benzo(b)fluoranthene	ND		0.0437	1	08/17/2015 13:20	WG809054
Benzo(k)fluoranthene	ND		0.0437	1	08/17/2015 13:20	WG809054
Benzo(g,h,i)perylene	ND		0.0437	1	08/17/2015 13:20	WG809054
Benzo(a)pyrene	ND		0.0437	1	08/17/2015 13:20	WG809054
Bis(2-chlorethoxy)methane	ND		8.82	20	08/17/2015 15:55	WG809054
Bis(2-chloroethyl)ether	ND		8.82	20	08/17/2015 15:55	WG809054
Bis(2-chloroisopropyl)ether	ND		8.82	20	08/17/2015 15:55	WG809054
4-Bromophenyl-phenylether	ND		0.441	1	08/17/2015 13:20	WG809054
2-Chloronaphthalene	ND		0.0437	1	08/17/2015 13:20	WG809054
4-Chlorophenyl-phenylether	ND		0.441	1	08/17/2015 13:20	WG809054
Chrysene	ND		0.0437	1	08/17/2015 13:20	WG809054
Dibenz(a,h)anthracene	ND		0.0437	1	08/17/2015 13:20	WG809054
3,3-Dichlorobenzidine	ND		0.441	1	08/17/2015 13:20	WG809054
2,4-Dinitrotoluene	ND		0.441	1	08/17/2015 13:20	WG809054
2,6-Dinitrotoluene	ND		0.441	1	08/17/2015 13:20	WG809054
Fluoranthene	ND		0.0437	1	08/17/2015 13:20	WG809054
Fluorene	ND		0.0437	1	08/17/2015 13:20	WG809054
Hexachlorobenzene	ND		0.441	1	08/17/2015 13:20	WG809054
Hexachloro-1,3-butadiene	ND		8.82	20	08/17/2015 15:55	WG809054
Hexachlorocyclopentadiene	ND		0.441	1	08/17/2015 13:20	WG809054
Hexachloroethane	ND		8.82	20	08/17/2015 15:55	WG809054
Indeno(1,2,3-cd)pyrene	ND		0.0437	1	08/17/2015 13:20	WG809054
Isophorone	ND		8.82	20	08/17/2015 15:55	WG809054
Naphthalene	189		4.37	100	08/17/2015 17:16	WG809054
Nitrobenzene	ND		8.82	20	08/17/2015 15:55	WG809054
n-Nitrosodimethylamine	ND		8.82	20	08/17/2015 15:55	WG809054
n-Nitrosodiphenylamine	ND		0.441	1	08/17/2015 13:20	WG809054

Semi Volatile Organic Compounds (GC/MS) by Method 8270C

Analyte	Result (dry) mg/kg	Qualifier	RDL (dry) mg/kg	Dilution	Analysis date / time	Batch
n-Nitrosodi-n-propylamine	ND		8.82	20	08/17/2015 15:55	WG809054
Phenanthrene	0.0690		0.0437	1	08/17/2015 13:20	WG809054
Benzylbutyl phthalate	ND		0.441	1	08/17/2015 13:20	WG809054
Bis(2-ethylhexyl)phthalate	ND		0.441	1	08/17/2015 13:20	WG809054
Di-n-butyl phthalate	ND		0.441	1	08/17/2015 13:20	WG809054
Diethyl phthalate	ND		0.441	1	08/17/2015 13:20	WG809054
Dimethyl phthalate	ND		0.441	1	08/17/2015 13:20	WG809054
Di-n-octyl phthalate	ND		0.441	1	08/17/2015 13:20	WG809054
Pyrene	ND		0.0437	1	08/17/2015 13:20	WG809054
1,2,4-Trichlorobenzene	ND		8.82	20	08/17/2015 15:55	WG809054
4-Chloro-3-methylphenol	ND		8.82	20	08/17/2015 15:55	WG809054
2-Chlorophenol	ND		8.82	20	08/17/2015 15:55	WG809054
2,4-Dichlorophenol	ND		8.82	20	08/17/2015 15:55	WG809054
2,4-Dimethylphenol	ND		8.82	20	08/17/2015 15:55	WG809054
4,6-Dinitro-2-methylphenol	ND		0.441	1	08/17/2015 13:20	WG809054
2,4-Dinitrophenol	ND		0.441	1	08/17/2015 13:20	WG809054
2-Nitrophenol	ND		8.82	20	08/17/2015 15:55	WG809054
4-Nitrophenol	ND		0.441	1	08/17/2015 13:20	WG809054
Pentachlorophenol	ND		0.441	1	08/17/2015 13:20	WG809054
Phenol	ND		8.82	20	08/17/2015 15:55	WG809054
2,4,6-Trichlorophenol	ND		0.441	1	08/17/2015 13:20	WG809054
(S) 2-Fluorophenol	*69.3*	J7	*21.1-116*		*08/17/2015 15:55*	WG809054
(S) Phenol-d5	*79.7*	J7	*26.3-121*		*08/17/2015 15:55*	WG809054
(S) Nitrobenzene-d5	*133*	J7	*21.9-129*		*08/17/2015 15:55*	WG809054
(S) 2-Fluorobiphenyl	*53.1*		*34.9-129*		*08/17/2015 13:20*	WG809054
(S) 2,4,6-Tribromophenol	*84.9*		*21.6-142*		*08/17/2015 13:20*	WG809054
(S) p-Terphenyl-d14	*179*	J1	*21.5-128*		*08/17/2015 13:20*	WG809054

Sample Narrative:

8270C L782656-14 WG809054: Dilution due to matrix

Total Solids by Method 2540 G-2011

Analyte	Result %	Qualifier	Dilution	Analysis date / time	Batch
Total Solids	85.6		1	08/15/2015 09:28	WG809041

Mercury by Method 7471A

Analyte	Result (dry) mg/kg	Qualifier	RDL (dry) mg/kg	Dilution	Analysis date / time	Batch
Mercury	0.0740		0.0234	1	08/15/2015 10:21	WG809114

Metals (ICP) by Method 6010B

Analyte	Result (dry) mg/kg	Qualifier	RDL (dry) mg/kg	Dilution	Analysis date / time	Batch
Arsenic	2.50		2.34	1	08/14/2015 16:40	WG809022
Barium	39.4		0.584	1	08/14/2015 16:40	WG809022
Cadmium	ND		0.584	1	08/14/2015 16:40	WG809022
Chromium	6.84		1.17	1	08/14/2015 16:40	WG809022
Lead	8.10		0.584	1	08/14/2015 16:40	WG809022
Selenium	ND		2.34	1	08/14/2015 16:40	WG809022
Silver	ND		1.17	1	08/14/2015 16:40	WG809022

Volatile Organic Compounds (GC/MS) by Method 8260B

Analyte	Result (dry) mg/kg	Qualifier	RDL (dry) mg/kg	Dilution	Analysis date / time	Batch
Acetone	ND		0.292	5	08/14/2015 19:49	WG809088
Acrylonitrile	ND		0.0584	5	08/14/2015 19:49	WG809088
Benzene	ND		0.00584	5	08/14/2015 19:49	WG809088
Bromobenzene	ND		0.00584	5	08/14/2015 19:49	WG809088
Bromodichloromethane	ND		0.00584	5	08/14/2015 19:49	WG809088
Bromoform	ND		0.00584	5	08/14/2015 19:49	WG809088
Bromomethane	ND		0.0292	5	08/14/2015 19:49	WG809088
n-Butylbenzene	ND		0.00584	5	08/14/2015 19:49	WG809088
sec-Butylbenzene	ND		0.00584	5	08/14/2015 19:49	WG809088
tert-Butylbenzene	ND		0.00584	5	08/14/2015 19:49	WG809088
Carbon tetrachloride	ND		0.00584	5	08/14/2015 19:49	WG809088
Chlorobenzene	ND		0.00584	5	08/14/2015 19:49	WG809088
Chlorodibromomethane	ND		0.00584	5	08/14/2015 19:49	WG809088
Chloroethane	ND		0.0292	5	08/14/2015 19:49	WG809088
2-Chloroethyl vinyl ether	ND		0.292	5	08/14/2015 19:49	WG809088
Chloroform	ND		0.0292	5	08/14/2015 19:49	WG809088
Chloromethane	ND		0.0146	5	08/14/2015 19:49	WG809088
2-Chlorotoluene	ND		0.00584	5	08/14/2015 19:49	WG809088
4-Chlorotoluene	ND		0.00584	5	08/14/2015 19:49	WG809088
1,2-Dibromo-3-Chloropropane	ND		0.0292	5	08/14/2015 19:49	WG809088
1,2-Dibromoethane	ND		0.00584	5	08/14/2015 19:49	WG809088
Dibromomethane	ND		0.00584	5	08/14/2015 19:49	WG809088
1,2-Dichlorobenzene	ND		0.00584	5	08/14/2015 19:49	WG809088
1,3-Dichlorobenzene	ND		0.00584	5	08/14/2015 19:49	WG809088
1,4-Dichlorobenzene	ND		0.00584	5	08/14/2015 19:49	WG809088
Dichlorodifluoromethane	ND		0.0292	5	08/14/2015 19:49	WG809088
1,1-Dichloroethane	ND		0.00584	5	08/14/2015 19:49	WG809088
1,2-Dichloroethane	ND		0.00584	5	08/14/2015 19:49	WG809088
1,1-Dichloroethene	ND		0.00584	5	08/14/2015 19:49	WG809088
cis-1,2-Dichloroethene	ND		0.00584	5	08/14/2015 19:49	WG809088
trans-1,2-Dichloroethene	ND		0.00584	5	08/14/2015 19:49	WG809088
1,2-Dichloropropane	ND		0.00584	5	08/14/2015 19:49	WG809088
1,1-Dichloropropene	ND		0.00584	5	08/14/2015 19:49	WG809088

Volatile Organic Compounds (GC/MS) by Method 8260B

Analyte	Result (dry) mg/kg	Qualifier	RDL (dry) mg/kg	Dilution	Analysis date / time	Batch
1,3-Dichloropropane	ND		0.00584	5	08/14/2015 19:49	WG809088
cis-1,3-Dichloropropene	ND		0.00584	5	08/14/2015 19:49	WG809088
trans-1,3-Dichloropropene	ND		0.00584	5	08/14/2015 19:49	WG809088
2,2-Dichloropropane	ND		0.00584	5	08/14/2015 19:49	WG809088
Dicyclopentadiene	ND		0.00584	5	08/14/2015 19:49	WG809088
Di-isopropyl ether	ND	J4	0.00584	5	08/14/2015 19:49	WG809088
Ethylbenzene	ND		0.00584	5	08/14/2015 19:49	WG809088
Hexachloro-1,3-butadiene	ND		0.00584	5	08/14/2015 19:49	WG809088
Isopropylbenzene	ND		0.00584	5	08/14/2015 19:49	WG809088
p-Isopropyltoluene	ND		0.00584	5	08/14/2015 19:49	WG809088
2-Butanone (MEK)	ND		0.0584	5	08/14/2015 19:49	WG809088
Methylene Chloride	ND		0.0292	5	08/14/2015 19:49	WG809088
4-Methyl-2-pentanone (MIBK)	ND		0.0584	5	08/14/2015 19:49	WG809088
Methyl tert-butyl ether	ND		0.00584	5	08/14/2015 19:49	WG809088
Naphthalene	ND		0.0292	5	08/17/2015 14:07	WG809095
n-Propylbenzene	ND		0.00584	5	08/14/2015 19:49	WG809088
Styrene	ND		0.00584	5	08/14/2015 19:49	WG809088
1,1,1,2-Tetrachloroethane	ND		0.00584	5	08/14/2015 19:49	WG809088
1,1,2,2-Tetrachloroethane	ND		0.00584	5	08/14/2015 19:49	WG809088
1,1,2-Trichlorotrifluoroethane	ND		0.00584	5	08/14/2015 19:49	WG809088
Tetrachloroethene	ND		0.00584	5	08/14/2015 19:49	WG809088
Toluene	ND		0.0292	5	08/14/2015 19:49	WG809088
1,2,3-Trichlorobenzene	ND		0.00584	5	08/14/2015 19:49	WG809088
1,2,4-Trichlorobenzene	ND		0.00584	5	08/14/2015 19:49	WG809088
1,1,1-Trichloroethane	ND		0.00584	5	08/14/2015 19:49	WG809088
1,1,2-Trichloroethane	ND		0.00584	5	08/14/2015 19:49	WG809088
Trichloroethene	ND		0.00584	5	08/14/2015 19:49	WG809088
Trichlorofluoromethane	ND		0.0292	5	08/14/2015 19:49	WG809088
1,2,3-Trichloropropane	ND		0.0146	5	08/14/2015 19:49	WG809088
1,2,4-Trimethylbenzene	ND		0.00584	5	08/14/2015 19:49	WG809088
1,2,3-Trimethylbenzene	ND		0.00584	5	08/14/2015 19:49	WG809088
1,3,5-Trimethylbenzene	ND		0.00584	5	08/14/2015 19:49	WG809088
Vinyl chloride	ND		0.00584	5	08/14/2015 19:49	WG809088
Xylenes, Total	ND		0.0175	5	08/14/2015 19:49	WG809088
(S) Toluene-d8	*98.7*		*88.7-115*		*08/14/2015 19:49*	WG809088
(S) Dibromofluoromethane	*100*		*76.3-123*		*08/14/2015 19:49*	WG809088
(S) 4-Bromofluorobenzene	*90.2*		*69.7-129*		*08/14/2015 19:49*	WG809088

Semi Volatile Organic Compounds (GC/MS) by Method 8270C

Analyte	Result (dry) mg/kg	Qualifier	RDL (dry) mg/kg	Dilution	Analysis date / time	Batch
Acenaphthene	ND		0.385	10	08/17/2015 15:09	WG809054
Acenaphthylene	ND		0.385	10	08/17/2015 15:09	WG809054
Anthracene	ND		0.385	10	08/17/2015 15:09	WG809054
Benzidine	ND		3.89	10	08/17/2015 15:09	WG809054
Benzo(a)anthracene	ND		0.385	10	08/17/2015 15:09	WG809054
Benzo(b)fluoranthene	ND		0.771	20	08/17/2015 16:53	WG809054
Benzo(k)fluoranthene	ND		0.771	20	08/17/2015 16:53	WG809054
Benzo(g,h,i)perylene	ND		0.771	20	08/17/2015 16:53	WG809054
Benzo(a)pyrene	ND		0.771	20	08/17/2015 16:53	WG809054
Bis(2-chlorethoxy)methane	ND		3.89	10	08/17/2015 15:09	WG809054
Bis(2-chloroethyl)ether	ND		3.89	10	08/17/2015 15:09	WG809054
Bis(2-chloroisopropyl)ether	ND		3.89	10	08/17/2015 15:09	WG809054
4-Bromophenyl-phenylether	ND		3.89	10	08/17/2015 15:09	WG809054
2-Chloronaphthalene	ND		0.385	10	08/17/2015 15:09	WG809054
4-Chlorophenyl-phenylether	ND		3.89	10	08/17/2015 15:09	WG809054

Semi Volatile Organic Compounds (GC/MS) by Method 8270C

Analyte	Result (dry) mg/kg	Qualifier	RDL (dry) mg/kg	Dilution	Analysis date / time	Batch
Chrysene	ND		0.385	10	08/17/2015 15:09	WG809054
Dibenz(a,h)anthracene	ND		0.771	20	08/17/2015 16:53	WG809054
3,3-Dichlorobenzidine	ND		3.89	10	08/17/2015 15:09	WG809054
2,4-Dinitrotoluene	ND		3.89	10	08/17/2015 15:09	WG809054
2,6-Dinitrotoluene	ND		3.89	10	08/17/2015 15:09	WG809054
Fluoranthene	ND		0.385	10	08/17/2015 15:09	WG809054
Fluorene	ND		0.385	10	08/17/2015 15:09	WG809054
Hexachlorobenzene	ND		3.89	10	08/17/2015 15:09	WG809054
Hexachloro-1,3-butadiene	ND		3.89	10	08/17/2015 15:09	WG809054
Hexachlorocyclopentadiene	ND		3.89	10	08/17/2015 15:09	WG809054
Hexachloroethane	ND		3.89	10	08/17/2015 15:09	WG809054
Indeno(1,2,3-cd)pyrene	ND		0.771	20	08/17/2015 16:53	WG809054
Isophorone	ND		3.89	10	08/17/2015 15:09	WG809054
Naphthalene	0.580		0.385	10	08/17/2015 15:09	WG809054
Nitrobenzene	ND		3.89	10	08/17/2015 15:09	WG809054
n-Nitrosodimethylamine	ND		3.89	10	08/17/2015 15:09	WG809054
n-Nitrosodiphenylamine	ND		3.89	10	08/17/2015 15:09	WG809054
n-Nitrosodi-n-propylamine	ND		3.89	10	08/17/2015 15:09	WG809054
Phenanthrene	ND		0.385	10	08/17/2015 15:09	WG809054
Benzylbutyl phthalate	ND		3.89	10	08/17/2015 15:09	WG809054
Bis(2-ethylhexyl)phthalate	ND		3.89	10	08/17/2015 15:09	WG809054
Di-n-butyl phthalate	ND		3.89	10	08/17/2015 15:09	WG809054
Diethyl phthalate	ND		3.89	10	08/17/2015 15:09	WG809054
Dimethyl phthalate	ND		3.89	10	08/17/2015 15:09	WG809054
Di-n-octyl phthalate	ND		3.89	10	08/17/2015 15:09	WG809054
Pyrene	ND		0.385	10	08/17/2015 15:09	WG809054
1,2,4-Trichlorobenzene	ND		3.89	10	08/17/2015 15:09	WG809054
4-Chloro-3-methylphenol	ND		3.89	10	08/17/2015 15:09	WG809054
2-Chlorophenol	ND		3.89	10	08/17/2015 15:09	WG809054
2,4-Dichlorophenol	ND		3.89	10	08/17/2015 15:09	WG809054
2,4-Dimethylphenol	ND		3.89	10	08/17/2015 15:09	WG809054
4,6-Dinitro-2-methylphenol	ND		3.89	10	08/17/2015 15:09	WG809054
2,4-Dinitrophenol	ND		3.89	10	08/17/2015 15:09	WG809054
2-Nitrophenol	ND		3.89	10	08/17/2015 15:09	WG809054
4-Nitrophenol	ND		3.89	10	08/17/2015 15:09	WG809054
Pentachlorophenol	ND		3.89	10	08/17/2015 15:09	WG809054
Phenol	ND		3.89	10	08/17/2015 15:09	WG809054
2,4,6-Trichlorophenol	ND		3.89	10	08/17/2015 15:09	WG809054
(S) 2-Fluorophenol	*72.6*		*21.1-116*		*08/17/2015 15:09*	WG809054
(S) Phenol-d5	*78.9*		*26.3-121*		*08/17/2015 15:09*	WG809054
(S) Nitrobenzene-d5	*77.5*		*21.9-129*		*08/17/2015 15:09*	WG809054
(S) 2-Fluorobiphenyl	*75.8*		*34.9-129*		*08/17/2015 15:09*	WG809054
(S) 2,4,6-Tribromophenol	*97.4*		*21.6-142*		*08/17/2015 15:09*	WG809054
(S) p-Terphenyl-d14	*109*		*21.5-128*		*08/17/2015 15:09*	WG809054

Total Solids by Method 2540 G-2011

Analyte	Result %	Qualifier	Dilution	Analysis date / time	Batch
Total Solids	89.1		1	08/15/2015 09:29	WG809041

Volatile Organic Compounds (GC/MS) by Method 8260B

Analyte	Result (dry) mg/kg	Qualifier	RDL (dry) mg/kg	Dilution	Analysis date / time	Batch
Acetone	ND		28.0	500	08/14/2015 20:12	WG809088
Acrylonitrile	ND		5.61	500	08/14/2015 20:12	WG809088
Benzene	ND		0.561	500	08/14/2015 20:12	WG809088
Bromobenzene	ND		0.561	500	08/14/2015 20:12	WG809088
Bromodichloromethane	ND		0.561	500	08/14/2015 20:12	WG809088
Bromoform	ND		0.561	500	08/14/2015 20:12	WG809088
Bromomethane	ND		2.80	500	08/14/2015 20:12	WG809088
n-Butylbenzene	7.12		0.561	500	08/14/2015 20:12	WG809088
sec-Butylbenzene	1.30		0.561	500	08/14/2015 20:12	WG809088
tert-Butylbenzene	ND		0.561	500	08/14/2015 20:12	WG809088
Carbon tetrachloride	ND		0.561	500	08/14/2015 20:12	WG809088
Chlorobenzene	ND		0.561	500	08/14/2015 20:12	WG809088
Chlorodibromomethane	ND		0.561	500	08/14/2015 20:12	WG809088
Chloroethane	ND		2.80	500	08/14/2015 20:12	WG809088
2-Chloroethyl vinyl ether	ND		28.0	500	08/14/2015 20:12	WG809088
Chloroform	ND		2.80	500	08/14/2015 20:12	WG809088
Chloromethane	ND		1.40	500	08/14/2015 20:12	WG809088
2-Chlorotoluene	ND		0.561	500	08/14/2015 20:12	WG809088
4-Chlorotoluene	ND		0.561	500	08/14/2015 20:12	WG809088
1,2-Dibromo-3-Chloropropane	ND		2.80	500	08/14/2015 20:12	WG809088
1,2-Dibromoethane	ND		0.561	500	08/14/2015 20:12	WG809088
Dibromomethane	ND		0.561	500	08/14/2015 20:12	WG809088
1,2-Dichlorobenzene	ND		0.561	500	08/14/2015 20:12	WG809088
1,3-Dichlorobenzene	ND		0.561	500	08/14/2015 20:12	WG809088
1,4-Dichlorobenzene	ND		0.561	500	08/14/2015 20:12	WG809088
Dichlorodifluoromethane	ND		2.80	500	08/14/2015 20:12	WG809088
1,1-Dichloroethane	ND		0.561	500	08/14/2015 20:12	WG809088
1,2-Dichloroethane	ND		0.561	500	08/14/2015 20:12	WG809088
1,1-Dichloroethene	ND		0.561	500	08/14/2015 20:12	WG809088
cis-1,2-Dichloroethene	ND		0.561	500	08/14/2015 20:12	WG809088
trans-1,2-Dichloroethene	ND		0.561	500	08/14/2015 20:12	WG809088
1,2-Dichloropropane	ND		0.561	500	08/14/2015 20:12	WG809088
1,1-Dichloropropene	ND		0.561	500	08/14/2015 20:12	WG809088
1,3-Dichloropropane	ND		0.561	500	08/14/2015 20:12	WG809088
cis-1,3-Dichloropropene	ND		0.561	500	08/14/2015 20:12	WG809088
trans-1,3-Dichloropropene	ND		0.561	500	08/14/2015 20:12	WG809088
2,2-Dichloropropane	ND		0.561	500	08/14/2015 20:12	WG809088
Dicyclopentadiene	10.2		0.561	500	08/14/2015 20:12	WG809088
Di-isopropyl ether	ND	J4	0.561	500	08/14/2015 20:12	WG809088
Ethylbenzene	12.4		0.561	500	08/14/2015 20:12	WG809088
Hexachloro-1,3-butadiene	ND		0.561	500	08/14/2015 20:12	WG809088
Isopropylbenzene	2.89		0.561	500	08/14/2015 20:12	WG809088
p-Isopropyltoluene	ND		0.561	500	08/14/2015 20:12	WG809088
2-Butanone (MEK)	ND		5.61	500	08/14/2015 20:12	WG809088
Methylene Chloride	ND		2.80	500	08/14/2015 20:12	WG809088
4-Methyl-2-pentanone (MIBK)	ND		5.61	500	08/14/2015 20:12	WG809088
Methyl tert-butyl ether	ND		0.561	500	08/14/2015 20:12	WG809088
Naphthalene	89.7		2.80	500	08/14/2015 20:12	WG809088
n-Propylbenzene	25.3		0.561	500	08/14/2015 20:12	WG809088
Styrene	3.78		0.561	500	08/14/2015 20:12	WG809088

Volatile Organic Compounds (GC/MS) by Method 8260B

Analyte	Result (dry) mg/kg	Qualifier	RDL (dry) mg/kg	Dilution	Analysis date / time	Batch
1,1,1,2-Tetrachloroethane	ND		0.561	500	08/14/2015 20:12	WG809088
1,1,2,2-Tetrachloroethane	ND		0.561	500	08/14/2015 20:12	WG809088
1,1,2-Trichlorotrifluoroethane	ND		0.561	500	08/14/2015 20:12	WG809088
Tetrachloroethene	ND		0.561	500	08/14/2015 20:12	WG809088
Toluene	ND		2.80	500	08/14/2015 20:12	WG809088
1,2,3-Trichlorobenzene	ND		0.561	500	08/14/2015 20:12	WG809088
1,2,4-Trichlorobenzene	ND		0.561	500	08/14/2015 20:12	WG809088
1,1,1-Trichloroethane	ND		0.561	500	08/14/2015 20:12	WG809088
1,1,2-Trichloroethane	ND		0.561	500	08/14/2015 20:12	WG809088
Trichloroethene	ND		0.561	500	08/14/2015 20:12	WG809088
Trichlorofluoromethane	ND		2.80	500	08/14/2015 20:12	WG809088
1,2,3-Trichloropropane	ND		1.40	500	08/14/2015 20:12	WG809088
1,2,4-Trimethylbenzene	662		11.2	10000	08/17/2015 13:05	WG809612
1,2,3-Trimethylbenzene	73.4		0.561	500	08/14/2015 20:12	WG809088
1,3,5-Trimethylbenzene	39.5		0.561	500	08/14/2015 20:12	WG809088
Vinyl chloride	ND		0.561	500	08/14/2015 20:12	WG809088
Xylenes, Total	95.4		1.68	500	08/14/2015 20:12	WG809088
(S) Toluene-d8	*101*		*88.7-115*		*08/14/2015 20:12*	WG809088
(S) Dibromofluoromethane	*96.9*		*76.3-123*		*08/14/2015 20:12*	WG809088
(S) 4-Bromofluorobenzene	*98.8*		*69.7-129*		*08/14/2015 20:12*	WG809088

Semi Volatile Organic Compounds (GC/MS) by Method 8270C

Analyte	Result (dry) mg/kg	Qualifier	RDL (dry) mg/kg	Dilution	Analysis date / time	Batch
Acenaphthene	ND		0.0370	1	08/17/2015 13:43	WG809054
Acenaphthylene	ND		0.0370	1	08/17/2015 13:43	WG809054
Anthracene	ND		0.0370	1	08/17/2015 13:43	WG809054
Benzidine	ND		0.374	1	08/17/2015 13:43	WG809054
Benzo(a)anthracene	ND		0.0370	1	08/17/2015 13:43	WG809054
Benzo(b)fluoranthene	ND		0.740	20	08/17/2015 15:39	WG809054
Benzo(k)fluoranthene	ND		0.740	20	08/17/2015 15:39	WG809054
Benzo(g,h,i)perylene	ND		0.740	20	08/17/2015 15:39	WG809054
Benzo(a)pyrene	ND		0.740	20	08/17/2015 15:39	WG809054
Bis(2-chlorethoxy)methane	ND		7.47	20	08/17/2015 15:39	WG809054
Bis(2-chloroethyl)ether	ND		7.47	20	08/17/2015 15:39	WG809054
Bis(2-chloroisopropyl)ether	ND		7.47	20	08/17/2015 15:39	WG809054
4-Bromophenyl-phenylether	ND		0.374	1	08/17/2015 13:43	WG809054
2-Chloronaphthalene	ND		0.0370	1	08/17/2015 13:43	WG809054
4-Chlorophenyl-phenylether	ND		0.374	1	08/17/2015 13:43	WG809054
Chrysene	ND		0.0370	1	08/17/2015 13:43	WG809054
Dibenz(a,h)anthracene	ND		0.740	20	08/17/2015 15:39	WG809054
3,3-Dichlorobenzidine	ND		0.374	1	08/17/2015 13:43	WG809054
2,4-Dinitrotoluene	ND		0.374	1	08/17/2015 13:43	WG809054
2,6-Dinitrotoluene	ND		0.374	1	08/17/2015 13:43	WG809054
Fluoranthene	ND		0.0370	1	08/17/2015 13:43	WG809054
Fluorene	ND		0.0370	1	08/17/2015 13:43	WG809054
Hexachlorobenzene	ND		0.374	1	08/17/2015 13:43	WG809054
Hexachloro-1,3-butadiene	ND		7.47	20	08/17/2015 15:39	WG809054
Hexachlorocyclopentadiene	ND		0.374	1	08/17/2015 13:43	WG809054
Hexachloroethane	ND		7.47	20	08/17/2015 15:39	WG809054
Indeno(1,2,3-cd)pyrene	ND		0.740	20	08/17/2015 15:39	WG809054
Isophorone	ND		7.47	20	08/17/2015 15:39	WG809054
Naphthalene	114		3.70	100	08/17/2015 17:18	WG809054
Nitrobenzene	ND		7.47	20	08/17/2015 15:39	WG809054
n-Nitrosodimethylamine	ND		7.47	20	08/17/2015 15:39	WG809054
n-Nitrosodiphenylamine	ND		0.374	1	08/17/2015 13:43	WG809054

Semi Volatile Organic Compounds (GC/MS) by Method 8270C

Analyte	Result (dry) mg/kg	Qualifier	RDL (dry) mg/kg	Dilution	Analysis date / time	Batch
n-Nitrosodi-n-propylamine	ND		7.47	20	08/17/2015 15:39	WG809054
Phenanthrene	ND		0.0370	1	08/17/2015 13:43	WG809054
Benzylbutyl phthalate	ND		0.374	1	08/17/2015 13:43	WG809054
Bis(2-ethylhexyl)phthalate	ND		0.374	1	08/17/2015 13:43	WG809054
Di-n-butyl phthalate	ND		0.374	1	08/17/2015 13:43	WG809054
Diethyl phthalate	ND		0.374	1	08/17/2015 13:43	WG809054
Dimethyl phthalate	ND		0.374	1	08/17/2015 13:43	WG809054
Di-n-octyl phthalate	ND		0.374	1	08/17/2015 13:43	WG809054
Pyrene	ND		0.0370	1	08/17/2015 13:43	WG809054
1,2,4-Trichlorobenzene	ND		7.47	20	08/17/2015 15:39	WG809054
4-Chloro-3-methylphenol	ND		7.47	20	08/17/2015 15:39	WG809054
2-Chlorophenol	ND	J3	7.47	20	08/17/2015 15:39	WG809054
2,4-Dichlorophenol	ND		7.47	20	08/17/2015 15:39	WG809054
2,4-Dimethylphenol	ND		7.47	20	08/17/2015 15:39	WG809054
4,6-Dinitro-2-methylphenol	ND		0.374	1	08/17/2015 13:43	WG809054
2,4-Dinitrophenol	ND		0.374	1	08/17/2015 13:43	WG809054
2-Nitrophenol	ND		7.47	20	08/17/2015 15:39	WG809054
4-Nitrophenol	ND		0.374	1	08/17/2015 13:43	WG809054
Pentachlorophenol	ND		0.374	1	08/17/2015 13:43	WG809054
Phenol	ND		7.47	20	08/17/2015 15:39	WG809054
2,4,6-Trichlorophenol	ND		0.374	1	08/17/2015 13:43	WG809054
(S) 2-Fluorophenol	*73.5*	J7	*21.1-116*		*08/17/2015 15:39*	WG809054
(S) Phenol-d5	*82.8*	J7	*26.3-121*		*08/17/2015 15:39*	WG809054
(S) Nitrobenzene-d5	*117*	J7	*21.9-129*		*08/17/2015 15:39*	WG809054
(S) 2-Fluorobiphenyl	*61.6*		*34.9-129*		*08/17/2015 13:43*	WG809054
(S) 2,4,6-Tribromophenol	*88.6*		*21.6-142*		*08/17/2015 13:43*	WG809054
(S) p-Terphenyl-d14	*110*		*21.5-128*		*08/17/2015 13:43*	WG809054

Sample Narrative:

8270C L782656-16 WG809054: Dilution due to matrix

1 Cp
2 Tc
3 Ss
4 Cn
5 Sr
6 Qc
7 Gl
8 Al
9 Sc

Method Blank (MB)

(MB) 08/15/15 08:43

Analyte	MB Result	MB Qualifier	MB RDL
	%		%
Total Solids	0.000700		

L782656-06 Original Sample (OS) • Duplicate (DUP)

(OS) 08/15/15 08:44 • (DUP) 08/15/15 08:45

Analyte	Original Result	DUP Result	Dilution	DUP RPD	DUP Qualifier	DUP RPD Limits
	%	%		%		%
Total Solids	89.1	89.1	1	0.0619		5

Laboratory Control Sample (LCS)

(LCS) 08/15/15 08:43

Analyte	Spike Amount	LCS Result	LCS Rec.	Rec. Limits	LCS Qualifier
	%	%	%	%	
Total Solids	50.0	50.0	100	85.0-115	

Method Blank (MB)

(MB) 08/15/15 09:25

Analyte	MB Result %	MB Qualifier	MB RDL %
Total Solids	0.000200		

L782786-02 Original Sample (OS) • Duplicate (DUP)

(OS) 08/15/15 09:29 • (DUP) 08/15/15 09:29

Analyte	Original Result %	DUP Result %	Dilution	DUP RPD %	DUP Qualifier	DUP RPD Limits %
Total Solids	86.5	86.6	1	0.0682		5

Laboratory Control Sample (LCS)

(LCS) 08/15/15 09:25

Analyte	Spike Amount %	LCS Result %	LCS Rec. %	Rec. Limits %	LCS Qualifier
Total Solids	50.0	50.0	100	85.0-115	

Method Blank (MB)

(MB) 08/15/15 09:30

Analyte	MB Result mg/kg	MB Qualifier	MB RDL mg/kg
Mercury	ND		0.0200

Laboratory Control Sample (LCS) • Laboratory Control Sample Duplicate (LCSD)

(LCS) 08/15/15 09:33 • (LCSD) 08/15/15 09:35

Analyte	Spike Amount mg/kg	LCS Result mg/kg	LCSD Result mg/kg	LCS Rec. %	LCSD Rec. %	Rec. Limits %	LCS Qualifier	LCSD Qualifier	RPD %	RPD Limits %
Mercury	0.300	0.275	0.272	92	91	80-120			1	20

L782483-06 Original Sample (OS) • Matrix Spike (MS) • Matrix Spike Duplicate (MSD)

(OS) 08/15/15 09:38 • (MS) 08/15/15 09:41 • (MSD) 08/15/15 09:43

Analyte	Spike Amount mg/kg	Original Result mg/kg	MS Result mg/kg	MSD Result mg/kg	MS Rec. %	MSD Rec. %	Dilution	Rec. Limits %	MS Qualifier	MSD Qualifier	RPD %	RPD Limits %
Mercury	0.300	0.0218	0.286	0.270	88	83	1	75-125			6	20

Method Blank (MB)

(MB) 08/14/15 15:12

Analyte	MB Result mg/kg	MB Qualifier	MB RDL mg/kg
Arsenic	ND		2.00
Barium	ND		0.500
Cadmium	ND		0.500
Chromium	ND		1.00
Lead	ND		0.500
Selenium	ND		2.00
Silver	ND		1.00

Laboratory Control Sample (LCS) • Laboratory Control Sample Duplicate (LCSD)

(LCS) 08/14/15 15:15 • (LCSD) 08/14/15 15:18

Analyte	Spike Amount mg/kg	LCS Result mg/kg	LCSD Result mg/kg	LCS Rec. %	LCSD Rec. %	Rec. Limits %	LCS Qualifier	LCSD Qualifier	RPD %	RPD Limits %
Arsenic	100	98.0	94.4	98	94	80-120			4	20
Barium	100	101	97.2	101	97	80-120			4	20
Cadmium	100	99.0	95.1	99	95	80-120			4	20
Chromium	100	100	96.0	100	96	80-120			4	20
Lead	100	102	97.4	102	97	80-120			4	20
Selenium	100	102	98.2	102	98	80-120			4	20
Silver	100	98.7	94.6	99	95	80-120			4	20

L782564-06 Original Sample (OS) • Matrix Spike (MS) • Matrix Spike Duplicate (MSD)

(OS) 08/14/15 15:21 • (MS) 08/14/15 15:29 • (MSD) 08/14/15 15:31

Analyte	Spike Amount mg/kg	Original Result mg/kg	MS Result mg/kg	MSD Result mg/kg	MS Rec. %	MSD Rec. %	Dilution	Rec. Limits %	MS Qualifier	MSD Qualifier	RPD %	RPD Limits %
Arsenic	100	3.98	95.3	93.5	91	90	1	75-125			2	20
Barium	100	127	261	307	134	180	1	75-125	J5	J5	16	20
Cadmium	100	0.0420	93.3	91.6	93	92	1	75-125			2	20
Chromium	100	17.4	128	139	111	121	1	75-125			8	20
Lead	100	12.8	109	109	96	97	1	75-125			0	20
Selenium	100	ND	94.2	92.8	94	93	1	75-125			2	20
Silver	100	ND	94.6	93.6	95	94	1	75-125			1	20

Method Blank (MB)

(MB) 08/16/15 03:55

Analyte	MB Result mg/kg	MB Qualifier	MB RDL mg/kg
Acetone	ND		0.0500
Acrylonitrile	ND		0.0100
Benzene	ND		0.00100
Bromobenzene	ND		0.00100
Bromodichloromethane	ND		0.00100
Bromoform	ND		0.00100
Bromomethane	ND		0.00500
n-Butylbenzene	ND		0.00100
sec-Butylbenzene	ND		0.00100
tert-Butylbenzene	ND		0.00100
Carbon tetrachloride	ND		0.00100
Chlorobenzene	ND		0.00100
Chlorodibromomethane	ND		0.00100
Chloroethane	ND		0.00500
2-Chloroethyl vinyl ether	ND		0.0500
Chloroform	ND		0.00500
Chloromethane	ND		0.00250
2-Chlorotoluene	ND		0.00100
4-Chlorotoluene	ND		0.00100
1,2-Dibromo-3-Chloropropane	ND		0.00500
1,2-Dibromoethane	ND		0.00100
Dibromomethane	ND		0.00100
1,2-Dichlorobenzene	ND		0.00100
1,3-Dichlorobenzene	ND		0.00100
1,4-Dichlorobenzene	ND		0.00100
Dichlorodifluoromethane	ND		0.00500
1,1-Dichloroethane	ND		0.00100
1,2-Dichloroethane	ND		0.00100
1,1-Dichloroethene	ND		0.00100
cis-1,2-Dichloroethene	ND		0.00100
trans-1,2-Dichloroethene	ND		0.00100
1,2-Dichloropropane	ND		0.00100
1,1-Dichloropropene	ND		0.00100
1,3-Dichloropropane	ND		0.00100
cis-1,3-Dichloropropene	ND		0.00100
trans-1,3-Dichloropropene	ND		0.00100

Method Blank (MB)

(MB) 08/16/15 03:55

Analyte	MB Result mg/kg	MB Qualifier	MB RDL mg/kg
2,2-Dichloropropane	ND		0.00100
Dicyclopentadiene	ND		0.00100
Di-isopropyl ether	ND		0.00100
Ethylbenzene	ND		0.00100
Hexachloro-1,3-butadiene	ND		0.00100
Isopropylbenzene	ND		0.00100
p-Isopropyltoluene	ND		0.00100
2-Butanone (MEK)	ND		0.0100
Methylene Chloride	ND		0.00500
4-Methyl-2-pentanone (MIBK)	ND		0.0100
Methyl tert-butyl ether	ND		0.00100
Naphthalene	ND		0.00500
n-Propylbenzene	ND		0.00100
Styrene	ND		0.00100
1,1,1,2-Tetrachloroethane	ND		0.00100
1,1,2,2-Tetrachloroethane	ND		0.00100
Tetrachloroethene	ND		0.00100
Toluene	ND		0.00500
1,1,2-Trichlorotrifluoroethane	ND		0.00100
1,2,3-Trichlorobenzene	ND		0.00100
1,2,4-Trichlorobenzene	ND		0.00100
1,1,1-Trichloroethane	ND		0.00100
1,1,2-Trichloroethane	ND		0.00100
Trichloroethene	ND		0.00100
Trichlorofluoromethane	ND		0.00500
1,2,3-Trichloropropane	ND		0.00250
1,2,3-Trimethylbenzene	ND		0.00100
1,2,4-Trimethylbenzene	ND		0.00100
1,3,5-Trimethylbenzene	ND		0.00100
Vinyl chloride	ND		0.00100
Xylenes, Total	ND		0.00300
(S) Toluene-d8	*99.2*		*88.7-115*
(S) Dibromofluoromethane	*96.1*		*76.3-123*
(S) 4-Bromofluorobenzene	*97.3*		*69.7-129*

Laboratory Control Sample (LCS) • Laboratory Control Sample Duplicate (LCSD)

(LCS) 08/16/15 01:13 • (LCSD) 08/16/15 01:33

Analyte	Spike Amount mg/kg	LCS Result mg/kg	LCSD Result mg/kg	LCS Rec. %	LCSD Rec. %	Rec. Limits %	LCS Qualifier	LCSD Qualifier	RPD %	RPD Limits %
Acetone	0.125	0.120	0.124	96.0	99.3	25.3-178			3.39	22.9
Acrylonitrile	0.125	0.122	0.129	97.3	103	57.8-143			5.89	20
Benzene	0.0250	0.0243	0.0235	97.0	94.2	72.6-120			2.98	20
Bromobenzene	0.0250	0.0252	0.0246	101	98.3	80.3-115			2.42	20
Bromodichloromethane	0.0250	0.0242	0.0234	96.6	93.8	75.3-119			2.96	20
Bromoform	0.0250	0.0253	0.0254	101	102	69.1-135			0.590	20
Bromomethane	0.0250	0.0196	0.0200	78.6	80.0	23.0-191			1.82	20
n-Butylbenzene	0.0250	0.0250	0.0237	100	94.9	74.2-134			5.17	20
sec-Butylbenzene	0.0250	0.0248	0.0239	99.2	95.6	77.8-129			3.74	20
tert-Butylbenzene	0.0250	0.0249	0.0239	99.8	95.5	77.2-129			4.33	20
Carbon tetrachloride	0.0250	0.0239	0.0229	95.6	91.5	69.4-129			4.35	20
Chlorobenzene	0.0250	0.0260	0.0251	104	100	78.9-122			3.72	20
Chlorodibromomethane	0.0250	0.0267	0.0260	107	104	76.4-126			2.57	20
Chloroethane	0.0250	0.0243	0.0231	97.2	92.3	47.2-147			5.14	20
2-Chloroethyl vinyl ether	0.125	0.0997	0.105	79.8	83.8	16.7-162			4.87	23.7
Chloroform	0.0250	0.0242	0.0235	96.9	93.9	73.3-122			3.12	20
Chloromethane	0.0250	0.0196	0.0190	78.5	76.0	53.1-135			3.17	20
2-Chlorotoluene	0.0250	0.0255	0.0248	102	99.1	74.6-127			2.96	20
4-Chlorotoluene	0.0250	0.0247	0.0237	98.8	94.9	79.5-123			4.03	20
1,2-Dibromo-3-Chloropropane	0.0250	0.0254	0.0267	102	107	64.9-131			4.88	20
1,2-Dibromoethane	0.0250	0.0253	0.0257	101	103	78.7-123			1.39	20
Dibromomethane	0.0250	0.0250	0.0248	100	99.3	78.5-117			0.730	20
1,2-Dichlorobenzene	0.0250	0.0266	0.0259	106	104	83.6-119			2.75	20
1,3-Dichlorobenzene	0.0250	0.0262	0.0252	105	101	75.9-129			4.14	20
1,4-Dichlorobenzene	0.0250	0.0253	0.0245	101	97.8	81.0-115			3.52	20
Dichlorodifluoromethane	0.0250	0.0258	0.0243	103	97.3	50.9-139			6.03	20
1,1-Dichloroethane	0.0250	0.0248	0.0236	99.2	94.3	71.7-125			5.13	20
1,2-Dichloroethane	0.0250	0.0245	0.0249	98.2	99.4	67.2-121			1.27	20
1,1-Dichloroethene	0.0250	0.0261	0.0247	104	98.9	60.6-133			5.20	20
cis-1,2-Dichloroethene	0.0250	0.0250	0.0242	100	96.9	76.1-121			3.14	20
trans-1,2-Dichloroethene	0.0250	0.0257	0.0246	103	98.4	70.7-124			4.20	20
1,2-Dichloropropane	0.0250	0.0241	0.0231	96.2	92.5	76.9-123			3.97	20
1,1-Dichloropropene	0.0250	0.0248	0.0234	99.3	93.8	71.2-126			5.74	20
1,3-Dichloropropane	0.0250	0.0245	0.0248	97.8	99.2	80.3-114			1.41	20
cis-1,3-Dichloropropene	0.0250	0.0251	0.0250	101	99.9	77.3-123			0.600	20
trans-1,3-Dichloropropene	0.0250	0.0264	0.0258	106	103	73.0-127			2.44	20

Laboratory Control Sample (LCS) • Laboratory Control Sample Duplicate (LCSD)

(LCS) 08/16/15 01:13 • (LCSD) 08/16/15 01:33

Analyte	Spike Amount mg/kg	LCS Result mg/kg	LCSD Result mg/kg	LCS Rec. %	LCSD Rec. %	Rec. Limits %	LCS Qualifier	LCSD Qualifier	RPD %	RPD Limits %
2,2-Dichloropropane	0.0250	0.0241	0.0230	96.5	92.2	61.9-132			4.62	20
Dicyclopentadiene	0.0250	0.0248	0.0241	99.3	96.3	73.1-126			3.01	20
Di-isopropyl ether	0.0250	0.0246	0.0239	98.5	95.8	67.2-131			2.73	20
Ethylbenzene	0.0250	0.0257	0.0244	103	97.4	78.6-124			5.32	20
Hexachloro-1,3-butadiene	0.0250	0.0234	0.0226	93.4	90.3	69.2-136			3.45	20
Isopropylbenzene	0.0250	0.0242	0.0232	96.9	92.9	79.4-126			4.14	20
p-Isopropyltoluene	0.0250	0.0253	0.0242	101	96.7	75.4-132			4.45	20
2-Butanone (MEK)	0.125	0.112	0.118	89.8	94.8	44.5-154			5.41	21.3
Methylene Chloride	0.0250	0.0242	0.0240	96.7	95.9	68.2-119			0.860	20
4-Methyl-2-pentanone (MIBK)	0.125	0.110	0.115	88.0	92.2	61.1-138			4.60	20
Methyl tert-butyl ether	0.0250	0.0249	0.0253	99.8	101	70.2-122			1.46	20
Naphthalene	0.0250	0.0240	0.0250	95.9	99.9	69.9-132			4.09	20
n-Propylbenzene	0.0250	0.0253	0.0240	101	96.1	80.2-124			5.05	20
Styrene	0.0250	0.0265	0.0259	106	104	79.4-124			2.37	20
1,1,1,2-Tetrachloroethane	0.0250	0.0254	0.0245	102	98.1	76.7-127			3.65	20
1,1,2,2-Tetrachloroethane	0.0250	0.0261	0.0266	104	107	78.8-124			2.14	20
Tetrachloroethene	0.0250	0.0274	0.0255	110	102	71.1-133			7.21	20
Toluene	0.0250	0.0242	0.0233	96.9	93.1	76.7-116			3.99	20
1,1,2-Trichlorotrifluoroethane	0.0250	0.0268	0.0252	107	101	62.6-138			6.05	20
1,2,3-Trichlorobenzene	0.0250	0.0256	0.0258	102	103	72.5-137			0.720	20
1,2,4-Trichlorobenzene	0.0250	0.0264	0.0263	106	105	74.0-137			0.520	20
1,1,1-Trichloroethane	0.0250	0.0240	0.0232	95.9	92.6	69.9-127			3.52	20
1,1,2-Trichloroethane	0.0250	0.0269	0.0270	108	108	81.9-119			0.200	20
Trichloroethene	0.0250	0.0255	0.0244	102	97.6	77.2-122			4.31	20
Trichlorofluoromethane	0.0250	0.0235	0.0223	93.9	89.3	51.5-151			5.00	20
1,2,3-Trichloropropane	0.0250	0.0250	0.0255	99.9	102	74.0-124			2.08	20
1,2,3-Trimethylbenzene	0.0250	0.0242	0.0235	96.9	94.1	79.4-118			2.98	20
1,2,4-Trimethylbenzene	0.0250	0.0241	0.0233	96.4	93.2	77.1-124			3.36	20
1,3,5-Trimethylbenzene	0.0250	0.0247	0.0240	98.7	96.1	79.0-125			2.68	20
Vinyl chloride	0.0250	0.0251	0.0240	100	96.1	58.4-134			4.23	20
Xylenes, Total	0.0750	0.0762	0.0732	102	97.6	78.1-123			4.06	20
(S) Toluene-d8				*100*	*100*	*88.7-115*				
(S) Dibromofluoromethane				*97.2*	*98.4*	*76.3-123*				
(S) 4-Bromofluorobenzene				*98.7*	*99.1*	*69.7-129*				

L782656-03 Original Sample (OS) • Matrix Spike (MS) • Matrix Spike Duplicate (MSD)

(OS) 08/16/15 05:22 • (MS) 08/16/15 04:24 • (MSD) 08/16/15 04:44

Analyte	Spike Amount mg/kg	Original Result mg/kg	MS Result mg/kg	MSD Result mg/kg	MS Rec. %	MSD Rec. %	Dilution	Rec. Limits %	MS Qualifier	MSD Qualifier	RPD %	RPD Limits %
Acetone	0.125	0.00499	0.525	0.406	83.3	64.1	5	10.0-130			25.7	31.5
Acrylonitrile	0.125	ND	0.530	0.418	84.8	66.9	5	39.3-152			23.6	27.2
Benzene	0.0250	ND	0.108	0.0862	86.1	69.0	5	47.8-131			22.2	22.8
Bromobenzene	0.0250	ND	0.106	0.0844	85.0	67.5	5	40.0-130			22.9	27.4
Bromodichloromethane	0.0250	ND	0.106	0.0862	84.8	69.0	5	50.6-128			20.6	22.8
Bromoform	0.0250	ND	0.108	0.0856	86.3	68.5	5	43.3-139			23.0	25.9
Bromomethane	0.0250	ND	0.101	0.0750	80.5	60.0	5	5.00-189		J3	29.2	26.7
n-Butylbenzene	0.0250	0.000520	0.0916	0.0696	72.9	55.3	5	23.6-146			27.3	39.2
sec-Butylbenzene	0.0250	ND	0.0967	0.0745	77.4	59.6	5	31.0-142			26.0	34.7
tert-Butylbenzene	0.0250	ND	0.101	0.0793	81.2	63.5	5	36.9-142			24.5	31.7
Carbon tetrachloride	0.0250	ND	0.105	0.0853	84.3	68.2	5	46.0-140			21.1	27.2
Chlorobenzene	0.0250	ND	0.111	0.0894	88.9	71.5	5	44.1-134			21.6	25.7
Chlorodibromomethane	0.0250	ND	0.114	0.0907	90.9	72.6	5	49.7-134			22.5	24
Chloroethane	0.0250	ND	0.109	0.0882	87.0	70.5	5	5.00-164			21.0	28.4
2-Chloroethyl vinyl ether	0.125	ND	0.425	0.345	67.9	55.3	5	5.00-159			20.5	40
Chloroform	0.0250	ND	0.107	0.0871	86.0	69.7	5	51.2-133			21.0	22.8
Chloromethane	0.0250	ND	0.0897	0.0734	71.8	58.7	5	31.4-141			20.0	24.6
2-Chlorotoluene	0.0250	ND	0.108	0.0877	86.4	70.1	5	36.1-137			20.8	28.9
4-Chlorotoluene	0.0250	ND	0.102	0.0812	81.3	65.0	5	35.4-137			22.3	29.8
1,2-Dibromo-3-Chloropropane	0.0250	ND	0.101	0.0833	81.0	66.6	5	40.4-138			19.5	30.8
1,2-Dibromoethane	0.0250	ND	0.110	0.0876	87.8	70.1	5	50.2-133			22.5	23.6
Dibromomethane	0.0250	ND	0.109	0.0889	87.1	71.1	5	52.4-128			20.1	23
1,2-Dichlorobenzene	0.0250	ND	0.109	0.0883	86.9	70.7	5	34.6-139			20.6	29.9
1,3-Dichlorobenzene	0.0250	ND	0.105	0.0834	84.3	66.7	5	28.4-142			23.2	31.2
1,4-Dichlorobenzene	0.0250	ND	0.104	0.0842	83.4	67.3	5	35.0-133			21.4	31.1
Dichlorodifluoromethane	0.0250	ND	0.112	0.0887	89.8	71.0	5	31.2-144			23.4	30.2
1,1-Dichloroethane	0.0250	ND	0.111	0.0890	88.6	71.2	5	49.1-136			21.8	22.9
1,2-Dichloroethane	0.0250	ND	0.107	0.0869	85.5	69.5	5	47.1-129			20.6	22.7
1,1-Dichloroethene	0.0250	ND	0.116	0.0927	92.5	74.2	5	36.1-142			21.9	25.6
cis-1,2-Dichloroethene	0.0250	ND	0.113	0.0932	90.4	74.5	5	50.6-133			19.2	23
trans-1,2-Dichloroethene	0.0250	ND	0.113	0.0896	90.3	71.7	5	43.8-135			23.0	24.8
1,2-Dichloropropane	0.0250	ND	0.107	0.0882	85.5	70.5	5	50.3-134			19.2	22.7
1,1-Dichloropropene	0.0250	ND	0.108	0.0864	86.5	69.1	5	43.0-137			22.4	26.4
1,3-Dichloropropane	0.0250	ND	0.107	0.0852	85.6	68.1	5	51.4-127			22.7	23.1
cis-1,3-Dichloropropene	0.0250	ND	0.111	0.0907	88.9	72.6	5	48.4-134			20.2	23.6
trans-1,3-Dichloropropene	0.0250	ND	0.115	0.0885	91.8	70.8	5	46.6-135		J3	25.8	25.3

L782656-03 Original Sample (OS) • Matrix Spike (MS) • Matrix Spike Duplicate (MSD)

(OS) 08/16/15 05:22 • (MS) 08/16/15 04:24 • (MSD) 08/16/15 04:44

Analyte	Spike Amount mg/kg	Original Result mg/kg	MS Result mg/kg	MSD Result mg/kg	MS Rec. %	MSD Rec. %	Dilution	Rec. Limits %	MS Qualifier	MSD Qualifier	RPD %	RPD Limits %
2,2-Dichloropropane	0.0250	ND	0.108	0.0868	86.5	69.4	5	45.2-141			21.9	26.6
Dicyclopentadiene	0.0250	0.000405	0.104	0.0810	82.7	64.5	5	41.3-141			24.6	28.9
Di-isopropyl ether	0.0250	ND	0.108	0.0867	86.2	69.3	5	46.7-140			21.7	23.5
Ethylbenzene	0.0250	ND	0.110	0.0887	87.7	71.0	5	44.8-135			21.1	26.9
Hexachloro-1,3-butadiene	0.0250	ND	0.0689	0.0460	55.1	36.8	5	10.0-149			39.9	40
Isopropylbenzene	0.0250	ND	0.102	0.0813	81.9	65.1	5	41.9-139			22.9	29.3
p-Isopropyltoluene	0.0250	0.000366	0.0971	0.0751	77.4	59.8	5	27.3-146			25.5	35.1
2-Butanone (MEK)	0.125	ND	0.485	0.380	77.5	60.8	5	23.9-170			24.2	28.3
Methylene Chloride	0.0250	0.000799	0.104	0.0833	82.9	66.0	5	46.7-125		J3	22.5	22.2
4-Methyl-2-pentanone (MIBK)	0.125	ND	0.472	0.379	75.6	60.6	5	42.4-146			22.0	26.7
Methyl tert-butyl ether	0.0250	ND	0.110	0.0884	88.1	70.7	5	50.4-131			21.9	24.8
Naphthalene	0.0250	0.00207	0.0919	0.0761	71.9	59.2	5	18.4-145			18.9	34
n-Propylbenzene	0.0250	ND	0.103	0.0813	82.2	65.1	5	35.2-139			23.3	31.9
Styrene	0.0250	ND	0.115	0.0902	92.2	72.2	5	39.7-137			24.4	28.2
1,1,1,2-Tetrachloroethane	0.0250	ND	0.110	0.0882	88.3	70.6	5	48.8-136			22.3	25.5
1,1,2,2-Tetrachloroethane	0.0250	ND	0.109	0.0862	87.4	69.0	5	45.7-140			23.6	26.4
Tetrachloroethene	0.0250	ND	0.113	0.0906	90.1	72.5	5	37.7-140			21.7	29.2
Toluene	0.0250	ND	0.107	0.0873	85.9	69.8	5	47.8-127			20.7	24.3
1,1,2-Trichlorotrifluoroethane	0.0250	ND	0.116	0.0903	92.4	72.3	5	35.7-146			24.5	28.8
1,2,3-Trichlorobenzene	0.0250	ND	0.0906	0.0707	72.5	56.6	5	10.0-150			24.6	38.5
1,2,4-Trichlorobenzene	0.0250	ND	0.0932	0.0735	74.6	58.8	5	10.0-153			23.6	39.3
1,1,1-Trichloroethane	0.0250	ND	0.106	0.0861	84.5	68.9	5	49.0-138			20.3	25.3
1,1,2-Trichloroethane	0.0250	ND	0.117	0.0942	93.4	75.3	5	52.3-132			21.4	23.4
Trichloroethene	0.0250	ND	0.112	0.0914	89.6	73.1	5	48.0-132			20.3	24.8
Trichlorofluoromethane	0.0250	ND	0.102	0.0823	81.6	65.8	5	12.8-169			21.4	29.7
1,2,3-Trichloropropane	0.0250	ND	0.104	0.0833	83.5	66.6	5	44.4-138			22.6	26.3
1,2,3-Trimethylbenzene	0.0250	0.00119	0.102	0.0839	80.8	66.2	5	41.0-133			19.6	27.6
1,2,4-Trimethylbenzene	0.0250	0.000676	0.0986	0.0780	78.3	61.9	5	32.9-139			23.3	30.6
1,3,5-Trimethylbenzene	0.0250	0.000343	0.101	0.0802	80.4	63.9	5	37.1-138			22.8	30.6
Vinyl chloride	0.0250	ND	0.112	0.0915	89.8	73.2	5	32.0-146			20.3	26.3
Xylenes, Total	0.0750	ND	0.324	0.261	86.4	69.7	5	42.7-135			21.4	26.6
(S) Toluene-d8					*100*	*100*		*88.7-115*				
(S) Dibromofluoromethane					*97.0*	*95.8*		*76.3-123*				
(S) 4-Bromofluorobenzene					*98.1*	*95.2*		*69.7-129*				

Method Blank (MB)

(MB) 08/14/15 14:25

Analyte	MB Result mg/kg	MB Qualifier	MB RDL mg/kg
Acetone	ND		0.0500
Acrylonitrile	ND		0.0100
Benzene	ND		0.00100
Bromobenzene	ND		0.00100
Bromodichloromethane	ND		0.00100
Bromoform	ND		0.00100
Bromomethane	ND		0.00500
n-Butylbenzene	ND		0.00100
sec-Butylbenzene	ND		0.00100
tert-Butylbenzene	ND		0.00100
Carbon tetrachloride	ND		0.00100
Chlorobenzene	ND		0.00100
Chlorodibromomethane	ND		0.00100
Chloroethane	ND		0.00500
2-Chloroethyl vinyl ether	ND		0.0500
Chloroform	ND		0.00500
Chloromethane	ND		0.00250
2-Chlorotoluene	ND		0.00100
4-Chlorotoluene	ND		0.00100
1,2-Dibromo-3-Chloropropane	ND		0.00500
1,2-Dibromoethane	ND		0.00100
Dibromomethane	ND		0.00100
1,2-Dichlorobenzene	ND		0.00100
1,3-Dichlorobenzene	ND		0.00100
1,4-Dichlorobenzene	ND		0.00100
Dichlorodifluoromethane	ND		0.00500
1,1-Dichloroethane	ND		0.00100
1,2-Dichloroethane	ND		0.00100
1,1-Dichloroethene	ND		0.00100
cis-1,2-Dichloroethene	ND		0.00100
trans-1,2-Dichloroethene	ND		0.00100
1,2-Dichloropropane	ND		0.00100
1,1-Dichloropropene	ND		0.00100
1,3-Dichloropropane	ND		0.00100
cis-1,3-Dichloropropene	ND		0.00100
trans-1,3-Dichloropropene	ND		0.00100

Method Blank (MB)

(MB) 08/14/15 14:25

Analyte	MB Result mg/kg	MB Qualifier	MB RDL mg/kg
2,2-Dichloropropane	ND		0.00100
Dicyclopentadiene	ND		0.00100
Di-isopropyl ether	ND		0.00100
Ethylbenzene	ND		0.00100
Hexachloro-1,3-butadiene	ND		0.00100
Isopropylbenzene	ND		0.00100
p-Isopropyltoluene	ND		0.00100
2-Butanone (MEK)	ND		0.0100
Methylene Chloride	ND		0.00500
4-Methyl-2-pentanone (MIBK)	ND		0.0100
Methyl tert-butyl ether	ND		0.00100
Naphthalene	ND		0.00500
n-Propylbenzene	ND		0.00100
Styrene	ND		0.00100
1,1,1,2-Tetrachloroethane	ND		0.00100
1,1,2,2-Tetrachloroethane	ND		0.00100
Tetrachloroethene	ND		0.00100
Toluene	ND		0.00500
1,1,2-Trichlorotrifluoroethane	ND		0.00100
1,2,3-Trichlorobenzene	ND		0.00100
1,2,4-Trichlorobenzene	ND		0.00100
1,1,1-Trichloroethane	ND		0.00100
1,1,2-Trichloroethane	ND		0.00100
Trichloroethene	ND		0.00100
Trichlorofluoromethane	ND		0.00500
1,2,3-Trichloropropane	ND		0.00250
1,2,3-Trimethylbenzene	ND		0.00100
1,2,4-Trimethylbenzene	ND		0.00100
1,3,5-Trimethylbenzene	ND		0.00100
Vinyl chloride	ND		0.00100
Xylenes, Total	ND		0.00300
(S) Toluene-d8	*101*		*88.7-115*
(S) Dibromofluoromethane	*103*		*76.3-123*
(S) 4-Bromofluorobenzene	*87.9*		*69.7-129*

Laboratory Control Sample (LCS) • Laboratory Control Sample Duplicate (LCSD)

(LCS) 08/14/15 12:06 • (LCSD) 08/14/15 12:29

Analyte	Spike Amount mg/kg	LCS Result mg/kg	LCSD Result mg/kg	LCS Rec. %	LCSD Rec. %	Rec. Limits %	LCS Qualifier	LCSD Qualifier	RPD %	RPD Limits %
Acetone	0.125	0.153	0.153	122	122	25.3-178			0.0700	22.9
Acrylonitrile	0.125	0.147	0.153	118	122	57.8-143			3.83	20
Benzene	0.0250	0.0253	0.0271	101	108	72.6-120			6.78	20
Bromobenzene	0.0250	0.0232	0.0245	93.0	98.0	80.3-115			5.24	20
Bromodichloromethane	0.0250	0.0264	0.0284	105	114	75.3-119			7.35	20
Bromoform	0.0250	0.0213	0.0221	85.3	88.5	69.1-135			3.61	20
Bromomethane	0.0250	0.0344	0.0376	138	150	23.0-191			8.92	20
n-Butylbenzene	0.0250	0.0281	0.0297	113	119	74.2-134			5.50	20
sec-Butylbenzene	0.0250	0.0227	0.0247	90.6	98.9	77.8-129			8.77	20
tert-Butylbenzene	0.0250	0.0221	0.0240	88.4	96.2	77.2-129			8.44	20
Carbon tetrachloride	0.0250	0.0250	0.0266	99.9	106	69.4-129			6.17	20
Chlorobenzene	0.0250	0.0223	0.0236	89.0	94.3	78.9-122			5.74	20
Chlorodibromomethane	0.0250	0.0218	0.0231	87.3	92.4	76.4-126			5.67	20
Chloroethane	0.0250	0.0265	0.0277	106	111	47.2-147			4.46	20
2-Chloroethyl vinyl ether	0.125	0.0407	0.0391	32.6	31.3	16.7-162			3.98	23.7
Chloroform	0.0250	0.0268	0.0281	107	112	73.3-122			4.55	20
Chloromethane	0.0250	0.0267	0.0287	107	115	53.1-135			7.15	20
2-Chlorotoluene	0.0250	0.0218	0.0226	87.0	90.4	74.6-127			3.86	20
4-Chlorotoluene	0.0250	0.0236	0.0252	94.3	101	79.5-123			6.63	20
1,2-Dibromo-3-Chloropropane	0.0250	0.0221	0.0223	88.3	89.3	64.9-131			1.11	20
1,2-Dibromoethane	0.0250	0.0214	0.0223	85.7	89.2	78.7-123			3.91	20
Dibromomethane	0.0250	0.0237	0.0262	94.9	105	78.5-117			10.0	20
1,2-Dichlorobenzene	0.0250	0.0246	0.0255	98.3	102	83.6-119			3.65	20
1,3-Dichlorobenzene	0.0250	0.0216	0.0228	86.5	91.1	75.9-129			5.25	20
1,4-Dichlorobenzene	0.0250	0.0235	0.0245	94.2	98.1	81.0-115			4.06	20
Dichlorodifluoromethane	0.0250	0.0239	0.0252	95.5	101	50.9-139			5.59	20
1,1-Dichloroethane	0.0250	0.0280	0.0300	112	120	71.7-125			6.63	20
1,2-Dichloroethane	0.0250	0.0285	0.0295	114	118	67.2-121			3.47	20
1,1-Dichloroethene	0.0250	0.0279	0.0300	112	120	60.6-133			7.14	20
cis-1,2-Dichloroethene	0.0250	0.0250	0.0265	99.9	106	76.1-121			5.86	20
trans-1,2-Dichloroethene	0.0250	0.0243	0.0254	97.2	102	70.7-124			4.53	20
1,2-Dichloropropane	0.0250	0.0271	0.0289	108	116	76.9-123			6.45	20
1,1-Dichloropropene	0.0250	0.0268	0.0287	107	115	71.2-126			6.71	20
1,3-Dichloropropane	0.0250	0.0237	0.0246	94.8	98.3	80.3-114			3.68	20
cis-1,3-Dichloropropene	0.0250	0.0274	0.0289	110	116	77.3-123			5.17	20
trans-1,3-Dichloropropene	0.0250	0.0288	0.0292	115	117	73.0-127			1.36	20

Laboratory Control Sample (LCS) • Laboratory Control Sample Duplicate (LCSD)

(LCS) 08/14/15 12:06 • (LCSD) 08/14/15 12:29

Analyte	Spike Amount mg/kg	LCS Result mg/kg	LCSD Result mg/kg	LCS Rec. %	LCSD Rec. %	Rec. Limits %	LCS Qualifier	LCSD Qualifier	RPD %	RPD Limits %
2,2-Dichloropropane	0.0250	0.0291	0.0309	116	124	61.9-132			6.12	20
Dicyclopentadiene	0.0250	0.0248	0.0268	99.1	107	73.1-126			7.85	20
Di-isopropyl ether	0.0250	0.0317	0.0335	127	134	67.2-131		J4	5.67	20
Ethylbenzene	0.0250	0.0223	0.0237	89.3	94.7	78.6-124			5.92	20
Hexachloro-1,3-butadiene	0.0250	0.0250	0.0267	99.9	107	69.2-136			6.64	20
Isopropylbenzene	0.0250	0.0222	0.0240	88.7	95.8	79.4-126			7.75	20
p-Isopropyltoluene	0.0250	0.0229	0.0246	91.7	98.2	75.4-132			6.83	20
2-Butanone (MEK)	0.125	0.163	0.164	131	131	44.5-154			0.420	21.3
Methylene Chloride	0.0250	0.0246	0.0264	98.4	106	68.2-119			7.26	20
4-Methyl-2-pentanone (MIBK)	0.125	0.148	0.151	119	121	61.1-138			1.84	20
Methyl tert-butyl ether	0.0250	0.0264	0.0273	106	109	70.2-122			3.31	20
Naphthalene	0.0250	0.0243	0.0250	97.3	99.9	69.9-132			2.64	20
n-Propylbenzene	0.0250	0.0234	0.0249	93.6	99.4	80.2-124			6.03	20
Styrene	0.0250	0.0237	0.0251	94.7	100	79.4-124			5.79	20
1,1,1,2-Tetrachloroethane	0.0250	0.0225	0.0244	90.0	97.7	76.7-127			8.29	20
1,1,2,2-Tetrachloroethane	0.0250	0.0228	0.0241	91.3	96.3	78.8-124			5.33	20
Tetrachloroethene	0.0250	0.0212	0.0230	84.7	91.9	71.1-133			8.13	20
Toluene	0.0250	0.0238	0.0251	95.2	100	76.7-116			5.42	20
1,1,2-Trichlorotrifluoroethane	0.0250	0.0270	0.0292	108	117	62.6-138			7.68	20
1,2,3-Trichlorobenzene	0.0250	0.0254	0.0259	102	104	72.5-137			1.95	20
1,2,4-Trichlorobenzene	0.0250	0.0262	0.0273	105	109	74.0-137			4.31	20
1,1,1-Trichloroethane	0.0250	0.0268	0.0281	107	113	69.9-127			4.87	20
1,1,2-Trichloroethane	0.0250	0.0215	0.0232	86.0	92.8	81.9-119			7.68	20
Trichloroethene	0.0250	0.0227	0.0242	90.9	96.7	77.2-122			6.24	20
Trichlorofluoromethane	0.0250	0.0266	0.0280	106	112	51.5-151			5.31	20
1,2,3-Trichloropropane	0.0250	0.0216	0.0223	86.3	89.4	74.0-124			3.55	20
1,2,3-Trimethylbenzene	0.0250	0.0254	0.0270	102	108	79.4-118			6.10	20
1,2,4-Trimethylbenzene	0.0250	0.0228	0.0245	91.4	98.2	77.1-124			7.16	20
1,3,5-Trimethylbenzene	0.0250	0.0229	0.0244	91.6	97.5	79.0-125			6.23	20
Vinyl chloride	0.0250	0.0248	0.0264	99.4	106	58.4-134			6.25	20
Xylenes, Total	0.0750	0.0664	0.0713	88.6	95.1	78.1-123			7.11	20
(S) Toluene-d8				*101*	*101*	*88.7-115*				
(S) Dibromofluoromethane				*105*	*102*	*76.3-123*				
(S) 4-Bromofluorobenzene				*90.4*	*91.9*	*69.7-129*				

L782581-01 Original Sample (OS) • Matrix Spike (MS) • Matrix Spike Duplicate (MSD)

(OS) 08/14/15 14:48 • (MS) 08/14/15 15:12 • (MSD) 08/14/15 15:35

Analyte	Spike Amount mg/kg	Original Result mg/kg	MS Result mg/kg	MSD Result mg/kg	MS Rec. %	MSD Rec. %	Dilution	Rec. Limits %	MS Qualifier	MSD Qualifier	RPD %	RPD Limits %
Acetone	0.125	0.00309	0.659	0.719	105	115	5	10.0-130			8.63	31.5
Acrylonitrile	0.125	ND	0.663	0.719	106	115	5	39.3-152			8.19	27.2
Benzene	0.0250	ND	0.117	0.123	93.6	98.6	5	47.8-131			5.17	22.8
Bromobenzene	0.0250	ND	0.105	0.113	84.1	90.1	5	40.0-130			6.93	27.4
Bromodichloromethane	0.0250	ND	0.127	0.133	102	106	5	50.6-128			4.14	22.8
Bromoform	0.0250	ND	0.0975	0.108	78.0	86.5	5	43.3-139			10.3	25.9
Bromomethane	0.0250	ND	0.155	0.163	124	131	5	5.00-189			5.11	26.7
n-Butylbenzene	0.0250	ND	0.108	0.108	86.0	86.7	5	23.6-146			0.770	39.2
sec-Butylbenzene	0.0250	ND	0.0945	0.103	75.6	82.3	5	31.0-142			8.45	34.7
tert-Butylbenzene	0.0250	ND	0.0964	0.106	77.1	84.7	5	36.9-142			9.43	31.7
Carbon tetrachloride	0.0250	ND	0.115	0.119	91.9	95.1	5	46.0-140			3.41	27.2
Chlorobenzene	0.0250	ND	0.103	0.111	82.4	88.4	5	44.1-134			7.03	25.7
Chlorodibromomethane	0.0250	ND	0.103	0.110	82.0	88.2	5	49.7-134			7.24	24
Chloroethane	0.0250	ND	0.126	0.128	101	102	5	5.00-164			1.26	28.4
2-Chloroethyl vinyl ether	0.125	ND	0.136	0.148	21.7	23.6	5	5.00-159			8.55	40
Chloroform	0.0250	ND	0.124	0.130	99.4	104	5	51.2-133			4.78	22.8
Chloromethane	0.0250	ND	0.116	0.122	92.5	97.9	5	31.4-141			5.76	24.6
2-Chlorotoluene	0.0250	ND	0.0902	0.103	72.2	82.1	5	36.1-137			12.8	28.9
4-Chlorotoluene	0.0250	ND	0.0989	0.107	79.1	85.6	5	35.4-137			7.90	29.8
1,2-Dibromo-3-Chloropropane	0.0250	ND	0.100	0.108	80.1	86.2	5	40.4-138			7.39	30.8
1,2-Dibromoethane	0.0250	ND	0.0997	0.107	79.8	85.7	5	50.2-133			7.18	23.6
Dibromomethane	0.0250	ND	0.113	0.120	90.7	95.8	5	52.4-128			5.39	23
1,2-Dichlorobenzene	0.0250	ND	0.105	0.111	84.1	89.0	5	34.6-139			5.66	29.9
1,3-Dichlorobenzene	0.0250	ND	0.0885	0.0958	70.8	76.6	5	28.4-142			7.88	31.2
1,4-Dichlorobenzene	0.0250	ND	0.0999	0.104	79.9	83.4	5	35.0-133			4.28	31.1
Dichlorodifluoromethane	0.0250	ND	0.0979	0.0988	78.3	79.0	5	31.2-144			0.900	30.2
1,1-Dichloroethane	0.0250	ND	0.131	0.135	105	108	5	49.1-136			3.05	22.9
1,2-Dichloroethane	0.0250	ND	0.130	0.140	104	112	5	47.1-129			7.66	22.7
1,1-Dichloroethene	0.0250	ND	0.125	0.129	100	103	5	36.1-142			3.22	25.6
cis-1,2-Dichloroethene	0.0250	ND	0.115	0.120	92.0	96.1	5	50.6-133			4.42	23
trans-1,2-Dichloroethene	0.0250	ND	0.108	0.117	86.4	93.7	5	43.8-135			8.13	24.8
1,2-Dichloropropane	0.0250	ND	0.129	0.137	103	109	5	50.3-134			5.86	22.7
1,1-Dichloropropene	0.0250	ND	0.120	0.125	95.6	99.8	5	43.0-137			4.26	26.4
1,3-Dichloropropane	0.0250	ND	0.108	0.119	86.8	95.2	5	51.4-127			9.27	23.1
cis-1,3-Dichloropropene	0.0250	ND	0.128	0.133	102	106	5	48.4-134			4.09	23.6
trans-1,3-Dichloropropene	0.0250	ND	0.125	0.135	100	108	5	46.6-135			7.39	25.3

L782581-01 Original Sample (OS) • Matrix Spike (MS) • Matrix Spike Duplicate (MSD)

(OS) 08/14/15 14:48 • (MS) 08/14/15 15:12 • (MSD) 08/14/15 15:35

Analyte	Spike Amount mg/kg	Original Result mg/kg	MS Result mg/kg	MSD Result mg/kg	MS Rec. %	MSD Rec. %	Dilution	Rec. Limits %	MS Qualifier	MSD Qualifier	RPD %	RPD Limits %
2,2-Dichloropropane	0.0250	ND	0.133	0.139	106	111	5	45.2-141			5.01	26.6
Dicyclopentadiene	0.0250	ND	0.110	0.122	87.9	97.3	5	41.3-141			10.1	28.9
Di-isopropyl ether	0.0250	ND	0.147	0.154	117	123	5	46.7-140			5.06	23.5
Ethylbenzene	0.0250	ND	0.0996	0.107	79.7	85.2	5	44.8-135			6.72	26.9
Hexachloro-1,3-butadiene	0.0250	ND	0.0871	0.0878	69.7	70.2	5	10.0-149			0.780	40
Isopropylbenzene	0.0250	ND	0.0986	0.106	78.9	85.0	5	41.9-139			7.40	29.3
p-Isopropyltoluene	0.0250	ND	0.0919	0.101	73.6	80.5	5	27.3-146			9.02	35.1
2-Butanone (MEK)	0.125	ND	0.721	0.781	115	125	5	23.9-170			7.95	28.3
Methylene Chloride	0.0250	0.000938	0.114	0.122	90.7	96.6	5	46.7-125			6.32	22.2
4-Methyl-2-pentanone (MIBK)	0.125	ND	0.683	0.744	109	119	5	42.4-146			8.48	26.7
Methyl tert-butyl ether	0.0250	ND	0.119	0.130	95.0	104	5	50.4-131			8.75	24.8
Naphthalene	0.0250	ND	0.0920	0.103	73.6	82.5	5	18.4-145			11.4	34
n-Propylbenzene	0.0250	ND	0.100	0.105	80.0	84.2	5	35.2-139			5.02	31.9
Styrene	0.0250	ND	0.106	0.113	84.7	90.7	5	39.7-137			6.94	28.2
1,1,1,2-Tetrachloroethane	0.0250	ND	0.107	0.115	85.7	92.3	5	48.8-136			7.40	25.5
1,1,2,2-Tetrachloroethane	0.0250	ND	0.105	0.117	84.0	93.3	5	45.7-140			10.5	26.4
Tetrachloroethene	0.0250	ND	0.0902	0.0951	72.2	76.1	5	37.7-140			5.27	29.2
Toluene	0.0250	0.000465	0.112	0.116	89.6	92.8	5	47.8-127			3.52	24.3
1,1,2-Trichlorotrifluoroethane	0.0250	ND	0.116	0.118	92.9	94.6	5	35.7-146			1.77	28.8
1,2,3-Trichlorobenzene	0.0250	ND	0.0883	0.0957	70.7	76.6	5	10.0-150			8.06	38.5
1,2,4-Trichlorobenzene	0.0250	ND	0.0880	0.0948	70.4	75.8	5	10.0-153			7.45	39.3
1,1,1-Trichloroethane	0.0250	ND	0.124	0.129	99.4	103	5	49.0-138			3.95	25.3
1,1,2-Trichloroethane	0.0250	ND	0.104	0.112	83.0	89.5	5	52.3-132			7.53	23.4
Trichloroethene	0.0250	ND	0.103	0.109	82.1	86.8	5	48.0-132			5.60	24.8
Trichlorofluoromethane	0.0250	ND	0.117	0.119	93.3	95.4	5	12.8-169			2.28	29.7
1,2,3-Trichloropropane	0.0250	ND	0.0983	0.113	78.6	90.2	5	44.4-138			13.7	26.3
1,2,3-Trimethylbenzene	0.0250	ND	0.111	0.117	89.1	93.2	5	41.0-133			4.44	27.6
1,2,4-Trimethylbenzene	0.0250	ND	0.0963	0.105	77.0	84.2	5	32.9-139			8.95	30.6
1,3,5-Trimethylbenzene	0.0250	ND	0.0975	0.106	78.0	84.5	5	37.1-138			8.03	30.6
Vinyl chloride	0.0250	ND	0.106	0.113	84.5	90.5	5	32.0-146			6.83	26.3
Xylenes, Total	0.0750	ND	0.298	0.322	79.5	85.9	5	42.7-135			7.73	26.6
(S) Toluene-d8					*102*	*102*		*88.7-115*				
(S) Dibromofluoromethane					*99.4*	*103*		*76.3-123*				
(S) 4-Bromofluorobenzene					*88.9*	*93.5*		*69.7-129*				

Method Blank (MB)

(MB) 08/17/15 12:24

Analyte	MB Result mg/kg	MB Qualifier	MB RDL mg/kg
Naphthalene	ND		0.00500

Laboratory Control Sample (LCS) • Laboratory Control Sample Duplicate (LCSD)

(LCS) 08/17/15 10:40 • (LCSD) 08/17/15 11:01

Analyte	Spike Amount mg/kg	LCS Result mg/kg	LCSD Result mg/kg	LCS Rec. %	LCSD Rec. %	Rec. Limits %	LCS Qualifier	LCSD Qualifier	RPD %	RPD Limits %
Naphthalene	0.0250	0.0287	0.0281	115	112	69.9-132			2.08	20

Method Blank (MB)

(MB) 08/17/15 11:24

Analyte	MB Result mg/kg	MB Qualifier	MB RDL mg/kg
Acetone	ND		0.0500
Acrylonitrile	ND		0.0100
Benzene	ND		0.00100
Bromobenzene	ND		0.00100
Bromodichloromethane	ND		0.00100
Bromoform	ND		0.00100
Bromomethane	ND		0.00500
n-Butylbenzene	ND		0.00100
sec-Butylbenzene	ND		0.00100
tert-Butylbenzene	ND		0.00100
Carbon tetrachloride	ND		0.00100
Chlorobenzene	ND		0.00100
Chlorodibromomethane	ND		0.00100
Chloroethane	ND		0.00500
2-Chloroethyl vinyl ether	ND		0.0500
Chloroform	ND		0.00500
Chloromethane	ND		0.00250
2-Chlorotoluene	ND		0.00100
4-Chlorotoluene	ND		0.00100
1,2-Dibromo-3-Chloropropane	ND		0.00500
1,2-Dibromoethane	ND		0.00100
Dibromomethane	ND		0.00100
1,2-Dichlorobenzene	ND		0.00100
1,3-Dichlorobenzene	ND		0.00100
1,4-Dichlorobenzene	ND		0.00100
Dichlorodifluoromethane	ND		0.00500
1,1-Dichloroethane	ND		0.00100
1,2-Dichloroethane	ND		0.00100
1,1-Dichloroethene	ND		0.00100
cis-1,2-Dichloroethene	ND		0.00100
trans-1,2-Dichloroethene	ND		0.00100
1,2-Dichloropropane	ND		0.00100
1,1-Dichloropropene	ND		0.00100
1,3-Dichloropropane	ND		0.00100
cis-1,3-Dichloropropene	ND		0.00100
trans-1,3-Dichloropropene	ND		0.00100

Method Blank (MB)

(MB) 08/17/15 11:24

Analyte	MB Result mg/kg	MB Qualifier	MB RDL mg/kg
2,2-Dichloropropane	ND		0.00100
Dicyclopentadiene	ND		0.00100
Di-isopropyl ether	ND		0.00100
Ethylbenzene	ND		0.00100
Hexachloro-1,3-butadiene	ND		0.00100
Isopropylbenzene	ND		0.00100
p-Isopropyltoluene	ND		0.00100
2-Butanone (MEK)	ND		0.0100
Methylene Chloride	ND		0.00500
4-Methyl-2-pentanone (MIBK)	ND		0.0100
Methyl tert-butyl ether	ND		0.00100
Naphthalene	ND		0.00500
n-Propylbenzene	ND		0.00100
Styrene	ND		0.00100
1,1,1,2-Tetrachloroethane	ND		0.00100
1,1,2,2-Tetrachloroethane	ND		0.00100
Tetrachloroethene	ND		0.00100
Toluene	ND		0.00500
1,1,2-Trichlorotrifluoroethane	ND		0.00100
1,2,3-Trichlorobenzene	ND		0.00100
1,2,4-Trichlorobenzene	ND		0.00100
1,1,1-Trichloroethane	ND		0.00100
1,1,2-Trichloroethane	ND		0.00100
Trichloroethene	ND		0.00100
Trichlorofluoromethane	ND		0.00500
1,2,3-Trichloropropane	ND		0.00250
1,2,3-Trimethylbenzene	ND		0.00100
1,2,4-Trimethylbenzene	ND		0.00100
1,3,5-Trimethylbenzene	ND		0.00100
Vinyl chloride	ND		0.00100
Xylenes, Total	ND		0.00300
(S) Toluene-d8	*99.2*		*88.7-115*
(S) Dibromofluoromethane	*94.9*		*76.3-123*
(S) 4-Bromofluorobenzene	*97.7*		*69.7-129*

Laboratory Control Sample (LCS) • Laboratory Control Sample Duplicate (LCSD)

(LCS) 08/17/15 09:48 • (LCSD) 08/17/15 10:07

Analyte	Spike Amount mg/kg	LCS Result mg/kg	LCSD Result mg/kg	LCS Rec. %	LCSD Rec. %	Rec. Limits %	LCS Qualifier	LCSD Qualifier	RPD %	RPD Limits %
Acetone	0.125	0.109	0.107	87.2	85.6	25.3-178			1.84	22.9
Acrylonitrile	0.125	0.112	0.113	89.7	90.4	57.8-143			0.730	20
Benzene	0.0250	0.0230	0.0234	91.9	93.6	72.6-120			1.91	20
Bromobenzene	0.0250	0.0247	0.0253	98.8	101	80.3-115			2.55	20
Bromodichloromethane	0.0250	0.0237	0.0244	94.8	97.5	75.3-119			2.77	20
Bromoform	0.0250	0.0252	0.0264	101	106	69.1-135			4.73	20
Bromomethane	0.0250	0.0219	0.0216	87.6	86.3	23.0-191			1.53	20
n-Butylbenzene	0.0250	0.0249	0.0251	99.5	101	74.2-134			1.08	20
sec-Butylbenzene	0.0250	0.0248	0.0257	99.2	103	77.8-129			3.46	20
tert-Butylbenzene	0.0250	0.0248	0.0259	99.0	103	77.2-129			4.39	20
Carbon tetrachloride	0.0250	0.0237	0.0233	94.8	93.3	69.4-129			1.60	20
Chlorobenzene	0.0250	0.0256	0.0270	103	108	78.9-122			5.17	20
Chlorodibromomethane	0.0250	0.0261	0.0274	104	109	76.4-126			4.69	20
Chloroethane	0.0250	0.0223	0.0216	89.3	86.3	47.2-147			3.42	20
2-Chloroethyl vinyl ether	0.125	0.0840	0.0903	67.2	72.2	16.7-162			7.24	23.7
Chloroform	0.0250	0.0235	0.0235	94.2	94.1	73.3-122			0.0900	20
Chloromethane	0.0250	0.0184	0.0174	73.4	69.5	53.1-135			5.45	20
2-Chlorotoluene	0.0250	0.0259	0.0271	104	108	74.6-127			4.31	20
4-Chlorotoluene	0.0250	0.0244	0.0251	97.7	100	79.5-123			2.80	20
1,2-Dibromo-3-Chloropropane	0.0250	0.0248	0.0260	99.1	104	64.9-131			4.93	20
1,2-Dibromoethane	0.0250	0.0247	0.0258	98.6	103	78.7-123			4.55	20
Dibromomethane	0.0250	0.0239	0.0239	95.7	95.5	78.5-117			0.160	20
1,2-Dichlorobenzene	0.0250	0.0266	0.0270	106	108	83.6-119			1.41	20
1,3-Dichlorobenzene	0.0250	0.0259	0.0268	104	107	75.9-129			3.45	20
1,4-Dichlorobenzene	0.0250	0.0256	0.0257	102	103	81.0-115			0.160	20
Dichlorodifluoromethane	0.0250	0.0234	0.0227	93.4	90.8	50.9-139			2.91	20
1,1-Dichloroethane	0.0250	0.0239	0.0238	95.5	95.3	71.7-125			0.230	20
1,2-Dichloroethane	0.0250	0.0231	0.0233	92.5	93.1	67.2-121			0.560	20
1,1-Dichloroethene	0.0250	0.0246	0.0244	98.4	97.7	60.6-133			0.740	20
cis-1,2-Dichloroethene	0.0250	0.0241	0.0243	96.5	97.3	76.1-121			0.830	20
trans-1,2-Dichloroethene	0.0250	0.0242	0.0241	96.7	96.2	70.7-124			0.510	20
1,2-Dichloropropane	0.0250	0.0239	0.0242	95.4	96.8	76.9-123			1.44	20
1,1-Dichloropropene	0.0250	0.0234	0.0234	93.7	93.8	71.2-126			0.120	20
1,3-Dichloropropane	0.0250	0.0232	0.0250	92.8	100	80.3-114			7.61	20
cis-1,3-Dichloropropene	0.0250	0.0252	0.0252	101	101	77.3-123			0.0700	20
trans-1,3-Dichloropropene	0.0250	0.0250	0.0261	99.9	104	73.0-127			4.26	20

Laboratory Control Sample (LCS) • Laboratory Control Sample Duplicate (LCSD)

(LCS) 08/17/15 09:48 • (LCSD) 08/17/15 10:07

Analyte	Spike Amount mg/kg	LCS Result mg/kg	LCSD Result mg/kg	LCS Rec. %	LCSD Rec. %	Rec. Limits %	LCS Qualifier	LCSD Qualifier	RPD %	RPD Limits %
2,2-Dichloropropane	0.0250	0.0236	0.0233	94.2	93.2	61.9-132			1.10	20
Dicyclopentadiene	0.0250	0.0244	0.0255	97.8	102	73.1-126			4.16	20
Di-isopropyl ether	0.0250	0.0234	0.0235	93.4	93.8	67.2-131			0.430	20
Ethylbenzene	0.0250	0.0256	0.0266	102	106	78.6-124			3.72	20
Hexachloro-1,3-butadiene	0.0250	0.0240	0.0245	96.1	98.1	69.2-136			2.08	20
Isopropylbenzene	0.0250	0.0244	0.0252	97.6	101	79.4-126			3.30	20
p-Isopropyltoluene	0.0250	0.0249	0.0261	99.7	104	75.4-132			4.66	20
2-Butanone (MEK)	0.125	0.102	0.102	81.9	81.9	44.5-154			0.0600	21.3
Methylene Chloride	0.0250	0.0224	0.0223	89.6	89.2	68.2-119			0.440	20
4-Methyl-2-pentanone (MIBK)	0.125	0.104	0.106	83.4	85.2	61.1-138			2.14	20
Methyl tert-butyl ether	0.0250	0.0238	0.0245	95.1	98.2	70.2-122			3.23	20
Naphthalene	0.0250	0.0238	0.0245	95.0	98.0	69.9-132			3.07	20
n-Propylbenzene	0.0250	0.0251	0.0261	100	104	80.2-124			3.96	20
Styrene	0.0250	0.0268	0.0275	107	110	79.4-124			2.82	20
1,1,1,2-Tetrachloroethane	0.0250	0.0254	0.0269	102	108	76.7-127			5.82	20
1,1,2,2-Tetrachloroethane	0.0250	0.0241	0.0259	96.5	104	78.8-124			7.23	20
Tetrachloroethene	0.0250	0.0268	0.0280	107	112	71.1-133			4.37	20
Toluene	0.0250	0.0242	0.0243	96.6	97.2	76.7-116			0.650	20
1,1,2-Trichlorotrifluoroethane	0.0250	0.0259	0.0256	103	102	62.6-138			1.14	20
1,2,3-Trichlorobenzene	0.0250	0.0258	0.0268	103	107	72.5-137			3.84	20
1,2,4-Trichlorobenzene	0.0250	0.0267	0.0271	107	108	74.0-137			1.31	20
1,1,1-Trichloroethane	0.0250	0.0233	0.0233	93.1	93.2	69.9-127			0.0400	20
1,1,2-Trichloroethane	0.0250	0.0261	0.0274	105	110	81.9-119			4.75	20
Trichloroethene	0.0250	0.0258	0.0259	103	104	77.2-122			0.250	20
Trichlorofluoromethane	0.0250	0.0225	0.0219	90.0	87.6	51.5-151			2.78	20
1,2,3-Trichloropropane	0.0250	0.0228	0.0249	91.4	99.7	74.0-124			8.67	20
1,2,3-Trimethylbenzene	0.0250	0.0243	0.0246	97.4	98.3	79.4-118			0.930	20
1,2,4-Trimethylbenzene	0.0250	0.0239	0.0247	95.6	98.7	77.1-124			3.17	20
1,3,5-Trimethylbenzene	0.0250	0.0245	0.0254	97.9	101	79.0-125			3.56	20
Vinyl chloride	0.0250	0.0230	0.0222	91.8	88.8	58.4-134			3.33	20
Xylenes, Total	0.0750	0.0761	0.0793	101	106	78.1-123			4.13	20
(S) Toluene-d8				*101*	*99.8*	*88.7-115*				
(S) Dibromofluoromethane				*95.6*	*94.3*	*76.3-123*				
(S) 4-Bromofluorobenzene				*97.5*	*100*	*69.7-129*				

Method Blank (MB)

(MB) 08/17/15 11:31

Analyte	MB Result mg/kg	MB Qualifier	MB RDL mg/kg
Acenaphthene	ND		0.0330
Acenaphthylene	ND		0.0330
Anthracene	ND		0.0330
Benzidine	ND		0.333
Benzo(a)anthracene	ND		0.0330
Benzo(b)fluoranthene	ND		0.0330
Benzo(k)fluoranthene	ND		0.0330
Benzo(g,h,i)perylene	ND		0.0330
Benzo(a)pyrene	ND		0.0330
Bis(2-chlorethoxy)methane	ND		0.333
Bis(2-chloroethyl)ether	ND		0.333
Bis(2-chloroisopropyl)ether	ND		0.333
4-Bromophenyl-phenylether	ND		0.333
2-Chloronaphthalene	ND		0.0330
4-Chlorophenyl-phenylether	ND		0.333
Chrysene	ND		0.0330
Dibenz(a,h)anthracene	ND		0.0330
3,3-Dichlorobenzidine	ND		0.333
2,4-Dinitrotoluene	ND		0.333
2,6-Dinitrotoluene	ND		0.333
Fluoranthene	ND		0.0330
Fluorene	ND		0.0330
Hexachlorobenzene	ND		0.333
Hexachloro-1,3-butadiene	ND		0.333
Hexachlorocyclopentadiene	ND		0.333
Hexachloroethane	ND		0.333
Indeno(1,2,3-cd)pyrene	ND		0.0330
Isophorone	ND		0.333
Naphthalene	ND		0.0330
Nitrobenzene	ND		0.333
n-Nitrosodimethylamine	ND		0.333
n-Nitrosodiphenylamine	ND		0.333
n-Nitrosodi-n-propylamine	ND		0.333
Phenanthrene	ND		0.0330
Benzylbutyl phthalate	ND		0.333
Bis(2-ethylhexyl)phthalate	ND		0.333

Method Blank (MB)

(MB) 08/17/15 11:31

Analyte	MB Result mg/kg	MB Qualifier	MB RDL mg/kg
Di-n-butyl phthalate	ND		0.333
Diethyl phthalate	ND		0.333
Dimethyl phthalate	ND		0.333
Di-n-octyl phthalate	ND		0.333
Pyrene	ND		0.0330
1,2,4-Trichlorobenzene	ND		0.333
4-Chloro-3-methylphenol	ND		0.333
2-Chlorophenol	ND		0.333
2,4-Dichlorophenol	ND		0.333
2,4-Dimethylphenol	ND		0.333
4,6-Dinitro-2-methylphenol	ND		0.333
2,4-Dinitrophenol	ND		0.333
2-Nitrophenol	ND		0.333
4-Nitrophenol	ND		0.333
Pentachlorophenol	ND		0.333
Phenol	ND		0.333
2,4,6-Trichlorophenol	ND		0.333
(S) Nitrobenzene-d5	*77.6*		*21.9-129*
(S) 2-Fluorobiphenyl	*74.7*		*34.9-129*
(S) p-Terphenyl-d14	*71.8*		*21.5-128*
(S) Phenol-d5	*77.9*		*26.3-121*
(S) 2-Fluorophenol	*73.2*		*21.1-116*
(S) 2,4,6-Tribromophenol	*75.1*		*21.6-142*

Laboratory Control Sample (LCS) • Laboratory Control Sample Duplicate (LCSD)

(LCS) 08/17/15 10:42 • (LCSD) 08/17/15 11:06

Analyte	Spike Amount mg/kg	LCS Result mg/kg	LCSD Result mg/kg	LCS Rec. %	LCSD Rec. %	Rec. Limits %	LCS Qualifier	LCSD Qualifier	RPD %	RPD Limits %
Acenaphthene	0.667	0.592	0.519	88.7	77.8	48.9-107			13.2	20
Acenaphthylene	0.667	0.612	0.535	91.8	80.3	49.2-111			13.4	20
Anthracene	0.667	0.605	0.537	90.7	80.5	52.0-112			12.0	20
Benzidine	0.667	0.134	0.109	20.1	16.3	0.000-48.0			20.7	40
Benzo(a)anthracene	0.667	0.610	0.553	91.5	83.0	52.3-106			9.78	20
Benzo(b)fluoranthene	0.667	0.618	0.543	92.6	81.4	51.3-106			12.9	20
Benzo(k)fluoranthene	0.667	0.614	0.544	92.1	81.6	52.9-107			12.0	20

Laboratory Control Sample (LCS) • Laboratory Control Sample Duplicate (LCSD)

(LCS) 08/17/15 10:42 • (LCSD) 08/17/15 11:06

Analyte	Spike Amount mg/kg	LCS Result mg/kg	LCSD Result mg/kg	LCS Rec. %	LCSD Rec. %	Rec. Limits %	LCS Qualifier	LCSD Qualifier	RPD %	RPD Limits %
Benzo(g,h,i)perylene	0.667	0.622	0.552	93.3	82.7	45.8-108			12.0	20
Benzo(a)pyrene	0.667	0.621	0.545	93.0	81.6	51.9-106			13.1	20
Bis(2-chlorethoxy)methane	0.667	0.564	0.483	84.6	72.4	44.9-108			15.6	20
Bis(2-chloroethyl)ether	0.667	0.545	0.463	81.7	69.4	32.5-112			16.3	26
Bis(2-chloroisopropyl)ether	0.667	0.553	0.471	82.9	70.6	40.4-99.0			16.0	20.7
4-Bromophenyl-phenylether	0.667	0.629	0.550	94.3	82.5	51.4-110			13.3	20
2-Chloronaphthalene	0.667	0.628	0.534	94.2	80.1	47.1-105			16.2	20
4-Chlorophenyl-phenylether	0.667	0.588	0.507	88.2	76.1	48.1-108			14.7	20
Chrysene	0.667	0.583	0.528	87.5	79.1	54.4-110			10.0	20
Dibenz(a,h)anthracene	0.667	0.616	0.549	92.3	82.4	45.7-111			11.4	20
3,3-Dichlorobenzidine	0.667	0.579	0.553	86.8	83.0	21.0-101			4.51	22
2,4-Dinitrotoluene	0.667	0.690	0.586	103	87.8	53.0-112			16.4	20
2,6-Dinitrotoluene	0.667	0.673	0.585	101	87.7	51.6-110			14.0	20
Fluoranthene	0.667	0.597	0.517	89.5	77.6	53.7-110			14.3	20
Fluorene	0.667	0.592	0.521	88.7	78.0	51.1-109			12.8	20
Hexachlorobenzene	0.667	0.593	0.511	88.9	76.7	43.2-104			14.8	20.1
Hexachloro-1,3-butadiene	0.667	0.536	0.446	80.3	66.9	41.5-112			18.3	20
Hexachlorocyclopentadiene	0.667	0.371	0.311	55.6	46.7	13.5-123			17.5	20.7
Hexachloroethane	0.667	0.548	0.443	82.2	66.5	36.2-103			21.1	22.7
Indeno(1,2,3-cd)pyrene	0.667	0.628	0.550	94.2	82.5	47.5-109			13.2	20
Isophorone	0.667	0.663	0.563	99.4	84.5	28.8-104			16.3	20
Naphthalene	0.667	0.542	0.461	81.2	69.2	43.4-103			16.0	20
Nitrobenzene	0.667	0.588	0.498	88.2	74.6	40.7-109			16.6	21
n-Nitrosodimethylamine	0.667	0.546	0.472	81.9	70.8	18.1-122			14.6	23.5
n-Nitrosodiphenylamine	0.667	0.608	0.531	91.1	79.6	48.8-107			13.4	20
n-Nitrosodi-n-propylamine	0.667	0.631	0.521	94.7	78.1	43.3-109			19.2	20
Phenanthrene	0.667	0.605	0.522	90.7	78.2	51.6-107			14.7	20
Benzylbutyl phthalate	0.667	0.686	0.614	103	92.0	47.5-115			11.0	20
Bis(2-ethylhexyl)phthalate	0.667	0.687	0.616	103	92.3	48.1-116			10.9	20.5
Di-n-butyl phthalate	0.667	0.657	0.585	98.5	87.7	49.7-113			11.6	20
Diethyl phthalate	0.667	0.663	0.578	99.4	86.6	52.0-112			13.8	20
Dimethyl phthalate	0.667	0.657	0.566	98.5	84.8	51.4-108			14.9	20
Di-n-octyl phthalate	0.667	0.704	0.624	106	93.6	49.6-112			12.0	22
Pyrene	0.667	0.627	0.573	94.0	85.9	47.1-108			9.06	20
1,2,4-Trichlorobenzene	0.667	0.523	0.440	78.4	65.9	39.8-100			17.2	20
4-Chloro-3-methylphenol	0.667	0.637	0.546	95.6	81.9	51.1-113			15.4	20

Laboratory Control Sample (LCS) • Laboratory Control Sample Duplicate (LCSD)

(LCS) 08/17/15 10:42 • (LCSD) 08/17/15 11:06

Analyte	Spike Amount mg/kg	LCS Result mg/kg	LCSD Result mg/kg	LCS Rec. %	LCSD Rec. %	Rec. Limits %	LCS Qualifier	LCSD Qualifier	RPD %	RPD Limits %
2-Chlorophenol	0.667	0.551	0.442	82.7	66.3	40.8-103		J3	22.0	20
2,4-Dichlorophenol	0.667	0.577	0.494	86.5	74.0	46.2-109			15.5	20
2,4-Dimethylphenol	0.667	0.558	0.514	83.7	77.1	42.2-110			8.21	20
4,6-Dinitro-2-methylphenol	0.667	0.612	0.520	91.7	77.9	23.1-119			16.2	23.7
2,4-Dinitrophenol	0.667	0.401	0.335	60.1	50.2	10.0-105			17.9	36.5
2-Nitrophenol	0.667	0.626	0.528	93.8	79.1	44.2-113			17.0	20.9
4-Nitrophenol	0.667	0.647	0.568	97.0	85.1	34.8-109			13.0	20
Pentachlorophenol	0.667	0.496	0.377	74.3	56.6	16.2-102		J3	27.1	22.9
Phenol	0.667	0.559	0.462	83.9	69.2	41.5-106			19.2	20
2,4,6-Trichlorophenol	0.667	0.593	0.523	88.8	78.4	44.4-108			12.5	20
(S) Nitrobenzene-d5				*80.2*	*69.7*	*21.9-129*				
(S) 2-Fluorobiphenyl				*78.2*	*69.2*	*34.9-129*				
(S) p-Terphenyl-d14				*68.3*	*63.2*	*21.5-128*				
(S) Phenol-d5				*76.9*	*63.0*	*26.3-121*				
(S) 2-Fluorophenol				*72.6*	*59.5*	*21.1-116*				
(S) 2,4,6-Tribromophenol				*79.8*	*67.5*	*21.6-142*				

Abbreviations and Definitions

SDG	Sample Delivery Group.
MDL	Method Detection Limit.
RDL	Reported Detection Limit.
ND,U	Not detected at the Reporting Limit (or MDL where applicable).
RPD	Relative Percent Difference.
(dry)	Results are reported based on the dry weight of the sample. [this will only be present on a dry report basis for soils].
Original Sample	The non-spiked sample in the prep batch used to determine the Relative Percent Difference (RPD) from a quality control sample. The Original Sample may not be included within the reported SDG.
(S)	Surrogate (Surrogate Standard) - Analytes added to every blank, sample, Laboratory Control Sample/Duplicate and Matrix Spike/Duplicate; used to evaluate analytical efficiency by measuring recovery. Surrogates are not expected to be detected in all environmental media.
Rec.	Recovery.
SDL	Sample Detection Limit.
MQL	Method Quantitation Limit.
Unadj. MQL	Unadjusted Method Quantitation Limit.

Qualifier	Description
J1	Surrogate recovery limits have been exceeded; values are outside upper control limits.
J3	The associated batch QC was outside the established quality control range for precision.
J4	The associated batch QC was outside the established quality control range for accuracy.
J5	The sample matrix interfered with the ability to make any accurate determination; spike value is high.
J7	Surrogate recovery cannot be used for control limit evaluation due to dilution.

ACCREDITATIONS & LOCATIONS

ONE LAB. NATIONWIDE.

ESC Lab Sciences is the only environmental laboratory accredited/certified to support your work nationwide from one location. One phone call, one point of contact, one laboratory. No other lab is as accessible or prepared to handle your needs throughout the country. Our capacity and capability from our single location laboratory is comparable to the collective totals of the network laboratories in our industry. The most significant benefit to our "one location" design is the design of our laboratory campus. The model is conducive to accelerated productivity, decreasing turn-around time, and preventing cross contamination, thus protecting sample integrity. Our focus on premium quality and prompt service allows us to be **YOUR LAB OF CHOICE.**

State Accreditations

Alabama	40660
Alaska	UST-080
Arizona	AZ0612
Arkansas	88-0469
California	01157CA
Colorado	TN00003
Conneticut	PH-0197
Florida	E87487
Georgia	NELAP
Georgia [1]	923
Idaho	TN00003
Illinois	200008
Indiana	C-TN-01
Iowa	364
Kansas	E-10277
Kentucky [1]	90010
Kentucky [2]	16
Louisiana	AI30792
Maine	TN0002
Maryland	324
Massachusetts	M-TN003
Michigan	9958
Minnesota	047-999-395
Mississippi	TN00003
Missouri	340
Montana	CERT0086
Nebraska	NE-OS-15-05
Nevada	TN-03-2002-34
New Hampshire	2975
New Jersey–NELAP	TN002
New Mexico	TN00003
New York	11742
North Carolina	Env375
North Carolina [1]	DW21704
North Carolina [2]	41
North Dakota	R-140
Ohio–VAP	CL0069
Oklahoma	9915
Oregon	TN200002
Pennsylvania	68-02979
Rhode Island	221
South Carolina	84004
South Dakota	n/a
Tennessee [1 4]	2006
Texas	T 104704245-07-TX
Texas [5]	LAB0152
Utah	6157585858
Vermont	VT2006
Virginia	109
Washington	C1915
West Virginia	233
Wisconsin	9980939910
Wyoming	A2LA

[1.] Drinking Water [2.] Underground Storage Tanks [3.] Aquatic Toxicity [4.] Chemical/Microbiological [5.] Mold [n/a] Accreditation not applicable

Third Party & Federal Accreditations

A2LA – ISO 17025	1461.01
Canada	1461.01
EPA–Crypto	TN00003
AIHA	100789
DOD	1461.01
USDA	S-67674

Our Locations

ESC Lab Sciences has sixty-four client support centers that provide sample pickup and/or the delivery of sampling supplies. If you would like assistance from one of our support offices, please contact our main office. **ESC Lab Sciences performs all testing at our central laboratory.**

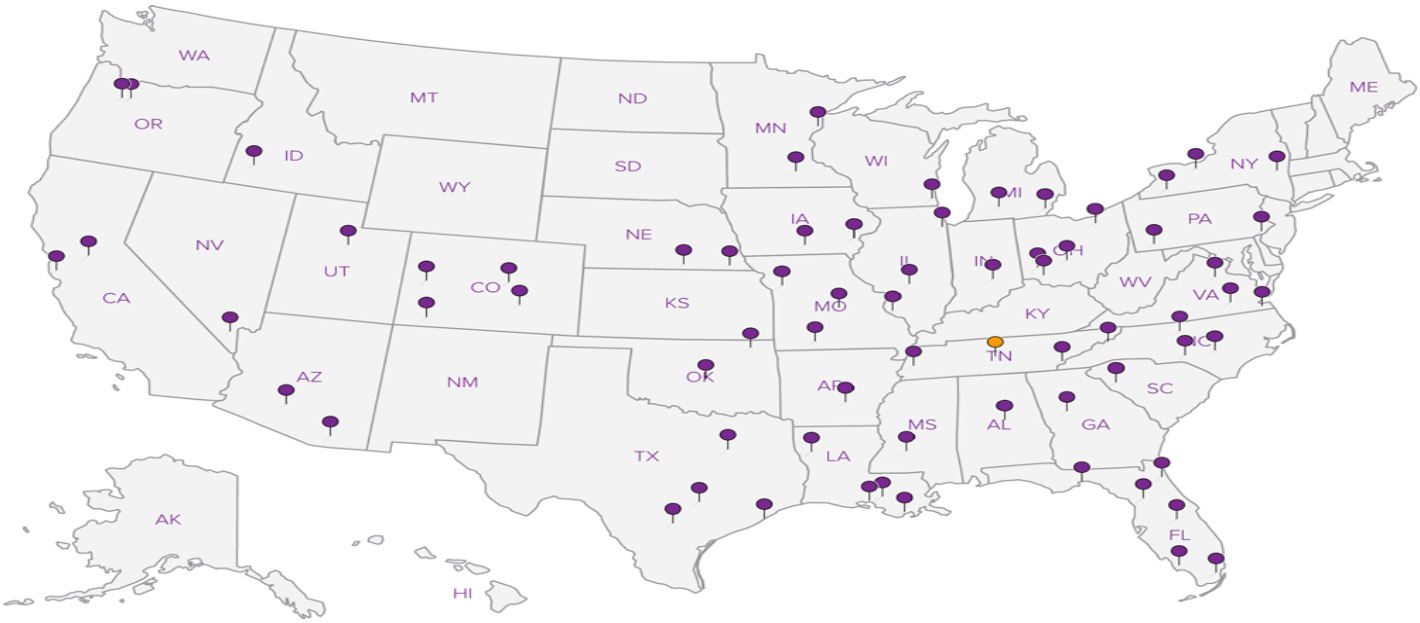

Terracon Consultants - B-Ham AL.

110 12th Street North
Birmingham, AL 35203

Billing Information:
Trey Noland
110 12th Street North
Birmingham, AL 35203

Report to: Trey Noland

Email To: wgnoland@terracon.com

Project Description: Site Investigation

City/State Collected: Moundville, AL

Phone: 205-942-1289
Fax:

Client Project # E1157122

Lab Project # GALLET-E1157122

Collected by (print): Brian Brown

Site/Facility ID # Veros Energy

P.O. # E1157122

Collected by (signature): [signature]

Immediately Packed on Ice N ___ Y ✓

Rush? (Lab MUST Be Notified)
___ Same Day 200%
___ Next Day 100%
___ Two Day 50%
___ Three Day 25%

Date Results Needed

Email? ___No X__Yes
FAX? ___No ___Yes

Analysis / Container / Preservative

Chain of Custody Page 1 of 2

ESC LAB SCIENCES
YOUR LAB OF CHOICE
12065 Lebanon Rd
Mount Juliet, TN 37122
Phone: 615-758-5858
Phone: 800-767-5859
Fax: 615-758-5859

L# 782651
G153

Acctnum: GALLET
Template: T104725
Prelogin: P520201
TSR: 350 - Jimmy Hunt
PB: 8-7-15 MM
Shipped Via: FedEx Ground

Sample ID	Comp/Grab	Matrix *	Depth	Date	Time	No. of Cntrs	SV8270[redacted], MRCRA8 4ozClr-NoPres	V8260, TS 2ozClr-NoPres									Rem./Contaminant	Sample # (lab only)
SB-13 0-1	Grab	SS	—	8/12/15	0911	2	X	X										01
SB-13 3-5		SS	—		0918	2	X	X										02
SB-14 0-1		SS	—		0940	2	X	X										03
SB-14 1-3		SS	—		0944	2	X	X										04
SB-15 0-1		SS	—		0959	2	X	X										05
SB-15 3-5		SS	—		1005	2	X	X										06
SB-16 0-1		SS	—		1019	2	X	X										07
SB-16 1-3		SS	—		102[illegible]7	2	X	X										08
HA-1 0-1		SS	—		1110	2	X	X										09
HA-1 1-3		SS	—		1119	2	X	X										10

* Matrix: SS - Soil GW - Groundwater WW - WasteWater DW - Drinking Water OT - Other_____

pH _____ Temp _____
Flow _____ Other _____

Remarks: Only 0-1 intervals get a RCRA M analysis

Relinquished by : (Signature)	Date:	Time:	Received by: (Signature)
[signature]	8/12/15	16:00	
Relinquished by : (Signature)	Date:	Time:	Received by: (Signature)
Relinquished by : (Signature)	Date:	Time:	Received for lab by: (Signature)
			[signature]

Samples returned via: ☐ UPS ☒ FedEx ☐ Courier ☐ _____

Temp: 0 °C Bottles Received: 32
2.4c

Date: 8/13/15 Time: 0900

Hold #

Condition: (lab use only) ok TDI

COC Seal Intact: ✓ Y ___N ✓ NA

pH Checked: NCF:

Terracon Consultants - B-Ham AL.

110 12th Street North
Birmingham, AL 35203

Billing Information:
Lisa Sharman
110 12th Street North
Birmingham, AL 35203

Report to: Trey Noland

Email To: wgnoland@terracon.com

Project Description: Site Investigation

City/State Collected: Moundville, AL

Phone: 205-942-1289
Fax: 205-443-1266

Client Project # E1157122

Lab Project # GALLET - E1157122

Collected by (print): Brian Brown

Site/Facility ID # Vevos Energy

P.O. # E1157122

Collected by (signature): B Brown

Immediately Packed on Ice N ___ Y ✓

Rush? (Lab MUST Be Notified)
___ Same Day 200%
___ Next Day 100%
___ Two Day 50%
___ Three Day 25%

Date Results Needed

Email? ___No ___Yes
FAX? ___No ___Yes

Analysis / Container / Preservative

Chain of Custody Page 2 of 2

ESC LAB SCIENCES
YOUR LAB OF CHOICE
12065 Lebanon Rd
Mount Juliet, TN 37122
Phone: 615-758-5858
Phone: 800-767-5859
Fax: 615-758-5859

L# 782656

Table #

Acctnum: GALLET
Template:
Prelogin:
TSR: 350 - Jimmy Hunt
PB:
Shipped Via:

Sample ID	Comp/Grab	Matrix *	Depth	Date	Time	No. of Cntrs	RCRA Metals	SVOCs - 8270	VOCs - 8260	Rem./Contaminant	Sample # (lab only)
HA-2 0-1	Grab	SS	—	8/12/15	1137	2	X	X	X		11
HA-2 3-5	↓	↓	—	↓	1141	2		X	X		12
HA-3 0-1	↓	↓	—	↓	1150	2	X	X	X		13
HA-3 3-5	↓	↓	—	↓	1155	2		X	X		14
HA-4 0-1	↓	↓	—	↓	1212	2	X	X	X		15
HA-4 3-5	↓	↓	—	↓	1218	2		X	X		16

BB

* Matrix: **SS** - Soil **GW** - Groundwater **WW** - WasteWater **DW** - Drinking Water **OT** - Other_____

Remarks:

pH _____ Temp _____
Flow _____ Other _____

Hold #

Relinquished by : (Signature)	Date:	Time:	Received by: (Signature)
B Brown	8/12/15	16:00	
Relinquished by : (Signature)	Date:	Time:	Received by: (Signature)
Relinquished by : (Signature)	Date:	Time:	Received for lab by: (Signature)
			Jerry Cook

Samples returned via: ☐ UPS ☒ FedEx ☐ Courier ☐ _____

Temp: 24.0 °C Bottles Received: 32

Date: 8/13/15 Time: 0900

Condition: (lab use only) ✓ TDI

COC Seal Intact: ✓ Y ___N ___NA

pH Checked: NCF:

L782656

Jimmy Hunt

From: Brown, Brian B <Brian.Brown@terracon.com>
Sent: Wednesday, August 12, 2015 4:07 PM
To: Jimmy Hunt
Subject: RE: Veros Energy

And also report on Dicyclopentadiene on the soil samples from today that you will receive tomorrow. Thanks and sorry for the confusion.

From: Jimmy Hunt [mailto:JHunt@esclabsciences.com]
Sent: Wednesday, August 12, 2015 1:52 PM
To: Noland III, Trey G; Brown, Brian B
Subject: Veros Energy

Trey/Brian,
The attached COC lists SB-2 @ 0-1FT collected at 0929. We did not receive a sample with that label, but we received SB-1 @ 0-1FT collected at 0929. We logged that SB-1 sample as SB-2 per the COC. Please let me know if that is not correct.

Thanks,

Jimmy Hunt
Technical Service Representative
Phone: 615-773-9668
Toll Free: 1-800-767-5859 ext:9668
Email: jhunt@esclabsciences.com

This E-mail and any attached files are confidential, and may be copyright protected. If you are not the addressee, any dissemination of this communication is strictly prohibited. If you have received this message in error, please contact the sender immediately and delete/destroy all information received.

Notice: This communication and any attached files may contain privileged or other confidential information. If you have received this in error, please contact the sender immediately via reply email and immediately delete the message and any attachments without copying or disclosing the contents. Thank you.

Terracon provides environmental, facilities, geotechnical, and materials consulting engineering services delivered with responsiveness, resourcefulness, and reliability.

Private and confidential as detailed here (www.terracon.com/disclaimer). If you cannot access hyperlink, please e-mail sender.

L782656

Jimmy Hunt

From: Brown, Brian B <Brian.Brown@terracon.com>
Sent: Wednesday, August 12, 2015 4:14 PM
To: Jimmy Hunt
Subject: RE: Veros Energy

And these are also a 2 day turnaround. Once again, sorry to blow up your inbox.

From: Jimmy Hunt [mailto:JHunt@esclabsciences.com]
Sent: Wednesday, August 12, 2015 1:52 PM
To: Noland III, Trey G; Brown, Brian B
Subject: Veros Energy

Trey/Brian,
The attached COC lists SB-2 @ 0-1FT collected at 0929. We did not receive a sample with that label, but we received SB-1 @ 0-1FT collected at 0929. We logged that SB-1 sample as SB-2 per the COC. Please let me know if that is not correct.

Thanks,

Jimmy Hunt
Technical Service Representative
Phone: 615-773-9668
Toll Free: 1-800-767-5859 ext:9668
Email: jhunt@esclabsciences.com

This E-mail and any attached files are confidential, and may be copyright protected. If you are not the addressee, any dissemination of this communication is strictly prohibited. If you have received this message in error, please contact the sender immediately and delete/destroy all information received.

Notice: This communication and any attached files may contain privileged or other confidential information. If you have received this in error, please contact the sender immediately via reply email and immediately delete the message and any attachments without copying or disclosing the contents. Thank you.

Terracon provides environmental, facilities, geotechnical, and materials consulting engineering services delivered with responsiveness, resourcefulness, and reliability.

Private and confidential as detailed here (www.terracon.com/disclaimer). If you cannot access hyperlink, please e-mail sender.

ANALYTICAL REPORT

August 26, 2015

Terracon Consultants - B-Ham AL.

Sample Delivery Group:	L783603
Samples Received:	08/13/2015
Project Number:	E1157122
Description:	Site Investigation
Site:	Veros Energy
Report To:	Trey Noland 110 12th Street North Birmingham, AL 35203

Entire Report Reviewed By:

Jimmy Hunt
Technical Service Representative

Results relate only to the items tested or calibrated and are reported as rounded values. This test report shall not be reproduced, except in full, without written approval of the laboratory. Where applicable, sampling conducted by ESC is performed per guidance provided in laboratory standard operating procedures: 060302, 060303, and 060304.

TABLE OF CONTENTS

[1]Cp: Cover Page 1

[2]Tc: Table of Contents 2

[3]Ss: Sample Summary 3

[4]Cn: Case Narrative 4

[5]Sr: Sample Results 5

SB-16 0-1 FT L783603-01 5

[6]Qc: Quality Control Summary 6

Total Solids by Method 2540 G-2011 6

Wet Chemistry by Method 7199 7

[7]Gl: Glossary of Terms 8

[8]Al: Accreditations & Locations 9

[9]Sc: Chain of Custody 10

SB-16 0-1 FT L783603-01 Solid

Collected by	Collected date/time	Received date/time
Brian Brown	08/12/15 10:19	08/13/15 09:00

Method	Batch	Dilution	Preparation date/time	Analysis date/time	Analysis Analyst
Total Solids by Method 2540 G-2011	WG809040	1	08/14/15 14:56	08/15/15 08:45	KDW
Wet Chemistry by Method 7199	WG810678	1	08/25/15 08:41	08/25/15 13:04	MCG

1 Cp
2 Tc
3 Ss
4 Cn
5 Sr
6 Qc
7 Gl
8 Al
9 Sc

All sample aliquots were received at the correct temperature, in the proper containers, with the appropriate preservatives, and within method specified holding times. All MDL (LOD) and RDL (LOQ) values reported for environmental samples have been corrected for the dilution factor used in the analysis. All Method and Batch Quality Control are within established criteria except where addressed in this case narrative, a non-conformance form or properly qualified within the sample results. By my digital signature below, I affirm to the best of my knowledge, all problems/anomalies observed by the laboratory as having the potential to affect the quality of the data have been identified by the laboratory, and no information or data have been knowingly withheld that would affect the quality of the

Jimmy Hunt

Jimmy Hunt
Technical Service Representative

Total Solids by Method 2540 G-2011

Analyte	Result %	Qualifier	Dilution	Analysis date / time	Batch
Total Solids	90.3		1	08/15/2015 08:45	WG809040

Wet Chemistry by Method 7199

Analyte	Result (dry) mg/kg	Qualifier	RDL (dry) mg/kg	Dilution	Analysis date / time	Batch
Hexavalent Chromium	ND		1.11	1	08/25/2015 13:04	WG810678

QUALITY CONTROL SUMMARY

L783603-01

Method Blank (MB)

(MB) 08/15/15 08:43

Analyte	MB Result	MB Qualifier	MB RDL
	%		%
Total Solids	0.000700		

L782656-06 Original Sample (OS) • Duplicate (DUP)

(OS) 08/15/15 08:44 • (DUP) 08/15/15 08:45

Analyte	Original Result	DUP Result	Dilution	DUP RPD	DUP Qualifier	DUP RPD Limits
	%	%		%		%
Total Solids	89.1	89.1	1	0.0619		5

Laboratory Control Sample (LCS)

(LCS) 08/15/15 08:43

Analyte	Spike Amount	LCS Result	LCS Rec.	Rec. Limits	LCS Qualifier
	%	%	%	%	
Total Solids	50.0	50.0	100	85.0-115	

Method Blank (MB)

(MB) 08/25/15 11:45

Analyte	MB Result mg/l	MB Qualifier	MB RDL mg/l
Hexavalent Chromium	ND		1.00

Laboratory Control Sample (LCS) • Laboratory Control Sample Duplicate (LCSD)

(LCS) 08/25/15 12:00 • (LCSD) 08/25/15 12:07

Analyte	Spike Amount mg/l	LCS Result mg/l	LCSD Result mg/l	LCS Rec. %	LCSD Rec. %	Rec. Limits %	LCS Qualifier	LCSD Qualifier	RPD %	RPD Limits %
Hexavalent Chromium	59.8	48.7	51.4	81.0	86.0	80.0-120			5.00	20

L783939-01 Original Sample (OS) • Matrix Spike (MS) • Matrix Spike Duplicate (MSD)

(OS) 08/25/15 13:10 • (MS) 08/25/15 13:16 • (MSD) 08/25/15 13:23

Analyte	Spike Amount mg/l	Original Result mg/kg	MS Result mg/l	MSD Result mg/l	MS Rec. %	MSD Rec. %	Dilution	Rec. Limits %	MS Qualifier	MSD Qualifier	RPD %	RPD Limits %
Hexavalent Chromium	20.0	0.907	21.4	20.5	103	98.0	1	75.0-125			4.00	20

1 Cp
2 Tc
3 Ss
4 Cn
5 Sr
6 Qc
7 Gl
8 Al
9 Sc

Abbreviations and Definitions

SDG	Sample Delivery Group.
MDL	Method Detection Limit.
RDL	Reported Detection Limit.
ND,U	Not detected at the Reporting Limit (or MDL where applicable).
RPD	Relative Percent Difference.
(dry)	Results are reported based on the dry weight of the sample. [this will only be present on a dry report basis for soils].
Original Sample	The non-spiked sample in the prep batch used to determine the Relative Percent Difference (RPD) from a quality control sample. The Original Sample may not be included within the reported SDG.
(S)	Surrogate (Surrogate Standard) - Analytes added to every blank, sample, Laboratory Control Sample/Duplicate and Matrix Spike/Duplicate; used to evaluate analytical efficiency by measuring recovery. Surrogates are not expected to be detected in all environmental media.
Rec.	Recovery.
SDL	Sample Detection Limit.
MQL	Method Quantitation Limit.
Unadj. MQL	Unadjusted Method Quantitation Limit.

Qualifier	Description
	The remainder of this page intentionally left blank, there are no qualifiers applied to this SDG.

ACCREDITATIONS & LOCATIONS

ONE LAB. NATIONWIDE.

ESC Lab Sciences is the only environmental laboratory accredited/certified to support your work nationwide from one location. One phone call, one point of contact, one laboratory. No other lab is as accessible or prepared to handle your needs throughout the country. Our capacity and capability from our single location laboratory is comparable to the collective totals of the network laboratories in our industry. The most significant benefit to our "one location" design is the design of our laboratory campus. The model is conducive to accelerated productivity, decreasing turn-around time, and preventing cross contamination, thus protecting sample integrity. Our focus on premium quality and prompt service allows us to be **YOUR LAB OF CHOICE.**

State Accreditations

Alabama	40660
Alaska	UST-080
Arizona	AZ0612
Arkansas	88-0469
California	01157CA
Colorado	TN00003
Conneticut	PH-0197
Florida	E87487
Georgia	NELAP
Georgia [1]	923
Idaho	TN00003
Illinois	200008
Indiana	C-TN-01
Iowa	364
Kansas	E-10277
Kentucky [1]	90010
Kentucky [2]	16
Louisiana	AI30792
Maine	TN0002
Maryland	324
Massachusetts	M-TN003
Michigan	9958
Minnesota	047-999-395
Mississippi	TN00003
Missouri	340
Montana	CERT0086
Nebraska	NE-OS-15-05
Nevada	TN-03-2002-34
New Hampshire	2975
New Jersey–NELAP	TN002
New Mexico	TN00003
New York	11742
North Carolina	Env375
North Carolina [1]	DW21704
North Carolina [2]	41
North Dakota	R-140
Ohio–VAP	CL0069
Oklahoma	9915
Oregon	TN200002
Pennsylvania	68-02979
Rhode Island	221
South Carolina	84004
South Dakota	n/a
Tennessee [1 4]	2006
Texas	T 104704245-07-TX
Texas [5]	LAB0152
Utah	6157585858
Vermont	VT2006
Virginia	109
Washington	C1915
West Virginia	233
Wisconsin	9980939910
Wyoming	A2LA

[1.] Drinking Water [2.] Underground Storage Tanks [3.] Aquatic Toxicity [4.] Chemical/Microbiological [5.] Mold [n/a] Accreditation not applicable

Third Party & Federal Accreditations

A2LA – ISO 17025	1461.01
Canada	1461.01
EPA–Crypto	TN00003
AIHA	100789
DOD	1461.01
USDA	S-67674

Our Locations

ESC Lab Sciences has sixty-four client support centers that provide sample pickup and/or the delivery of sampling supplies. If you would like assistance from one of our support offices, please contact our main office. **ESC Lab Sciences performs all testing at our central laboratory.**

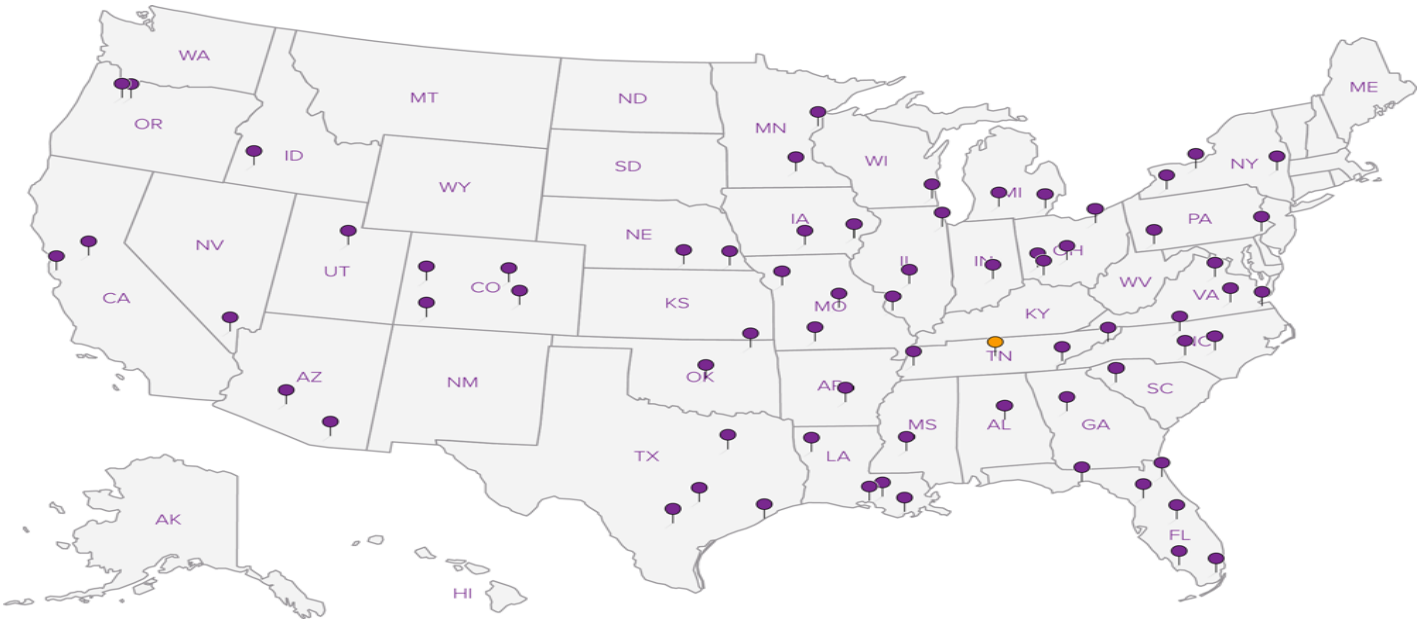

L783603

Chain of Custody Page 1 of 2

ESC LAB SCIENCES
YOUR LAB OF CHOICE
12065 Lebanon Rd
Mount Juliet, TN 37122
Phone: 615-758-5858
Phone: 800-767-5859
Fax: 615-758-5859

L# 783651
G153

Acctnum: GALLET
Template: T104725
Prelogin: P520201
TSR: 350 - Jimmy Hunt
PB: 8-7-15 MJ
Shipped Via: FedEX Ground

Terracon Consultants - B-Ham AL.
110 12th Street North
Birmingham, AL 35203

Billing Information:
Trey Noland
110 12th Street North
Birmingham, AL 35203

Report to: Trey Noland
Email To: wgnoland@terracon.com

Project Description: Site Investigation
City/State Collected: Moundville, AL

Phone: 205-942-1289
Fax:
Client Project # E1157122
Lab Project # GALLET-E1157122

Collected by (print): Brian Brown
Site/Facility ID # Veros Energy
P.O. # E1157122

Collected by (signature): B. B.
Immediately Packed on Ice N ___ Y ✓
Rush? (Lab MUST Be Notified)
___ Same Day 200%
___ Next Day 100%
___ Two Day 50%
___ Three Day 25%
Date Results Needed
Email? ___No X__Yes
FAX? ___No ___Yes

Analysis / Container / Preservative

Sample ID	Comp/Grab	Matrix *	Depth	Date	Time	No. of Cntrs	SV8270[redacted], MRCRA8 4ozClr-NoPres	V8260, TS 2ozClr-NoPres								Rem./Contaminant	Sample # (lab only)
SB-13 0-1	Grab	SS	—	8/12/15	0911	2	X	X									01
SB-13 3-5		SS	—		0918	2	X	X									02
SB-14 0-1		SS	—		0940	2	X	X									03
SB-14 1-3		SS	—		0944	2	X	X									04
SB-15 0-1		SS	—		0959	2	X	X									05
SB-15 3-5		SS	—		1005	2	X	X									06
SB-16 0-1		SS	—		1019	2	X	X									07-01
SB-16 1-3		SS	—		1027	2	X	X									08
HA-1 0-1		SS	—		1110	2	X	X									09
HA-1 1-3		SS	—		1119	2	X	X									10

* Matrix: SS - Soil GW - Groundwater WW - WasteWater DW - Drinking Water OT - Other_____

Remarks: Only 0-1 intervals get a RCRA M analysis

pH _____ Temp _____
Flow _____ Other _____

Hold #

Relinquished by : (Signature)	Date:	Time:	Received by: (Signature)
B. B.	8/12/15	16:00	
Relinquished by : (Signature)	Date:	Time:	Received by: (Signature)
Relinquished by : (Signature)	Date:	Time:	Received for lab by: (Signature)
			Jeremy [illegible]

Samples returned via: ☐ UPS ☒ FedEx ☐ Courier ☐ _____
Temp: 0.4 °C Bottles Received: 32
Date: 8/13/15 Time: 0900

Condition: (lab use only) ✓ TOI
COC Seal Intact: ✓ Y ___N ✓ NA
pH Checked: NCF:

L783603

Jeremy W. Watkins

From: Jimmy Hunt
Sent: Tuesday, August 18, 2015 3:56 PM
To: Login
Subject: FW: ESC Lab Sciences Report for E1157122 Site Investigation L782656

Please relog L782656-07 (SB-16@0-1FT) from GALLET for CR6IC and TS. Move the TS from L782656-07 to the new sample number. Make it R5 due 8/25/15.

Thanks,
Jimmy

-----Original Message-----
From: Noland III, Trey G [mailto:Trey.Noland@terracon.com]
Sent: Tuesday, August 18, 2015 2:48 PM
To: Jimmy Hunt
Subject: RE: ESC Lab Sciences Report for E1157122 Site Investigation L782656

Jimmy,

Please further analyze SB-16 0-1 FT for hexavalent chromium. Thanks.

Trey

-----Original Message-----
From: jhunt@esclabsciences.com [mailto:jhunt@esclabsciences.com]
Sent: Monday, August 17, 2015 7:31 PM
To: Noland III, Trey G; mking@cecinc.com
Subject: ESC Lab Sciences Report for E1157122 Site Investigation L782656
Importance: High

Thank you for choosing ESC Lab Sciences!

Please find enclosed PDF files containing your laboratory analysis and chain of custody.

ESC is pleased to announce that we are accepting samples from 21 states for the new 3511 prep technique for PAHs by 8270 and 8270SIM. This technique allows for a 98% reduction in solvent usage, and requires only 2 to 3 40 mL non-preserved amber vials vs. the traditional 1 or 2 amber liter jars. Please contact your Technical Service Representative for details.

ESC is leading the laboratory industry with our On-line Data Management tools. Please contact your Technical Service Representative to learn how to create historical Excel tables or access data in real time using powerful and intuitive software that is only available at http://cp.mcafee.com/d/k-Kr6xAp4x8SyMOqenDNPPzVKVJd5BddxBBxYSCyOCCepud7a9Jd5BddxBBxMSzuXzOrzRQPsU-mW5jZww2F_6eSH3BPs_z7rlxOVLi5xOq3X_nUsCUqenASuLsKCOCZOb2pEV7eenWyaqRQRrCzB7BgY-F6IK1FJ4SOrLObxEVuhhpjKYrKr01viN-AamBYbvjBPoyjrxc5viN-AamBYbvjBPr1EVd7arzP1Iq618Qg1ni1Ew6bi-5LEq80nWRoPd43JoCy0qhhv78FFCy0oBfPh06Mc_isyePBm1Ew2EVVdNZMSUOrBb9E.

L 783603

How are we doing? ESC would like to hear from you. Please take a moment and complete our customer feedback survey at http://cp.mcafee.com/d/k-Kr40Ue6hESyMOqenDNPPzVKVJd5BddxBBxYSCyOCCepud7a9Jd5BddxBBxMSzuXzOrzRQPsU-mW5jZww2F_6eSH3BPs_z7rlxOVLi5xOq3X_nUsCUqenASuLsKCOCZOb2pEV7eenWyaqRQRrCzB7BgY-F6lK1FJcSOrLObxEVuhhpjKYrKr9PCJhbcathK9DOOJo5vbsLBc18A4wGczwir4irs9wHWmfQxiQLxrWsKrod79EVjsuodzgM96y0aWgd40NqnMJZ3h02_mH6pEwtH4Qg3iabUV5dcQg34F-q80S1DWjAhSsGMd40l7f9KfK6T6js9wRiotUwo6o.

ESC ... "Your Lab of Choice"

Jimmy Hunt
Technical Service Representative
615-773-9668
jhunt@esclabsciences.com

ESC Lab Sciences
12065 Lebanon Rd
Mount Juliet, TN 37122
http://cp.mcafee.com/d/k-Kr6x8SyMOqenDNPPzVKVJd5BddxBBxYSCyOCCepud7a9Jd5BddxBBxMSzuXzOrzRQPsU-mW5jZww2F_6eSH3BPs_z7rlxOVLi5xOq3X_nUsCUqenASuLsKCOCZOb2pEV7eenWyaqRQRrCzB7BgY-F6lK1FJASOrLObxEVuhhpjKYrKratZb7WgFqnMJZendy9dK4MlZb7WgFqnMJZendI6zAQsFKfc6NEo4zh05t86y0oJbUm-xEw1vHlzcQgeRyq81F55YsyCCq81yk_d40r0PZ9O8Xelo6y0azDAT7T3rz9LpckBxEoERc1

Notice: This communication and any attached files may contain privileged or other confidential information. If you have received this in error, please contact the sender immediately via reply email and immediately delete the message and any attachments without copying or disclosing the contents. Thank you.

Terracon provides environmental, facilities, geotechnical, and materials consulting engineering services delivered with responsiveness, resourcefulness, and reliability.

Private and confidential as detailed here (www.terracon.com/disclaimer). If you cannot access hyperlink, please e-mail sender.

H&P Mobile Geochemistry Inc.

19 February 2016

Mr. Jim Fineis
Atlas Geo-Sampling Company
120 Nottaway Lane
Alpharetta, GA 30009

H&P Project: AG100615-15 Rev
Client Project: Terracon Moundville

Dear Mr. Jim Fineis:

Enclosed is the analytical report for the above referenced project. The data herein applies to samples as received by H&P Mobile Geochemistry, Inc. on 10/6/2015 -10/12/2015which were analyzed in accordance with the attached Chain of Custody record(s).

The results for all sample analyses and required QA/QC analyses are presented in the following sections and summarized in the documents:

- Sample Summary
- Case Narrative (if applicable)
- Sample Results
- Quality Control Summary
- Notes and Definitions / Appendix
- Chain of Custody
- Sampling Logs (if applicable)

Unless otherwise noted, I certify that all analyses were performed and reviewed in compliance with our Quality Systems Manual and Standard Operating Procedures. This report shall not be reproduced, except in full, without the written approval of H&P Mobile Geochemistry, Inc.

We at H&P Mobile Geochemistry, Inc. sincerely appreciate the opportunity to provide analytical services to you on this project. If you have any questions or concerns regarding this analytical report, please contact me at your convenience at 760-804-9678.

Sincerely,

Janis Villarreal

Janis Villarreal
Laboratory Director

H&P Mobile Geochemistry, Inc. is certified under the California ELAP, the National Environmental Laboratory Accreditation Conference (NELAC) and the Department of Defense Accreditation Programs.

H&P Mobile
Geochemistry Inc.

2470 Impala Drive
Carlsbad, CA 92010
760-804-9678 Phone
760-804-9159 Fax

Atlas Geo-Sampling Company	Project:	AG100615-15 Rev	
120 Nottaway Lane	Project Number:	Terracon Moundville	Reported:
Alpharetta, GA 30009	Project Manager:	Mr. Jim Fineis	19-Feb-16 13:05

ANALYTICAL REPORT FOR SAMPLES

Sample ID	Laboratory ID	Matrix	Date Sampled	Date Received
SS1 (240)	E510048-02	Vapor	01-Oct-15	06-Oct-15
SS2 (240)	E510048-04	Vapor	01-Oct-15	06-Oct-15
SS3 (1200)	E510048-05	Vapor	01-Oct-15	06-Oct-15
SS4 (1200)	E510048-07	Vapor	01-Oct-15	06-Oct-15
SS12 (1200)	E510048-09	Vapor	01-Oct-15	06-Oct-15
SS13 (1200)	E510048-11	Vapor	01-Oct-15	06-Oct-15
SS14 (1200)	E510048-13	Vapor	01-Oct-15	06-Oct-15
SS6 (1200)	E510048-15	Vapor	01-Oct-15	06-Oct-15
SS5 (240)	E510048-18	Vapor	01-Oct-15	06-Oct-15
SS7 (240)	E510048-20	Vapor	01-Oct-15	06-Oct-15
SS8 (240)	E510048-22	Vapor	01-Oct-15	06-Oct-15
SS9 (240)	E510048-24	Vapor	01-Oct-15	06-Oct-15
SS11 (240)	E510048-26	Vapor	01-Oct-15	06-Oct-15
Trip Blank	E510048-27	Vapor	01-Oct-15	06-Oct-15
SS1	E510066-01	Vapor	01-Oct-15	06-Oct-15
SS2	E510066-02	Vapor	01-Oct-15	06-Oct-15
SS3	E510066-03	Vapor	01-Oct-15	06-Oct-15
SS12	E510066-04	Vapor	01-Oct-15	06-Oct-15
SS6	E510066-05	Vapor	01-Oct-15	06-Oct-15
SS5	E510066-06	Vapor	01-Oct-15	06-Oct-15
SS7	E510066-07	Vapor	01-Oct-15	06-Oct-15
SS8	E510066-08	Vapor	01-Oct-15	06-Oct-15
SS9	E510066-09	Vapor	01-Oct-15	06-Oct-15
SS11	E510066-10	Vapor	01-Oct-15	06-Oct-15
SS4	E510067-01	Vapor	01-Oct-15	12-Oct-15
SS13	E510067-02	Vapor	01-Oct-15	12-Oct-15
SS14	E510067-03	Vapor	01-Oct-15	12-Oct-15

H&P Mobile
Geochemistry Inc.

2470 Impala Drive
Carlsbad, CA 92010
760-804-9678 Phone
760-804-9159 Fax

Atlas Geo-Sampling Company	Project:	AG100615-15 Rev	
120 Nottaway Lane	Project Number:	Terracon Moundville	Reported:
Alpharetta, GA 30009	Project Manager:	Mr. Jim Fineis	19-Feb-16 13:05

Due to the presence of elevated analyte concentrations, the following summa samples were analyzed using H&P 8260SV rather than EPA Method TO-15:
SS7 (H&P ID E510066-07)
SS8 (H&P ID E510066-08)
SS9 (H&P ID E510066-09)
SS11 (H&P ID E510066-11)

The following EPA TO-15 analytes are not reported using H&P 8260SV:
Dichlorotetrafluoroethane
Carbon Disulfide
4-Ethyltoluene

Due to interferences in the samples and/or coelution with 1,2,4-Trimethylbenzene, the tentatively identified compound (TIC), 1,2,3-Trimethylbenzene can only be reported for sample SS12. Based on the chemical properties of 1,2,4-Trimethylbenzene and 1,2,3-Trimethylbenzene, it can be inferred that the concentration of 1,2,3-Trimethylbenzene in each sample should not exceed the concentration of 1,2,4-Trimethylbenzene reported for each sample.

H&P 8260SV

The percent recovery for Dichlorodifluoromethane fell below the method criteria in the continuing calibration verification; any results for this analyte may be biased low.

H&P Mobile
Geochemistry Inc.

2470 Impala Drive
Carlsbad, CA 92010
760-804-9678 Phone
760-804-9159 Fax

Atlas Geo-Sampling Company	Project: AG100615-15 Rev	
120 Nottaway Lane	Project Number: Terracon Moundville	Reported:
Alpharetta, GA 30009	Project Manager: Mr. Jim Fineis	19-Feb-16 13:05

DETECTIONS SUMMARY

Sample ID: **SS1 (240)** Laboratory ID: **E510048-02**

Analyte	Result	Reporting Limit	Units	Method	Notes
Dicyclopentadiene	**4100**	420	ug/m3	H&P TO-17	

Sample ID: **SS2 (240)** Laboratory ID: **E510048-04**

Analyte	Result	Reporting Limit	Units	Method	Notes
Dicyclopentadiene	**37000**	420	ug/m3	H&P TO-17	E

Sample ID: **SS3 (1200)** Laboratory ID: **E510048-05**

Analyte	Result	Reporting Limit	Units	Method	Notes
Dicyclopentadiene	**46**	4.2	ug/m3	H&P TO-17	

Sample ID: **SS4 (1200)** Laboratory ID: **E510048-07**

Analyte	Result	Reporting Limit	Units	Method	Notes
Dicyclopentadiene	**5.2**	4.2	ug/m3	H&P TO-17	

Sample ID: **SS12 (1200)** Laboratory ID: **E510048-09**

Analyte	Result	Reporting Limit	Units	Method	Notes
Dicyclopentadiene	**6.3**	4.2	ug/m3	H&P TO-17	

Sample ID: **SS13 (1200)** Laboratory ID: **E510048-11**

Analyte	Result	Reporting Limit	Units	Method	Notes
No Detections Reported					

Sample ID: **SS14 (1200)** Laboratory ID: **E510048-13**

Analyte	Result	Reporting Limit	Units	Method	Notes
No Detections Reported					

Sample ID: **SS6 (1200)** Laboratory ID: **E510048-15**

Analyte	Result	Reporting Limit	Units	Method	Notes
No Detections Reported					

H&P Mobile
Geochemistry Inc.

2470 Impala Drive
Carlsbad, CA 92010
760-804-9678 Phone
760-804-9159 Fax

Atlas Geo-Sampling Company	Project:	AG100615-15 Rev	
120 Nottaway Lane	Project Number:	Terracon Moundville	Reported:
Alpharetta, GA 30009	Project Manager:	Mr. Jim Fineis	19-Feb-16 13:05

Sample ID: **SS5 (240)** Laboratory ID: **E510048-18**

Analyte	Result	Reporting Limit	Units	Method	Notes
Dicyclopentadiene	**1200**	420	ug/m3	H&P TO-17	

Sample ID: **SS7 (240)** Laboratory ID: **E510048-20**

Analyte	Result	Reporting Limit	Units	Method	Notes
Dicyclopentadiene	**89000**	4200	ug/m3	H&P TO-17	E

Sample ID: **SS8 (240)** Laboratory ID: **E510048-22**

Analyte	Result	Reporting Limit	Units	Method	Notes
Dicyclopentadiene	**40000**	4200	ug/m3	H&P TO-17	E

Sample ID: **SS9 (240)** Laboratory ID: **E510048-24**

Analyte	Result	Reporting Limit	Units	Method	Notes
Dicyclopentadiene	**63000**	4200	ug/m3	H&P TO-17	E

Sample ID: **SS11 (240)** Laboratory ID: **E510048-26**

Analyte	Result	Reporting Limit	Units	Method	Notes
Dicyclopentadiene	**48000**	4200	ug/m3	H&P TO-17	E

Sample ID: **Trip Blank** Laboratory ID: **E510048-27**

Analyte	Result	Reporting Limit	Units	Method	Notes
No Detections Reported					

Sample ID: **SS1** Laboratory ID: **E510066-01**

Analyte	Result	Reporting Limit	Units	Method	Notes
Acetone	**320**	24	ug/m3	EPA TO-15	
2-Butanone (MEK)	**96**	30	ug/m3	EPA TO-15	
Benzene	**33**	3.2	ug/m3	EPA TO-15	
Trichloroethene	**6.1**	5.5	ug/m3	EPA TO-15	
4-Methyl-2-pentanone (MIBK)	**24**	8.3	ug/m3	EPA TO-15	
Toluene	**58**	3.8	ug/m3	EPA TO-15	
Ethylbenzene	**7.1**	4.4	ug/m3	EPA TO-15	QL-1L
m,p-Xylene	**25**	8.8	ug/m3	EPA TO-15	
o-Xylene	**9.3**	4.4	ug/m3	EPA TO-15	

H&P Mobile
Geochemistry Inc.

2470 Impala Drive
Carlsbad, CA 92010
760-804-9678 Phone
760-804-9159 Fax

Atlas Geo-Sampling Company	Project:	AG100615-15 Rev	
120 Nottaway Lane	Project Number:	Terracon Moundville	Reported:
Alpharetta, GA 30009	Project Manager:	Mr. Jim Fineis	19-Feb-16 13:05

Sample ID: **SS1** Laboratory ID: **E510066-01**

Analyte	Result	Reporting Limit	Units	Method	Notes
1,2,4-Trimethylbenzene	**8.9**	5.0	ug/m3	EPA TO-15	

Sample ID: **SS2** Laboratory ID: **E510066-02**

Analyte	Result	Reporting Limit	Units	Method	Notes
Methylene chloride (Dichloromethane)	**7.8**	7.1	ug/m3	EPA TO-15	
2-Butanone (MEK)	**93**	60	ug/m3	EPA TO-15	
Benzene	**57**	6.5	ug/m3	EPA TO-15	
4-Methyl-2-pentanone (MIBK)	**37**	17	ug/m3	EPA TO-15	
Toluene	**42**	7.6	ug/m3	EPA TO-15	
Ethylbenzene	**17**	8.8	ug/m3	EPA TO-15	QL-1L
m,p-Xylene	**80**	18	ug/m3	EPA TO-15	
o-Xylene	**31**	8.8	ug/m3	EPA TO-15	
1,3,5-Trimethylbenzene	**19**	10	ug/m3	EPA TO-15	
1,2,4-Trimethylbenzene	**22**	10	ug/m3	EPA TO-15	

Sample ID: **SS3** Laboratory ID: **E510066-03**

Analyte	Result	Reporting Limit	Units	Method	Notes
Toluene	**48**	3.8	ug/m3	EPA TO-15	
Ethylbenzene	**5.0**	4.4	ug/m3	EPA TO-15	QL-1L
m,p-Xylene	**14**	8.8	ug/m3	EPA TO-15	
o-Xylene	**8.1**	4.4	ug/m3	EPA TO-15	
1,2,4-Trimethylbenzene	**6.9**	5.0	ug/m3	EPA TO-15	

Sample ID: **SS12** Laboratory ID: **E510066-04**

Analyte	Result	Reporting Limit	Units	Method	Notes
Benzene	**28**	3.2	ug/m3	EPA TO-15	
Toluene	**56**	3.8	ug/m3	EPA TO-15	
Tetrachloroethene	**8.3**	6.9	ug/m3	EPA TO-15	
Ethylbenzene	**11**	4.4	ug/m3	EPA TO-15	QL-1L
m,p-Xylene	**42**	8.8	ug/m3	EPA TO-15	
o-Xylene	**18**	4.4	ug/m3	EPA TO-15	
4-Ethyltoluene	**7.3**	5.0	ug/m3	EPA TO-15	
1,3,5-Trimethylbenzene	**15**	5.0	ug/m3	EPA TO-15	
1,2,4-Trimethylbenzene	**36**	5.0	ug/m3	EPA TO-15	

H&P Mobile
Geochemistry Inc.

2470 Impala Drive
Carlsbad, CA 92010
760-804-9678 Phone
760-804-9159 Fax

Atlas Geo-Sampling Company	Project:	AG100615-15 Rev	
120 Nottaway Lane	Project Number:	Terracon Moundville	Reported:
Alpharetta, GA 30009	Project Manager:	Mr. Jim Fineis	19-Feb-16 13:05

Sample ID: **SS6** Laboratory ID: **E510066-05**

Analyte	Result	Reporting Limit	Units	Method	Notes
Chloromethane	**2.6**	2.1	ug/m3	EPA TO-15	
Acetone	**81**	24	ug/m3	EPA TO-15	
Chloroform	**5.2**	4.9	ug/m3	EPA TO-15	
1,2-Dichloroethane (EDC)	**7.2**	4.1	ug/m3	EPA TO-15	
Toluene	**15**	3.8	ug/m3	EPA TO-15	
m,p-Xylene	**13**	8.8	ug/m3	EPA TO-15	
Styrene	**6.5**	4.3	ug/m3	EPA TO-15	
o-Xylene	**5.2**	4.4	ug/m3	EPA TO-15	
1,2,4-Trimethylbenzene	**8.9**	5.0	ug/m3	EPA TO-15	

Sample ID: **SS5** Laboratory ID: **E510066-06**

Analyte	Result	Reporting Limit	Units	Method	Notes
Benzene	**42**	6.5	ug/m3	EPA TO-15	
Toluene	**37**	7.6	ug/m3	EPA TO-15	
Tetrachloroethene	**32**	14	ug/m3	EPA TO-15	
Ethylbenzene	**76**	8.8	ug/m3	EPA TO-15	QL-1L
m,p-Xylene	**150**	18	ug/m3	EPA TO-15	
Styrene	**12**	8.6	ug/m3	EPA TO-15	
o-Xylene	**160**	8.8	ug/m3	EPA TO-15	
4-Ethyltoluene	**130**	10	ug/m3	EPA TO-15	
1,3,5-Trimethylbenzene	**63**	10	ug/m3	EPA TO-15	
1,2,4-Trimethylbenzene	**270**	10	ug/m3	EPA TO-15	

Sample ID: **SS7** Laboratory ID: **E510066-07**

Analyte	Result	Reporting Limit	Units	Method	Notes
Benzene	**110**	100	ug/m3	H&P 8260SV	
Ethylbenzene	**2400**	500	ug/m3	H&P 8260SV	
m,p-Xylene	**7800**	500	ug/m3	H&P 8260SV	
o-Xylene	**12000**	500	ug/m3	H&P 8260SV	
1,3,5-Trimethylbenzene	**27000**	500	ug/m3	H&P 8260SV	
1,2,4-Trimethylbenzene	**56000**	500	ug/m3	H&P 8260SV	
Naphthalene	**110**	100	ug/m3	H&P 8260SV	

Sample ID: **SS8** Laboratory ID: **E510066-08**

Analyte	Result	Reporting Limit	Units	Method	Notes
Benzene	**1700**	100	ug/m3	H&P 8260SV	

H&P Mobile
Geochemistry Inc.

2470 Impala Drive
Carlsbad, CA 92010
760-804-9678 Phone
760-804-9159 Fax

Atlas Geo-Sampling Company	Project: AG100615-15 Rev	
120 Nottaway Lane	Project Number: Terracon Moundville	Reported:
Alpharetta, GA 30009	Project Manager: Mr. Jim Fineis	19-Feb-16 13:05

Sample ID: **SS8** Laboratory ID: **E510066-08**

Analyte	Result	Reporting Limit	Units	Method	Notes
Trichloroethene	**170**	100	ug/m3	H&P 8260SV	
Ethylbenzene	**3600**	500	ug/m3	H&P 8260SV	
m,p-Xylene	**5500**	500	ug/m3	H&P 8260SV	
o-Xylene	**12000**	500	ug/m3	H&P 8260SV	
1,3,5-Trimethylbenzene	**29000**	500	ug/m3	H&P 8260SV	
1,2,4-Trimethylbenzene	**54000**	500	ug/m3	H&P 8260SV	
Naphthalene	**210**	100	ug/m3	H&P 8260SV	

Sample ID: **SS9** Laboratory ID: **E510066-09**

Analyte	Result	Reporting Limit	Units	Method	Notes
Benzene	**1100**	1000	ug/m3	H&P 8260SV	
Toluene	**12000**	10000	ug/m3	H&P 8260SV	
Ethylbenzene	**510000**	5000	ug/m3	H&P 8260SV	
m,p-Xylene	**510000**	5000	ug/m3	H&P 8260SV	
o-Xylene	**66000**	5000	ug/m3	H&P 8260SV	
1,3,5-Trimethylbenzene	**21000**	5000	ug/m3	H&P 8260SV	
1,2,4-Trimethylbenzene	**100000**	5000	ug/m3	H&P 8260SV	

Sample ID: **SS11** Laboratory ID: **E510066-10**

Analyte	Result	Reporting Limit	Units	Method	Notes
1,1-Dichloroethane	**2900**	500	ug/m3	H&P 8260SV	
Benzene	**3800**	100	ug/m3	H&P 8260SV	
Toluene	**26000**	1000	ug/m3	H&P 8260SV	
Ethylbenzene	**9800**	500	ug/m3	H&P 8260SV	
m,p-Xylene	**17000**	500	ug/m3	H&P 8260SV	
o-Xylene	**18000**	500	ug/m3	H&P 8260SV	
1,3,5-Trimethylbenzene	**13000**	500	ug/m3	H&P 8260SV	
1,2,4-Trimethylbenzene	**21000**	500	ug/m3	H&P 8260SV	
Naphthalene	**100**	100	ug/m3	H&P 8260SV	

Sample ID: **SS4** Laboratory ID: **E510067-01**

Analyte	Result	Reporting Limit	Units	Method	Notes
Acetone	**33**	24	ug/m3	EPA TO-15	
Toluene	**18**	3.8	ug/m3	EPA TO-15	
Tetrachloroethene	**18**	6.9	ug/m3	EPA TO-15	
Ethylbenzene	**4.5**	4.4	ug/m3	EPA TO-15	QL-1L

H&P Mobile
Geochemistry Inc.

2470 Impala Drive
Carlsbad, CA 92010
760-804-9678 Phone
760-804-9159 Fax

Atlas Geo-Sampling Company	Project:	AG100615-15 Rev	
120 Nottaway Lane	Project Number:	Terracon Moundville	Reported:
Alpharetta, GA 30009	Project Manager:	Mr. Jim Fineis	19-Feb-16 13:05

Sample ID: **SS4** Laboratory ID: **E510067-01**

Analyte	Result	Reporting Limit	Units	Method	Notes
m,p-Xylene	**13**	8.8	ug/m3	EPA TO-15	
o-Xylene	**5.5**	4.4	ug/m3	EPA TO-15	
1,2,4-Trimethylbenzene	**5.6**	5.0	ug/m3	EPA TO-15	

Sample ID: **SS13** Laboratory ID: **E510067-02**

Analyte	Result	Reporting Limit	Units	Method	Notes
Chloromethane	**2.2**	2.1	ug/m3	EPA TO-15	
Acetone	**180**	24	ug/m3	EPA TO-15	
Methylene chloride (Dichloromethane)	**4.1**	3.5	ug/m3	EPA TO-15	
2-Butanone (MEK)	**31**	30	ug/m3	EPA TO-15	
Benzene	**8.2**	3.2	ug/m3	EPA TO-15	
4-Methyl-2-pentanone (MIBK)	**9.5**	8.3	ug/m3	EPA TO-15	
Toluene	**110**	3.8	ug/m3	EPA TO-15	
Ethylbenzene	**9.3**	4.4	ug/m3	EPA TO-15	QL-1L
m,p-Xylene	**69**	8.8	ug/m3	EPA TO-15	
Styrene	**5.7**	4.3	ug/m3	EPA TO-15	
o-Xylene	**24**	4.4	ug/m3	EPA TO-15	
4-Ethyltoluene	**11**	5.0	ug/m3	EPA TO-15	
1,3,5-Trimethylbenzene	**28**	5.0	ug/m3	EPA TO-15	
1,2,4-Trimethylbenzene	**70**	5.0	ug/m3	EPA TO-15	

Sample ID: **SS14** Laboratory ID: **E510067-03**

Analyte	Result	Reporting Limit	Units	Method	Notes
Toluene	**34**	3.8	ug/m3	EPA TO-15	
Ethylbenzene	**6.1**	4.4	ug/m3	EPA TO-15	QL-1L
m,p-Xylene	**21**	8.8	ug/m3	EPA TO-15	
Styrene	**6.6**	4.3	ug/m3	EPA TO-15	
o-Xylene	**7.6**	4.4	ug/m3	EPA TO-15	
1,2,4-Trimethylbenzene	**12**	5.0	ug/m3	EPA TO-15	
Naphthalene	**5.4**	5.3	ug/m3	EPA TO-15	

H&P Mobile
Geochemistry Inc.

2470 Impala Drive
Carlsbad, CA 92010
760-804-9678 Phone
760-804-9159 Fax

Atlas Geo-Sampling Company	Project: AG100615-15 Rev	
120 Nottaway Lane	Project Number: Terracon Moundville	Reported:
Alpharetta, GA 30009	Project Manager: Mr. Jim Fineis	19-Feb-16 13:05

Organic Compounds by H&P TO-17

H&P Mobile Geochemistry, Inc.

Analyte	Result	Reporting Limit	Units	Dilution Factor	Batch	Prepared	Analyzed	Method	Notes
SS1 (240) (E510048-02) Vapor Sampled: 01-Oct-15 Received: 06-Oct-15									
Dicyclopentadiene	**4100**	420	ug/m3	20	EJ51310	12-Oct-15	12-Oct-15	H&P TO-17	
Surrogate: Toluene-d8		*102 %*	*75-125*		"	"	"	"	
Surrogate: 4-Bromofluorobenzene		*94.4 %*	*75-125*		"	"	"	"	
SS2 (240) (E510048-04) Vapor Sampled: 01-Oct-15 Received: 06-Oct-15									
Dicyclopentadiene	**37000**	420	ug/m3	20	EJ51310	12-Oct-15	12-Oct-15	H&P TO-17	E
Surrogate: Toluene-d8		*104 %*	*75-125*		"	"	"	"	
Surrogate: 4-Bromofluorobenzene		*95.8 %*	*75-125*		"	"	"	"	
SS3 (1200) (E510048-05) Vapor Sampled: 01-Oct-15 Received: 06-Oct-15									
Dicyclopentadiene	**46**	4.2	ug/m3	1	EJ51309	09-Oct-15	09-Oct-15	H&P TO-17	
Surrogate: Toluene-d8		*109 %*	*75-125*		"	"	"	"	
Surrogate: 4-Bromofluorobenzene		*96.1 %*	*75-125*		"	"	"	"	
SS4 (1200) (E510048-07) Vapor Sampled: 01-Oct-15 Received: 06-Oct-15									
Dicyclopentadiene	**5.2**	4.2	ug/m3	1	EJ51309	09-Oct-15	09-Oct-15	H&P TO-17	
Surrogate: Toluene-d8		*109 %*	*75-125*		"	"	"	"	
Surrogate: 4-Bromofluorobenzene		*96.8 %*	*75-125*		"	"	"	"	
SS12 (1200) (E510048-09) Vapor Sampled: 01-Oct-15 Received: 06-Oct-15									
Dicyclopentadiene	**6.3**	4.2	ug/m3	1	EJ51309	09-Oct-15	09-Oct-15	H&P TO-17	
Surrogate: Toluene-d8		*103 %*	*75-125*		"	"	"	"	
Surrogate: 4-Bromofluorobenzene		*98.2 %*	*75-125*		"	"	"	"	
SS13 (1200) (E510048-11) Vapor Sampled: 01-Oct-15 Received: 06-Oct-15									
Dicyclopentadiene	ND	4.2	ug/m3	1	EJ51309	09-Oct-15	09-Oct-15	H&P TO-17	
Surrogate: Toluene-d8		*106 %*	*75-125*		"	"	"	"	
Surrogate: 4-Bromofluorobenzene		*96.9 %*	*75-125*		"	"	"	"	

H&P Mobile
Geochemistry Inc.

2470 Impala Drive
Carlsbad, CA 92010
760-804-9678 Phone
760-804-9159 Fax

Atlas Geo-Sampling Company	Project: AG100615-15 Rev	
120 Nottaway Lane	Project Number: Terracon Moundville	Reported:
Alpharetta, GA 30009	Project Manager: Mr. Jim Fineis	19-Feb-16 13:05

Organic Compounds by H&P TO-17

H&P Mobile Geochemistry, Inc.

Analyte	Result	Reporting Limit	Units	Dilution Factor	Batch	Prepared	Analyzed	Method	Notes
SS14 (1200) (E510048-13) Vapor Sampled: 01-Oct-15 Received: 06-Oct-15									
Dicyclopentadiene	ND	4.2	ug/m3	1	EJ51309	09-Oct-15	09-Oct-15	H&P TO-17	
Surrogate: Toluene-d8		*107 %*	*75-125*		"	"	"	"	
Surrogate: 4-Bromofluorobenzene		*96.4 %*	*75-125*		"	"	"	"	
SS6 (1200) (E510048-15) Vapor Sampled: 01-Oct-15 Received: 06-Oct-15									
Dicyclopentadiene	ND	4.2	ug/m3	1	EJ51309	09-Oct-15	09-Oct-15	H&P TO-17	
Surrogate: Toluene-d8		*106 %*	*75-125*		"	"	"	"	
Surrogate: 4-Bromofluorobenzene		*97.1 %*	*75-125*		"	"	"	"	
SS5 (240) (E510048-18) Vapor Sampled: 01-Oct-15 Received: 06-Oct-15									
Dicyclopentadiene	**1200**	420	ug/m3	20	EJ51310	12-Oct-15	12-Oct-15	H&P TO-17	
Surrogate: Toluene-d8		*114 %*	*75-125*		"	"	"	"	
Surrogate: 4-Bromofluorobenzene		*92.3 %*	*75-125*		"	"	"	"	
SS7 (240) (E510048-20) Vapor Sampled: 01-Oct-15 Received: 06-Oct-15									
Dicyclopentadiene	**89000**	4200	ug/m3	200	EJ51310	12-Oct-15	12-Oct-15	H&P TO-17	E
Surrogate: Toluene-d8		*115 %*	*75-125*		"	"	"	"	
Surrogate: 4-Bromofluorobenzene		*106 %*	*75-125*		"	"	"	"	
SS8 (240) (E510048-22) Vapor Sampled: 01-Oct-15 Received: 06-Oct-15									
Dicyclopentadiene	**40000**	4200	ug/m3	200	EJ51310	12-Oct-15	12-Oct-15	H&P TO-17	E
Surrogate: Toluene-d8		*107 %*	*75-125*		"	"	"	"	
Surrogate: 4-Bromofluorobenzene		*103 %*	*75-125*		"	"	"	"	
SS9 (240) (E510048-24) Vapor Sampled: 01-Oct-15 Received: 06-Oct-15									
Dicyclopentadiene	**63000**	4200	ug/m3	200	EJ51310	12-Oct-15	12-Oct-15	H&P TO-17	E
Surrogate: Toluene-d8		*85.8 %*	*75-125*		"	"	"	"	
Surrogate: 4-Bromofluorobenzene		*107 %*	*75-125*		"	"	"	"	

H&P Mobile
Geochemistry Inc.

2470 Impala Drive
Carlsbad, CA 92010
760-804-9678 Phone
760-804-9159 Fax

Atlas Geo-Sampling Company	Project: AG100615-15 Rev	
120 Nottaway Lane	Project Number: Terracon Moundville	Reported:
Alpharetta, GA 30009	Project Manager: Mr. Jim Fineis	19-Feb-16 13:05

Organic Compounds by H&P TO-17

H&P Mobile Geochemistry, Inc.

Analyte	Result	Reporting Limit	Units	Dilution Factor	Batch	Prepared	Analyzed	Method	Notes
SS11 (240) (E510048-26) Vapor Sampled: 01-Oct-15 Received: 06-Oct-15									
Dicyclopentadiene	**48000**	4200	ug/m3	200	EJ51310	12-Oct-15	12-Oct-15	H&P TO-17	E
Surrogate: Toluene-d8		*90.5 %*	*75-125*		"	"	"	"	
Surrogate: 4-Bromofluorobenzene		*104 %*	*75-125*		"	"	"	"	
Trip Blank (E510048-27) Vapor Sampled: 01-Oct-15 Received: 06-Oct-15									
Dicyclopentadiene	ND	4.2	ug/m3	1	EJ51309	09-Oct-15	09-Oct-15	H&P TO-17	
Surrogate: Toluene-d8		*109 %*	*75-125*		"	"	"	"	
Surrogate: 4-Bromofluorobenzene		*96.8 %*	*75-125*		"	"	"	"	

H&P Mobile
Geochemistry Inc.

2470 Impala Drive
Carlsbad, CA 92010
760-804-9678 Phone
760-804-9159 Fax

Atlas Geo-Sampling Company	Project:	AG100615-15 Rev	
120 Nottaway Lane	Project Number:	Terracon Moundville	Reported:
Alpharetta, GA 30009	Project Manager:	Mr. Jim Fineis	19-Feb-16 13:05

Volatile Organic Compounds by EPA TO-15

H&P Mobile Geochemistry, Inc.

Analyte	Result	Reporting Limit	Units	Dilution Factor	Batch	Prepared	Analyzed	Method	Notes
SS1 (E510066-01) Vapor Sampled: 01-Oct-15 Received: 06-Oct-15									
Dichlorodifluoromethane (F12)	ND	5.0	ug/m3	1	EJ51504	14-Oct-15	15-Oct-15	EPA TO-15	
Chloromethane	ND	2.1	"	"	"	"	"	"	
Dichlorotetrafluoroethane (F114)	ND	7.1	"	"	"	"	"	"	
Vinyl chloride	ND	2.6	"	"	"	"	"	"	
Bromomethane	ND	16	"	"	"	"	"	"	
Chloroethane	ND	8.0	"	"	"	"	"	"	
Trichlorofluoromethane (F11)	ND	5.6	"	"	"	"	"	"	
Acetone	**320**	24	"	"	"	"	"	"	
1,1-Dichloroethene	ND	4.0	"	"	"	"	"	"	
1,1,2-Trichlorotrifluoroethane (F113)	ND	7.7	"	"	"	"	"	"	
Methylene chloride (Dichloromethane)	ND	3.5	"	"	"	"	"	"	
Carbon disulfide	ND	6.3	"	"	"	"	"	"	
trans-1,2-Dichloroethene	ND	8.0	"	"	"	"	"	"	
1,1-Dichloroethane	ND	4.1	"	"	"	"	"	"	
2-Butanone (MEK)	**96**	30	"	"	"	"	"	"	
cis-1,2-Dichloroethene	ND	4.0	"	"	"	"	"	"	
Chloroform	ND	4.9	"	"	"	"	"	"	
1,1,1-Trichloroethane	ND	5.5	"	"	"	"	"	"	
1,2-Dichloroethane (EDC)	ND	4.1	"	"	"	"	"	"	
Benzene	**33**	3.2	"	"	"	"	"	"	
Carbon tetrachloride	ND	6.4	"	"	"	"	"	"	
Trichloroethene	**6.1**	5.5	"	"	"	"	"	"	
1,2-Dichloropropane	ND	9.4	"	"	"	"	"	"	
Bromodichloromethane	ND	6.8	"	"	"	"	"	"	
cis-1,3-Dichloropropene	ND	4.6	"	"	"	"	"	"	
4-Methyl-2-pentanone (MIBK)	**24**	8.3	"	"	"	"	"	"	
trans-1,3-Dichloropropene	ND	4.6	"	"	"	"	"	"	
Toluene	**58**	3.8	"	"	"	"	"	"	
1,1,2-Trichloroethane	ND	5.5	"	"	"	"	"	"	
2-Hexanone (MBK)	ND	8.3	"	"	"	"	"	"	
Dibromochloromethane	ND	8.6	"	"	"	"	"	"	
Tetrachloroethene	ND	6.9	"	"	"	"	"	"	
1,2-Dibromoethane (EDB)	ND	7.8	"	"	"	"	"	"	
1,1,1,2-Tetrachloroethane	ND	7.0	"	"	"	"	"	"	
Chlorobenzene	ND	4.7	"	"	"	"	"	"	
Ethylbenzene	**7.1**	4.4	"	"	"	"	"	"	QL-1L
m,p-Xylene	**25**	8.8	"	"	"	"	"	"	
Styrene	ND	4.3	"	"	"	"	"	"	

H&P Mobile
Geochemistry Inc.

2470 Impala Drive
Carlsbad, CA 92010
760-804-9678 Phone
760-804-9159 Fax

Atlas Geo-Sampling Company	Project:	AG100615-15 Rev	
120 Nottaway Lane	Project Number:	Terracon Moundville	Reported:
Alpharetta, GA 30009	Project Manager:	Mr. Jim Fineis	19-Feb-16 13:05

Volatile Organic Compounds by EPA TO-15

H&P Mobile Geochemistry, Inc.

Analyte	Result	Reporting Limit	Units	Dilution Factor	Batch	Prepared	Analyzed	Method	Notes
SS1 (E510066-01) Vapor Sampled: 01-Oct-15 Received: 06-Oct-15									
o-Xylene	**9.3**	4.4	ug/m3	1	EJ51504	14-Oct-15	15-Oct-15	EPA TO-15	
Bromoform	ND	10	"	"	"	"	"	"	
1,1,2,2-Tetrachloroethane	ND	7.0	"	"	"	"	"	"	
4-Ethyltoluene	ND	5.0	"	"	"	"	"	"	
1,3,5-Trimethylbenzene	ND	5.0	"	"	"	"	"	"	
1,2,4-Trimethylbenzene	**8.9**	5.0	"	"	"	"	"	"	
1,3-Dichlorobenzene	ND	12	"	"	"	"	"	"	
1,4-Dichlorobenzene	ND	12	"	"	"	"	"	"	
1,2-Dichlorobenzene	ND	12	"	"	"	"	"	"	
Naphthalene	ND	5.3	"	"	"	"	"	"	
1,2,4-Trichlorobenzene	ND	38	"	"	"	"	"	"	
Hexachlorobutadiene	ND	54	"	"	"	"	"	"	
Surrogate: 1,2-Dichloroethane-d4		*119 %*	*76-134*		"	"	"	"	
Surrogate: Toluene-d8		*102 %*	*78-125*		"	"	"	"	
Surrogate: 4-Bromofluorobenzene		*90.2 %*	*77-127*		"	"	"	"	
SS2 (E510066-02) Vapor Sampled: 01-Oct-15 Received: 06-Oct-15									
Dichlorodifluoromethane (F12)	ND	10	ug/m3	2	EJ51504	14-Oct-15	15-Oct-15	EPA TO-15	
Chloromethane	ND	4.1	"	"	"	"	"	"	
Dichlorotetrafluoroethane (F114)	ND	14	"	"	"	"	"	"	
Vinyl chloride	ND	5.2	"	"	"	"	"	"	
Bromomethane	ND	32	"	"	"	"	"	"	
Chloroethane	ND	16	"	"	"	"	"	"	
Trichlorofluoromethane (F11)	ND	11	"	"	"	"	"	"	
Acetone	ND	48	"	"	"	"	"	"	
1,1-Dichloroethene	ND	8.0	"	"	"	"	"	"	
1,1,2-Trichlorotrifluoroethane (F113)	ND	15	"	"	"	"	"	"	
Methylene chloride (Dichloromethane)	**7.8**	7.1	"	"	"	"	"	"	
Carbon disulfide	ND	13	"	"	"	"	"	"	
trans-1,2-Dichloroethene	ND	16	"	"	"	"	"	"	
1,1-Dichloroethane	ND	8.2	"	"	"	"	"	"	
2-Butanone (MEK)	**93**	60	"	"	"	"	"	"	
cis-1,2-Dichloroethene	ND	8.0	"	"	"	"	"	"	
Chloroform	ND	9.9	"	"	"	"	"	"	
1,1,1-Trichloroethane	ND	11	"	"	"	"	"	"	
1,2-Dichloroethane (EDC)	ND	8.2	"	"	"	"	"	"	
Benzene	**57**	6.5	"	"	"	"	"	"	

H&P Mobile
Geochemistry Inc.

2470 Impala Drive
Carlsbad, CA 92010
760-804-9678 Phone
760-804-9159 Fax

Atlas Geo-Sampling Company	Project:	AG100615-15 Rev	
120 Nottaway Lane	Project Number:	Terracon Moundville	Reported:
Alpharetta, GA 30009	Project Manager:	Mr. Jim Fineis	19-Feb-16 13:05

Volatile Organic Compounds by EPA TO-15

H&P Mobile Geochemistry, Inc.

Analyte	Result	Reporting Limit	Units	Dilution Factor	Batch	Prepared	Analyzed	Method	Notes
SS2 (E510066-02) Vapor Sampled: 01-Oct-15 Received: 06-Oct-15									
Carbon tetrachloride	ND	13	ug/m3	2	EJ51504	14-Oct-15	15-Oct-15	EPA TO-15	
Trichloroethene	ND	11	"	"	"	"	"	"	
1,2-Dichloropropane	ND	19	"	"	"	"	"	"	
Bromodichloromethane	ND	14	"	"	"	"	"	"	
cis-1,3-Dichloropropene	ND	9.2	"	"	"	"	"	"	
4-Methyl-2-pentanone (MIBK)	**37**	17	"	"	"	"	"	"	
trans-1,3-Dichloropropene	ND	9.2	"	"	"	"	"	"	
Toluene	**42**	7.6	"	"	"	"	"	"	
1,1,2-Trichloroethane	ND	11	"	"	"	"	"	"	
2-Hexanone (MBK)	ND	17	"	"	"	"	"	"	
Dibromochloromethane	ND	17	"	"	"	"	"	"	
Tetrachloroethene	ND	14	"	"	"	"	"	"	
1,2-Dibromoethane (EDB)	ND	16	"	"	"	"	"	"	
1,1,1,2-Tetrachloroethane	ND	14	"	"	"	"	"	"	
Chlorobenzene	ND	9.4	"	"	"	"	"	"	
Ethylbenzene	**17**	8.8	"	"	"	"	"	"	QL-1L
m,p-Xylene	**80**	18	"	"	"	"	"	"	
Styrene	ND	8.6	"	"	"	"	"	"	
o-Xylene	**31**	8.8	"	"	"	"	"	"	
Bromoform	ND	21	"	"	"	"	"	"	
1,1,2,2-Tetrachloroethane	ND	14	"	"	"	"	"	"	
4-Ethyltoluene	ND	10	"	"	"	"	"	"	
1,3,5-Trimethylbenzene	**19**	10	"	"	"	"	"	"	
1,2,4-Trimethylbenzene	**22**	10	"	"	"	"	"	"	
1,3-Dichlorobenzene	ND	24	"	"	"	"	"	"	
1,4-Dichlorobenzene	ND	24	"	"	"	"	"	"	
1,2-Dichlorobenzene	ND	24	"	"	"	"	"	"	
Naphthalene	ND	11	"	"	"	"	"	"	
1,2,4-Trichlorobenzene	ND	75	"	"	"	"	"	"	
Hexachlorobutadiene	ND	110	"	"	"	"	"	"	
Surrogate: 1,2-Dichloroethane-d4		*111 %*		*76-134*	"	"	"	"	
Surrogate: Toluene-d8		*103 %*		*78-125*	"	"	"	"	
Surrogate: 4-Bromofluorobenzene		*97.7 %*		*77-127*	"	"	"	"	

H&P Mobile
Geochemistry Inc.

2470 Impala Drive
Carlsbad, CA 92010
760-804-9678 Phone
760-804-9159 Fax

Atlas Geo-Sampling Company	Project:	AG100615-15 Rev	
120 Nottaway Lane	Project Number:	Terracon Moundville	Reported:
Alpharetta, GA 30009	Project Manager:	Mr. Jim Fineis	19-Feb-16 13:05

Volatile Organic Compounds by EPA TO-15

H&P Mobile Geochemistry, Inc.

Analyte	Result	Reporting Limit	Units	Dilution Factor	Batch	Prepared	Analyzed	Method	Notes
SS3 (E510066-03) Vapor Sampled: 01-Oct-15 Received: 06-Oct-15									
Dichlorodifluoromethane (F12)	ND	5.0	ug/m3	1	EJ51504	14-Oct-15	15-Oct-15	EPA TO-15	
Chloromethane	ND	2.1	"	"	"	"	"	"	
Dichlorotetrafluoroethane (F114)	ND	7.1	"	"	"	"	"	"	
Vinyl chloride	ND	2.6	"	"	"	"	"	"	
Bromomethane	ND	16	"	"	"	"	"	"	
Chloroethane	ND	8.0	"	"	"	"	"	"	
Trichlorofluoromethane (F11)	ND	5.6	"	"	"	"	"	"	
Acetone	ND	24	"	"	"	"	"	"	
1,1-Dichloroethene	ND	4.0	"	"	"	"	"	"	
1,1,2-Trichlorotrifluoroethane (F113)	ND	7.7	"	"	"	"	"	"	
Methylene chloride (Dichloromethane)	ND	3.5	"	"	"	"	"	"	
Carbon disulfide	ND	6.3	"	"	"	"	"	"	
trans-1,2-Dichloroethene	ND	8.0	"	"	"	"	"	"	
1,1-Dichloroethane	ND	4.1	"	"	"	"	"	"	
2-Butanone (MEK)	ND	30	"	"	"	"	"	"	
cis-1,2-Dichloroethene	ND	4.0	"	"	"	"	"	"	
Chloroform	ND	4.9	"	"	"	"	"	"	
1,1,1-Trichloroethane	ND	5.5	"	"	"	"	"	"	
1,2-Dichloroethane (EDC)	ND	4.1	"	"	"	"	"	"	
Benzene	ND	3.2	"	"	"	"	"	"	
Carbon tetrachloride	ND	6.4	"	"	"	"	"	"	
Trichloroethene	ND	5.5	"	"	"	"	"	"	
1,2-Dichloropropane	ND	9.4	"	"	"	"	"	"	
Bromodichloromethane	ND	6.8	"	"	"	"	"	"	
cis-1,3-Dichloropropene	ND	4.6	"	"	"	"	"	"	
4-Methyl-2-pentanone (MIBK)	ND	8.3	"	"	"	"	"	"	
trans-1,3-Dichloropropene	ND	4.6	"	"	"	"	"	"	
Toluene	**48**	3.8	"	"	"	"	"	"	
1,1,2-Trichloroethane	ND	5.5	"	"	"	"	"	"	
2-Hexanone (MBK)	ND	8.3	"	"	"	"	"	"	
Dibromochloromethane	ND	8.6	"	"	"	"	"	"	
Tetrachloroethene	ND	6.9	"	"	"	"	"	"	
1,2-Dibromoethane (EDB)	ND	7.8	"	"	"	"	"	"	
1,1,1,2-Tetrachloroethane	ND	7.0	"	"	"	"	"	"	
Chlorobenzene	ND	4.7	"	"	"	"	"	"	
Ethylbenzene	**5.0**	4.4	"	"	"	"	"	"	QL-1L
m,p-Xylene	**14**	8.8	"	"	"	"	"	"	
Styrene	ND	4.3	"	"	"	"	"	"	

H&P Mobile
Geochemistry Inc.

2470 Impala Drive
Carlsbad, CA 92010
760-804-9678 Phone
760-804-9159 Fax

Atlas Geo-Sampling Company	Project:	AG100615-15 Rev	
120 Nottaway Lane	Project Number:	Terracon Moundville	Reported:
Alpharetta, GA 30009	Project Manager:	Mr. Jim Fineis	19-Feb-16 13:05

Volatile Organic Compounds by EPA TO-15

H&P Mobile Geochemistry, Inc.

Analyte	Result	Reporting Limit	Units	Dilution Factor	Batch	Prepared	Analyzed	Method	Notes
SS3 (E510066-03) Vapor Sampled: 01-Oct-15 Received: 06-Oct-15									
o-Xylene	**8.1**	4.4	ug/m3	1	EJ51504	14-Oct-15	15-Oct-15	EPA TO-15	
Bromoform	ND	10	"	"	"	"	"	"	
1,1,2,2-Tetrachloroethane	ND	7.0	"	"	"	"	"	"	
4-Ethyltoluene	ND	5.0	"	"	"	"	"	"	
1,3,5-Trimethylbenzene	ND	5.0	"	"	"	"	"	"	
1,2,4-Trimethylbenzene	**6.9**	5.0	"	"	"	"	"	"	
1,3-Dichlorobenzene	ND	12	"	"	"	"	"	"	
1,4-Dichlorobenzene	ND	12	"	"	"	"	"	"	
1,2-Dichlorobenzene	ND	12	"	"	"	"	"	"	
Naphthalene	ND	5.3	"	"	"	"	"	"	
1,2,4-Trichlorobenzene	ND	38	"	"	"	"	"	"	
Hexachlorobutadiene	ND	54	"	"	"	"	"	"	
Surrogate: 1,2-Dichloroethane-d4		*103 %*	*76-134*		"	"	"	"	
Surrogate: Toluene-d8		*102 %*	*78-125*		"	"	"	"	
Surrogate: 4-Bromofluorobenzene		*101 %*	*77-127*		"	"	"	"	
SS12 (E510066-04) Vapor Sampled: 01-Oct-15 Received: 06-Oct-15									
1,2,3-Trimethylbenzene	ND	5.0	ug/m3	1	EJ51504	14-Oct-15	15-Oct-15	EPA TO-15	TIC
Dichlorodifluoromethane (F12)	ND	5.0	"	"	"	"	"	"	
Chloromethane	ND	2.1	"	"	"	"	"	"	
Dichlorotetrafluoroethane (F114)	ND	7.1	"	"	"	"	"	"	
Vinyl chloride	ND	2.6	"	"	"	"	"	"	
Bromomethane	ND	16	"	"	"	"	"	"	
Chloroethane	ND	8.0	"	"	"	"	"	"	
Trichlorofluoromethane (F11)	ND	5.6	"	"	"	"	"	"	
Acetone	ND	24	"	"	"	"	"	"	
1,1-Dichloroethene	ND	4.0	"	"	"	"	"	"	
1,1,2-Trichlorotrifluoroethane (F113)	ND	7.7	"	"	"	"	"	"	
Methylene chloride (Dichloromethane)	ND	3.5	"	"	"	"	"	"	
Carbon disulfide	ND	6.3	"	"	"	"	"	"	
trans-1,2-Dichloroethene	ND	8.0	"	"	"	"	"	"	
1,1-Dichloroethane	ND	4.1	"	"	"	"	"	"	
2-Butanone (MEK)	ND	30	"	"	"	"	"	"	
cis-1,2-Dichloroethene	ND	4.0	"	"	"	"	"	"	
Chloroform	ND	4.9	"	"	"	"	"	"	
1,1,1-Trichloroethane	ND	5.5	"	"	"	"	"	"	
1,2-Dichloroethane (EDC)	ND	4.1	"	"	"	"	"	"	

H&P Mobile
Geochemistry Inc.

2470 Impala Drive
Carlsbad, CA 92010
760-804-9678 Phone
760-804-9159 Fax

Atlas Geo-Sampling Company	Project:	AG100615-15 Rev	
120 Nottaway Lane	Project Number:	Terracon Moundville	Reported:
Alpharetta, GA 30009	Project Manager:	Mr. Jim Fineis	19-Feb-16 13:05

Volatile Organic Compounds by EPA TO-15

H&P Mobile Geochemistry, Inc.

Analyte	Result	Reporting Limit	Units	Dilution Factor	Batch	Prepared	Analyzed	Method	Notes
SS12 (E510066-04) Vapor Sampled: 01-Oct-15 Received: 06-Oct-15									
Benzene	**28**	3.2	ug/m3	1	EJ51504	14-Oct-15	15-Oct-15	EPA TO-15	
Carbon tetrachloride	ND	6.4	"	"	"	"	"	"	
Trichloroethene	ND	5.5	"	"	"	"	"	"	
1,2-Dichloropropane	ND	9.4	"	"	"	"	"	"	
Bromodichloromethane	ND	6.8	"	"	"	"	"	"	
cis-1,3-Dichloropropene	ND	4.6	"	"	"	"	"	"	
4-Methyl-2-pentanone (MIBK)	ND	8.3	"	"	"	"	"	"	
trans-1,3-Dichloropropene	ND	4.6	"	"	"	"	"	"	
Toluene	**56**	3.8	"	"	"	"	"	"	
1,1,2-Trichloroethane	ND	5.5	"	"	"	"	"	"	
2-Hexanone (MBK)	ND	8.3	"	"	"	"	"	"	
Dibromochloromethane	ND	8.6	"	"	"	"	"	"	
Tetrachloroethene	**8.3**	6.9	"	"	"	"	"	"	
1,2-Dibromoethane (EDB)	ND	7.8	"	"	"	"	"	"	
1,1,1,2-Tetrachloroethane	ND	7.0	"	"	"	"	"	"	
Chlorobenzene	ND	4.7	"	"	"	"	"	"	
Ethylbenzene	**11**	4.4	"	"	"	"	"	"	QL-1L
m,p-Xylene	**42**	8.8	"	"	"	"	"	"	
Styrene	ND	4.3	"	"	"	"	"	"	
o-Xylene	**18**	4.4	"	"	"	"	"	"	
Bromoform	ND	10	"	"	"	"	"	"	
1,1,2,2-Tetrachloroethane	ND	7.0	"	"	"	"	"	"	
4-Ethyltoluene	**7.3**	5.0	"	"	"	"	"	"	
1,3,5-Trimethylbenzene	**15**	5.0	"	"	"	"	"	"	
1,2,4-Trimethylbenzene	**36**	5.0	"	"	"	"	"	"	
1,3-Dichlorobenzene	ND	12	"	"	"	"	"	"	
1,4-Dichlorobenzene	ND	12	"	"	"	"	"	"	
1,2-Dichlorobenzene	ND	12	"	"	"	"	"	"	
Naphthalene	ND	5.3	"	"	"	"	"	"	
1,2,4-Trichlorobenzene	ND	38	"	"	"	"	"	"	
Hexachlorobutadiene	ND	54	"	"	"	"	"	"	
Surrogate: 1,2-Dichloroethane-d4		*110 %*		*76-134*	"	"	"	"	
Surrogate: Toluene-d8		*96.1 %*		*78-125*	"	"	"	"	
Surrogate: 4-Bromofluorobenzene		*74.4 %*		*77-127*	"	"	"	"	*S-11*

H&P Mobile
Geochemistry Inc.

2470 Impala Drive
Carlsbad, CA 92010
760-804-9678 Phone
760-804-9159 Fax

Atlas Geo-Sampling Company	Project:	AG100615-15 Rev	
120 Nottaway Lane	Project Number:	Terracon Moundville	Reported:
Alpharetta, GA 30009	Project Manager:	Mr. Jim Fineis	19-Feb-16 13:05

Volatile Organic Compounds by EPA TO-15

H&P Mobile Geochemistry, Inc.

Analyte	Result	Reporting Limit	Units	Dilution Factor	Batch	Prepared	Analyzed	Method	Notes
SS6 (E510066-05) Vapor Sampled: 01-Oct-15 Received: 06-Oct-15									
Dichlorodifluoromethane (F12)	ND	5.0	ug/m3	1	EJ51504	14-Oct-15	15-Oct-15	EPA TO-15	
Chloromethane	**2.6**	2.1	"	"	"	"	"	"	
Dichlorotetrafluoroethane (F114)	ND	7.1	"	"	"	"	"	"	
Vinyl chloride	ND	2.6	"	"	"	"	"	"	
Bromomethane	ND	16	"	"	"	"	"	"	
Chloroethane	ND	8.0	"	"	"	"	"	"	
Trichlorofluoromethane (F11)	ND	5.6	"	"	"	"	"	"	
Acetone	**81**	24	"	"	"	"	"	"	
1,1-Dichloroethene	ND	4.0	"	"	"	"	"	"	
1,1,2-Trichlorotrifluoroethane (F113)	ND	7.7	"	"	"	"	"	"	
Methylene chloride (Dichloromethane)	ND	3.5	"	"	"	"	"	"	
Carbon disulfide	ND	6.3	"	"	"	"	"	"	
trans-1,2-Dichloroethene	ND	8.0	"	"	"	"	"	"	
1,1-Dichloroethane	ND	4.1	"	"	"	"	"	"	
2-Butanone (MEK)	ND	30	"	"	"	"	"	"	
cis-1,2-Dichloroethene	ND	4.0	"	"	"	"	"	"	
Chloroform	**5.2**	4.9	"	"	"	"	"	"	
1,1,1-Trichloroethane	ND	5.5	"	"	"	"	"	"	
1,2-Dichloroethane (EDC)	**7.2**	4.1	"	"	"	"	"	"	
Benzene	ND	3.2	"	"	"	"	"	"	
Carbon tetrachloride	ND	6.4	"	"	"	"	"	"	
Trichloroethene	ND	5.5	"	"	"	"	"	"	
1,2-Dichloropropane	ND	9.4	"	"	"	"	"	"	
Bromodichloromethane	ND	6.8	"	"	"	"	"	"	
cis-1,3-Dichloropropene	ND	4.6	"	"	"	"	"	"	
4-Methyl-2-pentanone (MIBK)	ND	8.3	"	"	"	"	"	"	
trans-1,3-Dichloropropene	ND	4.6	"	"	"	"	"	"	
Toluene	**15**	3.8	"	"	"	"	"	"	
1,1,2-Trichloroethane	ND	5.5	"	"	"	"	"	"	
2-Hexanone (MBK)	ND	8.3	"	"	"	"	"	"	
Dibromochloromethane	ND	8.6	"	"	"	"	"	"	
Tetrachloroethene	ND	6.9	"	"	"	"	"	"	
1,2-Dibromoethane (EDB)	ND	7.8	"	"	"	"	"	"	
1,1,1,2-Tetrachloroethane	ND	7.0	"	"	"	"	"	"	
Chlorobenzene	ND	4.7	"	"	"	"	"	"	
Ethylbenzene	ND	4.4	"	"	"	"	"	"	
m,p-Xylene	**13**	8.8	"	"	"	"	"	"	
Styrene	**6.5**	4.3	"	"	"	"	"	"	

H&P Mobile
Geochemistry Inc.

2470 Impala Drive
Carlsbad, CA 92010
760-804-9678 Phone
760-804-9159 Fax

Atlas Geo-Sampling Company	Project:	AG100615-15 Rev	
120 Nottaway Lane	Project Number:	Terracon Moundville	Reported:
Alpharetta, GA 30009	Project Manager:	Mr. Jim Fineis	19-Feb-16 13:05

Volatile Organic Compounds by EPA TO-15

H&P Mobile Geochemistry, Inc.

Analyte	Result	Reporting Limit	Units	Dilution Factor	Batch	Prepared	Analyzed	Method	Notes
SS6 (E510066-05) Vapor Sampled: 01-Oct-15 Received: 06-Oct-15									
o-Xylene	**5.2**	4.4	ug/m3	1	EJ51504	14-Oct-15	15-Oct-15	EPA TO-15	
Bromoform	ND	10	"	"	"	"	"	"	
1,1,2,2-Tetrachloroethane	ND	7.0	"	"	"	"	"	"	
4-Ethyltoluene	ND	5.0	"	"	"	"	"	"	
1,3,5-Trimethylbenzene	ND	5.0	"	"	"	"	"	"	
1,2,4-Trimethylbenzene	**8.9**	5.0	"	"	"	"	"	"	
1,3-Dichlorobenzene	ND	12	"	"	"	"	"	"	
1,4-Dichlorobenzene	ND	12	"	"	"	"	"	"	
1,2-Dichlorobenzene	ND	12	"	"	"	"	"	"	
Naphthalene	ND	5.3	"	"	"	"	"	"	
1,2,4-Trichlorobenzene	ND	38	"	"	"	"	"	"	
Hexachlorobutadiene	ND	54	"	"	"	"	"	"	
Surrogate: 1,2-Dichloroethane-d4		*107 %*	*76-134*		"	"	"	"	
Surrogate: Toluene-d8		*103 %*	*78-125*		"	"	"	"	
Surrogate: 4-Bromofluorobenzene		*99.9 %*	*77-127*		"	"	"	"	
SS5 (E510066-06) Vapor Sampled: 01-Oct-15 Received: 06-Oct-15									
Dichlorodifluoromethane (F12)	ND	10	ug/m3	2	EJ51504	14-Oct-15	15-Oct-15	EPA TO-15	
Chloromethane	ND	4.1	"	"	"	"	"	"	
Dichlorotetrafluoroethane (F114)	ND	14	"	"	"	"	"	"	
Vinyl chloride	ND	5.2	"	"	"	"	"	"	
Bromomethane	ND	32	"	"	"	"	"	"	
Chloroethane	ND	16	"	"	"	"	"	"	
Trichlorofluoromethane (F11)	ND	11	"	"	"	"	"	"	
Acetone	ND	48	"	"	"	"	"	"	
1,1-Dichloroethene	ND	8.0	"	"	"	"	"	"	
1,1,2-Trichlorotrifluoroethane (F113)	ND	15	"	"	"	"	"	"	
Methylene chloride (Dichloromethane)	ND	7.1	"	"	"	"	"	"	
Carbon disulfide	ND	13	"	"	"	"	"	"	
trans-1,2-Dichloroethene	ND	16	"	"	"	"	"	"	
1,1-Dichloroethane	ND	8.2	"	"	"	"	"	"	
2-Butanone (MEK)	ND	60	"	"	"	"	"	"	
cis-1,2-Dichloroethene	ND	8.0	"	"	"	"	"	"	
Chloroform	ND	9.9	"	"	"	"	"	"	
1,1,1-Trichloroethane	ND	11	"	"	"	"	"	"	
1,2-Dichloroethane (EDC)	ND	8.2	"	"	"	"	"	"	
Benzene	**42**	6.5	"	"	"	"	"	"	

H&P Mobile
Geochemistry Inc.

2470 Impala Drive
Carlsbad, CA 92010
760-804-9678 Phone
760-804-9159 Fax

Atlas Geo-Sampling Company	Project:	AG100615-15 Rev	
120 Nottaway Lane	Project Number:	Terracon Moundville	Reported:
Alpharetta, GA 30009	Project Manager:	Mr. Jim Fineis	19-Feb-16 13:05

Volatile Organic Compounds by EPA TO-15

H&P Mobile Geochemistry, Inc.

Analyte	Result	Reporting Limit	Units	Dilution Factor	Batch	Prepared	Analyzed	Method	Notes
SS5 (E510066-06) Vapor Sampled: 01-Oct-15 Received: 06-Oct-15									
Carbon tetrachloride	ND	13	ug/m3	2	EJ51504	14-Oct-15	15-Oct-15	EPA TO-15	
Trichloroethene	ND	11	"	"	"	"	"	"	
1,2-Dichloropropane	ND	19	"	"	"	"	"	"	
Bromodichloromethane	ND	14	"	"	"	"	"	"	
cis-1,3-Dichloropropene	ND	9.2	"	"	"	"	"	"	
4-Methyl-2-pentanone (MIBK)	ND	17	"	"	"	"	"	"	
trans-1,3-Dichloropropene	ND	9.2	"	"	"	"	"	"	
Toluene	**37**	7.6	"	"	"	"	"	"	
1,1,2-Trichloroethane	ND	11	"	"	"	"	"	"	
2-Hexanone (MBK)	ND	17	"	"	"	"	"	"	
Dibromochloromethane	ND	17	"	"	"	"	"	"	
Tetrachloroethene	**32**	14	"	"	"	"	"	"	
1,2-Dibromoethane (EDB)	ND	16	"	"	"	"	"	"	
1,1,1,2-Tetrachloroethane	ND	14	"	"	"	"	"	"	
Chlorobenzene	ND	9.4	"	"	"	"	"	"	
Ethylbenzene	**76**	8.8	"	"	"	"	"	"	QL-1L
m,p-Xylene	**150**	18	"	"	"	"	"	"	
Styrene	**12**	8.6	"	"	"	"	"	"	
o-Xylene	**160**	8.8	"	"	"	"	"	"	
Bromoform	ND	21	"	"	"	"	"	"	
1,1,2,2-Tetrachloroethane	ND	14	"	"	"	"	"	"	
4-Ethyltoluene	**130**	10	"	"	"	"	"	"	
1,3,5-Trimethylbenzene	**63**	10	"	"	"	"	"	"	
1,2,4-Trimethylbenzene	**270**	10	"	"	"	"	"	"	
1,3-Dichlorobenzene	ND	24	"	"	"	"	"	"	
1,4-Dichlorobenzene	ND	24	"	"	"	"	"	"	
1,2-Dichlorobenzene	ND	24	"	"	"	"	"	"	
Naphthalene	ND	11	"	"	"	"	"	"	
1,2,4-Trichlorobenzene	ND	75	"	"	"	"	"	"	
Hexachlorobutadiene	ND	110	"	"	"	"	"	"	
Surrogate: 1,2-Dichloroethane-d4		*101 %*		*76-134*	"	"	"	"	
Surrogate: Toluene-d8		*107 %*		*78-125*	"	"	"	"	
Surrogate: 4-Bromofluorobenzene		*109 %*		*77-127*	"	"	"	"	

H&P Mobile
Geochemistry Inc.

2470 Impala Drive
Carlsbad, CA 92010
760-804-9678 Phone
760-804-9159 Fax

Atlas Geo-Sampling Company	Project:	AG100615-15 Rev	
120 Nottaway Lane	Project Number:	Terracon Moundville	Reported:
Alpharetta, GA 30009	Project Manager:	Mr. Jim Fineis	19-Feb-16 13:05

Volatile Organic Compounds by EPA TO-15

H&P Mobile Geochemistry, Inc.

Analyte	Result	Reporting Limit	Units	Dilution Factor	Batch	Prepared	Analyzed	Method	Notes
SS4 (E510067-01) Vapor Sampled: 01-Oct-15 Received: 12-Oct-15									
Dichlorodifluoromethane (F12)	ND	5.0	ug/m3	1	EJ51504	14-Oct-15	15-Oct-15	EPA TO-15	
Chloromethane	ND	2.1	"	"	"	"	"	"	
Dichlorotetrafluoroethane (F114)	ND	7.1	"	"	"	"	"	"	
Vinyl chloride	ND	2.6	"	"	"	"	"	"	
Bromomethane	ND	16	"	"	"	"	"	"	
Chloroethane	ND	8.0	"	"	"	"	"	"	
Trichlorofluoromethane (F11)	ND	5.6	"	"	"	"	"	"	
Acetone	**33**	24	"	"	"	"	"	"	
1,1-Dichloroethene	ND	4.0	"	"	"	"	"	"	
1,1,2-Trichlorotrifluoroethane (F113)	ND	7.7	"	"	"	"	"	"	
Methylene chloride (Dichloromethane)	ND	3.5	"	"	"	"	"	"	
Carbon disulfide	ND	6.3	"	"	"	"	"	"	
trans-1,2-Dichloroethene	ND	8.0	"	"	"	"	"	"	
1,1-Dichloroethane	ND	4.1	"	"	"	"	"	"	
2-Butanone (MEK)	ND	30	"	"	"	"	"	"	
cis-1,2-Dichloroethene	ND	4.0	"	"	"	"	"	"	
Chloroform	ND	4.9	"	"	"	"	"	"	
1,1,1-Trichloroethane	ND	5.5	"	"	"	"	"	"	
1,2-Dichloroethane (EDC)	ND	4.1	"	"	"	"	"	"	
Benzene	ND	3.2	"	"	"	"	"	"	
Carbon tetrachloride	ND	6.4	"	"	"	"	"	"	
Trichloroethene	ND	5.5	"	"	"	"	"	"	
1,2-Dichloropropane	ND	9.4	"	"	"	"	"	"	
Bromodichloromethane	ND	6.8	"	"	"	"	"	"	
cis-1,3-Dichloropropene	ND	4.6	"	"	"	"	"	"	
4-Methyl-2-pentanone (MIBK)	ND	8.3	"	"	"	"	"	"	
trans-1,3-Dichloropropene	ND	4.6	"	"	"	"	"	"	
Toluene	**18**	3.8	"	"	"	"	"	"	
1,1,2-Trichloroethane	ND	5.5	"	"	"	"	"	"	
2-Hexanone (MBK)	ND	8.3	"	"	"	"	"	"	
Dibromochloromethane	ND	8.6	"	"	"	"	"	"	
Tetrachloroethene	**18**	6.9	"	"	"	"	"	"	
1,2-Dibromoethane (EDB)	ND	7.8	"	"	"	"	"	"	
1,1,1,2-Tetrachloroethane	ND	7.0	"	"	"	"	"	"	
Chlorobenzene	ND	4.7	"	"	"	"	"	"	
Ethylbenzene	**4.5**	4.4	"	"	"	"	"	"	QL-1L
m,p-Xylene	**13**	8.8	"	"	"	"	"	"	
Styrene	ND	4.3	"	"	"	"	"	"	

H&P Mobile
Geochemistry Inc.

2470 Impala Drive
Carlsbad, CA 92010
760-804-9678 Phone
760-804-9159 Fax

Atlas Geo-Sampling Company	Project:	AG100615-15 Rev	
120 Nottaway Lane	Project Number:	Terracon Moundville	Reported:
Alpharetta, GA 30009	Project Manager:	Mr. Jim Fineis	19-Feb-16 13:05

Volatile Organic Compounds by EPA TO-15

H&P Mobile Geochemistry, Inc.

Analyte	Result	Reporting Limit	Units	Dilution Factor	Batch	Prepared	Analyzed	Method	Notes
SS4 (E510067-01) Vapor Sampled: 01-Oct-15 Received: 12-Oct-15									
o-Xylene	**5.5**	4.4	ug/m3	1	EJ51504	14-Oct-15	15-Oct-15	EPA TO-15	
Bromoform	ND	10	"	"	"	"	"	"	
1,1,2,2-Tetrachloroethane	ND	7.0	"	"	"	"	"	"	
4-Ethyltoluene	ND	5.0	"	"	"	"	"	"	
1,3,5-Trimethylbenzene	ND	5.0	"	"	"	"	"	"	
1,2,4-Trimethylbenzene	**5.6**	5.0	"	"	"	"	"	"	
1,3-Dichlorobenzene	ND	12	"	"	"	"	"	"	
1,4-Dichlorobenzene	ND	12	"	"	"	"	"	"	
1,2-Dichlorobenzene	ND	12	"	"	"	"	"	"	
Naphthalene	ND	5.3	"	"	"	"	"	"	
1,2,4-Trichlorobenzene	ND	38	"	"	"	"	"	"	
Hexachlorobutadiene	ND	54	"	"	"	"	"	"	
Surrogate: 1,2-Dichloroethane-d4		*108 %*	*76-134*		"	"	"	"	
Surrogate: Toluene-d8		*102 %*	*78-125*		"	"	"	"	
Surrogate: 4-Bromofluorobenzene		*93.1 %*	*77-127*		"	"	"	"	
SS13 (E510067-02) Vapor Sampled: 01-Oct-15 Received: 12-Oct-15									
Dichlorodifluoromethane (F12)	ND	5.0	ug/m3	1	EJ51504	14-Oct-15	15-Oct-15	EPA TO-15	
Chloromethane	**2.2**	2.1	"	"	"	"	"	"	
Dichlorotetrafluoroethane (F114)	ND	7.1	"	"	"	"	"	"	
Vinyl chloride	ND	2.6	"	"	"	"	"	"	
Bromomethane	ND	16	"	"	"	"	"	"	
Chloroethane	ND	8.0	"	"	"	"	"	"	
Trichlorofluoromethane (F11)	ND	5.6	"	"	"	"	"	"	
Acetone	**180**	24	"	"	"	"	"	"	
1,1-Dichloroethene	ND	4.0	"	"	"	"	"	"	
1,1,2-Trichlorotrifluoroethane (F113)	ND	7.7	"	"	"	"	"	"	
Methylene chloride (Dichloromethane)	**4.1**	3.5	"	"	"	"	"	"	
Carbon disulfide	ND	6.3	"	"	"	"	"	"	
trans-1,2-Dichloroethene	ND	8.0	"	"	"	"	"	"	
1,1-Dichloroethane	ND	4.1	"	"	"	"	"	"	
2-Butanone (MEK)	**31**	30	"	"	"	"	"	"	
cis-1,2-Dichloroethene	ND	4.0	"	"	"	"	"	"	
Chloroform	ND	4.9	"	"	"	"	"	"	
1,1,1-Trichloroethane	ND	5.5	"	"	"	"	"	"	
1,2-Dichloroethane (EDC)	ND	4.1	"	"	"	"	"	"	
Benzene	**8.2**	3.2	"	"	"	"	"	"	

H&P Mobile
Geochemistry Inc.

2470 Impala Drive
Carlsbad, CA 92010
760-804-9678 Phone
760-804-9159 Fax

Atlas Geo-Sampling Company	Project:	AG100615-15 Rev	
120 Nottaway Lane	Project Number:	Terracon Moundville	Reported:
Alpharetta, GA 30009	Project Manager:	Mr. Jim Fineis	19-Feb-16 13:05

Volatile Organic Compounds by EPA TO-15

H&P Mobile Geochemistry, Inc.

Analyte	Result	Reporting Limit	Units	Dilution Factor	Batch	Prepared	Analyzed	Method	Notes
SS13 (E510067-02) Vapor Sampled: 01-Oct-15 Received: 12-Oct-15									
Carbon tetrachloride	ND	6.4	ug/m3	1	EJ51504	14-Oct-15	15-Oct-15	EPA TO-15	
Trichloroethene	ND	5.5	"	"	"	"	"	"	
1,2-Dichloropropane	ND	9.4	"	"	"	"	"	"	
Bromodichloromethane	ND	6.8	"	"	"	"	"	"	
cis-1,3-Dichloropropene	ND	4.6	"	"	"	"	"	"	
4-Methyl-2-pentanone (MIBK)	**9.5**	8.3	"	"	"	"	"	"	
trans-1,3-Dichloropropene	ND	4.6	"	"	"	"	"	"	
Toluene	**110**	3.8	"	"	"	"	"	"	
1,1,2-Trichloroethane	ND	5.5	"	"	"	"	"	"	
2-Hexanone (MBK)	ND	8.3	"	"	"	"	"	"	
Dibromochloromethane	ND	8.6	"	"	"	"	"	"	
Tetrachloroethene	ND	6.9	"	"	"	"	"	"	
1,2-Dibromoethane (EDB)	ND	7.8	"	"	"	"	"	"	
1,1,1,2-Tetrachloroethane	ND	7.0	"	"	"	"	"	"	
Chlorobenzene	ND	4.7	"	"	"	"	"	"	
Ethylbenzene	**9.3**	4.4	"	"	"	"	"	"	QL-1L
m,p-Xylene	**69**	8.8	"	"	"	"	"	"	
Styrene	**5.7**	4.3	"	"	"	"	"	"	
o-Xylene	**24**	4.4	"	"	"	"	"	"	
Bromoform	ND	10	"	"	"	"	"	"	
1,1,2,2-Tetrachloroethane	ND	7.0	"	"	"	"	"	"	
4-Ethyltoluene	**11**	5.0	"	"	"	"	"	"	
1,3,5-Trimethylbenzene	**28**	5.0	"	"	"	"	"	"	
1,2,4-Trimethylbenzene	**70**	5.0	"	"	"	"	"	"	
1,3-Dichlorobenzene	ND	12	"	"	"	"	"	"	
1,4-Dichlorobenzene	ND	12	"	"	"	"	"	"	
1,2-Dichlorobenzene	ND	12	"	"	"	"	"	"	
Naphthalene	ND	5.3	"	"	"	"	"	"	
1,2,4-Trichlorobenzene	ND	38	"	"	"	"	"	"	
Hexachlorobutadiene	ND	54	"	"	"	"	"	"	
Surrogate: 1,2-Dichloroethane-d4		*108 %*	*76-134*		"	"	"	"	
Surrogate: Toluene-d8		*105 %*	*78-125*		"	"	"	"	
Surrogate: 4-Bromofluorobenzene		*95.9 %*	*77-127*		"	"	"	"	

H&P Mobile
Geochemistry Inc.

2470 Impala Drive
Carlsbad, CA 92010
760-804-9678 Phone
760-804-9159 Fax

Atlas Geo-Sampling Company	Project:	AG100615-15 Rev	
120 Nottaway Lane	Project Number:	Terracon Moundville	Reported:
Alpharetta, GA 30009	Project Manager:	Mr. Jim Fineis	19-Feb-16 13:05

Volatile Organic Compounds by EPA TO-15

H&P Mobile Geochemistry, Inc.

Analyte	Result	Reporting Limit	Units	Dilution Factor	Batch	Prepared	Analyzed	Method	Notes
SS14 (E510067-03) Vapor Sampled: 01-Oct-15 Received: 12-Oct-15									
Dichlorodifluoromethane (F12)	ND	5.0	ug/m3	1	EJ51504	14-Oct-15	15-Oct-15	EPA TO-15	
Chloromethane	ND	2.1	"	"	"	"	"	"	
Dichlorotetrafluoroethane (F114)	ND	7.1	"	"	"	"	"	"	
Vinyl chloride	ND	2.6	"	"	"	"	"	"	
Bromomethane	ND	16	"	"	"	"	"	"	
Chloroethane	ND	8.0	"	"	"	"	"	"	
Trichlorofluoromethane (F11)	ND	5.6	"	"	"	"	"	"	
Acetone	ND	24	"	"	"	"	"	"	
1,1-Dichloroethene	ND	4.0	"	"	"	"	"	"	
1,1,2-Trichlorotrifluoroethane (F113)	ND	7.7	"	"	"	"	"	"	
Methylene chloride (Dichloromethane)	ND	3.5	"	"	"	"	"	"	
Carbon disulfide	ND	6.3	"	"	"	"	"	"	
trans-1,2-Dichloroethene	ND	8.0	"	"	"	"	"	"	
1,1-Dichloroethane	ND	4.1	"	"	"	"	"	"	
2-Butanone (MEK)	ND	30	"	"	"	"	"	"	
cis-1,2-Dichloroethene	ND	4.0	"	"	"	"	"	"	
Chloroform	ND	4.9	"	"	"	"	"	"	
1,1,1-Trichloroethane	ND	5.5	"	"	"	"	"	"	
1,2-Dichloroethane (EDC)	ND	4.1	"	"	"	"	"	"	
Benzene	ND	3.2	"	"	"	"	"	"	
Carbon tetrachloride	ND	6.4	"	"	"	"	"	"	
Trichloroethene	ND	5.5	"	"	"	"	"	"	
1,2-Dichloropropane	ND	9.4	"	"	"	"	"	"	
Bromodichloromethane	ND	6.8	"	"	"	"	"	"	
cis-1,3-Dichloropropene	ND	4.6	"	"	"	"	"	"	
4-Methyl-2-pentanone (MIBK)	ND	8.3	"	"	"	"	"	"	
trans-1,3-Dichloropropene	ND	4.6	"	"	"	"	"	"	
Toluene	**34**	3.8	"	"	"	"	"	"	
1,1,2-Trichloroethane	ND	5.5	"	"	"	"	"	"	
2-Hexanone (MBK)	ND	8.3	"	"	"	"	"	"	
Dibromochloromethane	ND	8.6	"	"	"	"	"	"	
Tetrachloroethene	ND	6.9	"	"	"	"	"	"	
1,2-Dibromoethane (EDB)	ND	7.8	"	"	"	"	"	"	
1,1,1,2-Tetrachloroethane	ND	7.0	"	"	"	"	"	"	
Chlorobenzene	ND	4.7	"	"	"	"	"	"	
Ethylbenzene	**6.1**	4.4	"	"	"	"	"	"	QL-1L
m,p-Xylene	**21**	8.8	"	"	"	"	"	"	
Styrene	**6.6**	4.3	"	"	"	"	"	"	

H&P Mobile
Geochemistry Inc.

2470 Impala Drive
Carlsbad, CA 92010
760-804-9678 Phone
760-804-9159 Fax

Atlas Geo-Sampling Company	Project:	AG100615-15 Rev	
120 Nottaway Lane	Project Number:	Terracon Moundville	Reported:
Alpharetta, GA 30009	Project Manager:	Mr. Jim Fineis	19-Feb-16 13:05

Volatile Organic Compounds by EPA TO-15

H&P Mobile Geochemistry, Inc.

Analyte	Result	Reporting Limit	Units	Dilution Factor	Batch	Prepared	Analyzed	Method	Notes
SS14 (E510067-03) Vapor Sampled: 01-Oct-15 Received: 12-Oct-15									
o-Xylene	**7.6**	4.4	ug/m3	1	EJ51504	14-Oct-15	15-Oct-15	EPA TO-15	
Bromoform	ND	10	"	"	"	"	"	"	
1,1,2,2-Tetrachloroethane	ND	7.0	"	"	"	"	"	"	
4-Ethyltoluene	ND	5.0	"	"	"	"	"	"	
1,3,5-Trimethylbenzene	ND	5.0	"	"	"	"	"	"	
1,2,4-Trimethylbenzene	**12**	5.0	"	"	"	"	"	"	
1,3-Dichlorobenzene	ND	12	"	"	"	"	"	"	
1,4-Dichlorobenzene	ND	12	"	"	"	"	"	"	
1,2-Dichlorobenzene	ND	12	"	"	"	"	"	"	
Naphthalene	**5.4**	5.3	"	"	"	"	"	"	
1,2,4-Trichlorobenzene	ND	38	"	"	"	"	"	"	
Hexachlorobutadiene	ND	54	"	"	"	"	"	"	
Surrogate: 1,2-Dichloroethane-d4		*105 %*	*76-134*		"	"	"	"	
Surrogate: Toluene-d8		*105 %*	*78-125*		"	"	"	"	
Surrogate: 4-Bromofluorobenzene		*102 %*	*77-127*		"	"	"	"	

H&P Mobile
Geochemistry Inc.

2470 Impala Drive
Carlsbad, CA 92010
760-804-9678 Phone
760-804-9159 Fax

Atlas Geo-Sampling Company	Project:	AG100615-15 Rev	
120 Nottaway Lane	Project Number:	Terracon Moundville	Reported:
Alpharetta, GA 30009	Project Manager:	Mr. Jim Fineis	19-Feb-16 13:05

Volatile Organic Compounds by H&P 8260SV

H&P Mobile Geochemistry, Inc.

Analyte	Result	Reporting Limit	Units	Dilution Factor	Batch	Prepared	Analyzed	Method	Notes
SS7 (E510066-07) Vapor Sampled: 01-Oct-15 Received: 06-Oct-15									
Acetone	ND	5000	ug/m3	0.05	EJ51507	14-Oct-15	14-Oct-15	H&P 8260SV	
2-Butanone (MEK)	ND	2500	"	"	"	"	"	"	
2-Hexanone (MBK)	ND	2500	"	"	"	"	"	"	
4-Methyl-2-pentanone (MIBK)	ND	2500	"	"	"	"	"	"	
Dichlorodifluoromethane (F12)	ND	500	"	"	"	"	"	"	
Chloromethane	ND	500	"	"	"	"	"	"	
Vinyl chloride	ND	50	"	"	"	"	"	"	
Bromomethane	ND	500	"	"	"	"	"	"	
Chloroethane	ND	500	"	"	"	"	"	"	
Trichlorofluoromethane (F11)	ND	500	"	"	"	"	"	"	
1,1-Dichloroethene	ND	500	"	"	"	"	"	"	
1,1,2 Trichlorotrifluoroethane (F113)	ND	500	"	"	"	"	"	"	
Methylene chloride (Dichloromethane)	ND	500	"	"	"	"	"	"	
trans-1,2-Dichloroethene	ND	500	"	"	"	"	"	"	
1,1-Dichloroethane	ND	500	"	"	"	"	"	"	
cis-1,2-Dichloroethene	ND	500	"	"	"	"	"	"	
Chloroform	ND	100	"	"	"	"	"	"	
1,1,1-Trichloroethane	ND	500	"	"	"	"	"	"	
Carbon tetrachloride	ND	100	"	"	"	"	"	"	
1,2-Dichloroethane (EDC)	ND	100	"	"	"	"	"	"	
Benzene	**110**	100	"	"	"	"	"	"	
Trichloroethene	ND	100	"	"	"	"	"	"	
1,2-Dichloropropane	ND	500	"	"	"	"	"	"	
Bromodichloromethane	ND	500	"	"	"	"	"	"	
cis-1,3-Dichloropropene	ND	500	"	"	"	"	"	"	
Toluene	ND	1000	"	"	"	"	"	"	
trans-1,3-Dichloropropene	ND	500	"	"	"	"	"	"	
1,1,2-Trichloroethane	ND	500	"	"	"	"	"	"	
1,2-Dibromoethane (EDB)	ND	500	"	"	"	"	"	"	
Tetrachloroethene	ND	100	"	"	"	"	"	"	
Dibromochloromethane	ND	500	"	"	"	"	"	"	
Chlorobenzene	ND	100	"	"	"	"	"	"	
Ethylbenzene	**2400**	500	"	"	"	"	"	"	
1,1,1,2-Tetrachloroethane	ND	500	"	"	"	"	"	"	
m,p-Xylene	**7800**	500	"	"	"	"	"	"	
o-Xylene	**12000**	500	"	"	"	"	"	"	
Styrene	ND	500	"	"	"	"	"	"	
Bromoform	ND	500	"	"	"	"	"	"	

H&P Mobile
Geochemistry Inc.

2470 Impala Drive
Carlsbad, CA 92010
760-804-9678 Phone
760-804-9159 Fax

Atlas Geo-Sampling Company	Project:	AG100615-15 Rev	
120 Nottaway Lane	Project Number:	Terracon Moundville	Reported:
Alpharetta, GA 30009	Project Manager:	Mr. Jim Fineis	19-Feb-16 13:05

Volatile Organic Compounds by H&P 8260SV

H&P Mobile Geochemistry, Inc.

Analyte	Result	Reporting Limit	Units	Dilution Factor	Batch	Prepared	Analyzed	Method	Notes
SS7 (E510066-07) Vapor Sampled: 01-Oct-15 Received: 06-Oct-15									
1,1,2,2-Tetrachloroethane	ND	500	ug/m3	0.05	EJ51507	14-Oct-15	14-Oct-15	H&P 8260SV	
1,3,5-Trimethylbenzene	**27000**	500	"	"	"	"	"	"	
1,2,4-Trimethylbenzene	**56000**	500	"	"	"	"	"	"	
1,3-Dichlorobenzene	ND	500	"	"	"	"	"	"	
1,4-Dichlorobenzene	ND	500	"	"	"	"	"	"	
1,2-Dichlorobenzene	ND	500	"	"	"	"	"	"	
1,2,4-Trichlorobenzene	ND	500	"	"	"	"	"	"	
Hexachlorobutadiene	ND	500	"	"	"	"	"	"	
Naphthalene	**110**	100	"	"	"	"	"	"	
Surrogate: Dibromofluoromethane		*104 %*		*75-125*		*"*	*"*	*"*	*"*
Surrogate: 1,2-Dichloroethane-d4		*105 %*		*75-125*		*"*	*"*	*"*	*"*
Surrogate: Toluene-d8		*102 %*		*75-125*		*"*	*"*	*"*	*"*
Surrogate: 4-Bromofluorobenzene		*90.7 %*		*75-125*		*"*	*"*	*"*	*"*
SS8 (E510066-08) Vapor Sampled: 01-Oct-15 Received: 06-Oct-15									
Acetone	ND	5000	ug/m3	0.05	EJ51507	14-Oct-15	14-Oct-15	H&P 8260SV	
2-Butanone (MEK)	ND	2500	"	"	"	"	"	"	
2-Hexanone (MBK)	ND	2500	"	"	"	"	"	"	
4-Methyl-2-pentanone (MIBK)	ND	2500	"	"	"	"	"	"	
Dichlorodifluoromethane (F12)	ND	500	"	"	"	"	"	"	
Chloromethane	ND	500	"	"	"	"	"	"	
Vinyl chloride	ND	50	"	"	"	"	"	"	
Bromomethane	ND	500	"	"	"	"	"	"	
Chloroethane	ND	500	"	"	"	"	"	"	
Trichlorofluoromethane (F11)	ND	500	"	"	"	"	"	"	
1,1-Dichloroethene	ND	500	"	"	"	"	"	"	
1,1,2 Trichlorotrifluoroethane (F113)	ND	500	"	"	"	"	"	"	
Methylene chloride (Dichloromethane)	ND	500	"	"	"	"	"	"	
trans-1,2-Dichloroethene	ND	500	"	"	"	"	"	"	
1,1-Dichloroethane	ND	500	"	"	"	"	"	"	
cis-1,2-Dichloroethene	ND	500	"	"	"	"	"	"	
Chloroform	ND	100	"	"	"	"	"	"	
1,1,1-Trichloroethane	ND	500	"	"	"	"	"	"	
Carbon tetrachloride	ND	100	"	"	"	"	"	"	
1,2-Dichloroethane (EDC)	ND	100	"	"	"	"	"	"	
Benzene	**1700**	100	"	"	"	"	"	"	
Trichloroethene	**170**	100	"	"	"	"	"	"	

H&P Mobile
Geochemistry Inc.

2470 Impala Drive
Carlsbad, CA 92010
760-804-9678 Phone
760-804-9159 Fax

Atlas Geo-Sampling Company	Project:	AG100615-15 Rev	
120 Nottaway Lane	Project Number:	Terracon Moundville	Reported:
Alpharetta, GA 30009	Project Manager:	Mr. Jim Fineis	19-Feb-16 13:05

Volatile Organic Compounds by H&P 8260SV

H&P Mobile Geochemistry, Inc.

Analyte	Result	Reporting Limit	Units	Dilution Factor	Batch	Prepared	Analyzed	Method	Notes
SS8 (E510066-08) Vapor Sampled: 01-Oct-15 Received: 06-Oct-15									
1,2-Dichloropropane	ND	500	ug/m3	0.05	EJ51507	14-Oct-15	14-Oct-15	H&P 8260SV	
Bromodichloromethane	ND	500	"	"	"	"	"	"	
cis-1,3-Dichloropropene	ND	500	"	"	"	"	"	"	
Toluene	ND	1000	"	"	"	"	"	"	
trans-1,3-Dichloropropene	ND	500	"	"	"	"	"	"	
1,1,2-Trichloroethane	ND	500	"	"	"	"	"	"	
1,2-Dibromoethane (EDB)	ND	500	"	"	"	"	"	"	
Tetrachloroethene	ND	100	"	"	"	"	"	"	
Dibromochloromethane	ND	500	"	"	"	"	"	"	
Chlorobenzene	ND	100	"	"	"	"	"	"	
Ethylbenzene	**3600**	500	"	"	"	"	"	"	
1,1,1,2-Tetrachloroethane	ND	500	"	"	"	"	"	"	
m,p-Xylene	**5500**	500	"	"	"	"	"	"	
o-Xylene	**12000**	500	"	"	"	"	"	"	
Styrene	ND	500	"	"	"	"	"	"	
Bromoform	ND	500	"	"	"	"	"	"	
1,1,2,2-Tetrachloroethane	ND	500	"	"	"	"	"	"	
1,3,5-Trimethylbenzene	**29000**	500	"	"	"	"	"	"	
1,2,4-Trimethylbenzene	**54000**	500	"	"	"	"	"	"	
1,3-Dichlorobenzene	ND	500	"	"	"	"	"	"	
1,4-Dichlorobenzene	ND	500	"	"	"	"	"	"	
1,2-Dichlorobenzene	ND	500	"	"	"	"	"	"	
1,2,4-Trichlorobenzene	ND	500	"	"	"	"	"	"	
Hexachlorobutadiene	ND	500	"	"	"	"	"	"	
Naphthalene	**210**	100	"	"	"	"	"	"	
Surrogate: Dibromofluoromethane		*96.6 %*	*75-125*		"	"	"	"	
Surrogate: 1,2-Dichloroethane-d4		*103 %*	*75-125*		"	"	"	"	
Surrogate: Toluene-d8		*95.8 %*	*75-125*		"	"	"	"	
Surrogate: 4-Bromofluorobenzene		*93.6 %*	*75-125*		"	"	"	"	

H&P Mobile
Geochemistry Inc.

2470 Impala Drive
Carlsbad, CA 92010
760-804-9678 Phone
760-804-9159 Fax

Atlas Geo-Sampling Company	Project:	AG100615-15 Rev	
120 Nottaway Lane	Project Number:	Terracon Moundville	Reported:
Alpharetta, GA 30009	Project Manager:	Mr. Jim Fineis	19-Feb-16 13:05

Volatile Organic Compounds by H&P 8260SV

H&P Mobile Geochemistry, Inc.

Analyte	Result	Reporting Limit	Units	Dilution Factor	Batch	Prepared	Analyzed	Method	Notes
SS9 (E510066-09) Vapor Sampled: 01-Oct-15 Received: 06-Oct-15									
Acetone	ND	50000	ug/m3	0.5	EJ51507	14-Oct-15	14-Oct-15	H&P 8260SV	
2-Butanone (MEK)	ND	10000	"	"	"	"	"	"	
2-Hexanone (MBK)	ND	10000	"	"	"	"	"	"	
4-Methyl-2-pentanone (MIBK)	ND	10000	"	"	"	"	"	"	
Dichlorodifluoromethane (F12)	ND	5000	"	"	"	"	"	"	
Chloromethane	ND	5000	"	"	"	"	"	"	
Vinyl chloride	ND	500	"	"	"	"	"	"	
Bromomethane	ND	5000	"	"	"	"	"	"	
Chloroethane	ND	5000	"	"	"	"	"	"	
Trichlorofluoromethane (F11)	ND	5000	"	"	"	"	"	"	
1,1-Dichloroethene	ND	5000	"	"	"	"	"	"	
1,1,2 Trichlorotrifluoroethane (F113)	ND	5000	"	"	"	"	"	"	
Methylene chloride (Dichloromethane)	ND	5000	"	"	"	"	"	"	
trans-1,2-Dichloroethene	ND	5000	"	"	"	"	"	"	
1,1-Dichloroethane	ND	5000	"	"	"	"	"	"	
cis-1,2-Dichloroethene	ND	5000	"	"	"	"	"	"	
Chloroform	ND	1000	"	"	"	"	"	"	
1,1,1-Trichloroethane	ND	5000	"	"	"	"	"	"	
Carbon tetrachloride	ND	1000	"	"	"	"	"	"	
1,2-Dichloroethane (EDC)	ND	1000	"	"	"	"	"	"	
Benzene	**1100**	1000	"	"	"	"	"	"	
Trichloroethene	ND	1000	"	"	"	"	"	"	
1,2-Dichloropropane	ND	5000	"	"	"	"	"	"	
Bromodichloromethane	ND	5000	"	"	"	"	"	"	
cis-1,3-Dichloropropene	ND	5000	"	"	"	"	"	"	
Toluene	**12000**	10000	"	"	"	"	"	"	
trans-1,3-Dichloropropene	ND	5000	"	"	"	"	"	"	
1,1,2-Trichloroethane	ND	5000	"	"	"	"	"	"	
1,2-Dibromoethane (EDB)	ND	5000	"	"	"	"	"	"	
Tetrachloroethene	ND	1000	"	"	"	"	"	"	
Dibromochloromethane	ND	5000	"	"	"	"	"	"	
Chlorobenzene	ND	1000	"	"	"	"	"	"	
Ethylbenzene	**510000**	5000	"	"	"	"	"	"	
1,1,1,2-Tetrachloroethane	ND	5000	"	"	"	"	"	"	
m,p-Xylene	**510000**	5000	"	"	"	"	"	"	
o-Xylene	**66000**	5000	"	"	"	"	"	"	
Styrene	ND	5000	"	"	"	"	"	"	
Bromoform	ND	5000	"	"	"	"	"	"	

H&P Mobile
Geochemistry Inc.

2470 Impala Drive
Carlsbad, CA 92010
760-804-9678 Phone
760-804-9159 Fax

Atlas Geo-Sampling Company	Project:	AG100615-15 Rev	
120 Nottaway Lane	Project Number:	Terracon Moundville	Reported:
Alpharetta, GA 30009	Project Manager:	Mr. Jim Fineis	19-Feb-16 13:05

Volatile Organic Compounds by H&P 8260SV

H&P Mobile Geochemistry, Inc.

Analyte	Result	Reporting Limit	Units	Dilution Factor	Batch	Prepared	Analyzed	Method	Notes
SS9 (E510066-09) Vapor Sampled: 01-Oct-15 Received: 06-Oct-15									
1,1,2,2-Tetrachloroethane	ND	5000	ug/m3	0.5	EJ51507	14-Oct-15	14-Oct-15	H&P 8260SV	
1,3,5-Trimethylbenzene	**21000**	5000	"	"	"	"	"	"	
1,2,4-Trimethylbenzene	**100000**	5000	"	"	"	"	"	"	
1,3-Dichlorobenzene	ND	5000	"	"	"	"	"	"	
1,4-Dichlorobenzene	ND	5000	"	"	"	"	"	"	
1,2-Dichlorobenzene	ND	5000	"	"	"	"	"	"	
1,2,4-Trichlorobenzene	ND	5000	"	"	"	"	"	"	
Hexachlorobutadiene	ND	5000	"	"	"	"	"	"	
Naphthalene	ND	1000	"	"	"	"	"	"	
Surrogate: Dibromofluoromethane		*97.8 %*		*75-125*		"	"	"	"
Surrogate: 1,2-Dichloroethane-d4		*103 %*		*75-125*		"	"	"	"
Surrogate: Toluene-d8		*96.8 %*		*75-125*		"	"	"	"
Surrogate: 4-Bromofluorobenzene		*98.3 %*		*75-125*		"	"	"	"
SS11 (E510066-10) Vapor Sampled: 01-Oct-15 Received: 06-Oct-15									
Acetone	ND	5000	ug/m3	0.05	EJ51507	14-Oct-15	14-Oct-15	H&P 8260SV	
2-Butanone (MEK)	ND	2500	"	"	"	"	"	"	
2-Hexanone (MBK)	ND	2500	"	"	"	"	"	"	
4-Methyl-2-pentanone (MIBK)	ND	2500	"	"	"	"	"	"	
Dichlorodifluoromethane (F12)	ND	500	"	"	"	"	"	"	
Chloromethane	ND	500	"	"	"	"	"	"	
Vinyl chloride	ND	50	"	"	"	"	"	"	
Bromomethane	ND	500	"	"	"	"	"	"	
Chloroethane	ND	500	"	"	"	"	"	"	
Trichlorofluoromethane (F11)	ND	500	"	"	"	"	"	"	
1,1-Dichloroethene	ND	500	"	"	"	"	"	"	
1,1,2 Trichlorotrifluoroethane (F113)	ND	500	"	"	"	"	"	"	
Methylene chloride (Dichloromethane)	ND	500	"	"	"	"	"	"	
trans-1,2-Dichloroethene	ND	500	"	"	"	"	"	"	
1,1-Dichloroethane	**2900**	500	"	"	"	"	"	"	
cis-1,2-Dichloroethene	ND	500	"	"	"	"	"	"	
Chloroform	ND	100	"	"	"	"	"	"	
1,1,1-Trichloroethane	ND	500	"	"	"	"	"	"	
Carbon tetrachloride	ND	100	"	"	"	"	"	"	
1,2-Dichloroethane (EDC)	ND	100	"	"	"	"	"	"	
Benzene	**3800**	100	"	"	"	"	"	"	
Trichloroethene	ND	100	"	"	"	"	"	"	

H&P Mobile
Geochemistry Inc.

2470 Impala Drive
Carlsbad, CA 92010
760-804-9678 Phone
760-804-9159 Fax

Atlas Geo-Sampling Company	Project: AG100615-15 Rev	
120 Nottaway Lane	Project Number: Terracon Moundville	Reported:
Alpharetta, GA 30009	Project Manager: Mr. Jim Fineis	19-Feb-16 13:05

Volatile Organic Compounds by H&P 8260SV

H&P Mobile Geochemistry, Inc.

Analyte	Result	Reporting Limit	Units	Dilution Factor	Batch	Prepared	Analyzed	Method	Notes
SS11 (E510066-10) Vapor Sampled: 01-Oct-15 Received: 06-Oct-15									
1,2-Dichloropropane	ND	500	ug/m3	0.05	EJ51507	14-Oct-15	14-Oct-15	H&P 8260SV	
Bromodichloromethane	ND	500	"	"	"	"	"	"	
cis-1,3-Dichloropropene	ND	500	"	"	"	"	"	"	
Toluene	**26000**	1000	"	"	"	"	"	"	
trans-1,3-Dichloropropene	ND	500	"	"	"	"	"	"	
1,1,2-Trichloroethane	ND	500	"	"	"	"	"	"	
1,2-Dibromoethane (EDB)	ND	500	"	"	"	"	"	"	
Tetrachloroethene	ND	100	"	"	"	"	"	"	
Dibromochloromethane	ND	500	"	"	"	"	"	"	
Chlorobenzene	ND	100	"	"	"	"	"	"	
Ethylbenzene	**9800**	500	"	"	"	"	"	"	
1,1,1,2-Tetrachloroethane	ND	500	"	"	"	"	"	"	
m,p-Xylene	**17000**	500	"	"	"	"	"	"	
o-Xylene	**18000**	500	"	"	"	"	"	"	
Styrene	ND	500	"	"	"	"	"	"	
Bromoform	ND	500	"	"	"	"	"	"	
1,1,2,2-Tetrachloroethane	ND	500	"	"	"	"	"	"	
1,3,5-Trimethylbenzene	**13000**	500	"	"	"	"	"	"	
1,2,4-Trimethylbenzene	**21000**	500	"	"	"	"	"	"	
1,3-Dichlorobenzene	ND	500	"	"	"	"	"	"	
1,4-Dichlorobenzene	ND	500	"	"	"	"	"	"	
1,2-Dichlorobenzene	ND	500	"	"	"	"	"	"	
1,2,4-Trichlorobenzene	ND	500	"	"	"	"	"	"	
Hexachlorobutadiene	ND	500	"	"	"	"	"	"	
Naphthalene	**100**	100	"	"	"	"	"	"	
Surrogate: Dibromofluoromethane		*97.0 %*	*75-125*		"	"	"	"	
Surrogate: 1,2-Dichloroethane-d4		*104 %*	*75-125*		"	"	"	"	
Surrogate: Toluene-d8		*97.9 %*	*75-125*		"	"	"	"	
Surrogate: 4-Bromofluorobenzene		*102 %*	*75-125*		"	"	"	"	

H&P Mobile
Geochemistry Inc.

2470 Impala Drive
Carlsbad, CA 92010
760-804-9678 Phone
760-804-9159 Fax

Atlas Geo-Sampling Company	Project: AG100615-15 Rev	
120 Nottaway Lane	Project Number: Terracon Moundville	Reported:
Alpharetta, GA 30009	Project Manager: Mr. Jim Fineis	19-Feb-16 13:05

Organic Compounds by H&P TO-17 - Quality Control

H&P Mobile Geochemistry, Inc.

Analyte	Result	Reporting Limit	Units	Spike Level	Source Result	%REC	%REC Limits	RPD	RPD Limit	Notes
Batch EJ51309 - EPA TO-17										
Blank (EJ51309-BLK1)				Prepared & Analyzed: 09-Oct-15						
Dicyclopentadiene	ND	25	ug/m3							
Surrogate: Toluene-d8	*219*		*"*	*210*		*104*	*75-125*			
Surrogate: 4-Bromofluorobenzene	*341*		*"*	*365*		*93.5*	*75-125*			
Batch EJ51310 - EPA TO-17										
Blank (EJ51310-BLK1)				Prepared & Analyzed: 12-Oct-15						
Dicyclopentadiene	ND	25	ug/m3							
Surrogate: Toluene-d8	*222*		*"*	*210*		*106*	*75-125*			
Surrogate: 4-Bromofluorobenzene	*338*		*"*	*365*		*92.7*	*75-125*			

H&P Mobile
Geochemistry Inc.

2470 Impala Drive
Carlsbad, CA 92010
760-804-9678 Phone
760-804-9159 Fax

Atlas Geo-Sampling Company	Project:	AG100615-15 Rev	
120 Nottaway Lane	Project Number:	Terracon Moundville	Reported:
Alpharetta, GA 30009	Project Manager:	Mr. Jim Fineis	19-Feb-16 13:05

Volatile Organic Compounds by EPA TO-15 - Quality Control

H&P Mobile Geochemistry, Inc.

Analyte	Result	Reporting Limit	Units	Spike Level	Source Result	%REC	%REC Limits	RPD	RPD Limit	Notes
Batch EJ51504 - TO-15										
Blank (EJ51504-BLK1)				Prepared & Analyzed: 14-Oct-15						
Dichlorodifluoromethane (F12)	ND	5.0	ug/m3							
Chloromethane	ND	2.1	"							
Dichlorotetrafluoroethane (F114)	ND	7.1	"							
Vinyl chloride	ND	2.6	"							
Bromomethane	ND	16	"							
Chloroethane	ND	8.0	"							
Trichlorofluoromethane (F11)	ND	5.6	"							
Acetone	ND	24	"							
1,1-Dichloroethene	ND	4.0	"							
1,1,2-Trichlorotrifluoroethane (F113)	ND	7.7	"							
Methylene chloride (Dichloromethane)	ND	3.5	"							
Carbon disulfide	ND	6.3	"							
trans-1,2-Dichloroethene	ND	8.0	"							
1,1-Dichloroethane	ND	4.1	"							
2-Butanone (MEK)	ND	30	"							
cis-1,2-Dichloroethene	ND	4.0	"							
Chloroform	ND	4.9	"							
1,1,1-Trichloroethane	ND	5.5	"							
1,2-Dichloroethane (EDC)	ND	4.1	"							
Benzene	ND	3.2	"							
Carbon tetrachloride	ND	6.4	"							
Trichloroethene	ND	5.5	"							
1,2-Dichloropropane	ND	9.4	"							
Bromodichloromethane	ND	6.8	"							
cis-1,3-Dichloropropene	ND	4.6	"							
4-Methyl-2-pentanone (MIBK)	ND	8.3	"							
trans-1,3-Dichloropropene	ND	4.6	"							
Toluene	ND	3.8	"							
1,1,2-Trichloroethane	ND	5.5	"							
2-Hexanone (MBK)	ND	8.3	"							
Dibromochloromethane	ND	8.6	"							
Tetrachloroethene	ND	6.9	"							
1,2-Dibromoethane (EDB)	ND	7.8	"							
1,1,1,2-Tetrachloroethane	ND	7.0	"							

H&P Mobile
Geochemistry Inc.

2470 Impala Drive
Carlsbad, CA 92010
760-804-9678 Phone
760-804-9159 Fax

Atlas Geo-Sampling Company	Project: AG100615-15 Rev	
120 Nottaway Lane	Project Number: Terracon Moundville	Reported:
Alpharetta, GA 30009	Project Manager: Mr. Jim Fineis	19-Feb-16 13:05

Volatile Organic Compounds by EPA TO-15 - Quality Control

H&P Mobile Geochemistry, Inc.

Analyte	Result	Reporting Limit	Units	Spike Level	Source Result	%REC	%REC Limits	RPD	RPD Limit	Notes
Batch EJ51504 - TO-15										
Blank (EJ51504-BLK1)				Prepared & Analyzed: 14-Oct-15						
Chlorobenzene	ND	4.7	ug/m3							
Ethylbenzene	ND	4.4	"							
m,p-Xylene	ND	8.8	"							
Styrene	ND	4.3	"							
o-Xylene	ND	4.4	"							
Bromoform	ND	10	"							
1,1,2,2-Tetrachloroethane	ND	7.0	"							
4-Ethyltoluene	ND	5.0	"							
1,3,5-Trimethylbenzene	ND	5.0	"							
1,2,4-Trimethylbenzene	ND	5.0	"							
1,3-Dichlorobenzene	ND	12	"							
1,4-Dichlorobenzene	ND	12	"							
1,2-Dichlorobenzene	ND	12	"							
Naphthalene	ND	5.3	"							
1,2,4-Trichlorobenzene	ND	38	"							
Hexachlorobutadiene	ND	54	"							
Surrogate: 1,2-Dichloroethane-d4	*228*		*"*	*214*		*106*	*76-134*			
Surrogate: Toluene-d8	*213*		*"*	*207*		*103*	*78-125*			
Surrogate: 4-Bromofluorobenzene	*326*		*"*	*364*		*89.3*	*77-127*			
LCS (EJ51504-BS1)				Prepared & Analyzed: 14-Oct-15						
Dichlorodifluoromethane (F12)	10	5.0	ug/m3	10.1		103	70-130			
Vinyl chloride	5.1	2.6	"	5.20		98.4	70-130			
Chloroethane	5.4	8.0	"	5.36		100	70-130			
Trichlorofluoromethane (F11)	12	5.6	"	11.3		103	70-130			
1,1-Dichloroethene	7.6	4.0	"	8.08		94.3	70-130			
1,1,2-Trichlorotrifluoroethane (F113)	16	7.7	"	15.5		100	70-130			
Methylene chloride (Dichloromethane)	8.0	3.5	"	7.08		112	70-130			
trans-1,2-Dichloroethene	7.9	8.0	"	8.08		98.1	70-130			
1,1-Dichloroethane	8.8	4.1	"	8.24		107	70-130			
cis-1,2-Dichloroethene	7.2	4.0	"	8.00		90.4	70-130			
Chloroform	9.9	4.9	"	9.92		99.8	70-130			
1,1,1-Trichloroethane	11	5.5	"	11.1		95.4	70-130			

H&P Mobile
Geochemistry Inc.

2470 Impala Drive
Carlsbad, CA 92010
760-804-9678 Phone
760-804-9159 Fax

Atlas Geo-Sampling Company	Project: AG100615-15 Rev	
120 Nottaway Lane	Project Number: Terracon Moundville	Reported:
Alpharetta, GA 30009	Project Manager: Mr. Jim Fineis	19-Feb-16 13:05

Volatile Organic Compounds by EPA TO-15 - Quality Control

H&P Mobile Geochemistry, Inc.

Analyte	Result	Reporting Limit	Units	Spike Level	Source Result	%REC	%REC Limits	RPD	RPD Limit	Notes
Batch EJ51504 - TO-15										
LCS (EJ51504-BS1)				Prepared & Analyzed: 14-Oct-15						
1,2-Dichloroethane (EDC)	8.0	4.1	ug/m3	8.24		97.5	70-130			
Benzene	5.5	3.2	"	6.48		84.5	70-130			
Carbon tetrachloride	14	6.4	"	12.8		108	70-130			
Trichloroethene	9.3	5.5	"	11.0		84.6	70-130			
Toluene	6.8	3.8	"	7.68		88.2	70-130			
1,1,2-Trichloroethane	9.7	5.5	"	11.1		86.8	70-130			
Tetrachloroethene	11	6.9	"	13.8		79.0	70-130			
1,1,1,2-Tetrachloroethane	13	7.0	"	14.0		91.7	70-130			
Ethylbenzene	5.9	4.4	"	8.84		66.8	70-130			QL-1L
m,p-Xylene	14	8.8	"	17.7		78.7	70-130			
o-Xylene	6.7	4.4	"	8.84		76.2	70-130			
1,1,2,2-Tetrachloroethane	12	7.0	"	14.0		82.3	70-130			
Surrogate: 1,2-Dichloroethane-d4	*250*		*"*	*214*		*116*	*76-134*			
Surrogate: Toluene-d8	*220*		*"*	*207*		*106*	*78-125*			
Surrogate: 4-Bromofluorobenzene	*370*		*"*	*364*		*102*	*77-127*			
LCS Dup (EJ51504-BSD1)				Prepared & Analyzed: 14-Oct-15						
Dichlorodifluoromethane (F12)	9.5	5.0	ug/m3	10.1		94.0	70-130	9.01	25	
Vinyl chloride	4.7	2.6	"	5.20		90.2	70-130	8.67	25	
Chloroethane	5.2	8.0	"	5.36		97.9	70-130	2.17	25	
Trichlorofluoromethane (F11)	11	5.6	"	11.3		96.2	70-130	6.90	25	
1,1-Dichloroethene	7.2	4.0	"	8.08		89.0	70-130	5.76	25	
1,1,2-Trichlorotrifluoroethane (F113)	15	7.7	"	15.5		94.6	70-130	5.52	25	
Methylene chloride (Dichloromethane)	7.1	3.5	"	7.08		99.9	70-130	11.7	25	
trans-1,2-Dichloroethene	7.3	8.0	"	8.08		90.4	70-130	8.24	25	
1,1-Dichloroethane	8.0	4.1	"	8.24		96.6	70-130	10.4	25	
cis-1,2-Dichloroethene	6.8	4.0	"	8.00		84.6	70-130	6.55	25	
Chloroform	9.0	4.9	"	9.92		90.3	70-130	10.0	25	
1,1,1-Trichloroethane	9.8	5.5	"	11.1		88.3	70-130	7.83	25	
1,2-Dichloroethane (EDC)	7.5	4.1	"	8.24		91.5	70-130	6.33	25	
Benzene	5.0	3.2	"	6.48		77.7	70-130	8.31	25	
Carbon tetrachloride	13	6.4	"	12.8		97.9	70-130	9.70	25	
Trichloroethene	8.8	5.5	"	11.0		79.9	70-130	5.80	25	

H&P Mobile
Geochemistry Inc.

2470 Impala Drive
Carlsbad, CA 92010
760-804-9678 Phone
760-804-9159 Fax

Atlas Geo-Sampling Company	Project: AG100615-15 Rev	
120 Nottaway Lane	Project Number: Terracon Moundville	Reported:
Alpharetta, GA 30009	Project Manager: Mr. Jim Fineis	19-Feb-16 13:05

Volatile Organic Compounds by EPA TO-15 - Quality Control

H&P Mobile Geochemistry, Inc.

Analyte	Result	Reporting Limit	Units	Spike Level	Source Result	%REC	%REC Limits	RPD	RPD Limit	Notes
Batch EJ51504 - TO-15										
LCS Dup (EJ51504-BSD1)				Prepared & Analyzed: 14-Oct-15						
Toluene	6.3	3.8	ug/m3	7.68		82.0	70-130	7.30	25	
1,1,2-Trichloroethane	9.2	5.5	"	11.1		83.1	70-130	4.38	25	
Tetrachloroethene	11	6.9	"	13.8		78.5	70-130	0.633	25	
1,1,1,2-Tetrachloroethane	13	7.0	"	14.0		90.3	70-130	1.48	25	
Ethylbenzene	6.2	4.4	"	8.84		69.7	70-130	4.23	25	QL-1L
m,p-Xylene	14	8.8	"	17.7		81.5	70-130	3.51	25	
o-Xylene	6.6	4.4	"	8.84		74.7	70-130	2.04	25	
1,1,2,2-Tetrachloroethane	12	7.0	"	14.0		82.5	70-130	0.181	25	
Surrogate: 1,2-Dichloroethane-d4	*228*		*"*	*214*		*106*	*76-134*			
Surrogate: Toluene-d8	*212*		*"*	*207*		*102*	*78-125*			
Surrogate: 4-Bromofluorobenzene	*380*		*"*	*364*		*104*	*77-127*			

H&P Mobile
Geochemistry Inc.

2470 Impala Drive
Carlsbad, CA 92010
760-804-9678 Phone
760-804-9159 Fax

Atlas Geo-Sampling Company	Project:	AG100615-15 Rev	
120 Nottaway Lane	Project Number:	Terracon Moundville	Reported:
Alpharetta, GA 30009	Project Manager:	Mr. Jim Fineis	19-Feb-16 13:05

Volatile Organic Compounds by H&P 8260SV - Quality Control

H&P Mobile Geochemistry, Inc.

Analyte	Result	Reporting Limit	Units	Spike Level	Source Result	%REC	%REC Limits	RPD	RPD Limit	Notes
Batch EJ51507 - EPA 5030										
Blank (EJ51507-BLK1)				Prepared & Analyzed: 14-Oct-15						
Acetone	ND	5000	ug/m3							
2-Butanone (MEK)	ND	2500	"							
2-Hexanone (MBK)	ND	2500	"							
4-Methyl-2-pentanone (MIBK)	ND	2500	"							
Dichlorodifluoromethane (F12)	ND	500	"							
Chloromethane	ND	500	"							
Vinyl chloride	ND	50	"							
Bromomethane	ND	500	"							
Chloroethane	ND	500	"							
Trichlorofluoromethane (F11)	ND	500	"							
1,1-Dichloroethene	ND	500	"							
1,1,2 Trichlorotrifluoroethane (F113)	ND	500	"							
Methylene chloride (Dichloromethane)	ND	500	"							
trans-1,2-Dichloroethene	ND	500	"							
1,1-Dichloroethane	ND	500	"							
cis-1,2-Dichloroethene	ND	500	"							
Chloroform	ND	100	"							
1,1,1-Trichloroethane	ND	500	"							
Carbon tetrachloride	ND	100	"							
1,2-Dichloroethane (EDC)	ND	100	"							
Benzene	ND	100	"							
Trichloroethene	ND	100	"							
1,2-Dichloropropane	ND	500	"							
Bromodichloromethane	ND	500	"							
cis-1,3-Dichloropropene	ND	500	"							
Toluene	ND	1000	"							
trans-1,3-Dichloropropene	ND	500	"							
1,1,2-Trichloroethane	ND	500	"							
1,2-Dibromoethane (EDB)	ND	500	"							
Tetrachloroethene	ND	100	"							
Dibromochloromethane	ND	500	"							
Chlorobenzene	ND	100	"							
Ethylbenzene	ND	500	"							
1,1,1,2-Tetrachloroethane	ND	500	"							

H&P Mobile
Geochemistry Inc.

2470 Impala Drive
Carlsbad, CA 92010
760-804-9678 Phone
760-804-9159 Fax

Atlas Geo-Sampling Company	Project: AG100615-15 Rev	
120 Nottaway Lane	Project Number: Terracon Moundville	Reported:
Alpharetta, GA 30009	Project Manager: Mr. Jim Fineis	19-Feb-16 13:05

Volatile Organic Compounds by H&P 8260SV - Quality Control

H&P Mobile Geochemistry, Inc.

Analyte	Result	Reporting Limit	Units	Spike Level	Source Result	%REC	%REC Limits	RPD	RPD Limit	Notes
Batch EJ51507 - EPA 5030										
Blank (EJ51507-BLK1)				Prepared & Analyzed: 14-Oct-15						
m,p-Xylene	ND	500	ug/m3							
o-Xylene	ND	500	"							
Styrene	ND	500	"							
Bromoform	ND	500	"							
1,1,2,2-Tetrachloroethane	ND	500	"							
1,3,5-Trimethylbenzene	ND	500	"							
1,2,4-Trimethylbenzene	ND	500	"							
1,3-Dichlorobenzene	ND	500	"							
1,4-Dichlorobenzene	ND	500	"							
1,2-Dichlorobenzene	ND	500	"							
1,2,4-Trichlorobenzene	ND	500	"							
Hexachlorobutadiene	ND	500	"							
Naphthalene	ND	100	"							
Surrogate: Dibromofluoromethane	*2690*		*"*	*2500*		*108*	*75-125*			
Surrogate: 1,2-Dichloroethane-d4	*2810*		*"*	*2500*		*112*	*75-125*			
Surrogate: Toluene-d8	*2560*		*"*	*2500*		*102*	*75-125*			
Surrogate: 4-Bromofluorobenzene	*2580*		*"*	*2500*		*103*	*75-125*			
LCS (EJ51507-BS1)				Prepared & Analyzed: 14-Oct-15						
Dichlorodifluoromethane (F12)	3600	500	ug/m3	5000		72.2	70-130			
Vinyl chloride	4200	50	"	5000		83.6	70-130			
Chloroethane	4400	500	"	5000		89.0	70-130			
Trichlorofluoromethane (F11)	4700	500	"	5000		94.7	70-130			
1,1-Dichloroethene	5300	500	"	5000		106	70-130			
1,1,2 Trichlorotrifluoroethane (F113)	6000	500	"	5000		120	70-130			
Methylene chloride (Dichloromethane)	4700	500	"	5000		94.3	70-130			
trans-1,2-Dichloroethene	5200	500	"	5000		103	70-130			
1,1-Dichloroethane	5100	500	"	5000		103	70-130			
cis-1,2-Dichloroethene	5200	500	"	5000		103	70-130			
Chloroform	4800	100	"	5000		96.6	70-130			
1,1,1-Trichloroethane	5000	500	"	5000		99.8	70-130			
Carbon tetrachloride	5500	100	"	5000		110	70-130			
1,2-Dichloroethane (EDC)	4900	100	"	5000		98.3	70-130			

H&P Mobile
Geochemistry Inc.

2470 Impala Drive
Carlsbad, CA 92010
760-804-9678 Phone
760-804-9159 Fax

Atlas Geo-Sampling Company	Project:	AG100615-15 Rev	
120 Nottaway Lane	Project Number:	Terracon Moundville	Reported:
Alpharetta, GA 30009	Project Manager:	Mr. Jim Fineis	19-Feb-16 13:05

Volatile Organic Compounds by H&P 8260SV - Quality Control

H&P Mobile Geochemistry, Inc.

Analyte	Result	Reporting Limit	Units	Spike Level	Source Result	%REC	%REC Limits	RPD	RPD Limit	Notes
Batch EJ51507 - EPA 5030										
LCS (EJ51507-BS1)				Prepared & Analyzed: 14-Oct-15						
Benzene	5100	100	ug/m3	5000		102	70-130			
Trichloroethene	4900	100	"	5000		98.5	70-130			
Toluene	4900	1000	"	5000		99.0	70-130			
1,1,2-Trichloroethane	4600	500	"	5000		92.1	70-130			
Tetrachloroethene	4700	100	"	5000		93.3	70-130			
Ethylbenzene	5100	500	"	5000		103	70-130			
1,1,1,2-Tetrachloroethane	4900	500	"	5000		97.4	70-130			
m,p-Xylene	10000	500	"	10000		102	70-130			
o-Xylene	4900	500	"	5000		98.3	70-130			
1,1,2,2-Tetrachloroethane	4500	500	"	5000		90.0	70-130			
Surrogate: Dibromofluoromethane	*2450*		*"*	*2500*		*97.9*	*75-125*			
Surrogate: 1,2-Dichloroethane-d4	*2490*		*"*	*2500*		*99.5*	*75-125*			
Surrogate: Toluene-d8	*2580*		*"*	*2500*		*103*	*75-125*			
Surrogate: 4-Bromofluorobenzene	*2420*		*"*	*2500*		*96.7*	*75-125*			

H&P Mobile
Geochemistry Inc.

2470 Impala Drive
Carlsbad, CA 92010
760-804-9678 Phone
760-804-9159 Fax

Atlas Geo-Sampling Company	Project:	AG100615-15 Rev	
120 Nottaway Lane	Project Number:	Terracon Moundville	Reported:
Alpharetta, GA 30009	Project Manager:	Mr. Jim Fineis	19-Feb-16 13:05

Notes and Definitions

TIC	Analyte is a Tentatively Identified Compound with an estimated concentration value.
S-11	Surrogate recovery does not meet the method criteria due to the surrogate exceeding the calibration criteria, not due to matrix interference.
QL-1L	The LCS and/or LCSD recoveries fell below the established control specifications for this analyte. Any result for this compound is qualified and should be considered biased low.
QL-1L	The LCS and/or LCSD recoveries fell below the established control specifications for this analyte. Any result for this compound is qualified and should be considered biased low.
E	The concentration indicated for this analyte is an estimated value above the calibration range of the instrument. This value is considered an estimate (CLP E-flag).
LCC	Leak Check Compound
ND	Analyte NOT DETECTED at or above the reporting limit
MDL	Method Detection Limit
%REC	Percent Recovery
RPD	Relative Percent Difference

Appendix

H&P Mobile Geochemistry, Inc. is approved as an Environmental Testing Laboratory and Mobile Laboratory in accordance with the DoD-ELAP and the ISO 17025 programs, certification number L11-175.

H&P is approved by the State of Arizona as an Environmental Testing Laboratory and Mobile Laboratory, certification numbers AZM758 and AZ0779.

H&P is approved by the State of California as an Environmental Laboratory and Mobile Laboratory in conformance with the Environmental Laboratory Accreditation Program (ELAP) for the category of Volatile and Semi-Volatile Organic Chemistry of Hazardous Waste, certification numbers 2740, 2741, 2743, 2744, 2745, 2754 & 2930.

H&P is approved by the State of Florida Department of Health under the National Environmental Laboratory Accreditation Conference (NELAC) certification number E871100.

The complete list of stationary and mobile laboratory certifications along with the fields of testing (FOTs) and analyte lists are available at www.handpmg.com/about/certifications.

H&P Mobile Geochemistry, Inc.
2470 Impala Drive, Carlsbad, CA 92010
& Field Office - Signal Hill, CA
W handpmg.com E info@handpmg.com
P 760.804.9678 F 760.804.9159

VAPOR / AIR Chain of Custody

DATE: 10/1/15
Page 1 of ~~3~~ 4
SN 10/16

Lab Client and Project Information

Lab Client/Consultant:	Atlas Geo-Sampling	Project Name / #:	TERRACON MOUNDSVILLE
Lab Client Project Manager:	Jim Fineis	Project Location:	
Lab Client Address:	120 Nottaway Lane	Report E-Mail(s):	jimfineis@atlas-geo.com
Lab Client City, State, Zip:	Alpharetta, GA 30009		
Phone Number:	770-883-3372		

SN 10/6/15

Sample Receipt (Lab Use Only)

Date Rec'd: 10/6/15	Control #: 150818.02
H&P Project # AG100615-15	
Lab Work Order # E510066/E510067	
Sample Intact: ☒ Yes ☐ No ☐ See Notes Below	
Receipt Gauge ID: 11167	Temp: 15°C
Outside Lab:	
Receipt Notes/Tracking #: 1293TT61874823 9989 1293TT61844821 1754 1293TT61844635 4069 SN 10/6/15	Lab PM Initials: SN

Reporting Requirements	Turnaround Time	Sampler Information
☑ Standard Report ☐ Level III ☐ Level IV	☑ 5-7 day Stnd ☐ 24-Hr Rush	Sampler(s): Jim Fineis
☐ Excel EDD ☐ Other EDD:	☐ 3-day Rush ☐ Mobile Lab	Signature:
☐ CA Geotracker Global ID:	☐ 48-Hr Rush ☐ Other:	Date: 10-1-15

Additional Instructions to Laboratory:

☐ Check if Project Analyte List is Attached

SORBENT TUBE ID'S & SAMPLE VOLUMES ON PAGES 3-4 - SN 10/6/15

SS4, SS13, SS14 Rec'd on use ID 10/12/15

* 400mL Summa x1 + SORBENT TUBE x2 FOR EACH SAMPLE

* Preferred VOC units (please choose one):

☐ µg/L ☒ µg/m³ ☐ ppbv ☐ ppmv

SAMPLE NAME	FIELD POINT NAME (if applicable)	DATE mm/dd/yy	TIME 24hr clock	SAMPLE TYPE Indoor Air (IA), Ambient Air (AA), Subslab (SS), Soil Vapor (SV)	CONTAINER SIZE & TYPE 400mL/1L/6L Summa or Tedlar or Tube	CONTAINER ID (###)	Lab use only: Receipt Vac	VOCs Standard Full List ☐ 8260SV ☒ TO-15	VOCs Short List / Project List ☐ 8260SV ☐ TO-15	Oxygenates ☐ 8260SV ☐ TO-15	Naphthalene ☒ 8260SV ☒ TO-17m	TPHv as Gas ☐ 8260SVm ☐ TO-15m	TPHv as Diesel (sorbent tube) ☒ TO-17m	Aromatic/Aliphatic Fractions ☐ 8260SVm ☐ TO-15m	Leak Check Compound ☐ DFA ☐ IPA ☐ He	Methane by EPA 8015m	Fixed Gases by ASTM D1945 ☐ CO2 ☐ O2 ☐ N2			
SS1	072	10/01/15	1005	SS	400mL S	039	-.79	X			X		2							
SS2	192	10/01/15	1049	SS	400mL S	110	-.58	X					2							
SS3	031	10/01/15	1119	SS	400mL S	364	-.51	X					2							
SS4 *	193	10/01/15	1200	SS	400mL S	358	-.39	X					2							
SS12	251	10/01/15	1239	SS	400mL S	620	-.89	X					2							
SS13 *	200	10/01/15	1304	SS	400mL S	072	-.49	X					2							
SS14 *	067	10/01/15	1384	SS	400mL S	334	-.61	X					2							
SS6	177	10/1/15	1403	SS	400mL S	139	-.81	X					2							
SS5	128	10/1/15	1427	SS	400mL S	306	-.29	X					2							
SS7	250	10/1/15	1503	SS	400mL S	151	-.49	X					2							

Approved/Relinquished by:	Company:	Date:	Time:	Received by:	Company:	Date:	Time:
	AP	10-2-15	1605	Jori Unsworth	H&P	10/6/15	1030
Approved/Relinquished by:	Company:	Date:	Time:	Received by:	Company:	Date:	Time:
				Jori Unsworth	H&P	10/12/15	930
Approved/Relinquished by:	Company:	Date:	Time:	Received by:	Company:	Date:	Time:

*Approval constitutes as authorization to proceed with analysis and acceptance of conditions on back

Rev 12/31/2013

H&P Mobile Geochemistry, Inc.
2470 Impala Drive, Carlsbad, CA 92010
& Field Office - Signal Hill, CA
W handpmg.com E info@handpmg.com
P 760.804.9678 F 760.804.9159

VAPOR / AIR Chain of Custody

DATE: 10/1/15
Page 2 of ~~3~~ 4
SN 10/6

Lab Client and Project Information

Lab Client/Consultant:	Atlas Geo-Sampling
Lab Client Project Manager:	Jim Fineis
Lab Client Address:	120 Nottaway Lane
Lab Client City, State, Zip:	Alpharetta, GA 30009
Phone Number:	770-883-3372
Project Name / #:	TERRACON MOLLENDAVILLE SN 10/6/15
Project Location:	
Report E-Mail(s):	jimfineis@atlas-geo.com

Sample Receipt (Lab Use Only)

Date Rec'd: 10/6/15	Control #: K50818.02
H&P Project #	AG100615-15
Lab Work Order #	E510066/E510067
Sample Intact: ☒ Yes ☐ No ☐ See Notes Below	
Receipt Gauge ID: 11167	Temp: 15°C
Outside Lab:	
Receipt Notes/Tracking #: 1793TT61874823 9989 SN 10/6/15	Lab PM Initials: SN

Reporting Requirements

☑ Standard Report ☐ Level III ☐ Level IV
☐ Excel EDD ☐ Other EDD: ____
☐ CA Geotracker Global ID: ____

Turnaround Time

☑ 5-7 day Stnd ☐ 24-Hr Rush
☐ 3-day Rush ☐ Mobile Lab
☐ 48-Hr Rush ☐ Other: ____

Sampler Information

Sampler(s): Jim Fineis
Signature:
Date: 10-1-15

Additional Instructions to Laboratory:

TRIP BLANK ADDED - SN 10/8/15

☐ Check if Project Analyte List is Attached

* Preferred VOC units (please choose one):
☐ µg/L ☒ µg/m³ ☐ ppbv ☐ ppmv

* 400mL Summa x1 + SORBENT TUBE x2 FOR EACH SAMPLE

SAMPLE NAME	~~FIELD POINT NAME~~ FLOW ID (if applicable)	DATE mm/dd/yy	TIME 24hr clock	SAMPLE TYPE Indoor Air (IA), Ambient Air (AA), Subslab (SS), Soil Vapor (SV)	CONTAINER SIZE & TYPE 400mL/1L/6L Summa or Tedlar or Tube	CONTAINER ID (###)	Lab use only: Receipt Vac	VOCs Standard Full List ☐ 8260SV ☑ TO-15	VOCs Short List / Project List ☐ 8260SV ☐ TO-15	Oxygenates ☐ 8260SV ☐ TO-15	Naphthalene ☒ 8260SV ☒ TO-15 ☐ TO-17m	TPHv as Gas ☐ 8260SVm ☐ TO-15m	~~TPHv as Diesel (sorbent tube)~~ ☒ TO-17m DICYCLOPENTADIENE	Aromatic/Aliphatic Fractions ☐ 8260SVm ☐ TO-15m	Leak Check Compound ☐ DFA ☐ IPA ☐ He	Methane by EPA 8015m	Fixed Gases by ASTM D1945 ☐ CO2 ☐ O2 ☐ N2			
SS8	~~2260~~	10/1/15	1533	SS	400mL S	~~054~~	-1.32	X			⊗		2							
SS9	091	10/1/15	1600	SS	400mL S	006	-.69	X					2							
~~SS10~~	~~222~~	~~10/1/15~~	~~1627~~	~~SS~~	~~400mL S~~	~~170~~		~~X~~					~~2~~							
SS11	245	10/1/15	1647	SS	400mL S	107	-1.53	X			⊗		2							
TRIP BLANK		—	—	TRIP BLANK	SORBENT TUBE								1							

Approved/Relinquished by:	Company:	Date:	Time:	Received by:	Company:	Date:	Time:
[signature]	AA/S	10-2-15	1805	Jon Unswarth	H&P	10/6/15	1030
Approved/Relinquished by:	Company:	Date:	Time:	Received by:	Company:	Date:	Time:
Approved/Relinquished by:	Company:	Date:	Time:	Received by:	Company:	Date:	Time:

*Approval constitutes as authorization to proceed with analysis and acceptance of conditions on back

Rev 12/31/2013

H&P Mobile Geochemistry Inc.

Log Sheet: Soil Vapor Sampling with Sorbent Tube

FMS007
Revision: 2
Revised: 4/9/15
Effective: 4/15/15
~~Page 1 of 1~~
3 OF 4 SN 196

Consultant: Atlas Geo-Sampling
Date: 10/01/15
Site Address: 12982 Cherokee Bend Drive
Page: of
Project #: E1157122
AG100615-15
WO#: E510048

Equipment Info
Inline Gauge ID#:
Pump ID#:

Purge Volume
PV Amount:
PV Includes: ☐ Tubing ☐ Sand_____% ☐ Dry Bent._____%

Leak Check Compound
☐ 1-Butanol ☐ Other_____

	Sample and Sorbent Tube Information						Probe Specs							Purge & Collection Information						
	Point ID	Sorbent Tube ID #	Start Time	End / Sample Time	Total Sample Time (min)	Total Sample Volume (mL)	Probe Depth (ft)	Tubing Length (ft)	Tubing Dia (in.)	Sand Ht (in.)	Sand Dia (in.)	Dry Bent. Ht (in.)	Dry Bent. Dia (in.)	Shut-in Test (sec)	Leak Check (✓)	Purge Vol (mL)	Purge Flow Rate (mL/min)	Pump Time (min:sec)	Sample Flow Rate (mL/min)	Probe Vac (Hg / H_2O)
1	SS1	mi174144	1018	1022	4	1200								60		180				
2	SS1	mi173501	1027	1028	1	240								60		180				
3	SS2	mi174157	1052	1055	3	1200								60		180				
4	SS2	mi194327	1102	1103	1	240								60		180				
5	SS3	mi174132	1123	1125	2	1200								60		180				
6	SS3	mi194323	1129	1130	1	240								60		180				
7	SS4	mi185454	1205	1208	3	1200								60		180				
8	SS4	mi185440	1213	1214	1	240								60		180				
9	SS12	mi185427	1244	1246	2	1200								60		180				
10	SS12	mi185444	1251	1252	1	240								60		180				
11	SS13	mi185458	1309	1311	2	1200								60		180				
12	SS13	mi174136	1317	1318	1	240								60		180				

Site Notes such as weather, visitors, scope deviations, health & safety issues, etc.:
(When making sample specific notes, reference the line number above)

[redacted]

Sheet: Soil Vapor Sampling with Sorbent Tube

FMS007
Revision: 2
Revised: 4/9/15
Effective: 4/15/15
~~Page 1 of 1~~
4 of 4 SW 10/16

H&P Project #: E1157122 Date: 10/1/15

Site Address: 12942 Cherokee Bend Drive Page: of

Consultant: Atlas Geo Sampling H&P Rep(s): Reviewed:

Consultant Rep(s): AG100615-15 WO#: ES10048 Scanned:

Purge Volume

PV Amount Selected: Selected by:

Leak Check Compound:

Procedure:

	Sample and Sorbent Tube Information						Probe Specs							Collection Information				
	Point ID	Sorbent Tube ID #	Start Time	End / Sample Time	Total Sample Time (min)	Total Sample Volume (mL)	Probe Depth (ft)	Tubing Length (ft)	Tubing Dia (in.)	Sand Pack Ht (in.)	Sand Pack Dia (in.)	Dry Bent. Ht (in.)	Dry Bent. Dia (in.)	Purge Vol (mL)	Shut-in Test (✓=Pass)	Flow Rate (mL/min)	Probe Vacuum ("Hg)	Field Notes
1	SS 14	mi185430	1338	1339	1	1200								180	60 ✓			
2	SS 14	mi174141	1343	1344	1	240								180	60 ✓			
3	SS 6	mi185443	1406	1408	2	1200								180	60 ✓			
4	SS 6	mi194322	1412	1413	1	240								180	60 ✓			
5	SS 5	mi185441	1431	1433	2	1200								180	60 ✓			
6	SS 5	mi185448	1437	1438	1	240								180	60 ✓			
7	SS 7	mi174134	1509	1510	1	1200								180	60 ✓			
8	SS 7	mi185422	1518	1519	1	240								180	60 ✓			
9	SS 8	mi185450	1536	1538	2	1200								180	60 ✓			
10	SS 8	mi185461	1542	1543	1	240								180	60 ✓			
11	SS 9	mi174133	1604	1606	2	1200								180	60 ✓			
12	SS 9	mi185437	1610	1610	1	240								180	60 ✓			
13	SS 10	mi194339	1650	1652	2	1200								180	60 ✓			
14	SS 10	mi173491	1659	1659	1	240								180	60 ✓			
15																		

Site Notes (e.g. weather, visitors, scope deviations, health & safety issues, etc.):

Mr. Stephen Howard
Terracon
110 12th Street North
Birmingham, AL 35203

April 18, 2016

DOH ELAP #11626 Account# 25656 Login# L371948
AIHA-LAP #100324

Dear Mr. Howard:

Enclosed are the analytical results for the samples received by our laboratory on April 11, 2016. All test results meet the quality control requirements of AIHA-LAP and NELAC unless otherwise stated in this report. All samples on the chain of custody were received in good condition unless otherwise noted.

Results in this report are based on the sampling data provided by the client and refer only to the samples as they were received at the laboratory. Unless otherwise requested, all samples will be discarded 14 days from the date of this report, with the exception of IOMs, which will be cleaned and disposed of after seven calendar days.

Current Scopes of Accreditation can be viewed at www.galsonlabs.com in the accreditations section under the "about Galson" tab.

Please contact Caroline Hudson at (888) 432-5227, if you would like any additional information regarding this report. Thank you for using SGS Galson Laboratories.

Sincerely,

SGS Galson Laboratories

Lisa Swab
Laboratory Director

Enclosure(s)

Galson Laboratories, Inc. is now a part of SGS, the world's leading inspection, verification, testing, and certification company. As part of our transition to SGS, you will begin to see some formatting changes with reports that will improve the presentation of data and allow for the transition to the new logo.

LABORATORY ANALYSIS REPORT

6601 Kirkville Road
East Syracuse, NY 13057
(315) 432-5227
FAX: (315) 437-0571
www.galsonlabs.com

Client : Terracon
Site : Moundville Biodiesel Facility
Project No. : E1167137
Date Sampled : 07-APR-16
Date Received : 11-APR-16

Account No.: 25656
Login No. : L371948

Date Analyzed : 12-APR-16 - 13-APR-16
Report ID : 931755

1,1-Dichloroethane

Galson ID:			L371948-1		L371948-2		L371948-3	
Client ID:			CR-1 (SN 10504)		LAB 1 (SN 207)		MS-1 (SN 219)	
	LOQ ppmv	LOQ ug/m3	ppmv	ug/m3	ppmv	ug/m3	ppmv	ug/m3
1,1-Dichloroethane	0.0002	0.8	<0.0002	<0.8	<0.0002	<0.8	<0.0002	<0.8
Benzene	0.0002	0.64	0.0021	6.6	0.0002	0.7	0.0012	3.9
Trichloroethylene	0.0002	1	<0.0002	<1	<0.0002	<1	<0.0002	<1
Ethylbenzene	0.0002	0.9	<0.0002	<0.9	0.0002	0.9	0.0009	4
m & p-xylene	0.0005	2.2	0.0024	10	0.0005	2	0.0031	13
o-Xylene	0.0002	0.87	<0.0002	<0.9	0.0002	0.9	0.0011	4.8
1,2,4-Trimethylbenzene	0.0002	1	<0.0002	<1	<0.0002	<1	0.0008	4

Analytical Method: mod. OSHA PV2120/mod. EPA TO15; GC/MS
Collection Media : 6L Summa
Submitted by : bhb

QC by : CRD
Approved by : tlh
Date : 18-APR-16

Supervisor: TLH
NYS DOH # : 11626

< -Less Than mg -Milligrams m3 -Cubic Meters ppbv -Parts per Billion Volume NS -Not Specified L -Liters
> -Greater Than ug -Micrograms ND -Not Detected ppmv -Parts per Million Volume LOQ -Limit of Quantitation NA -Not Applicable

LABORATORY ANALYSIS REPORT

6601 Kirkville Road
East Syracuse, NY 13057
(315) 432-5227
FAX: (315) 437-0571
www.galsonlabs.com

Client : Terracon
Site : Moundville Biodiesel Facility
Project No. : E1167137
Date Sampled : 07-APR-16
Date Received : 11-APR-16

Account No.: 25656
Login No. : L371948

Date Analyzed : 12-APR-16 - 13-APR-16
Report ID : 931755

1,1-Dichloroethane

Galson ID: L371948-4
Client ID: OFFICE 1

	LOQ ppmv	LOQ ug/m3	ppmv	ug/m3	ppmv	ug/m3	ppmv	ug/m3
1,1-Dichloroethane	0.0002	0.8	<0.0002	<0.8				
Benzene	0.0002	0.6	<0.0002	<0.6				
Trichloroethylene	0.0002	1	<0.0002	<1				
Ethylbenzene	0.0002	0.9	<0.0002	<0.9				
m & p-xylene	0.0005	2	0.0006	3				
o-Xylene	0.0002	0.9	0.0002	1				
1,2,4-Trimethylbenzene	0.0002	1	<0.0002	<1				

Analytical Method: mod. OSHA PV2120/mod. EPA TO15; GC/MS
Collection Media : 6L Summa
Submitted by : bhb

QC by : CRD
Approved by : tlh
Date : 18-APR-16

Supervisor: TLH
NYS DOH # : 11626

< -Less Than mg -Milligrams m3 -Cubic Meters ppbv -Parts per Billion Volume NS -Not Specified L -Liters
> -Greater Than ug -Micrograms ND -Not Detected ppmv -Parts per Million Volume LOQ -Limit of Quantitation NA -Not Applicable

LABORATORY FOOTNOTE REPORT

6601 Kirkville Road
East Syracuse, NY 13057
(315) 432-5227
FAX: (315) 437-0571
www.galsonlabs.com

Client Name : Terracon
Site : Moundville Biodiesel Facility
Project No. : E1167137

Date Sampled : 07-APR-16 Account No.: 25656
Date Received: 11-APR-16 Login No. : L371948
Date Analyzed: 12-APR-16 - 13-APR-16

This document is issued by the Company under its General Conditions of Service accessible at http://www.sgs.com/en/Terms-and-Conditions.aspx. Attention is drawn to the limitation of liability, indemnification and jurisdiction issues defined therein.

Any holder of this document is advised that information contained herein reflects the Company's findings at the time of its intervention only and within the limits of Client's instructions, if any. The Company's sole responsibility is to its Client and this document does not exonerate parties to a transaction from exercising all their rights and obligations under the transaction documents. Any unauthorized alteration, forgery or falsification of the content or appearance of this document is unlawful and offenders may be prosecuted to the fullest extent of the law.

Unless otherwise noted below, all quality control results associated with the samples were within established control limits or did not impact reported results.

Note: The findings recorded within this report were drawn from analysis of the sample(s) provided to the laboratory by the Client (or a third party acting at the Client's direction). The laboratory does not have control over the sampling process. The findings herein constitute no warranty of the samples' representativeness of any sampled environment and strictly relate to the samples as they were presented to the laboratory.

Unrounded results are carried through the calculations that yield the final result and the final result is rounded to the number of significant figures appropriate to the accuracy of the analytical method. Please note that results appearing in the columns preceeding the final result column may have been rounded and therefore, if carried through the calculations, may not yield an identical final result to the one reported.

The stated LOQs for each analyte represent the demonstrated LOQ concentrations prior to correction for desorption efficiency (if applicable).

Unless otherwise noted below, reported results have not been blank corrected for any field blank or method blank.

L371948 (Report ID: 931755):
SOPs: in-vocs(28)

L371948 (Report ID: 931755):
Accuracy and mean recovery data presented below is based on a 95% confidence interval (k=2).
The estimated uncertainty applies to the media, technology, and SOP referenced in this report and does not account for the uncertainty associated with the sampling process.

Parameter	Accuracy	Mean Recovery
1,1-Dichloroethane	+/-13.6%	99.3%
1,2,4-Trimethylbenzene	+/-29.2%	107%
Benzene	+/-14.5%	104%
Ethylbenzene	+/-16.4%	103%
Trichloroethylene	+/-14.5%	104%
m & p-xylene	+/-20.2%	102%
o-Xylene	+/-19.9%	103%

< -Less Than mg -Milligrams m3 -Cubic Meters kg -Kilograms ppm -Parts per Million
> -Greater Than ug -Micrograms l -Liters NS -Not Specified ND -Not Detected NA -Not Applicable

670736993277
Date:04/11/16
Shipper:FEDEX
Initials:SK
Prep:UNKNOWN

L371948

wire cart

GALSON CHAIN OF CUSTODY

☑	Standard	0%
☐	4 Business Days	35%
☐	3 Business Days	50%
☐	2 Business Days	75%
☐	Next Day by 6pm	100%
☐	Next Day by Noon	150%
☐	Same Day	200%

☑ Samples submitted using the FreePumpLoan™ Program

☑ Samples submitted using the FreeSamplingBadges™ Program

Client Acct No.:

Original Prep No.:

Online COC No.: 105711

[NEW] Report To : Stephen Howard
Company Name : Terracon Consultants, Inc.
Address 1 : 110 12th Street North
Address 2 :
City, State Zip : Birmingham, AL 35203
Country : USA
Phone No. : 205 - 443 - 5224
Cell No. : 205 - 903 - 0581
Email reports to : stephen.howard@terracon.com
Comments :

[NEW] Invoice To : Stephen Howard
Company Name : Terracon Consultants, Inc.
Address 1 : 110 12th Street North
Address 2 :
City, State Zip : Birmingham, AL 35203
Country : USA
Phone No. : 205 - 443 - 5224
Email Address : stephen.howard@terracon.com
Comments :
P.O. No. : E1167137
Payment info. : ☐ I will call SGS Galson to provide credit card info
☑ Card on File (enter the last five digits on the line below)

Comments :
Regulators were calibrated for 12-hr. time intake. Canister SN 10504 (regulator WR528) only registered approx. -70 kPa and registered 0 kPa after 5-6 hours. Please report results in ?g / m3 or mg / m3. m,p-xylen, o-xylene
* benzene, 1,1-Dichloroethane, ethylbenzene, trichloroethylene, 124-trimethylbenzene

State Sampled : AL

Please indicate which OEL(s) this data will be used for :
☑ OSHA PEL ☐ ACGIH TLV ☐ MSHA ☐ Cal OSHA
☐ IAQ : _____ Specify Limit(s) ☐ Other : _____ Specify Other

Site Name : Moundville Biodiesel Facility
Project : E1167137
Sampled By : Stephen Howard
List description of industry or Process/interferences present in sampling area : Biodiesel refinery

Sample ID (Maximum of 20 Characters)	Date Sampled	Collection Medium	Sample Volume Sample Time Sample Area	Liters Minutes in², cm², ft²	* Analysis Requested	Method Reference ^	Hexavalent Chromium Process (e.g., welding, plating, painting, etc.)
CR-1 (SN 10504)	4/7/2016	6 L Summa Can	6	L	Volatile Organics (1-3 TO15 list compounds)	mod. OSHA PV2120/mod. EPA TO15; GC/MS	WL122 WR520
LAB 1 (SN 207)	4/7/2016	6 L Summa Can	710	min	Volatile Organics (1-3 TO15 list compounds)	mod. OSHA PV2120/mod. EPA TO15; GC/MS	WL221 WR713

☑ ^ If the method(s) indicated on the COC are not our routine/preferred method(s), we will substitute our routine/preferred methods. If this is not acceptable, check here to have us contact you.

Chain of Custody	Print Name / Signature		Date	Time		Print Name / Signature		Date	Time
Relinquished By :	Stephen Howard		4/8/2016	12:43	Received By :				
Relinquished By :					Received By :	M Sam	M Sam	4/11/16	1017

Samples received after 3pm will be considered as next day's business.

Online COC No. : 105711
Prep No. :
Account No. :
Finalized : 4/8/2016 1:43:40 PM

SGS Galson Laboratories | 6601 Kirkville Road East Syracuse, NY 13057, USA t +1 888 432 5227 | +1 315 432 5227 f +1 315 437 0571 www.galsonlabs.com | www.sgs.com

Member of the SGS Group (SGS SA)

Lorie Carl

SGS GALSON CHAIN OF CUSTODY

Comments :

Sample ID (Maximum of 20 Characters)	Date Sampled	Collection Medium	Sample Volume Sample Time Sample Area	Liters Minutes in², cm², ft²	Analysis Requested	Method Reference ^	Hexavalent Chromium Process (e.g., welding, plating, painting, etc.)
MS-1 (SN 219)	4/7/2016	6 L Summa Can	718	min	Volatile Organics (1-3 TO15 list compounds)	mod. OSHA PV2120/mod. EPA TO15; GC/MS	WL213 WL569
OFFICE 1	4/7/2016	6 L Summa Can	712	min	Volatile Organics (1-3 TO15 list compounds)	mod. OSHA PV2120/mod. EPA TO15; GC/MS	WL059 WL433

☑ ^ If the method(s) indicated on the COC are not our routine/preferred method(s), we will substitute our routine/preferred methods. If this is not acceptable, check here to have us contact you.

Chain of Custody	Print Name / Signature		Date	Time		Print Name / Signature		Date	Time
Relinquished By :	Stephen Howard		4/8/2016	12:43	Received By :				
Relinquished By :					Received By :	M Ward	M Ward	4/11/16	1017

Samples received after 3pm will be considered as next day's business.

Online COC No. : 105711
Prep No. :
Account No. :
Finalized : 4/8/2016 1:43:40 PM

SGS Galson Laboratories | 6601 Kirkville Road East Syracuse, NY 13057, USA t +1 888 432 5227 | +1 315 432 5227 f +1 315 437 0571 www.galsonlabs.com | www.sgs.com

Member of the SGS Group (SGS SA)

Mr. Stephen Howard
Terracon
110 12th Street North
Birmingham, AL 35203

April 20, 2016

Account# 25656

Login# L371925

Dear Mr. Howard:

Enclosed are the analytical results for the samples received by our laboratory on April 09, 2016. All test results meet the quality control requirements of AIHA-LAP and NELAC unless otherwise stated in this report. All samples on the chain of custody were received in good condition unless otherwise noted.

The samples submitted for Dicyclopentadiene were subcontracted to Bureau Veritas/Clayton Group Services, Inc. Their report is enclosed in its entirety.

Results in this report are based on the sampling data provided by the client and refer only to the samples as they were received at the laboratory. Unless otherwise requested, all samples will be discarded 14 days from the date of this report, with the exception of IOMs, which will be cleaned and disposed of after seven calendar days.

Current Scopes of Accreditation can be viewed at www.galsonlabs.com in the accreditations section under the "about Galson" tab.

Please contact Caroline Hudson at (888) 432-5227, if you would like any additional information regarding this report. Thank you for using SGS Galson Laboratories.

Sincerely,

SGS Galson Laboratories

Lisa Swab
Laboratory Director

Enclosure(s)

Galson Laboratories, Inc. is now a part of SGS, the world's leading inspection, verification, testing, and certification company. As part of our transition to SGS, you will begin to see some formatting changes with reports that will improve the presentation of data and allow for the transition to the new logo.

LABORATORY ANALYSIS REPORT

6601 Kirkville Road
East Syracuse, NY 13057
(315) 432-5227
FAX: (315) 437-0571
www.galsonlabs.com

Client : Terracon
Site : Moundville Biodiesel Facility
Project No. : E1167137
Date Sampled : 07-APR-16
Date Received : 09-APR-16

Account No.: 25656
Login No. : L371925

Date Analyzed : 13-APR-16
Report ID : 931722

Naphthalene

Sample ID	Lab ID	Filter ug	Front ug	Back ug	Total ug	Conc mg/m3	ppm
16-0078366 (CR)	L371925-6	<0.3	0.4	<0.3	0.5	0.0005	0.0001
16-0078388 (LAB)	L371925-7	<0.3	<0.3	<0.3	<0.3	<0.0003	<0.00007
16-0078385 (MS)	L371925-8	<0.3	<0.3	<0.3	<0.3	<0.0003	<0.00006
16-0078380 (OFFICE)	L371925-9	<0.3	<0.3	<0.3	<0.3	<0.0003	<0.00007
16-0078381 (BLANK)	L371925-10	<0.3	<0.3	<0.3	<0.3	NA	NA
16-0078382 (BLANK)	L371925-11	<0.3	<0.3	<0.3	<0.3	NA	NA
16-0078390 (BLANK)	L371925-12	<0.3	<0.3	<0.3	<0.3	NA	NA

COMMENTS: Please see attached lab footnote report for any applicable footnotes.

Level of quantitation: 0.3 ug
Analytical Method : mod. NIOSH 5506; HPLC/UV
OSHA PEL : 10 ppm (TWA)
Collection Media : Filter & Tube

Submitted by: PGM
Approved by : MWJ
Date : 15-APR-16
Supervisor: MWJ

NYS DOH # : 11626
QC by: CRD

< -Less Than
> -Greater Than
mg -Milligrams
ug -Micrograms
m3 -Cubic Meters
l -Liters
kg -Kilograms
NS -Not Specified
NA -Not Applicable
ppm -Parts per Million
ND -Not Detected

April 18, 2016

Shelly Krause
GALSON LABORATORIES
6601 Kirkville Road
East Syracuse, NY 13057-

Bureau Veritas Work Order No. 16040774

Reference: L371925

Dear Shelly Krause:

Bureau Veritas North America, Inc. received 5 samples on April 12, 2016 for the analyses presented in the following report.

Enclosed is a copy of the Chain-of-Custody record, acknowledging receipt of these samples. Please note that any unused portion of the samples will be discarded 30 days after the date of this report, unless you have requested otherwise.

This material is confidential and is intended solely for the person to whom it is addressed. If this is received in error, please contact the number provided below.

We appreciate the opportunity to assist you. If you have any questions concerning this report, please contact a Client Services Representative at (800) 806-5887.

Sincerely,

Kerri Drew

Client Service Representative
Electronic signature authorized through password protection

Bureau Veritas North America, Inc.
Health, Safety, and Environmental Services
22345 Roethel Drive
Novi, MI 48375
Main: (248) 344.1770
Fax: (248) 344.2655
www.us.bureauveritas.com

CASE NARRATIVE

Date: *18-Apr-16*

CLIENT: GALSON LABORATORIES

Project: L371925

Work Order No 16040774

The results of this report relate only to the samples listed in the body of this report.

Unless otherwise noted below, the following statements apply: 1) all samples were received in acceptable condition, 2) all quality control results associated with this sample set were within acceptable limits and/or do not adversely affect the reported results, and 3) the industrial hygiene results have not been blank corrected.

There are not enough data points to provide statistical information.

ANALYTICAL RESULTS

Date: *18-Apr-16*

Client: GALSON LABORATORIES

Project: L371925 **Work Order No:** 16040774

Sample Identification: 16-0078418 (CR)

Lab Number: 001A **Date Sampled:** 4/7/2016

Sample Type: Charcoal Tube **Date Received:** 4/12/2016

Analyst: ECH **Air Volume (L):** 118

Analyte	Analytical Results (µg)	Analytical Results (mg/m³)	Analytical Results (ppm)	Reporting Limit (µg)	Test Method	Date Analyzed
Dicyclopentadiene	3.6	0.031	0.0057	2	OSHA 7	04/15/2016

Sample Identification: 16-0078416 (LAB)

Lab Number: 002A **Date Sampled:** 4/7/2016

Sample Type: Charcoal Tube **Date Received:** 4/12/2016

Analyst: ECH **Air Volume (L):** 122

Analyte	Analytical Results (µg)	Analytical Results (mg/m³)	Analytical Results (ppm)	Reporting Limit (µg)	Test Method	Date Analyzed
Dicyclopentadiene	<2	<0.016	<0.0030	2	OSHA 7	04/15/2016

Sample Identification: 16-0078414 (MS)

Lab Number: 003A **Date Sampled:** 4/7/2016

Sample Type: Charcoal Tube **Date Received:** 4/12/2016

Analyst: ECH **Air Volume (L):** 121

Analyte	Analytical Results (µg)	Analytical Results (mg/m³)	Analytical Results (ppm)	Reporting Limit (µg)	Test Method	Date Analyzed
Dicyclopentadiene	14	0.12	0.022	2	OSHA 7	04/15/2016

ANALYTICAL RESULTS

Date: *18-Apr-16*

Client: GALSON LABORATORIES

Project: L371925 **Work Order No:** 16040774

Sample Identification: 16-0078408 (OFFICE)

Lab Number: 004A **Date Sampled:** 4/7/2016

Sample Type: Charcoal Tube **Date Received:** 4/12/2016

Analyst: ECH **Air Volume (L):** 122

Analyte	Analytical Results (µg)	Analytical Results (mg/m³)	Analytical Results (ppm)	Reporting Limit (µg)	Test Method	Date Analyzed
Dicyclopentadiene	<2	<0.016	<0.0030	2	OSHA 7	04/15/2016

Sample Identification: 16-0018420 (BLANK)

Lab Number: 005A **Date Sampled:** 4/7/2016

Sample Type: Charcoal Tube **Date Received:** 4/12/2016

Analyst: ECH **Air Volume (L):** NA

Analyte	Analytical Results (µg)	Analytical Results (mg/m³)	Analytical Results (ppm)	Reporting Limit (µg)	Test Method	Date Analyzed
Dicyclopentadiene	<2	--	--	2	OSHA 7	04/15/2016

General Notes:
<: Less than the indicated reporting limit (RL).
--: Information not available or not applicable.
Back sections (if applicable) were checked and showed no significant breakthrough unless otherwise noted.

ILF4 Ver: 3 Approval Date: 01/07/2008 Approval By: wferro

16046774

GALSON LABORATORIES

6601 Kirkville Rd
East Syracuse, NY 13057-9672
Tel: 315-437-5227
888-432-LABS(5227)
Fax: 315-437-0571
www.galsonlabs.com

BV - Novi

Check if change of address ☐

New Client ? yes ☐ no ☐

Report To : **Shelly Krause**
SGS Galson Laboratory
6601 Kirkville Road
East Syracuse, NY 13057
Phone No. : 888-432-5227

Invoice To : **Jeanne Glisson**
SGS Galson Laboratory
6601 Kirkville Road
East Syracuse, NY 13057
Phone No. : 888-432-5227
Fax No. 315-437-0571

Site Name : **Project :** L371925 **Sampled By :** Client

Need Results By:	(surcharge)
☑ Standard	0%
☐ 4 Business Days	35%
☐ 3 Business Days	50%
☐ 2 Business Days	75%
☐ Next Day by 6pm	100%
☐ Next Day by Noon	150%
☐ Same day	200%

Verbal Authorization :
Purchase Order No. : 25656
Credit Card No. : Card Holder Name : Exp. :

Fax Results To : Email Only Please Fax No. : Email Only Please
Email Results To : Syracuse.Subcontracting@sgs.com

Sample Identification	Date Sampled	Collection Medium	*Air Volume (liters)/ Passive Monitors (Min)	Analysis Requested	Method Reference	Specific DL Needed
16-0078418 (CR)	4/7/2016	226-01	118.	Dicyclopentadiene	OSHA 07; GC/FID	
16-0078416 (LAB)	4/7/2016	226-01	122.	Dicyclopentadiene	OSHA 07; GC/FID	
16-0078414 (MS)	4/7/2016	226-01	121.	Dicyclopentadiene	OSHA 07; GC/FID	
16-0078408 (OFFICE)	4/7/2016	226-01	122.	Dicyclopentadiene	OSHA 07; GC/FID	
16-0018420 (BLANK)	4/7/2016	226-01	BLANK	Dicyclopentadiene	OSHA 07; GC/FID	

COMMENTS:

If the method being reported is not on your laboratory's current AIHA scope of accreditation, please state that in your report.
Please provide an uncertainty statement in accordance with AIHA LQAP policy document Section 2A.5.4.3. Need results by **04/19/16. Rush charges are not authorized.**

Chain of Custody	Print Name	Signature	Date/Time
Relinquished by :	Michelle Groth	Michelle Groth	4/11/2016 9:39
Received by LAB :	Dennis Rescator	Dennis Rescator	4-12-16 11:36

L371925

125-127

SGS GALSON CHAIN OF CUSTODY

Turn Around Time (TAT):	(surcharge)
☑ Standard	0%
☐ 4 Business Days	35%
☐ 3 Business Days	50%
☐ 2 Business Days	75%
☐ Next Day by 6pm	100%
☐ Next Day by Noon	150%
☐ Same Day	200%

☑ Samples submitted using the FreePumpLoan™ Program

☑ Samples submitted using the FreeSamplingBadges™ Program

Client Acct No.:

Original Prep No.:

Online COC No.: 105713

[NEW] Report To : Stephen Howard
Company Name : Terracon Consultants, Inc.
Address 1 : 110 12th Street North
Address 2 :
City, State Zip : Birmingham, AL 35203
Country : USA
Phone No. : 205 - 443 - 5224
Cell No. : 205 - 903 - 0581
Email reports to : stephen.howard@terracon.com
Comments :

[NEW] Invoice To : Stephen Howard
Company Name : Terracon Consultants, Inc.
Address 1 : 110 12th Street North
Address 2 :
City, State Zip : Birmingham, AL 35203
Country : USA
Phone No. : 205 - 443 - 5224
Email Address : stephen.howard@terracon.com
Comments :
P.O. No. : E1167137
Payment info. : ☐ I will call SGS Galson to provide credit card info
☑ Card on File (enter the last five digits on the line below)

Samples Received in Light Sensitve Material: Yes or No

Comments :
Results needed in mg / m3. Dicyclopentadiene analysis to be subbed out to BV for lower DL (0.00031ppm / 0.00168 mg/m3). Assay N521 badges to be analyzed for: Benzene; 1,1-Dichloroethane; Dicyclopentadiene; Ethylbenzene; Naphthalene; Trichloroethylene; 1,2,4-Trimethylbenzene; m,p-Xylene; and o-Xylene.

State Sampled : AL

Please indicate which OEL(s) this data will be used for :
☑ OSHA PEL ☐ ACGIH TLV ☐ MSHA ☐ Cal OSHA
☐ IAQ : _____ Specify Limit(s) ☐ Other : _____ Specify Other

Site Name : Moundville Biodiesel Facility
Project : E1167137
Sampled By : Stephen Howard
List description of industry or Process/interferences present in sampling area : Biodiesel Refinery

Sample ID (Maximum of 20 Characters)	Date Sampled	Collection Medium	Sample Volume Sample Time Sample Area	Liters Minutes in², cm², ft²	Analysis Requested	Method Reference ^	Hexavalent Chromium Process (e.g., welding, plating, painting, etc.)
16-0078418 (CR)	4/7/2016	Sm. Charcoal Tubes/226-01	118	L	Dicyclopentadiene	mod. OSHA PV2098; GC/FID	
16-0078416 (LAB)	4/7/2016	Sm. Charcoal Tubes/226-01	122	L	Dicyclopentadiene	mod. OSHA PV2098; GC/FID	
16-0078414 (MS)	4/7/2016	Sm. Charcoal Tubes/226-01	121	L	Dicyclopentadiene	mod. OSHA PV2098; GC/FID	

☑ ^ If the method(s) indicated on the COC are not our routine/preferred method(s), we will substitute our routine/preferred methods. If this is not acceptable, check here to have us contact you.

Chain of Custody	Print Name / Signature		Date	Time		Print Name / Signature		Date	Time
Relinquished By :	Stephen Howard		4/8/2016	14:17	Received By :	Michelle Groth		4/9/16	0952
Relinquished By :					Received By :				

Samples received after 3pm will be considered as next day's business.

Online COC No. : 105713
Prep No. :
Account No. :
Finalized : 4/8/2016 3:17:47 PM

SGS Galson Laboratories | 6601 Kirkville Road East Syracuse, NY 13057, USA t +1 888 432 5227 | +1 315 432 5227 f +1 315 437 0571 www.galsonlabs.com | www.sgs.com

Member of the SGS Group (SGS SA)

SGS GALSON CHAIN OF CUSTODY

DSA_0261.jpg DSA_0260.jpg

Comments :
* Tube broken. Media intact. Mg 4/9/16

Sample ID (Maximum of 20 Characters)	Date Sampled	Collection Medium	Sample Volume Sample Time Sample Area	Liters Minutes in², cm², ft²	Analysis Requested	Method Reference ^	Hexavalent Chromium Process (e.g., welding, plating, painting, etc.)
16-0078408 (OFFICE)	4/7/2016	Sm. Charcoal Tubes/226-01	122	L	Dicyclopentadiene	mod. OSHA PV2098; GC/FID	
16-0018420 (BLANK)	4/7/2016	Sm. Charcoal Tubes/226-01	N/A (BLANK)	N/A	Dicyclopentadiene	mod. OSHA PV2098; GC/FID	
16-0078366 (CR)	4/7/2016	37mm 2 um UW PTFE, 2pc Orbo 43 Filter	964	L	Naphthalene		
* 16-0078388 (LAB)	4/7/2016	37mm 2um PW PTFE, 2pc	952	L	napthalene	N5506	
16-0078385 (MS)	4/7/2016	37mm 2um PW PTFE, 2pc	975	L	napthalene	N5506	
16-0078380 (OFFICE)	4/7/2016	37mm 2um PW PTFE, 2pc	954	L	naphthalene	N5506	
16-0078381 (BLANK)	4/7/2016	37mm 2 um UW PTFE, 2pc	N/A (BLANK)	N/A	naphthalene	N5506	
16-0078382 (BLANK)	4/7/2016	37mm 2um PW PTFE, 2pc	N/A (BLANK)	N/A	napthalene	N5506	
16-0078390 (BLANK)	4/7/2016	37mm 2um PW PTFE, 2pc	N/A (BLANK)	N/A	naphthalene	N5506	
16-0078396 (LP1553)	4/7/2016	Assay N521 (Specify 1 or 2 sides)	481	min	See COC general comments	mod. NIOSH 1501; GC/FID BADGE	
16-0078391 (LP2697)	4/7/2016	Assay N521 (Specify 1 or 2 sides)	487	min	See COC general comments	mod. NIOSH 1501; GC/FID BADGE	
16-0078395 (LP2700)	4/7/2016	Assay N521 (Specify 1 or 2 sides)	489	min	See COC general comments	mod. NIOSH 1501; GC/FID BADGE	
16-0078393 (LP1983)	4/7/2016	Assay N521 (Specify 1 or 2 sides)	484	min	See COC general comments	mod. NIOSH 1501; GC/FID BADGE	
16-0078397 (LP1623)	4/7/2016	Assay N521 (Specify 1 or 2 sides)	15	min	See COC general comments	mod. NIOSH 1501; GC/FID BADGE	

☑ ^ If the method(s) indicated on the COC are not our routine/preferred method(s), we will substitute our routine/preferred methods. If this is not acceptable, check here to have us contact you.

Chain of Custody	Print Name / Signature		Date	Time		Print Name / Signature		Date	Time
Relinquished By :	Stephen Howard		4/8/2016	14:17	Received By :	Michelle Groth	mgroth	4/9/16	0952
Relinquished By :					Received By :				

Samples received after 3pm will be considered as next day's business.

Online COC No. : 105713
Prep No. :
Account No. :
Finalized : 4/8/2016 3:17:47 PM

SGS Galson Laboratories | 6601 Kirkville Road East Syracuse, NY 13057, USA t +1 888 432 5227 | +1 315 432 5227 f +1 315 437 0571 www.galsonlabs.com | www.sgs.com

Member of the SGS Group (SGS SA)

SGS GALSON CHAIN OF CUSTODY

Comments :

Sample ID (Maximum of 20 Characters)	Date Sampled	Collection Medium	Sample Volume Sample Time Sample Area	Liters Minutes in², cm², ft²	Analysis Requested	Method Reference ^	Hexavalent Chromium Process (e.g., welding, plating, painting, etc.)
16-0078399 (LP2802)	4/7/2016	Assay N521 (Specify 1 or 2 sides)	15	min	See COC general comments	mod. NIOSH 1501; GC/FID BADGE	
16-0078398 (LP1450)	4/7/2016	Assay N521 (Specify 1 or 2 sides)	15	min	see COC general comments	mod. NIOSH 1501; GC/FID BADGE	
16-0078400 (LP2289)	4/7/2016	Assay N521 (Specify 1 or 2 sides)	15	min	See COC general comments	mod. NIOSH 1501; GC/FID BADGE	
16-0078392 (LP2453)	4/7/2016	Assay N521 (Specify 1 or 2 sides)	N/A (BLANK)	N/A	See COC general comments	mod. NIOSH 1501; GC/FID BADGE	

☑ ^ If the method(s) indicated on the COC are not our routine/preferred method(s), we will substitute our routine/preferred methods. If this is not acceptable, check here to have us contact you.

Chain of Custody	Print Name / Signature		Date	Time		Print Name / Signature		Date	Time
Relinquished By :	Stephen Howard		4/8/2016	14:17	Received By :	Michelle Groth	mgroth	4/9/16	0952
Relinquished By :					Received By :				

Samples received after 3pm will be considered as next day's business.

Online COC No. : 105713
Prep No. :
Account No. :
Finalized : 4/8/2016 3:17:47 PM

SGS.Galson Laboratories | 6601 Kirkville Road East Syracuse, NY 13057, USA t +1 888 432 5227 | +1 315 432 5227 f +1 315 437 0571 www.galsonlabs.com | www.sgs.com

Member of the SGS Group (SGS SA)

APPENDIX C

ALABAMA RISK-BASED CORRECTIVE ACTION (ARBCA) COMPUTATIONAL SOFTWARE

Developed to be consistent with:
Alabama Risk-Based Corrective Action Guidance Manual
April 2008

CONTINUE *Version 2.1, May 2009.* **EXIT**

Developed by:
Risk Assessment and Management (RAM) Group, Inc.
5433 Westheimer, Suite 725, Houston, TX 77056.
Ph: (713) 784-5151
Fax: (713) 784-6105
www.ramgp.com

ALABAMA RISK-BASED CORRECTIVE ACTION (ARBCA) COMPUTATIONAL SOFTWARE

TITLE

SITE INFORMATION

MAIN MENU

SITE No.	VCP Site No. 461-125-117
SITE NAME	Former Eastman Chemical site
ADDRESS	12982 Cherokee Bend Drive
	Moundville, Tuscaloosa County, Alabama

CONTACT NAME	Mr. Rob McNaughton
TELEPHONE NO.	

For exclusive use by Gallet & Associates

SITE: VCP Site No. 461-125

USER-SPECIFIED CHEMICALS OF CONCERN & PROPERTIES
PHYSICAL AND CHEMICAL PROPERTIES

Chemicals	CAS #	MCL [mg/L]	Molecular Weight (MW) [g/g-mol]	Water Solubility (S) [mg/L]	Henry's Law Constant (H) [L-water/L-air]	Org. Carbon Adsorption Coeff. (K_{oc}) [cm^3/g]	Soil-Water Partition Coefficient (K_d) [cm^3/g]	Molecular Diffusion Coefficient in air (D^a) [cm^2/s]	Molecular Diffusion Coefficient in water (D^w) [cm^2/s]
Dicyclopentadiene	77-73-6		130	26	2.6	1500		0.056	0.0000078
Ethylbenzene	100-41-4	0.7	106	170	0.32	360		0.075	0.0000078
Naphthalene	91-20-3		128	31	0.02	1200		0.059	0.0000075
Trichloroethene	79-01-6	0.005	131	1100	0.42	170	1.87	0.079	0.0000091
1,2,3-Trimethylbenzene	526-73-8		120.19	75.2	0.18	1096		0.0677	0.00000741

TOXICOLOGICAL PROPERTIES

Chemicals	Cancer Group	Slope Factor Oral (SF_o) [kg-day/mg]	Slope Factor Inh. (SF_i) [kg-day/mg]	Reference Dose Oral (RfD_o) [mg/kg-day]	Reference Dose Inh. (RfD_i) [mg/kg-day]	Absorption Factor Dermal (RAF_d) [--]	Absorption Factor Oral (RAF_o) [--]	Bioconcentration Factor in Fish (BCF) [L/kg]
Dicyclopentadiene	V			0.08	0.0000857	0.01	1	
Ethylbenzene	V	0.011	0.0087	0.1	0.29	0.01	1	
Naphthalene	V		0.12	0.02	0.000857	0.01	1	
Trichloroethene	V	0.046	0.01435	0.0005	0.00057	0.01	1	
1,2,3-Trimethylbenzene	V				0.0014	0.01	1	

*Type:
V: Volatile Organic Compounds
S: Semi-Volatile Organic Compounds
P: Pesticides & Herbicides
I: Inorganics

For exclusive use by Gallet & Associates

EXPOSURE MODEL

SITE: VCP Site No. 461-125-117

Source and Exposure Pathways	Resident *	Commercial Worker	Trespasser	Construction Worker **
Air				
Indoor Air	☐	☑	☐	N/A
Outdoor Air	☐	☐	☐	☐
Surficial Soil (0 to 1 ft.)				
Dermal Contact	☐	☑	☐	☑
Ingestion	☐	☑	☐	☑
Outdoor Inhalation of Vapor Emissions	☐	☐	☐	☐
Outdoor Inhalation of Particulates	☐	☑	☐	☑
or				
Combined Pathway: Outdoor Inhalation of vapor emissions and particulates, Ingestion, and Dermal Contact	☐	☐	☐	☐
Subsurface Soil (> 1 ft. to watertable)				
Indoor Inhalation of Vapor Emissions	☐	☐	☐	N/A
Outdoor Inhalation of Vapor Emission	☐	☐	☐	N/A
Soil Vapor				
Indoor Inhalation of Vapor Emissions	☐	☐	☐	N/A
Outdoor Inhalation of Vapor Emissions	☐	☐	☐	☐
Groundwater (First Encountered Zone)				
Indoor Inhalation of Vapor Emissions	☐	☐	☐	N/A
Outdoor Inhalation of Vapor Emissions	☐	☐	☐	☐
Ingestion	☐	N/A	N/A	N/A

Other Exposure Pathways

Protection of Groundwater Use	☐
Protection of Surface Water	☐
Soil & Groundwater Protective of Indoor Inhalation	
Resident	☐
Commercial Worker	☐
Trespasser	☐

***** Includes calculations for child, and adult.

****** For construction worker, thickness of surficial soil is from ground surface to depth of construction.

N/A Not Applicable

For exclusive use by Gallet & Associates

SITE: VCP Site No. 461-125-117 **TARGET RISK**

Parameter	Symbol	Default Value	Value Used	Comment
Potential Carcinogenic Health Effects				
Individual Excessive Lifetime Cancer Risk for all chemicals and all exposure pathways	TR_{cum}	1.00E-05	1.00E-05	Default Value
Potential Non-Carcinogenic Health Effects				
Hazard Index for all chemicals and all exposure pathways	HI	1.0	1.0	Default Value

For exclusive use by Gallet & Associates

SITE: VCP Site No. 461-125-117

PHYSICAL AND CHEMICAL PROPERTIES OF CHEMICALS OF CONCERN

Chemicals of Concern	Molecular Weight (MW) [g/g-mol]	Water Solubility (S) [mg/L]	Henry's Law Constant (H) [L-water/L-air]	Org. Carbon Adsorption Coeff. (K_{oc}) [cm^3/g]	Soil-Water Sorption Coeff. Vadose Zone (K_{sv}) [cm^3-water /g-soil]	Soil-Water Sorption Coeff. Saturated zone (K_{SS}) [cm^3 /g]	Molecular Diffusion Coefficient in air (D^a) [cm^2/s]	Molecular Diffusion Coefficient in water (D^w) [cm^2/s]	Saturated Soil Concentration [mg/kg]
Benzene	7.81E+01	1.80E+03	2.30E-01	5.90E+01	6.84E-01	6.84E-01	8.80E-02	9.80E-06	1.57E+03
1,1 -Dichloroethane	9.90E+01	5.10E+03	2.30E-01	3.20E+01	3.71E-01	3.71E-01	7.42E-02	1.10E-05	2.85E+03
Styrene	1.04E+02	3.10E+02	1.10E-01	7.80E+02	9.05E+00	9.05E+00	7.10E-02	8.00E-06	2.86E+03
1 ,2,4-Trimethylbenzene	1.20E+02	5.70E+01	2.30E-01	3.70E+03	4.29E+01	4.29E+01	6.54E-02	7.10E-06	2.46E+03
1 ,3,5-Trimethylbenzene	1.20E+02	4.80E+01	3.20E-01	8.20E+02	9.51E+00	9.51E+00	6.02E-02	7.10E-06	4.66E+02
Xylenes (Total)	NA	1.60E+02	3.00E-01	4.10E+02	4.76E+00	4.76E+00	7.14E-02	7.80E-06	7.92E+02
Arsenic	7.49E+01	0.00E+00	NA	2.90E+01	3.36E-01	3.36E-01	2.95E-01	3.25E-05	0.00E+00
Dicyclopentadiene	1.30E+02	2.60E+01	2.60E+00	1.50E+03	1.74E+01	1.74E+01	5.60E-02	7.80E-06	4.65E+02
Ethylbenzene	1.06E+02	1.70E+02	3.20E-01	3.60E+02	4.18E+00	4.18E+00	7.50E-02	7.80E-06	7.43E+02
Naphthalene	1.28E+02	3.10E+01	2.00E-02	1.20E+03	1.39E+01	1.39E+01	5.90E-02	7.50E-06	4.37E+02
Trichloroethene	1.31E+02	1.10E+03	4.20E-01	1.70E+02	1.97E+00	1.97E+00	7.90E-02	9.10E-06	2.40E+03
1,2,3-Trimethylbenzene	1.20E+02	7.52E+01	1.80E-01	1.10E+03	1.27E+01	1.27E+01	6.77E-02	7.41E-06	9.70E+02

NA: Not Available

The values in red are calculated.

For exclusive use by Gallet & Associates

SITE: VCP Site No. 461-125-117

TOXICOLOGICAL PROPERTIES OF CHEMICALS OF CONCERN

Chemicals of Concern	Slope Factor		Reference Dose		Absorption Factor	
	Oral (SF_o) [kg-day/mg]	Inh. (SF_i) [kg-day/mg]	Oral (RfD_o) [mg/kg-day]	Inh. (RfD_i) [mg/kg-day]	Oral (RAF_o) [--]	Dermal (RAF_d) [--]
Benzene	5.50E-02	2.73E-02	4.00E-03	8.57E-03	1	0.01
1,1 -Dichloroethane	NA	NA	1.00E-01	1.43E-01	1	0.01
Styrene	NA	NA	2.00E-01	2.86E-01	1	0.01
1 ,2,4-Trimethylbenzene	NA	NA	5.00E-02	1.70E-03	1	0.01
1 ,3,5-Trimethylbenzene	NA	NA	5.00E-02	1.70E-03	1	0.01
Xylenes (Total)	NA	NA	2.00E-01	2.86E-02	1	0.01
Arsenic	1.50E+00	1.51E+01	3.00E-04	2.85E-04	1	0.001
Dicyclopentadiene	NA	NA	8.00E-02	8.57E-05	1	0.01
Ethylbenzene	1.10E-02	8.70E-03	1.00E-01	2.90E-01	1	0.01
Naphthalene	NA	1.20E-01	2.00E-02	8.57E-04	1	0.01
Trichloroethene	4.60E-02	1.44E-02	5.00E-04	5.70E-04	1	0.01
1,2,3-Trimethylbenzene	NA	NA	NA	1.40E-03	1	0.01

NA: Not Available

For exclusive use by Gallet & Associates

SITE: VCP Site No. 461-125-117 **EXPOSURE FACTORS**

(Page 1 of 2)

Parameter	Symbol	Unit	Default Value	Value Used	Comment
Averaging Time for Carcinogen	AT_c	year	70	70	Default Value
Averaging Time for Non-Carcinogen	AT_n	year	=ED	=ED	Default Value
Body Weight:					
Resident Child	BW	kg	15	15	Default Value
Resident Adult	BW	kg	70	70	Default Value
Trespasser	BW	kg	45	45	Default Value
Commercial Worker	BW	kg	70	70	Default Value
Construction Worker	BW	kg	70	70	Default Value
Exposure Duration:					
Resident Child	ED	year	6	6	Default Value
Resident Adult	ED	year	30	30	Default Value
Trespasser	ED	year	10	10	Default Value
Commercial Worker	ED	year	25	25	Default Value
Construction Worker	ED	year	1	1	Default Value
Exposure Frequency:					
Resident Child	EF	day/year	350	350	Default Value
Resident Adult	EF	day/year	350	350	Default Value
Trespasser	EF	day/year	350	350	Default Value
Commercial Worker	EF	day/year	250	250	Default Value
Construction Worker	EF	day/year	250	250	Default Value
Soil Ingestion Rate:					
Resident Child	IRS	mg/day	200	200	Default Value
Resident Adult	IRS	mg/day	100	100	Default Value
Trespasser	IRS	mg/day	100	100	Default Value
Commercial Worker	IRS	mg/day	75	50	Site-Specific Value
Construction Worker	IRS	mg/day	177	177	Default Value
Water Ingestion Rate:					
Resident Child	IRW	L/day	1	1	Default Value
Resident Adult	IRW	L/day	2	2	Default Value
Hourly Indoor Inhalation Rate:					
Resident Child	IR_{ai}	m^3/hr	0.5	0.500	Default Value
Resident Adult	IR_{ai}	m^3/hr	0.833	0.833	Default Value
Trespasser	IR_{ai}	m^3/hr	1.5	1.500	Default Value
Commercial Worker	IR_{ai}	m^3/hr	1.5	1.500	Default Value
Construction Worker	IR_{ai}	m^3/hr	1.5	1.500	Default Value
Exposure Time for Indoor Inhalation:					
Resident Child	ET_{in}	hr/day	24	24	Default Value
Resident Adult	ET_{in}	hr/day	24	24	Default Value
Trespasser	ET_{in}	hr/day	24	24	Default Value
Commercial Worker	ET_{in}	hr/day	10	10	Default Value
Construction Worker	ET_{in}	hr/day	10	10	Default Value
Daily Indoor Inhalation Rate:					
Resident Child	IR_{ai_d}	m^3/day	12.0	12.0	Calculated
Resident Adult	IR_{ai_d}	m^3/day	20.0	20.0	Calculated
Trespasser	IR_{ai_d}	m^3/day	36.0	36.0	Calculated
Commercial Worker	IR_{ai_d}	m^3/day	15.0	15.0	Calculated
Construction Worker	IR_{ai_d}	m^3/day	15.0	15.0	Calculated

The values in red are calculated.

For exclusive use by Gallet & Associates

Parameter	Symbol	Unit	Default Value	Value Used	Comment
Hourly Outdoor Inhalation Rate:					
Resident Child	IR_{ao}	m^3/hr	0.5	0.500	Default Value
Resident Adult	IR_{ao}	m^3/hr	0.833	0.833	Default Value
Trespasser	IR_{ao}	m^3/hr	1.5	1.500	Default Value
Commercial Worker	IR_{ao}	m^3/hr	1.5	1.500	Default Value
Construction Worker	IR_{ao}	m^3/hr	1.5	1.500	Default Value
Exposure Time for Outdoor Inhalation:					
Resident Child	ET_{out}	hr/day	10	10	Default Value
Resident Adult	ET_{out}	hr/day	10	10	Default Value
Trespasser	ET_{out}	hr/day	10	10	Default Value
Commercial Worker	ET_{out}	hr/day	10	10	Default Value
Construction Worker	ET_{out}	hr/day	10	10	Default Value
Daily Outdoor Inhalation Rate:					
Resident Child	IR_{ao_d}	m^3/day	5.0	5.0	Calculated
Resident Adult	IR_{ao_d}	m^3/day	8.3	8.3	Calculated
Trespasser	IR_{ao_d}	m^3/day	15.0	15.0	Calculated
Commercial Worker	IR_{ao_d}	m^3/day	15.0	15.0	Calculated
Construction Worker	IR_{ao_d}	m^3/day	15.0	15.0	Calculated
Soil to Skin Adherence Factor:					
Resident Child	M	mg/cm^2	0.2	0.2	Default Value
Resident Adult	M	mg/cm^2	0.07	0.07	Default Value
Trespasser	M	mg/cm^2	0.2	0.2	Default Value
Commercial Worker	M	mg/cm^3	0.2	0.2	Default Value
Construction Worker	M	mg/cm^2	0.2	0.2	Default Value
Skin Surface Area for Dermal Contact:					
Resident Child	SA	cm^2/day	2800	2800	Default Value
Resident Adult	SA	cm^2/day	5700	5700	Default Value
Trespasser	SA	cm^2/day	5700	5700	Default Value
Commercial Worker	SA	cm^2/day	5700	5700	Default Value
Construction Worker	SA	cm^2/day	5700	5700	Default Value

The values in red are calculated.

For exclusive use by Gallet & Associates

SITE: VCP Site No. 461-125-117 **FATE AND TRANSPORT PARAMETERS**

Parameter	Symbol	Unit	Default Value	Value Used	Comment
SOIL PARAMETERS:					
Length of soil source area parallel to wind direction	W_a	cm	**	7750	Site-Specific Value
Depth to subsurface soil sources	L_s	cm	30.48	30.48	Default Value
Lower depth of surficial soil zone	d	cm	30.48	30.48	Default Value
Depth to soil vapor measurement	d_{sv}	cm	30.48	30.48	Default Value
VADOSE ZONE:					
Total soil porosity	θ_T	cm^3/cm^3-soil	0.30	0.350	Site-Specific Value
Volumetric water content	θ_{ws}	cm^3/cm^3	0.10	0.20	Site-Specific Value
Volumetric air content	θ_{as}	cm^3/cm^3	0.20	0.15	Calculated
Thickness	h_v	cm	295	1022.66	Calculated
Dry soil bulk density	ρ_s	g/cm^3	1.8	1.256	Site-Specific Value
Fractional organic carbon content	f_{oc}	g-C/g-soil	0.002	0.0116	Site-Specific Value
FOUNDATION/WALL CRACKS:					
Total soil porosity	θ_{Tcrack}	cm^3/cm^3-soil	0.30	0.350	Site-Specific Value
Volumetric water content	θ_{wcrack}	cm^3/cm^3	0.10	0.20	Site-Specific Value
Volumetric air content	θ_{acrack}	cm^3/cm^3	0.20	0.15	Calculated
CAPILLARY FRINGE:					
Total soil porosity	θ_{Tcap}	cm^3/cm^3-soil	0.30	0.400	Site-Specific Value
Volumetric water content	θ_{wcap}	cm^3/cm^3	0.27	0.36	Calculated
Volumetric air content	θ_{acap}	cm^3/cm^3	0.03	0.04	Calculated
Thickness	h_{cap}	cm	5	100	Site-Specific Value
GROUNDWATER PARAMETERS:					
Depth to groundwater	L_{gw}	cm	300	1122.66	Site-Specific Value
Width of GW source perpendicular to GW flow direction	Y	cm	**	33000	Site-Specific Value
Length of GW source parallel to GW flow direction	W	cm	**	38000	Site-Specific Value
Total soil porosity in the saturated zone	θ_{TS}	cm^3/cm^3	0.30	0.35	Site-Specific Value
Dry soil bulk density in the saturated zone	ρ_{ss}	g/cm^3	1.8	1.256	Site-Specific Value
Fractional organic carbon content in the saturated zone	f_{ocs}	g-C/g-soil	0.002	0.0116	Site-Specific Value
Groundwater mixing zone thickness	δ_{gw}	cm	200	200	Default Value
Hydraulic conductivity in the saturated zone	K	cm/year	31536	3153.6	Site-Specific Value
Hydraulic gradient in the saturated zone	i	cm/cm	0.005	0.033	Site-Specific Value
Groundwater darcy velocity	U_{gw}	cm/year	104.07	104.07	Calculated
Infiltration rate	I	cm/year	14.8	13.7	Site-Specific Value
AMBIENT AIR PARAMETERS:					
Breathing zone height	δ_a	cm	200	200	Default Value
Wind speed within the breathing zone	Ua	cm/s	225	317.5	Site-Specific Value
ENCLOSED SPACE PARAMETERS:					
Enclosed Space Air Exchange Rate:					
Residential	ER	1/sec	0.00014	0.00014	Default Value
Trespasser	ER	1/sec	0.00014	0.00014	Default Value
Commercial/construction worker	ER	1/sec	0.00023	0.00023	Default Value
Enclosed Space Volume/Infiltration Area Ratio:					
Residential	L_B	cm	200	200	Default Value
Trespasser	L_B	cm	200	200	Default Value
Commercial/construction worker	L_B	cm	300	300	Default Value
Enclosed Space Foundation or Wall Thickness:					
Residential	L_{crack}	cm	15	15	Default Value
Trespasser	L_{crack}	cm	15	15	Default Value
Commercial/construction worker	L_{crack}	cm	15	15	Default Value
Area Fraction of Cracks in Foundation/Walls:					
Residential	η	cm^2/cm^2	0.01	0.01	Default Value
Trespasser	η	cm^2/cm^2	0.01	0.01	Default Value
Commercial/construction worker	η	cm^2/cm^2	0.01	0.01	Default Value
PARTICULATE EMISSION RATE:					
Residential and commercial	P_e	g/cm^2sec	6.90E-14	6.90E-14	Default Value
Trespasser	P_e	g/cm^2sec	6.90E-09	6.90E-09	Default Value
Construction worker	P_e	g/cm^2sec	6.90E-09	6.90E-09	Default Value
AVERAGING TIME FOR VAPOR FLUX:					
Resident child	τ	sec	1.89E+08	1.89E+08	Calculated
Resident adult	τ	sec	9.46E+08	9.46E+08	Calculated
Trespasser	τ	sec	3.15E+08	3.15E+08	Calculated
Commercial worker	τ	sec	7.88E+08	7.88E+08	Calculated
Construction worker	τ	sec	3.15E+07	3.15E+07	Calculated

****:** The source area (assumed to be square) should be classified as either (i) small (270 yd^2) = (1500 cm X 1500 cm), (ii) medium (1/2 acre) = (4,498 cm X 4,498 cm), or (iii) large (1 acre) = (6,362 cm X 6,362 cm)

The values in red are calculated.

For exclusive use by Gallet & Associates

SITE: VCP Site No. 461-125-117

CHEMICAL-SPECIFIC INPUTS FOR OTHER EXPOSURE PATHWAYS

Chemicals of Concern	MCL	Unsaturated Zone DAF			Half-Life	Concentration Upstream of the Point of Discharge (C_{su})	Bioconcentration Factor in Fish (BCF)	Concentration Protective of Surface Water (Csw)			
		Default Value	Value Used	Comment				Default Value[1]	User-Specified Value	Value Used	Comment
	[mg/L]	[--]	[--]		[days]	[mg/L]	[L/kg]	[mg/L]	[mg/L]	[mg/L]	
Benzene	0.005	2.00E+00	1	Site-Specific			5.20	1.12E-02		1.12E-02	Default
1,1 -Dichloroethane	NA	2.00E+00	1	Site-Specific			NA	NTOX		NTOX	Default
Styrene	0.1	2.00E+00	1	Site-Specific			NA	NTOX		NTOX	Default
1 ,2,4-Trimethylbenzene	NA	2.00E+00	1	Site-Specific			NA	NTOX		NTOX	Default
1 ,3,5-Trimethylbenzene	NA	2.00E+00	1	Site-Specific			NA	NTOX		NTOX	Default
Xylenes (Total)	10	2.00E+00	1	Site-Specific			NA	NTOX		NTOX	Default
Arsenic	0.01	2.00E+00	1	Site-Specific			44.00	1.20E-04		1.20E-04	Default
Dicyclopentadiene	NA	2.00E+00	1	Site-Specific			NA	NTOX		NTOX	Default
Ethylbenzene	0.7	2.00E+00	1	Site-Specific			NA	NTOX		NTOX	Default
Naphthalene	NA	2.00E+00	1	Site-Specific			NA	NTOX		NTOX	Default
Trichloroethene	0.005	2.00E+00	1	Site-Specific			NA	NTOX		NTOX	Default
1,2,3-Trimethylbenzene	NA	2.00E+00	1	Site-Specific			NA	NTOX		NTOX	Default

[1]: The default concentration protective of surface water at the downstream edge of the mixing zone or at point of discharge is calculated based on consumption of water and fish.

NA: Not Available

NTOX: Default value for Csw cannot be calculated since toxicological properties for the COC is not available.

MCL: Maximum Contaminant Levels

For exclusive use by Gallet & Associates

SITE: VCP Site No. 461-125-117 **CLEAN-UP LEVEL CALCULATION**

When the cumulative risk criteria has to be satisfied clean-up levels are not unique. Several different combinations of clean-up levels can satisfy the cumulative risk criteria. Following are two of the many options available:

◉ **Option 1 -** Reduce each of the representative concentrations by the risk reduction factor. Risk reduction factor is the ratio of the calculated site-wide risk to the target cumulative risk.

○ **Option 2 -** Each of the representative concentration is reduced by a factor such that the risk from each COC and each ROE is identical.

For exclusive use by Gallet & Associates

SITE: VCP Site No. 461-125-117 **ABBREVIATIONS**

Parameter	
HI	Hazard Index (sum of hazard quotient)
HQ	Hazard Quotient
IELCR	Individual Excess Lifetime Cancer Risk
M	The concentration is MCL.
N/A	The soil concentration at the source is not applicable since the groundwater concentration has been entered/selected.
NA	Volatilization factor was not calculated due to lack of Henry's law constant
NC	Pathway is not complete.
NCL	The clean-up level is not calculated since the target risk is not exceeded.
NCOC	The risk/clean-up level cannot be calculated since the chemical of concern is not selected/entered.
NCsw	The concentrations cannot be calculated since the conc. protective of surface water (Csw) is not available/entered.
NHL	The DAF/concentration cannot be calculated since the half-life for the COC is not available/entered.
NMZ	No mixing zone
NPCP	The risk/concentration cannot be calculated since the physical and chemical properties for the COC is not available.
NREP	The risk cannot be calculated since the representative concentration is not available/entered.
NTOX	The risk/concentration cannot be calculated since the toxicological properties for the COC is not available.
RM	Risk Management
--	The clean-up level/concentration cannot be calculated for this COC since the input properties is not available/entered.
*	Calculated concentration exceeded saturated soil concentration. Calculated value is shown.
+	Calculated concentration exceeded saturated vapor concentration. Calculated value is shown.
#	Calculated concentration exceeded solubility. Calculated value is shown.
>1E+300	When DAF is greater then >1+300, the concentrations shown is saturated soil concentration for soil and/or solubility for groundwater.

For exclusive use by Gallet & Associates

SITE: VCP Site No. 461-125-1

REPRESENTATIVE CONCENTRATION FOR A COMMERCIAL WORKER

CHEMICALS OF CONCERN	AIR		SURFICIAL SOIL					SUBSURFACE SOIL		SOIL VAPOR		GROUNDWATER	
	Indoor	Outdoor	Dermal Contact	Ingestion	Outdoor Inhalation of Vapor Emissions	Outdoor Inhalation of Particulates	Combined Pathway	Indoor Inhalation of Vapor Emissions	Outdoor Inhalation of Vapor Emissions	Indoor Inhalation of Vapor Emissions	Outdoor Inhalation of Vapor Emissions	Indoor Inhalation of Vapor Emissions	Outdoor Inhalation of Vapor Emissions
	[mg/m^3-air]		[mg/kg]							[mg/m^3]		[mg/L]	
Benzene	6.60E-03		2.82E-01	2.82E-01		2.82E-01		3.31E-01	3.31E-01	3.80E+00	3.80E+00	3.59E-02	3.59E-02
1,1 -Dichloroethane	4.00E-03		2.82E-01	2.82E-01		2.82E-01		3.31E-01	3.31E-01	2.90E+00	2.90E+00	5.00E-04	5.00E-04
Styrene			9.99E-01	9.99E-01		9.99E-01		2.50E+00	2.50E+00	1.20E-02	1.20E-02	1.50E-01	1.50E-01
1 ,2,4-Trimethylbenzene	4.00E-03		2.75E+02	2.75E+02		2.75E+02		3.56E+02	3.56E+02	1.00E+02	1.00E+02	5.80E-01	5.80E-01
1 ,3,5-Trimethylbenzene			9.13E+01	9.13E+01		9.13E+01		5.94E+01	5.94E+01	2.90E+01	2.90E+01	8.65E-02	8.65E-02
Xylenes (Total)	1.78E-02		1.19E+02	1.19E+02		1.19E+02		8.75E+01	8.75E+01	5.76E+02	5.76E+02	6.16E-01	6.16E-01
Arsenic			5.40E+00	5.40E+00		5.40E+00						5.00E-03	5.00E-03
Dicyclopentadiene	1.20E-01		1.84E+02	1.84E+02		1.84E+02		2.44E+02	2.44E+02	6.30E+01	6.30E+01	2.49E-01	2.49E-01
Ethylbenzene	4.00E-03		8.92E+00	8.92E+00		8.92E+00		1.87E+01	1.87E+01	5.10E+02	5.10E+02	1.73E-01	1.73E-01
Naphthalene	5.00E-04		2.19E+02	2.19E+02		2.19E+02		6.09E+02	6.09E+02	2.10E-01	2.10E-01	9.11E-01	9.11E-01
Trichloroethene	5.00E-04		2.82E-01	2.82E-01		2.82E-01		3.31E-01	3.31E-01	1.70E-01	1.70E-01	5.00E-04	5.00E-04
1,2,3-Trimethylbenzene	4.00E-03		1.02E+02	1.02E+02		1.02E+02		1.33E+02	1.33E+02	1.00E+02	1.00E+02	2.46E-01	2.46E-01

Soil concentrations are presented on a dry weight basis.

NA: Not Available

For exclusive use by Gallet & Associates

SITE: VCP Site No. 461-125-117 **REPRESENTATIVE CONCENTRATION FOR A CONSTRUCTION WORKER**

CHEMICALS OF CONCERN	AIR	SOIL UPTO DEPTH OF CONSTRUCTION					SOIL VAPOR	GROUNDWATER
	Outdoor	Dermal Contact	Ingestion	Outdoor Inhalation of Vapor Emissions	Outdoor Inhalation of Particulates	Combined Pathway	Outdoor Inhalation of Vapor Emissions	Outdoor Inhalation of Vapor Emissions
	[mg/m^3-air]	[mg/kg]					[mg/m^3]	[mg/L]
Benzene		3.31E-01	3.31E-01		3.31E-01			
1,1 -Dichloroethane		3.31E-01	3.31E-01		3.31E-01			
Styrene		2.50E+00	2.50E+00		2.50E+00			
1 ,2,4-Trimethylbenzene		3.56E+02	3.56E+02		3.56E+02			
1 ,3,5-Trimethylbenzene		9.13E+01	9.13E+01		9.13E+01			
Xylenes (Total)		1.19E+02	1.19E+02		1.19E+02			
Arsenic		5.40E+00	5.40E+00		5.40E+00			
Dicyclopentadiene		2.44E+02	2.44E+02		2.44E+02			
Ethylbenzene		1.87E+01	1.87E+01		1.87E+01			
Naphthalene		6.09E+02	6.09E+02		6.09E+02			
Trichloroethene		3.31E-01	3.31E-01		3.31E-01			
1,2,3-Trimethylbenzene		1.33E+02	1.33E+02		1.33E+02			

Soil concentrations are presented on a dry weight basis. **NA**: Not Available For exclusive use by Gallet & Associates

SITE: VCP Site No. 461-125-11 **RM-2 IELCR FOR A COMMERCIAL WORKER**

CUMULATIVE 1.47E-06	AIR		SURFICIAL SOIL					SUBSURFACE SOIL		SOIL VAPOR		GROUNDWATER	
CUMULATIVE HI 2.22E-02	Indoor	Outdoor	Dermal Contact	Ingestion	Outdoor Inhalation of Vapor Emissions	Outdoor Inhalation of Particulates	Combined Pathway	Indoor Inhalation of Vapor Emissions	Outdoor Inhalation of Vapor Emissions	Indoor Inhalation of Vapor Emissions	Outdoor Inhalation of Vapor Emissions	Indoor Inhalation of Vapor Emissions	Outdoor Inhalation of Vapor Emissions
CHEMICALS OF CONCERN													
Benzene	9.44E-06	NC	6.18E-10	2.71E-09	NC	3.40E-15	NC	NC	NC	NC	NC	NC	NC
1,1 -Dichloroethane	NTOX	NC	NTOX	NTOX	NC	NTOX	NC	NC	NC	NC	NC	NC	NC
Styrene	NTOX	NC	NTOX	NTOX	NC	NTOX	NC	NC	NC	NC	NC	NC	NC
1 ,2,4-Trimethylbenzene	NTOX	NC	NTOX	NTOX	NC	NTOX	NC	NC	NC	NC	NC	NC	NC
1 ,3,5-Trimethylbenzene	NTOX	NC	NTOX	NTOX	NC	NTOX	NC	NC	NC	NC	NC	NC	NC
Xylenes (Total)	NTOX	NC	NTOX	NTOX	NC	NTOX	NC	NC	NC	NC	NC	NC	NC
Arsenic	NREP	NC	3.23E-08	1.42E-06	NC	3.59E-11	NC	NC	NC	NC	NC	NC	NC
Dicyclopentadiene	NTOX	NC	NTOX	NTOX	NC	NTOX	NC	NC	NC	NC	NC	NC	NC
Ethylbenzene	1.82E-06	NC	3.91E-09	1.71E-08	NC	3.43E-14	NC	NC	NC	NC	NC	NC	NC
Naphthalene	3.15E-06	NC	NTOX	NTOX	NC	1.16E-11	NC	NC	NC	NC	NC	NC	NC
Trichloroethene	3.76E-07	NC	5.17E-10	2.27E-09	NC	1.79E-15	NC	NC	NC	NC	NC	NC	NC
1,2,3-Trimethylbenzene	NTOX	NC	NTOX	NTOX	NC	NTOX	NC	NC	NC	NC	NC	NC	NC
CUMULATIVE RISK													

For exclusive use by Gallet & Associates

SITE: VCP Site No. 461-125-11 **RM-2 HQ FOR A COMMERCIAL WORKER**

CUMULATIVE 1.47E-06	AIR		SURFICIAL SOIL					SUBSURFACE SOIL		SOIL VAPOR		GROUNDWATER	
CUMULATIVE HI 2.22E-02	Indoor	Outdoor	Dermal Contact	Ingestion	Outdoor Inhalation of Vapor Emissions	Outdoor Inhalation of Particulates	Combined Pathway	Indoor Inhalation of Vapor Emissions	Outdoor Inhalation of Vapor Emissions	Indoor Inhalation of Vapor Emissions	Outdoor Inhalation of Vapor Emissions	Indoor Inhalation of Vapor Emissions	Outdoor Inhalation of Vapor Emissions
CHEMICALS OF CONCERN													
Benzene	1.13E-01	NC	7.86E-06	3.45E-05	NC	4.07E-11	NC	NC	NC	NC	NC	NC	NC
1,1 -Dichloroethane	4.11E-03	NC	3.15E-07	1.38E-06	NC	2.44E-12	NC	NC	NC	NC	NC	NC	NC
Styrene	NREP	NC	5.57E-07	2.44E-06	NC	4.32E-12	NC	NC	NC	NC	NC	NC	NC
1 ,2,4-Trimethylbenzene	3.45E-01	NC	6.12E-04	2.69E-03	NC	2.00E-07	NC	NC	NC	NC	NC	NC	NC
1 ,3,5-Trimethylbenzene	NREP	NC	2.04E-04	8.93E-04	NC	6.64E-08	NC	NC	NC	NC	NC	NC	NC
Xylenes (Total)	9.14E-02	NC	6.66E-05	2.92E-04	NC	5.17E-09	NC	NC	NC	NC	NC	NC	NC
Arsenic	NREP	NC	2.01E-04	8.81E-03	NC	2.34E-08	NC	NC	NC	NC	NC	NC	NC
Dicyclopentadiene	2.06E+02	NC	2.57E-04	1.13E-03	NC	2.66E-06	NC	NC	NC	NC	NC	NC	NC
Ethylbenzene	2.02E-03	NC	9.95E-06	4.36E-05	NC	3.80E-11	NC	NC	NC	NC	NC	NC	NC
Naphthalene	8.56E-02	NC	1.22E-03	5.36E-03	NC	3.16E-07	NC	NC	NC	NC	NC	NC	NC
Trichloroethene	1.29E-01	NC	6.29E-05	2.76E-04	NC	6.11E-10	NC	NC	NC	NC	NC	NC	NC
1,2,3-Trimethylbenzene	4.19E-01	NC	NTOX	NTOX	NC	9.03E-08	NC	NC	NC	NC	NC	NC	NC
CUMULATIVE RISK													

For exclusive use by Gallet & Associates

SITE: VCP Site No. 461-125-11 RM-2 CUMULATIVE RISK FOR A COMMERCIAL WORKER

CUMULATIVE 1.47E-06 CUMULATIVE HI 2.22E-02 CHEMICALS OF CONCERN	SUM OF IELCR	SUM OF HQ (HI)
Benzene	3.33E-09	4.24E-05
1,1 -Dichloroethane		1.69E-06
Styrene		3.00E-06
1 ,2,4-Trimethylbenzene		3.30E-03
1 ,3,5-Trimethylbenzene		1.10E-03
Xylenes (Total)		3.59E-04
Arsenic	1.45E-06	9.01E-03
Dicyclopentadiene		1.39E-03
Ethylbenzene	2.11E-08	5.36E-05
Naphthalene	1.16E-11	6.58E-03
Trichloroethene	2.78E-09	3.39E-04
1,2,3-Trimethylbenzene		9.03E-08
CUMULATIVE RISK	1.47E-06	2.22E-02

For exclusive use by Gallet & Associates

SITE: VCP Site No. 461-125-11

RM-2 IELCR FOR A CONSTRUCTION WORKER

CUMULATIVE 4.81E-07	AIR	SOIL UPTO DEPTH OF CONSTRUCTION					SOIL VAPOR	GROUNDWATER
CUMULATIVE HI 5.99E-01	Outdoor	Dermal Contact	Ingestion	Outdoor Inhalation of Vapor Emissions	Outdoor Inhalation of Particulates	Combined Pathway	Outdoor Inhalation of Vapor Emissions	Outdoor Inhalation of Vapor Emissions
CHEMICALS OF CONCERN								
Benzene	NC	2.90E-11	4.50E-10	NC	1.60E-11	NC	NC	NC
1,1 -Dichloroethane	NC	NTOX	NTOX	NC	NTOX	NC	NC	NC
Styrene	NC	NTOX	NTOX	NC	NTOX	NC	NC	NC
1 ,2,4-Trimethylbenzene	NC	NTOX	NTOX	NC	NTOX	NC	NC	NC
1 ,3,5-Trimethylbenzene	NC	NTOX	NTOX	NC	NTOX	NC	NC	NC
Xylenes (Total)	NC	NTOX	NTOX	NC	NTOX	NC	NC	NC
Arsenic	NC	1.29E-09	2.00E-07	NC	1.43E-07	NC	NC	NC
Dicyclopentadiene	NC	NTOX	NTOX	NC	NTOX	NC	NC	NC
Ethylbenzene	NC	3.28E-10	5.09E-09	NC	2.87E-10	NC	NC	NC
Naphthalene	NC	NTOX	NTOX	NC	1.29E-07	NC	NC	NC
Trichloroethene	NC	2.43E-11	3.77E-10	NC	8.39E-12	NC	NC	NC
1,2,3-Trimethylbenzene	NC	NTOX	NTOX	NC	NTOX	NC	NC	NC
CUMULATIVE RISK								

For exclusive use by Gallet & Associates

SITE: VCP Site No. 461-125-11

RM-2 HQ FOR A CONSTRUCTION WORKER

CUMULATIVE 4.81E-07	AIR	SOIL UPTO DEPTH OF CONSTRUCTION					SOIL VAPOR	GROUNDWATER
CUMULATIVE HI 5.99E-01	Outdoor	Dermal Contact	Ingestion	Outdoor Inhalation of Vapor Emissions	Outdoor Inhalation of Particulates	Combined Pathway	Outdoor Inhalation of Vapor Emissions	Outdoor Inhalation of Vapor Emissions
CHEMICALS OF CONCERN								
Benzene	NC	9.23E-06	1.43E-04	NC	4.77E-06	NC	NC	NC
1,1 -Dichloroethane	NC	3.69E-07	5.73E-06	NC	2.86E-07	NC	NC	NC
Styrene	NC	1.39E-06	2.16E-05	NC	1.08E-06	NC	NC	NC
1 ,2,4-Trimethylbenzene	NC	7.95E-04	1.23E-02	NC	2.59E-02	NC	NC	NC
1 ,3,5-Trimethylbenzene	NC	2.04E-04	3.16E-03	NC	6.64E-03	NC	NC	NC
Xylenes (Total)	NC	6.66E-05	1.03E-03	NC	5.17E-04	NC	NC	NC
Arsenic	NC	2.01E-04	3.12E-02	NC	2.34E-03	NC	NC	NC
Dicyclopentadiene	NC	3.40E-04	5.28E-03	NC	3.52E-01	NC	NC	NC
Ethylbenzene	NC	2.09E-05	3.24E-04	NC	7.97E-06	NC	NC	NC
Naphthalene	NC	3.39E-03	5.27E-02	NC	8.78E-02	NC	NC	NC
Trichloroethene	NC	7.38E-05	1.15E-03	NC	7.18E-05	NC	NC	NC
1,2,3-Trimethylbenzene	NC	NTOX	NTOX	NC	1.18E-02	NC	NC	NC
CUMULATIVE RISK								

For exclusive use by Gallet & Associates

SITE: VCP Site No. 461-125-11 RM-2 CUMULATIVE RISK FOR A CONSTRUCTION WORKER

CUMULATIVE 4.81E-07	SUM OF IELCR	SUM OF HQ (HI)
CUMULATIVE HI 5.99E-01		
CHEMICALS OF CONCERN		
Benzene	4.95E-10	1.57E-04
1,1 -Dichloroethane		6.39E-06
Styrene		2.41E-05
1 ,2,4-Trimethylbenzene		3.90E-02
1 ,3,5-Trimethylbenzene		1.00E-02
Xylenes (Total)		1.62E-03
Arsenic	3.45E-07	3.37E-02
Dicyclopentadiene		3.58E-01
Ethylbenzene	5.71E-09	3.53E-04
Naphthalene	1.29E-07	1.44E-01
Trichloroethene	4.09E-10	1.29E-03
1,2,3-Trimethylbenzene		1.18E-02
CUMULATIVE RISK	4.81E-07	5.99E-01

For exclusive use by Gallet & Associates

APPENDIX D

	A	B	C	D	E	F	G	H	I	J	K	L
1	UCL Statistics for Data Sets with Non-Detects											
2												
3	User Selected Options											
4	Date/Time of Computation			2/10/2016 10:27:02 AM								
5	From File			Surficial half NDs.xls								
6	Full Precision			OFF								
7	Confidence Coefficient			95%								
8	Number of Bootstrap Operations			2000								
9												
10	Arsenic											
11												
12	General Statistics											
13	Total Number of Observations					20	Number of Distinct Observations					19
14	Number of Detects					8	Number of Non-Detects					12
15	Number of Distinct Detects					8	Number of Distinct Non-Detects					11
16	Minimum Detect					2.46	Minimum Non-Detect					0.00688
17	Maximum Detect					16.7	Maximum Non-Detect					147.5
18	Variance Detects					21.41	Percent Non-Detects					60%
19	Mean Detects					5.624	SD Detects					4.627
20	Median Detects					4.61	CV Detects					0.823
21	Skewness Detects					2.466	Kurtosis Detects					6.522
22	Mean of Logged Detects					1.533	SD of Logged Detects					0.607
23												
24	Normal GOF Test on Detects Only											
25	Shapiro Wilk Test Statistic					0.658	Shapiro Wilk GOF Test					
26	5% Shapiro Wilk Critical Value					0.818	Detected Data Not Normal at 5% Significance Level					
27	Lilliefors Test Statistic					0.38	Lilliefors GOF Test					
28	5% Lilliefors Critical Value					0.313	Detected Data Not Normal at 5% Significance Level					
29	Detected Data Not Normal at 5% Significance Level											
30												
31	Kaplan-Meier (KM) Statistics using Normal Critical Values and other Nonparametric UCLs											
32	Mean					2.503	Standard Error of Mean					1.012
33	SD					4.015	95% KM (BCA) UCL					4.127
34	95% KM (t) UCL					4.252	95% KM (Percentile Bootstrap) UCL					4.239
35	95% KM (z) UCL					4.167	95% KM Bootstrap t UCL					5.071
36	90% KM Chebyshev UCL					5.538	95% KM Chebyshev UCL					6.913
37	97.5% KM Chebyshev UCL					8.821	99% KM Chebyshev UCL					12.57
38												
39	Gamma GOF Tests on Detected Observations Only											
40	A-D Test Statistic					0.716	Anderson-Darling GOF Test					
41	5% A-D Critical Value					0.722	Detected data appear Gamma Distributed at 5% Significance Level					
42	K-S Test Statistic					0.301	Kolmogrov-Smirnoff GOF					
43	5% K-S Critical Value					0.297	Detected Data Not Gamma Distributed at 5% Significance Level					
44	Detected data follow Appr. Gamma Distribution at 5% Significance Level											
45												
46	Gamma Statistics on Detected Data Only											
47	k hat (MLE)					2.729	k star (bias corrected MLE)					1.789
48	Theta hat (MLE)					2.061	Theta star (bias corrected MLE)					3.144
49	nu hat (MLE)					43.66	nu star (bias corrected)					28.62
50	MLE Mean (bias corrected)					5.624	MLE Sd (bias corrected)					4.205

	A	B	C	D	E	F	G	H	I	J	K	L
51												
52						Gamma Kaplan-Meier (KM) Statistics						
53					k hat (KM)	0.389					nu hat (KM)	15.55
54					Approximate Chi Square Value (15.55, α)	7.647					Adjusted Chi Square Value (15.55, β)	7.211
55					95% Gamma Approximate KM-UCL (use when n>=50)	5.091					95% Gamma Adjusted KM-UCL (use when n<50)	5.399
56												
57						Gamma ROS Statistics using Imputed Non-Detects						
58						GROS may not be used when data set has > 50% NDs with many tied observations at multiple DLs						
59						GROS may not be used when kstar of detected data is small such as < 0.1						
60						For such situations, GROS method tends to yield inflated values of UCLs and BTVs						
61						For gamma distributed detected data, BTVs and UCLs may be computed using gamma distribution on KM estimates						
62					Minimum	0.01					Mean	2.256
63					Maximum	16.7					Median	0.01
64					SD	3.981					CV	1.765
65					k hat (MLE)	0.241					k star (bias corrected MLE)	0.238
66					Theta hat (MLE)	9.355					Theta star (bias corrected MLE)	9.467
67					nu hat (MLE)	9.644					nu star (bias corrected)	9.53
68					MLE Mean (bias corrected)	2.256					MLE Sd (bias corrected)	4.621
69											Adjusted Level of Significance (β)	0.038
70					Approximate Chi Square Value (9.53, α)	3.65					Adjusted Chi Square Value (9.53, β)	3.367
71					95% Gamma Approximate UCL (use when n>=50)	5.889					95% Gamma Adjusted UCL (use when n<50)	6.384
72												
73						Lognormal GOF Test on Detected Observations Only						
74					Shapiro Wilk Test Statistic	0.865					Shapiro Wilk GOF Test	
75					5% Shapiro Wilk Critical Value	0.818					Detected Data appear Lognormal at 5% Significance Level	
76					Lilliefors Test Statistic	0.255					Lilliefors GOF Test	
77					5% Lilliefors Critical Value	0.313					Detected Data appear Lognormal at 5% Significance Level	
78						Detected Data appear Lognormal at 5% Significance Level						
79												
80						Lognormal ROS Statistics Using Imputed Non-Detects						
81					Mean in Original Scale	2.821					Mean in Log Scale	0.553
82					SD in Original Scale	3.67					SD in Log Scale	0.931
83					95% t UCL (assumes normality of ROS data)	4.24					95% Percentile Bootstrap UCL	4.241
84					95% BCA Bootstrap UCL	4.931					95% Bootstrap t UCL	5.803
85					95% H-UCL (Log ROS)	4.613						
86												
87						UCLs using Lognormal Distribution and KM Estimates when Detected data are Lognormally Distributed						
88					KM Mean (logged)	-2.085					95% H-UCL (KM -Log)	3627
89					KM SD (logged)	3.258					95% Critical H Value (KM-Log)	6.654
90					KM Standard Error of Mean (logged)	0.821						
91												
92						DL/2 Statistics						
93					DL/2 Normal						DL/2 Log-Transformed	
94					Mean in Original Scale	9.122					Mean in Log Scale	-0.657
95					SD in Original Scale	20.55					SD in Log Scale	3.215
96					95% t UCL (Assumes normality)	17.07					95% H-Stat UCL	11581
97						DL/2 is not a recommended method, provided for comparisons and historical reasons						
98												
99						Nonparametric Distribution Free UCL Statistics						
100						Detected Data appear Approximate Gamma Distributed at 5% Significance Level						

	A	B	C	D	E	F	G	H	I	J	K	L
101												
102						**Suggested UCL to Use**						
103					95% KM (t) UCL	4.252				95% GROS Adjusted Gamma UCL		6.384
104					95% Adjusted Gamma KM-UCL	5.399						
105												
106					Note: Suggestions regarding the selection of a 95% UCL are provided to help the user to select the most appropriate 95% UCL.							
107					Recommendations are based upon data size, data distribution, and skewness.							
108					These recommendations are based upon the results of the simulation studies summarized in Singh, Maichle, and Lee (2006).							
109					However, simulations results will not cover all Real World data sets; for additional insight the user may want to consult a statistician.							
110												
111	**DCPD**											
112												
113						**General Statistics**						
114					Total Number of Observations	20				Number of Distinct Observations		19
115					Number of Detects	11				Number of Non-Detects		9
116					Number of Distinct Detects	11				Number of Distinct Non-Detects		8
117					Minimum Detect	0.0148				Minimum Non-Detect		0.00267
118					Maximum Detect	309				Maximum Non-Detect		0.00292
119					Variance Detects	8967				Percent Non-Detects		45%
120					Mean Detects	39.15				SD Detects		94.69
121					Median Detects	0.316				CV Detects		2.419
122					Skewness Detects	2.798				Kurtosis Detects		8.007
123					Mean of Logged Detects	-0.235				SD of Logged Detects		3.275
124												
125						**Normal GOF Test on Detects Only**						
126					Shapiro Wilk Test Statistic	0.497				**Shapiro Wilk GOF Test**		
127					5% Shapiro Wilk Critical Value	0.85				Detected Data Not Normal at 5% Significance Level		
128					Lilliefors Test Statistic	0.418				**Lilliefors GOF Test**		
129					5% Lilliefors Critical Value	0.267				Detected Data Not Normal at 5% Significance Level		
130						**Detected Data Not Normal at 5% Significance Level**						
131												
132						**Kaplan-Meier (KM) Statistics using Normal Critical Values and other Nonparametric UCLs**						
133					Mean	21.53				Standard Error of Mean		16.35
134					SD	69.73				95% KM (BCA) UCL		48.09
135					95% KM (t) UCL	49.81				95% KM (Percentile Bootstrap) UCL		51.62
136					95% KM (z) UCL	48.43				95% KM Bootstrap t UCL		463.3
137					90% KM Chebyshev UCL	70.6				95% KM Chebyshev UCL		92.82
138					97.5% KM Chebyshev UCL	123.7				99% KM Chebyshev UCL		184.3
139												
140						**Gamma GOF Tests on Detected Observations Only**						
141					A-D Test Statistic	1.108				**Anderson-Darling GOF Test**		
142					5% A-D Critical Value	0.87				Detected Data Not Gamma Distributed at 5% Significance Level		
143					K-S Test Statistic	0.314				**Kolmogrov-Smirnoff GOF**		
144					5% K-S Critical Value	0.283				Detected Data Not Gamma Distributed at 5% Significance Level		
145						**Detected Data Not Gamma Distributed at 5% Significance Level**						
146												
147						**Gamma Statistics on Detected Data Only**						
148					k hat (MLE)	0.19				k star (bias corrected MLE)		0.199
149					Theta hat (MLE)	206				Theta star (bias corrected MLE)		196.9
150					nu hat (MLE)	4.182				nu star (bias corrected)		4.375

	A	B	C	D	E	F	G	H	I	J	K	L
151					MLE Mean (bias corrected)	39.15				MLE Sd (bias corrected)		87.8
152												
153					Gamma Kaplan-Meier (KM) Statistics							
154					k hat (KM)	0.0954				nu hat (KM)		3.815
155					Approximate Chi Square Value (3.81, α)	0.65				Adjusted Chi Square Value (3.81, β)		0.559
156					95% Gamma Approximate KM-UCL (use when n>=50)	126.4				95% Gamma Adjusted KM-UCL (use when n<50)		147.1
157					Gamma (KM) may not be used when k hat (KM) is < 0.1							
158												
159					Gamma ROS Statistics using Imputed Non-Detects							
160					GROS may not be used when data set has > 50% NDs with many tied observations at multiple DLs							
161					GROS may not be used when kstar of detected data is small such as < 0.1							
162					For such situations, GROS method tends to yield inflated values of UCLs and BTVs							
163					For gamma distributed detected data, BTVs and UCLs may be computed using gamma distribution on KM estimates							
164					Minimum	0.01				Mean		21.54
165					Maximum	309				Median		0.0245
166					SD	71.54				CV		3.322
167					k hat (MLE)	0.146				k star (bias corrected MLE)		0.158
168					Theta hat (MLE)	147.2				Theta star (bias corrected MLE)		136.6
169					nu hat (MLE)	5.853				nu star (bias corrected)		6.309
170					MLE Mean (bias corrected)	21.54				MLE Sd (bias corrected)		54.23
171										Adjusted Level of Significance (β)		0.038
172					Approximate Chi Square Value (6.31, α)	1.799				Adjusted Chi Square Value (6.31, β)		1.616
173					95% Gamma Approximate UCL (use when n>=50)	75.51				95% Gamma Adjusted UCL (use when n<50)		84.06
174												
175					Lognormal GOF Test on Detected Observations Only							
176					Shapiro Wilk Test Statistic	0.912				Shapiro Wilk GOF Test		
177					5% Shapiro Wilk Critical Value	0.85				Detected Data appear Lognormal at 5% Significance Level		
178					Lilliefors Test Statistic	0.183				Lilliefors GOF Test		
179					5% Lilliefors Critical Value	0.267				Detected Data appear Lognormal at 5% Significance Level		
180					Detected Data appear Lognormal at 5% Significance Level							
181												
182					Lognormal ROS Statistics Using Imputed Non-Detects							
183					Mean in Original Scale	21.53				Mean in Log Scale		-4.162
184					SD in Original Scale	71.54				SD in Log Scale		5.073
185					95% t UCL (assumes normality of ROS data)	49.2				95% Percentile Bootstrap UCL		51.73
186					95% BCA Bootstrap UCL	72.99				95% Bootstrap t UCL		462.1
187					95% H-UCL (Log ROS)	8.279E+8						
188												
189					UCLs using Lognormal Distribution and KM Estimates when Detected data are Lognormally Distributed							
190					KM Mean (logged)	-2.797				95% H-UCL (KM -Log)		23219
191					KM SD (logged)	3.658				95% Critical H Value (KM-Log)		7.336
192					KM Standard Error of Mean (logged)	0.858						
193												
194					DL/2 Statistics							
195					DL/2 Normal					DL/2 Log-Transformed		
196					Mean in Original Scale	21.53				Mean in Log Scale		-3.093
197					SD in Original Scale	71.54				SD in Log Scale		4.019
198					95% t UCL (Assumes normality)	49.2				95% H-Stat UCL		178850
199					DL/2 is not a recommended method, provided for comparisons and historical reasons							
200												

	A	B	C	D	E	F	G	H	I	J	K	L
201	Nonparametric Distribution Free UCL Statistics											
202	Detected Data appear Lognormal Distributed at 5% Significance Level											
203												
204	Suggested UCL to Use											
205					99% KM (Chebyshev) UCL	184.3						
206												
207	Note: Suggestions regarding the selection of a 95% UCL are provided to help the user to select the most appropriate 95% UCL.											
208	Recommendations are based upon data size, data distribution, and skewness.											
209	These recommendations are based upon the results of the simulation studies summarized in Singh, Maichle, and Lee (2006).											
210	However, simulations results will not cover all Real World data sets; for additional insight the user may want to consult a statistician.											
211												
212	Ethylbenzene											
213												
214	General Statistics											
215					Total Number of Observations	20			Number of Distinct Observations			19
216					Number of Detects	7			Number of Non-Detects			13
217					Number of Distinct Detects	7			Number of Distinct Non-Detects			12
218					Minimum Detect	0.00918			Minimum Non-Detect			0.00344
219					Maximum Detect	27.3			Maximum Non-Detect			8.35
220					Variance Detects	152.8			Percent Non-Detects			65%
221					Mean Detects	7.332			SD Detects			12.36
222					Median Detects	0.129			CV Detects			1.686
223					Skewness Detects	1.265			Kurtosis Detects			-0.619
224					Mean of Logged Detects	-1.12			SD of Logged Detects			3.198
225												
226	Normal GOF Test on Detects Only											
227					Shapiro Wilk Test Statistic	0.636			Shapiro Wilk GOF Test			
228					5% Shapiro Wilk Critical Value	0.803			Detected Data Not Normal at 5% Significance Level			
229					Lilliefors Test Statistic	0.426			Lilliefors GOF Test			
230					5% Lilliefors Critical Value	0.335			Detected Data Not Normal at 5% Significance Level			
231	Detected Data Not Normal at 5% Significance Level											
232												
233	Kaplan-Meier (KM) Statistics using Normal Critical Values and other Nonparametric UCLs											
234					Mean	2.595			Standard Error of Mean			1.838
235					SD	7.611			95% KM (BCA) UCL			5.475
236					95% KM (t) UCL	5.773			95% KM (Percentile Bootstrap) UCL			5.35
237					95% KM (z) UCL	5.618			95% KM Bootstrap t UCL			130.8
238					90% KM Chebyshev UCL	8.11			95% KM Chebyshev UCL			10.61
239					97.5% KM Chebyshev UCL	14.08			99% KM Chebyshev UCL			20.89
240												
241	Gamma GOF Tests on Detected Observations Only											
242					A-D Test Statistic	0.793			Anderson-Darling GOF Test			
243					5% A-D Critical Value	0.811			Detected data appear Gamma Distributed at 5% Significance Level			
244					K-S Test Statistic	0.313			Kolmogrov-Smirnoff GOF			
245					5% K-S Critical Value	0.34			Detected data appear Gamma Distributed at 5% Significance Level			
246	Detected data appear Gamma Distributed at 5% Significance Level											
247												
248	Gamma Statistics on Detected Data Only											
249					k hat (MLE)	0.231			k star (bias corrected MLE)			0.227
250					Theta hat (MLE)	31.72			Theta star (bias corrected MLE)			32.25

	A	B	C	D	E	F	G	H	I	J	K	L
251					nu hat (MLE)	3.236					nu star (bias corrected)	3.182
252					MLE Mean (bias corrected)	7.332					MLE Sd (bias corrected)	15.38
253												
254					**Gamma Kaplan-Meier (KM) Statistics**							
255					k hat (KM)	0.116					nu hat (KM)	4.648
256					Approximate Chi Square Value (4.65, α)	0.993					Adjusted Chi Square Value (4.65, β)	0.87
257					95% Gamma Approximate KM-UCL (use when n>=50)	12.14					95% Gamma Adjusted KM-UCL (use when n<50)	13.87
258												
259					**Gamma ROS Statistics using Imputed Non-Detects**							
260					GROS may not be used when data set has > 50% NDs with many tied observations at multiple DLs							
261					GROS may not be used when kstar of detected data is small such as < 0.1							
262					For such situations, GROS method tends to yield inflated values of UCLs and BTVs							
263					For gamma distributed detected data, BTVs and UCLs may be computed using gamma distribution on KM estimates							
264					Minimum	0.00918					Mean	2.573
265					Maximum	27.3					Median	0.01
266					SD	7.816					CV	3.038
267					k hat (MLE)	0.174					k star (bias corrected MLE)	0.181
268					Theta hat (MLE)	14.81					Theta star (bias corrected MLE)	14.22
269					nu hat (MLE)	6.947					nu star (bias corrected)	7.238
270					MLE Mean (bias corrected)	2.573					MLE Sd (bias corrected)	6.048
271											Adjusted Level of Significance (β)	0.038
272					Approximate Chi Square Value (7.24, α)	2.302					Adjusted Chi Square Value (7.24, β)	2.088
273					95% Gamma Approximate UCL (use when n>=50)	8.088					95% Gamma Adjusted UCL (use when n<50)	8.916
274												
275					**Lognormal GOF Test on Detected Observations Only**							
276					Shapiro Wilk Test Statistic	0.868					**Shapiro Wilk GOF Test**	
277					5% Shapiro Wilk Critical Value	0.803					Detected Data appear Lognormal at 5% Significance Level	
278					Lilliefors Test Statistic	0.195					**Lilliefors GOF Test**	
279					5% Lilliefors Critical Value	0.335					Detected Data appear Lognormal at 5% Significance Level	
280					**Detected Data appear Lognormal at 5% Significance Level**							
281												
282					**Lognormal ROS Statistics Using Imputed Non-Detects**							
283					Mean in Original Scale	2.569					Mean in Log Scale	-4.241
284					SD in Original Scale	7.817					SD in Log Scale	3.199
285					95% t UCL (assumes normality of ROS data)	5.592					95% Percentile Bootstrap UCL	5.325
286					95% BCA Bootstrap UCL	6.64					95% Bootstrap t UCL	221.4
287					95% H-UCL (Log ROS)	291.2						
288												
289					**UCLs using Lognormal Distribution and KM Estimates when Detected data are Lognormally Distributed**							
290					KM Mean (logged)	-3.347					95% H-UCL (KM -Log)	39.11
291					KM SD (logged)	2.681					95% Critical H Value (KM-Log)	5.561
292					KM Standard Error of Mean (logged)	0.747						
293												
294					**DL/2 Statistics**							
295					**DL/2 Normal**						**DL/2 Log-Transformed**	
296					Mean in Original Scale	3.131					Mean in Log Scale	-1.646
297					SD in Original Scale	7.685					SD in Log Scale	2.95
298					95% t UCL (Assumes normality)	6.103					95% H-Stat UCL	911.4
299					**DL/2 is not a recommended method, provided for comparisons and historical reasons**							
300												

	A	B	C	D	E	F	G	H	I	J	K	L
301	Nonparametric Distribution Free UCL Statistics											
302	Detected Data appear Gamma Distributed at 5% Significance Level											
303												
304	Suggested UCL to Use											
305					95% KM (t) UCL	5.773			95% GROS Adjusted Gamma UCL			8.916
306					95% Adjusted Gamma KM-UCL	13.87						
307												
308	Note: Suggestions regarding the selection of a 95% UCL are provided to help the user to select the most appropriate 95% UCL.											
309	Recommendations are based upon data size, data distribution, and skewness.											
310	These recommendations are based upon the results of the simulation studies summarized in Singh, Maichle, and Lee (2006).											
311	However, simulations results will not cover all Real World data sets; for additional insight the user may want to consult a statistician.											
312												
313	Napthalene											
314												
315	General Statistics											
316					Total Number of Observations	20			Number of Distinct Observations			19
317					Number of Detects	10			Number of Non-Detects			10
318					Number of Distinct Detects	10			Number of Distinct Non-Detects			9
319					Minimum Detect	0.026			Minimum Non-Detect			0.0134
320					Maximum Detect	295			Maximum Non-Detect			0.166
321					Variance Detects	13149			Percent Non-Detects			50%
322					Mean Detects	54.96			SD Detects			114.7
323					Median Detects	0.24			CV Detects			2.086
324					Skewness Detects	1.819			Kurtosis Detects			1.691
325					Mean of Logged Detects	-0.115			SD of Logged Detects			3.379
326												
327	Normal GOF Test on Detects Only											
328					Shapiro Wilk Test Statistic	0.537			Shapiro Wilk GOF Test			
329					5% Shapiro Wilk Critical Value	0.842			Detected Data Not Normal at 5% Significance Level			
330					Lilliefors Test Statistic	0.47			Lilliefors GOF Test			
331					5% Lilliefors Critical Value	0.28			Detected Data Not Normal at 5% Significance Level			
332	Detected Data Not Normal at 5% Significance Level											
333												
334	Kaplan-Meier (KM) Statistics using Normal Critical Values and other Nonparametric UCLs											
335					Mean	27.49			Standard Error of Mean			19.25
336					SD	81.68			95% KM (BCA) UCL			59.03
337					95% KM (t) UCL	60.78			95% KM (Percentile Bootstrap) UCL			59.49
338					95% KM (z) UCL	59.16			95% KM Bootstrap t UCL			2259
339					90% KM Chebyshev UCL	85.25			95% KM Chebyshev UCL			111.4
340					97.5% KM Chebyshev UCL	147.7			99% KM Chebyshev UCL			219.1
341												
342	Gamma GOF Tests on Detected Observations Only											
343					A-D Test Statistic	1.288			Anderson-Darling GOF Test			
344					5% A-D Critical Value	0.872			Detected Data Not Gamma Distributed at 5% Significance Level			
345					K-S Test Statistic	0.297			Kolmogrov-Smirnoff GOF			
346					5% K-S Critical Value	0.296			Detected Data Not Gamma Distributed at 5% Significance Level			
347	Detected Data Not Gamma Distributed at 5% Significance Level											
348												
349	Gamma Statistics on Detected Data Only											
350					k hat (MLE)	0.181			k star (bias corrected MLE)			0.194

	A–E	F	G–K	L
351	Theta hat (MLE)	303.2	Theta star (bias corrected MLE)	284
352	nu hat (MLE)	3.626	nu star (bias corrected)	3.871
353	MLE Mean (bias corrected)	54.96	MLE Sd (bias corrected)	124.9
354				
355	**Gamma Kaplan-Meier (KM) Statistics**			
356	k hat (KM)	0.113	nu hat (KM)	4.531
357	Approximate Chi Square Value (4.53, α)	0.942	Adjusted Chi Square Value (4.53, β)	0.823
358	95% Gamma Approximate KM-UCL (use when n>=50)	132.2	95% Gamma Adjusted KM-UCL (use when n<50)	151.4
359				
360	**Gamma ROS Statistics using Imputed Non-Detects**			
361	GROS may not be used when data set has > 50% NDs with many tied observations at multiple DLs			
362	GROS may not be used when kstar of detected data is small such as < 0.1			
363	For such situations, GROS method tends to yield inflated values of UCLs and BTVs			
364	For gamma distributed detected data, BTVs and UCLs may be computed using gamma distribution on KM estimates			
365	Minimum	0.01	Mean	27.49
366	Maximum	295	Median	0.018
367	SD	83.8	CV	3.049
368	k hat (MLE)	0.137	k star (bias corrected MLE)	0.15
369	Theta hat (MLE)	200.3	Theta star (bias corrected MLE)	183.3
370	nu hat (MLE)	5.488	nu star (bias corrected)	5.998
371	MLE Mean (bias corrected)	27.49	MLE Sd (bias corrected)	70.98
372			Adjusted Level of Significance (β)	0.038
373	Approximate Chi Square Value (6.00, α)	1.639	Adjusted Chi Square Value (6.00, β)	1.466
374	95% Gamma Approximate UCL (use when n>=50)	100.6	95% Gamma Adjusted UCL (use when n<50)	112.4
375				
376	**Lognormal GOF Test on Detected Observations Only**			
377	Shapiro Wilk Test Statistic	0.855	**Shapiro Wilk GOF Test**	
378	5% Shapiro Wilk Critical Value	0.842	Detected Data appear Lognormal at 5% Significance Level	
379	Lilliefors Test Statistic	0.237	**Lilliefors GOF Test**	
380	5% Lilliefors Critical Value	0.28	Detected Data appear Lognormal at 5% Significance Level	
381	**Detected Data appear Lognormal at 5% Significance Level**			
382				
383	**Lognormal ROS Statistics Using Imputed Non-Detects**			
384	Mean in Original Scale	27.48	Mean in Log Scale	-4.387
385	SD in Original Scale	83.81	SD in Log Scale	5.005
386	95% t UCL (assumes normality of ROS data)	59.89	95% Percentile Bootstrap UCL	59.33
387	95% BCA Bootstrap UCL	73.85	95% Bootstrap t UCL	2285
388	95% H-UCL (Log ROS)	3.439E+8		
389				
390	**UCLs using Lognormal Distribution and KM Estimates when Detected data are Lognormally Distributed**			
391	KM Mean (logged)	-2.192	95% H-UCL (KM -Log)	1119
392	KM SD (logged)	3.081	95% Critical H Value (KM-Log)	6.317
393	KM Standard Error of Mean (logged)	0.728		
394				
395	**DL/2 Statistics**			
396	**DL/2 Normal**		**DL/2 Log-Transformed**	
397	Mean in Original Scale	27.49	Mean in Log Scale	-2.415
398	SD in Original Scale	83.8	SD in Log Scale	3.357
399	95% t UCL (Assumes normality)	59.89	95% H-Stat UCL	4856
400	**DL/2 is not a recommended method, provided for comparisons and historical reasons**			

	A	B	C	D	E	F	G	H	I	J	K	L
401												
402						Nonparametric Distribution Free UCL Statistics						
403						Detected Data appear Lognormal Distributed at 5% Significance Level						
404												
405						Suggested UCL to Use						
406					99% KM (Chebyshev) UCL	219.1						
407												
408						Note: Suggestions regarding the selection of a 95% UCL are provided to help the user to select the most appropriate 95% UCL.						
409						Recommendations are based upon data size, data distribution, and skewness.						
410						These recommendations are based upon the results of the simulation studies summarized in Singh, Maichle, and Lee (2006).						
411						However, simulations results will not cover all Real World data sets; for additional insight the user may want to consult a statistician.						
412												
413	Styrene											
414												
415						General Statistics						
416					Total Number of Observations	20			Number of Distinct Observations			19
417					Number of Detects	1			Number of Non-Detects			19
418					Number of Distinct Detects	1			Number of Distinct Non-Detects			18
419												
420						Warning: Only one distinct data value was detected! ProUCL (or any other software) should not be used on such a data set!						
421						It is suggested to use alternative site specific values determined by the Project Team to estimate environmental parameters (e.g., EPC, BTV).						
422												
423						The data set for variable Styrene was not processed!						
424												
425												
426	Xylenes											
427												
428						General Statistics						
429					Total Number of Observations	20			Number of Distinct Observations			17
430					Number of Detects	7			Number of Non-Detects			13
431					Number of Distinct Detects	7			Number of Distinct Non-Detects			10
432					Minimum Detect	0.0296			Minimum Non-Detect			0.0078
433					Maximum Detect	174			Maximum Non-Detect			0.0099
434					Variance Detects	5126			Percent Non-Detects			65%
435					Mean Detects	40.74			SD Detects			71.6
436					Median Detects	0.176			CV Detects			1.757
437					Skewness Detects	1.504			Kurtosis Detects			0.848
438					Mean of Logged Detects	-0.0193			SD of Logged Detects			3.518
439												
440						Normal GOF Test on Detects Only						
441					Shapiro Wilk Test Statistic	0.654			Shapiro Wilk GOF Test			
442					5% Shapiro Wilk Critical Value	0.803			Detected Data Not Normal at 5% Significance Level			
443					Lilliefors Test Statistic	0.426			Lilliefors GOF Test			
444					5% Lilliefors Critical Value	0.335			Detected Data Not Normal at 5% Significance Level			
445						Detected Data Not Normal at 5% Significance Level						
446												
447						Kaplan-Meier (KM) Statistics using Normal Critical Values and other Nonparametric UCLs						
448					Mean	14.26			Standard Error of Mean			10.57
449					SD	43.76			95% KM (BCA) UCL			31.66
450					95% KM (t) UCL	32.54			95% KM (Percentile Bootstrap) UCL			31.73

	A	B	C	D	E	F	G	H	I	J	K	L
451					95% KM (z) UCL	31.65				95% KM Bootstrap t UCL		3632
452					90% KM Chebyshev UCL	45.98				95% KM Chebyshev UCL		60.34
453					97.5% KM Chebyshev UCL	80.28				99% KM Chebyshev UCL		119.4
454												
455					**Gamma GOF Tests on Detected Observations Only**							
456					A-D Test Statistic	0.93	**Anderson-Darling GOF Test**					
457					5% A-D Critical Value	0.825	Detected Data Not Gamma Distributed at 5% Significance Level					
458					K-S Test Statistic	0.353	**Kolmogrov-Smirnoff GOF**					
459					5% K-S Critical Value	0.343	Detected Data Not Gamma Distributed at 5% Significance Level					
460					**Detected Data Not Gamma Distributed at 5% Significance Level**							
461												
462					**Gamma Statistics on Detected Data Only**							
463					k hat (MLE)	0.198	k star (bias corrected MLE)					0.208
464					Theta hat (MLE)	206	Theta star (bias corrected MLE)					195.6
465					nu hat (MLE)	2.769	nu star (bias corrected)					2.916
466					MLE Mean (bias corrected)	40.74	MLE Sd (bias corrected)					89.27
467												
468					**Gamma Kaplan-Meier (KM) Statistics**							
469					k hat (KM)	0.106	nu hat (KM)					4.25
470					Approximate Chi Square Value (4.25, α)	0.823	Adjusted Chi Square Value (4.25, β)					0.714
471					95% Gamma Approximate KM-UCL (use when n>=50)	73.68	95% Gamma Adjusted KM-UCL (use when n<50)					84.87
472												
473					**Gamma ROS Statistics using Imputed Non-Detects**							
474					GROS may not be used when data set has > 50% NDs with many tied observations at multiple DLs							
475					GROS may not be used when kstar of detected data is small such as < 0.1							
476					For such situations, GROS method tends to yield inflated values of UCLs and BTVs							
477					For gamma distributed detected data, BTVs and UCLs may be computed using gamma distribution on KM estimates							
478					Minimum	0.01	Mean					14.27
479					Maximum	174	Median					0.01
480					SD	44.9	CV					3.147
481					k hat (MLE)	0.138	k star (bias corrected MLE)					0.15
482					Theta hat (MLE)	103.7	Theta star (bias corrected MLE)					94.96
483					nu hat (MLE)	5.502	nu star (bias corrected)					6.01
484					MLE Mean (bias corrected)	14.27	MLE Sd (bias corrected)					36.81
485							Adjusted Level of Significance (β)					0.038
486					Approximate Chi Square Value (6.01, α)	1.645	Adjusted Chi Square Value (6.01, β)					1.472
487					95% Gamma Approximate UCL (use when n>=50)	52.13	95% Gamma Adjusted UCL (use when n<50)					58.25
488												
489					**Lognormal GOF Test on Detected Observations Only**							
490					Shapiro Wilk Test Statistic	0.82	**Shapiro Wilk GOF Test**					
491					5% Shapiro Wilk Critical Value	0.803	Detected Data appear Lognormal at 5% Significance Level					
492					Lilliefors Test Statistic	0.259	**Lilliefors GOF Test**					
493					5% Lilliefors Critical Value	0.335	Detected Data appear Lognormal at 5% Significance Level					
494					**Detected Data appear Lognormal at 5% Significance Level**							
495												
496					**Lognormal ROS Statistics Using Imputed Non-Detects**							
497					Mean in Original Scale	14.26	Mean in Log Scale					-7.569
498					SD in Original Scale	44.9	SD in Log Scale					6.192
499					95% t UCL (assumes normality of ROS data)	31.62	95% Percentile Bootstrap UCL					31.65
500					95% BCA Bootstrap UCL	39.45	95% Bootstrap t UCL					3678

	A	B	C	D	E	F	G	H	I	J	K	L
501					95% H-UCL (Log ROS)	4.492E+12						
502												
503	**UCLs using Lognormal Distribution and KM Estimates when Detected data are Lognormally Distributed**											
504					KM Mean (logged)	-3.162				95% H-UCL (KM -Log)		272.7
505					KM SD (logged)	3.005				95% Critical H Value (KM-Log)		6.173
506					KM Standard Error of Mean (logged)	0.726						
507												
508	**DL/2 Statistics**											
509				**DL/2 Normal**						**DL/2 Log-Transformed**		
510					Mean in Original Scale	14.26				Mean in Log Scale		-3.562
511					SD in Original Scale	44.9				SD in Log Scale		3.32
512					95% t UCL (Assumes normality)	31.62				95% H-Stat UCL		1222
513	**DL/2 is not a recommended method, provided for comparisons and historical reasons**											
514												
515	**Nonparametric Distribution Free UCL Statistics**											
516	**Detected Data appear Lognormal Distributed at 5% Significance Level**											
517												
518	**Suggested UCL to Use**											
519					99% KM (Chebyshev) UCL	119.4						
520												
521	Note: Suggestions regarding the selection of a 95% UCL are provided to help the user to select the most appropriate 95% UCL.											
522	Recommendations are based upon data size, data distribution, and skewness.											
523	These recommendations are based upon the results of the simulation studies summarized in Singh, Maichle, and Lee (2006).											
524	However, simulations results will not cover all Real World data sets; for additional insight the user may want to consult a statistician.											
525												
526	**1,2,3-trimethylbenzene**											
527												
528	**General Statistics**											
529					Total Number of Observations	20				Number of Distinct Observations		20
530					Number of Detects	10				Number of Non-Detects		10
531					Number of Distinct Detects	10				Number of Distinct Non-Detects		10
532					Minimum Detect	0.0073				Minimum Non-Detect		0.00133
533					Maximum Detect	167				Maximum Non-Detect		0.00165
534					Variance Detects	2983				Percent Non-Detects		50%
535					Mean Detects	23.81				SD Detects		54.62
536					Median Detects	0.186				CV Detects		2.294
537					Skewness Detects	2.488				Kurtosis Detects		6.123
538					Mean of Logged Detects	-1.074				SD of Logged Detects		3.491
539												
540	**Normal GOF Test on Detects Only**											
541					Shapiro Wilk Test Statistic	0.525				**Shapiro Wilk GOF Test**		
542					5% Shapiro Wilk Critical Value	0.842				Detected Data Not Normal at 5% Significance Level		
543					Lilliefors Test Statistic	0.453				**Lilliefors GOF Test**		
544					5% Lilliefors Critical Value	0.28				Detected Data Not Normal at 5% Significance Level		
545	**Detected Data Not Normal at 5% Significance Level**											
546												
547	**Kaplan-Meier (KM) Statistics using Normal Critical Values and other Nonparametric UCLs**											
548					Mean	11.91				Standard Error of Mean		9.08
549					SD	38.52				95% KM (BCA) UCL		28.62
550					95% KM (t) UCL	27.61				95% KM (Percentile Bootstrap) UCL		28.48

	A	B	C	D	E	F	G	H	I	J	K	L
551					95% KM (z) UCL	26.84					95% KM Bootstrap t UCL	906.7
552					90% KM Chebyshev UCL	39.15					95% KM Chebyshev UCL	51.49
553					97.5% KM Chebyshev UCL	68.61					99% KM Chebyshev UCL	102.3
554												
555					**Gamma GOF Tests on Detected Observations Only**							
556					A-D Test Statistic	1.088	**Anderson-Darling GOF Test**					
557					5% A-D Critical Value	0.876	Detected Data Not Gamma Distributed at 5% Significance Level					
558					K-S Test Statistic	0.323	**Kolmogrov-Smirnoff GOF**					
559					5% K-S Critical Value	0.297	Detected Data Not Gamma Distributed at 5% Significance Level					
560					**Detected Data Not Gamma Distributed at 5% Significance Level**							
561												
562					**Gamma Statistics on Detected Data Only**							
563					k hat (MLE)	0.177	k star (bias corrected MLE)					0.19
564					Theta hat (MLE)	134.7	Theta star (bias corrected MLE)					125.1
565					nu hat (MLE)	3.535	nu star (bias corrected)					3.808
566					MLE Mean (bias corrected)	23.81	MLE Sd (bias corrected)					54.57
567												
568					**Gamma Kaplan-Meier (KM) Statistics**							
569					k hat (KM)	0.0955	nu hat (KM)					3.821
570					Approximate Chi Square Value (3.82, α)	0.652	Adjusted Chi Square Value (3.82, β)					0.561
571					95% Gamma Approximate KM-UCL (use when n>=50)	69.75	95% Gamma Adjusted KM-UCL (use when n<50)					81.15
572					Gamma (KM) may not be used when k hat (KM) is < 0.1							
573												
574					**Gamma ROS Statistics using Imputed Non-Detects**							
575					GROS may not be used when data set has > 50% NDs with many tied observations at multiple DLs							
576					GROS may not be used when kstar of detected data is small such as < 0.1							
577					For such situations, GROS method tends to yield inflated values of UCLs and BTVs							
578					For gamma distributed detected data, BTVs and UCLs may be computed using gamma distribution on KM estimates							
579					Minimum	0.0073	Mean					11.91
580					Maximum	167	Median					0.01
581					SD	39.52	CV					3.318
582					k hat (MLE)	0.145	k star (bias corrected MLE)					0.157
583					Theta hat (MLE)	82.02	Theta star (bias corrected MLE)					75.97
584					nu hat (MLE)	5.809	nu star (bias corrected)					6.271
585					MLE Mean (bias corrected)	11.91	MLE Sd (bias corrected)					30.08
586							Adjusted Level of Significance (β)					0.038
587					Approximate Chi Square Value (6.27, α)	1.78	Adjusted Chi Square Value (6.27, β)					1.598
588					95% Gamma Approximate UCL (use when n>=50)	41.97	95% Gamma Adjusted UCL (use when n<50)					46.74
589												
590					**Lognormal GOF Test on Detected Observations Only**							
591					Shapiro Wilk Test Statistic	0.897	**Shapiro Wilk GOF Test**					
592					5% Shapiro Wilk Critical Value	0.842	Detected Data appear Lognormal at 5% Significance Level					
593					Lilliefors Test Statistic	0.199	**Lilliefors GOF Test**					
594					5% Lilliefors Critical Value	0.28	Detected Data appear Lognormal at 5% Significance Level					
595					**Detected Data appear Lognormal at 5% Significance Level**							
596												
597					**Lognormal ROS Statistics Using Imputed Non-Detects**							
598					Mean in Original Scale	11.91	Mean in Log Scale					-5.923
599					SD in Original Scale	39.53	SD in Log Scale					5.525
600					95% t UCL (assumes normality of ROS data)	27.19	95% Percentile Bootstrap UCL					28.47

	A	B	C	D	E	F	G	H	I	J	K	L
601					95% BCA Bootstrap UCL	37.17					95% Bootstrap t UCL	914.3
602					95% H-UCL (Log ROS)	1.355E+10						
603												
604					**UCLs using Lognormal Distribution and KM Estimates when Detected data are Lognormally Distributed**							
605					KM Mean (logged)	-3.847					95% H-UCL (KM -Log)	6751
606					KM SD (logged)	3.63					95% Critical H Value (KM-Log)	7.299
607					KM Standard Error of Mean (logged)	0.856						
608												
609					**DL/2 Statistics**							
610					**DL/2 Normal**					**DL/2 Log-Transformed**		
611					Mean in Original Scale	11.91					Mean in Log Scale	-4.162
612					SD in Original Scale	39.53					SD in Log Scale	3.976
613					95% t UCL (Assumes normality)	27.19					95% H-Stat UCL	45567
614					**DL/2 is not a recommended method, provided for comparisons and historical reasons**							
615												
616					**Nonparametric Distribution Free UCL Statistics**							
617					**Detected Data appear Lognormal Distributed at 5% Significance Level**							
618												
619					**Suggested UCL to Use**							
620					99% KM (Chebyshev) UCL	102.3						
621												
622					Note: Suggestions regarding the selection of a 95% UCL are provided to help the user to select the most appropriate 95% UCL.							
623					Recommendations are based upon data size, data distribution, and skewness.							
624					These recommendations are based upon the results of the simulation studies summarized in Singh, Maichle, and Lee (2006).							
625					However, simulations results will not cover all Real World data sets; for additional insight the user may want to consult a statistician.							
626												
627	**1,2,4-trimethylbenzene**											
628												
629					**General Statistics**							
630					Total Number of Observations	20					Number of Distinct Observations	20
631					Number of Detects	10					Number of Non-Detects	10
632					Number of Distinct Detects	10					Number of Distinct Non-Detects	10
633					Minimum Detect	0.00734					Minimum Non-Detect	0.0026
634					Maximum Detect	347					Maximum Non-Detect	0.00399
635					Variance Detects	20654					Percent Non-Detects	50%
636					Mean Detects	68.88					SD Detects	143.7
637					Median Detects	0.317					CV Detects	2.087
638					Skewness Detects	1.78					Kurtosis Detects	1.416
639					Mean of Logged Detects	-0.528					SD of Logged Detects	3.855
640												
641					**Normal GOF Test on Detects Only**							
642					Shapiro Wilk Test Statistic	0.519					**Shapiro Wilk GOF Test**	
643					5% Shapiro Wilk Critical Value	0.842					Detected Data Not Normal at 5% Significance Level	
644					Lilliefors Test Statistic	0.473					**Lilliefors GOF Test**	
645					5% Lilliefors Critical Value	0.28					Detected Data Not Normal at 5% Significance Level	
646					**Detected Data Not Normal at 5% Significance Level**							
647												
648					**Kaplan-Meier (KM) Statistics using Normal Critical Values and other Nonparametric UCLs**							
649					Mean	34.44					Standard Error of Mean	24.13
650					SD	102.4					95% KM (BCA) UCL	69.14

	A	B	C	D	E	F	G	H	I	J	K	L
651					95% KM (t) UCL	76.16				95% KM (Percentile Bootstrap) UCL		69.35
652					95% KM (z) UCL	74.13				95% KM Bootstrap t UCL		3725
653					90% KM Chebyshev UCL	106.8				95% KM Chebyshev UCL		139.6
654					97.5% KM Chebyshev UCL	185.1				99% KM Chebyshev UCL		274.5
655												
656					**Gamma GOF Tests on Detected Observations Only**							
657					A-D Test Statistic	1.183	**Anderson-Darling GOF Test**					
658					5% A-D Critical Value	0.891	Detected Data Not Gamma Distributed at 5% Significance Level					
659					K-S Test Statistic	0.317	**Kolmogrov-Smirnoff GOF**					
660					5% K-S Critical Value	0.298	Detected Data Not Gamma Distributed at 5% Significance Level					
661					**Detected Data Not Gamma Distributed at 5% Significance Level**							
662												
663					**Gamma Statistics on Detected Data Only**							
664					k hat (MLE)	0.16	k star (bias corrected MLE)					0.179
665					Theta hat (MLE)	430.6	Theta star (bias corrected MLE)					385.6
666					nu hat (MLE)	3.199	nu star (bias corrected)					3.573
667					MLE Mean (bias corrected)	68.88	MLE Sd (bias corrected)					163
668												
669					**Gamma Kaplan-Meier (KM) Statistics**							
670					k hat (KM)	0.113	nu hat (KM)					4.527
671					Approximate Chi Square Value (4.53, α)	0.94	Adjusted Chi Square Value (4.53, β)					0.821
672					95% Gamma Approximate KM-UCL (use when n>=50)	165.8	95% Gamma Adjusted KM-UCL (use when n<50)					189.9
673												
674					**Gamma ROS Statistics using Imputed Non-Detects**							
675					GROS may not be used when data set has > 50% NDs with many tied observations at multiple DLs							
676					GROS may not be used when kstar of detected data is small such as < 0.1							
677					For such situations, GROS method tends to yield inflated values of UCLs and BTVs							
678					For gamma distributed detected data, BTVs and UCLs may be computed using gamma distribution on KM estimates							
679					Minimum	0.00734	Mean					34.44
680					Maximum	347	Median					0.01
681					SD	105	CV					3.049
682					k hat (MLE)	0.129	k star (bias corrected MLE)					0.143
683					Theta hat (MLE)	267.7	Theta star (bias corrected MLE)					241.4
684					nu hat (MLE)	5.146	nu star (bias corrected)					5.707
685					MLE Mean (bias corrected)	34.44	MLE Sd (bias corrected)					91.18
686							Adjusted Level of Significance (β)					0.038
687					Approximate Chi Square Value (5.71, α)	1.492	Adjusted Chi Square Value (5.71, β)					1.33
688					95% Gamma Approximate UCL (use when n>=50)	131.7	95% Gamma Adjusted UCL (use when n<50)					147.8
689												
690					**Lognormal GOF Test on Detected Observations Only**							
691					Shapiro Wilk Test Statistic	0.883	**Shapiro Wilk GOF Test**					
692					5% Shapiro Wilk Critical Value	0.842	Detected Data appear Lognormal at 5% Significance Level					
693					Lilliefors Test Statistic	0.186	**Lilliefors GOF Test**					
694					5% Lilliefors Critical Value	0.28	Detected Data appear Lognormal at 5% Significance Level					
695					**Detected Data appear Lognormal at 5% Significance Level**							
696												
697					**Lognormal ROS Statistics Using Imputed Non-Detects**							
698					Mean in Original Scale	34.44	Mean in Log Scale					-5.838
699					SD in Original Scale	105	SD in Log Scale					6.06
700					95% t UCL (assumes normality of ROS data)	75.05	95% Percentile Bootstrap UCL					69.35

	A	B	C	D	E	F	G	H	I	J	K	L
701					95% BCA Bootstrap UCL	86.31				95% Bootstrap t UCL		3726
702					95% H-UCL (Log ROS)	5.413E+12						
703												
704					**UCLs using Lognormal Distribution and KM Estimates when Detected data are Lognormally Distributed**							
705					KM Mean (logged)	-3.24				95% H-UCL (KM -Log)		26343
706					KM SD (logged)	3.747				95% Critical H Value (KM-Log)		7.442
707					KM Standard Error of Mean (logged)	0.883						
708												
709					**DL/2 Statistics**							
710					**DL/2 Normal**					**DL/2 Log-Transformed**		
711					Mean in Original Scale	34.44				Mean in Log Scale		-3.535
712					SD in Original Scale	105				SD in Log Scale		4.07
713					95% t UCL (Assumes normality)	75.05				95% H-Stat UCL		170899
714					**DL/2 is not a recommended method, provided for comparisons and historical reasons**							
715												
716					**Nonparametric Distribution Free UCL Statistics**							
717					**Detected Data appear Lognormal Distributed at 5% Significance Level**							
718												
719					**Suggested UCL to Use**							
720					99% KM (Chebyshev) UCL	274.5						
721												
722					Note: Suggestions regarding the selection of a 95% UCL are provided to help the user to select the most appropriate 95% UCL.							
723					Recommendations are based upon data size, data distribution, and skewness.							
724					These recommendations are based upon the results of the simulation studies summarized in Singh, Maichle, and Lee (2006).							
725					However, simulations results will not cover all Real World data sets; for additional insight the user may want to consult a statistician.							
726												
727	**1,3,5-trimethylbenzene**											
728												
729					**General Statistics**							
730					Total Number of Observations	20				Number of Distinct Observations		20
731					Number of Detects	9				Number of Non-Detects		11
732					Number of Distinct Detects	9				Number of Distinct Non-Detects		11
733					Minimum Detect	0.0068				Minimum Non-Detect		0.0013
734					Maximum Detect	147				Maximum Non-Detect		0.00367
735					Variance Detects	2572				Percent Non-Detects		55%
736					Mean Detects	23.65				SD Detects		50.71
737					Median Detects	0.233				CV Detects		2.144
738					Skewness Detects	2.28				Kurtosis Detects		4.987
739					Mean of Logged Detects	-1.006				SD of Logged Detects		3.688
740												
741					**Normal GOF Test on Detects Only**							
742					Shapiro Wilk Test Statistic	0.561				**Shapiro Wilk GOF Test**		
743					5% Shapiro Wilk Critical Value	0.829				Detected Data Not Normal at 5% Significance Level		
744					Lilliefors Test Statistic	0.443				**Lilliefors GOF Test**		
745					5% Lilliefors Critical Value	0.295				Detected Data Not Normal at 5% Significance Level		
746					**Detected Data Not Normal at 5% Significance Level**							
747												
748					**Kaplan-Meier (KM) Statistics using Normal Critical Values and other Nonparametric UCLs**							
749					Mean	10.64				Standard Error of Mean		8.102
750					SD	34.16				95% KM (BCA) UCL		24.48

	A	B	C	D	E	F	G	H	I	J	K	L
751					95% KM (t) UCL	24.65				95% KM (Percentile Bootstrap) UCL		24.41
752					95% KM (z) UCL	23.97				95% KM Bootstrap t UCL		859
753					90% KM Chebyshev UCL	34.95				95% KM Chebyshev UCL		45.96
754					97.5% KM Chebyshev UCL	61.24				99% KM Chebyshev UCL		91.26
755												
756					**Gamma GOF Tests on Detected Observations Only**							
757					A-D Test Statistic	0.87	**Anderson-Darling GOF Test**					
758					5% A-D Critical Value	0.866	Detected Data Not Gamma Distributed at 5% Significance Level					
759					K-S Test Statistic	0.313	**Kolmogrov-Smirnoff GOF**					
760					5% K-S Critical Value	0.31	Detected Data Not Gamma Distributed at 5% Significance Level					
761					**Detected Data Not Gamma Distributed at 5% Significance Level**							
762												
763					**Gamma Statistics on Detected Data Only**							
764					k hat (MLE)	0.179	k star (bias corrected MLE)					0.194
765					Theta hat (MLE)	131.8	Theta star (bias corrected MLE)					122.1
766					nu hat (MLE)	3.231	nu star (bias corrected)					3.487
767					MLE Mean (bias corrected)	23.65	MLE Sd (bias corrected)					53.73
768												
769					**Gamma Kaplan-Meier (KM) Statistics**							
770					k hat (KM)	0.0971	nu hat (KM)					3.882
771					Approximate Chi Square Value (3.88, α)	0.676	Adjusted Chi Square Value (3.88, β)					0.582
772					95% Gamma Approximate KM-UCL (use when n>=50)	61.15	95% Gamma Adjusted KM-UCL (use when n<50)					71.04
773					Gamma (KM) may not be used when k hat (KM) is < 0.1							
774												
775					**Gamma ROS Statistics using Imputed Non-Detects**							
776					GROS may not be used when data set has > 50% NDs with many tied observations at multiple DLs							
777					GROS may not be used when kstar of detected data is small such as < 0.1							
778					For such situations, GROS method tends to yield inflated values of UCLs and BTVs							
779					For gamma distributed detected data, BTVs and UCLs may be computed using gamma distribution on KM estimates							
780					Minimum	0.0068	Mean					10.65
781					Maximum	147	Median					0.01
782					SD	35.05	CV					3.292
783					k hat (MLE)	0.144	k star (bias corrected MLE)					0.156
784					Theta hat (MLE)	73.72	Theta star (bias corrected MLE)					68.21
785					nu hat (MLE)	5.777	nu star (bias corrected)					6.244
786					MLE Mean (bias corrected)	10.65	MLE Sd (bias corrected)					26.95
787							Adjusted Level of Significance (β)					0.038
788					Approximate Chi Square Value (6.24, α)	1.766	Adjusted Chi Square Value (6.24, β)					1.585
789					95% Gamma Approximate UCL (use when n>=50)	37.65	95% Gamma Adjusted UCL (use when n<50)					41.95
790												
791					**Lognormal GOF Test on Detected Observations Only**							
792					Shapiro Wilk Test Statistic	0.893	**Shapiro Wilk GOF Test**					
793					5% Shapiro Wilk Critical Value	0.829	Detected Data appear Lognormal at 5% Significance Level					
794					Lilliefors Test Statistic	0.204	**Lilliefors GOF Test**					
795					5% Lilliefors Critical Value	0.295	Detected Data appear Lognormal at 5% Significance Level					
796					**Detected Data appear Lognormal at 5% Significance Level**							
797												
798					**Lognormal ROS Statistics Using Imputed Non-Detects**							
799					Mean in Original Scale	10.64	Mean in Log Scale					-6.934
800					SD in Original Scale	35.05	SD in Log Scale					6

	A	B	C	D	E	F	G	H	I	J	K	L
801					95% t UCL (assumes normality of ROS data)	24.19					95% Percentile Bootstrap UCL	25.26
802					95% BCA Bootstrap UCL	32.72					95% Bootstrap t UCL	858.4
803					95% H-UCL (Log ROS)	9.077E+11						
804												
805					**UCLs using Lognormal Distribution and KM Estimates when Detected data are Lognormally Distributed**							
806					KM Mean (logged)	-4.108					95% H-UCL (KM -Log)	5885
807					KM SD (logged)	3.649					95% Critical H Value (KM-Log)	7.324
808					KM Standard Error of Mean (logged)	0.865						
809												
810					**DL/2 Statistics**							
811					**DL/2 Normal**				**DL/2 Log-Transformed**			
812					Mean in Original Scale	10.64					Mean in Log Scale	-4.386
813					SD in Original Scale	35.05					SD in Log Scale	3.952
814					95% t UCL (Assumes normality)	24.19					95% H-Stat UCL	31157
815					**DL/2 is not a recommended method, provided for comparisons and historical reasons**							
816												
817					**Nonparametric Distribution Free UCL Statistics**							
818					**Detected Data appear Lognormal Distributed at 5% Significance Level**							
819												
820					**Suggested UCL to Use**							
821					99% KM (Chebyshev) UCL	91.26						
822												
823					Note: Suggestions regarding the selection of a 95% UCL are provided to help the user to select the most appropriate 95% UCL.							
824					Recommendations are based upon data size, data distribution, and skewness.							
825					These recommendations are based upon the results of the simulation studies summarized in Singh, Maichle, and Lee (2006).							
826					However, simulations results will not cover all Real World data sets; for additional insight the user may want to consult a statistician.							
827												

	A	B	C	D	E	F	G	H	I	J	K	L
1	**UCL Statistics for Data Sets with Non-Detects**											
2												
3	User Selected Options											
4	Date/Time of Computation			2/10/2016 11:12:09 AM								
5	From File			subsurface half NDs.xls								
6	Full Precision			OFF								
7	Confidence Coefficient			95%								
8	Number of Bootstrap Operations			2000								
9												
10	**DCPD**											
11												
12	**General Statistics**											
13	Total Number of Observations					20	Number of Distinct Observations					19
14	Number of Detects					14	Number of Non-Detects					6
15	Number of Distinct Detects					14	Number of Distinct Non-Detects					5
16	Minimum Detect					0.00838	Minimum Non-Detect					0.00273
17	Maximum Detect					654	Maximum Non-Detect					0.00298
18	Variance Detects					43729	Percent Non-Detects					30%
19	Mean Detects					130.8	SD Detects					209.1
20	Median Detects					5.579	CV Detects					1.599
21	Skewness Detects					1.561	Kurtosis Detects					1.612
22	Mean of Logged Detects					1.727	SD of Logged Detects					3.603
23												
24	**Normal GOF Test on Detects Only**											
25	Shapiro Wilk Test Statistic					0.691	**Shapiro Wilk GOF Test**					
26	5% Shapiro Wilk Critical Value					0.874	Detected Data Not Normal at 5% Significance Level					
27	Lilliefors Test Statistic					0.32	**Lilliefors GOF Test**					
28	5% Lilliefors Critical Value					0.237	Detected Data Not Normal at 5% Significance Level					
29	**Detected Data Not Normal at 5% Significance Level**											
30												
31	**Kaplan-Meier (KM) Statistics using Normal Critical Values and other Nonparametric UCLs**											
32	Mean					91.53	Standard Error of Mean					41.52
33	SD					178.9	95% KM (BCA) UCL					161.4
34	95% KM (t) UCL					163.3	95% KM (Percentile Bootstrap) UCL					163
35	95% KM (z) UCL					159.8	95% KM Bootstrap t UCL					233.2
36	90% KM Chebyshev UCL					216.1	95% KM Chebyshev UCL					272.5
37	97.5% KM Chebyshev UCL					350.8	99% KM Chebyshev UCL					504.6
38												
39	**Gamma GOF Tests on Detected Observations Only**											
40	A-D Test Statistic					0.764	**Anderson-Darling GOF Test**					
41	5% A-D Critical Value					0.866	Detected data appear Gamma Distributed at 5% Significance Level					
42	K-S Test Statistic					0.246	**Kolmogrov-Smirnoff GOF**					
43	5% K-S Critical Value					0.251	Detected data appear Gamma Distributed at 5% Significance Level					
44	**Detected data appear Gamma Distributed at 5% Significance Level**											
45												
46	**Gamma Statistics on Detected Data Only**											
47	k hat (MLE)					0.229	k star (bias corrected MLE)					0.228
48	Theta hat (MLE)					571	Theta star (bias corrected MLE)					574.7
49	nu hat (MLE)					6.411	nu star (bias corrected)					6.371
50	MLE Mean (bias corrected)					130.8	MLE Sd (bias corrected)					274.1

	A	B	C	D	E	F	G	H	I	J	K	L
51												
52						Gamma Kaplan-Meier (KM) Statistics						
53					k hat (KM)	0.262					nu hat (KM)	10.47
54					Approximate Chi Square Value (10.47, α)	4.236					Adjusted Chi Square Value (10.47, β)	3.926
55					95% Gamma Approximate KM-UCL (use when n>=50)	226.2					95% Gamma Adjusted KM-UCL (use when n<50)	244
56												
57						Gamma ROS Statistics using Imputed Non-Detects						
58						GROS may not be used when data set has > 50% NDs with many tied observations at multiple DLs						
59						GROS may not be used when kstar of detected data is small such as < 0.1						
60						For such situations, GROS method tends to yield inflated values of UCLs and BTVs						
61						For gamma distributed detected data, BTVs and UCLs may be computed using gamma distribution on KM estimates						
62					Minimum	0.00838					Mean	91.53
63					Maximum	654					Median	0.352
64					SD	183.6					CV	2.006
65					k hat (MLE)	0.162					k star (bias corrected MLE)	0.171
66					Theta hat (MLE)	564.8					Theta star (bias corrected MLE)	535
67					nu hat (MLE)	6.482					nu star (bias corrected)	6.843
68					MLE Mean (bias corrected)	91.53					MLE Sd (bias corrected)	221.3
69											Adjusted Level of Significance (β)	0.038
70					Approximate Chi Square Value (6.84, α)	2.085					Adjusted Chi Square Value (6.84, β)	1.884
71					95% Gamma Approximate UCL (use when n>=50)	300.4					95% Gamma Adjusted UCL (use when n<50)	332.5
72												
73						Lognormal GOF Test on Detected Observations Only						
74					Shapiro Wilk Test Statistic	0.906					Shapiro Wilk GOF Test	
75					5% Shapiro Wilk Critical Value	0.874					Detected Data appear Lognormal at 5% Significance Level	
76					Lilliefors Test Statistic	0.188					Lilliefors GOF Test	
77					5% Lilliefors Critical Value	0.237					Detected Data appear Lognormal at 5% Significance Level	
78						Detected Data appear Lognormal at 5% Significance Level						
79												
80						Lognormal ROS Statistics Using Imputed Non-Detects						
81					Mean in Original Scale	91.53					Mean in Log Scale	-0.774
82					SD in Original Scale	183.6					SD in Log Scale	4.94
83					95% t UCL (assumes normality of ROS data)	162.5					95% Percentile Bootstrap UCL	155.7
84					95% BCA Bootstrap UCL	180.8					95% Bootstrap t UCL	231.8
85					95% H-UCL (Log ROS)	7.026E+9						
86												
87						UCLs using Lognormal Distribution and KM Estimates when Detected data are Lognormally Distributed						
88					KM Mean (logged)	-0.562					95% H-UCL (KM -Log)	2.468E+8
89					KM SD (logged)	4.547					95% Critical H Value (KM-Log)	9.156
90					KM Standard Error of Mean (logged)	1.055						
91												
92						DL/2 Statistics						
93					DL/2 Normal						DL/2 Log-Transformed	
94					Mean in Original Scale	91.53					Mean in Log Scale	-0.76
95					SD in Original Scale	183.6					SD in Log Scale	4.907
96					95% t UCL (Assumes normality)	162.5					95% H-Stat UCL	5.301E+9
97						DL/2 is not a recommended method, provided for comparisons and historical reasons						
98												
99						Nonparametric Distribution Free UCL Statistics						
100						Detected Data appear Gamma Distributed at 5% Significance Level						

	A	B	C	D	E	F	G	H	I	J	K	L
101												
102						**Suggested UCL to Use**						
103					95% KM (BCA) UCL	161.4				95% GROS Adjusted Gamma UCL		332.5
104					95% Adjusted Gamma KM-UCL	244						
105												
106					Note: Suggestions regarding the selection of a 95% UCL are provided to help the user to select the most appropriate 95% UCL.							
107					Recommendations are based upon data size, data distribution, and skewness.							
108					These recommendations are based upon the results of the simulation studies summarized in Singh, Maichle, and Lee (2006).							
109					However, simulations results will not cover all Real World data sets; for additional insight the user may want to consult a statistician.							
110												
111	**Ethylbenzene**											
112												
113						**General Statistics**						
114					Total Number of Observations	20				Number of Distinct Observations		18
115					Number of Detects	10				Number of Non-Detects		10
116					Number of Distinct Detects	10				Number of Distinct Non-Detects		8
117					Minimum Detect	0.024				Minimum Non-Detect		0.00683
118					Maximum Detect	51				Maximum Non-Detect		0.98
119					Variance Detects	324.3				Percent Non-Detects		50%
120					Mean Detects	11.55				SD Detects		18.01
121					Median Detects	2.715				CV Detects		1.559
122					Skewness Detects	1.723				Kurtosis Detects		1.829
123					Mean of Logged Detects	0.441				SD of Logged Detects		2.855
124												
125						**Normal GOF Test on Detects Only**						
126					Shapiro Wilk Test Statistic	0.695				**Shapiro Wilk GOF Test**		
127					5% Shapiro Wilk Critical Value	0.842				Detected Data Not Normal at 5% Significance Level		
128					Lilliefors Test Statistic	0.296				**Lilliefors GOF Test**		
129					5% Lilliefors Critical Value	0.28				Detected Data Not Normal at 5% Significance Level		
130						**Detected Data Not Normal at 5% Significance Level**						
131												
132						**Kaplan-Meier (KM) Statistics using Normal Critical Values and other Nonparametric UCLs**						
133					Mean	5.779				Standard Error of Mean		3.155
134					SD	13.39				95% KM (BCA) UCL		11.44
135					95% KM (t) UCL	11.24				95% KM (Percentile Bootstrap) UCL		11.52
136					95% KM (z) UCL	10.97				95% KM Bootstrap t UCL		27.97
137					90% KM Chebyshev UCL	15.25				95% KM Chebyshev UCL		19.53
138					97.5% KM Chebyshev UCL	25.48				99% KM Chebyshev UCL		37.18
139												
140						**Gamma GOF Tests on Detected Observations Only**						
141					A-D Test Statistic	0.311				**Anderson-Darling GOF Test**		
142					5% A-D Critical Value	0.807				Detected data appear Gamma Distributed at 5% Significance Level		
143					K-S Test Statistic	0.171				**Kolmogrov-Smirnoff GOF**		
144					5% K-S Critical Value	0.287				Detected data appear Gamma Distributed at 5% Significance Level		
145						**Detected data appear Gamma Distributed at 5% Significance Level**						
146												
147						**Gamma Statistics on Detected Data Only**						
148					k hat (MLE)	0.337				k star (bias corrected MLE)		0.303
149					Theta hat (MLE)	34.24				Theta star (bias corrected MLE)		38.14
150					nu hat (MLE)	6.746				nu star (bias corrected)		6.055

	A	B	C	D	E	F	G	H	I	J	K	L
151					MLE Mean (bias corrected)	11.55				MLE Sd (bias corrected)		20.99
152												
153					Gamma Kaplan-Meier (KM) Statistics							
154					k hat (KM)	0.186				nu hat (KM)		7.454
155					Approximate Chi Square Value (7.45, α)	2.423				Adjusted Chi Square Value (7.45, β)		2.202
156					95% Gamma Approximate KM-UCL (use when n>=50)	17.78				95% Gamma Adjusted KM-UCL (use when n<50)		19.56
157												
158					Gamma ROS Statistics using Imputed Non-Detects							
159					GROS may not be used when data set has > 50% NDs with many tied observations at multiple DLs							
160					GROS may not be used when kstar of detected data is small such as < 0.1							
161					For such situations, GROS method tends to yield inflated values of UCLs and BTVs							
162					For gamma distributed detected data, BTVs and UCLs may be computed using gamma distribution on KM estimates							
163					Minimum	0.01				Mean		5.779
164					Maximum	51				Median		0.017
165					SD	13.74				CV		2.377
166					k hat (MLE)	0.193				k star (bias corrected MLE)		0.197
167					Theta hat (MLE)	29.96				Theta star (bias corrected MLE)		29.29
168					nu hat (MLE)	7.716				nu star (bias corrected)		7.892
169					MLE Mean (bias corrected)	5.779				MLE Sd (bias corrected)		13.01
170										Adjusted Level of Significance (β)		0.038
171					Approximate Chi Square Value (7.89, α)	2.673				Adjusted Chi Square Value (7.89, β)		2.438
172					95% Gamma Approximate UCL (use when n>=50)	17.06				95% Gamma Adjusted UCL (use when n<50)		18.71
173												
174					Lognormal GOF Test on Detected Observations Only							
175					Shapiro Wilk Test Statistic	0.891				Shapiro Wilk GOF Test		
176					5% Shapiro Wilk Critical Value	0.842				Detected Data appear Lognormal at 5% Significance Level		
177					Lilliefors Test Statistic	0.201				Lilliefors GOF Test		
178					5% Lilliefors Critical Value	0.28				Detected Data appear Lognormal at 5% Significance Level		
179					Detected Data appear Lognormal at 5% Significance Level							
180												
181					Lognormal ROS Statistics Using Imputed Non-Detects							
182					Mean in Original Scale	5.775				Mean in Log Scale		-3.011
183					SD in Original Scale	13.74				SD in Log Scale		4.137
184					95% t UCL (assumes normality of ROS data)	11.09				95% Percentile Bootstrap UCL		10.82
185					95% BCA Bootstrap UCL	13.14				95% Bootstrap t UCL		27.91
186					95% H-UCL (Log ROS)	495136						
187												
188					UCLs using Lognormal Distribution and KM Estimates when Detected data are Lognormally Distributed							
189					KM Mean (logged)	-2.177				95% H-UCL (KM -Log)		3459
190					KM SD (logged)	3.265				95% Critical H Value (KM-Log)		6.668
191					KM Standard Error of Mean (logged)	0.775						
192												
193					DL/2 Statistics							
194					DL/2 Normal					DL/2 Log-Transformed		
195					Mean in Original Scale	5.807				Mean in Log Scale		-1.977
196					SD in Original Scale	13.72				SD in Log Scale		3.397
197					95% t UCL (Assumes normality)	11.11				95% H-Stat UCL		9777
198					DL/2 is not a recommended method, provided for comparisons and historical reasons							
199												
200					Nonparametric Distribution Free UCL Statistics							

	A	B	C	D	E	F	G	H	I	J	K	L
201	**Detected Data appear Gamma Distributed at 5% Significance Level**											
202												
203	**Suggested UCL to Use**											
204					95% KM (t) UCL	11.24			95% GROS Adjusted Gamma UCL			18.71
205					95% Adjusted Gamma KM-UCL	19.56						
206												
207	Note: Suggestions regarding the selection of a 95% UCL are provided to help the user to select the most appropriate 95% UCL.											
208	Recommendations are based upon data size, data distribution, and skewness.											
209	These recommendations are based upon the results of the simulation studies summarized in Singh, Maichle, and Lee (2006).											
210	However, simulations results will not cover all Real World data sets; for additional insight the user may want to consult a statistician.											
211												
212	**Napthalene**											
213												
214	**General Statistics**											
215					Total Number of Observations	20			Number of Distinct Observations			18
216					Number of Detects	14			Number of Non-Detects			6
217					Number of Distinct Detects	14			Number of Distinct Non-Detects			4
218					Minimum Detect	0.0773			Minimum Non-Detect			0.0137
219					Maximum Detect	1860			Maximum Non-Detect			0.0149
220					Variance Detects	252976			Percent Non-Detects			30%
221					Mean Detects	269.9			SD Detects			503
222					Median Detects	11.65			CV Detects			1.864
223					Skewness Detects	2.753			Kurtosis Detects			8.485
224					Mean of Logged Detects	2.56			SD of Logged Detects			3.464
225												
226	**Normal GOF Test on Detects Only**											
227					Shapiro Wilk Test Statistic	0.601			**Shapiro Wilk GOF Test**			
228					5% Shapiro Wilk Critical Value	0.874			Detected Data Not Normal at 5% Significance Level			
229					Lilliefors Test Statistic	0.296			**Lilliefors GOF Test**			
230					5% Lilliefors Critical Value	0.237			Detected Data Not Normal at 5% Significance Level			
231	**Detected Data Not Normal at 5% Significance Level**											
232												
233	**Kaplan-Meier (KM) Statistics using Normal Critical Values and other Nonparametric UCLs**											
234					Mean	188.9			Standard Error of Mean			98.38
235					SD	423.9			95% KM (BCA) UCL			388
236					95% KM (t) UCL	359			95% KM (Percentile Bootstrap) UCL			365.8
237					95% KM (z) UCL	350.7			95% KM Bootstrap t UCL			576.9
238					90% KM Chebyshev UCL	484			95% KM Chebyshev UCL			617.7
239					97.5% KM Chebyshev UCL	803.3			99% KM Chebyshev UCL			1168
240												
241	**Gamma GOF Tests on Detected Observations Only**											
242					A-D Test Statistic	0.623			**Anderson-Darling GOF Test**			
243					5% A-D Critical Value	0.862			Detected data appear Gamma Distributed at 5% Significance Level			
244					K-S Test Statistic	0.194			**Kolmogrov-Smirnoff GOF**			
245					5% K-S Critical Value	0.251			Detected data appear Gamma Distributed at 5% Significance Level			
246	**Detected data appear Gamma Distributed at 5% Significance Level**											
247												
248	**Gamma Statistics on Detected Data Only**											
249					k hat (MLE)	0.236			k star (bias corrected MLE)			0.233
250					Theta hat (MLE)	1144			Theta star (bias corrected MLE)			1158

	A	B	C	D	E	F	G	H	I	J	K	L
251					nu hat (MLE)	6.608					nu star (bias corrected)	6.525
252					MLE Mean (bias corrected)	269.9					MLE Sd (bias corrected)	559
253												
254					**Gamma Kaplan-Meier (KM) Statistics**							
255					k hat (KM)	0.199					nu hat (KM)	7.943
256					Approximate Chi Square Value (7.94, α)	2.702					Adjusted Chi Square Value (7.94, β)	2.466
257					95% Gamma Approximate KM-UCL (use when n>=50)	555.3					95% Gamma Adjusted KM-UCL (use when n<50)	608.5
258												
259					**Gamma ROS Statistics using Imputed Non-Detects**							
260					GROS may not be used when data set has > 50% NDs with many tied observations at multiple DLs							
261					GROS may not be used when kstar of detected data is small such as < 0.1							
262					For such situations, GROS method tends to yield inflated values of UCLs and BTVs							
263					For gamma distributed detected data, BTVs and UCLs may be computed using gamma distribution on KM estimates							
264					Minimum	0.01					Mean	188.9
265					Maximum	1860					Median	0.853
266					SD	435					CV	2.302
267					k hat (MLE)	0.158					k star (bias corrected MLE)	0.168
268					Theta hat (MLE)	1196					Theta star (bias corrected MLE)	1127
269					nu hat (MLE)	6.317					nu star (bias corrected)	6.702
270					MLE Mean (bias corrected)	188.9					MLE Sd (bias corrected)	461.5
271											Adjusted Level of Significance (β)	0.038
272					Approximate Chi Square Value (6.70, α)	2.009					Adjusted Chi Square Value (6.70, β)	1.812
273					95% Gamma Approximate UCL (use when n>=50)	630.4					95% Gamma Adjusted UCL (use when n<50)	698.6
274												
275					**Lognormal GOF Test on Detected Observations Only**							
276					Shapiro Wilk Test Statistic	0.912					**Shapiro Wilk GOF Test**	
277					5% Shapiro Wilk Critical Value	0.874					Detected Data appear Lognormal at 5% Significance Level	
278					Lilliefors Test Statistic	0.188					**Lilliefors GOF Test**	
279					5% Lilliefors Critical Value	0.237					Detected Data appear Lognormal at 5% Significance Level	
280					**Detected Data appear Lognormal at 5% Significance Level**							
281												
282					**Lognormal ROS Statistics Using Imputed Non-Detects**							
283					Mean in Original Scale	188.9					Mean in Log Scale	0.102
284					SD in Original Scale	435					SD in Log Scale	4.839
285					95% t UCL (assumes normality of ROS data)	357.1					95% Percentile Bootstrap UCL	365.6
286					95% BCA Bootstrap UCL	493.1					95% Bootstrap t UCL	592.7
287					95% H-UCL (Log ROS)	6.783E+9						
288												
289					**UCLs using Lognormal Distribution and KM Estimates when Detected data are Lognormally Distributed**							
290					KM Mean (logged)	0.504					95% H-UCL (KM -Log)	28930963
291					KM SD (logged)	4.203					95% Critical H Value (KM-Log)	8.134
292					KM Standard Error of Mean (logged)	0.975						
293												
294					**DL/2 Statistics**							
295					**DL/2 Normal**						**DL/2 Log-Transformed**	
296					Mean in Original Scale	188.9					Mean in Log Scale	0.306
297					SD in Original Scale	435					SD in Log Scale	4.549
298					95% t UCL (Assumes normality)	357.1					95% H-Stat UCL	6.009E+8
299					**DL/2 is not a recommended method, provided for comparisons and historical reasons**							
300												

	A	B	C	D	E	F	G	H	I	J	K	L
301	Nonparametric Distribution Free UCL Statistics											
302	Detected Data appear Gamma Distributed at 5% Significance Level											
303												
304	Suggested UCL to Use											
305					95% KM (BCA) UCL	388			95% GROS Adjusted Gamma UCL			698.6
306					95% Adjusted Gamma KM-UCL	608.5						
307												
308	Note: Suggestions regarding the selection of a 95% UCL are provided to help the user to select the most appropriate 95% UCL.											
309	Recommendations are based upon data size, data distribution, and skewness.											
310	These recommendations are based upon the results of the simulation studies summarized in Singh, Maichle, and Lee (2006).											
311	However, simulations results will not cover all Real World data sets; for additional insight the user may want to consult a statistician.											
312												
313	Styrene											
314												
315	General Statistics											
316					Total Number of Observations	20			Number of Distinct Observations			18
317					Number of Detects	6			Number of Non-Detects			14
318					Number of Distinct Detects	6			Number of Distinct Non-Detects			12
319					Minimum Detect	0.0749			Minimum Non-Detect			0.00341
320					Maximum Detect	13.2			Maximum Non-Detect			25.5
321					Variance Detects	23.32			Percent Non-Detects			70%
322					Mean Detects	3.73			SD Detects			4.829
323					Median Detects	2.33			CV Detects			1.295
324					Skewness Detects	2.038			Kurtosis Detects			4.459
325					Mean of Logged Detects	0.43			SD of Logged Detects			1.769
326												
327	Normal GOF Test on Detects Only											
328					Shapiro Wilk Test Statistic	0.754			Shapiro Wilk GOF Test			
329					5% Shapiro Wilk Critical Value	0.788			Detected Data Not Normal at 5% Significance Level			
330					Lilliefors Test Statistic	0.329			Lilliefors GOF Test			
331					5% Lilliefors Critical Value	0.362			Detected Data appear Normal at 5% Significance Level			
332	Detected Data appear Approximate Normal at 5% Significance Level											
333												
334	Kaplan-Meier (KM) Statistics using Normal Critical Values and other Nonparametric UCLs											
335					Mean	1.184			Standard Error of Mean			0.759
336					SD	3.022			95% KM (BCA) UCL			2.566
337					95% KM (t) UCL	2.497			95% KM (Percentile Bootstrap) UCL			2.441
338					95% KM (z) UCL	2.433			95% KM Bootstrap t UCL			4.07
339					90% KM Chebyshev UCL	3.462			95% KM Chebyshev UCL			4.494
340					97.5% KM Chebyshev UCL	5.927			99% KM Chebyshev UCL			8.74
341												
342	Gamma GOF Tests on Detected Observations Only											
343					A-D Test Statistic	0.203			Anderson-Darling GOF Test			
344					5% A-D Critical Value	0.725			Detected data appear Gamma Distributed at 5% Significance Level			
345					K-S Test Statistic	0.171			Kolmogrov-Smirnoff GOF			
346					5% K-S Critical Value	0.345			Detected data appear Gamma Distributed at 5% Significance Level			
347	Detected data appear Gamma Distributed at 5% Significance Level											
348												
349	Gamma Statistics on Detected Data Only											
350					k hat (MLE)	0.684			k star (bias corrected MLE)			0.453

	A–E	F	G–K	L
351	Theta hat (MLE)	5.455	Theta star (bias corrected MLE)	8.234
352	nu hat (MLE)	8.205	nu star (bias corrected)	5.436
353	MLE Mean (bias corrected)	3.73	MLE Sd (bias corrected)	5.542
354				
355	**Gamma Kaplan-Meier (KM) Statistics**			
356	k hat (KM)	0.153	nu hat (KM)	6.137
357	Approximate Chi Square Value (6.14, α)	1.711	Adjusted Chi Square Value (6.14, β)	1.533
358	95% Gamma Approximate KM-UCL (use when n>=50)	4.247	95% Gamma Adjusted KM-UCL (use when n<50)	4.738
359				
360	**Gamma ROS Statistics using Imputed Non-Detects**			
361	GROS may not be used when data set has > 50% NDs with many tied observations at multiple DLs			
362	GROS may not be used when kstar of detected data is small such as < 0.1			
363	For such situations, GROS method tends to yield inflated values of UCLs and BTVs			
364	For gamma distributed detected data, BTVs and UCLs may be computed using gamma distribution on KM estimates			
365	Minimum	0.01	Mean	1.126
366	Maximum	13.2	Median	0.01
367	SD	3.032	CV	2.693
368	k hat (MLE)	0.225	k star (bias corrected MLE)	0.224
369	Theta hat (MLE)	5.008	Theta star (bias corrected MLE)	5.017
370	nu hat (MLE)	8.993	nu star (bias corrected)	8.978
371	MLE Mean (bias corrected)	1.126	MLE Sd (bias corrected)	2.377
372			Adjusted Level of Significance (β)	0.038
373	Approximate Chi Square Value (8.98, α)	3.313	Adjusted Chi Square Value (8.98, β)	3.046
374	95% Gamma Approximate UCL (use when n>=50)	3.051	95% Gamma Adjusted UCL (use when n<50)	3.318
375				
376	**Lognormal GOF Test on Detected Observations Only**			
377	Shapiro Wilk Test Statistic	0.943	**Shapiro Wilk GOF Test**	
378	5% Shapiro Wilk Critical Value	0.788	Detected Data appear Lognormal at 5% Significance Level	
379	Lilliefors Test Statistic	0.224	**Lilliefors GOF Test**	
380	5% Lilliefors Critical Value	0.362	Detected Data appear Lognormal at 5% Significance Level	
381	**Detected Data appear Lognormal at 5% Significance Level**			
382				
383	**Lognormal ROS Statistics Using Imputed Non-Detects**			
384	Mean in Original Scale	1.125	Mean in Log Scale	-3.409
385	SD in Original Scale	3.033	SD in Log Scale	2.823
386	95% t UCL (assumes normality of ROS data)	2.298	95% Percentile Bootstrap UCL	2.347
387	95% BCA Bootstrap UCL	3.259	95% Bootstrap t UCL	5.135
388	95% H-UCL (Log ROS)	77.65		
389				
390	**UCLs using Lognormal Distribution and KM Estimates when Detected data are Lognormally Distributed**			
391	KM Mean (logged)	-3.688	95% H-UCL (KM -Log)	139.7
392	KM SD (logged)	2.98	95% Critical H Value (KM-Log)	6.125
393	KM Standard Error of Mean (logged)	0.759		
394				
395	**DL/2 Statistics**			
396	**DL/2 Normal**		**DL/2 Log-Transformed**	
397	Mean in Original Scale	1.805	Mean in Log Scale	-2.78
398	SD in Original Scale	3.96	SD in Log Scale	3.253
399	95% t UCL (Assumes normality)	3.336	95% H-Stat UCL	1755
400	**DL/2 is not a recommended method, provided for comparisons and historical reasons**			

	A	B	C	D	E	F	G	H	I	J	K	L
401												
402	**Nonparametric Distribution Free UCL Statistics**											
403	**Detected Data appear Approximate Normal Distributed at 5% Significance Level**											
404												
405	**Suggested UCL to Use**											
406					95% KM (t) UCL	2.497			95% KM (Percentile Bootstrap) UCL			2.441
407												
408	Note: Suggestions regarding the selection of a 95% UCL are provided to help the user to select the most appropriate 95% UCL.											
409	Recommendations are based upon data size, data distribution, and skewness.											
410	These recommendations are based upon the results of the simulation studies summarized in Singh, Maichle, and Lee (2006).											
411	However, simulations results will not cover all Real World data sets; for additional insight the user may want to consult a statistician.											
412												
413	Xylenes											
414												
415	**General Statistics**											
416					Total Number of Observations	20			Number of Distinct Observations			17
417					Number of Detects	11			Number of Non-Detects			9
418					Number of Distinct Detects	11			Number of Distinct Non-Detects			6
419					Minimum Detect	0.0312			Minimum Non-Detect			0.0082
420					Maximum Detect	232			Maximum Non-Detect			0.0411
421					Variance Detects	6420			Percent Non-Detects			45%
422					Mean Detects	54.26			SD Detects			80.13
423					Median Detects	10.5			CV Detects			1.477
424					Skewness Detects	1.559			Kurtosis Detects			1.393
425					Mean of Logged Detects	1.604			SD of Logged Detects			3.283
426												
427	**Normal GOF Test on Detects Only**											
428					Shapiro Wilk Test Statistic	0.737			**Shapiro Wilk GOF Test**			
429					5% Shapiro Wilk Critical Value	0.85			Detected Data Not Normal at 5% Significance Level			
430					Lilliefors Test Statistic	0.268			**Lilliefors GOF Test**			
431					5% Lilliefors Critical Value	0.267			Detected Data Not Normal at 5% Significance Level			
432	**Detected Data Not Normal at 5% Significance Level**											
433												
434	**Kaplan-Meier (KM) Statistics using Normal Critical Values and other Nonparametric UCLs**											
435					Mean	29.85			Standard Error of Mean			14.72
436					SD	62.76			95% KM (BCA) UCL			58.29
437					95% KM (t) UCL	55.3			95% KM (Percentile Bootstrap) UCL			55.37
438					95% KM (z) UCL	54.06			95% KM Bootstrap t UCL			91.63
439					90% KM Chebyshev UCL	74			95% KM Chebyshev UCL			94
440					97.5% KM Chebyshev UCL	121.8			99% KM Chebyshev UCL			176.3
441												
442	**Gamma GOF Tests on Detected Observations Only**											
443					A-D Test Statistic	0.345			**Anderson-Darling GOF Test**			
444					5% A-D Critical Value	0.824			Detected data appear Gamma Distributed at 5% Significance Level			
445					K-S Test Statistic	0.187			**Kolmogrov-Smirnoff GOF**			
446					5% K-S Critical Value	0.276			Detected data appear Gamma Distributed at 5% Significance Level			
447	**Detected data appear Gamma Distributed at 5% Significance Level**											
448												
449	**Gamma Statistics on Detected Data Only**											
450					k hat (MLE)	0.29			k star (bias corrected MLE)			0.272

	A–E	F	G–K	L
451	Theta hat (MLE)	187	Theta star (bias corrected MLE)	199.8
452	nu hat (MLE)	6.383	nu star (bias corrected)	5.976
453	MLE Mean (bias corrected)	54.26	MLE Sd (bias corrected)	104.1
454				
455	**Gamma Kaplan-Meier (KM) Statistics**			
456	k hat (KM)	0.226	nu hat (KM)	9.047
457	Approximate Chi Square Value (9.05, α)	3.356	Adjusted Chi Square Value (9.05, β)	3.086
458	95% Gamma Approximate KM-UCL (use when n>=50)	80.47	95% Gamma Adjusted KM-UCL (use when n<50)	87.49
459				
460	**Gamma ROS Statistics using Imputed Non-Detects**			
461	GROS may not be used when data set has > 50% NDs with many tied observations at multiple DLs			
462	GROS may not be used when kstar of detected data is small such as < 0.1			
463	For such situations, GROS method tends to yield inflated values of UCLs and BTVs			
464	For gamma distributed detected data, BTVs and UCLs may be computed using gamma distribution on KM estimates			
465	Minimum	0.01	Mean	29.85
466	Maximum	232	Median	0.0661
467	SD	64.39	CV	2.157
468	k hat (MLE)	0.165	k star (bias corrected MLE)	0.174
469	Theta hat (MLE)	180.6	Theta star (bias corrected MLE)	171.8
470	nu hat (MLE)	6.609	nu star (bias corrected)	6.951
471	MLE Mean (bias corrected)	29.85	MLE Sd (bias corrected)	71.6
472			Adjusted Level of Significance (β)	0.038
473	Approximate Chi Square Value (6.95, α)	2.144	Adjusted Chi Square Value (6.95, β)	1.939
474	95% Gamma Approximate UCL (use when n>=50)	96.78	95% Gamma Adjusted UCL (use when n<50)	107
475				
476	**Lognormal GOF Test on Detected Observations Only**			
477	Shapiro Wilk Test Statistic	0.891	**Shapiro Wilk GOF Test**	
478	5% Shapiro Wilk Critical Value	0.85	Detected Data appear Lognormal at 5% Significance Level	
479	Lilliefors Test Statistic	0.183	**Lilliefors GOF Test**	
480	5% Lilliefors Critical Value	0.267	Detected Data appear Lognormal at 5% Significance Level	
481	**Detected Data appear Lognormal at 5% Significance Level**			
482				
483	**Lognormal ROS Statistics Using Imputed Non-Detects**			
484	Mean in Original Scale	29.84	Mean in Log Scale	-2.112
485	SD in Original Scale	64.39	SD in Log Scale	4.936
486	95% t UCL (assumes normality of ROS data)	54.74	95% Percentile Bootstrap UCL	54.64
487	95% BCA Bootstrap UCL	61.63	95% Bootstrap t UCL	86.25
488	95% H-UCL (Log ROS)	1.779E+9		
489				
490	**UCLs using Lognormal Distribution and KM Estimates when Detected data are Lognormally Distributed**			
491	KM Mean (logged)	-1.272	95% H-UCL (KM -Log)	642511
492	KM SD (logged)	3.938	95% Critical H Value (KM-Log)	7.626
493	KM Standard Error of Mean (logged)	0.924		
494				
495	**DL/2 Statistics**			
496	**DL/2 Normal**		**DL/2 Log-Transformed**	
497	Mean in Original Scale	29.85	Mean in Log Scale	-1.499
498	SD in Original Scale	64.39	SD in Log Scale	4.263
499	95% t UCL (Assumes normality)	54.74	95% H-Stat UCL	6614375
500	**DL/2 is not a recommended method, provided for comparisons and historical reasons**			

	A	B	C	D	E	F	G	H	I	J	K	L
501												
502	**Nonparametric Distribution Free UCL Statistics**											
503	**Detected Data appear Gamma Distributed at 5% Significance Level**											
504												
505	**Suggested UCL to Use**											
506					95% KM (BCA) UCL	58.29			95% GROS Adjusted Gamma UCL			107
507					95% Adjusted Gamma KM-UCL	87.49						
508												
509	Note: Suggestions regarding the selection of a 95% UCL are provided to help the user to select the most appropriate 95% UCL.											
510	Recommendations are based upon data size, data distribution, and skewness.											
511	These recommendations are based upon the results of the simulation studies summarized in Singh, Maichle, and Lee (2006).											
512	However, simulations results will not cover all Real World data sets; for additional insight the user may want to consult a statistician.											
513												
514	**1,2,3-trimethylbenzene**											
515												
516	**General Statistics**											
517					Total Number of Observations	20			Number of Distinct Observations			18
518					Number of Detects	14			Number of Non-Detects			6
519					Number of Distinct Detects	14			Number of Distinct Non-Detects			4
520					Minimum Detect	0.0114			Minimum Non-Detect			0.00171
521					Maximum Detect	353			Maximum Non-Detect			0.00186
522					Variance Detects	13087			Percent Non-Detects			30%
523					Mean Detects	74.07			SD Detects			114.4
524					Median Detects	10.79			CV Detects			1.544
525					Skewness Detects	1.614			Kurtosis Detects			1.643
526					Mean of Logged Detects	1.226			SD of Logged Detects			3.763
527												
528	**Normal GOF Test on Detects Only**											
529					Shapiro Wilk Test Statistic	0.716			**Shapiro Wilk GOF Test**			
530					5% Shapiro Wilk Critical Value	0.874			Detected Data Not Normal at 5% Significance Level			
531					Lilliefors Test Statistic	0.272			**Lilliefors GOF Test**			
532					5% Lilliefors Critical Value	0.237			Detected Data Not Normal at 5% Significance Level			
533	**Detected Data Not Normal at 5% Significance Level**											
534												
535	**Kaplan-Meier (KM) Statistics using Normal Critical Values and other Nonparametric UCLs**											
536					Mean	51.85			Standard Error of Mean			22.81
537					SD	98.28			95% KM (BCA) UCL			91.73
538					95% KM (t) UCL	91.29			95% KM (Percentile Bootstrap) UCL			90.65
539					95% KM (z) UCL	89.37			95% KM Bootstrap t UCL			118.3
540					90% KM Chebyshev UCL	120.3			95% KM Chebyshev UCL			151.3
541					97.5% KM Chebyshev UCL	194.3			99% KM Chebyshev UCL			278.8
542												
543	**Gamma GOF Tests on Detected Observations Only**											
544					A-D Test Statistic	0.579			**Anderson-Darling GOF Test**			
545					5% A-D Critical Value	0.864			Detected data appear Gamma Distributed at 5% Significance Level			
546					K-S Test Statistic	0.239			**Kolmogrov-Smirnoff GOF**			
547					5% K-S Critical Value	0.251			Detected data appear Gamma Distributed at 5% Significance Level			
548	**Detected data appear Gamma Distributed at 5% Significance Level**											
549												
550	**Gamma Statistics on Detected Data Only**											

	A–E	F	G–K	L
551	k hat (MLE)	0.233	k star (bias corrected MLE)	0.231
552	Theta hat (MLE)	317.5	Theta star (bias corrected MLE)	320.8
553	nu hat (MLE)	6.532	nu star (bias corrected)	6.466
554	MLE Mean (bias corrected)	74.07	MLE Sd (bias corrected)	154.1
555				
556	**Gamma Kaplan-Meier (KM) Statistics**			
557	k hat (KM)	0.278	nu hat (KM)	11.13
558	Approximate Chi Square Value (11.13, α)	4.663	Adjusted Chi Square Value (11.13, β)	4.335
559	95% Gamma Approximate KM-UCL (use when n>=50)	123.8	95% Gamma Adjusted KM-UCL (use when n<50)	133.2
560				
561	**Gamma ROS Statistics using Imputed Non-Detects**			
562	GROS may not be used when data set has > 50% NDs with many tied observations at multiple DLs			
563	GROS may not be used when kstar of detected data is small such as < 0.1			
564	For such situations, GROS method tends to yield inflated values of UCLs and BTVs			
565	For gamma distributed detected data, BTVs and UCLs may be computed using gamma distribution on KM estimates			
566	Minimum	0.01	Mean	51.86
567	Maximum	353	Median	0.371
568	SD	100.8	CV	1.944
569	k hat (MLE)	0.169	k star (bias corrected MLE)	0.177
570	Theta hat (MLE)	307	Theta star (bias corrected MLE)	293.1
571	nu hat (MLE)	6.756	nu star (bias corrected)	7.076
572	MLE Mean (bias corrected)	51.86	MLE Sd (bias corrected)	123.3
573			Adjusted Level of Significance (β)	0.038
574	Approximate Chi Square Value (7.08, α)	2.212	Adjusted Chi Square Value (7.08, β)	2.004
575	95% Gamma Approximate UCL (use when n>=50)	165.9	95% Gamma Adjusted UCL (use when n<50)	183.1
576				
577	**Lognormal GOF Test on Detected Observations Only**			
578	Shapiro Wilk Test Statistic	0.892	**Shapiro Wilk GOF Test**	
579	5% Shapiro Wilk Critical Value	0.874	Detected Data appear Lognormal at 5% Significance Level	
580	Lilliefors Test Statistic	0.185	**Lilliefors GOF Test**	
581	5% Lilliefors Critical Value	0.237	Detected Data appear Lognormal at 5% Significance Level	
582	**Detected Data appear Lognormal at 5% Significance Level**			
583				
584	**Lognormal ROS Statistics Using Imputed Non-Detects**			
585	Mean in Original Scale	51.85	Mean in Log Scale	-1.392
586	SD in Original Scale	100.8	SD in Log Scale	5.19
587	95% t UCL (assumes normality of ROS data)	90.84	95% Percentile Bootstrap UCL	90.13
588	95% BCA Bootstrap UCL	99.59	95% Bootstrap t UCL	118
589	95% H-UCL (Log ROS)	4.150E+10		
590				
591	**UCLs using Lognormal Distribution and KM Estimates when Detected data are Lognormally Distributed**			
592	KM Mean (logged)	-1.054	95% H-UCL (KM -Log)	2.900E+8
593	KM SD (logged)	4.619	95% Critical H Value (KM-Log)	9.316
594	KM Standard Error of Mean (logged)	1.072		
595				
596	**DL/2 Statistics**			
597	**DL/2 Normal**		**DL/2 Log-Transformed**	
598	Mean in Original Scale	51.85	Mean in Log Scale	-1.252
599	SD in Original Scale	100.8	SD in Log Scale	4.977
600	95% t UCL (Assumes normality)	90.84	95% H-Stat UCL	6.119E+9

	A	B	C	D	E	F	G	H	I	J	K	L
601	DL/2 is not a recommended method, provided for comparisons and historical reasons											
602												
603	Nonparametric Distribution Free UCL Statistics											
604	Detected Data appear Gamma Distributed at 5% Significance Level											
605												
606	Suggested UCL to Use											
607					95% KM (BCA) UCL	91.73			95% GROS Adjusted Gamma UCL			183.1
608					95% Adjusted Gamma KM-UCL	133.2						
609												
610	Note: Suggestions regarding the selection of a 95% UCL are provided to help the user to select the most appropriate 95% UCL.											
611	Recommendations are based upon data size, data distribution, and skewness.											
612	These recommendations are based upon the results of the simulation studies summarized in Singh, Maichle, and Lee (2006).											
613	However, simulations results will not cover all Real World data sets; for additional insight the user may want to consult a statistician.											
614												
615	1,2,4-trimethylbenzene											
616												
617	General Statistics											
618					Total Number of Observations	20			Number of Distinct Observations			18
619					Number of Detects	14			Number of Non-Detects			6
620					Number of Distinct Detects	14			Number of Distinct Non-Detects			4
621					Minimum Detect	0.0169			Minimum Non-Detect			8.5313E-4
622					Maximum Detect	690			Maximum Non-Detect			9.2813E-4
623					Variance Detects	91633			Percent Non-Detects			30%
624					Mean Detects	228			SD Detects			302.7
625					Median Detects	27.08			CV Detects			1.328
626					Skewness Detects	0.749			Kurtosis Detects			-1.531
627					Mean of Logged Detects	2.123			SD of Logged Detects			4.073
628												
629	Normal GOF Test on Detects Only											
630					Shapiro Wilk Test Statistic	0.704			Shapiro Wilk GOF Test			
631					5% Shapiro Wilk Critical Value	0.874			Detected Data Not Normal at 5% Significance Level			
632					Lilliefors Test Statistic	0.34			Lilliefors GOF Test			
633					5% Lilliefors Critical Value	0.237			Detected Data Not Normal at 5% Significance Level			
634	Detected Data Not Normal at 5% Significance Level											
635												
636	Kaplan-Meier (KM) Statistics using Normal Critical Values and other Nonparametric UCLs											
637					Mean	159.6			Standard Error of Mean			61.6
638					SD	265.5			95% KM (BCA) UCL			259.1
639					95% KM (t) UCL	266.1			95% KM (Percentile Bootstrap) UCL			258.9
640					95% KM (z) UCL	260.9			95% KM Bootstrap t UCL			295.7
641					90% KM Chebyshev UCL	344.4			95% KM Chebyshev UCL			428.1
642					97.5% KM Chebyshev UCL	544.3			99% KM Chebyshev UCL			772.5
643												
644	Gamma GOF Tests on Detected Observations Only											
645					A-D Test Statistic	0.89			Anderson-Darling GOF Test			
646					5% A-D Critical Value	0.87			Detected Data Not Gamma Distributed at 5% Significance Level			
647					K-S Test Statistic	0.237			Kolmogrov-Smirnoff GOF			
648					5% K-S Critical Value	0.252			Detected data appear Gamma Distributed at 5% Significance Level			
649	Detected data follow Appr. Gamma Distribution at 5% Significance Level											
650												

	A	B	C	D	E	F	G	H	I	J	K	L
651						Gamma Statistics on Detected Data Only						
652					k hat (MLE)	0.219				k star (bias corrected MLE)		0.22
653					Theta hat (MLE)	1039				Theta star (bias corrected MLE)		1036
654					nu hat (MLE)	6.142				nu star (bias corrected)		6.16
655					MLE Mean (bias corrected)	228				MLE Sd (bias corrected)		486.1
656												
657						Gamma Kaplan-Meier (KM) Statistics						
658					k hat (KM)	0.361				nu hat (KM)		14.45
659					Approximate Chi Square Value (14.45, α)	6.884				Adjusted Chi Square Value (14.45, β)		6.473
660					95% Gamma Approximate KM-UCL (use when n>=50)	335.1				95% Gamma Adjusted KM-UCL (use when n<50)		356.3
661												
662						Gamma ROS Statistics using Imputed Non-Detects						
663						GROS may not be used when data set has > 50% NDs with many tied observations at multiple DLs						
664						GROS may not be used when kstar of detected data is small such as < 0.1						
665						For such situations, GROS method tends to yield inflated values of UCLs and BTVs						
666						For gamma distributed detected data, BTVs and UCLs may be computed using gamma distribution on KM estimates						
667					Minimum	0.0169				Mean		170.3
668					Maximum	690				Median		35.71
669					SD	266.2				CV		1.563
670					k hat (MLE)	0.272				k star (bias corrected MLE)		0.264
671					Theta hat (MLE)	626.7				Theta star (bias corrected MLE)		644.3
672					nu hat (MLE)	10.87				nu star (bias corrected)		10.57
673					MLE Mean (bias corrected)	170.3				MLE Sd (bias corrected)		331.3
674										Adjusted Level of Significance (β)		0.038
675					Approximate Chi Square Value (10.57, α)	4.303				Adjusted Chi Square Value (10.57, β)		3.991
676					95% Gamma Approximate UCL (use when n>=50)	418.5				95% Gamma Adjusted UCL (use when n<50)		451.2
677												
678						Lognormal GOF Test on Detected Observations Only						
679					Shapiro Wilk Test Statistic	0.866				Shapiro Wilk GOF Test		
680					5% Shapiro Wilk Critical Value	0.874				Detected Data Not Lognormal at 5% Significance Level		
681					Lilliefors Test Statistic	0.198				Lilliefors GOF Test		
682					5% Lilliefors Critical Value	0.237				Detected Data appear Lognormal at 5% Significance Level		
683						Detected Data appear Approximate Lognormal at 5% Significance Level						
684												
685						Lognormal ROS Statistics Using Imputed Non-Detects						
686					Mean in Original Scale	159.6				Mean in Log Scale		-0.662
687					SD in Original Scale	272.4				SD in Log Scale		5.556
688					95% t UCL (assumes normality of ROS data)	264.9				95% Percentile Bootstrap UCL		265.8
689					95% BCA Bootstrap UCL	268.3				95% Bootstrap t UCL		300.1
690					95% H-UCL (Log ROS)	3.643E+12						
691												
692						UCLs using Lognormal Distribution and KM Estimates when Detected data are Lognormally Distributed						
693					KM Mean (logged)	-0.634				95% H-UCL (KM -Log)		3.969E+11
694					KM SD (logged)	5.34				95% Critical H Value (KM-Log)		10.68
695					KM Standard Error of Mean (logged)	1.239						
696												
697						DL/2 Statistics						
698					DL/2 Normal					DL/2 Log-Transformed		
699					Mean in Original Scale	159.6				Mean in Log Scale		-0.832
700					SD in Original Scale	272.4				SD in Log Scale		5.727

	A	B	C	D	E	F	G	H	I	J	K	L
701					95% t UCL (Assumes normality)	264.9					95% H-Stat UCL	1.920E+13
702	**DL/2 is not a recommended method, provided for comparisons and historical reasons**											
703												
704	**Nonparametric Distribution Free UCL Statistics**											
705	**Detected Data appear Approximate Gamma Distributed at 5% Significance Level**											
706												
707	**Suggested UCL to Use**											
708					95% KM (BCA) UCL	259.1					95% GROS Adjusted Gamma UCL	451.2
709					95% Adjusted Gamma KM-UCL	356.3						
710												
711	Note: Suggestions regarding the selection of a 95% UCL are provided to help the user to select the most appropriate 95% UCL.											
712	Recommendations are based upon data size, data distribution, and skewness.											
713	These recommendations are based upon the results of the simulation studies summarized in Singh, Maichle, and Lee (2006).											
714	However, simulations results will not cover all Real World data sets; for additional insight the user may want to consult a statistician.											
715												
716	**1,3,5-trimethylbenzene**											
717												
718	**General Statistics**											
719					Total Number of Observations	20					Number of Distinct Observations	18
720					Number of Detects	12					Number of Non-Detects	8
721					Number of Distinct Detects	12					Number of Distinct Non-Detects	6
722					Minimum Detect	0.0187					Minimum Non-Detect	4.2656E-4
723					Maximum Detect	252					Maximum Non-Detect	0.0099
724					Variance Detects	6495					Percent Non-Detects	40%
725					Mean Detects	54.43					SD Detects	80.59
726					Median Detects	22.45					CV Detects	1.481
727					Skewness Detects	1.813					Kurtosis Detects	2.67
728					Mean of Logged Detects	1.712					SD of Logged Detects	3.199
729												
730	**Normal GOF Test on Detects Only**											
731					Shapiro Wilk Test Statistic	0.726					**Shapiro Wilk GOF Test**	
732					5% Shapiro Wilk Critical Value	0.859					Detected Data Not Normal at 5% Significance Level	
733					Lilliefors Test Statistic	0.25					**Lilliefors GOF Test**	
734					5% Lilliefors Critical Value	0.256					Detected Data appear Normal at 5% Significance Level	
735	**Detected Data appear Approximate Normal at 5% Significance Level**											
736												
737	**Kaplan-Meier (KM) Statistics using Normal Critical Values and other Nonparametric UCLs**											
738					Mean	32.66					Standard Error of Mean	15.29
739					SD	65.45					95% KM (BCA) UCL	61.42
740					95% KM (t) UCL	59.09					95% KM (Percentile Bootstrap) UCL	59.43
741					95% KM (z) UCL	57.8					95% KM Bootstrap t UCL	101.2
742					90% KM Chebyshev UCL	78.51					95% KM Chebyshev UCL	99.28
743					97.5% KM Chebyshev UCL	128.1					99% KM Chebyshev UCL	184.7
744												
745	**Gamma GOF Tests on Detected Observations Only**											
746					A-D Test Statistic	0.458					**Anderson-Darling GOF Test**	
747					5% A-D Critical Value	0.824					Detected data appear Gamma Distributed at 5% Significance Level	
748					K-S Test Statistic	0.225					**Kolmogrov-Smirnoff GOF**	
749					5% K-S Critical Value	0.265					Detected data appear Gamma Distributed at 5% Significance Level	
750	**Detected data appear Gamma Distributed at 5% Significance Level**											

	A	B	C	D	E	F	G	H	I	J	K	L
751												
752						**Gamma Statistics on Detected Data Only**						
753						k hat (MLE)	0.302			k star (bias corrected MLE)		0.282
754						Theta hat (MLE)	180.5			Theta star (bias corrected MLE)		193.2
755						nu hat (MLE)	7.236			nu star (bias corrected)		6.76
756						MLE Mean (bias corrected)	54.43			MLE Sd (bias corrected)		102.5
757												
758						**Gamma Kaplan-Meier (KM) Statistics**						
759						k hat (KM)	0.249			nu hat (KM)		9.958
760						Approximate Chi Square Value (9.96, α)	3.916			Adjusted Chi Square Value (9.96, β)		3.62
761						95% Gamma Approximate KM-UCL (use when n>=50)	83.05			95% Gamma Adjusted KM-UCL (use when n<50)		89.82
762												
763						**Gamma ROS Statistics using Imputed Non-Detects**						
764						GROS may not be used when data set has > 50% NDs with many tied observations at multiple DLs						
765						GROS may not be used when kstar of detected data is small such as < 0.1						
766						For such situations, GROS method tends to yield inflated values of UCLs and BTVs						
767						For gamma distributed detected data, BTVs and UCLs may be computed using gamma distribution on KM estimates						
768						Minimum	0.01			Mean		32.66
769						Maximum	252			Median		0.244
770						SD	67.15			CV		2.056
771						k hat (MLE)	0.175			k star (bias corrected MLE)		0.182
772						Theta hat (MLE)	187			Theta star (bias corrected MLE)		179.6
773						nu hat (MLE)	6.988			nu star (bias corrected)		7.273
774						MLE Mean (bias corrected)	32.66			MLE Sd (bias corrected)		76.59
775										Adjusted Level of Significance (β)		0.038
776						Approximate Chi Square Value (7.27, α)	2.322			Adjusted Chi Square Value (7.27, β)		2.107
777						95% Gamma Approximate UCL (use when n>=50)	102.3			95% Gamma Adjusted UCL (use when n<50)		112.8
778												
779						**Lognormal GOF Test on Detected Observations Only**						
780						Shapiro Wilk Test Statistic	0.891			**Shapiro Wilk GOF Test**		
781						5% Shapiro Wilk Critical Value	0.859			Detected Data appear Lognormal at 5% Significance Level		
782						Lilliefors Test Statistic	0.24			**Lilliefors GOF Test**		
783						5% Lilliefors Critical Value	0.256			Detected Data appear Lognormal at 5% Significance Level		
784						**Detected Data appear Lognormal at 5% Significance Level**						
785												
786						**Lognormal ROS Statistics Using Imputed Non-Detects**						
787						Mean in Original Scale	32.66			Mean in Log Scale		-1.357
788						SD in Original Scale	67.15			SD in Log Scale		4.607
789						95% t UCL (assumes normality of ROS data)	58.62			95% Percentile Bootstrap UCL		59.08
790						95% BCA Bootstrap UCL	66.06			95% Bootstrap t UCL		96.22
791						95% H-UCL (Log ROS)	1.915E+8					
792												
793						**UCLs using Lognormal Distribution and KM Estimates when Detected data are Lognormally Distributed**						
794						KM Mean (logged)	-2.077			95% H-UCL (KM -Log)		2.576E+10
795						KM SD (logged)	5.211			95% Critical H Value (KM-Log)		10.43
796						KM Standard Error of Mean (logged)	1.217					
797												
798						**DL/2 Statistics**						
799						**DL/2 Normal**				**DL/2 Log-Transformed**		
800						Mean in Original Scale	32.66			Mean in Log Scale		-2.038

	A	B	C	D	E	F	G	H	I	J	K	L
801					SD in Original Scale	67.15					SD in Log Scale	5.371
802					95% t UCL (Assumes normality)	58.62					95% H-Stat UCL	1.341E+11
803	**DL/2 is not a recommended method, provided for comparisons and historical reasons**											
804												
805	**Nonparametric Distribution Free UCL Statistics**											
806	**Detected Data appear Approximate Normal Distributed at 5% Significance Level**											
807												
808	**Suggested UCL to Use**											
809					95% KM (t) UCL	59.09					95% KM (Percentile Bootstrap) UCL	59.43
810												
811	Note: Suggestions regarding the selection of a 95% UCL are provided to help the user to select the most appropriate 95% UCL.											
812	Recommendations are based upon data size, data distribution, and skewness.											
813	These recommendations are based upon the results of the simulation studies summarized in Singh, Maichle, and Lee (2006).											
814	However, simulations results will not cover all Real World data sets; for additional insight the user may want to consult a statistician.											
815												

APPENDIX E

SOURCE OF TITLE
DEED BK. 2003 PAGE 18760

This Instrument Was Prepared By:

William S. Wright
Balch & Bingham LLP
P. O. Box 306
Birmingham, AL 35201

Send Tax Notice To:

Riverside Industries, LLC
202 Bear Creek Road
Tuscaloosa, AL 35405

Source of Title

Deed Book 2003
Page 16320

2003 18762
Recorded in the Above
DEED Book & Page
10-03-2003 10:15:59 AM
Source Of Title: 2003 / 18760
W. Hardy McCollum - Probate Judge
Tuscaloosa County, Alabama

STATUTORY WARRANTY DEED

STATE OF ALABAMA)
:
COUNTY OF TUSCALOOSA)

KNOW ALL MEN BY THESE PRESENTS:
THAT FOR AND IN CONSIDERATION of Ten and No/100 Dollars ($10.00) to **EASTMAN RESINS, INC.**, a Delaware corporation (herein referred to as "Grantor"), in hand paid by **RIVERSIDE INDUSTRIES, LLC**, an Alabama Limited Liability Co. (herein referred to as "Grantee"), the receipt whereof is acknowledged, Grantor hereby, grants, bargains, sells and conveys, subject to the matters set forth below, unto the Grantee the real estate situated in Tuscaloosa County, Alabama described on **Exhibit A** attached hereto, together with all easements and other appurtenances thereto, if any, and all mineral, mining, oil and gas rights held by Grantor, if any (the "Property");

RESERVING, HOWEVER, from this conveyance for Grantor and its heirs, personal representatives, successors and assigns a perpetual non-exclusive easement over and across and right of entry upon the Property to enter upon the Property from time to time to monitor the use and environmental condition of the Property, including, but not limited to, the performance of testing, inspection, monitoring, remediation, excavation, groundwater monitoring, drilling, and other reasonably necessary similar activities;

To the Grantee, its heirs, personal representatives, successors and assigns forever;

PROVIDED, HOWEVER, that Grantee, for itself and its heirs, personal representatives, successors and assigns, hereby covenants and agrees as follows:

Grantor has given notice to Grantee, and by this Deed hereby gives notice to Grantee's heirs, personal representatives, successors and assigns, that the Property has been used for industrial purposes and that there exist or may exist on the Property certain environmental conditions that render the Property unsuitable for any use other than industrial or limited commercial use;

AND WITHOUT LIMITING THE FOREGOING, Grantee, for itself and its heirs, successors and assigns hereby covenants and agrees as follows:

(i) that no part of the Property shall be used for any use or purpose whatsoever other than industrial purposes and uses or wholesale

commercial purposes limited to the bulk sale of industrial products manufactured or repackaged on the Property;

(ii) that no water or groundwater on, from or under the Property other than piped water from the local public water authority shall be used for any purpose whatsoever;

(iii) that the former wastewater impoundments as shown on the attached survey shall not be disturbed or excavated and no soil shall be removed from this area; and the other areas on the Property as shown on and described in the surveys attached hereto as **Exhibit B** shall not be disturbed or excavated, except for the sole purpose of installing a concrete or asphalt cover, and these areas shall not be disturbed or excavated and no soil may be removed from or disturbed at these areas at any point thereafter;

(iv) that each and every deed, lease, license, easement or other instrument relating to the use, occupancy, ownership or possession of the Property shall set forth in writing a general description of the environmental condition and past use of the Property and a complete disclosure of the restricted uses of the Property;

(v) that no part of the Property may be used for residential, recreational, governmental, educational, religious, child care, retail or commercial (except as set forth in (i) above) or other public use; and

(vi) that no part of the Property shall be used in any way that is prohibited under any restrictions placed on the Property by Grantor or by the Alabama Department of Environmental Management in connection with any participation of the Property in any "Brownfield" or similar arrangements.

THE CONVEYANCE HEREUNDER IS SUBJECT, HOWEVER, to the following:

1. Any lien or charge for general or special taxes or assessments not yet delinquent.

2. Encroachments, overlaps, boundary line disputes and other matters that would be revealed by an accurate survey or inspection of the Property.

3 Easements, covenants, reservations, conditions and restrictions of record.

IN WITNESS WHEREOF, Grantor has hereunto caused this conveyance to be executed effective as of September 30, 2003.

WITNESS:

EASTMAN RESINS, INC.

By: _____

Its: President

STATE OF Tennessee)

COUNTY OF Sullivan)

I, the undersigned, a Notary Public in and for said County in said State, hereby certify that Damon C. Warmack, whose name as President of **EASTMAN RESINS, INC.**, a corporation is signed to the foregoing instrument, and who is known to me, acknowledged before me on this day that, being informed of the contents of the instrument, he/she, as such officer and with full authority, executed the same voluntarily for and as the act of said Corporation.

Given under my hand this 25th day of September, 2003.

Pamela J Hendrick

NOTARY PUBLIC

[Notarial Seal]

My Commission expires: 8-4-04

2003 18764
Recorded in the Above
DEED Book & Page
10-03-2003 10:15:59 AM
Book/Pg: 2003/18762
Term/Cashier: SCAN1 / PatsyV
Tran: 4452.340684.388287
Recorded: 10-03-2003 10:16:23

DFE Deed Tax	120.00
PJF Probate Judge Fee	2.00
REC Recording Fee	48.50
SOT Source of Title	1.00

Total Fees: $ 171.50

Exhibit A
to Statutory Warranty Deed

PARCEL NO. 1

A parcel of land located in the Southeast Quarter and the Southeast Quarter of the Northeast Quarter of Section 36, Township 24 North, Range 4 East in Tuscaloosa County, Alabama and being more particularly described as follows:

As a starting point, start at the Northeast corner of the Northeast Quarter of the Southeast Quarter of said Section 36, said point being the POINT OF BEGINNING; thence run in a Southerly direction along the East boundary of said Section 36 for a distance of 1,457.89 feet to a point, said point being 30.96 feet North of Carthage Branch, the true and property line; thence run along a random traverse line for the following courses; with an interior angle of 119 degrees 06 minutes, run in a Southwesterly direction for a distance of 50.40 feet to a point; thence with an interior angle of 140 degrees 31 minutes, run in a Northwesterly direction for a distance of 114.33 feet to point; thence with an interior angle of 97 degrees 14 minutes, run in a Northeasterly direction for a distance of 51.63 feet to a point; thence with an interior angle of 236 degrees 55 minutes run in a Northwesterly direction for a distance of 45.35 feet to a point; thence with an interior angle of 207 degrees 35 minutes, run in a Northwesterly direction for a distance 124.34 feet to a point; thence with an interior angle of 157 degrees 03 minutes, run in a Southwesterly direction for a distance of 94.83 feet to a point; thence with an interior angle of 293 degrees 39 minutes, run in a Southeasterly direction for a distance 135.75 feet to a point; thence with an interior angle of 83 degrees 12 minutes, run in a Southwesterly direction for a distance of 58.21 feet to a point; thence with an interior angle of 181 degrees 34 minutes, run in a Southwesterly direction for a distance of 121.75 feet to a point; thence with an interior angle of 239 degrees 56 minutes, run in a Southeasterly direction for a distance of 159.51 feet to a point; thence with an interior angle of 71 degrees 27 minutes, run in a Northwesterly direction for a distance of 159.51 feet to a point; thence with an interior angle of 91 degrees 12 minutes, run in a Northeasterly direction for a distance of 159.51 feet to a point; thence with an interior angle of 235 degrees 00 minutes, run in a Northwesterly direction for a distance of 121.75 feet to a point; thence with an interior angle of 230 degrees 12 minutes, run in a Westerly direction for a distance of 121.75 feet to a point; thence with an interior angle of 295 degrees 46 minutes run in Southeasterly direction for a distance of 97.99 feet to a point; thence with an interior angle of 77 degrees 24 minutes, run in a Southwesterly direction for a distance of 100.10 feet to a point; thence with an interior angle of 75 degrees 29 minutes, run in a Northerly direction for a distance of 98.84 feet to a point; thence with an interior angle of 206 degrees 50 minutes, run in a Northwesterly direction for a distance of 121.64 feet to a point; thence with an interior angle of 215 degrees 11 minutes, run in a Northwesterly direction for a distance of 137.77 feet to a point; thence with an interior angle of 228 degrees 55 minutes, run in a Southwesterly direction for a distance of 69.15 feet to a point; thence with an interior angle of 264 degrees 38 minutes, run in a Southeasterly direction for a distance of 122.44 feet to a point; thence with an interior angle of 26 degrees 55 minutes, run in a Northwesterly direction for a distance of 143.80 feet to a point; thence with an interior angle of 203 degrees 29 minutes, run in a Northwesterly direction for a distance of 139.28 feet to a point; thence with an interior angle of 184 degrees 43 minutes, run in a Northwesterly direction for a distance of 87.51 feet to a point; thence with an interior angle of 144 degrees 57 minutes, run in a Northwesterly direction for a distance of 120.71 feet to a point; thence with an interior angle of 156 degrees 32 minutes run in a Northerly direction for a distance of 170.59 feet to a point; thence with an interior angle of 258 degrees 03 minutes, run in a Northwesterly direction for a distance of 146.86 feet to a point; thence with an interior angle of 90 degrees 29 minutes, run in a Northeasterly direction for a distance of 101.43 feet to a point; thence with an interior angle of 172 degrees 15 minutes run in a Northeasterly direction for a distance of 125.97 feet to a point; thence with an interior angle of 128 degrees 10 minutes, run in a Northeasterly direction for a distance of 118.67 feet to a point; thence with an interior angle of 257 degrees 01 minutes, run in a Northwesterly direction for a distance of 76.12 feet to a point; thence with an interior angle of 241 degrees 47 minutes, run in a Northwesterly direction for a distance of 117.44 feet to a point; thence with an interior angle of 146 degrees 09 minutes, run in a Northwesterly direction for a distance of 78.35 feet to a point; thence with an interior angle of 75 degrees 24 minutes, run in a Northeasterly direction for a distance of 122.46 feet to a point; thence with an interior angle of 147 degrees 09 minutes, run in a Northeasterly direction for a distance of 249.90 feet to a point; thence with an interior angle of 252 degrees 32 minutes, run in a Northerly direction for a distance of 116.72 feet to a point; thence with an interior angle of 187 degrees 27 minutes, run in a Northwesterly direction for a distance of 215.03 feet to a point, said point being 30.20 feet East of Carthage Branch, the true property line; thence with an interior angle of 180 degrees 00 minutes run in a Northwesterly direction for a distance of 24.04 feet to the waters edge of the Black Warrior River; thence with an interior angle of 116 degrees 01 minutes to the chord, run in a Northeasterly direction along the waters edge of said Black Warrior River for a chord distance of 1,373.04 feet to a point, said point being the East boundary of the Southeast Quarter of the Northeast Quarter of said Section 36; thence with an interior angle of 58 degrees 01 minutes from the chord, run in a Southerly direction along the East boundary of said Southeast Quarter of Northeast Quarter for a distance of 756.24 feet to the POINT OF BEGINNING of the parcel herein described. Said parcel containing 53.20 acres, more or less

2003 18765
Recorded in the Above
DEED Book & Page
10-03-2003 10:15:59 AM

PARCEL NO. 2

A parcel of land located in the Northwest Quarter of the Southwest Quarter of Section 31, Township 24 North, Range 5 East in Tuscaloosa County, Alabama and being more particularly described as follows:

As a starting point, start at the Northwest corner of the Northwest Quarter of Southwest Quarter of said Section 31; thence run in a Southerly direction along the West boundary of said Northwest Quarter of Southwest Quarter for a distance of 800.19 feet to the POINT OF BEGINNING of the parcel herein described; thence continue on same course for a distance of 20.63 feet to a point, said point being on a curve having a delta of 38 degrees 01 minutes, and radius of 513.44 feet; thence with an interior angle of 105 degrees 02 minutes to the chord, run in an Easterly to a Southeasterly direction along said curve for a chord distance of 334.51 feet (arc distance 340.72 feet) to a point; thence with an interior angle of 121 degrees 20 minutes from the chord, run in a Northeasterly direction for a distance of 212.90 feet to a point; thence with an interior angle of 196 degrees 17 minutes run in a Northeasterly direction for a distance of 195.75 feet to a point; thence with an interior angle of 198 degrees 28 minutes run in a Northeasterly direction for a distance of 84.76 feet to a point; thence with an interior angle of 190 degrees 04 minutes, run in a Northeasterly direction for a distance of 103.28 feet to a point; thence with an interior angle of 0 degrees 07 minutes run in a Westerly direction for a distance of 573.21 feet to the point of beginning of the parcel herein described, at which point the interior angle is 90 degrees 42 minutes. Said parcel containing 0.67 acres, more or less.

2003 18766
Recorded in the Above
DEED Book & Page
10-03-2003 10:15:59 AM
Book/Pg: 2003/18762
Term/Cashier: SCAN1 / PatsyV
Tran: 4452.340684.388287
Recorded: 10-03-2003 10:16:56

DFE Deed Tax	120.00
PJF Probate Judge Fee	2.00
REC Recording Fee	48.50
SOT Source of Title	1.00
Total Fees: $ 171.50	

PARCEL NO. 3

A parcel of land located in the Northwest Quarter of the Southwest Quarter of Section 31, Township 24 North, Range 5 East in Tuscaloosa County, Alabama and being more particularly described as follows:

As a starting point, start at the Northwest corner of the Northwest Quarter of the Southwest Quarter of said Section 31; thence run in a Southerly direction along the West boundary of said Northwest Quarter of Southwest Quarter for a distance of 850.82 feet to the POINT OF BEGINNING of the parcel herein described; thence continue on same course for a distance of 204.72 feet to a point; thence with an interior angle of 80 degrees 24 minutes, run in a Northeasterly direction for a distance of 118.93 feet to a point; thence with an interior angle of 167 degrees 25 minutes, run in a Northeasterly direction for a distance of 123.09 feet to a point; thence with an interior angle of 166 degrees 54 minutes run in a Northeasterly direction for a distance of 77.64 feet to a point, said point being on a curve having a delta of 37 degrees 18 minutes, and a radius of 483.44 feet; thence with an interior angle of 52 degrees 54 minutes to the chord run in a Northwesterly to a Westerly direction along said curve for a chord distance of 309.18 feet (arc distance of 314.70 feet) to the POINT OF BEGINNING of the parcel herein described, at which point the interior angle is 72 degrees 23 minutes from the chord. Said parcel containing 0.91 acres, more or less.

PARCEL NO. 4

A parcel of land located in the Northwest Quarter of the Southwest Quarter of Section 31, Township 24 North, Range 5 East in Tuscaloosa County, Alabama, and being more particularly described as follows:

As a Starting Point start at the Northwest corner of the Northwest Quarter of the Southwest Quarter of said Section 31; thence run in a Southerly direction along the West boundary of said Section 31 for a distance of 441.58 feet to the POINT OF BEGINNING of the parcel herein described; thence continue in a Southerly direction along said course for a distance of 28.00 feet to a point on an existing chain link fence; thence with an interior angle of 91 degrees 16 minutes run in an Easterly direction for a distance of 1.00 feet to a point; thence with an interior angle of 90 degrees 00 minutes run in a Northerly direction for a distance of 26.67 feet to a point; thence with an interior angle of 129 degrees 18 minutes run in a Northwesterly direction for a distance of 2.10 feet to the POINT OF BEGINNING of the parcel herein described, at which point the interior angle is 49 degrees 26 minutes. Said parcel containing 0.0008 acres or 35.6 sq. ft..

PARCEL NO. 5

A parcel of land located in the Northwest Quarter of the Southwest Quarter of Section 31, Township 24 North, Range 5 East in Tuscaloosa County, Alabama, and being more particularly described as follows:

As a Starting Point start at the Northwest corner of the Northwest Quarter of the Southwest Quarter of said Section 31; thence run in a Southerly direction along the West boundary of said Section 31 for a distance of 759.13 feet to the POINT OF BEGINNING of the parcel herein described; thence continue in a Southerly direction along said course for a distance of 41.07 feet to a point; thence with an interior angle of 89 degrees 18 minutes run in an Easterly direction for a distance of 34.07 feet to a point; thence with an interior angle of 99 degrees 55 minutes run in a Northeasterly direction for a distance of 22.37 feet to a point; thence with an interior angle of 107 degrees 02 minutes run in a Northwesterly direction for a distance of 41.98 feet to the POINT OF BEGINNING of the parcel herein described, at which point the interior angle is 63 degrees 45 minutes. Said parcel containing 0.03 acres or 1,148.6 sq. ft..

2003 18767
Recorded in the Above
DEED Book & Page
10-03-2003 10:15:59 AM

EXHIBIT " B "

LEGAL DESCRIPTION
LAWTER CHEMICAL
RESTRICTED USE AREA
OWNER: EASTMAN RESINS, INC.
SOURCE OF TITLE: DEED BOOK 2003, PAGE 16320

Area A

A parcel of land located in the Northeast Quarter of the Southeast Quarter of Section 36, Township 24 North, Range 4 East in Tuscaloosa County, Alabama and being more particularly described as follows:

As a starting point, start at the Northeast corner of the Northeast Quarter of the Southeast Quarter of said Section 36; thence run in a Southerly direction along the East boundary of the Northeast Quarter of the Southeast Quarter of said Section 36 for a distance of 702.77 feet to a point; thence with a deflection angle of 92 degrees 07 minutes to the right, run in a Westerly direction for a distance of 727.22 feet to the POINT OF BEGINNING of the parcel herein described; thence continue in a Westerly direction for a distance of 62.34 feet to a point; thence with an interior angle of 117 degrees 17 minutes, run in a Northwesterly direction for a distance of 67.93 feet to a point; thence with an interior angle of 142 degrees 58 minutes, run in a Northeasterly direction for a distance of 59.16 feet to a point; thence with an interior angle of 137 degrees 02 minutes, run in a Northeasterly direction for a distance of 49.18 feet to a point; thence with an interior angle of 109 degrees 23 minutes, run in a Southeasterly direction for a distance of 48.20 feet to a point; thence with an interior angle of 125 degrees 19 minutes, run in a Southerly direction for a distance of 70.87 feet to a point; thence with an interior angle of 179 degrees 49 minutes, run in a Southerly direction for a distance of 51.18 feet to the POINT OF BEGINNING of the parcel herein described at which point the interior angle is 88 degrees 12 minutes. Said parcel containing 0.25 acres.

2003 18768
Recorded in the Above
DEED Book & Page
10-03-2003 10:15:59 AM

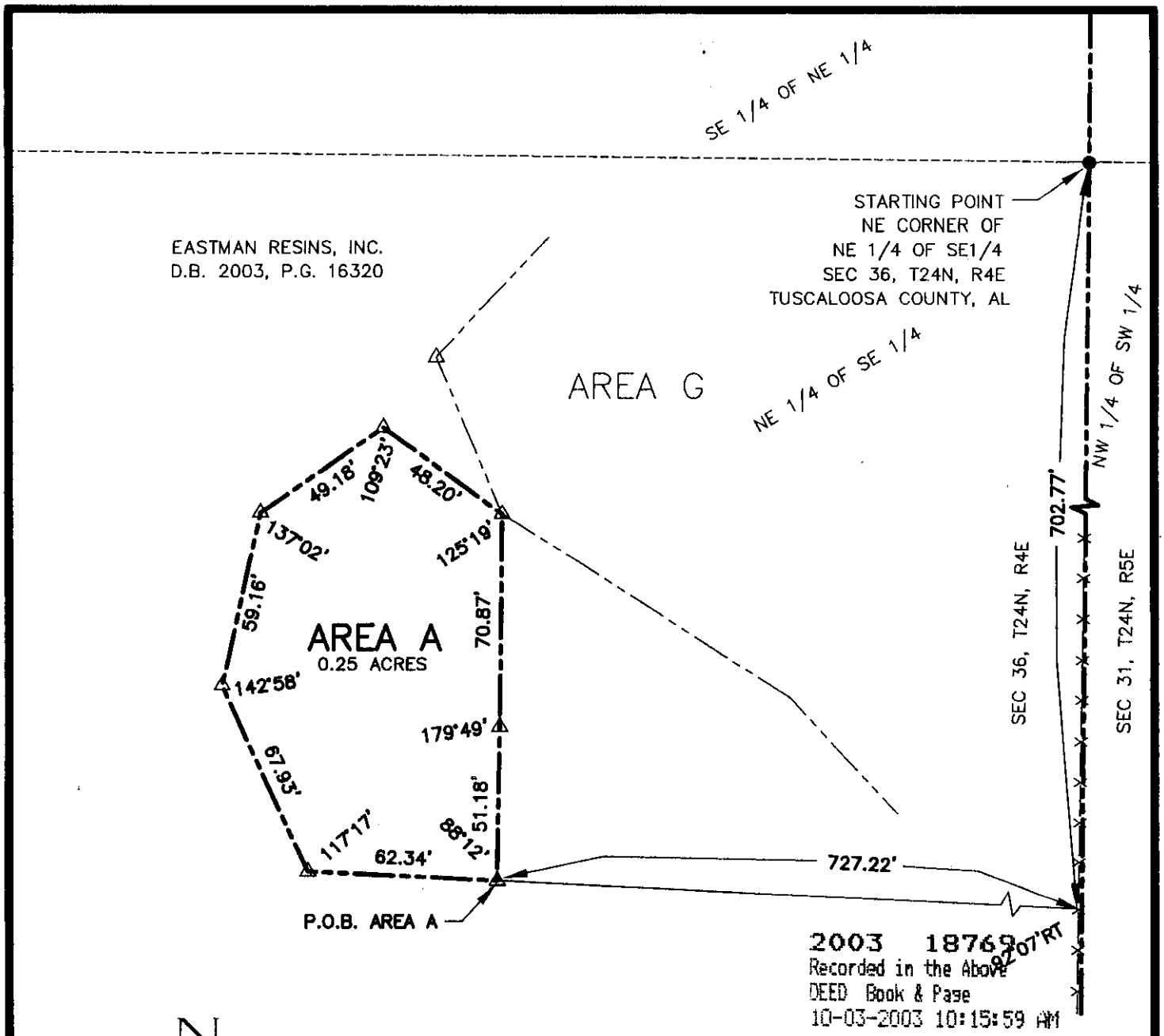

N

GRAPHIC SCALE 1" = 50'

0' 50' 100'

LEGEND

- ● IRON PIN FOUND
- △ CAPPED REBAR PLACED
- BOUNDARY LINE
- —X—X—X— FENCE

TO WHOM IT MAY CONCERN:

I, Gary Neal Faulkner, a Registered Land Surveyor in the State of Alabama of the firm of McGiffert and Associates, LLC, Tuscaloosa, Alabama, hereby certify that the premises shown and described hereon is a true and correct plat of said property, and that all parts of this survey and drawing have been completed in accordance with the current requirements of the Standards of Practice for Surveying in the State of Alabama to the best of my knowledge, information, and belief.

Witness my hand this the 24th day of September, 2003.

Gary Neal Faulkner
Registered Land Surveyor
Ala. Reg. No. 18388

ALABAMA PROFESSIONAL REGISTERED No. 18388 LAND SURVEYOR GARY NEAL FAULKNER

OWNER: EASTMAN RESINS, INC.
SOURCE OF TITLE: D.B. 2003, P.G. 16320

EXHIBIT " B " CONT.

LEGAL DESCRIPTION
LAWTER CHEMICAL
RESTRICTED USE AREA
OWNER: EASTMAN RESINS, INC.
SOURCE OF TITLE: DEED BOOK 2003, PAGE 16320

Area B

A parcel of land located in the Northeast Quarter of the Southeast Quarter of Section 36, Township 24 North, Range 4 East in Tuscaloosa County, Alabama and being more particularly described as follows:

As a starting point, start at the Northeast corner of the Northeast Quarter of the Southeast Quarter of said Section 36; thence run in a Southerly direction along the East boundary of the Northeast Quarter of the Southeast Quarter of said Section 36 for a distance of 404.84 feet to a point; thence with a deflection angle of 89 degrees 40 minutes to the right, run in a Westerly direction for a distance of 45.17 feet to the POINT OF BEGINNING of the parcel herein described; thence continue in a Westerly direction for a distance of 88.39 feet to a point; thence with an interior angle of 89 degrees 35 minutes, run in a Northerly direction for a distance of 19.94 feet to a point; thence with an interior angle of 163 degrees 38 minutes, run in a Northeasterly direction for a distance of 27.39 feet to a point; thence with an interior angle of 196 degrees 02 minutes, run in a Northerly direction for a distance of 50.55 feet to a point; thence with an interior angle of 89 degrees 31 minutes, run in an Easterly direction for a distance of 57.90 feet to a point; thence with an interior angle of 274 degrees 36 minutes, run in a Northerly direction for a distance of 14.52 feet to a point; thence with an interior angle of 86 degrees 20 minutes, run in an Easterly direction for a distance of 25.61 feet to a point; thence with an interior angle of 88 degrees 47 minutes, run in a Southerly direction for a distance of 111.11 feet to the POINT OF BEGINNING of the parcel herein described at which point the interior angle is 90 degrees 43 minutes. Said parcel containing 0.20 acres.

2003 18770
Recorded in the Above
DEED Book & Page
10-03-2003 10:15:59 AM

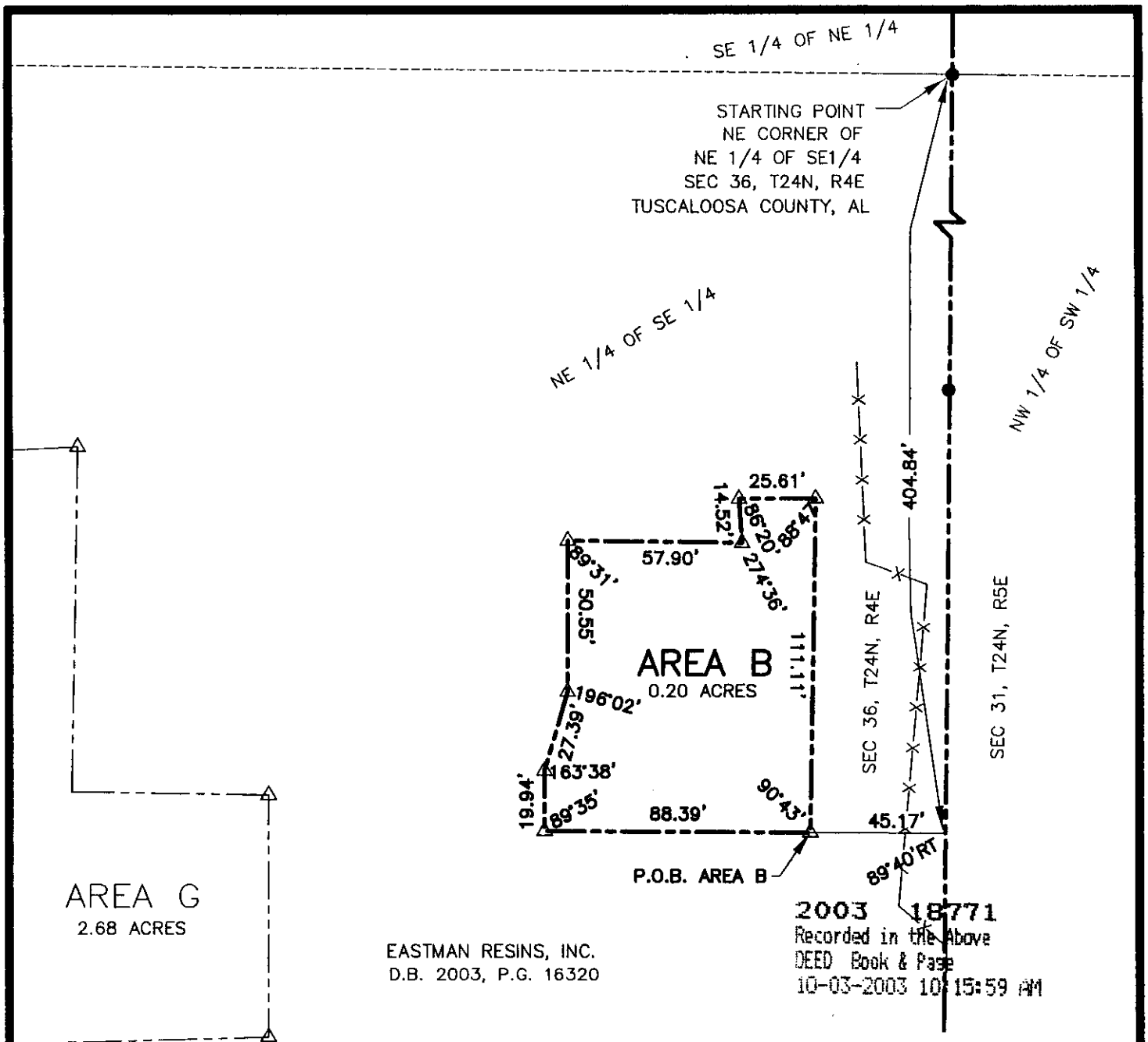

EASTMAN RESINS, INC.
D.B. 2003, P.G. 16320

2003 18771
Recorded in the Above
DEED Book & Page
10-03-2003 10:15:59 AM

TO WHOM IT MAY CONCERN:

I, Gary Neal Faulkner, a Registered Land Surveyor in the State of Alabama of the firm of McGiffert and Associates, LLC, Tuscaloosa, Alabama, hereby certify that the premises shown and described hereon is a true and correct plat of said property, and that all parts of this survey and drawing have been completed in accordance with the current requirements of the Standards of Practice for Surveying in the State of Alabama to the best of my knowledge, information, and belief.

Witness my hand this the 24th day of September, 2003.

Gary Neal Faulkner
Registered Land Surveyor
Ala. Reg. No. 18388

ALABAMA PROFESSIONAL REGISTERED No. 18388 LAND SURVEYOR GARY NEAL FAULKNER

LEGEND

- ● IRON PIN FOUND
- △ CAPPED REBAR PLACED
- BOUNDARY LINE
- —X—X—X— FENCE

OWNER: EASTMAN RESINS, INC.
SOURCE OF TITLE: D.B. 2003, P.G. 16320

EXHIBIT " B " CONT.

LEGAL DESCRIPTION
LAWTER CHEMICAL
RESTRICTED USE AREA
OWNER: EASTMAN RESINS, INC.
SOURCE OF TITLE: DEED BOOK 2003, PAGE 16320

Area C

A parcel of land located in the Northeast Quarter of the Southeast Quarter and the Southeast Quarter of the Northeast Quarter of Section 36, Township 24 North, Range 4 East in Tuscaloosa County, Alabama and being more particularly described as follows:

As a starting point, start at the Northeast corner of the Northeast Quarter of the Southeast Quarter of said Section 36; thence run in a Northerly direction along the East boundary of the Southeast Quarter of the Northeast Quarter of said Section 36 for a distance of 71.04 feet to a point; thence with a deflection angle of 90 degrees 00 minutes to the left, run in a Westerly direction for a distance of 96.23 feet to the POINT OF BEGINNING of the parcel herein described; thence with a deflection angle of 39 degrees 44 minutes to the left, run in a Southwesterly direction for a distance of 48.18 feet to a point; thence with an interior angle of 170 degrees 17 minutes, run in a Southwesterly direction for a distance of 50.43 feet to a point; thence with an interior angle of 196 degrees 06 minutes, run in a Southwesterly direction for a distance of 109.65 feet to a point; thence with an interior angle of 93 degrees 08 minutes, run in a Southeasterly direction for a distance of 86.88 feet to a point; thence with an interior angle of 149 degrees 36 minutes, run in a Southeasterly direction for a distance of 174.18 feet to a point; thence with an interior angle of 63 degrees 53 minutes, run in a Northeasterly direction for a distance of 73.03 feet to a point; thence with an interior angle of 174 degrees 19 minutes, run in a Northwesterly direction for a distance of 65.75 feet to a point; thence with an interior angle of 176 degrees 57 minutes, run in a Northwesterly direction for a distance of 102.75 feet to a point; thence with an interior angle of 157 degrees 51 minutes, run in a Northwesterly direction for a distance of 55.36 feet to the POINT OF BEGINNING of the parcel herein described at which point the interior angle is 77 degrees 54 minutes. Said parcel containing 0.75 acres.

2003 18772
Recorded in the Above
DEED Book & Page
10-03-2003 10:15:59 AM

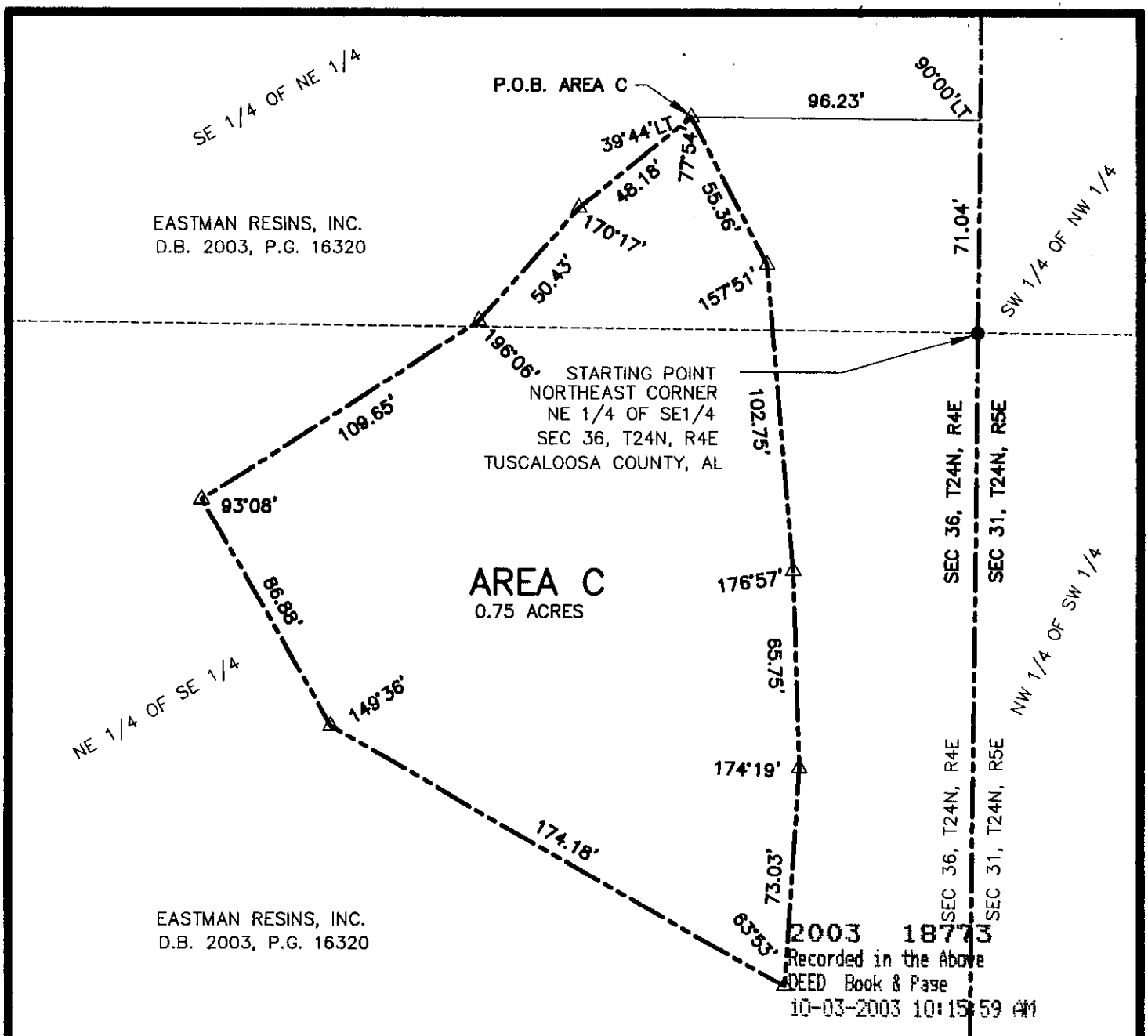

N

TO WHOM IT MAY CONCERN:

I, Gary Neal Faulkner, a Registered Land Surveyor in the State of Alabama of the firm of McGiffert and Associates, LLC, Tuscaloosa, Alabama, hereby certify that the premises shown and described hereon is a true and correct plat of said property, and that all parts of this survey and drawing have been completed in accordance with the current requirements of the Standards of Practice for Surveying in the State of Alabama to the best of my knowledge, information, and belief.

Witness my hand this the 24th day of September, 2003.

GRAPHIC SCALE 1" = 50'

0' 50' 100'

LEGEND

- ● IRON PIN FOUND
- △ CAPPED REBAR PLACED
- BOUNDARY LINE
- —X—X—X— FENCE

Gary Neal Faulkner
Registered Land Surveyor
Ala. Reg. No. 18388

ALABAMA PROFESSIONAL REGISTERED No. 18388 LAND SURVEYOR GARY NEAL FAULKNER

OWNER: EASTMAN RESINS, INC.
SOURCE OF TITLE: D.B. 2003, P.G. 16320

EXHIBIT " B " CONT.

LEGAL DESCRIPTION
LAWTER CHEMICAL
RESTRICTED USE AREA
OWNER: EASTMAN RESINS, INC.
SOURCE OF TITLE: DEED BOOK 2003, PAGE 16320

Area D

A parcel of land located in the Northeast Quarter of the Southeast Quarter of Section 36, Township 24 North, Range 4 East in Tuscaloosa County, Alabama and being more particularly described as follows:

As a starting point, start at the Northeast corner of the Northeast Quarter of the Southeast Quarter of said Section 36; thence run in a Southerly direction along the East boundary of the Northeast Quarter of the Southeast Quarter of said Section 36 for a distance of 802.95 feet to a point; thence with a deflection angle of 90 degrees 02 minutes to the right, run in a Westerly direction for a distance of 576.22 feet to the POINT OF BEGINNING of the parcel herein described; thence continue in a Westerly direction for a distance of 91.85 feet to a point; thence with an interior angle of 89 degrees 38 minutes, run in a Northerly direction for a distance of 46.09 feet to a point; thence with an interior angle of 225 degrees 26 minutes, run in a Northwesterly direction for a distance of 41.27 feet to a point; thence with an interior angle of 135 degrees 32 minutes, run in a Northerly direction for a distance of 51.35 feet to a point; thence with an interior angle of 89 degrees 11 minutes, run in an Easterly direction for a distance of 120.55 feet to a point; thence with an interior angle of 90 degrees 33 minutes, run in a Southerly direction for a distance of 126.14 feet to the POINT OF BEGINNING of the parcel herein described at which point the interior angle is 89 degrees 40 minutes. Said parcel containing 0.31 acres.

2003 18774
Recorded in the Above
DEED Book & Page
10-03-2003 10:15:59 AM

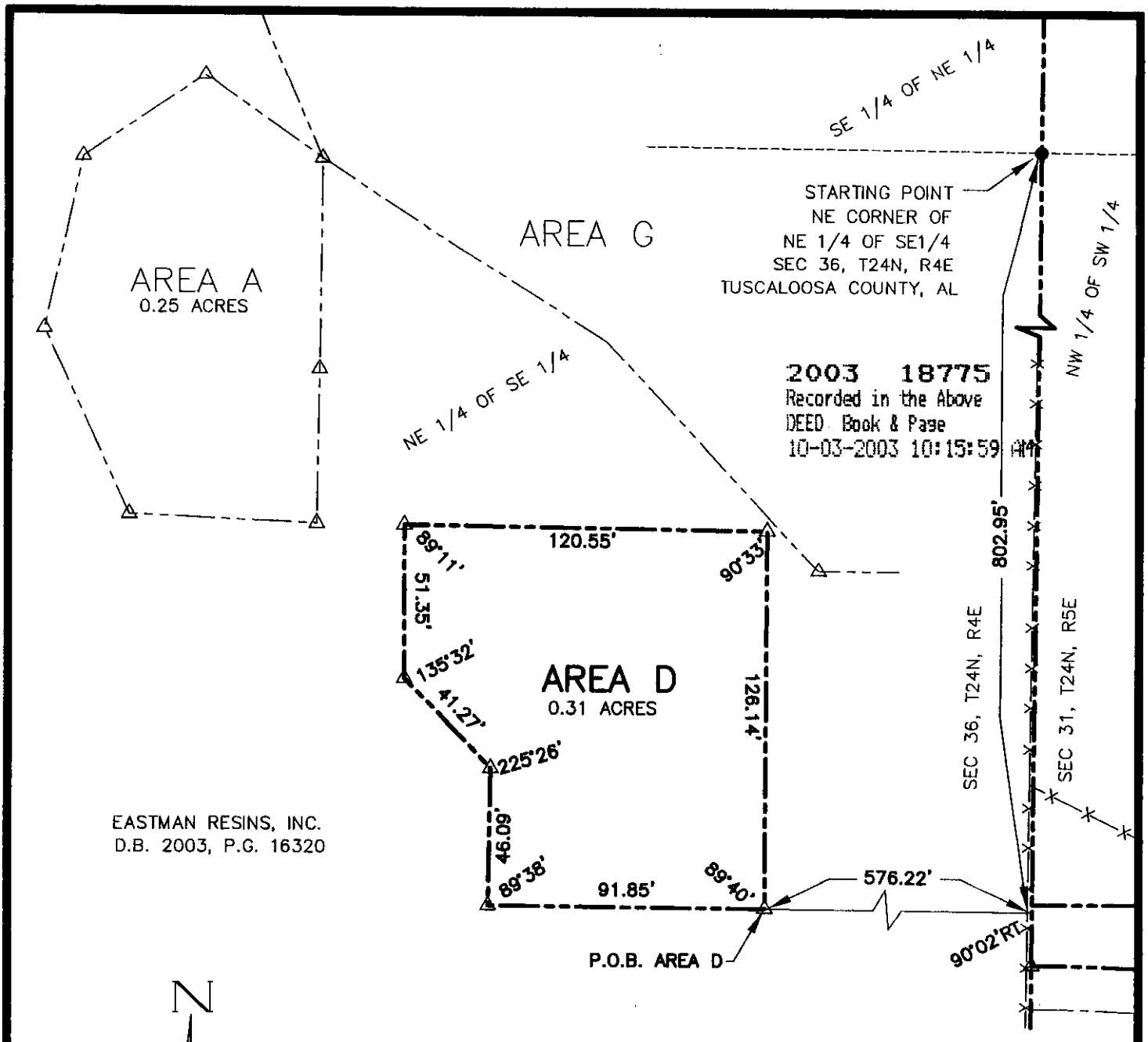

TO WHOM IT MAY CONCERN:

I, Gary Neal Faulkner, a Registered Land Surveyor in the State of Alabama of the firm of McGiffert and Associates, LLC, Tuscaloosa, Alabama, hereby certify that the premises shown and described hereon is a true and correct plat of said property, and that all parts of this survey and drawing have been completed in accordance with the current requirements of the Standards of Practice for Surveying in the State of Alabama to the best of my knowledge, information, and belief.

Witness my hand this the 24th day of September, 2003.

Gary Neal Faulkner
Registered Land Surveyor
Ala. Reg. No. 18388

ALABAMA PROFESSIONAL REGISTERED No. 18388 LAND SURVEYOR GARY NEAL FAULKNER

LEGEND

- ● IRON PIN FOUND
- △ CAPPED REBAR PLACED
- BOUNDARY LINE
- —X—X—X— FENCE

OWNER: EASTMAN RESINS, INC.
SOURCE OF TITLE: D.B. 2003, P.G. 16320

EXHIBIT " B " CONT.

LEGAL DESCRIPTION
LAWTER CHEMICAL
RESTRICTED USE AREA
OWNER: EASTMAN RESINS, INC.
SOURCE OF TITLE: DEED BOOK 2003, PAGE 16320

Area E

A parcel of land located in the Northeast Quarter of the Southeast Quarter of Section 36, Township 24 North, Range 4 East in Tuscaloosa County, Alabama and being more particularly described as follows:

As a starting point, start at the Northeast corner of the Northeast Quarter of the Southeast Quarter of said Section 36; thence run in a Southerly direction along the East boundary of the Northeast Quarter of the Southeast Quarter of said Section 36 for a distance of 1080.56 feet to a point; thence with a deflection angle of 87 degrees 22 minutes to the right, run in a Southwesterly direction for a distance of 705.91 feet to the POINT OF BEGINNING of the parcel herein described; thence continue in a Southwesterly direction for a distance of 83.24 feet to a point; thence with an interior angle of 171 degrees 50 minutes, run in a Southwesterly direction for a distance of 87.66 feet to a point; thence with an interior angle of 58 degrees 29 minutes, run in a Southeasterly direction for a distance of 37.35 feet to a point; thence with an interior angle of 211 degrees 36 minutes, run in a Southeasterly direction for a distance of 55.43 feet to a point; thence with an interior angle of 96 degrees 57 minutes, run in an Northeasterly direction for a distance of 90.83 feet to a point; thence with an interior angle of 125 degrees 34 minutes, run in a Northeasterly direction for a distance of 84.71 feet to a point; thence with an interior angle of 144 degrees 47 minutes, run in an Northerly direction for a distance of 24.42 feet to the POINT OF BEGINNING of the parcel herein described at which point the interior angle is 90 degrees 47 minutes. Said parcel containing 0.28 acres.

2003 18776
Recorded in the Above
DEED Book & Page
10-03-2003 10:15:59 AM

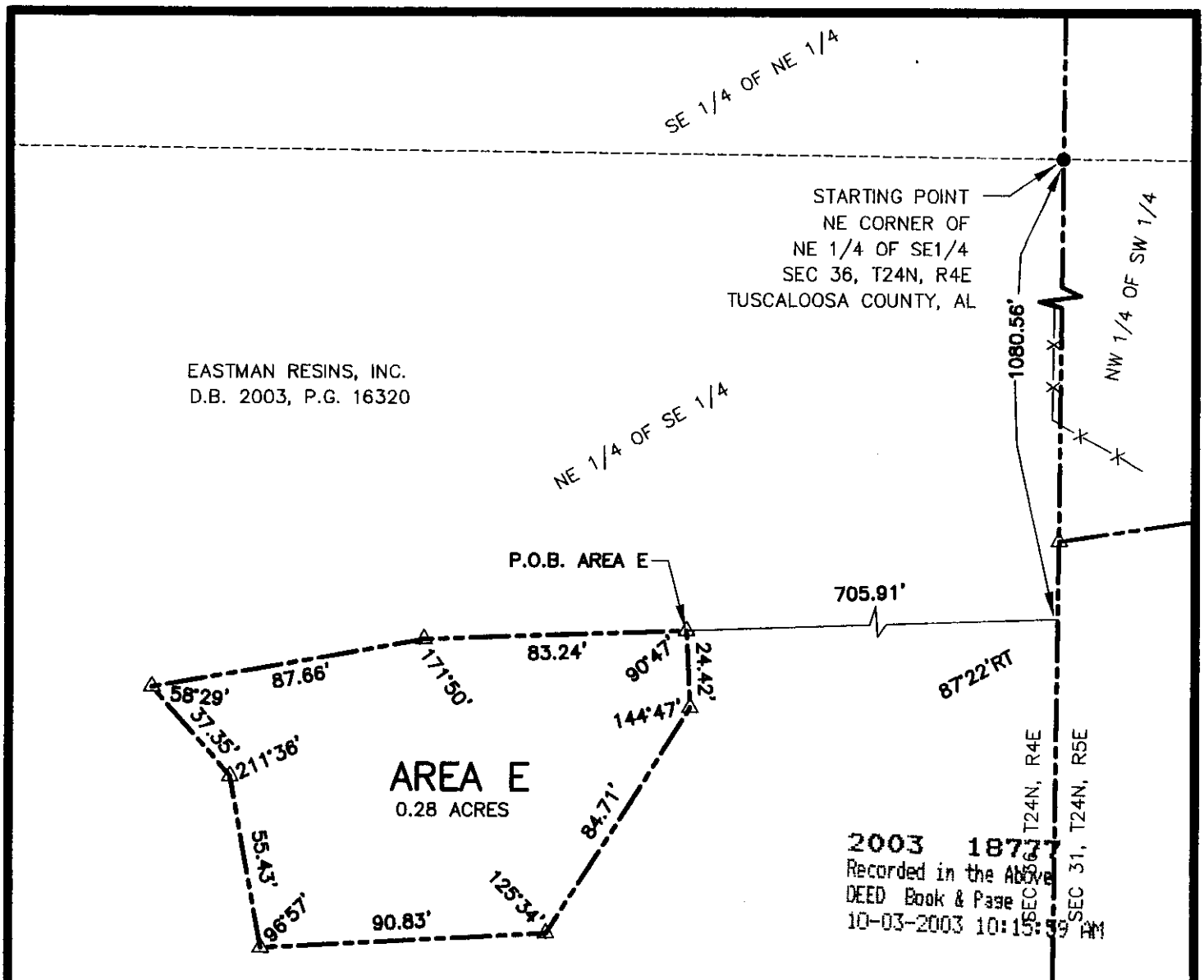

N

TO WHOM IT MAY CONCERN:

I, Gary Neal Faulkner, a Registered Land Surveyor in the State of Alabama of the firm of McGiffert and Associates, LLC, Tuscaloosa, Alabama, hereby certify that the premises shown and described hereon is a true and correct plat of said property, and that all parts of this survey and drawing have been completed in accordance with the current requirements of the Standards of Practice for Surveying in the State of Alabama to the best of my knowledge, information, and belief.

Witness my hand this the 24th day of September, 2003.

GRAPHIC SCALE 1" = 50'

0' 50' 100'

Gary Neal Faulkner
Registered Land Surveyor
Ala. Reg. No. 18388

ALABAMA PROFESSIONAL REGISTERED No. 18388 LAND SURVEYOR GARY NEAL FAULKNER

LEGEND

● IRON PIN FOUND

△ CAPPED REBAR PLACED

BOUNDARY LINE

—X—X—X— FENCE

OWNER: EASTMAN RESINC, INC.
SOURCE OF TITLE: D.B. 2003, P.G. 16320

EXHIBIT " B " CONT.

LEGAL DESCRIPTION
LAWTER CHEMICAL
RESTRICTED USE AREA
OWNER: EASTMAN RESINS, INC.
SOURCE OF TITLE: DEED BOOK 2003, PAGE 16320

Area F

A parcel of land located in the Northeast Quarter of the Southeast Quarter of Section 36, Township 24 North, Range 4 East in Tuscaloosa County, Alabama and being more particularly described as follows:

As a starting point, start at the Northeast corner of the Northeast Quarter of the Southeast Quarter of said Section 36; thence run in a Southerly direction along the East boundary of the Northeast Quarter of the Southeast Quarter of said Section 36 for a distance of 1100.20 feet to a point; thence with a deflection angle of 86 degrees 31 minutes to the right, run in a Southwesterly direction for a distance of 229.02 feet to the POINT OF BEGINNING of the parcel herein described; thence continue in a Southwesterly direction for a distance of 127.16 feet to a point; thence with an interior angle of 85 degrees 14 minutes, run in a Southeasterly direction for a distance of 78.49 feet to a point; thence with an interior angle of 93 degrees 51 minutes, run in a Northeasterly direction for a distance of 135.15 feet to a point; thence with an interior angle of 80 degrees 07 minutes, run in a Northwesterly direction for a distance of 77.42 feet to the POINT OF BEGINNING of the parcel herein described at which point the interior angle is 100 degrees 48 minutes. Said parcel containing 0.23 acres.

2003 18778
Recorded in the Above
DEED Book & Page
10-03-2003 10:15:59 AM

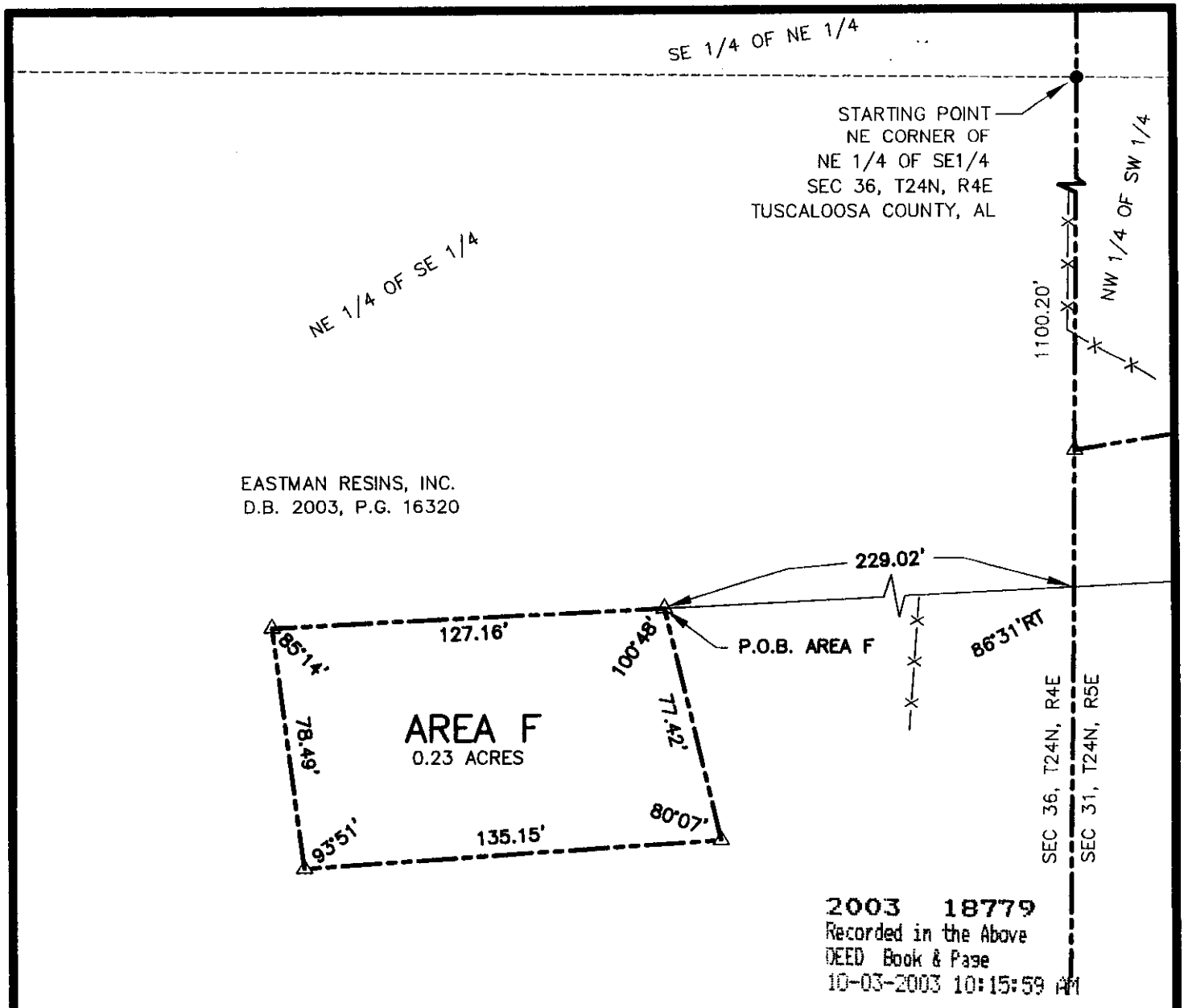

N

TO WHOM IT MAY CONCERN:

I, Gary Neal Faulkner, a Registered Land Surveyor in the State of Alabama of the firm of McGiffert and Associates, LLC, Tuscaloosa, Alabama, hereby certify that the premises shown and described hereon is a true and correct plat of said property, and that all parts of this survey and drawing have been completed in accordance with the current requirements of the Standards of Practice for Surveying in the State of Alabama to the best of my knowledge, information, and belief.

Witness my hand this the 24th day of September, 2003.

GRAPHIC SCALE 1" = 50'

0' 50' 100'

Gary Neal Faulkner
Registered Land Surveyor
Ala. Reg. No. 18388

ALABAMA PROFESSIONAL REGISTERED No. 18388 LAND SURVEYOR GARY NEAL FAULKNER

LEGEND

● IRON PIN FOUND

△ CAPPED REBAR PLACED

BOUNDARY LINE

—X—X—X— FENCE

OWNER: EASTMAN RESINS, INC.
SOURCE OF TITLE: D.B. 2003, P.G. 16320

EXHIBIT " B " CONT.

2003 18780
Recorded in the Above
DEED Book & Page
10-03-2003 10:15:59 AM
Source Of Title: 2003 / 18760
W. Hardy McCollum - Probate Judge
Tuscaloosa County, Alabama

LEGAL DESCRIPTION
LAWTER CHEMICAL
RESTRICTED USE AREA
OWNER: EASTMAN RESINS, INC.
SOURCE OF TITLE: DEED BOOK 2003, PAGE 16320

Area G

A parcel of land located in the Northeast Quarter of the Southeast Quarter of Section 36, Township 24 North, Range 4 East in Tuscaloosa County, Alabama and being more particularly described as follows:

As a starting point, start at the Northeast corner of the Northeast Quarter of the Southeast Quarter of said Section 36; thence run in a Southerly direction along the East boundary of the Northeast Quarter of the Southeast Quarter of said Section 36 for a distance of 467.95 feet to a point; thence with a deflection angle of 87 degrees 49 minutes to the right, run in a Westerly direction for a distance of 225.00 feet to the POINT OF BEGINNING of the parcel herein described; thence continue in a Westerly direction for a distance of 139.54 feet to a point; thence with an interior angle of 199 degrees 42 minutes run in a Southwesterly direction for a distance of 79.21 feet to a point; thence with an interior angle of 232 degrees 08 minutes, run in a Southwesterly direction for a distance of 134.70 feet to a point; thence with an interior angle of 195 degrees 04 minutes, run in a Southerly direction for a distance of 25.03 feet to a point; thence with an interior angle of 135 degrees 45 minutes, run in a Southwesterly direction for a distance of 33.60 feet to a point; thence with an interior angle of 135 degrees 28 minutes, run in a Westerly direction for a distance of 60.55 feet to a point; thence with an interior angle of 133 degrees 04 minutes, run in a Northwesterly direction for a distance of 103.98 feet to a point; thence with an interior angle of 194 degrees 16 minutes, run in a Northwesterly direction for a distance of 112.79 feet to a point; thence with an interior angle of 145 degrees 49 minutes run in a Northwesterly direction for a distance of 55.48 feet to a point; thence with an interior angle of 114 degrees 20 minutes run in a Northeasterly direction for a distance of 156.74 feet to a point; thence with an interior angle of 168 degrees 16 minutes run in a Northeasterly direction for a distance of 64.80 feet to a point; thence with an interior angle of 208 degrees 49 minutes run in a Northeasterly direction for a distance of 37.22 feet to a point; thence with an interior angle of 133 degrees 25 minutes run in a Northeasterly direction for a distance of 71.46 feet to a point; thence with an interior angle of 165 degrees 17 minutes run in an Northeasterly direction for a distance of 217.39 feet to a point; thence with an interior angle of 86 degrees 00 minutes run in a Southerly direction for a distance of 115.24 feet to a point; thence with an interior angle of 270 degrees 10 minutes run in an Easterly direction for a distance of 65.25 feet to a point; thence with an interior angle of 90 degrees 48 minutes run in a Southerly direction for a distance of 81.80 feet to the POINT OF BEGINNING of the parcel herein described at which point the interior angle is 91 degrees 39 minutes. Said parcel containing 2.68 acres.

Book/Pg: 2003/18762
Term/Cashier: SCAN1 / PatsyV
Tran: 4452.340684.388287
Recorded: 10-03-2003 10:18:15

DFE Deed Tax	120.00
PJF Probate Judge Fee	2.00
REC Recording Fee	48.50
SOT Source of Title	1.00
Total Fees: $ 171.50	

OWNER: EASTMAN RESINS, INC.
SOURCE OF TITLE: D.B. 2003, P.G. 16320

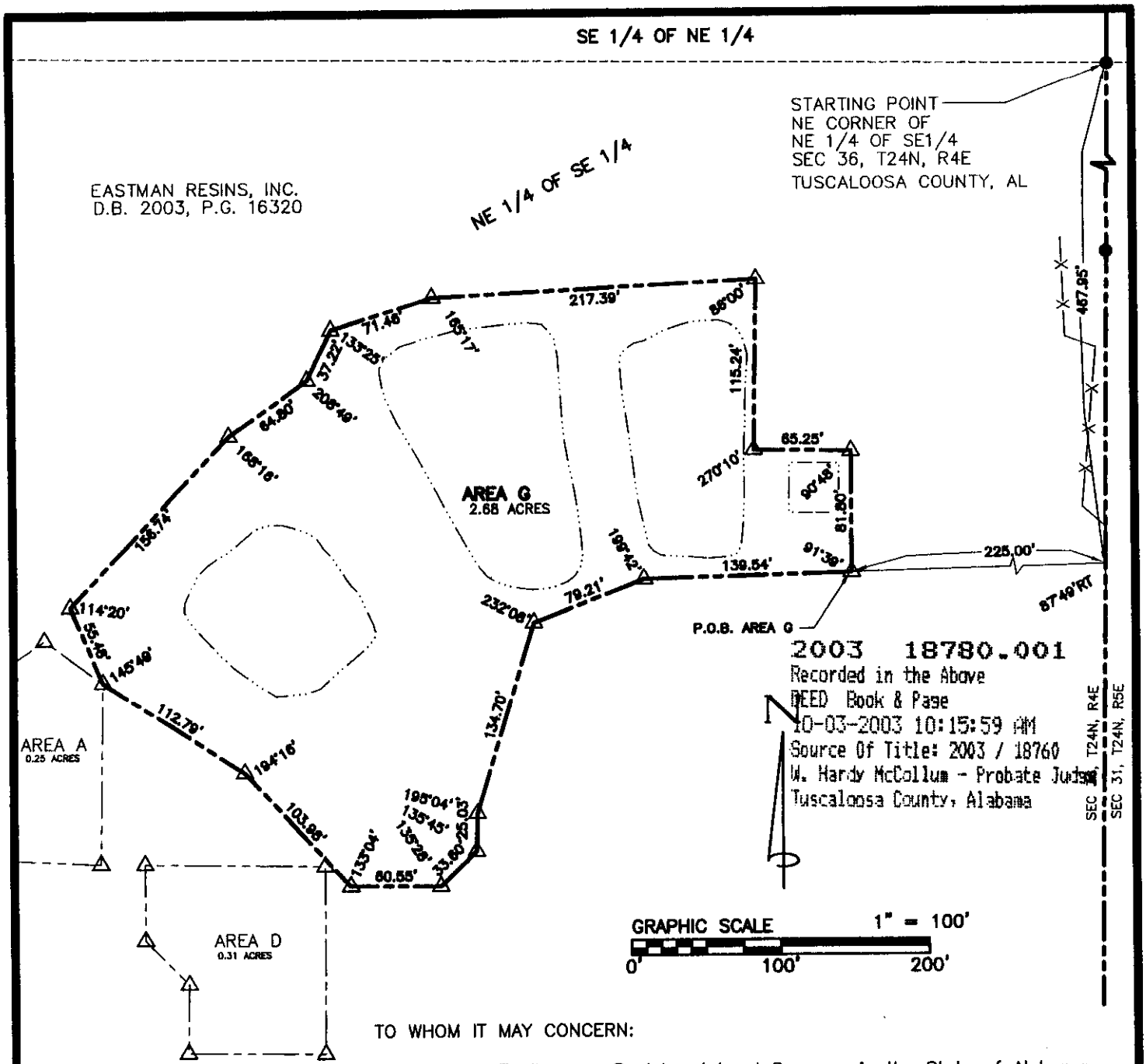

2003 18780.001
Recorded in the Above
DEED Book & Page
10-03-2003 10:15:59 AM
Source Of Title: 2003 / 18760
W. Hardy McCollum - Probate Judge
Tuscaloosa County, Alabama

TO WHOM IT MAY CONCERN:

I, Gary Neal Faulkner, a Registered Land Surveyor in the State of Alabama of the firm of McGiffert and Associates, LLC, Tuscaloosa, Alabama, hereby certify that the premises shown and described hereon is a true and correct plat of said property, and that all parts of this survey and drawing have been completed in accordance with the current requirements of the Standards of Practice for Surveying in the State of Alabama to the best of my knowledge, information, and belief.

Witness my hand this the 24th day of September, 2003.

ALABAMA PROFESSIONAL REGISTERED No. 18388 LAND SURVEYOR GARY NEAL FAULKNER

Gary Neal Faulkner
Registered Land Surveyor
Ala. Reg. No. 18388

LEGEND

- ● IRON PIN FOUND
- △ CAPPED REBAR PLACED
- BOUNDARY LINE
- FENCE
- DRAIN

OWNER: EASTMAN RESINS, INC.
SOURCE OF TITLE: D.B. 2003, P.G. 16320