**LANCE R. LEFLEUR**
DIRECTOR

**KAY IVEY**
GOVERNOR

**Alabama Department of Environmental Management**
**adem.alabama.gov**
1400 Coliseum Blvd. 36110-2400 ▪ Post Office Box 301463
Montgomery, Alabama 36130-1463
(334) 271-7700 ▪ FAX (334) 271-7950

May 18,2020

Scott Brasfield
Supt. Facilities & EHS
PGP Operating, LLC
17300 Brookwood Parkway
Vance, AL 35490

RE: Draft Permit
Maxwell Crossing
NPDES Permit No. AL0056791
Tuscaloosa County (125)

Dear Mr. Brasfield:

Transmitted herein is a draft of the above referenced permit. Please review the enclosed draft permit carefully. If previously permitted, the draft may contain additions/revisions to the language in your current permit. Please submit any comments on the draft permit to the Department within 30 days from the date of receipt of this letter.

Since the Department has made a tentative decision to reissue the above referenced permit, ADEM Admin. Code r. 335-6-6-.21 requires a public notice of the draft permit followed by a period of at least 30 days for public comment before the permit can be issued. The United States Environmental Protection Agency will also receive the draft permit for review during the 30-day public comment period.

The Department utilizes a web-based electronic environmental (E2) reporting system for electronic DMR submittal. Please read Part I.D of the permit carefully and visit https://e2.adem.alabama.gov/npdes.

Should you have any questions concerning this matter, please contact Jasmine White by email at jasmine.white@adem.alabama.gov or by phone at (334) 270-5622.

Sincerely,

Catherine A. McNeill, Chief
Mining and Natural Resource Section
Stormwater Management Branch
Water Division

CAM/jlw File: DPER/4399

Enclosure

cc: Jasmine White, ADEM
Environmental Protection Agency Region IV
Alabama Department of Conservation and Natural Resources
U.S. Fish and Wildlife Service
Alabama Historical Commission
Advisory Council on Historic Preservation

**Birmingham Branch**
110 Vulcan Road
Birmingham, AL 35209-4702
(205) 942-6168
(205) 941-1603 (FAX)

**Decatur Branch**
2715 Sandlin Road, S.W.
Decatur, AL 35603-1333
(256) 353-1713
(256) 340-9359 (FAX)

**Mobile Branch**
2204 Perimeter Road
Mobile, AL 36615-1131
(251) 450-3400
(251) 479-2593 (FAX)

**Mobile-Coastal**
3664 Dauphin Street, Suite B
Mobile, AL 36608
(251) 304-1176
(251) 304-1189 (FAX)

ADEM
Alabama Department of Environmental Management

# NATIONAL POLLUTANT DISCHARGE ELIMINATION SYSTEM INDIVIDUAL PERMIT

| | |
|---|---|
| PERMITTEE: | PGP Operating, LLC<br>17300 Brookwood Parkway<br>Vance, AL 35490 |
| FACILITY LOCATION: | Maxwell Crossing<br>Maxwell Loop Road<br>Tuscaloosa, AL 35405<br>Tuscaloosa County<br>T21S, R8W, Sections 19-21, 28-36<br>T21S, R9W, Sections 25, 35, & 36<br>T22S, R8W, Sections 1-12, 4-23, & 27-30<br>T22S, R9W, Sections 1, 2, 10-16, 22-27, 35, & 36<br>T24N, R5E, Sections 1-4 & 12<br>T24N, R6E, Sections 1-16 & 22-24<br>T24N, R7E, Sections 5-7 & 18 |
| PERMIT NUMBER: | AL0056791 |
| DSN & RECEIVING STREAM: | 001-1 Black Warrior River |

*In accordance with and subject to the provisions of the Federal Water Pollution Control Act, as amended, 33 U.S.C. §§1251-1388 (the "FWPCA"), the Alabama Water Pollution Control Act, as amended, Code of Alabama 1975, §§ 22-22-1 to 22-22-14 (the "AWPCA"), the Alabama Environmental Management Act, as amended, Code of Alabama 1975, §§22-22A-1 to 22-22A-17, and rules and regulations adopted thereunder, and subject further to the terms and conditions set forth in this permit, the Permittee is hereby authorized to discharge into the above-named receiving waters.*

ISSUANCE DATE:

EFFECTIVE DATE:

EXPIRATION DATE:

**** DRAFT ****

Alabama Department of Environmental Management

# NATIONAL POLLUTANT DISCHARGE ELIMINATION SYSTEM (NPDES) PERMIT

## TABLE OF CONTENTS

PART I DISCHARGE LIMITATIONS, CONDITIONS, AND REQUIREMENTS

A. DISCHARGE LIMITATIONS AND MONITORING REQUIREMENTS ..... 4

B. REQUIREMENTS TO ACTIVATE A PROPOSED OUTFALL ..... 5

C. RECEIVING STREAM MONITORING REQUIREMENTS ..... 5

D. STORMWATER DISCHARGE MONITORING AND INSPECTION REQUIREMENTS.
1. Stormwater Discharge Limitations and Monitoring Requirements ..... 5
2. Stormwater Inspection Requirements ..... 6
3. Recording of Results ..... 6
4. Reporting of Inspectionand Monitoring Requirements ..... 6

E. LAND APPLICATION OF TEMPORARY PIT WASTEWATERS ..... 7
1. Administrative and Reporting Requirements ..... 7
2. Technical Requirements ..... 8

F. DISCHARGE MONITORING AND RECORD KEEPING REQUIREMENTS ..... 9
1. Sampling Schedule and Frequency ..... 9
2. Measurement Frequency ..... 9
3. Monitoring Schedule ..... 10
4. Sampling Location ..... 10
5. Representative Sampling ..... 10
6. Test Procedures ..... 10
7. Recording of Results ..... 11
8. Routine Inspection by Permittee ..... 12
9. Records Retention and Production ..... 12
10. Monitoring Equipment and Instrumentation ..... 12

G. DISCHARGE REPORTING REQUIREMENTS ..... 13
1. Requirements for Reporting of Monitoring ..... 13
2. Noncompliance Notification ..... 14
3. Modification, Reduction, Suspension, or Termination of Monitoring and/or Reporting Requirements ..... 15

H. OTHER REPORTING AND NOTIFICATION REQUIREMENTS ..... 16
1. Well Drilling Notification Requirements ..... 16
2. Anticipated Noncompliance ..... 16
3. Termination of Discharge ..... 16
4. Updating Information ..... 16
5. Duty to Provide Information ..... 16

I. SCHEDULE OF COMPLIANCE ..... 16

PART II OTHER REQUIREMENTS, RESPONSIBILITIES, AND DUTIES

A. OPERATIONAL AND MANAGEMENT REQUIREMENTS ..... 17
1. Facilities Operation and Management ..... 17
2. Best Management Practices (BMPs) ..... 17
3. Biocide Additives ..... 18
4. Facility Identification ..... 19
5. Removed Substances ..... 19
6. Loss or Failure of Treatment Facilities ..... 19
7. Duty to Mitigate ..... 20

B. BYPASS AND UPSET ..... 20
1. Bypass ..... 20
2. Upset ..... 21

C. PERMIT CONDITIONS AND RESTRICTIONS ..... 21
1. Prohibition against Discharge from Facilities Not Certified ..... 21
2. Permit Modification, Suspension, Termination, and Revocation ..... 21
3. Automatic Expiration of Permits for New or Increased Discharges ..... 22
4. Transfer of Permit ..... 23
5. Groundwater ..... 23
6. Property and Other Rights ..... 23

D. RESPONSIBILITIES ..... 23
1. Duty to Comply ..... 23
2. Change in Discharge ..... 24
3. Compliance with Toxic or Other Pollutant Effluent Standard or Prohibition ..... 25
4. Compliance with Water Quality Standards and Other Provisions ..... 25
5. Compliance with Statutes and Rules ..... 25
6. Right of Entry and Inspection ..... 26
7. Duty to Reapply or Notify of Intent to Cease Discharge ..... 26

PART III ADDITIONAL REQUIREMENTS, CONDITIONS, AND LIMITATIONS

A. CIVIL AND CRIMINAL LIABILITY ..... 27
1. Tampering ..... 27
2. False Statements ..... 27
3. Permit Enforcement ..... 27
4. Relief From Liability ..... 27

B. OIL AND HAZARDOUS SUBSTANCE LIABILITY ..... 27

C. AVAILABILITY OF REPORTS ..... 27

D. DEFINITIONS ..... 27

E. SEVERABILITY ..... 30

F. PROHIBITIONS AND ACTIVIES NOT AUTHORIZED ..... 31

PART IV SPECIAL REQUIREMENTS, RESTRICTIONS, AND LIMITATIONS

A. DISCHARGES TO IMPAIRED WATERS ..... 32

B. EFFLUENT TOXICITY LIMITATIONS AND BIOMONITORING REQUIREMENTS FOR ACUTE TOXICITY ..... 32
1. Test Requirements ..... 32
2. General Test Requirements ..... 32
3. Reporting Requirements ..... 33
5. Test Methods ..... 34
6. Effluent Toxicity Testing Reports ..... 34

# PART I DISCHARGE LIMITATIONS, CONDITIONS, AND REQUIREMENTS

## A. DISCHARGE LIMITATIONS AND MONITORING REQUIREMENTS

**Produced and/or Process Wastewater Discharge Limitations and Monitoring Requirements**

During the period beginning on the effective date of this Permit and lasting through the expiration date of this Permit, the Permittee is authorized to discharge from each point source identified on Page 1 of this Permit and described more fully in the Permittee's application, if the outfalls have been constructed and certified. Discharges shall be limited and monitored by the Permittee as specified below:

| Parameter | Discharge Limitations | | | Monitoring Requirements | |
|---|---|---|---|---|---|
| | Daily Minimum | Monthly Average | Daily Maximum | Sample Type | Measurement Frequency[1] |
| pH<br>00400 | 6.0<br>s.u. | ------- | 9.0<br>s.u. | Grab | 2/Month |
| Oil & Grease<br>00556 | ------- | ------- | 15.0<br>mg/L | Grab | 2/Month |
| Chloride, Dissolved in Water<br>00941 | ------- | Report<br>mg/L | Report<br>mg/L | Grab | 2/Month |
| Iron, Total (As Fe)<br>01045 | ------- | 3.0<br>mg/L | 6.0<br>mg/L | Grab | 1/Month |
| Manganese, Total (As Mn)<br>01055 | ------- | 2.0<br>mg/L | 4.0<br>mg/L | Grab | 1/Month |
| Flow, In Conduit or Thru Treatment Plant[2]<br>50050 | ------- | Report<br>MGD | Report<br>MGD | Totalizer | 1/Day |
| Toxicity, Ceriodaphnia Acute[3]<br>61425 | ------- | ------- | 0<br>pass(0)/fail(1) | 24 hour Composite | 1/Quarter[4] |
| Toxicity, Pimephales Acute[3]<br>61427 | ------- | ------- | 0<br>pass(0)/fail(1) | 24 hour Composite | 1/Quarter[4] |

[1] See Part I.F.2. for further measurement frequency requirements.
[2] Flow must be determined at the time of sample collection by direct measurement, calculation, or other method acceptable to the Department.
[3] See Part IV.B. for Effluent Toxicity Limitations and Biomonitoring Requirements for Acute Toxicity.
[4] See Part IV.B.2.d. regarding Effluent Toxicity monitoring frequency reduction.

## B. REQUIREMENTS TO ACTIVATE A PROPOSED OUTFALL

1. Discharge from any point source identified on Page 1 of this Permit which is a proposed outfall is not authorized by this Permit until the outfall has been constructed and certification received by the Department from a professional engineer, registered in the State of Alabama, certifying that such facility has been constructed according to good engineering practices.

2. Certification required by Part I.B.1. shall be submitted on a completed ADEM Form 433. The certification shall include the latitude and longitude of the constructed and certified outfall.

3. Discharge monitoring and Discharge Monitoring Report (DMR) reporting requirements described in Parts I.F. and I.G. of this Permit do not apply to point sources that have not been constructed and certified.

4. Upon submittal of the certification required by Part I.B.1. to the Department, all monitoring and DMR submittal requirements shall apply to the constructed and certified outfall.

## C. RECEIVING STREAM MONITORING REQUIREMENTS

During the period beginning on the effective date of this Permit and lasting through the expiration date of this Permit, the Permittee is required to monitor the receiving stream for each point source identified on Page 1 of this Permit and described more fully in the Permittee's application, if the outfalls have been constructed and certified. The receiving stream shall be monitored by the Permittee downstream of the discharge at the edge of the Zone of Initial Dilution (ZID) as specified below:

| Parameter | Discharge Limitations | | | Monitoring Requirements | |
|---|---|---|---|---|---|
| | Daily Minimum | Monthly Average | Daily Maximum | Sample Type | Measurement Frequency[5] |
| Specific Conductance 00095 | ------- | Report µS/cm | Report µS/cm | Grab | 1/Quarter |
| pH 00400 | Report s.u. | ------- | Report s.u. | Grab | 1/Quarter |
| Chloride, Dissolved in Water 00941 | ------- | Report mg/L | Report mg/L | Grab | 1/Quarter |

## D. STORMWATER DISCHARGE MONITORING AND INSPECTION REQUIREMENTS

### 1. Stormwater Discharge Monitoring Requirements

During the period beginning on the effective date of this Permit and lasting through the expiration date of this Permit, the Permittee is authorized to discharge stormwater associated with the construction and operation of the facility provided that:

a. The Permittee prepares, implements, and maintains a Spill Prevention, Control and Countermeasures (SPCC) Plan in accordance with 40 CFR 112 and Part II.A.2.d. of this Permit.

[5] See Part I.F.2. for further measurement frequency requirements.

b. Best Management Practices (BMPs) be used to prevent pollution of stormwater from construction and operation of the facility. The BMPs shall, at a minimum, meet the requirements of Part II.A.2.b.

c. Stormwater discharge(s) shall have no sheen, and there shall be no discharge of visible oil, floating solids, or visible foam in other than trace amounts.

**2. Stormwater Inspection Requirements**

a. Complete and comprehensive inspections of a minimum of four percent (4%) of all wellpads, pipeline right-of-ways, treatment ponds, compressor stations, other facilities and related appurtenances, etc. covered by this Permit, including all BMPs implemented, by a professional engineer, registered in the State of Alabama or personnel under his direct supervision shall be performed every month until expiration of coverage under this Permit. The Permittee shall inspect different or additional 4% increments until all facilities (100%) have been inspected prior to repeating inspections.

b. Inspections shall be performed as often as is necessary to determine if, and ensure that, appropriate BMPs have been fully implemented and properly maintained and that stormwater runoff from the facility complies with limitations pursuant to Part I.D. of this Permit.

**3. Recording of Results**

For each inspection taken pursuant to the requirements of Part I.D.2. of this Permit, the Permittee shall record on a Department approved form the following information:

a. The NPDES#, facility name, and location, source identifier (wellpad, compressor station, pipeline, etc.), and source location;

b. The name(s) of person(s) who performed the inspection;

c. The date and time the inspection was performed;

d. Any deficiencies noted during the inspection, any corrective action or mitigation needed to correct the deficiencies, and a proposed compliance schedule for deficiencies noted as requiring significant maintenance not to exceed 14 days, unless approved in writing by the Department.

**4. Reporting of Inspection and Monitoring Requirements**

a. Inspection Summary Reports (Form 343) for stormwater discharges shall be submitted to the Director or his designee:

(1) By July 28 of each year for all inspections and monitoring performed during the preceding 12 month period ending on the last day of the month of June.

(2) With any Noncompliance Notification Form submitted pursuant to Part I.G.2. of this Permit.

b. Results of all inspections and monitoring shall be summarized on an appropriate form approved by the Department, and shall be available for inspection no later than 21 days following the date of the inspection or monitoring. Reports must be legible and bear original signature(s). Photo and electronic copies of the signature are not acceptable and shall not satisfy the reporting requirements of this Permit.

# E. LAND APPLICATION OF TEMPORARY PIT WASTEWATERS

## 1. Administrative and Reporting Requirements

a. Notwithstanding any other provisions of this Permit, one-time land application of temporary pit wastewater in conjunction with pit closure from any pit which is associated with any drilling, wellpad construction, well stimulation, collecting, land application, transport, treatment, storage, discharge, or other facility(s) and associated appurtenances for each development or production field or permitted area whose waste stream or produced water is authorized by this Permit is prohibited unless conducted or operated in accordance with all provisions of this Permit, Departmental regulations and good engineering practices.

With the exception of a one-time land application of pit wastewater in conjunction with pit closure, land application of produced water and other wastewaters generated during drilling, well stimulation, well completion, and well development is not authorized.

b. The Permittee shall prepare and submit to the Department a comprehensive, detailed operations management plan for **ONE-TIME** land application of pit wastewater in conjunction with pit closure. As a minimum, this plan must address the types of equipment utilized, application rates and procedures, and site preparation and revegetation. Application of wastewater for dust suppression or other purposes on private or public roadways, access roads, trails, or other areas must also be addressed.

c. The plan shall be prepared and certified by a professional engineer, registered in the State of Alabama.

d. The Permittee shall notify the Department at least **48 hours** prior to beginning land application. The Permittee shall re-notify the Department if land application operations are not completed within **7 days** of the initial 48 hour notification. The Permittee must report the field name, county name, wellpad number, township-range-section, nearest surface stream, and the anticipated time of application.

e. The Permittee shall complete and make available for inspection at the facility office, or at a Department-approved alternate location, the appropriate Department-approved **Land Application Certification**. The Permittee shall submit such certification(s) as required to the Department - Attn. Chief, Mining and Natural Resource Section, Water Division - within **14** days of completion of land application operations for each pit which is associated with any drilling, well stimulation, construction, collecting, transport, treatment, storage, discharge, or other facility(s) and associated appurtenances for each development or production field or permitted area whose waste stream or produced water discharge is authorized by this Permit.

(1) The certification form must be complete and correct. Forms that contain missing or incomplete responses are not acceptable. The certification must be signed by a registered professional engineer, registered in the State of Alabama, along with the registration number and stamped with the professional seal. In addition, the certification must be signed by a Responsible Corporate Official (RCO) of the level of vice-president or above with the authority to prevent and abate possible violations. The RCO may designate an employee such as a project manager with environmental experience who is familiar with the plan to sign the certification form as an agent of the RCO. The RCO must notify the ADEM in writing with the name of the designated employee.

(2) The certification shall contain at a minimum the name of the Permittee, field name, NPDES number, county, wellpad name and number, latitude and

longitude, township-range-section to the nearest 1/4 section, nearest surface receiving stream, pH (s.u.), TDS (mg/l), and the date and the name of the Department representative that was notified.

(3) In addition the certification shall contain the following statement:

"Based upon the inspections of (dates and times) _____ performed prior to and during land application of pit wastewater from the pit(s) located at the site referenced above, which I or personnel under my direct supervision (list:_____) conducted, I certify that each land application site and all application equipment was in accordance with the land application procedures plan filed with the Department, that the pumped pit wastewater did not contain visible, floating material or oil & grease, and that all application procedures and operations were conducted in accordance with the above-referenced NPDES permit and ADEM regulations.

I further certify that no unauthorized discharge to surface or ground waters has occurred as a result of these activities."

f. The Permittee shall **IMMEDIATELY** notify the Department upon learning of any possible or probable discharge to State waters resulting from land application or any other activities associated with coalbed methane operations.

**2. Technical Requirements**

a. Approval of a land application plan assumes that a relatively small volume of wastewater will be disposed of and, due to the small quantity involved, groundwater quality will be unaffected. Land application of pit sludge, solids or other wastes is prohibited.

b. Only wastewater having a total dissolved solids concentration (TDS) of 2,000 mg/l or less and a pH between 6.0 and 9.0 standard units may be land applied. Wastewater must be free of visible, floating solids or oil and grease. The Permittee must ensure that **ONLY** wastewater is land applied and that all solids and sediments remain in the pit. It may be necessary to filter the wastewater during land application to ensure compliance. Land application **MUST** cease immediately if at any time the applied effluent does not comply or will not comply, if application continues, with the minimum standards as stated above.

c. Wastewater must be uniformly applied over an area of sufficient expanse and at such a rate to prevent runoff of applied wastewater. Wastewater may be land applied **ONLY** to areas that wastewater has not previously been applied, unless re-application is specifically authorized in writing by the Department.

d. Application of wastewater is prohibited during rain events or when the soil is saturated or sufficiently moist as to prevent percolation of all wastewater applied.

e. Wastewater shall not be applied in such a manner that natural vegetation is discolored, killed, or otherwise adversely impacted. If the natural vegetation is adversely impacted, the Permittee shall ensure that the application area is revegetated to pre-spray conditions.

f. Wastewater shall not be applied on severe slopes, near sink holes, near natural drainage courses, near streams or other water bodies, nor in any other manner that will allow runoff of the wastewater from the application area.

g. The Permittee shall maintain a record of the results of the tests performed prior to land application to include the date the sample was collected, the name of the person

performing the analysis, method of analysis, the date that the analysis was performed, the last date on which any substance was placed in the pit, the date that the wastewater was land applied, the amount of wastewater applied, and the location of the area on which the pit wastewater was land applied. This record shall be signed by the appropriate representative of the Permittee and retained for a period of at least three years after pit closure. Land application records shall be made available on request to the Department.

h. In recognition that land application is site specific in nature the Department reserves the right to require the operator to provide additional information or implement added measures in addition to the above described minimum standards to ensure compliance with this Permit, State law, and Departmental regulations.

**3. Prohibitions**

Unless specifically authorized elsewhere in this Permit, Part I.E. of this Permit does not authorize the Permittee to land apply produced water from coalbed methane production operations.

## F. DISCHARGE MONITORING AND RECORD KEEPING REQUIREMENTS

**1. Sampling Schedule and Frequency**

a. The Permittee shall collect samples of the discharge from each constructed and certified point source identified on Page 1 of this Permit and described more fully in the Permittee's application, at the frequency specified in Part I.A. Analysis of the samples shall be conducted for the parameters specified in Part I.A.

b. The Permittee may increase the frequency of sampling listed in Parts I.F.1.a; however, all sampling results must be reported to the Department and included in any calculated results submitted to the Department in accordance with this Permit.

**2. Measurement Frequency**

Measurement frequency requirements found in Parts I.A. and I.C. shall mean:

a. A measurement frequency of one day per week shall mean sample collection on any day of discharge which occurs every calendar week.

b. A measurement frequency of two days per month shall mean sample collection on any day of discharge which occurs every other week, but need not exceed two sample days per month, and are no less than seven days apart. However, if discharges occur only during one seven-day period in a month, then two days per month shall mean sample collection on any two days during that seven-day period.

c. A measurement frequency of one day per month shall mean sample collection on any day of discharge which occurs during each calendar month.

d. A measurement frequency of one day per quarter shall mean sample collection on any day of discharge which occurs during each calendar quarter.

e. A measurement frequency of one day per six months shall mean sample collection on any day of discharge which occurs during the period of January through June and during the period of July through December.

f. A measurement frequency of one day per year shall mean sample collection on any day of discharge which occurs during each calendar year.

3. **Monitoring Schedule**

The Permittee shall conduct the monitoring required by Parts I.A. and I.C. in accordance with the following schedule:

a. MONITORING REQUIRED MORE FREQUENTLY THAN MONTHLY AND MONTHLY shall be conducted during the first full month following the effective date of coverage under this Permit and every month thereafter. More frequently than monthly and monthly monitoring may be done anytime during the month, unless restricted elsewhere in this Permit, but the results should be reported on the last Discharge Monitoring Report (DMR) due for the quarter (i.e., with the March, June, September, and December DMRs).

b. QUARTERLY MONITORING shall be conducted at least once during each calendar quarter. Calendar quarters are the periods of January through March, April through June, July through September, and October through December. The Permittee shall conduct the quarterly monitoring during the first complete calendar quarter following the effective date of this Permit and is then required to monitor once during each quarter thereafter. Quarterly monitoring may be done anytime during the quarter, unless restricted elsewhere in this Permit, but the results should be reported on the last DMR due for the quarter (i.e., with the March, June, September, and December DMRs).

c. SEMIANNUAL MONITORING shall be conducted at least once during the period of January through June and at least once during the period of July through December. The Permittee shall conduct the semiannual monitoring during the first complete semiannual calendar period following the effective date of this Permit and is then required to monitor once during each semiannual period thereafter. Semiannual monitoring may be done anytime during the semiannual period, unless restricted elsewhere in this Permit, but it should be reported on the last DMR due for the month of the semiannual period (i.e., with the June and December DMRs).

d. ANNUAL MONITORING shall be conducted at least once during the period of January through December. The Permittee shall conduct the annual monitoring during the first twelve (12) month period following the effective date of this Permit and is then required to monitor once during each calendar annual period thereafter. Annual monitoring may be done anytime during the year, unless restricted elsewhere in this Permit, but it should be reported on the December DMR.

4. **Sampling Location**

Unless restricted elsewhere in this Permit, samples collected to comply with the monitoring requirements specified in Part I.A. shall be collected at the nearest accessible location just prior to discharge and after final treatment, or at an alternate location approved in writing by the Department.

5. **Representative Sampling**

Sample collection and measurement actions taken as required herein shall be representative of the volume and nature of the monitored discharge and shall be in accordance with the provisions of this Permit.

6. **Test Procedures**

For the purpose of reporting and compliance, Permittees shall use one of the following procedures:

a. For parameters with an EPA established Minimum Level (ML), report the measured value if the analytical result is at or above the ML and report "0" for values below the ML. Test procedures for the analysis of pollutants shall conform to 40 CFR Part 136, guidelines published pursuant to Section 304(h) of the FWPCA, 33 U.S.C. Section 1314(h), and ADEM Standard Operating Procedures. If more than one method for analysis of a substance is approved for use, a method having a minimum level lower than the permit limit shall be used. If the minimum level of all methods is higher than the permit limit, the method having the lowest minimum level shall be used and a report of less than the minimum level shall be reported as zero and will constitute compliance, however should EPA approve a method with a lower minimum level during the term of this Permit the Permittee shall use the newly approved method.

b. For pollutant parameters without an established ML, an interim ML may be utilized. The interim ML shall be calculated as 3.18 times the Method Detection Level (MDL) calculated pursuant to 40 CFR Part 136, Appendix B.

Permittees may develop an effluent matrix-specific ML, where an effluent matrix prevents attainment of the established ML. However, a matrix specific ML shall be based upon proper laboratory method and technique. Matrix-specific MLs must be approved by the Department, and may be developed by the Permittee during permit issuance, reissuance, modification, or during compliance schedule.

In either case the measured value should be reported if the analytical result is at or above the ML and "0" reported for values below the ML.

c. For parameters without an EPA established ML, interim ML, or matrix-specific ML, a report of less than the detection limit shall constitute compliance if the detection limit of all analytical methods is higher than the Permit limit using the most sensitive EPA approved method. For the purpose of calculating a monthly average, "0" shall be used for values reported less than the detection limit.

The Minimum Level utilized for procedures identified in Parts I.F.6.a. and b. shall be reported on the Permittee's DMR. When an EPA approved test procedure for analysis of a pollutant does not exist, the Director shall approve the procedure to be used.

7. **Recording of Results**

For each measurement or sample taken pursuant to the requirements of this Permit, the Permittee shall record the following information:

a. The facility name and location, point source number, date, time, and exact place of sampling or measurements;

b. The name(s) of person(s) who obtained the samples or measurements;

c. The dates and times the analyses were performed;

d. The name(s) of the person(s) who performed the analyses;

e. The analytical techniques or methods used including source of method and method number; and

f. The results of all required analyses.

**8. Routine Inspection by Permittee**

a. The Permittee shall inspect all certified point sources identified on Page 1 of this Permit and described more fully in the Permittee's application and all treatment or control facilities or systems used by the Permittee to achieve compliance with the terms and conditions of this Permit at least as often as the applicable sampling frequency specified in Part I.A. of this Permit.

b. If required by the Director, the Permittee shall maintain a written log for each point source identified on Page 1 of this Permit and described more fully in the Permittee's application in which the Permittee shall record the following information:

(1) The date and time the point source and any associated treatment or control facilities or systems were inspected by the Permittee;

(2) Whether there was a discharge from the point source at the time of inspection by the Permittee;

(3) Whether a sample of the discharge from the point source was collected at the time of inspection by the Permittee;

(4) Whether all associated treatment or control facilities or systems appeared to be in good working order and operating as efficiently as possible, and if not, a description of the problems or deficiencies; and

(5) The name and signature of the person performing the inspection of the point source and associated treatment or control facilities or systems.

**9. Records Retention and Production**

a. The Permittee shall retain records of all monitoring information, including all calibration and maintenance records, copies of all reports required by this Permit, and records of all data used to complete the above reports or the application for this Permit, for a period of at least three (3) years from the date of the sample collection, measurement, report, or application. This period may be extended by request of the Director at any time. If litigation or other enforcement action, under the AWPCA, AEMA, and/or the FWPCA, is ongoing which involves any of the above records, the records shall be kept until the litigation is resolved. Upon the written request of the Director, the Permittee shall provide the Director with a copy of any record required to be retained by this paragraph. Copies of these records should not be submitted unless requested.

b. All records required to be kept in accordance with Part I.F.9.a. shall be kept at the permitted facility or an alternate location approved by the Department in writing and shall be available for inspection.

**10. Monitoring Equipment and Instrumentation**

All equipment and instrumentation used to determine compliance with the requirements of this Permit shall be installed, maintained, and calibrated in accordance with the manufacturer's instructions or, in the absence of manufacturer's instructions, in accordance with accepted practices. The Permittee shall develop and maintain quality assurance procedures to ensure proper operation and maintenance of all equipment and instrumentation. The quality assurance procedures shall include the proper use, maintenance, and installation, when appropriate, of monitoring equipment at the plant site.

# G. DISCHARGE REPORTING REQUIREMENTS

## 1. Requirements for Reporting of Monitoring

a. Monitoring results obtained during the previous three (3) months shall be summarized for each month on a Discharge Monitoring Report (DMR) Form approved by the Department, and submitted to the Department so that it is received by the Director no later than the 28th day of the month following the quarterly reporting period (i.e., on the 28th day of January, April, July, and October of each year).

b. The Department utilizes a web-based electronic environmental (E2) reporting system for submittal of DMRs. **Except as allowed by Part I.G.1.c. or d., the Permittee shall submit all DMRs required by Part I.G.1.a. by utilizing the E2 reporting system.** The E2 reporting system Permittee Participation Package may be downloaded online at https://e2.adem.alabama.gov/npdes.

c. If the electronic environmental (E2) reporting system is down (i.e. electronic submittal of DMR data is unable to be completed due to technical problems originating with the Department's system; this could include entry/submittal issues with an entire set of DMRs or individual parameters), permittees are not relieved of their obligation to submit DMR data to the Department by the required submittal date. However, if the E2 system is down on the 28th day of the month or is down for an extended period of time as determined by the Department when a DMR is required to be submitted, the facility may submit the data in an alternate manner and format acceptable to the Department. Preapproved alternate acceptable methods include faxing, e-mailing, mailing, or hand-delivery of data such that they are received by the required reporting date. Within five calendar days of the E2 system resuming operation, the Permittee shall enter the data into the E2 reporting system unless an alternate timeframe is approved by the Department. An attachment should be included with the E2 DMR submittal verifying the original submittal date (date of the fax, copy of dated e-mail, or hand-delivery stamped date).

d. The permittee may submit a request to the Department for a temporary electronic reporting waiver for DMR submittals. The waiver request should include the permit number; permittee name; facility/site name; facility address; name, address, and contact information for the responsible official or duly authorized representative; a detailed statement regarding the basis for requesting such a waiver; and the duration for which the waiver is requested. Approved electronic reporting waivers are not transferrable. Permittees with an approved electronic reporting waiver for DMRs may submit hard copy DMRs for the period that the approved electronic reporting waiver request is effective. The Permittee shall submit the Department-approved DMR forms to the address listed in Part I.G.1.i.

e. If the Permittee, using approved analytical methods as specified in Part I.F.6., monitors any discharge from a point source identified on Page 1 of this Permit and describe more fully in the Permittee's application more frequently than required by this Permit; the results of such monitoring shall be included in the calculation and reporting of values on the DMR Form, and the increased frequency shall be indicated on the DMR Form.

f. In the event no discharge from a point source identified on Page 1 of this Permit and described more fully in the Permittee's application occurs during a monitoring period, the Permittee shall report "No Discharge" for such period on the appropriate DMR Form.

g. Each DMR Form submitted by the Permittee to the Department in accordance with Part I.G.1. must be legible and bear an original signature or electronic signature. Photo and electronic copies of the signature are not acceptable and shall not satisfy the reporting requirements of this Permit.

h. All reports and forms required to be submitted by this Permit, the AWPCA, and the Department's rules and regulations, shall be signed by a "responsible official" of the Permittee as defined in ADEM Admin. Code r. 335-6-6-.09 or a "duly authorized representative" of such official as defined in ADEM Admin. Code r. 335-6-6-.09 and shall bear the following certification:

> "I certify under penalty of law that this document and all attachments were prepared under my direction or supervision in accordance with a system designed to assure that qualified personnel properly gather and evaluate the information submitted. Based on my inquiry of the person or persons who manage the system, or those persons directly responsible for gathering the information, the information submitted is, to the best of my knowledge and belief, true, accurate, and complete. I am aware that there are significant penalties for submitting false information, including the possibility of fine and imprisonment for knowing violations."

i. All DMRs, reports, and forms required to be submitted by this Permit, the AWPCA and the Department's rules and regulations, shall be addressed to:

> Alabama Department of Environmental Management
> Water Division, Mining and Natural Resource Section
> Post Office Box 301463
> Montgomery, Alabama 36130-1463

Certified and Registered Mail shall be addressed to:

> Alabama Department of Environmental Management
> Water Division, Mining and Natural Resource Section
> 1400 Coliseum Boulevard
> Montgomery, Alabama 36110-2059

j. Unless authorized in writing by the Department, approved reporting forms required by this Permit or the Department are not to be altered, and if copied or reproduced, must be consistent in format and identical in content to the ADEM approved form. Unauthorized alteration, falsification, or use of incorrectly reproduced forms constitutes noncompliance with the requirements of this Permit and may significantly delay processing of any request, result in denial of the request, result in permit termination, revocation, suspension, modification, or denial of a permit renewal application, or result in other enforcement action.

k. If this Permit is a reissuance, then the Permittee shall continue to submit DMRs in accordance with the requirements of their previous permit until such time as DMRs are due as discussed in Part I.G.1.

**2. Noncompliance Notification**

a. The Permittee must notify the Department if, for any reason, the Permittee's discharge:

(1) Potentially threatens human health or welfare;

(2) Potentially threatens fish or aquatic life;

(3) Causes or contributes to an exceedance of an in-stream water quality standard or causes or contributes to an exceedance of the EPA suggested chronic criteria for

total chlorides of 230 mg/L at the downstream edge of the regulatory mixing zone and, when the discharge is mixed with the receiving stream by a high rate diffuser, the EPA suggested acute criteria for total chlorides of 860 mg/L at the downstream edge of the zone of initial dilution;

(4) Does not comply with an applicable toxic pollutant effluent standard or prohibition established under Section 307(a) of the FWPCA, 33 U.S.C. §1317(a);

(5) Contains a quantity of a hazardous substance which has been determined may be harmful to the public health or welfare under Section 311(b)(4) of the FWPCA, 33 U.S.C. §1321(b)(4); or

(6) Exceeds any discharge limitation for an effluent parameter as a result of an unanticipated bypass or upset.

The Permittee shall orally or electronically report any of the above occurrences, describing the circumstances and potential effects of such discharge to the Director within 24-hours after the Permittee becomes aware of the occurrence of such discharge. In addition to the oral or electronic report, the Permittee shall submit to the Director a written report as provided in Part I.G.2.c., no later than five (5) days after becoming aware of the occurrence of such discharge.

b. If for any reason, the Permittee's discharge does not comply with any limitation of this Permit, the Permittee shall submit a written report to the Director, as provided in Part I.G.2.c. This report must be submitted with the next Discharge Monitoring Report required to be submitted by Part I.G.1. of this Permit after becoming aware of the occurrence of such noncompliance.

c. Any written report required to be submitted to the Director in accordance with Parts I.G.2.a. and b. shall be submitted using a Noncompliance Notification Form (ADEM Form 421) available on the Department's website (http://adem.alabama.gov/DeptForms/Form421.pddf) and include the following information:

(1) A description of the discharge and cause of noncompliance;

(2) The period of noncompliance, including exact dates and times, or if not corrected, the anticipated time the noncompliance is expected to continue; and

(3) A description of the steps taken and/or being taken to reduce or eliminate the noncompliance and to prevent its recurrence.

**3. Modification, Reduction, Suspension, or Termination of Monitoring and/or Reporting Requirements**

a. The Director may, with respect to any point source identified on Page 1 of this Permit and described more fully in the Permittee's application, authorize the Permittee to modify, reduce, suspend, or terminate the monitoring and/or reporting required by this Permit upon the submission of a written request for such modification, reduction, suspension, or termination by the Permittee, supported by sufficient data as provided in applicable sections of this Permit.

b. It remains the responsibility of the Permittee to comply with the monitoring and reporting requirements of this Permit until written authorization to modify, reduce, suspend, or terminate such monitoring and/or reporting is received by the Permittee from the Director.

## H. OTHER REPORTING AND NOTIFICATION REQUIREMENTS

### 1. Well Drilling Notification Requirements

Notification shall be provided to the Department at least seven days prior to the commencement of the well drilling phase of construction of each well.

### 2. Anticipated Noncompliance

The Permittee shall give the Director written advance notice of any planned changes or other circumstances regarding a facility which may result in noncompliance with permit requirements.

### 3. Termination of Discharge

The Permittee shall notify the Director, in writing, when all discharges from any point source(s) identified on Page 1 of this Permit and described more fully in the Permittee's application have permanently ceased. This notification shall serve as sufficient cause for instituting procedures for termination of the Permit.

### 4. Updating Information

a. The Permittee shall inform the Director of any change in the Permittee's mailing address or telephone number or in the Permittee's designation of a facility contact or officer(s) having the authority and responsibility to prevent and abate violations of the AWPCA, the AEMA, the Department's rules and regulations, and the terms and conditions of this Permit, in writing, no later than ten (10) days after such change. Upon request of the Director, the Permittee shall furnish the Director with an update of any information provided in the permit application.

b. If the Permittee becomes aware that it failed to submit any relevant facts in a permit application, or submitted incorrect information in a permit application or in any report to the Director, it shall promptly submit such facts or information with a written explanation for the mistake and/or omission.

### 5. Duty to Provide Information

a. The Permittee shall furnish to the Director, within a reasonable time, any information which the Director may request to determine whether cause exists for modifying, suspending, terminating, or revoking and reissuing this Permit, in whole or in part, or to determine compliance with this Permit. The Permittee shall also furnish to the Director upon request, copies of records required to be maintained by this Permit.

b. The Permittee shall furnish to the Director upon request, within a reasonable time, available information (name, phone number, address, and site location) which identifies offsite sources of material or natural resources (mineral, ore, or other material such as iron, coal, coke, dirt, chert, shale, clay, sand, gravel, bauxite, rock, stone, etc.) used in its operation or stored at the facility.

## I. SCHEDULE OF COMPLIANCE

The Permittee shall achieve compliance with the discharge limitations specified in Part I.A. of this Permit in accordance with the following schedule:

**Compliance must be achieved by the effective date of this Permit.**

# PART II OTHER REQUIREMENTS, RESPONSIBILITIES, AND DUTIES

## A. OPERATIONAL AND MANAGEMENT REQUIREMENTS

### 1. Facilities Operation and Management

The Permittee shall at all times operate and maintain all facilities and systems of treatment and control (and related appurtenances) which are installed or used by the Permittee to achieve compliance with the conditions of this Permit. Proper operation and maintenance includes effective performance, adequate funding, adequate operator staffing and training, and adequate laboratory and process controls, including appropriate quality assurance procedures.

### 2. Best Management Practices (BMPs)

a. Dilution water shall not be added to achieve compliance with discharge limitations except when the Director has granted prior written authorization for dilution to meet water quality requirements.

b. No later than ninety (90) days after the issuance date of this Permit, the Permittee shall prepare, submit to the Department, and implement a Best Management Practices (BMPs) Plan that addresses the control of all nonpoint source pollution that is or may be associated with the Permittee's operations. These BMP plans should be based on best available technology, and include, but not be limited to, containment of any or all process liquids or solids in a manner such that these materials do not present a potential for discharge; stormwater runoff associated with wellpad construction and maintenance, roads, borrow pits less than 5 acres in size, and dirt or other material stockpiles; and water, wastewater, and other fluids acquisition operations that is or may be associated with the Permittee's operations. Protection and preservation of all surface waters onsite should be discussed, including (but not limited to) stream crossing(s), access roads, and other construction activities adjacent to waters of the State. When submitted, the BMP Plan shall become a part of this Permit and all requirements of the BMP Plan shall become requirements of this Permit. The BMPs shall include at a minimum:

(1) Plans to prevent or control pollution of stormwater by soil particles to the degree required to maintain compliance with this Permit and water quality standards;

(2) Plans to prevent the spillage or loss of any fluids, oil, grease, etc. and thereby prevent the contamination of stormwater from these substances;

(3) Plans to provide for the disposal of all used oils, hydraulic fluids, solvent degreasing materials, etc. in accordance with good management practices and any applicable state or federal regulations;

(4) Plans to prevent or minimize stormwater contact with any pollutants present at the facility;

(5) Descriptions of stormwater volume and velocity controls within the site to minimize soil erosion;

(6) Plans to minimize the amount of soil exposed during construction activity through the use of project phasing or other appropriate techniques;

(7) Plans to minimize the disturbance of steep slopes, unless infeasible;

(8) Plans to minimize sediment discharges from the site;

(9) Plans to minimize the generation of dust;

(10) Descriptions of construction entrance and exit stabilization to minimize off-site tracking of sediment from vehicles;

(11) Plans to minimize soil compaction and, unless infeasible, preserve topsoil;

(12) If applicable, the location and description of each borrow pit, a description of the stormwater discharge controls, and how the borrow pits will be reclaimed or closed in order to remediate any potential adverse impacts on water quality;

(13) If applicable, the exact location of each water, wastewater, and other fluids acquisition site and the method of withdrawal;

(14) If applicable, plans for the protection and preservation of all surface waters at all fluids acquisition sites or other waters which might be impacted, including, but not limited to, rivers, perennial and intermittent streams, lakes or impoundments, ponded areas, old treatment lagoons and sedimentation basins, dry hollows, subsurface wells, and all areas adjacent to waters of the State that are disturbed during water acquisition.

c. All borrow pits authorized by this permit must at all times total less than five unreclaimed acres, and must be used exclusively by the Permittee for the permitted facility. In addition to the inspections conducted by the Permittee referenced in Part I.D.2., of this Permit, the Permittee must conduct, at a minimum, monthly inspections of the borrow pits. The inspections of the borrow pits may not be used when calculating the monthly 4% increments of the Permitted facility.

d. Spill Prevention, Control, and Management

The Permittee shall prepare, implement, and maintain a Spill Prevention, Control and Countermeasures (SPCC) Plan acceptable to the Department that is prepared and certified by a Professional Engineer (PE), registered in the State of Alabama, for all onsite petroleum product or other pollutant storage tanks or containers as required by applicable state (ADEM Admin. Code r. 335-6-6-.12 (r)) and federal (40 C.F.R. §§112.1-.7) regulations. The Permittee shall implement appropriate structural and/or non-structural spill prevention, control, and/or management sufficient to prevent any spills of pollutants from entering a ground or surface water of the State or a publicly or privately owned treatment works. Careful consideration should be applied for tanks or containers located near treatment ponds, water bodies, or high traffic areas. In most situations this would require construction of a containment system if the cumulative storage capacity of petroleum products or other pollutants at the facility is greater than 1320 gallons. Any containment system used to implement this requirement shall be constructed of materials compatible with the substance(s) contained and shall prevent the contamination of groundwater. Such containment systems shall be capable of retaining a volume equal to 110 percent of the capacity of the largest tank for which containment is provided. The applicant shall maintain onsite or have readily available flotation booms to contain, and sufficient material to absorb, fuel and chemical spills and leaks. Soil contaminated by chemical spills, oil spills, etc., must be immediately cleaned up or be removed and disposed of in an approved manner.

**3. Biocide Additives**

a. The Permittee shall notify the Director in writing not later than sixty (60) days prior to instituting the use of any biocide corrosion inhibitor or chemical additive in any cooling

or boiler system(s) regulated by this Permit. Notification is not required for additives that should not reasonably be expected to cause the cooling water or boiler water to exhibit toxicity as determined by analysis of manufacturer's data or testing by the Permittee. Such notification shall include:

(1) Name and general composition of biocide or chemical;

(2) 96-hour median tolerance limit data for organisms representative of the biota of the water(s) which the discharge(s) enter(s);

(3) Quantities to be used;

(4) Frequencies of use;

(5) Proposed discharge concentrations; and

(6) EPA registration number, if applicable.

b. The use of any biocide or chemical additive containing tributyl tin, tributyl tin oxide, zinc, chromium, or related compounds in any cooling or boiler system(s) regulated by the Permit is prohibited except as exempted below. The use of a biocide or additive containing zinc, chromium or related compounds may be used in special circumstances if (1) the Permit contains limits for these substances, or (2) the applicant demonstrates during the application process that the use of zinc, chromium or related compounds as a biocide or additive will not pose a reasonable potential to violate the applicable State water quality standards for these substances. The use of any additive, not identified in this Permit or in the application for this Permit or not exempted from notification under this Permit is prohibited, prior to a determination by the Department that permit modification to control discharge of the additive is not required or prior to issuance of a permit modification controlling discharge of the additive.

**4. Facility Identification**

The Permittee shall clearly display prior to commencement of any regulated activity and until permit coverage is properly terminated, the name of the Permittee, entire NPDES permit number, facility or site name, and other descriptive information deemed appropriate by the Permittee at an easily accessible location(s) to adequately identify the site, unless approved otherwise in writing by the Department. The Permittee shall repair or replace the sign(s) as necessary upon becoming aware that the identification is missing or is unreadable due to age, vandalism, theft, weather, or other reason(s).

**5. Removed Substances**

Solids, sludges, filter backwash, or any other pollutants or other wastes removed in the course of treatment or control of wastewaters shall be disposed of in a manner that complies with all applicable Department rules and regulations.

**6. Loss or Failure of Treatment Facilities**

Upon the loss or failure of any treatment facility, including but not limited to the loss or failure of the primary source of power of the treatment facility, the Permittee shall, where necessary to maintain compliance with the discharge limitations specified in Part I.A. of this Permit or any other terms or conditions of this Permit, cease, reduce, or otherwise control production and/or discharges until treatment is restored.

7. **Duty to Mitigate**

The Permittee shall promptly take all reasonable steps to minimize or prevent any violation of this Permit or to mitigate and minimize any adverse impact to waters resulting from noncompliance with any discharge limitation specified in Part I.A. of this Permit, including such accelerated or additional monitoring of the discharge and/or the receiving waterbody as is necessary to determine the nature and impact of the noncomplying discharge.

## B. BYPASS AND UPSET

1. **Bypass**

a. Any bypass is prohibited except as provided in Parts II.B.1.b. and c.

b. A bypass is not prohibited if:

(1) It does not cause any applicable discharge limitation specified in Part I.A. of this Permit to be exceeded;

(2) The discharge resulting from such bypass enters the same receiving water as the discharge from the permitted outfall;

(3) It is necessary for essential maintenance of a treatment or control facility or system to assure efficient operation of such facility or system; and

(4) The Permittee monitors the discharge resulting from such bypass at a frequency, at least daily, sufficient to prove compliance with the discharge limitations specified in Part I.A. of this Permit.

c. A bypass is not prohibited and need not meet the discharge limitations specified in Part I.A. of this Permit if:

(1) It is unavoidable to prevent loss of life, personal injury, or severe property damage;

(2) There are no feasible alternatives to the bypass, such as the use of auxiliary treatment facilities, retention of untreated wastes, or maintenance during normal periods of equipment downtime. This condition is not satisfied if the Permittee could have installed adequate backup equipment to prevent a bypass which occurred during normal periods of equipment downtime or preventive maintenance; and

(3) The Permittee submits a written request for authorization to bypass to the Director at least ten (10) days, if possible, prior to the anticipated bypass or within 24 hours of an unanticipated bypass, the Permittee is granted such authorization, and Permittee complies with any conditions imposed by the Director to minimize any adverse impact to waters resulting from the bypass.

d. The Permittee has the burden of establishing that each of the conditions of Parts II.B.1.b. or c. have been met to qualify for an exception to the general prohibition against bypassing contained in Part II.B.1.a. and an exemption, where applicable, from the discharge limitations specified in Part I.A. of this Permit.

2. Upset

a. A discharge which results from an upset need not meet the applicable discharge limitations specified in Part I.A. of this Permit if:

(1) No later than 24-hours after becoming aware of the occurrence of the upset, the Permittee orally reports the occurrence and circumstances of the upset to the Director; and

(2) No later than five (5) days after becoming aware of the occurrence of the upset, the Permittee furnishes the Director with evidence, including properly signed, contemporaneous operating logs, design drawings, construction certification, maintenance records, weir flow measurements, dated photographs, rain gauge measurements, or other relevant evidence, demonstrating that:

(a) An upset occurred;

(b) The Permittee can identify the specific cause(s) of the upset;

(c) The Permittee's treatment facility was being properly operated at the time of the upset; and

(d) The Permittee promptly took all reasonable steps to minimize any adverse impact to waters resulting from the upset.

b. The Permittee has the burden of establishing that each of the conditions of Part II.B.2.a. have been met to qualify for an exemption from the discharge limitations specified in Part I.A. of this Permit.

## C. PERMIT CONDITIONS AND RESTRICTIONS

1. **Prohibition against Discharge from Facilities Not Certified**

a. Notwithstanding any other provisions of this Permit, any discharge(s) from any point source(s) from the permitted facility which was not certified to the Department by a professional engineer, registered in the State of Alabama, as being designed, constructed, and able to be operated in accordance with design plans reviewed by the Department, terms and conditions of this Permit, Departmental regulations and good engineering practices, is prohibited until the Permittee submits to the Department, on a form approved by the Department, a certification by a professional engineer certifying that all such facility(s) have been constructed and are able to be operated in accordance with design plans reviewed by the Department, terms and conditions of this Permit, Departmental regulations and good engineering practices.

2. **Permit Modification, Suspension, Termination, and Revocation**

a. This Permit may be modified, suspended, terminated, or revoked and reissued, in whole or in part, during its term for cause, including but not limited to, the following:

(1) The violation of any term or condition of this Permit;

(2) The obtaining of this Permit by misrepresentation or the failure to disclose fully all relevant facts;

(3) The submission of materially false or inaccurate statements or information in the permit application or reports required by the Permit;

(4) The need for a change in any condition that requires either a temporary or permanent reduction or elimination of the permitted discharge;

(5) The existence of any typographical or clerical errors or of any errors in the calculation of discharge limitations;

(6) The existence of material and substantial alterations or additions to the facility or activity generating wastewater which occurred after permit issuance which justify the application of permit conditions that are different or absent in the existing permit;

(7) The threat of the Permittee's discharge on human health or welfare; or

(8) Any other cause allowed by ADEM Admin. Code ch. 335-6-6.

b. The filing of a request by the Permittee for modification, suspension, termination, or revocation and reissuance of this Permit, in whole or in part, does not stay any Permit term or condition of this Permit.

3. **Automatic Expiration of Permits for New or Increased Discharges**

a. Except as provided by ADEM Admin. Code r. 335-6-6-.02(g) and 335-6-6-.05, if this Permit was issued for a new discharger or new source, it shall expire eighteen months after the issuance date if construction has not begun during that eighteen month period.

b. Except as provided by ADEM Admin. Code r. 335-6-6-.02(g) and 335-6-6-.05, if any portion of this Permit was issued or modified to authorize the discharge of increased quantities of pollutants to accommodate the modification of an existing facility, that portion of this Permit shall expire eighteen months after this Permit's issuance if construction of the modification has not begun within eighteen month period.

c. Construction has begun when the owner or operator has:

(1) Begun, or caused to begin as part of a continuous on-site construction program:

(i) Any placement, assembly, or installation of facilities or equipment; or

(ii) Significant site preparation work including clearing, excavation, or removal of existing buildings, structures, or facilities which is necessary for the placement, assembly, or installation of new source facilities or equipment; or

(2) Entered into a binding contractual obligation for the purpose of placement, assembly, or installation of facilities or equipment which are intended to be used in its operation within a reasonable time. Options to purchase or contracts which can be terminated or modified without substantial loss, and contracts for feasibility, engineering, and design studies do not constitute a contractual obligation under the paragraph. The entering into a lease with the State of Alabama for exploration and production of hydrocarbons shall also be considered beginning construction.

d. The automatic expiration of this Permit for new or increased discharges if construction has not begun within the eighteen month period after the issuance of this Permit may be tolled by administrative or judicial stay.

4. **Transfer of Permit**

This Permit may not be transferred or the name of the Permittee changed without notice to the Director and subsequent modification or revocation and reissuance of this Permit to identify the new Permittee and to incorporate any other changes as may be required under the FWPCA or AWPCA. In the case of a change in name, ownership, or control of the Permittee's premises only, a request for permit modification in a format acceptable to the Director is required at least 30 days prior to the change. In the case of a change in name, ownership, or control of the Permittee's premises accompanied by a change or proposed change in effluent characteristics, a complete permit application is required to be submitted to the Director at least 180 days prior to the change. Whenever the Director is notified of a change in name, ownership, or control, he may decide not to modify the existing Permit and require the submission of a new permit application.

5. **Groundwater**

Unless authorized on page 1 of this Permit, this Permit does not authorize any discharge to groundwater. Should a threat of groundwater contamination occur, the Director may require groundwater monitoring to properly assess the degree of the problem, and the Director may require that the Permittee undertake measures to abate any such discharge and/or contamination.

6. **Property and Other Rights**

This Permit does not convey any property rights in either real or personal property, or any exclusive privileges, nor does it authorize any injury to persons or property or invasion of other private rights, trespass, or any infringement of Federal, State, or local laws or regulations, nor does it authorize or approve the construction of any physical structures or facilities or the undertaking of any work in any waters of the State or of the United States.

## D. RESPONSIBILITIES

1. **Duty to Comply**

a. The Permittee must comply with all terms and conditions of this Permit. Any permit noncompliance constitutes a violation of the AWPCA, AEMA, and the FWPCA and is grounds for enforcement action, permit termination, revocation and reissuance, suspension, modification, or denial of a permit renewal application.

b. The Permittee shall comply with effluent standards or prohibitions established under Section 307(a) of the FWPCA for toxic pollutants within the time provided in the regulations that establish these standards or prohibitions, even if this Permit has not yet been modified to incorporate the effluent standard, prohibition or requirement.

c. For any violation(s) of this Permit, the Permittee is subject to a civil penalty as authorized by the AWPCA, the AEMA, the FWPCA, and Code of Alabama 1975, §§22-22A-1 et. seq., as amended, and/or a criminal penalty as authorized by Code of Alabama 1975, §22-22-1 et. seq., as amended.

d. The necessity to halt or reduce production or other activities in order to maintain compliance with the conditions of this Permit shall not be a defense for a Permittee in an enforcement action.

e. Nothing in this Permit shall be construed to preclude or negate the Permittee's responsibility or liability to apply for, obtain, or comply with other ADEM, Federal, State, or local government permits, certifications, licenses, or other approvals.

f. The discharge of a pollutant from a point source not specifically identified in the permit application for this Permit and not specifically included in the description of an outfall in this Permit is not authorized and shall constitute noncompliance with this Permit.

g. The Permittee shall take all reasonable steps, including cessation of production or other activities, to minimize or prevent any violation of this Permit or to minimize or prevent any adverse impact of any permit violation.

**2. Change in Discharge**

a. The Permittee shall apply for a permit modification at least 180 days in advance of any facility expansion, production increase, process change, or other action that could result in the discharge of additional pollutants, increase the quantity of a discharged pollutant, or that could result in an additional discharge point. This requirement also applies to pollutants that are not subject to discharge limitations in this Permit. No new or increased discharge may begin until the Director has authorized it by issuance of a permit modification or a reissued permit.

b. The Permittee shall notify the Director as soon as it is known or there is reason to believe:

1. That any activity has occurred or will occur which would result in the discharge on a routine or frequent basis, of any toxic pollutant which is not limited in this Permit, if that discharge will exceed the highest of the following notification levels:

a. one hundred micrograms per liter;

b. two hundred micrograms per liter for acrolein and acrylonitrile; five hundred micrograms per liter for 2,4-dinitrophenol and for 2-methyl-4,6-dini-trophenol; and one milligram per liter for antimony;

c. five times the maximum concentration value reported for that pollutant in the permit application; or

2. That any activity has occurred or will occur which would result in any discharge, on a non-routine or infrequent basis, of a toxic pollutant which is not limited in the Permit, if that discharge will exceed the highest of the following notification levels:

a. five hundred micrograms per liter;

b. one milligram per liter for antimony;

c. ten times the maximum concentration value reported for that pollutant in the permit application.

c. The Permittee shall notify the Director as soon as it knows or has reason to believe that it has begun or expects to begin to discharge any pollutant listed as a toxic pollutant pursuant to Section 307(a) of the FWPCA, 33 U.S.C. §1317(a), any substance designated as a hazardous substance pursuant to Section 311(b)(2) of the FWPCA, 33 U.S.C. §1321(b)(2), any waste listed as a hazardous waste pursuant to Code of Alabama 1975,

§22-30-10, or any other pollutants or other wastes which is not subject to any discharge limitations specified in Part I.A. of this Permit and was not reported in the Permittee's application, was reported in the Permittee's application in concentrations or mass rates lower than that which the Permittee expects to begin to be discharged, or has reason to believe has begun to be discharged.

3. **Compliance with Toxic or Other Pollutant Effluent Standard or Prohibition**

If any applicable effluent standard or prohibition (including any schedule of compliance specified in such effluent standard or prohibition) is established under Sections 301(b)(2)(C),(D),(E) and (F) of the FWPCA, 33 U.S.C. §1311(b)(2)(C),(D),(E), and (F); 304(b)(2) of the FWPCA, 33 U.S.C. §1314(b)(2); or 307(a) of the FWPCA, 33 U.S.C. §1317(a), for a toxic or other pollutant discharged by the Permittee, and such standard or prohibition is more stringent than any discharge limitation on the pollutant specified in Part I.A. of this Permit or controls a pollutant not limited in Part I.A. of this Permit, this Permit shall be modified to conform to the toxic or other pollutant effluent standard or prohibition and the Permittee shall be notified of such modification. If this Permit has not been modified to conform to the toxic or other pollutant effluent standard or prohibition before the effective date of such standard or prohibition, the authorization to discharge in this Permit shall be void to the extent that any discharge limitation of such pollutant in Part I.A. of this Permit exceeds or is inconsistent with the established toxic or other pollutant effluent standard or prohibition.

4. **Compliance with Water Quality Standards and Other Provisions**

a. On the basis of the Permittee's application, plans, or other available information, the Department has determined that compliance with the terms and conditions of this Permit will assure compliance with applicable water quality standards. However, this Permit does not relieve the Permittee from compliance with applicable State water quality standards established in ADEM Admin. Code ch. 335-6-10, and does not preclude the Department from taking action as appropriate to address the potential for contravention of applicable State water quality standards which could result from discharges of pollutants from the permitted facility.

b. Compliance with Permit terms and conditions notwithstanding, if the Permittee's discharge(s) from point source(s) identified on Page 1 of this Permit cause(s) or contribute(s) to a condition in contravention of State water quality standards, the Department may require abatement action to be taken by the Permittee, modify the Permit pursuant to the Department's rules and regulations, or both.

c. If the Department determines, on the basis of a notice provided pursuant to Part II.D.2. of this Permit or any investigation, inspection, or sampling, that a modification of this Permit is necessary to assure maintenance of water quality standards or compliance with other provisions of the AWPCA or FWPCA, the Department may require such modification and, in cases of emergency, the Director may prohibit the noticed act until the Permit has been modified.

5. **Compliance with Statutes and Rules**

a. This Permit has been issued under ADEM Admin. Code div. 335-6. All provisions of this division, that are applicable to this Permit, are hereby made a part of this Permit. A copy of this division may be obtained for a small charge from the Office of General Counsel, Alabama Department of Environmental Management, 1400 Coliseum Blvd., Montgomery, AL 36110-2059.

b. This Permit does not authorize the noncompliance with or violation of any Laws of the State of Alabama or the United States of America or any regulations or rules

implementing such laws. FWPCA, 33 U.S.C. Section 1319, and Code of Alabama 1975, Section 22-22-14.

6. **Right of Entry and Inspection**

The Permittee shall allow the Director, or an authorized representative, upon the presentation of credentials and other documents as may be required by law to:

a. Enter upon the Permittee's premises where a regulated facility or activity is located or conducted, or where records must be kept under the conditions of the Permit;

b. Have access to and copy, at reasonable times, any records that must be kept under the conditions of this Permit;

c. Inspect at reasonable times any facilities, equipment (including monitoring and control equipment), practices, or operations regulated or required under this Permit; and

d. Sample or monitor at reasonable times, for the purposes of assuring Permit compliance or as otherwise authorized by the AWPCA, any substances or parameters at any location.

7. **Duty to Reapply or Notify of Intent to Cease Discharge**

a. If the Permittee intends to continue to discharge beyond the expiration date of this Permit, the Permittee shall file with the Department a complete permit application for reissuance of this Permit at least 180 days prior to its expiration.

b. If the Permittee does not desire to continue the discharge(s) allowed by this Permit, the Permittee shall notify the Department at least 180 days prior to expiration of this Permit of the Permittee's intention not to request reissuance of this Permit. This notification must be signed by an individual meeting the signatory requirements for a permit application as set forth in ADEM Admin. Code r. 335-6-6-.09.

c. Failure of the Permittee to submit to the Department a complete application for reissuance of this Permit at least 180 days prior to the expiration date of this Permit will void the automatic continuation of this Permit as provided by ADEM Admin. Code r. 335-6-6-.06, and should this Permit not be reissued for any reason, any discharge after the expiration of this Permit will be an unpermitted discharge.

# PART III ADDITIONAL REQUIREMENTS, CONDITIONS, AND LIMITATIONS

## A. CIVIL AND CRIMINAL LIABILITY

### 1. Tampering

Any person who falsifies, tampers with, or knowingly renders inaccurate any monitoring device or method required to be maintained or performed under this Permit shall, upon conviction, be subject to penalties and/or imprisonment as provided by the AWPCA and/or the AEMA.

### 2. False Statements

Any person who knowingly makes any false statement, representation, or certification in any record or other document submitted or required to be maintained under this Permit, including monitoring reports or reports of compliance or noncompliance shall, upon conviction, be subject to penalties and/or imprisonment as provided by the AWPCA and/or the AEMA.

### 3. Permit Enforcement

This NPDES Permit is a Permit for the purpose of the AWPCA, the AEMA, and the FWPCA, and as such all terms, conditions, or limitations of this Permit are enforceable under State and Federal law.

### 4. Relief From Liability

Except as provided in Part II.B.1. (Bypass) and Part II.B.2. (Upset), nothing in this Permit shall be construed to relieve the Permittee of civil or criminal liability under the AWPCA, AEMA, or FWPCA for noncompliance with any term or condition of this Permit.

## B. OIL AND HAZARDOUS SUBSTANCE LIABILITY

Nothing in this Permit shall be construed to preclude the institution of any legal action or relieve the Permittee from any responsibilities, liabilities, or penalties to which the Permittee is or may be subject to under Section 311 of the FWPCA, 33 U.S.C. §1321.

## C. AVAILABILITY OF REPORTS

Except for data determined to be confidential under Code of Alabama 1975, §22-22-9(c), all reports prepared in accordance with the terms of this Permit shall be available for public inspection at the offices of the Department. Effluent data shall not be considered confidential. Knowingly making any false statement in any such report may result in the imposition of criminal penalties as provided for in Section 309 of the FWPCA, 33 U.S.C. §1319, and Code of Alabama 1975, §22-22-14.

## D. DEFINITIONS

1. Alabama Environmental Management Act (AEMA) - means Code of Alabama 1975, §§22-22A-1 et. seq., as amended.

2. Alabama Water Pollution Control Act (AWPCA) - means Code of Alabama 1975, §§22-22-1 et. seq., as amended.

3. Average monthly discharge limitation - means the highest allowable average of "daily discharges" over a calendar month, calculated as the sum of all "daily discharges" measured during a calendar month divided by the number of "daily discharges" measured during that month (zero discharge days shall not be included in the number of "daily discharges" measured and a less than detectable test result shall be treated as a concentration of zero if the most sensitive EPA approved method was used).

4. Arithmetic Mean - means the summation of the individual values of any set of values divided by the number of individual values.

5. Bypass - means the intentional diversion of waste streams from any portion of a treatment facility.

6. Daily discharge - means the discharge of a pollutant measured during any consecutive 24-hour period in accordance with the sample type and analytical methodology specified by the discharge permit.

7. Daily maximum - means the highest value of any individual sample result obtained during a day.

8. Daily minimum - means the lowest value of any individual sample result obtained during a day.

9. Day - means any consecutive 24-hour period.

10. Department - means the Alabama Department of Environmental Management.

11. Director - means the Director of the Department or his authorized representative or designee.

12. Discharge - means "[t]he addition, introduction, leaking, spilling or emitting of any sewage, industrial waste, pollutant or other waste into waters of the state." Code of Alabama 1975, §22-22-1(b)(8).

13. Discharge monitoring report (DMR) - means the form approved by the Director to accomplish monitoring report requirements of an NPDES permit.

14. 8HC - means 8-hour composite sample, including any of the following:

    a. The mixing of at least 5 equal volume samples collected at constant time intervals of not more than 2 hours over a period of not less than 8 hours between the hours of 6:00 a.m. and 6:00 p.m. If the sampling period exceeds 8 hours, sampling may be conducted beyond the 6:00 a.m. to 6:00 p.m. period.

    b. A sample continuously collected at a constant rate over period of not less than 8 hours between the hours of 6:00 a.m. and 6:00 p.m. If the sampling period exceeds 8 hours, sampling may be conducted beyond the 6:00 a.m. to 6:00 p.m. period.

15. EPA - means the United States Environmental Protection Agency.

16. Federal Water Pollution Control Act (FWPCA) - means 33 U.S.C. §§1251 et. seq., as amended.

17. Flow - means the total volume of discharge in a 24-hour period.

18. Grab Sample - means a single influent or effluent portion which is not a composite sample. The sample(s) shall be collected at the period(s) most representative of the discharge.

19. mg/L - means milligrams per liter of discharge.

20. MGD - means million gallons per day.

21. Mixing Zone - that portion of the receiving waters where mixture of effluents and natural waters take place. Mixing zones must meet the requirements of ADEM Admin. Code r. 335-6-6-.15(10).

22. Monthly Average - means, other than for E. coli bacteria, the arithmetic mean of all the composite or grab samples taken for the daily discharges collected in one month period. The monthly average for E. coli bacteria is the geometric mean of daily discharge samples collected in a one month period. The monthly average for flow is the arithmetic mean of all flow measurements taken in a one month period. (Zero discharges shall not be included in the calculation of monthly averages.)

23. New Source - means any building, structure, facility, or installation from which there is or may be a discharge of pollutants, the construction of which commenced:

    a. After promulgation of standards of performance under Section 306 of FWPCA which are applicable to such source; or

    b. After proposal of standards of performance in accordance with Section 306 of the FWPCA which are applicable to such source, but only if the standards are promulgated in accordance with Section 206 within 120 days of their proposal.

24. Permit application - means forms and additional information that are required by ADEM Admin. Code r. 335-6-6-.08 and applicable permit fees.

25. Point Source - means "any discernible, confined and discrete conveyance, including but not limited to any pipe, channel, ditch, tunnel, conduit, well, discrete fissure, container, rolling stock, concentrated animal feeding operation, or vessel or other floating craft from which pollutants are or may be discharged." Section 502(14) of the FWPCA, 33 U.S.C. §1362(14).

26. Pollutant - includes for purposes of this Permit, but is not limited to, those pollutants specified in Code of Alabama 1975, §22-22-1(b)(3) and those effluent characteristics, excluding flow, specified in Part I.A. of this Permit.

27. Pollutant of Concern - means those pollutants for which a water body is listed as impaired or which contribute to the listed impairment.

28. Process Wastewater – means any discharge(s) of water other than stormwater discharges.

29. Produced Water – means all water produced from the dewatering of coal and related seams, not to include flowback from fracturing and cement returns.

30. Receiving Stream - means the "waters" receiving a "discharge" from a "point source".

31. Severe property damage - means substantial physical damage to property, damage to the treatment facilities which causes them to become inoperable, or substantial and permanent loss of natural resources which can reasonably be expected to occur in the absence of a bypass. Severe property damage does not mean economic loss caused by delays in production.

32. Stimulation - means any process used to clean a well bore, enlarge channels, increase permeability or increase pore spaces in a formation, thus making it possible for formation fluids to move more rapidly and greater distances through the formation, and may include surging, jetting, acidizing, or fracturing.

33. Stimulation fluids - means all fluids used for and associated with the stimulation of coal seams.

34. Stormwater discharges - means any discharges related to storm events or snow melt.

35. Treatment facility and treatment system - means all structures which contain, convey, and as necessary, chemically or physically treat coalbed methane extraction operations process wastewater, produced wastewater, or drainage from associated areas, which remove pollutants limited by this Permit from such drainage or wastewater. This includes all pipes, channels, ponds, tanks, and all other equipment serving such structures.

36. 24 Hour Composite - means a 24-hour composite sample, including any of the following:

    a. The mixing of at least 12 equal volume samples collected at constant time intervals of not more than 2 hours over a period of 24 hours;

    b. A sample collected over a consecutive 24-hour period using an automatic sampler composite to one sample. As a minimum, samples shall be collected hourly and each shall be no more than one twenty-fourth (1/24) of the total sample volume collected; or

    c. A sample collected over a consecutive 24-hour period using an automatic composite sampler composited proportional to flow.

37. Upset - means an exceptional incident in which there is an unintentional and temporary noncompliance with technology-based permit discharge limitations because of factors beyond the control of the Permittee. An upset does not include noncompliance to the extent caused by operational error, improperly designed treatment facilities, inadequate facilities, lack of preventive maintenance, or careless or improper operation.

38. Waters - means "[a]ll waters of any river, stream, watercourse, pond, lake, coastal, ground or surface water, wholly or partially within the State, natural or artificial. This does not include waters which are entirely confined and retained completely upon the property of a single individual, partnership, or corporation unless such waters are used in interstate commerce." Code of Alabama 1975, §22-22-1(b)(2). "Waters" include all "navigable waters" as defined in §502(7) of the FWPCA, 33 U.S.C. §1362(7), which are within the State of Alabama.

39. Week - means the period beginning at twelve midnight Saturday and ending at twelve midnight the following Saturday.

40. Weekly (7-day and calendar week) Average - the arithmetic mean of all samples collected during a consecutive 7-day period or calendar week, whichever is applicable. The calendar week is defined as beginning on Sunday and ending on Saturday. Weekly averages shall be calculated for all calendar weeks with Saturdays in the month. If a calendar week overlaps two months (i.e., the Sunday is in one month and the Saturday in the following month), the weekly average calculated for the calendar week shall be included in the data for the month that contains the Saturday.

41. Zone of Initial Dilution (ZID) - the area extending from the port openings of a high rate diffuser to the initial edge of the mixing zone where, due to great turbulence, a constant instream waste concentration (IWC) cannot be determined. A ZID must meet the requirements of ADEM Admin. Code r. 335-6-6-.02(ggg)

## E. SEVERABILITY

The provisions of this Permit are severable, and if any provision of this Permit or the application of any provision of this Permit to any circumstance is held invalid, the application of such provision to other circumstances, and the remainder of this Permit, shall not be affected thereby.

## F. PROHIBITIONS AND ACTIVIES NOT AUTHORIZED

1. Discharges from disposal or landfill activities as described in ADEM Admin. Code div. 335-13 are not authorized by this Permit unless specifically approved by the Department.

2. Relocation, diversion, or other alteration of a water of the State is not authorized by this Permit unless specifically approved by the Department.

3. The discharge of wastewater, generated by any process, facility, or by any other means not under the operational control of the Permittee or not identified in the application for this Permit or not identified specifically in the description of an outfall in this Permit is not authorized by this Permit.

4. Discharges of stormwater, process water, produced water, other wastewaters, or other pollutants from exploration, development, production, closure, and associated activities, of hydrocarbons from sources other than coal seams (e.g., conventional oil and natural gas operations) are not authorized by this Permit unless specifically approved in writing by the Director. The Permittee shall submit documentation and must receive approval from the Department prior to inclusion, under this Permit discharges of stormwater, process water, and other wastewaters from any well that has been, or will be converted from conventional oil and gas exploration or other hydrocarbon development, or production operations to coalbed methane operations

# PART IV SPECIAL REQUIREMENTS, RESTRICTIONS, AND LIMITATIONS

## A. DISCHARGES TO IMPAIRED WATERS

1. This Permit does not authorize new sources or new discharges of pollutants of concern to impaired waters unless consistent with an EPA-approved or EPA-established Total Maximum Daily Load (TMDL) and applicable State law. Impaired waters are those that do not meet applicable water quality standards and are identified on the State of Alabama's §303(d) list or on an EPA-approved or EPA-established TMDL. Pollutants of concern are those pollutants for which the receiving water is listed as impaired or contribute to the listed impairment.

2. Facilities that discharge into a receiving stream which is listed on the State of Alabama's §303(d) list of impaired waters, and with discharges that contain the pollutant(s) for which the waters are impaired, must within six (6) months of the Final §303(d) list approval, document in its BMP plan how the BMPs will control the discharge of the pollutant(s) of concern, and must ensure that there will be no increase of the pollutants of concern. A monitoring plan to assess the effectiveness of the BMPs in achieving the allocations must also be included in the BMP plan.

3. If the facility discharges to impaired waters as described above, it must determine whether a TMDL has been developed and approved or established by EPA for the listed waters. If a TMDL is approved or established during this Permit cycle by EPA for any waters into which the facility discharges, the facility must review the applicable TMDL to see if it includes requirements for control of any water discharged by the Permittee. Within six (6) months of the date of TMDL approval or establishment, the facility must notify the Department on how it will modify its BMP plan to include best management practices specifically targeted to achieve the allocations prescribed by the TMDL, if necessary. Any revised BMP plans must be submitted to the Department for review. The facility must include in the BMP plan a monitoring component to assess the effectiveness of the BMPs in achieving the allocations.

## B. EFFLUENT TOXICITY LIMITATIONS AND BIOMONITORING REQUIREMENTS FOR ACUTE TOXICITY

Except as provided below, the Permittee shall perform 48-hour acute toxicity screening tests on the discharges required to be tested for acute toxicity in Part I.A. of this Permit.

In addition to the frequency specified in Part I.A. of this Permit, acute toxicity screening tests shall be performed in conjunction with the discharge of each new formulation of stimulation fluid that is discharged through any outfall(s). The testing in conjunction with the discharge of stimulation fluid may coincide with the regularly required testing.

1. **Test Requirements**

   a. The tests shall be performed using effluent diluted, using appropriate control water, to the Instream Waste Concentration (IWC) which is 5% effluent for Outfall 001.

   b. Any test where survival in the effluent concentration is less than 90% and statistically lower than the control indicates acute toxicity and constitutes noncompliance with this Permit.

2. **General Test Requirements**

   a. A 24 hour composite sample shall be obtained for use in the above biomonitoring tests. The holding time for each sample shall not exceed 36 hours. The control water shall be a water prepared in the laboratory in accordance with the EPA procedure described in EPA

821-R-02-012 or most current edition or another control water selected by the Permittee and approved by the Department.

b. Effluent toxicity tests in which the control survival is less than 90% or in which the other requirements of the EPA Test Procedure are not met shall be unacceptable and the Permittee shall rerun the tests as soon as practical within the monitoring period.

c. In the event of an invalid test, upon subsequent completion of a valid test, the results of all tests, valid and invalid, are reported with an explanation of the tests performed and results.

d. Should results from four consecutive testing periods indicate that effluent from a point source identified on Page 1 of this Permit does not exhibit acute toxicity, the Permittee may request that the toxicity testing frequency be reduced to semiannual. A reduction in toxicity testing frequency will be allowed only if approved by the Department in writing. The required toxicity testing frequency will revert back to once per quarter under the following conditions:

(1) If effluent from a point source identified on Page 1 of this Permit continues to exhibit acute toxicity in any of the four (4) additional acute toxicity tests following the initial indication of acute toxicity as specified in Part IV.B.4., unless waived in writing by the Department; and

(2) If the characteristics of the effluent from a point source identified on Page 1 of this Permit changes significantly from the effluent which was discharging when the reduction in frequency was approved. Such changes in characteristics may include, but are not limited to, changes in stimulation fluids.

**3. Reporting Requirements**

a. The Permittee shall notify the Department in writing within 48 hours after toxicity has been demonstrated by the scheduled test(s).

b. Biomonitoring test results obtained during each monitoring period shall be summarized and reported using the appropriate Discharge Monitoring Report (DMR) form approved by the Department. An effluent toxicity report containing the information in Part IV.B.6. shall be included with the DMR. Two copies of the test results must be submitted to the Department no later than 28 days after the month in which the tests were performed.

**4. Additional Testing Requirements**

a. If acute toxicity is indicated (noncompliance with permit limit), the Permittee shall perform four (4) additional valid acute toxicity tests in accordance with these procedures. The toxicity tests shall be performed once per week and shall be performed during the first four calendar weeks after becoming aware of the acute toxicity. The results of these tests shall be submitted no later than 28 days following the month in which the tests were performed. Additional testing sample collection and analysis timeframes may be extended, as necessary, to obtain the samples during discharges.

b. After evaluation of the results of the additional tests, the Department will determine if additional action is appropriate and may require additional testing and/or toxicity reduction measures. The Permittee may be required to perform a Toxicity Identification Evaluation (TIE) and/or a Toxicity Reduction Evaluation (TRE). The TIE/TRE shall be performed in accordance with the most recent protocols/guidance outlined by EPA (e.g., EPA/600/2-88/062, EPA/600/R-92/080, EPA/600/R-92/081, EPA/833/B-99/022 and/or EPA/600/6-91/005F, etc.).

**5. Test Methods**

The tests shall be performed in accordance with the latest edition of the "EPA Methods for Measuring the Acute Toxicity of Effluents to Freshwater and Marine Organisms" and shall be performed using the fathead minnow (*Pimephales promelas*) and the cladoceran (*Ceriodaphnia dubia*).

**6. Effluent Toxicity Testing Reports**

The following information shall be submitted with each discharge monitoring report unless otherwise directed by the Department. The Department may at any time suspend or reinstate this requirement or may increase or decrease the frequency of submittals.

a. Introduction

(1) Facility Name, location and county

(2) Permit number

(3) Toxicity testing requirements of permit

(4) Name of receiving water body

(5) Contract laboratory information (if tests are performed under contract)

(i) Name of firm

(ii) Telephone number

(iii) Address

(6) Objective of test

b. Plant Operations

(1) Discharge operating schedule (if other than continuous)

(2) Volume of discharge during sample collection to include Mean daily discharge on sample collection date (MGD, CFS, GPM)

c. Source of Effluent and Dilution Water

(1) Effluent samples

(i) Sampling point

(ii) Sample collection date(s) and time(s)

(iii) Sample collection method

(iv) Physical and chemical data of undiluted effluent samples (water temperature, pH, alkalinity, hardness, specific conductance, total residual chlorine (if applicable), etc.)

(v) Sample temperature when received at the laboratory

(vi) Lapsed time from sample collection to delivery

(vii) Lapsed time from sample collection to test initiation

(2) Dilution Water samples

(i) Source

(ii) Collection date(s) and time(s) (where applicable)

(iii) Pretreatment (if applicable)

(iv) Physical and chemical characteristics (pH, hardness, water temperature, alkalinity, specific conductivity, etc.)

d. Test Conditions

(1) Toxicity test method utilized

(2) End point(s) of test

(3) Deviations from referenced method, if any, and reason(s)

(4) Date and time test started

(5) Date and time test terminated

(6) Type and volume of test chambers

(7) Volume of solution per chamber

(8) Number of organisms per test chamber

(9) Number of replicate test chambers per treatment

(10) Test temperature, pH and dissolved oxygen as recommended by the method (to include ranges)

(11) Feeding frequency, and amount and type of food

(12) Light intensity (mean)

e. Test Organisms

(1) Scientific name

(2) Life stage and age

(3) Source

(4) Disease treatment (if applicable)

f. Quality Assurance

(1) Reference toxicant utilized and source

(2) Date and time of most recent acute reference toxicant test(s), raw data, and current cusum chart(s)

(3) Dilution water utilized in reference toxicant test

(4) Results of reference toxicant test(s) (LC50, etc.), report concentration-response relationship and evaluate test sensitivity. The most recent reference toxicant test shall be conducted within 30-days of the routine.

(5) Physical and chemical methods utilized

g. Results

(1) Provide raw toxicity data in tabular form, including daily records of affected organisms in each concentration (including controls) and replicate

(2) Provide table of endpoints: LC50, NOAEC, Pass/Fail (as required in the applicable NPDES permit)

(3) Indicate statistical methods used to calculate endpoints

(4) Provide all physical and chemical data required by method

(5) Results of test(s) (LC50, NOAEC, Pass/Fail, etc.), report concentration-response relationship (definitive test only), report percent minimum significant difference (PMSD)

h. Conclusions and Recommendations

(1) Relationship between test endpoints and permit limits

(2) Action to be taken

**ALABAMA DEPARTMENT OF ENVIRONMENTAL MANAGEMENT**
**WATER DIVISION**

**NPDES INDIVIDUAL PERMIT RATIONALE**

| | |
|---|---|
| **Company Name:** | **PGP Operating, LLC** |
| **Facility Name:** | **Maxwell Crossing** |
| **County:** | **Tuscaloosa** |
| **Permit Number:** | **AL0056791** |
| **Prepared by:** | **Jasmine White** |
| **Date:** | **March 6, 2020** |
| **Receiving Waters:** | **Black Warrior River** |
| **Permit Coverage:** | **Coalbed Methane Exploration, Production, and Associated Areas** |
| **SIC Code:** | **1311** |

The Department has made a tentative determination that the available information is adequate to support reissuance of this permit.

This proposed permit covers produced water and stormwater discharges from coalbed methane exploration, production, and associated areas.

This proposed permit authorizes treated discharges into a stream segment, other State water, or local watershed that currently has a water quality classification of Fish and Wildlife (F&W) (ADEM Admin. Code r. 335-6-10-.09).

Full compliance with the proposed permit terms and conditions is expected to be protective of instream water quality and ensure consistency with applicable instream State water quality standards for the receiving stream.

The instream water quality standards for pH in streams classified as F&W is 6.0 – 8.5 s.u. per ADEM Admin. Code r. 335-6-10-.09. A discharge limitation for pH of 9.0 s.u. is imposed in this permit because the IWC indicates that enough dilution is considered to be available in-stream to allow for a discharge at 9.0 s.u. without endangering water quality. However, the discharge shall not be allowed to cause the in-stream pH to deviate more than 1.0 s.u. from the normal or natural pH, nor be less than 6.0 s.u., nor greater than 8.5 s.u.

The Instream Waste Concentration (IWC) at the Zone of Initial Dilution (ZID) is 4.7% (rounded to 5%) for Outfall 001-1. This IWC was calculated through a CORMIX model conducted by CFM Group, LLC on behalf of the Permittee and reviewed by the Department's Water Quality Branch in 2014.

Total iron and total manganese limitations are based on Best Professional Judgment (BPJ). These limitations have been used in previous permits and are believed to be adequate to protect water quality. The oil and grease daily maximum limit of 15 mg/L has been shown to provide a reasonable assurance of compliance with ADEM Admin. Code r. 335-6-10-.06(b) which says "State waters shall be free from floating debris, oil...."

The Department's experience with existing discharges on receiving streams with greater than 100:1 dilution has shown that acute toxicity requirements are more stringent than chronic requirements. This permit proposes discharges from Outfall 001-1 with a flow rate of 0.0705 cfs to a receiving stream with a $7Q_{10}$ of 201.94 cfs, resulting in greater than 100:1 dilution. Therefore, acute toxicity testing with two species (Ceriodaphnia dubia and Pimephales promelas) is required using effluent diluted to the IWC at the perimeter of the ZID (ADEM Admin. Code r. 335-6-6-.15(10)(a)). The acute toxicity testing is required once per quarter unless four consecutive quarters have shown no toxicity, the Permittee has requested a reduction in frequency of testing, and the Department has

approved such request. If approved, the frequency of testing shall be semi-annually. In addition, Part IV.B. of the permit requires the Permittee to conduct toxicity testing in conjunction with the discharge of any new stimulation fluids into the waste stream.

Effluent and instream monitoring for dissolved chlorides and instream monitoring for specific conductance will continue be required in order to develop permit limitations in the future if needed to protect water quality.

The applicant has submitted, in accordance with 40 CFR Part 122.21 and their NPDES permit application, a representative effluent and background stream data for metals, cyanide, and total phenols for Outfall 001-1 as part of this application. The Department completed a reasonable potential analysis (RPA) of the discharge to determine whether or not pollutants in the treated effluent have the potential to contribute to excursions of Alabama's in-stream water quality standards, based on the analytical data submitted by the Permittee for Outfall 001. The RPA indicates that there was no reasonable potential for in-stream water quality standards to be exceeded. The Department has also reviewed available data in ALAWADR, ADEM's water quality database, and found nothing to contradict the data submitted by the applicant.

If there is a reasonable potential that a pollutant present in the treated discharges from a facility could cause or contribute to a contravention of applicable State water quality standards above numeric or narrative criteria, 40 CFR §122 requires the Department to establish effluent limits using calculated water quality criterion, establish effluent limits on a case-by-case basis using criteria established by EPA, or establish effluent limits based on an indicator parameter. Based on available information, potential pollutants discharged from this facility, if discharged within the concentrations allowed by this permit, would not have a reasonable potential to cause or contribute to a contravention of applicable State water quality standards.

Pursuant to ADEM Admin. Code r. 335-6-6-.12(r) this Permit requires the Permittee to prepare, implement, and maintain a Spill Prevention Control and Countermeasures (SPCC) plan for all stored chemicals, fuels and/or stored pollutants that have the potential to discharge to a water of the State. This plan must meet the minimum engineering requirements as defined in 40 CFR Part 112 and must provide for secondary containment adequate to control a potential spill.

A Best Management Practices (BMP) Plan is required for the control of all nonpoint sources of pollution from all areas that are or may be associated with the Permittee's operations. This plan must be based on best available technology and include, but not be limited to, containment of process liquids and solids such that these do not present a potential for discharge; stormwater runoff associated with wellpad construction and maintenance; roads, borrow pits, and dirt or other material stockpiles; and water, wastewater, and other fluids acquisition operations that may be associated with the Permittee's operations. The Permittee is required to inspect a minimum of 4% of its facilities each month to ensure that their BMPs are effective in minimizing pollutants in stormwater runoff and are adequate for compliance with State water quality standards.

The applicant is not proposing discharges of pollutants to a water of the State with an approved Total Maximum Daily Load (TMDL).

The applicant is not proposing discharges into a stream segment or other State water that is included on Alabama's current CWA §303(d) list.

The applicant is not proposing new discharges of pollutant(s) to an ADEM identified Tier I water.

The proposed permit does not authorize new or increased discharges of pollutants to a Tier II water. Therefore, the Antidegradation Policy (ADEM Admin. Code 335-6-10-.04) does not apply to this permit.

Facility Name: PGP Operating, LLC - Maxwell Crossing

NPDES No.: AL0056791 Outfall 001-1[1,2,3,4]

| Freshwater F&W classification. | | | | Freshwater Acute (µg/l) $Q_s$ =1Q10 | | | | | | Freshwater Chronic (µg/l) $Q_s$ = 7Q10 | | | | | | Human Health Consumption Fish only (µg/l) Carcinogen $Q_s$ = Annual Average Non-Carcinogen $Q_s$ = 7Q10 | | | |
|---|---|---|---|---|---|---|---|---|---|---|---|---|---|---|---|---|---|---|---|
| ID | Pollutant | RP? | Carcinogen yes | Background Instream (Cs) Daily Max | Max Daily Discharge as reported by Applicant[4] ($C_{dmax}$) | Water Quality Criteria ($C_r$) | Draft Permit Limit ($C_{dmax}$) | 20% of Draft Permit Limit | RP? | Background Instream (Cs) Monthly Ave | Avg Daily Discharge as reported by Applicant ($C_{davg}$)[4] | Water Quality Criteria ($C_r$) | Draft Permit Limit ($C_{davg}$) | 20% of Draft Permit Limit | RP? | Water Quality Criteria ($C_r$) | Draft Permit Limit ($C_{davg}$) | 20% of Draft Permit Limit | RP? |
| 1 | Antimony | | | 0 | 0 | - | - | - | - | 0 | 0 | - | - | - | - | 3.73E+02 | 6.92E+05 | 1.38E+05 | No |
| 2 | Arsenic | | YES | 0 | 0 | 340.000 | 472423.497 | 94484.699 | No | 0 | 0 | 150.000 | 277846.175 | 55569.235 | No | 3.03E-01 | 2.36E+04 | 4.72E+03 | No |
| 3 | Beryllium | | | 0 | 0 | - | - | - | - | 0 | 0 | - | - | - | - | - | - | - | - |
| 4 | Cadmium | | | 0 | 0 | 2.014 | 2798.037 | 559.607 | No | 0 | 0 | 0.246 | 455.661 | 91.132 | No | - | - | - | - |
| 5 | Chromium/ Chromium III | | | 0 | 0 | 569.763 | 791675.449 | 158335.090 | No | 0 | 0 | 74.115 | 137282.910 | 27456.582 | No | - | - | - | - |
| 6 | Chromium/ Chromium VI | | | 0 | 0 | 16.000 | 22231.694 | 4446.339 | No | 0 | 0 | 11.000 | 20375.386 | 4075.077 | No | - | - | - | - |
| 7 | Copper | | | 0 | 0 | 13.439 | 18673.391 | 3734.678 | No | 0 | 0 | 8.956 | 16588.808 | 3317.762 | No | 1.30E+03 | 2.41E+06 | 4.82E+05 | No |
| 8 | Lead | | | 0 | 1.4 | 64.581 | 89734.594 | 17946.919 | No | 0 | 1.4 | 2.517 | 4661.599 | 932.320 | No | - | - | - | - |
| 9 | Mercury | | | 0 | 0 | 2.400 | 3334.754 | 666.951 | No | 0 | 0 | 0.012 | 22.228 | 4.446 | No | 4.24E-02 | 7.86E+01 | 1.57E+01 | No |
| 10 | Nickel | | | 0 | 0 | 468.236 | 650604.662 | 130120.932 | No | 0 | 0 | 52.007 | 96332.120 | 19266.424 | No | 9.93E+02 | 1.84E+06 | 3.68E+05 | No |
| 11 | Selenium | | | 0 | 0 | 20.000 | 27789.617 | 5557.923 | No | 0 | 0 | 5.000 | 9261.539 | 1852.308 | No | 2.43E+03 | 4.50E+06 | 9.00E+05 | No |
| 12 | Silver | | | 0 | 0 | 3.217 | 4469.623 | 893.925 | No | 0 | 0 | - | - | - | - | - | - | - | - |
| 13 | Thallium | | | 0 | 0 | - | - | - | - | 0 | 0 | - | - | - | - | 2.74E-01 | 5.07E+02 | 1.01E+02 | No |
| 14 | Zinc | | | 0 | 0 | 117.180 | 162820.000 | 32564.000 | No | 0 | 0 | 118.139 | 218829.768 | 43765.954 | No | 1.49E+04 | 2.76E+07 | 5.52E+06 | No |
| 15 | Cyanide | | | 0 | 0 | 22.000 | 30568.579 | 6113.716 | No | 0 | 0 | 5.200 | 9632.001 | 1926.400 | No | 9.33E+03 | 1.73E+07 | 3.46E+06 | No |
| 16 | Total Phenolic Compounds | | | 0 | 0 | - | - | - | - | 0 | 0 | - | - | - | - | - | - | - | - |
| 17 | Hardness (As CaCO3) | | | 0 | 0 | - | - | - | - | 0 | 0 | - | - | - | - | - | - | - | - |

[1]Outfall 001-1 discharges to the Black Warrior River. The 7Q10 for the receiving stream is 201.94 cfs. The mean annual flow is 8497.41 cfs. This is the receiving stream flow value used in the calculations.

[2]Outfall 001-1 is reported to have a design discharge flow rate of 0.0705 MGD. This is the discharge flow rate used in the calculations.

[3]A hardness of 100 mg/L was used in the calculations based information provided in the application.

[4]Discharge data for all parameters are the results of samples obtained from Outfall 001-1 at the Maxwell Crossing CBM Facility on February 15, 2019. Instream data is the result of a sample obtained from the Black Warrior River on February 15, 2019.

LANCE R. LEFLEUR
DIRECTOR

ADEM

ROBERT J. BENTLE
GOVERNO

Alabama Department of Environmental Management
adem.alabama.gov
1400 Coliseum Blvd. 36110-2400 ▪ Post Office Box 301463
Montgomery, Alabama 36130-1463
(334) 271-7700 ▪ FAX (334) 271-7950

May 28, 2014

**MEMORANDUM**

TO: Mining and Natural Resources Section

FROM: Taylor Griswell, WQ

RE: CORMIX Modeling Review for PGP Operating, LLC – Maxwell Crossing Outfall 001

The Water Quality Branch has performed a CORMIX modeling review for PGP Operating – Maxwell Crossing, Outfall 001. This facility is formerly known as Energen Resources Corporation – Maxwell Crossing, Outfall 001. It changed owners during the CORMIX review process. This facility discharges to the Black Warrior River with a modeled effluent flow rate of 0.0705 MGD.

A limiting dilution of 2575 : 1 was calculated using the design effluent flow rate of 0.0705 MGD and a Black Warrior $7Q_{10}$ value of 280.7 cfs. Therefore, based upon the established ADEM protocol for Whole Effluent Toxicity (WET) determination, acute toxicity using the $1Q_{10}$ flow applicable at the edge of the Zone of Initial Dilution (ZID) will be employed for the review. The applicable distance to the edge of the ZID is 2.25 meters (7.39 feet), based upon the criterion stating the ZID is equal to *50 times the discharge length scale (DLS), applicable in any spatial direction.*

The existing Maxwell Crossing, Outfall 001 discharge structure is a standard multiport diffuser where the ports are oriented perpendicular to the manifold and are pointed upward at a 90° vertical angle. The diffuser is 216.1 ft (65.9 m) long with 12 ports with equal spacing of the ports assumed. Based upon the modeling efforts of CFM Group, LLC, the current outfall design, when modeled, meets client desired IWC and no modifications will be needed.

An IWC of 4.7% was predicted at the edge of the ZID. This value is identical to the IWC calculated by CFM Group, LLC. Therefore, based upon our review and the data provided, the Water Quality branch agrees with the findings from CFM Group, LLC.

**ALABAMA DEPARTMENT OF ENVIRONMENTAL MANAGEMENT (ADEM)**
**NPDES INDIVIDUAL PERMIT APPLICATION**

**COALBED METHANE OPERATIONS – EXPLORATION, DEVELOPMENT, OPERATION, CLOSURE, AND ASSOCIATED ACTIVITIES AND AREAS**

INSTRUCTIONS: COMPLETE ALL QUESTIONS. RESPOND WITH "N/A" AS APPROPRIATE. INCOMPLETE OR INCORRECT ANSWERS OR MISSING SIGNATURES WILL DELAY PROCESSING. ATTACH ADDITIONAL COMMENTS OR INFORMATION AS NEEDED. IF SPACE IS INSUFFICIENT, CONTINUE ON AN ATTACHED SHEET(S) AS NECESSARY. COMMENCEMENT OF ACTIVITIES APPLIED FOR AS DETAILED IN THIS APPLICATION ARE NOT AUTHORIZED UNTIL THE EFFECTIVE DATE OF PERMIT COVERAGE ISSUED BY THE DEPARTMENT.

PLEASE TYPE OR PRINT IN INK ONLY.

R#19-48665
$7875.00

PURPOSE OF THIS APPLICATION

☐ Initial Permit Application for New Operations ☐ Modification of Existing Permit ☑ Reissuance of Existing Permit

☐ Reissuance & Modification of Existing Permit ☐ Reissuance & Transfer of Existing Permit ☐ Other: _____

I. GENERAL INFORMATION

RECEIVED
APR 12 2019
STORM WATER MANAGEMENT BRANCH

| NPDES Permit Number (Not applicable if initial permit application): | County(s) in which Operations are Located: |
|---|---|
| *AL* 0056791 | Tuscaloosa |

| Company/Permittee Name | | | Operations Name | | |
|---|---|---|---|---|---|
| PGP Operating, LLC. | | | Maxwell Crossing | | |
| Mailing Address of Company/Permittee: | | | Physical Address of Operation (as near as possible to main entrance): | | |
| 17300 Brookwood Parkway | | | Maxwell Loop Road | | |
| City: | State: | Zip: | City: | State: | Zip: |
| Vance | Al | 35490 | Tuscaloosa | AL | 35405 |

| Permittee Phone Number | Permittee Fax Number: | Latitude and Longitude of Main Entrance: |
|---|---|---|
| 205-554-3100 | 205-553-5252 | 33°05'13.77"N -87°34'41.52"W |

| Responsible Official (as described on Page 8 of this application): | | | Responsible Official Title: | | |
|---|---|---|---|---|---|
| Scott Brasfield | | | EH&S / Facilities Supt. | | |
| Mailing Address of Responsible Official: | | | Physical Address of Responsible Official: | | |
| 17300 Brookwood Parkway | | | 17300 Brookwood Parkway | | |
| City: | State: | Zip: | City: | State: | Zip: |
| Vance | Al | 35490 | Vance | Al | 35490 |

| Phone Number of Responsible Official: | Fax Number of Responsible Official: | Email Address of Responsible Official: |
|---|---|---|
| 205-554-3127 | 205-553-5252 | sbrasfield@pgpoperating.com |

| Operations Contact: | | | Operations Contact Title: | |
|---|---|---|---|---|
| Mark Rose | | | EH&S Cord. | |
| Physical Address of Operations Contact: | | | Phone Number of Operations Contact: 205-554-3133 | Fax Number of Operations Contact: 205-553-5252 |
| 17300 Brookwood Pkwy. | | | | |
| City: | State: | Zip: | Email Address of Operations Contact: | |
| Vance | Al | 35490 | mrose@pgpoperating.com | |

II. MEMBER INFORMATION

A. Identify the name, title/position, and unless waived in writing by the Department, the resident address of every officer, general partner, LLP partner, LLC member, investor, director, or person performing a function similar to a director, of the applicant, and each person who is the record or beneficial owner of 10 percent or more of any class of voting stock of the applicant, or any other responsible official(s) of the applicant with legal or decision making responsibility or authority for the operations:

| Name | Title/Position | Physical Address of Residence (P.O. Box is Not Acceptable) |
|---|---|---|
| Susan Reeves | President | 5027 Chapel Crossing Douglasville, GA 30135 |
| Mike Frey | VP-Operations | 4369 Dunmore Rd. Marietta, GA 30068 |
| Chris Howell | VP-Finance | 3284 Standing Peach Tree Trail, GA 30152 |

B. Other than the "Company/Permittee" listed in Part I, identify the name of each corporation, partnership, association, and single proprietorship for which any individual identified in Part II.A. is or was an officer, general partner, LLP partner, LLC member, investor, director, or individual performing a function similar to a director, or principal (10% or more) stockholder, that had an Alabama NPDES permit at any time during the five year (60 month) period immediately preceding the date on which this form is signed:

| Name of Corporation, Partnership, Association, or Single Proprietorship: | Name of Individual from Part II.A.: | Title/Position in Corporation, Partnership, Association, or Single Proprietorship: |
|---|---|---|
| | | |
| | | |
| | | |

III. LEGAL STRUCTURE OF APPLICANT

A. Indicate the legal structure of the "Company/Permittee" listed in Part I:

☐ Corporation ☐ Association ☐ Individual ☐ Single Proprietorship ☐ Partnership ☐ LLP ☑ LLC

☐ Government Agency _____ ☐ Other _____

B. If not an individual or single proprietorship, is the "Company/Permittee" listed in Part I properly registered and in good standing with the Alabama Secretary of State's office. (If the answer is "No," attach a letter of explanation.) ☑ Yes ☐ No

C. Parent Corporation and Subsidiary Corporations of Applicant, if any: Public Gas Partners Inc. and PGP Gas Supply Pool No.3 LLC.

D. Land owner(s): Available on Request

E. Mining Sub-contractor(s)/Operator(s), if known: NA

IV. COMPLIANCE HISTORY

A. Has the applicant ever had any of the following:

| | Yes | No |
|---|---|---|
| (1) An Alabama NPDES, SID, or UIC permit suspended or terminated? | ☐ | ☑ |
| (2) An Alabama or federal environmental permit suspended/terminated? | ☐ | ☑ |
| (3) An Alabama State Oil & Gas Board permit or other approval suspended or terminated? | ☐ | ☑ |
| (4) An Alabama or federal performance/environmental bond, or similar security deposited in lieu of a bond, or portion thereof, forfeited? | ☐ | ☑ |

(If the response to any item of Part IV.A. is "Yes," attach a letter of explanation.)

B. Identify every Warning Letter, Notice of Violation (NOV), Administrative Action, or litigation issued to the applicant, parent corporation, subsidiary, general partner, LLP partner, or LLC Member and filed by ADEM or EPA during the three year (36 month) period preceding the date on which this form is signed. Indicate the date of issuance, briefly describe alleged violations, list actions (if any) to abate alleged violations, and indicate date of final resolution:

None

V. OTHER PERMITS/AUTHORIZATIONS

A. List any other NPDES, State Oil & Gas Board (OGB) Class II Injection wells , or other environmental permits (including permit numbers), authorizations, or certifications that have been applied for or issued within the State by ADEM, EPA, Alabama Surface Mining Commission (ASMC), Alabama Department of Industrial Relations (ADIR), or other agency, to the applicant, parent corporation, subsidiary, or LLC member for thess operations whether presently effective, expired, suspended, revoked or terminated:

Refer to Table I

B. List any other NPDES or other ADEM permits (including permit numbers), authorizations, or certifications that have been applied for or issued within the State by ADEM, EPA, OGB, ASMC, or ADIR to the applicant, parent corporation, subsidiary, or LLC member for other facilities whether presently effective, expired, suspended, revoked, or terminated:

Refer to Table II

VI. PROPOSED SCHEDULE

Anticipated Activity Commencement Date: September 3, 1985 Anticipated Activity Completion Date: 2040

VII. ACTIVITY DESCRIPTION & INFORMATION

A. Proposed Total Area of the Permitted Site: 61,440 acres Proposed Total Disturbed Area of the Permitted Site: N/A acres

B. Township(s), Range(s), Section(s): See Table III Refer to Attachment A

C. Detailed Directions to Site: Travel interstate I-20 W/I/59 to Exit #71 and go south on AL-69S then turn right on Maxwell Loop Road. Then go .5 mile to Maxwell POD on left.

D. Is/will this operation:

| | Yes | No |
|---|---|---|
| (1) an existing operation which currently results in discharges to State waters? | ☑ | ☐ |
| (2) a proposed operation which will result in a discharge to State waters? | ☐ | ☑ |
| (3) be located within any 100-year flood plain? | ☐ | ☑ |
| (4) discharge to Municipal Separate Storm Sewer? | ☐ | ☑ |
| (5) discharge to waters of or be located in the Coastal Zone? | ☐ | ☑ |
| (6) need/have ADEM UIC permit coverage? | ☐ | ☑ |
| (7) be located on Indian/historically significant lands? | ☐ | ☑ |
| (8) need/have ADEM SID permit coverage? | ☐ | ☑ |
| (9) need/have State Oil & Gas Board coverage? | ☑ | ☐ |
| (10) need/have ADIR permit coverage? | ☐ | ☑ |
| (11) generate, treat, store, or dispose of hazardous or toxic waste? (If "Yes," attach a detailed explanation.) | ☐ | ☑ |
| (12) be located in or discharge to a Public Water Supply (PWS) watershed or be located within ½ mile of any PWS well? | ☐ | ☑ |

VIII. PROPOSED ACTIVITY TO BE CONDUCTED

A. Type(s) of activity presently conducted at applicant's existing operations or proposed to be conducted at operations (check all that apply):

- ☑ CBM exploration/production (drilling, fracturing, etc.)
- ☐ Land application of temporary pit waters
- ☑ Creek/stream pipeline or road crossings
- ☐ Construction related temporary borrow pits/areas
- ☐ Onsite construction debris or equipment storage/disposal
- ☑ Grading, clearing, grubbing, etc.
- ☐ Waterbody relocation or other alteration
- ☐ Surface water withdrawal
- ☐ Conventional Oil & Gas exploration
- ☐ Gob well development
- ☑ Chemicals used in process or wastewater treatment (coagulant, biocide, etc.)
- ☐ Construction Excavation
- ☑ Reclamation of disturbed areas
- ☐ Other (describe):
- ☐ Other beneficiation/manufacturing operations. If "Yes", please describe:

B. Primary SIC Code 13 Description Oil and Gas Extraction

Secondary SIC Code(s) 1311 Description Crude Petroleum and Natural Gas

C. Narrative Description of the Activity: Extraction of Methane Gas from Coal Seams

IX. FUEL – CHEMICAL HANDLING, STORAGE & SPILL PREVENTION CONTROL & COUNTERMEASURES (SPCC) PLAN

A. Will fuels, chemicals, compounds, or liquid waste be used or stored onsite? ☑ Yes ☐ No

B. If "Yes," identify the fuel, chemicals, compounds, or liquid waste and indicate the volume of each:

| *Volume* | *Contents* | *Volume* | *Contents* | *Volume* | *Contents* |
|---|---|---|---|---|---|
| _____ gallons | Refer to Attached SPCC | _____ gallons | _____ | _____ gallons | _____ |
| _____ gallons | _____ | _____ gallons | _____ | _____ gallons | _____ |

C. If "Yes", a detailed SPCC Plan with acceptable format and content, including diagrams, must be attached to application in accordance with ADEM Admin. Code R. 335-6-6-.12(r). Unless waived in writing by the Department on a programmatic, categorical, or individual compound/chemical basis, Material Safety Data Sheets (MSDS) for chemicals/compounds used or proposed to be used at the operations must be included in the SPCC Plan submittal.

X. TOPOGRAPHIC MAP SUBMITTAL

Attach to this application a 7.5 minute series U.S.G.S. topographic map(s) or equivalent map(s) no larger than, or folded to a size of 8.5 by 11 inches (several pages may be necessary), of the area extending to at least one mile beyond property boundaries. The topographic or equivalent map(s) must include a caption indicating the name of the topographic map, name of the applicant, operations name, county, and township, range, & section(s) where the operations are located. Unless approved in advance by the Department, the topographic or equivalent map(s), at a minimum, must show:

(a) An outline of legal boundary of entire operations (property lines and lease boundaries)
(b) Compressor stations
(c) All existing and proposed disturbed areas
(d) Operations gas and water pipelines
(e) Proposed and existing discharge points
(f) Perennial, intermittent, and ephemeral streams
(g) Lakes, springs, water wells, and wetlands
(h) All known dirt/improved access roads for operations
(i) Wellpads and service roads
(j) Other information relevant to operations
(k) All surrounding unimproved/improved roads
(l) High-tension power lines and railroad tracks
(m) Buildings and structures, including fuel/water tanks
(n) Contour lines, township-range-section lines
(o) Drainage patterns, swales, washes
(p) All drainage conveyance/treatment structures (ditches, berms, etc.)
(q) Any other pertinent or significant structure/feature
(r) Location of any waste storage/disposal areas
(s) Location of operations sign showing Permittee name, operations name, and NPDES Number

XI. RECEIVING WATERS

List the requested permit action for each outfall (issue, reissue, add, delete, move, etc.), outfall designation including denoting "E" for existing and "P" for proposed outfalls, name of receiving water(s), latitude and longitude (to seconds) of location of each discharge point, the receiving water(s) use classification, whether or not the outfall discharges to an ADEM listed CWA Section 303(d) waterbody segment at the time of application submittal, and whether or not the stream is included in a TMDL.

| Action | Outfall E/P | Receiving Water | Latitude | Longitude | ADEM WUC | 303(d) Segment (Y / N) | TMDL Segment* (Y / N) |
|---|---|---|---|---|---|---|---|
| Reissue | 001E | Black Warrior River | N33°05' 5.81" | W-87°35'07.33" | F&W | N | N |
| | | | | | | | |
| | | | | | | | |
| | | | | | | | |
| | | | | | | | |

*If a TMDL Compliance Schedule is requested, the following should be attached as supporting documentation: (1) Justification for the requested Compliance Schedule (e.g. time for design and installation of control equipment, etc.); (2) Monitoring results for the pollutant(s) of concern which have not previously been submitted to the Department (sample collection dates, analytical results (mass and concentration), methods utilized, MDL/ML, etc. should be reported as available); (3) Requested interim limitations, if applicable; (4) Date of final compliance with TMDL limitations; and (5) Any other additional information available to support the requested compliance schedule.

XII. DISCHARGE CHARACTERIZATION

EPA Form 2C/2D Submittal

☑ Yes ☐ No A complete and correct EPA Form 2C and/or 2D or a Department-approved version of the EPA Form 2C is attached for each proposed and/or existing outfall. If "No", provide explanation:

XIII. INFORMATION

**Contact the Department prior to submittal with any questions or to request acceptable alternate content/format. Be advised that you are not authorized to commence regulated activity until this application can be processed, publicly noticed, and approval to proceed is received in writing from the Department.**

EPA Form(s) 1 and 2F need not be submitted unless specifically required by the Department. EPA Form(s) 2C and/or 2D (or a Department-approved version of the forms) are required to be submitted. The applicant should ensure that other than those proposed activities described in this application, there are no other potential pollutants, processes, process wastewaters or activities that require NPDES permit coverage. Permit coverage will allow for use of captive borrow areas used solely for the permitted operation. Coverage under the Department's NPDES Construction Stormwater Permit Program allows for short-lived, construction related, limited removal or relocation of fill material offsite, and does not provide coverage for coalbed methane operations.

The applicant should understand by submission of this application, that they are advised to contact:

1) The Alabama State Oil & Gas Board;
2) The Alabama Historical Commission for requirements related to any potential historic or culturally significant sites;
3) The Alabama Department of Conservation and Natural Resources (ADCNR) for requirements related to potential presence of threatened/endangered species; and
4) The US Army Corps of Engineers, Mobile or Nashville Districts, if this project could cause fill to be placed in federal waters/wetlands or could interfere with navigation.

The Department must be in receipt of a completed version of this form, including any supporting documentation, and the appropriate processing fee (including Greenfield Fee and Biomonitoring & Toxicity Limits fee(s), if applicable), prior to development of a draft NPDES permit. Send the completed form, supporting documentation, and the appropriate fees to:

Water Division–Mining and Natural Resource Section
Alabama Department of Environmental Management
Post Office Box 301463
Montgomery, AL 36130-1463
Phone: (334) 394-4372
Fax: (334) 279-3051
h2omail@adem.state.al.us
www.adem.alabama.gov

XIV. PROPOSED NEW OR INCREASED DISCHARGES

A. Pursuant to ADEM Admin. Code Ch. 335-6-10-.12(9), responses to the following questions must be provided by the applicant requesting NPDES permit coverage for new or expanded discharges of pollutant(s) to Tier 2 waters (except discharges eligible for coverage under general permits). As part of the permit application review process, the Department is required to determine, based on the applicant's demonstration, that the proposed new or increased discharge to Tier 2 waters is necessary for important economic or social development in the area in which the waters are located.

☐ Yes. New/increased discharges of pollutant(s) or discharge locations to Tier 2 waters are proposed.

☑ No. New/increased discharges of pollutants(s) or discharge locations to Tier 2 waters are not proposed.

B. If "Yes," complete this Part (XV.B.), Part XVI, and XVII. **Attach additional sheets/documentation and supporting information as needed.**

1) What environmental or public health problem will the discharge be correcting?

N/A: No new or increased discharges are proposed.

2) How much will the discharger be increasing employment (at its existing operations or as a result of initiating new operations)?

N/A: No new or increased discharges are proposed.

3) How much reduction in employment will the discharger be avoiding?

N/A: No new or increased discharges are proposed.

4) How much additional state or local taxes will the discharger be paying?

N/A: No new or increased discharges are proposed.

5) What public service to the community will the discharger be providing?

N/A: No new or increased discharges are proposed.

6) What economic or social benefit will the discharger be providing to the community?

N/A: No new or increased discharges are proposed.

XV. ALTERNATIVES ANALYSIS – ADEM Form 311 3/02

Pursuant to ADEM Admin. Code Ch. 335-6-10, an evaluation of the discharge alternatives identified below has been completed and the following conclusions were reached. All proposed new or expanded discharges of pollutant(s) covered by the Individual NPDES permitting program are subject to the provisions of the antidegradation policy. As part of the permit application review process, the Department is required to determine, based on the applicant's demonstration, that the proposed new or increased discharge to Tier 2 waters is necessary for important economic or social development in the area in which the waters are located. As a part of this demonstration, a registered professional engineer (PE) licensed to practice in the State of Alabama must complete an evaluation of the discharge alternatives, to include calculation of total annualized project costs (Item XVII) for each technically feasible alternative. Technically feasible alternatives with total annualized pollution control project costs that are less than 110% of the preferred alternative total annualized pollution control project costs for the Tier 2 new or increased discharge proposal are considered viable alternatives. **Supporting documentation is attached, referenced, or otherwise handled as appropriate.**

| Alternative | Viable | Non-Viable | Reason/Rationale For Indicating Non-Viable |
|---|---|---|---|
| 1) Treatment/Discharge Proposed In This Application | | | |
| 2) Land Application | | | |
| 3) Pretreatment/Discharge to POTW By SID Permit | | | |
| 4) Relocation of Discharge | | | |
| 5) Reuse/Recycle – Pollution Prevention | | | |
| 6) Other Process/Treatment Alternatives | | | |
| 7) Underground Injection By UIC Permit | | | |
| 8) Other Project Specific Alternative(s) Identified By the Applicant Or The ADEM | | | |
| 9) Other Project Specific Alternative(s) Identified By the Applicant Or The ADEM | | | |

COMMENTS: Refer to Section XIV, which states, "no" new or increased discharge of pollutants or discharge locations to Tier 2 waters are proposed.

XVI. CALCULATION OF TOTAL ANNUALIZED PROJECT COSTS FOR PRIVATE SECTOR PROJECTS - ADEM Form 313 3/02
(ADEM Form 312 3/02 - Public Sector Project is available upon request)

This item must be completed for each technically feasible alternative evaluated in Item XVI. **Copy, complete, and attach additional blocks/sheets and supporting information as needed.**

| | | |
|---|---|---|
| Capital Costs of pollution control project to be expended or financed by applicant (Supplied by applicant) | $ N/A (1) | * While actual payback schedules may differ across projects and companies, assume equal annual payments over a 10-year period for consistency in comparing projects. |
| Interest Rate for Financing (Expressed as a decimal) | N/A (i) | |
| Time Period of Financing (Assume 10 years *) | 10 years (n) | |
| Annualization Factor ** = $\frac{i}{(1+i)^{10}-1} + i$ <br> i = Interest Rate | N/A (2) | ** Or refer to Appendix B (application information) for calculated annualization factors. |
| Annualized Capital Cost [Calculate: (1) x (2) ] | $ N/A (3) | |
| Annual Cost of Operation & Maintenance (including but not limited to monitoring, inspection, permitting fees, waste disposal charges, repair, administration & replacement) *** | $ N/A (4) | *** For recurring costs that occur less frequently than once a year, pro rate the cost over the relevant number of years (e.g., for pumps replaced once every three years, include one-third of the cost in each year). |
| **Total Annual Cost of Pollution Control Project** [ (3) + (4) ] | $ N/A **(5)** | |

XVII. PROFESSIONAL ENGINEER (PE) CERTIFICATION

A detailed, comprehensive Pollution Abatement/Prevention Plan (PAP) must be prepared, signed, and certified by a professional engineer (PE), registered in the State of Alabama as follows:

"Except for the pages, portions, maps, plans, etc. contained in this application that are specifically certified by a professional engineer registered in the state of Alabama, I certify on behalf of the applicant, that I have completed an evaluation of discharge alternatives (Item XV) for any proposed new or increased discharges of pollutant(s) to Tier 2 waters and reached the conclusions indicated. I certify under penalty of law that technical information and data contained in this application, and any attached SPCC plan, maps, engineering designs, etc., has been prepared under my supervision for this operation utilizing effective, good engineering and pollution control practices and in accordance with the provisions of ADEM Admin. Code Division 335-6. If the treatment systems are properly implemented and maintained by the permittee, discharges of pollutants can reasonably be expected to be effectively minimized to the maximum extent practicable and according to permit discharge limitations and other permit requirements. The applicant has been advised that Best Management Practices must be fully implemented and regularly maintained as needed at the operation in accordance with good sediment, erosion, and other pollution control practices, permit requirements, and other ADEM requirements to ensure protection of groundwater and surface water quality."

Address Env. Testing & Eng. PO Box 715 Northport, Al 35476 PE Registration # 12998

Name and Title (type or print) John K. Haddock Phone Number 205-339-0216

Signature _____ Date Signed _____

XVIII. RESPONSIBLE OFFICIAL SIGNATURE*

This application must be signed by a Responsible Official of the applicant pursuant to ADEM Admin. Code R. 335-6-6-.09 who has overall responsibility for the activities of the operation.

"I certify under penalty of law that this document, including technical information and data, including any SPCC plan, maps, engineering designs, and all other attachments were prepared under my direction or supervision in accordance with a system designed to assure that qualified personnel properly gathered and evaluated the information submitted. Based on my inquiry of the PE and other person or persons under my supervision who manage the system or those persons directly responsible for gathering the information, the information submitted is, to the best of my knowledge and belief, true, accurate, and complete. I am aware that there are significant penalties for submitting false information including the possibility of fine or imprisonment for knowing violations.

I understand that regular inspections must be performed by, or under the direct supervision of, a PE and all appropriate treatment facilities and structural & nonstructural management practices or Department approved equivalent management practices identified by the PE must be fully implemented prior to and concurrent with commencement of regulated activities and regularly maintained as needed at the operation in accordance with good sediment, erosion, and other pollution control practices and ADEM requirements. I understand that the Best Management Practices must be fully implemented and regularly maintained so that discharges of pollutants can reasonably be expected to be effectively minimized to the maximum extent practicable and according to permit discharge limitations and other requirements to ensure protection of groundwater and surface water quality. I understand that failure to fully implement and regularly maintain required management practices for the protection of groundwater and surface water quality may subject the myself and/or the organization for which I represent to appropriate enforcement action. I understand that applicable records of data and information used to complete this application and any supplemental information submitted as part of this application must be retained pursuant to applicable requirements of ADEM Admin. Code Ch. 335-6.

I certify that this form has not been altered, and if copied, reproduced, or completed electronically, is consistent in format and identical in content to the ADEM approved form.

I further certify that the discharges described in this application have been tested or evaluated for the presence of non-stormwater discharges and any non-mining associated beneficiation/process pollutants and wastewaters have been fully identified."

Name (type or print) Scott Brasfield Official Title EH&S / Facilities Supt.

Signature Scott Brasfield Date Signed 3/26/19

*335-6-6-.09 Signatories to Permit Applications and Reports.

(1) The application for an NPDES permit shall be signed by a responsible official, as indicated below:
   (a) In the case of a corporation, by a principal executive officer of at least the level of vice president, or a manager assigned or delegated in accordance with corporate procedures, with such delegation submitted in writing if required by the Department, who is responsible for manufacturing, production, or operating facilities and is authorized to make management decisions which govern the operation of the regulated facility;
   (b) In the case of a partnership, by a general partner;
   (c) In the case of a sole partnership, by the proprietor, or
   (d) In the case of a municipal, state, federal, or other public entity, by either a principal executive officer, or ranking elected official.

# TABLE I
# PGP Operating, LLC.
## Environmental Permits and Certifications for Maxwell Crossing

| PERMIT TYPE | PERMIT /CERTIFICATION NUMBERS | FACILITY LOCATION |
|---|---|---|
| NPDES* | AL0056791 | Maxwell Crossing |
| Regulated Waste | ALR000024596 | Vance Comp. Sta. #31 |
| Regulated Waste | ALR000024588 | Vance Comp. Sta. #32 |
| Regulated Waste | ALR000024570 | Vance Comp. Sta. #33 |
| Regulated Waste | ALR000024562 | Vance Comp. Sta. #34 |
| | | |

*ACTIVE NPDES PERMITS

Revised: February 15, 2019

# TABLE II
# PGP Operating, LLC.
## ENVIRONMENTAL PERMITS AND CERTIFICATIONS

| PERMIT TYPE | PERMIT /CERTIFICATION NUMBERS | FACILITY LOCATION |
|---|---|---|
| NPDES | IU35370071 - Expired | Oak Grove |
| NPDES | IU3937383 - Expired | Oak Grove |
| NPDES | AL0067673 - Expired | CTOP |
| NPDES | AL0049476 - Expired | Hurricane Creek |
| NPDES | AL0056529 - Expired | Big Sandy Creek |
| NPDES | AL0049760 -Transferred | Deerlick Creek |
| NPDES | AL0058742 - Expired | Cut Off Lake |
| NPDES | AL0060925 - Expired | Kepple Creek |
| NPDES | AL0058726 - Expired | Marsh |
| NPDES | AL0062812 - Expired | Finches Ferry |
| NPDES | IU9797001 - Expired | Maxwell Crossing |
| NPDES | IU396300512 – ERC Terminated | Maxwell Crossing |
| NPDES | AL0055336 – ERC Terminated | Rock Creek |
| NPDES* | AL0057037 | TOGA |
| NPDES* | AL0060771 | Virginia Mines |
| NPDES* | AL0062430 | Oak Grove |
| NPDES* | AL0060798 | Brush Creek |
| NPDES* | AL0052264 | Big Sandy Creek #1 |
| NPDES* | AL0058734 - Terminated | Big Bend |
| NPDES* | AL0056791 | Maxwell Crossing |
| Regulated Waste | ALR000025494 - Terminated | Oak Grove Staging Area |
| Regulated Waste | ALR000015867 | Oak Grove Comp. Sta. #2 |
| Regulated Waste | ALR000032771 | Oak Grove Comp. Sta. #3 |
| Regulated Waste | ALR000015941 | Oak Grove Comp. Sta. #4 |
| Solid Waste | SW-063019-C002 | Oak Grove Comp. Sta. #4 |
| Regulated Waste | ALR000015933 | Oak Grove Comp. Sta. #5 |
| Regulated Waste | ALR000015925 | Oak Grove Comp. Sta. #7 |
| Regulated Waste | ALR000015917 | Oak Grove Comp. Sta. #8 |
| Regulated Waste | ALR000015891 - Terminated | Oak Grove Comp. Sta. #9 |
| Regulated Waste | ALR000015909 | Oak Grove Comp. Sta. #10 |
| Regulated Waste | ALR000015883 | Oak Grove Comp. Sta. #11 |
| Regulated Waste | ALR000015875 | Oak Grove Comp. Sta. #12 |
| Regulated Waste | ALR000024471 - Terminated | Vance Staging Area |
| Regulated Waste | ALR000024430 | Vance Comp. Sta. #1 |
| Regulated Waste | ALR000024497 | Vance Comp. Sta. #2 |
| Regulated Waste | ALR000024422 | Vance Comp. Sta. #4 |
| Solid Waste | SW-063019-C003 | Vance Comp. Sta. #4 |
| Regulated Waste | ALR000024414 | Vance Comp. Sta. #5 |
| Regulated Waste | ALR000024406 | Vance Comp. Sta. #6 |
| Regulated Waste | ALR000024620 | Vance Comp. Sta. #11 |
| Regulated Waste | ALR000024612 | Vance Comp. Sta. #12 |

TABLE II



| PERMIT TYPE | PERMIT /CERTIFICATION NUMBERS | FACILITY LOCATION |
|---|---|---|
| Regulated Waste | ALR000024604 | Vance Comp. Sta. #13 |
| Regulated Waste | ALR000024463 | Vance Comp. Sta. #14 |
| Regulated Waste | ALR000024638 | Vance Comp. Sta. #22 |
| Regulated Waste | ALR000024596 | Vance Comp. Sta. #31 |
| Regulated Waste | ALR000024588 | Vance Comp. Sta. #32 |
| Regulated Waste | ALR000024570 | Vance Comp. Sta. #33 |
| Regulated Waste | ALR000024562 | Vance Comp. Sta. #34 |
| Solid Waste | SW-013105-0044 - Expired | Vance Project |
| Solid Waste | SW-063013-0054 - Expired | Vance Project |
| Solid Waste | SW-013105-A006 - Expired | Vance Project |
| Solid Waste | SW-013105-0045 - Expired | Oak Grove Project |
| Solid Waste | SW-063013-0053 - Expired | Oak Grove Project |
| Solid Waste | SW-063015-A007 - Expired | Oak Grove Project |
| Solid Waste | SW-043009-B008 - Expired | Oak Grove Project |
| Air | 4-07-0538-01(001) - Terminated | Oak Grove Comp. Sta. #2 |
| Air | 4-07-0538-003-01 - Terminated | Oak Grove Comp. Sta. #2 |
| Air | 4-07-0538-005-01 | Oak Grove Comp. Sta. #2 |
| Air | 4-07-0538-006-01 | Oak Grove Comp. Sta. #2 |
| Air | 4-07-0539-001-01 - Terminated | Oak Grove Comp. Sta. #3 |
| Air | 4-07-0539-004-01 - Terminated | Oak Grove Comp. Sta. #3 |
| Air | 4-07-0539-008-01 | Oak Grove Comp. Sta. #3 |
| Air | 4-07-0539-012-01 | Oak Grove Comp. Sta. #3 |
| Air | 4-07-0539-005-01 | Oak Grove Comp. Sta. #3 |
| Air | 4-07-0540-01 (001) - Terminated | Oak Grove Comp. Sta. #4 |
| Air | 4-07-0540-002-01 - Terminated | Oak Grove Comp. Sta. #4 |
| Air | 4-07-0540-002-02 | Oak Grove Comp. Sta. #4 |
| Solid Waste | SW-063019-C002 | Oak Grove Comp. Sta. #4 |
| Air | 4-07-0541-01 (001)-Terminated | Oak Grove Comp. Sta. #5 |
| Air | 4-07-0541-004-01 - Terminated | Oak Grove Comp. Sta. #5 |
| Air | 4-07-0541-01 (005) - Terminated | Oak Grove Comp. Sta. #5 |
| Air | 4-07-0541-007-01 | Oak Grove Comp. Sta. #5 |
| Air | 4-07-0541-008-01 | Oak Grove Comp. Sta. #5 |
| Air | 4-07-0535-01 (001)-Terminated | Oak Grove Comp. Sta. #7 |
| Air | 4-07-0535-004-01 - Terminated | Oak Grove Comp. Sta. #7 |
| Air | 4-07-0535-006-01 | Oak Grove Comp. Sta. #7 |
| Air | 4-07-0535-007-01 | Oak Grove Comp. Sta. #7 |
| Air | 4-07-0543-01 (001) -Terminated | Oak Grove Comp. Sta. #8 |
| Air | 4-07-0543-01 (002) -Terminated | Oak Grove Comp. Sta. #8 |
| Air | 4-07-0543-005-02 - Terminated | Oak Grove Comp. Sta. #8 |
| Air | 4-07-0543-001-04 | Oak Grove Comp. Sta. #8 |
| Air | 4-07-0543-007-02 | Oak Grove Comp. Sta. #8 |
| Air | 4-07-0543-008-02 | Oak Grove Comp. Sta. #8 |
| Air | 4-07-0543-009-01 | Oak Grove Comp. Sta. #8 |
| Air | 4-07-0528-01 (001) - Terminated | Oak Grove Comp. Sta. #9 |

TABLE II



| PERMIT TYPE | PERMIT /CERTIFICATION NUMBERS | FACILITY LOCATION |
|---|---|---|
| Air | 4-07-0544-01 (001) -Terminated | Oak Grove Comp. Sta. #10 |
| Air | 4-07-0544-002-01 -Terminated | Oak Grove Comp. Sta. #10 |
| Air | 4-07-0544-003-01 - Terminated | Oak Grove Comp. Sta. #10 |
| Air | 4-07-0544-001-02 | Oak Grove Comp. Sta. #10 |
| Air | 4-07-0544-002-02 | Oak Grove Comp. Sta. #10 |
| Air | 4-07-0544-004-02 | Oak Grove Comp. Sta. #10 |
| Air | 413-0047-X002-Terminated | Oak Grove Comp. Sta. #11 |
| Air | 413-0047-X003-Terminated | Oak Grove Comp. Sta. #11 |
| Air | 413-0047 | Oak Grove Comp. Sta. #11 |
| Air | 413-0051 | Oak Grove Comp. Sta. #12 |
| Air | 4-07-0569-001-01 -Terminated | Oak Grove Comp. Sta. #15 |
| Air | 4-07-0569-002-01 - Terminated | Oak Grove Comp. Sta. #15 |
| Air | 4-07-0569-004-01 | Oak Grove Comp. Sta. #15 |
| Air | 4-07-0569-005-01 | Oak Grove Comp. Sta. #15 |
| Air | 413-0060-X002 -Terminated | Vance Comp. Sta. #2 |
| Air | 413-0060-Terminated | Vance Comp. Sta. #2 |
| Air | 413-0061-Terminated | Vance Comp. Sta. #2 |
| Air | 413-0061-X002-Terminated | Vance Comp. Sta. #6 |

*ACTIVE NPDES PERMITS
Revised: January 4, 2019

## TABLE III

# PGP Operating, LLC.

## MAXWELL CROSSING
## NPDES PERMIT #AL0056791

## LEASEHOLD LOCATIONS
## (REFERENCE ATTACHED MAPS)

| COUNTY | TOWNSHIP | RANGE | SECTION |
|---|---|---|---|
| TUSCALOOSA | 21S | 8W | 19,20,21,28,29,30,31,32,33,34,35,36 |
| TUSCALOOSA | 21S | 9W | 25,35,36. |
| TUSCALOOSA | 22S | 8W | 1,2,3,4,5,6,7,8,9,10,11,12,14,15,16,17,18,19,20,21, 22,23,27,28,29,30. |
| TUSCALOOSA | 22S | 9W | 1,2,10,11,12,13,14,15,16,22,23,24,25,26,27,35,36. |
| TUSCALOOSA | 24N | 5E | 1,2,3,4,12. |
| TUSCALOOSA | 24N | 6E | 1,2,3,4,5,6,7,8,9,10,11,12,13,14,15,16,22,23,24. |
| TUSCALOOSA | 24N | 7E | 5,6,7,18. |
| | | | |

## POINT OF DISCHARGE LOCATIONS

| COUNTY | P.O.D. | SECTION | TOWNSHIP | RANGE | LATITUDE | LONGITUDE |
|---|---|---|---|---|---|---|
| TUSCALOOSA | DSN-001E* | 4 | 24N | 5E | N33°05' 5.81" | W-87°35' 07.33" |

* E = Existing

March
03/26/2019

# ATTACHMENT A

# PGP Operating, LLC.

## ITEM V: DISTURBED AREA IN ACRES

PGP Operating always applies good environmental engineering erosion control techniques as soon as practical when an area is disturbed. Implementing Coalbed Methane (CBM) Industry Best Management Practices Plan (BMPP) minimizes the time an area is disturbed. The majority of the Maxwell Crossing NPDES Permit facilities (approximately 176) have been in place for over 30 years, therefore these facilities are very mature and stabilized. All access roads, well sites, compressor stations, material storage areas, office areas, and pond dikes are rocked. Also, all pond slopes, pipeline rights-of-way, and power line rights-of-way are vegetated. Temporary BMP's (i.e. hay bales and silt fences) have been replaced with permanent structures such as rip-rap and additional seeding where needed to further stabilize a given area. Therefore, due to the established nature of this original permit area, there are no current areas classified as disturbed.

Depending on economic factors, new wells, pipelines, and power line rights-of-way may be constructed during the five-year time-period of this NPDES permit. In 2019, PGP Operating has no proposals for drilling or construction. Construction of new facilities beyond 2019 is not known at the time of this reissuance application. The facility location of this permit consists of approximately 61,440 acres and the predicted total area of disturbance per year is zero acres.

All PGP Operating disturbed areas are monitored by company and contract personnel on a regular basis. Any potential area requiring maintenance attention is reported to the construction supervisors and resolved in a timely and prudent matter.

Please print or type in the unshaded areas only.

EPA I.D. NUMBER (*copy from Item 1 of Form 1*)
AL0056791

Form Approved.
OMB No. 2040-0086.
Approval expires 3-31-98.

FORM **2C** NPDES

EPA

U.S. ENVIRONMENTAL PROTECTION AGENCY
APPLICATION FOR PERMIT TO DISCHARGE WASTEWATER
**EXISTING MANUFACTURING, COMMERCIAL, MINING AND SILVICULTURE OPERATIONS**
*Consolidated Permits Program*

## I. OUTFALL LOCATION

For each outfall, list the latitude and longitude of its location to the nearest 15 seconds and the name of the receiving water.

| A. OUTFALL NUMBER (*list*) | B. LATITUDE | | | C. LONGITUDE | | | D. RECEIVING WATER (*name*) |
|---|---|---|---|---|---|---|---|
| | 1. DEG. | 2. MIN. | 3. SEC. | 1. DEG. | 2. MIN. | 3. SEC. | |
| DSN-001E | 33.00 | 5.00 | 5.81 | -87.00 | 35.00 | 7.33 | Black Warrior River |
| | | | | | | | |
| | | | | | | | |
| | | | | | | | |
| | | | | | | | |

## II. FLOWS, SOURCES OF POLLUTION, AND TREATMENT TECHNOLOGIES

A. Attach a line drawing showing the water flow through the facility. Indicate sources of intake water, operations contributing wastewater to the effluent, and treatment units labeled to correspond to the more detailed descriptions in Item B. Construct a water balance on the line drawing by showing average flows between intakes, operations, treatment units, and outfalls. If a water balance cannot be determined (*e.g., for certain mining activities*), provide a pictorial description of the nature and amount of any sources of water and any collection or treatment measures.

B. For each outfall, provide a description of: (1) All operations contributing wastewater to the effluent, including process wastewater, sanitary wastewater, cooling water, and storm water runoff; (2) The average flow contributed by each operation; and (3) The treatment received by the wastewater. Continue on additional sheets if necessary.

| 1. OUTFALL NO. (*list*) | 2. OPERATION(S) CONTRIBUTING FLOW | | 3. TREATMENT | | |
|---|---|---|---|---|---|
| | a. OPERATION (*list*) | b. AVERAGE FLOW (*include units*) | a. DESCRIPTION | b. LIST CODES FROM TABLE 2C-1 | |
| DSN-001E | Treated coalbed methane produced | | Sedimentation, chemical precipitation, pre-aeration, discharge to surface water & landfill | 1-U | 2-C |
| | water, drill fluids, stimulation | | | 3-E | 4-A |
| | fluids, & oil/water emulsion. | | | 5-Q | 5-H |
| | | | | | |
| | | | | | |
| | | | | | |
| | | | | | |
| | | | | | |
| | | | | | |
| | | | | | |
| | | | | | |
| | | | | | |
| | | | | | |
| | | | | | |
| | | | | | |
| | | | | | |
| | | | | | |
| | | | | | |
| | | | | | |
| | | | | | |
| | | | | | |
| | | | | | |
| | | | | | |
| | | | | | |
| | | | | | |
| | | | | | |

OFFICIAL USE ONLY (*effluent guidelines sub-categories*)

CONTINUED FROM THE FRONT

C. Except for storm runoff, leaks, or spills, are any of the discharges described in Items II-A or B intermittent or seasonal?

☐ YES (*complete the following table*) ☑ NO (*go to Section III*)

| 1. OUTFALL NUMBER (*list*) | 2. OPERATION(s) CONTRIBUTING FLOW (*list*) | 3. FREQUENCY | | 4. FLOW | | | | |
|---|---|---|---|---|---|---|---|---|
| | | a. DAYS PER WEEK (*specify average*) | b. MONTHS PER YEAR (*specify average*) | a. FLOW RATE (*in mgd*) | | B. TOTAL VOLUME (*specify with units*) | | C. DURATION (*in days*) |
| | | | | 1. LONG TERM AVERAGE | 2. MAXIMUM DAILY | 1. LONG TERM AVERAGE | 2. MAXIMUM DAILY | |
| | | | | | | | | |

## III. PRODUCTION

A. Does an effluent guideline limitation promulgated by EPA under Section 304 of the Clean Water Act apply to your facility?

☐ YES (*complete Item III-B*) ☑ NO (*go to Section IV*)

B. Are the limitations in the applicable effluent guideline expressed in terms of production (*or other measure of operation*)?

☐ YES (*complete Item III-C*) ☑ NO (*go to Section IV*)

C. If you answered "yes" to Item III-B, list the quantity which represents an actual measurement of your level of production, expressed in the terms and units used in the applicable effluent guideline, and indicate the affected outfalls.

| 1. AVERAGE DAILY PRODUCTION | | | 2. AFFECTED OUTFALLS (*list outfall numbers*) |
|---|---|---|---|
| a. QUANTITY PER DAY | b. UNITS OF MEASURE | c. OPERATION, PRODUCT, MATERIAL, ETC. (*specify*) | |
| | | | |

## IV. IMPROVEMENTS

A. Are you now required by any Federal, State or local authority to meet any implementation schedule for the construction, upgrading or operations of wastewater treatment equipment or practices or any other environmental programs which may affect the discharges described in this application? This includes, but is not limited to, permit conditions, administrative or enforcement orders, enforcement compliance schedule letters, stipulations, court orders, and grant or loan conditions.

☐ YES (*complete the following table*) ☑ NO (*go to Item IV-B*)

| 1. IDENTIFICATION OF CONDITION, AGREEMENT, ETC. | 2. AFFECTED OUTFALLS | | 3. BRIEF DESCRIPTION OF PROJECT | 4. FINAL COMPLIANCE DATE | |
|---|---|---|---|---|---|
| | a. NO. | b. SOURCE OF DISCHARGE | | a. REQUIRED | b. PROJECTED |
| | | | | | |

B. OPTIONAL: You may attach additional sheets describing any additional water pollution control programs (*or other environmental projects which may affect your discharges*) you now have underway or which you plan. Indicate whether each program is now underway or planned, and indicate your actual or planned schedules for construction.

☐ MARK "X" IF DESCRIPTION OF ADDITIONAL CONTROL PROGRAMS IS ATTACHED

 CONTINUE ON PAGE 3

EPA I.D. NUMBER (*copy from Item 1 of Form 1*)

AL0056791

CONTINUED FROM PAGE 2

## V. INTAKE AND EFFLUENT CHARACTERISTICS

A, B, & C: See instructions before proceeding – Complete one set of tables for each outfall – Annotate the outfall number in the space provided.
NOTE: Tables V-A, V-B, and V-C are included on separate sheets numbered V-1 through V-9.

D. Use the space below to list any of the pollutants listed in Table 2c-3 of the instructions, which you know or have reason to believe is discharged or may be discharged from any outfall. For every pollutant you list, briefly describe the reasons you believe it to be present and report any analytical data in your possession.

| 1. POLLUTANT | 2. SOURCE | 1. POLLUTANT | 2. SOURCE |
|---|---|---|---|
| | | | |

## VI. POTENTIAL DISCHARGES NOT COVERED BY ANALYSIS

Is any pollutant listed in Item V-C a substance or a component of a substance which you currently use or manufacture as an intermediate or final product or byproduct?

☐ YES (*list all such pollutants below* ) ☑ NO (*go to Item VI-B*)

 CONTINUE ON REVERSE

CONTINUED FROM THE FRONT

## VII. BIOLOGICAL TOXICITY TESTING DATA

Do you have any knowledge or reason to believe that any biological test for acute or chronic toxicity has been made on any of your discharges or on a receiving water in relation to your discharge within the last 3 years?

☑ YES (*identify the test(s) and describe their purposes below*) ☐ NO (*go to Section VIII*)

Acute toxicity testing is performed on a bi-annual basis to comply with existing NPDES Permit.

## VIII. CONTRACT ANALYSIS INFORMATION

Were any of the analyses reported in Item V performed by a contract laboratory or consulting firm?

☑ YES (*list the name, address, and telephone number of, and pollutants analyzed by, each such laboratory or firm below*) ☐ NO (*go to Section IX*)

| A. NAME | B. ADDRESS | C. TELEPHONE (*area code & no.*) | D. POLLUTANTS ANALYZED (*list*) |
|---|---|---|---|
| McGehee Engineering Corp. | P.O. Box 3431 Jasper, AL 35022-3431 | (205)221-0686 | Refer to EPA Form Modified 2C, Item V |

## IX. CERTIFICATION

*I certify under penalty of law that this document and all attachments were prepared under my direction or supervision in accordance with a system designed to assure that qualified personnel properly gather and evaluate the information submitted. Based on my inquiry of the person or persons who manage the system or those persons directly responsible for gathering the information, the information submitted is, to the best of my knowledge and belief, true, accurate, and complete. I am aware that there are significant penalties for submitting false information, including the possibility of fine and imprisonment for knowing violations.*

| A. NAME & OFFICIAL TITLE (*type or print*) | B. PHONE NO. (*area code & no.*) |
|---|---|
| Scott Brasfield - Superintendent - Facilities + EHS | (205) 554-3137 |
| C. SIGNATURE Scott Brasfield | D. DATE SIGNED 3/26/19 |

## COAL MINING AND/OR PREPARATION PLANT APPLICATION METALS, CYANIDE, AND TOTAL PHENOLS OUTFALL DATA

| NPDES# | APPLICANT | Facility |
|---|---|---|
| AL0056791 | PGP Operating, LLC., 17300 Brookwood Parkway Vance, AL 35490, Phone: (205) 554-3100 | Maxwell Crossing |
| OUTFALL # 001 | DATE SAMPLED 2/15/2019 | SUBSTANTIALLY IDENTICAL OUTFALLS |

Please supply the following information separately for every P outfall evaluated or E outfall tested. If necessary, attach extra sheets. If you are a coal facility mark "X" in appropriate column for all ALL listed metals, cyanides, and total phenols. If the outfall is existing, you must provide the results of at least one analysis for that pollutant. If the outfall is proposed you must either submit at least one representative analysis for a substantially identical existing outfall at the facility, or if not available, at least one representative analysis for a substantially identical outfall at another similar facility.

| POLLUTANT AND CAS NO. (if available) 1/ | MARK "X" | | | EFFLUENT | | | | | | | | | | | |
|---|---|---|---|---|---|---|---|---|---|---|---|---|---|---|---|
| | TESTING REQUIRED EXISTING OUTFALL | BELIEVED PRESENT PROPOSED OUTFALL | BELIEVED ABSENT PROPOSED OUTFALL | MAXIMUM DAILY VALUE | | MAXIMUM 30 DAY VALUE (if available) | | LONG TERM AVRG. VALUE (If available) | | # Of Analyses | Frequency of DischargeDays/Mth Hours/Day | 40 CFR Part 136 EPA Approved Method Analysis Used | Detection Limit (µ/L) | Receiving Water 7-Q10 Flow (CFS) | 2/ Optional Instream hardness (mg/L CaCO3) |
| | | | | CONCENT-RATION (µ/L) | MASS (lbs) | CONCENT-RATION (µ/L) | MASS (lbs) | CONCENT-RATION (µ/L) | MASS (lbs) | | | | | | |
| 1M. Antimony, Dissolved (7440-36-0) | X | | | <1.92 | N/A | | | | | 1 | Precipitation Based | EPA 200.8 | 0.6 µg/L | 1366.2597 | 67.3 |
| 2M. Arsenic, Dissolved (7440-38-2) | X | | | <0.27 | N/A | | | | | 1 | Precipitation Based | EPA 200.8 | 0.08 µg/L | 1366.2597 | 67.3 |
| 3M. Beryllium, Dissolved (7440-41-7) | X | | | <2.20 | N/A | | | | | 1 | Precipitation Based | EPA 200.8 | 0.69 µg/L | 1366.2597 | 67.3 |
| 4M. Cadmium, Dissolved (7440-43-9) | X | | | <0.08 | N/A | | | | | 1 | Precipitation Based | EPA 200.8 | 0.03 µg/L | 1366.2597 | 67.3 |
| 5M Chromium, Dissolved (7440-47-3) | X | | | <1.64 | N/A | | | | | 1 | Precipitation Based | EPA 200.8 | 0.52 µg/L | 1366.2597 | 67.3 |
| 6M Copper, Dissolved (7440-50-8) | X | | | <0.90 | N/A | | | | | 1 | Precipitation Based | EPA 200.8 | 0.28 µg/L | 1366.2597 | 67.3 |
| 7M Lead, Dissolved (7439-92-1) | X | | | 1.40 | 1.03E+01 | | | | | 1 | Precipitation Based | EPA 200.8 | 0.1 µg/L | 1366.2597 | 67.3 |
| 8M Mercury, Total (7439-97-6) | X | | | <0.010 | N/A | | | | | 1 | Precipitation Based | EPA 245.2 | 0.003 µg/L | 1366.2597 | 67.3 |
| 9M Nickel, Dissolved (7440-02-0) | X | | | <6.86 | N/A | | | | | 1 | Precipitation Based | EPA 200.8 | 2.16 µg/L | 1366.2597 | 67.3 |
| 10M Selenium, Total (7782-49-2) | X | | | <0.95 | N/A | | | | | 1 | Precipitation Based | EPA 200.8 | 0.3 µg/L | 1366.2597 | 67.3 |
| 11M Silver, Dissolved (7440-22-4) | X | | | <0.15 | N/A | | | | | 1 | Precipitation Based | EPA 200.8 | 0.05 µg/L | 1366.2597 | 67.3 |
| 12M Thallium, Dissolved (7440-28-0) | X | | | <0.08 | N/A | | | | | 1 | Precipitation Based | EPA 200.8 | 0.03 µg/L | 1366.2597 | 67.3 |
| 13M Zinc, Dissolved (7440-66-6) | X | | | <16.45 | N/A | | | | | 1 | Precipitation Based | EPA 200.8 | 5.17 µg/L | 1366.2597 | 67.3 |
| 14M Cyanide, Total (57-12-5) | X | | | <3 | N/A | | | | | 1 | Precipitation Based | SM4500 $CN^-$ E | 1 µg/L | 1366.2597 | 67.3 |
| 15M Phenols, Total | X | | | <6 | N/A | | | | | 1 | Precipitation Based | EPA 420.1 | 2 µg/L | 1366.2597 | 67.3 |

By submission of this form, I/we (PE and applicant) certify that I/we have read the instructions for completion of EPA Forms 2C & 2D. Attach Additional Information As Needed

1/ For the purpose of demonstration of compliance with these parameters, "Total" and "Total Recoverable" measurements shall be considered equivalent.

2/ Instream Hardness ($CaCO_3$) will be assumed to be 50 mg/L if instream Hardness data is not submitted.

Sampling results must be representative of the discharge and test methods used in accordance with 40 CFR Part 136 and 40 CFR 122.21(g)(7)(i).

Rev 2/1/07

McGehee Engineering Corp collecting samples and performing analysis.

Name of Permittee and/or Company(s) Collecting Samples And Performing Analyses.

I certify under penalty of law that this document and all attachments were prepared under my direction/supervision in accordance with a system designed to assure that qualified personnel properly gather and evaluate the information submitted. Based on my inquiry of the person or persons who manage the system, or those persons directly responsible for gathering the information, the information submitted is, to the best of my knowledge and belief, true, accurate, and complete. I am aware that there are significant penalties for submitting false information, including the possibility of fine and imprisonment for knowing violations.

Scott Brasfield, Superintendent
Name & Title of Responsible Official

Signature

3/26/19
Date

**Date Printed:** 3/12/2019

**Client:** **PGP Operating, LLC**
17300 Brookwood Parkway
Vance, AL 35490

**Location:** Maxwell Crossing -- Effluent

**Sample Date:** 2/15/2019

**Sampled By:** McGehee Engineering Corp.

## REPORT OF FINDINGS

**Lab ID:** 19021808-01

| Analyte | Result | Minimum Level / Units | Method | Analysis Date | Analyst |
|---|---|---|---|---|---|
| Antimony, Dissolved | BML | 1.92 µg/L | EPA200.8 | 2/18/2019 3:42:44 PM | KyleThomas |
| Arsenic, Dissolved | BML | 0.27 µg/L | EPA200.8 | 2/18/2019 3:42:44 PM | KyleThomas |
| Arsenic, Total | BML | 0.27 µg/L | EPA200.8 | 2/18/2019 3:38:42 PM | KyleThomas |
| Beryllium, Dissolved | BML | 2.20 µg/L | EPA200.8 | 2/18/2019 3:42:44 PM | KyleThomas |
| Cadmium, Dissolved | BML | 0.08 µg/L | EPA200.8 | 2/18/2019 3:42:44 PM | KyleThomas |
| Chromium, Dissolved | BML | 1.64 µg/L | EPA200.8 | 2/18/2019 3:42:44 PM | KyleThomas |
| Copper, Dissolved | BML | 0.90 µg/L | EPA200.8 | 2/18/2019 3:42:44 PM | KyleThomas |
| Cyanide, Total | BML | 3.0 µg/L | SM4500-CN-E | 2/20/2019 | KyleThomas |
| Flow/MGD | NA | MGD | EPA5.1 | 2/15/2019 | BlakeSimmons |
| Hardness | 1317 | meq CaCO3/L | SM2340-B | 2/18/2019 | Calculation |
| Lead, Dissolved | 1.40 | 0.31 µg/L | EPA200.8 | 2/18/2019 3:42:44 PM | KyleThomas |
| Mercury, Total | BML | 0.010 µg/L | EPA245.2 | 2/27/2019 2:52:00 PM | KyleThomas |
| Nickel, Dissolved | BML | 6.86 µg/L | EPA200.8 | 2/18/2019 3:42:44 PM | KyleThomas |
| Phenols, Total | BML | 6.0 µg/L | EPA420.1 | 2/19/2019 | KyleThomas |
| Selenium, Total | BML | 0.95 µg/L | EPA200.8 | 2/18/2019 3:38:42 PM | KyleThomas |
| Silver, Dissolved | BML | 0.15 µg/L | EPA200.8 | 2/18/2019 3:42:44 PM | KyleThomas |
| Thallium, Dissolved | BML | 0.08 µg/L | EPA200.8 | 2/18/2019 3:42:44 PM | KyleThomas |
| Zinc, Dissolved | BML | 16.45 µg/L | EPA200.8 | 2/18/2019 3:42:44 PM | KyleThomas |

Analysis Approved: 3/12/2019

John Morris
Laboratory Manager

*BML = Below Minimum Level*



Post Office Box 3431 • 450 19th Street • Jasper, Alabama 35502-3431 • 205-221-0686 • Fax 205-221-7721 • www.mcgehee.org

**Date Printed:** 3/12/2019

**Client:** **PGP Operating, LLC**
17300 Brookwood Parkway
Vance, AL 35490

**Location:** Maxwell Crossing -- Up Stream
**Sample Date:** 2/15/2019
**Sampled By:** McGehee Engineering Corp.

## REPORT OF FINDINGS

**Lab ID:** 19021808-02

| Analyte | Result | Minimum Level / Units | Method | Analysis Date | Analyst |
|---|---|---|---|---|---|
| Antimony, Dissolved | BML | 1.92 µg/L | EPA200.8 | 2/18/2019 3:50:49 PM | KyleThomas |
| Arsenic, Dissolved | BML | 0.27 µg/L | EPA200.8 | 2/18/2019 3:50:49 PM | KyleThomas |
| Arsenic, Total | 0.28 | 0.27 µg/L | EPA200.8 | 2/18/2019 3:46:47 PM | KyleThomas |
| Beryllium, Dissolved | BML | 2.20 µg/L | EPA200.8 | 2/18/2019 3:50:49 PM | KyleThomas |
| Cadmium, Dissolved | BML | 0.08 µg/L | EPA200.8 | 2/18/2019 3:50:49 PM | KyleThomas |
| Chromium, Dissolved | BML | 1.64 µg/L | EPA200.8 | 2/18/2019 3:50:49 PM | KyleThomas |
| Copper, Dissolved | BML | 0.90 µg/L | EPA200.8 | 2/18/2019 3:50:49 PM | KyleThomas |
| Cyanide, Total | BML | 3.0 µg/L | SM4500-CN-E | 2/20/2019 | KyleThomas |
| Flow/MGD | 10530 | MGD | EPA5.1 | 2/15/2019 | BlakeSimmons |
| Hardness | 67.30 | meq CaCO3/L | SM2340-B | 2/18/2019 | Calculation |
| Lead, Dissolved | BML | 0.31 µg/L | EPA200.8 | 2/18/2019 3:50:49 PM | KyleThomas |
| Mercury, Total | BML | 0.010 µg/L | EPA245.2 | 2/27/2019 2:55:00 PM | KyleThomas |
| Nickel, Dissolved | BML | 6.86 µg/L | EPA200.8 | 2/18/2019 3:50:49 PM | KyleThomas |
| Phenols, Total | BML | 6.0 µg/L | EPA420.1 | 2/19/2019 | KyleThomas |
| Selenium, Total | BML | 0.95 µg/L | EPA200.8 | 2/18/2019 3:46:47 PM | KyleThomas |
| Silver, Dissolved | BML | 0.15 µg/L | EPA200.8 | 2/18/2019 3:50:49 PM | KyleThomas |
| Thallium, Dissolved | BML | 0.08 µg/L | EPA200.8 | 2/18/2019 3:50:49 PM | KyleThomas |
| Zinc, Dissolved | BML | 16.45 µg/L | EPA200.8 | 2/18/2019 3:50:49 PM | KyleThomas |

Analysis Approved: 3/12/2019

John Morris
Laboratory Manager

*BML = Below Minimum Level*



Post Office Box 3431 • 450 19th Street • Jasper, Alabama 35502-3431 • 205-221-0686 • Fax 205-221-7721 • www.mcgehee.org

**Date Printed:** 3/12/2019

**Client:** **PGP Operating, LLC**
17300 Brookwood Parkway
Vance, AL 35490

**Location:** **PGP-Special -**

# REPORT OF FINDINGS

| | | | | | | | | | | | | | | | | | |
|---|---|---|---|---|---|---|---|---|---|---|---|---|---|---|---|---|---|
| PGP-Special - | | | Min. | | | | | | | | | | | | | | |
| Collected by: | | BlakeSimmons | Average | | | | | | | | | | | | | | |
| Collected on: | | 2/15/2019 | Max. | | | | | | | | | | | | | | |
| Order Id: | | 19021808 | Freq. | | | | | | | | | | | | | | |
| Lab Id. | Collect Time | Outfall | Flow MGD | Depth Feet | pH s.u. | TSS mg/L | Cond. µS/cm | | | | Fe mg/L | Mn mg/L | | Fe, Dis mg/L | Mn, Dis mg/L | | Hardness meq CaCO3/L |
| -01 | 8:37 AM | Maxwell Crossing -- Effluent | NA | | 8.20 | 19 | 21860 | | | | 0.05 | BML | | BML | BML | | 1317 |
| Comments | | | Sb µg/L | As µg/L | Be µg/L | Cd µg/L | Cr µg/L | Cu µg/L | Pb µg/L | Ni µg/L | Se µg/L | Ag µg/L | Tl µg/L | Zn µg/L | Hg µg/L | CN µg/L | Phenol µg/L |
| | | | BML | BML | BML | BML | BML | BML | 1.67 | BML | BML | BML | BML | BML | BML | BML | BML |
| | | | Sb, Dis µg/L | As, Dis µg/L | Be, Dis µg/L | Cd, Dis µg/L | Cr, Dis µg/L | Cu, Dis µg/L | Pb, Dis µg/L | Ni, Dis µg/L | | Ag, Dis µg/L | Tl, Dis µg/L | Zn, Dis µg/L | | | |
| | | | | BML | BML | BML | BML | BML | 1.40 | BML | | BML | BML | BML | | | |
| | | | | As III µg/L | | | | | | | | | | | | | |
| | | | | | | | | | | | | | | | | | |
| Lab Id. | Collect Time | Outfall | Flow MGD | Depth Feet | pH s.u. | TSS mg/L | Cond. µS/cm | | | | Fe mg/L | Mn mg/L | | Fe, Dis mg/L | Mn, Dis mg/L | | Hardness meq CaCO3/L |
| -02 | 8:52 AM | Maxwell Crossing -- Up Stream | 10530 | | 7.80 | 12 | 180.1 | | | | 0.35 | 0.11 | | BML | 0.07 | | 67.30 |
| Comments | | | Sb µg/L | As µg/L | Be µg/L | Cd µg/L | Cr µg/L | Cu µg/L | Pb µg/L | Ni µg/L | Se µg/L | Ag µg/L | Tl µg/L | Zn µg/L | Hg µg/L | CN µg/L | Phenol µg/L |
| | | | BML | 0.28 | BML | BML | BML | 0.92 | 0.33 | BML | BML | BML | BML | BML | BML | BML | BML |
| | | | Sb, Dis µg/L | As, Dis µg/L | Be, Dis µg/L | Cd, Dis µg/L | Cr, Dis µg/L | Cu, Dis µg/L | Pb, Dis µg/L | Ni, Dis µg/L | | Ag, Dis µg/L | Tl, Dis µg/L | Zn, Dis µg/L | | | |
| | | | | BML | BML | BML | BML | BML | BML | BML | | BML | BML | BML | | | |
| | | | | As III µg/L | | | | | | | | | | | | | |
| | | | | | | | | | | | | | | | | | |

Received in lab: 2/15/2019 4:00:00 PM

Tuesday, March 12, 2019

*NA = Not Analysed ND = No Discharge*

# ITEM 2C,II.,A.
# MAXWELL CROSSING - NPDES PERMIT AL0056791
# WATER DISPOSAL FLOWCHART

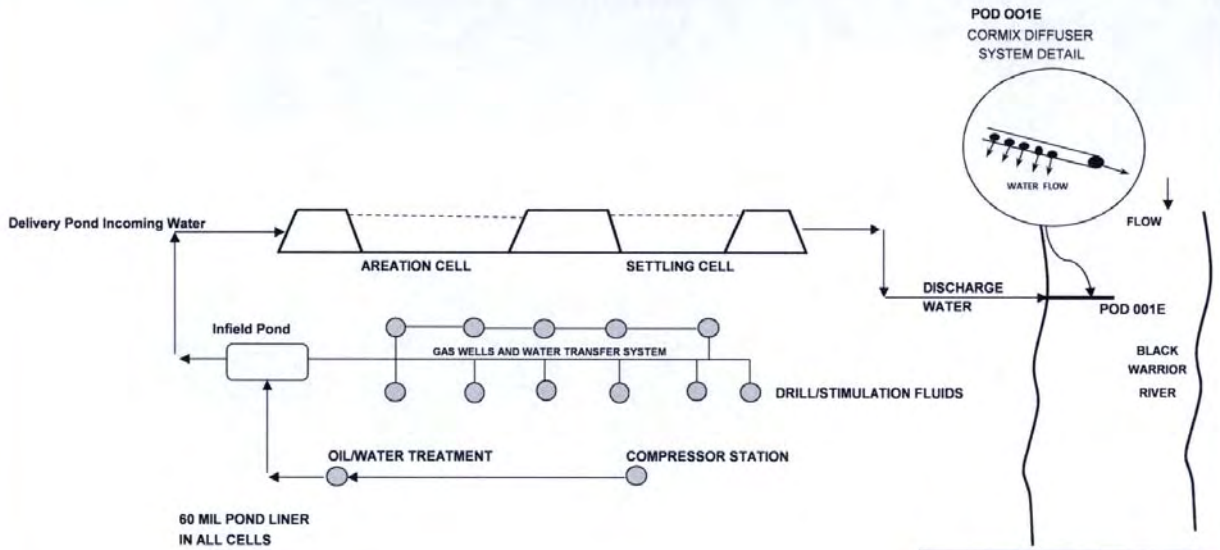


PGP OPERATING LLC

**MAXWELL CROSSING**
**NPDES PERMIT No. AL0056791**

| REVISED: 2/15/19 | Scale: NTS |
|---|---|

ITEM 2C, II., B.

## PGP Operating, LLC.

### MAXWELL CROSSING
### NPDES PERMIT NO. AL0056791
### TUSCALOOSA COUNTY, ALABAMA

| POND I.D. | LOCATION | CAPACITY (BARRELS) | |
|---|---|---|---|
| 5050 | S32-T21S-R8W | 1,870 | Inactive |
| 5051 | S8-T22S-R8W | 65,000 | |
| 5052 | S14-T22S-R9W | 25,000 | |
| **5053 | S4-T24N-R5E | 80,000 | |

**NOTE:**
** Primary Treatment/Discharge pond

**Item 2C II. B2**
**Maxwell Crossing**
**Treatment Process for Produced / Process Water**

The primary methods of treatment of water from coalbed methane operations are oxidation and settling. Produced/process wastewater is delivered from conventional methane gas wells, drilling pits, compressors, and oil/water treatment facilities through buried water gathering pipelines. Our water-gathering pipelines are typically constructed of polyvinyl chloride (PVC) or polyethylene (PE). To treat water at the Maxwell Crossing facilities, we utilize aeration and sedimentation ponds to treat produced/process water before discharging that water into the Black Warrior River. We utilize three basic types of ponds: treatment ponds, transfer ponds, and storage ponds. Storage ponds are only used in the event of operational problems with a treatment or transfer pond. Treatments ponds are the first stage in the water treatment process where water is delivered through a system of water-gathering pipelines connected to well heads and compressor station discharge water piping throughout the permit area. The treatment ponds typically consist of two cells connected by a cross-over pipe. In the first cell, large volumes of air are introduced into the incoming water using an electric regenerative blower. The purpose of aeration at this point is to raise the oxygen level within the water to precipitate any iron or manganese within the produced/process wastewater. After aeration takes place in the first cell, aerated water passes into the second cell of the treatment pond allowing adequate retention time for settlement of any metal precipitates. To enhance settlement of precipitates, water baffles may also be used in select ponds. After adequate retention time, water leaves the treatment pond and is either pumped or gravity flows to a transfer pond where the water is aerated a second time allowing for additional oxidization and sedimentation. From the transfer pond, the water is then pumped, or gravity flows to a final pond where the water is retained and aerated once again before being discharged into the river.

Our ponds are lined with a 40 or 60-mil high-density polyethylene liner that has been fused at its seams and air tested by the installing contractor. A PGP company representative closely monitored the tests to ensure that each pond has impervious barrier (liner) to contain one hundred percent of all produced/process water within the PGP water handling system. Inspections of the condition of all facilities including pond liners are performed on a quarterly basis to ensure compliance with PGP's Best Management Practices Plan (BMP), Spill Prevention Control and Countermeasures Plan (SPCC), as well as all NPDES permit conditions. All ponds were certified and constructed using good sound engineering practices.

Each final POD is equipped with PH and flow meters for continuous monitoring of the water being discharged into the river. The ponds are also equipped with a remote telemetry unit (RTU) which monitors the water level in each pond. The RTU uses radio transmission to transfer information back to a computer in the main office. This allows operation personnel to call any pond at any time and check on its status. If an RTU loses power, it will utilize 24 Volt back up power and automatically call the pond system computer at the office and call via telephone the operator that is on call. The RTU will

continue to monitor their respective pond or POD on the battery backup system until power is restored. PGP uses mercury floats to monitor the water level in each pond. The operational purpose of a mercury float system is to provide two primary functions, and the first function is to maintain a consistent level of water within the pond. Secondly, the mercury floats trigger high and low water alarms which serve as a safety backup to the pond level controls. The mercury floats will activate an emergency callout feature that will notify operations personnel if activated. This alarm can be acknowledged via the pond system computer at the main office or by laptop for after hour call outs. Operations personnel are on 24-hour call and respond to all pond alarms within one hour.

Treated produced/process wastewater is discharged into the receiving water body via an "in-stream" diffuser installed perpendicular to the direction of stream flow. The diffuser is essentially a carrier pipe equipped with multiple nozzles to deliver the produced/process wastewater into the receiving water body in a manner that will ensure relatively quick mixing of the produced/process wastewater and the receiving water. The Maxwell Crossing permit utilizes one outfall, DSN-001E.

# Spill Prevention, Control, and Countermeasure Plan (SPCC)

## Brookwood Coalbed Methane Project

**Type of Facility: Coalbed Methane Gas Production Facilities**

**Owned by:**

**PGP Operating, LLC**
**17300 Brookwood Parkway**
**Vance, AL 35490**

**Operated by:**

**PGP Operating, LLC**
**17300 Brookwood Parkway**
**Vance, AL 35490**

**Revised date of plan:**
**January 18, 2018**

# TABLE OF CONTENTS


| | | Page |
|---|---|---|
| SPCC Plan - Management and Professional Engineer Certifications | | 2 |
| Applicability of Substantial Harm Criteria – Certification | | 3 |
| SPCC Plan - Sections | | |
| 1.0 | AMENDMENTS OF SPCC PLAN | 4 |
| 2.0 | ACTION ITEMS | 6 |
| 3.0 | PRIOR SPILL EVENTS | 6 |
| 4.0 | CONFORMANCE WITH 40 CFR PART 112.7 REQUIREMENTS | 7 |
| 5.0 | FACILITY DESCRIPTION, DISCHARGE PREVENTION, AND COUNTERMEASURES | 9 |
| 6.0 | FAULT ANALYSIS, SPILL POTENTIAL AND SECONDARY CONTAINMENT | 10 |
| 7.0 | INPECTIONS, TESTS, AND RECORDS | 11 |
| 8.0 | PERSONNEL, TRAINING, AND DISCHARGE PREVENTION PROCEDURES | 12 |
| 9.0 | SECURITY | 12 |
| 10.0 | TANK CAR AND TANK TRUCK LOADING/UNLOADING RACK | 13 |
| 11.0 | FIELD-CONSTRUCTED ABOVEGROUND STORAGE TANKS | 14 |
| 12.0 | COMPLIANCE WITH STATE AND OTHER REQUIREMENTS | 14 |
| 13.0 | DRILLING AND WORKOVER FACILITIES (ONSHORE) | 14 |

Appendix A Facility Inspection Procedures and Forms

Appendix B Spill Report Forms

Appendix C Annual SPCC Training & Briefing Record

Appendix D Notification List

Appendix E On-Site Tank and Containment Size

Appendix F Facility On-Site Tank Location Map

Appendix G Surface Flow Direction Map

## CERTIFICATIONS

The definition of an **Onshore Facility** as per 40 CFR 112.2, means "any facility of any kind located in, on, or under any land within the United States, other than submerged lands".

### Management Certification

This SPCC plan has been developed or reviewed by personnel under my supervision in accordance with 40 CFR Part 112.7. I have the authority to commit the necessary resources to fully implement this plan and any "action items" identified in the plan. The plan, including any future revisions and amendments, will be implemented as written.

Authorized Management Representative:

Signature: _____ Date: 4/1/19

### Professional Engineer Certification

In accordance with 40 CFR Part 112.3(d) (1), I hereby certify that I (or personnel under my direction) have visited and examined each facility, and being familiar with the requirements of 40 CFR Part 112, attest that this SPCC plan has been prepared in accordance with good engineering practices, including consideration of applicable industry standards, procedures for required inspections and testing have been established, and that the SPCC plan is adequate for each facility.

Professional Engineer:

Signature: _____ Date: 4/1/19

Registration Number: 12998

ALABAMA REGISTERED No. 12998 PROFESSIONAL ENGINEER JOHN K. HADDOCK

## APPLICABILITY OF SUBSTANTIAL HARM CRITERIA

Does the facility transfer oil over-water to or from vessels and does the facility have a total oil storage capacity greater than or equal to 42,000 gallons?

Yes No X

Does the facility have a total oil storage capacity greater than or equal to 1 million gallons and, within any storage area, does the facility lack secondary containment that is sufficiently large to contain the capacity of the largest aboveground oil storage tank plus sufficient freeboard to allow for precipitation?

Yes No X

Does the facility have a total oil storage capacity greater than or equal to 1 million gallons and is the facility located at a distance (as calculated using the appropriate formula in Appendix C of 40 CFR Part 112 or a comparable formula) such that a discharge from the facility could cause injury to fish and wildlife and sensitive environments?

Yes No X

Does the facility have a total oil storage capacity greater than or equal to 1 million gallons and is the facility located at a distance (as calculated using the appropriate formula in Appendix C of 40 CFR Part 112 or a comparable formula) such that a discharge from the facility would shut down a public drinking water intake?

Yes No X

Does the facility have a total oil storage capacity greater than or equal to 1 million gallons and has the facility experienced a reportable oil spill in an amount greater than or equal to 10,000 gallons within the last 5 years?

Yes No X

**CERTIFICATION**

**The facilities, covered under this SPCC plan, do not meet any of the above listed substantial harm criteria; therefore, no EPA Facility Response Plan (FRP) is required for any of the facilities.**

I certify under penalty of law that I (or personnel under my direction) have examined and am familiar with the information submitted in this document, and that based on my inquiry of those individuals responsible for obtaining information, I believe that the submitted information is true, accurate, and complete.

Signature: _____ Date: 3/14/19

Name: Mike Bretzke Title: General Superintendent

# 1.0 AMENDMENTS OF SPCC PLAN

## 1.1 Amendment of Plan by the EPA

**Regulatory Requirement:** *The EPA may require the facility to amend the plan if it finds that the plan does not meet the requirements of 40 CFR Part 112 or if amendment is necessary to prevent and to contain discharges of oil from the facility. A discharge into navigable waters may subject the facility to additional reporting requirements of 40 CFR 112.4 and EPA review. (40 CFR 112.4(a))*

**At this facility:** There has not been a discharge of more than 1,000 gallons (23.8 barrels) of oil in a single discharge or discharged more than 42 gallons (1 barrel) of oil in each of two discharges occurring within 12-month period into navigable waters.

## 1.2 Amendment of Plan by Owner/Operator

**Regulatory Requirement:** *Facility owner/operator must amend the SPCC Plan whenever there is a change that materially affects the facility's potential for discharge. Such amendments shall be fully implemented as soon as possible, but not later than six months after such change occurs. (40 CFR 112.5(a))*

*Facility owner/operator shall also complete a review and evaluation of the SPCC Plan at least once every five years. Facility personnel shall amend the SPCC Plan within six months of the review to include more effective prevention and control technology if such technology will significantly reduce the likelihood of a discharge from the facility and if such technology has been field proven at the time of review. (40 CFR 112.5(b))*

*Technical amendments must be certified and documented by a Professional Engineer. (40 CFR 112.5(c))*

*Such certification shall in no way relieve the owner or operator of its duty to prepare and fully implement this Plan. (40 CFR 112.3(d)(2))*

**At this facility:** The plan shall be reviewed, amended and updated as required. The required 5-year reviews and any technical amendments and updates, including adding new facilities will be recorded in the Record of Reviews, noted below:

## 1.3 Record of Reviews

| RECORD OF REVIEWS | | | | | |
|---|---|---|---|---|---|
| **Date of Review[1]** | **Will Plan Need Amendment?[2]** | | **Reviewer's Signature[3]** | **Reason for Amendment[4]** | **Date of Amendment (or N/A)** |
| | **Yes** | **No** | | | |
| **1/18/2018** | | **X** | | | |
| | | | | | |
| | | | | | |
| | | | | | |
| | | | | | |
| | | | | | |
| | | | | | |
| | | | | | |
| | | | | | |
| | | | | | |
| | | | | | |
| | | | | | |

(1) A full review of the plan must be performed at least once every 5 years.

(2) The SPCC plan must be amended when there is a change in the facility design, construction, operation, or maintenance that materially affects its potential for a discharge. Examples of technical amendments that are to be certified by a Professional Engineer include, but are not limited to: changing container or containment size; replacement, reconstruction, or movement of containers; reconstruction, replacement, or installation of piping systems; construction or demolition that might alter secondary containment structures; or revision of standard operation or maintenance procedures at a facility.

(3) Reviewer's signature indicates that he/she has completed review and evaluation of the SPCC plan for the facility on the date indicated and will or will not amend the plan as a result.

(4) Briefly describe reasons for plan amendment. These may include one or more of the reasons in footnote (2) above, and administrative changes or non-technical amendments such as updates to names or phone numbers, regulatory changes, or changes in company policies, do not require certification by a Professional Engineer.

## 2.0 ACTION ITEMS

**Regulatory Requirement:** *If the Plan calls for additional facilities or procedures, methods, or equipment not yet fully operational, discuss these items in separate paragraphs and explain separately the details of installation and operational startup. (40 CFR 112.7)*

**At this facility:** Action items are listed in the implementation schedule below. The Environmental Manager will enter the actual date of completion of each item. Completed action items will be removed from the list at the next Plan revision.

| ACTION ITEM IMPLEMENTATION SCHEDULE | | | |
|---|---|---|---|
| **Action Item** | **Responsible Person** | **Completion Deadline** | **Actual Date Completed** |
| 1. | | | |
| 2. | | | |
| 3. | | | |
| 4. | | | |
| 5. | | | |
| 6. | | | |
| 7. | | | |
| 8. | | | |
| 9. | | | |
| 10. | | | |

## 3.0 PRIOR SPILL EVENTS

**Regulatory Requirement:** *A facility that has experienced one or more reportable spills since August 16, 2002, should include a written description of each such spill, corrective action taken and plans for preventing recurrence. (40 CFR 112.4)*

**At this facility:** No reportable spills as described in 40 CFR 112.4(a) have occurred at this facility.

# 4.0 CONFORMANCE WITH 40 CFR PART 112.7 REQUIREMENTS

**Regulatory Requirement:** *Include a discussion of a facility's conformance with the requirements of 40 CFR 112.7. (40 CFR 112.7 (a) (1) and (2))*

**At this facility:** The following table indicates the applicability of the 40 CFR Part 112.7 requirements for this facility covered under this SPCC plan. The requirements, that are not applicable, are noted in the table below, but are not addressed in this SPCC Plan.

| REGULATORY APPLICABILITY (Yes or No) | | |
|---|---|---|
| **Citation** | **Description** | |
| **112.7** | **General requirements for SPCC Plans for all facilities and all oil types** | Yes |
| 112.7(a) | General requirements: discussion of facility's conformance with rule requirements; | |
| | deviations from Plan requirements; facility characteristics that must be described in | |
| | the Plan; spill reporting information in the Plan; emergency procedures | Yes |
| 112.7(b) | Fault analysis | Yes |
| 112.7(c) | Secondary containment | Yes |
| 112.7(d) | Contingency planning | No |
| 112.7(e) | Inspections, tests, and records | Yes |
| 112.7(f) | Employee training and discharge prevention procedures | Yes |
| 112.7(g) | Security | Yes |
| 112.7(h) | Loading/unloading (excluding offshore facilities) | Yes |
| 112.7(I) | Brittle fracture evaluation requirements | Yes |
| 112.7(j) | Conformance with State requirements | Yes |
| **112.8** | **Requirements for onshore facilities (excluding production facilities)** | No |
| 112.8(a) | General and specific requirements | No |
| 112.8(b) | Facility drainage | No |
| 112.8(c) | Bulk storage containers | No |
| 112.8(d) | Facility transfer operations, pumping, and facility process | No |
| **112.9** | **Requirements for onshore oil production facilities** | No |
| 112.9(a) | General and specific requirements | No |
| 112.9(b) | Oil production facility drainage | No |
| 112.9(c) | Oil production facility bulk storage containers | No |
| 112.9(d) | Facility transfer operations, oil production facility | No |
| **112.10** | **Requirements for onshore oil drilling and workover facilities** | Yes |
| 112.10(a) | General and specific requirements | Yes |
| 112.10(b) | Mobile facilities | Yes |
| 112.10(c) | Secondary containment - catchment basins or diversion structures | Yes |
| 112.10(d) | Blowout prevention (BOP) | Yes |

| REGULATORY APPLICABILITY (Yes or No) | | |
|---|---|---|
| **Citation** | **Description** | |
| **112.11** | **Requirements for offshore oil drilling, production, or workover facilities** | No |
| 112.11(a) | General and specific procedures | No |
| 112.11(b) | Facility drainage | No |
| 112.11(c) | Sump systems | No |
| 112.11(d) | Discharge prevention systems for separators and treaters | No |
| 112.11(e) | Atmospheric storage or surge containers; alarms | No |
| 112.11(f) | Pressure containers; alarm systems | No |
| 112.11(g) | Corrosion protection | No |
| 112.11(h) | Pollution prevention system procedures | No |
| 112.11(i) | Pollution prevention system; testing and inspection | No |
| 112.11(j) | Surface and subsurface well shut-in valves and devices | No |
| 112.11(k) | Blowout prevention | No |
| 112.11(l) | Manifolds | No |
| 112.11(m) | Flowlines, pressure sensing devices | No |
| 112.11(n) | Piping; corrosion protection | No |
| 112.11(o) | Sub-marine piping; environmental stresses | No |
| 112.11(p) | Inspections of sub-marine piping | No |

# 5.0 FACILITY DESCRIPTION, DISCHARGE PREVENTION, AND COUNTERMEASURES

**Regulatory Requirement:** *Describe the physical layout of the facility and include a facility diagram, which marks the location and contents of each container. The diagram must include completely buried tanks, transfer stations and connecting pipes. (40 CFR 112.7(a) (3))*

*Unless you have submitted a response plan under 40 CFR 112.20, provide information and procedures to enable a person reporting a discharge to relate the required information.*
*(40 CFR 112.7 (a) (4))*

*Unless you have submitted a response plan under 40 CFR 112.20, organize portions of the Plan describing procedures you will use when a discharge occurs in a way that will make them readily usable in an emergency. (40 CFR 112.7 (a) (5))*

**At this facility:** The facility covered under this plan is an onshore coalbed methane (CBM) gas production facility. Typically, this production facility produces CBM gas and/or produced water from the CBM gas wells. The produced fluids, from the wells, either flow naturally or are mechanically pumped to tank batteries, transfer ponds and/or treatment ponds through gathering lines. The tank batteries and transfer ponds are used to release gathering line pressures. Produced water is treated in treatment ponds and discharged according to PGP Operating NPDES Permits (AL0052264, AL0060798, AL0056791, AL0062430, AL0057037, and AL0060771). The CBM gas is compressed at 24 compressor stations and sold via pipelines. This Project has 28 facilities that have containers that are addressed in this plan.

Appendix E describes the onsite tanks and containment size. A facility diagram showing the location of each container is showed in Appendix F. The general surface flow direction and the area drainage topographic features for each location covered by this SPCC plan are included in Appendix G.

The discharge prevention measures including procedures for routine handling of products (loading, unloading areas, and facility transfers, etc.) and discharge or drainage controls such as secondary containment around containers and other structures, equipment, and procedures for the control of a discharge, are addressed in the separate sections of this plan.

In the event of a reportable spill, the Spill Report Form in Appendix B will be completed, and the spill should be reported to the appropriate contacts listed in Appendix D. At a minimum, all spills impacting navigable water ways should include reporting to the National Response Center, Alabama Department of Environmental Management, and the Alabama State Oil & Gas Board.

## 6.0 Fault Analysis, Spill Potential and Secondary Containment

**Regulatory Requirement:** *Where experience indicates a reasonable potential for equipment failure (such as loading or unloading equipment, tank overflow, rupture, or leakage), the plan should include a prediction of the direction, rate of flow, and a total quantity of oil which could be discharged from the facility as a result of each type of major equipment failure. (40 CFR 112.7(b))*

*Provide appropriate containment and/or diversionary structures or equipment to prevent a discharge as described in §112.1(b), except as provided in paragraph (k) of this section for qualified oil-filled operational equipment. One of the following preventive systems or its equivalent must be used as a minimum for onshore facilities: (40 CFR 112.7(c))*

- *Dikes, berms or retaining walls sufficiently impervious to contain oil;*
- *Curbing;*
- *Culverting, gutters or other drainage systems;*
- *Weirs, booms or other barriers;*
- *Spill diversion ponds;*
- *Retention ponds;*
- *Sorbent materials*

**At this facility:** For potential failure (such as tank or equipment overflow, rupture, or leakage), the spill potential and prediction drawings include, the predicted flow direction, and secondary containment and/or diversionary structures or equipment to prevent discharged oil/produced water from reaching navigable waters. The spill potential and prediction table for each location is located in Appendix G.

### 6.1 Contingency Plan

**Regulatory Requirement:** *When it is determined that the installation of structures or equipment listed to prevent discharged oil from reaching the navigable waters is not practicable from any onshore or offshore facility, the owner or operator should clearly demonstrate such impracticability. (40 CFR 112.7(d))*

**At this facility:** Secondary containment is considered practicable for all SPCC regulated storage tanks.

**Regulatory Requirement:** *If secondary containment is not practicable or if there are any action items included in this plan that require secondary containment evaluations, this facility will consider a strong spill contingency plan to be required as part of the SPCC Plan. (40 CFR 112.7(d) (1))*

*If a spill contingency plan is required for this facility, the plan will include a written commitment of manpower, equipment, and materials required to expeditiously control and remove any harmful quantity of oil discharged. (40 CFR 112.7(d) (2))*

**At this facility:** It is not practical to construct secondary containment for all flow, gathering or injection lines for wells and separators or to provide secondary containment for truck loading and unloading areas. A spill notification list is included in Appendix D.

# 7.0 INSPECTIONS, TESTS, AND RECORDS

**Regulatory Requirement:** *Inspections required by this regulation should be in accordance with written procedures developed for the facility by the owner/owner or by the certifying engineer. These written procedures and a record of the inspections, signed by the appropriate supervisor or inspector, should be made part of the SPCC Plan and maintained for period of three years. If the records are not made part of the Plan, a central location of the records should be documented in the Plan. (40 CFR 112.7(e))*

**At this facility:** Company field operator(s) will conduct routine inspections of facilities during each work visit. In addition, a documented annual facility inspection of each facility will be performed, as follows. *(Annual inspection forms and written inspection procedure are located in Appendix A)*

## 7.1 Routine Work Visit Inspections

Company field operator (s) will perform a general inspection of each facility under their responsibility on a routine basis.

Field drainage ditches, road ditches, and oil traps, sumps, or skimmers are inspected during work visits for accumulation of oil that may have escaped from small leaks. Any such accumulations will be removed and disposed of within regulatory guidelines.

Leaks and other problems observed during routine inspections will be reported to the appropriate production foreman for repairs or replacement and if needed with the Environmental Coordinator.

## 7.2 Annual Documented Inspections

The operations foreman and/or the Environmental Coordinator will perform a documented inspection of each facility annually, using the inspection form and instructions in Appendix A. The annual inspection will include examination of:

- all storage tanks, including the foundation and supports of tanks
- all production handling, separating and treating vessels
- all aboveground valves, pipelines, and gathering lines for general condition of items, such as flange joints, valve glands and bodies, drip pans, pipeline supports, bleeder and gauge valves
- secondary containment areas for oil storage and produced water.

These inspection sheets will be kept on file at the PGP Operating, Brookwood, Alabama office for not less than three years

Company field operator (s) and operations foreman will note any deficiencies or problems on the inspection form. The operations foreman and/or the Environmental Coordinator will address each item identified in the inspection and, if necessary, take corrective action. The resolution of problems and deficiencies identified in the annual inspection shall be documented and kept on file for at least three years.

# 8.0 PERSONNEL, TRAINING, AND DISCHARGE PREVENTION PROCEDURES

## 8.1 Personnel Training

**Regulatory Requirement:** *Owners or operators are responsible for properly instructing their personnel in the operation and maintenance of equipment to prevent the discharge of oil; discharge procedure protocols; applicable pollution control laws, rules and regulations; general facility operations; and, the contents of the facility SPCC Plan (40 CFR 112.7(f) (1))*

**At this facility:** The Environmental Coordinator will perform training classes on SPCC plans for company's personnel and Subcontractors. The training will include at a minimum, the operation and maintenance of equipment to prevent oil discharges, discharge procedure protocols and, the contents of the facility SPCC plan. Records of personnel receiving SPCC training will be documented and maintained for at least for three years. The SPCC training record form is included in Appendix C.

## 8.2 Designated Person

**Regulatory Requirement:** *Each applicable facility will have a designated person who is accountable for oil discharge prevention and who reports to facility management. (40 CFR 112.7(f) (2))*

**At this facility:** The field operator (s) assigned to each facility is responsible for the day-to-day operations and spill prevention at that facility. The operations foreman (who is the supervisor of the field operators) is the designated person who reports to facility management and is responsible for the proper cleanup of spills when they occur.

## 8.3 Spill Prevention Briefings

**Regulatory Requirement:** *Owners or operators will schedule and conduct spill prevention briefings for their oil-handling personnel at least once a year to assure adequate understanding of the SPCC plan for the facility. Such briefings should highlight and describe known discharges or failures, malfunctioning components, and recently developed precautionary measures. (40 CFR 112.7(f) (3))*

**At this facility:** The Environmental Coordinator will perform spill prevention briefings for the company's oil-handling personnel at least once a year. Such briefings will include past spills, failures, malfunctions and recently developed spill prevention measures. The record of personnel receiving the annual SPCC briefing and training will be documented on the training form in Appendix C.

# 9.0 SECURITY

**Regulatory Requirement:** Describe how you secure and control access to the oil handling processing and storage areas. *(40 CFR 112.7(g))*

At this production facility the compressor station facilities and waste-oil treatment facilities are fenced and locked. The field operator (s) assigned to each facility is responsible for oil handling processing. At this production facility the off-loading connections for the aboveground storage tanks are plugged/capped

when not in service or when in standby service for an extended time. All valves into or out of tanks will be in the closed position and plugged/capped when not in use.

## 10.0 TANK CAR AND TANK TRUCK LOADING/UNLOADING RACK

**Regulatory Requirement:** *Tank car and tank truck loading/unloading procedures should meet the minimum requirements and regulations established by the Department of Transportation (DOT).*

*Where rack area drainage does not flow into a catchment basin or treatment facility designed to handle spills, a quick drainage system should be used for tank truck loading and unloading areas. The containment system must be designed to hold at least the maximum capacity of any single compartment of a tank car or tank truck loaded or unloaded at the facility.*

*An interlocked warning light or physical barrier system, or warning signs, should be provided in loading/unloading areas to prevent vehicular departure before complete disconnect of flexible or fixed oil transfer lines.*

*Prior to filling and departure of any tank car or tank truck, the lowermost drain and all outlets of such vehicles will be closely examined for leakage, and if necessary, tightened, adjusted, or replaced to prevent liquid leakage while in transit. (40 CFR 112.7 (h))*

**At this facility:** It is not practical to provide secondary containment to hold at least the maximum capacity of any single compartment of truck loading and unloading at facilities where oil/produced water is transferred from tanks to trucks or trucks to tanks. The following procedures will be used for truck loading and unloading areas.

**All Truck Loading/Unloading Areas:** Truck drivers are warned not to depart before complete disconnect of transfer lines.

In addition, facility personnel will ensure that all loading and unloading procedures shall meet the minimum requirements of DOT; specifically:

- Vehicle engine is stopped
- Hand brake of vehicle is set
- No open flame in area

Buckets, catchments or portable drip pans will be placed under the hose connection at the truck and at the unloading pipe, as necessary, to catch any fluids that might drip or be spilled during the truck loading or unloading. Truck drivers will be instructed to use wheel chocks when a truck is stopped for loading and unloading operations. Truck drivers shall remain with their vehicle during loading or unloading to provide continuous visual inspection to prevent overfilling or accidental release.

Prior to filling and departure, the driver will be required to examine the lowermost drain and all outlets of the truck for leakage, and make any necessary adjustments or repairs, prior to departure.

## 11.0 FIELD-CONSTRUCTED ABOVEGROUND STORAGE TANKS

**Regulatory Requirement:** *If a field-constructed aboveground container undergoes a repair, alteration, reconstruction, or a change in service that might affect the risk of a discharge or failure due to brittle fracture or other catastrophe, or has discharged oil or failed due to brittle fracture failure or other catastrophe, evaluate the container for risk of discharge or failure due to brittle fracture or other catastrophe, and as necessary, take appropriate action. (40 CFR 112.7 (i))*

**At this facility:** Such evaluations will be conducted as needed.

## 12.0 COMPLIANCE WITH STATE AND OTHER REQUIREMENTS

**Regulatory Requirement:** *Include a complete discussion of conformance with the applicable requirements and other effective discharge prevention and containment procedures listed in this part or any applicable more stringent State rules, regulations, and guidelines. (40 CFR 112.7 (j))*

**At this facility:** This facility will comply with the Alabama Department of Environmental Management Rule 335-6-6-.12 (r) and with the Alabama State Oil and Gas Board Rule 400-3-6-.07.

## 13.0 DRILLING AND WORKOVER FACILITIES (ONSHORE)

### 13.1 Mobile Drilling or Workover Equipment

**Regulatory Requirement:** *Equipment should be positioned or located so as to prevent spilled oil from reaching navigable waters. (40 CFR 112.10 (a)-(b))*

**At this facility:** Mobile drilling and workover equipment will be positioned away from drainage ways as much as possible for the given operations. Each well pad location is basically an enclosed dike containment system that has stormwater turn outs. To help control a spill during drilling and completion of the well a sufficient amount of fill dirt is on the well pad.

### 13.2 Catchment Basins or Diversion Structures

**Regulatory Requirement:** *Depending on the location, catchment basins or diversion structures may be necessary to intercept and contain spills of fuel, crude oil or oily drilling fluids. (40 CFR 112.10 (c))*

**At this facility:** Catchment basins or diversion structures are provided for all drilling operations and on an as needed basis for workover operations.

## 13.3 Blowout Prevention

**Regulatory Requirement:** *Before drilling below any casing string or during workover operations, a blowout prevention (BOP) assembly and well control system will be installed that is capable of controlling any well head pressure that is expected to be encountered while that BOP assembly is on the well. Casing and BOP installations should be in accordance with State regulatory agency requirements. (40 CFR 112.10 (d))*

**At this facility:** BOP installed will be capable of controlling any wellhead pressures that may be encountered during drilling and well work operations.

# APPENDICES

# Appendix A

## Facility Inspection Procedures & Forms

## Facility Inspection Procedure

**Inspection Instructions:** Items to be inspected and documented in the Facility Inspection Form

1. Storage tanks:
   a. Examine foundation and supports of tanks that are above the surface of the ground. There should be no large gaps between the foundation and the tank bottom or between the ground surface and the tank bottom (if tank sits directly on the ground).
   b. Concrete foundations (if any) should not be crumbling or excessively cracked. Storage tank foundations should provide adequate support for tanks.
   c. Examine for leaks through bolts, gaskets, rivets, seams, and any other part of tank. Tanks should be structurally intact, with no cracks, holes, or leaks.
   d. Examine tanks for excessive rust and exterior corrosion.
   e. Examine sides of tanks for stain streaks, which is evidence of tank overfilling.

2. Production Handling, Separating, and Treating Vessels
   a. Inspect all valves, gauges, sight glass, and other related equipment for proper operation.

3. Valves and piping
   a. Examine all aboveground valves, pipelines, for general condition of items, such as flange joints, valve glands and bodies, drip pans, pipeline supports.
   b. Check truck loading and unloading areas, under loading valves and catchments for spills.

4. Flowlines:
   a. Inspect all valves for proper operation and condition.
   b. Inspect all joints, flanges, unions and connections for any indication of leaks.
   c. Walk flow or gathering lines and inspect for any indication of leaks, needed repairs or replacement.

5. Containment areas:
   a. Inspect for accumulations of oil or water inside containment.
   b. Examine containment walls for deterioration such as cracking, settlement, erosion, animal burrows or excessive vegetation.

## Facility Inspection Form

### Appendix B

# PGP Operating, LLC.
## Quarterly SPCC Inspection Report

**Facility:**_____ **Date:**_____

**Facility Status:**_____ **Project:** VA or OG

| Areas | Condition Satisfactory | Condition Unsatisfactory | Remarks |
|---|---|---|---|
| Supply Oil Storage | | | |
| Waste Oil Storage | | | |
| Chemical Storage | | | |
| Spill Control & Clean-up Equipment | | | |
| Security (Plugs & Locks) | | | |

_____
**Inspected By**

_____
**Environmental Regulatory Compliance Coordinator**
**(Lead Operator – Facilities)**
**Environmental File**

## PGP OPERATING Spill Report Form

**Date:**_____ **Time:**_____

**Location:** _____

_____

**Material and volume spilled:** _____

**Volume Recovered:** _____

**Methods used to contain and recover the material:** _____

_____

_____

_____

**Were waterways, wildlife, agricultural areas, residential areas, etc affected by the spill:**

**Yes** _____ **No** _____ **If so, name or describe affected areas:** _____

_____

**Were appropriate regulatory agencies notified:** **Yes** _____ **No** _____

**If so, who and when were they notified:**

| Person's Name | Agency | Date | Time |
|---|---|---|---|
| | | | |
| | | | |
| | | | |
| | | | |
| | | | |
| | | | |

# Appendix C

## SPCC TRAINING AND BRIEFING RECORD

INSTRUCTOR:_____

LOCATION:_____

DATE: _____

I have been instructed and trained in the operation and maintenance of equipment to prevent oil discharges; discharge procedure protocols; applicable pollution control laws (40 CFR Part 112), rules and regulations; general facility operations; and, in the use and contents of this SPCC plan.

| Name | Position | Date | Signature |
|---|---|---|---|
| | | | |
| | | | |
| | | | |
| | | | |
| | | | |
| | | | |
| | | | |
| | | | |
| | | | |
| | | | |
| | | | |
| | | | |
| | | | |
| | | | |
| | | | |
| | | | |
| | | | |

# Appendix D

## Oil Spill Notification List

Facility and management personnel are committed to implementing the manpower, equipment and materials required to expeditiously control and remove any harmful quantity of oil discharged from the facilities covered by this plan. Below is a notification list when taking initial response actions to a reportable spill.

| **Organization Notification Required for a Spill Event To Navigable Waters** | **Phone Number** | **Person Notified** | **Time Notified** |
|---|---|---|---|
| Spill Response Contractor<br>H & H Oil Field Services | (205)-349-9746 | | |
| Spill Response Contractor<br>Price Civil Service, Inc. | (205)-454-4747 | | |
| Spill Response Contractor<br>Action Environmental | (256)-352-2350 | | |
| National Response Center (NRC) | (800) 424-8802<br>(24 hrs) | | |
| Alabama Department of Environmental Management, B'Ham Field Office<br>(8-5 PM) | (205) 942-6168 | | |
| ADEM EMR (After hours) | 800-583-5560 | | |
| Scott Brasfield | Mobile 205-349-7388<br>Office 205-554-3137 | | |
| Louis Guidroz | Mobile 205-344-1881<br>Office 205-554-3107 | | |
| Mark Rose | Mobile 205-242-7328<br>Office 205-554-3133 | | |
| James Bishop | Mobile 205-960-8944<br>Office 205-554-3108 | | |
| Mike Bretzke | Mobile 205-614-2803<br>Office 205-554-3128 | | |

## Oil Spill Notification List (con't.)

| Organization Notification Performed As Appropriate | Phone Number | Person Notified | Time Notified |
|---|---|---|---|
| Local Emergency Response (Fire, EMS, Hazmat) | 911 *(or other number if appropriate)* | | |
| Fire Marshal | 911 | | |
| State Police | 911 | | |
| Weather Report | 945-7000 | | |
| Alabama State Oil & Gas Board | (205) 349-2852 | | |

# Appendix E

## On-Site Tank Inventory and Containment Size

## PGP Operating On-Site Tank inventory

| Site Designation Containment / Tank I.D. | Stored TankCapacity | 110% Stored Capacity | Spill Direction | Material stored | Containment Capacity Total | Containment Dimensions L x W x H |
|---|---|---|---|---|---|---|
| **VA-Compressor Station # 1** | | | | | | |
| Steel containment 1A | 285 gal | 316 gal | E | Eng. Oil | 342 gal | 6' x 4.5' x 1.7' |
| Steel containment 1B | 285 gal | 316 gal | E | Eng. Oil | 342 gal | 6' x 4.5' x 1.7' |
| Steel filter drain containment 1C | " | " | E | Used Oil | 342 gal | 6' x 4.5' x 1.7' |
| Steel containment 1D | 563 gal | 620 gal | E | Used Oil | 672 gal | 10' x 6' x 1.5' |
| Plastic containment 1E | 275 gal | 300 gal | E | Anti-Freeze | 664 gal | 7' x 4.7' x 2.7' |
| Steel containment 1F | 165 gal | 184 gal | E | Glycol | 342 gal | 6' x 4.5' x 1.7' |
| Concrete block containment 1G | 4,066 gal | 4,473 gal | E | Oil/Water | 4,704 gal | 29' x 9.3' x 2.3' |
| | | | | | | |
| **VA-Emulsion Treatment #1** | | | | | | |
| Concrete block containment 1A | 8,813 gal | 9,694 gal | E | Oil/Water | 3,890 gal | 16' x13' x 2.5' |
| Concrete block containment 1B | 8,813 gal | 9,694 gal | E | Oil/Water | 11,370 gal | 32' x 19' x 2.5' |
| Concrete block containment 1C | 8,813 gal | 9,694 gal | E | Oil/Water | " | " |
| Earthen containment 1D | 1,511 gal | 1,663 gal | E | Used Oil | 81,444 gal | 130' x 67' x 1.2' |
| Earthen containment 1E | 1,511 gal | 1,663 gal | E | Used Oil | " | " |
| Earthen containment 1F | 4,406 gal | 4,847 gal | E | Used Glycol | " | " |
| | | | | | | |
| **VA-Compressor Station # 2** | | | | | | |
| Steel containment 2A | 285 gal | 316 gal | W | Eng. Oil | 342 gal | 6' x 4.5' x 1.7' |
| Steel containment 2B | 596 gal | 662 gal | W | Used Oil | 728 gal | 10' x 6.5' x 1.5" |
| Steel containment 2C | 285 gal | 316 gal | W | Eng. Oil | 713 gal | 8' x 1.9' |
| Plastic containment 2D | 275 gal | 300 gal | W | Anti-Freeze | 664 gal | 7' x 4.7' x 2.7' |
| Steel filter drain containment 2E | " | " | W | Used Oil | 239 gal | 8'x 4' x 1' |
| Steel containment 2F | 285 gal | 316 gal | W | Eng. Oil | 342 gal | 6' x 4.5' x 1.7' |
| Steel Containment 2G | 165 gal | 184 gal | W | Glycol | 323 gal | 6' x 4.5' x 1.6' |
| Steel containment 2H | 285 gal | 316 gal | W | Eng. Oil | 713 gal | 8' x 1.9' |
| Concrete block containment 2I | 4,066 gal | 4,473 gal | W | Oil/Water | 4,704 gal | 29' x 9.3' x 2.3' |
| | | | | | | |
| **VA-Emulsion Station # 3** | | | | | | |
| Concrete block containment 3A | 4,242 gal | 4,666 gal | W | Oil/Water | 24,650 gal | 59' x 28' x 2' |
| Concrete block containment 3B | 4,242 gal | 4,666 gal | W | Oil/Water | " | " |
| Concrete block containment 3C | 4,066 gal | 4,473 gal | W | Oil/Water | " | " |
| Concrete block containment 3D | 4,406 gal | 4,847 gal | W | Oil/Water | " | " |
| Concrete block containment 3E | 548 gal | 603 gal | W | Glycol | " | " |
| Concrete block containment 3F | 245 gal | 269 gal | W | Glycol | " | " |
| Concrete containment 3G | 4,512 gal | 4,963 gal | W | Oil/Water | 5,026 gal | 18' x 16' x 2.3' |
| Concrete containment 3H | 4,066 gal | 4,473 gal | W | Oil/Water | 4,704 gal | 29' x 9.3' x 2.3' |

## PGP Operating On-Site Tank inventory

| Site Designation Containment / Tank I.D. | Stored Tank Capacity | 110% Stored Capacity | Spill Direction | Material stored | Containment Capacity Total | Containment Dimensions L x W x H |
|---|---|---|---|---|---|---|
| **VA-Compressor Station #4** | | | | | | |
| Concrete block containment 4A | 4,066 gal | 4,473 gal | W | Oil/Water | 6,598 gal | 29' x 10' x 3' |
| Steel filter drain containmnet 4B | " | " | W | Used Oil | 239 gal | 8' x 4'x 1' |
| Steel containment 4C | 287 gal | 319 gal | W | Used Oil | 443 gal | 6' x4.5' x 2.2' |
| Steel containment 4D | 285 gal | 316 gal | W | Eng. Oil | 342 gal | 6' x 4.5' x 1.7' |
| Plastic containment 4E | 275 gal | 300 gal | W | Anti-Freeze | 664 gal | 7' x 4.7' x 2.7' |
| Steel containment 4F | 165 gal | 184gal | W | Glycol | 342 gal | 6' x 4.5' x 1.7' |
| | | | | | | |
| **VA-Compressor Station #5** | | | | | | |
| Steel containment 5A | 285 gal | 316 gal | SE | Eng. Oil | 342 gal | 6' x 4.5' x 1.7' |
| Steel filter drain containmnet 5B | " | " | W | Used Oil | 239 gal | 8' x 4'x 1' |
| Steel containment 5C | 575 gal | 638 gal | SE | Used Oil | 672 gal | 10' x 5.9' x 1.4' |
| Steel containment 5D | 285 gal | 316 gal | SE | Eng. Oil | 342 gal | 6' x 4.5' x 1.7' |
| Plastic containment 5E | 275 gal | 300 gal | SE | Anti-Freeze | 664 gal | 7' x 4.7' x 2.7' |
| Steel containment 5F | 165 gal | 184 gal | SE | Glycol | 342 gal | 6' x 4.5' x 1.7' |
| Concrete block containment 5G | 4,066 gal | 4,473 gal | SE | Oil/Water | 5,058 gal | 29' x 10' x 2.3' |
| | | | | | | |
| **VA-Compressor Station #6** | | | | | | |
| Steel containment 6A | 285 gal | 316 gal | W | Eng. Oil | 342 gal | 6' x 4.5' x 1.7' |
| Steel containment 6B | 589 gal | 654 gal | W | Used Oil | 672 gal | 10' x 6' x 1.5' |
| Plastic containment 6C | 275 gal | 300 gal | W | Anti-Freeze | 664 gal | 7' x 4.7' x 2.7' |
| Steel filter drain containment 6D | " | " | W | Used Oil | 239 gal | 8'x 4' x 1' |
| Steel containment 6E | 285 gal | 316 gal | W | Oil | 342 gal | 6' x 4.5' x 1.7' |
| Steel containment 6F | 165 gal | 184 gal | W | Glycol | 342 gal | 6' x 4.5' x 1.7' |
| Concrete block containment 6G | 4,066 gal | 4,473 gal | W | Oil/Water | 5,058 gal | 29' x 10' x 2.3' |
| | | | | | | |
| **VA-Compressor Station #11** | | | | | | |
| Steel containment 11A | 600 gal | 330 gal* | W | Glycol | 342 gal | 6' x 4.5' x 1.7' |
| Steel containment 11B | 285 gal | 316 gal | W | Eng. Oil | 342 gal | 6' x 4.5' x 1.7' |
| Plastic containment 11C | 275 gal | 300 gal | W | Anti-Freeze | 664gal | 7' x 4.7' x 2.7' |
| Steel filter drain containment | 55 gal | 61 gal | W | Injector Oil | 239 gal | 8' x 4' x 1' |
| Concrete block containment 11E | 4,066 gal | 4,473 gal | W | Oil/Water | 4,937 gal | 30' x 11' x 2' |
| * only fill to 300 gallons | | | | | | |
| | | | | | | |

## PGP Operating On-Site Tank inventory

| Site Designation Containment / Tank I.D. | Stored Tank Capacity | 110% Stored Capacity | Spill Direction | Material stored | Containment Capacity Total | Containment Dimensions L x W x H |
|---|---|---|---|---|---|---|
| **VA-Compressor Station #12** | | | | | | |
| Steel containment 12A | 285 gal | 316 gal | E | Eng. Oil | 342 gal | 6' x 4.5' x 1.7' |
| Plastic containment 12B | 275 gal | 300 gal | E | Anti-Freeze | 664 gal | 7' x 4.7' x 2.7' |
| Steel containment 12C | 55 gal | 61 gal | E | Injector Oil | 239 gal | 8' x 4'x 1' |
| Steel containment 12D | 285 gal | 316 gal | E | Eng. Oil | 342 gal | 6' x 4.5' x 1.7' |
| Steel containment 12E* | 600 gal | 660 gal* | E | Glycol | 342 gal | 6' x 4.5' x 1.7' |
| Concrete block containment 12F | 4,066 gal | 4,473 gal | E | Oil/Water | 4,937 gal | 30' x 11' x 2' |
| * only fill to 300 gallons | | | | | | |
| | | | | | | |
| **VA-Compressor Station #13** | | | | | | |
| Steel containment 13A | 165 gal | 184 gal | NE | Glycol | 342 gal | 6' x 4.5' x 1.7' |
| Plastic Containment 13B | 275 gal | 300 gal | NE | Antifreeze | Needs Cont. | Needs Cont. |
| Steel containment 13C | 285 gal | 316 gal | NE | Oil | 342 gal | 6' x 4.5' x 1.7' |
| Concrete block containment 13D | 4,066 gal | 4,473 gal | NE | Oil/Water | 4,937 gal | 30' x 11' x 2' |
| Steel Containment 13E | 55 gal | 61 gal | NE | Injector Oil | 342 gal | 6' x 4.5'x 1.7' |
| | | | | | | |
| **VA-Compressor Station #14** | | | | | | |
| Steel Containment/Filter Drain 14A | " | " | E | Waste Oil | 240 gal | 8.2' x 4'x 1' |
| Steel containment 14B | 275 gal | 300 gal | E | Anti-Freeze | 713 gal | 8' x 1.9' |
| Steel containment 14C | 285 gal | 316 gal | E | Oil | 713 gal | 8' x 1.9' |
| Concrete block containment 14D | 4,066 gal | 4,473 gal | E | Oil/Water | 4,937 gal | 30' x 11' x 2' |
| Steel Containment 14E | 563 gal | 624 gal | E | Glycol | 672 gal | 9' x 5' x2' |
| | | | | | | |
| **VA- Vance Yard** | | | | | | |
| Concrete containment V1 | 275 gal | 300 gal | SE | Gear Oil | 4545 gal | 39' x 39' x 0.4' |
| Concrete containment V2 | 275 gal | 300 gal | SE | Gear Oil | " | " |
| Concrete containment V3 | 275 gal | 300 gal | SE | Gear Oil | " | " |
| Concrete containment V4 | 300 gal | 330 gal | SE | Scale Inhibit | " | " |
| Concrete containment V5 | 575 gal | 638 gal | SE | Diesel | " | " |
| Earthen Containment V6 | 3,007 gal | 3,338 gal | SE | Used Glycol | 3,697 gal | 30' x 11' x 1.5' |
| | | | | | | |
| **VA-Compressor Station #22** | | | | | | |
| Steel containment 22A | 285 gal | 316 gal | SW | Eng. Oil | 342 gal | 6' x 4.5' x 1.7' |
| Steel filter drain containment 22B | " | " | SW | Used oil | 239 gal | 8' x 4'x 1' |
| Plastic containment 22C | 275 gal | 300 gal | SW | Anti-Freeze | 664 gal | 7' x 4.7' x 2.7' |
| Steel containment 22D | 165 gal | 184 gal | SW | Glycol | 342 gal | 6' x 4.5' x 1.7' |
| Concrete block containment 22E | 4,066 gal | 4,473 gal | SW | Oil/Water | 11,355 gal | 30' x 11' x 4.6' |

# PGP Operating On-Site Tank Inventory

| Site Designation Containment / Tank I.D. | Stored Tank Capacity | 110% Stored Capacity | Spill Direction | Material stored | Containment Capacity Total | Containment Dimensions L x W x H |
|---|---|---|---|---|---|---|
| **VA-Compressor Station #31** | | | | | | |
| Steel containment 31A | 285 gal | 316 gal | N | Eng. Oil | 729 gal | 10' x 6.5' x 1.5' |
| Steel containment 31B | 575 gal | 632 gal | N | Used Oil | 673 gal | 10' x 6' x 1.5' |
| Plastic containment 31C | 275 gal | 300 gal | W | Anti-Freeze | 664 gal | 7' x 4.7' x 2.7' |
| Earthen containment 31D | 500 gal | 550 gal | W | Scale inhibit | 1,700 gal | 20' x12' x 1' |
| Earthen containment 31D | 4,400 gal | 4,840 gal | W | Oil/Water | 15,754 gal | 52' x27' x 1.5' |
| Earthen containment 31E | 4,400 gal | 4,840 gal | W | Oil/Water | " | " |
| Earthen containment 31F | 845 gal | 930 gal | W | Used Oil | " | " |
| Steel containment 31G | 165 gal | 184 gal | W | Glycol | 729 gal | 10' x 6.5' x 1.5' |
| | | | | | | |
| **VA-Compressor Station #32** | | | | | | |
| Concrete containment 32A | 575 gal | 638 gal | E | Used Oil | 1,457 gal | 20' x 6.5' x 1.5' |
| Plastic containment 32B | 275 gal | 300 gal | E | Anti-Freeze | 664 gal | 7' x 4.7' x 2.7' |
| Steel containment 32C | 285 gal | 316 gal | E | Eng. Oil | 342 gal | 6' x 4.5' x 1.7' |
| Earthen containment 32D | 845 gal | 929 gal | N | Used Oil | 20,871 gal | 55' x 20' x 2.5' |
| Earthen containment 32E | 4,400 gal | 4,840 gal | N | Oil/Water | " | " |
| Earthen containment 32F | 4,400 gal | 4,840 gal | N | Oil/Water | " | " |
| Earthen containment 32G | 4,406 gal | 4,847 gal | SW | Glycol/Water | 4,940 gal | 21' x 21' x 1.5' |
| Concrete containment 32H | 200 gal | 220 gal | SW | Glycol | 1310 gal | 10' x 6.5' x 1.5' |
| | | | | | | |
| **VA-Compressor Station #33** | | | | | | |
| Earthen containment 33A | 4,400 gal | 4,840 gal | E | Oil/Water | 13,353 gal | 30' x 17' x 3.5' |
| Earthen containment 33B | 845 gal | 929 gal | E | Used Oil | " | " |
| Earthen containment 33C | 4,400 gal | 4,840 gal | E | Oil/Water | ." | " |
| Steel containment 33D | 165 gal | 184 gal | E | Glycol | 342 gal | 6' x 4.5' x 1.7' |
| Plastic containment 33E | 275 gal | 300 gal | E | Anti-Freeze | 664 gal | 7' x 4.7' x 2.7' |
| Steel containment 33F | 285 gal | 316 gal | E | Eng. Oil | 342 gal | 6' x 4.5' x 1.7' |
| | | | | | | |
| **VA-Compressor Station #34** | | | | | | |
| Concrete containment 34A | 285 gal | 300 gal | SW | Eng. Oil | 728 | 10' x 6.5' x 1.5' |
| Plastic containment 34B | 275 gal | 300 gal | SW | Anti-Freeze | 664 gal | 7' x 4.7' x 2.7' |
| Earthen containment 34C | 845 gal | 929 gal | SW | Used Oil | 42,011gal | 60' x 36' x 2.6' |
| Earthen containment 34D | 4,406 gal | 4,847 gal | SW | Oil/Water | " | " |
| Earthen containment 34E | 4,406 gal | 4,847 gal | SW | Oil/Water | " | " |
| Earthen containment 34F | 4,406 gal | 4,847 gal | SW | Used Glycol | 19,483 gal | 27' x 23' x 4.2' |
| Steel containment 34G | 316 gal | 347 gal | SW | Glycol | 353 gal | 7.5' x 4.5' x 1.5' |
| Concrete containment 34H | 300 gal | 330 gal | SW | Corr. Inh. | 681 | 10' x 6.5' x 1.5' |
| | | | | | | |
| **VA-Delivery Station #36** | | | | | | |
| Steel containment 36A | 563 gal | 624 gal | SE | Glycol | 672 gal | 9'x 5'x 2' |
| Earthen containent 36B | | | SE | Oil/Water | | |

# PGP Operating On-Site Tank Inventory

| Site Designation Containment / Tank I.D. | Stored Tank Capacity | 110% Stored Capacity | Spill Direction | Material stored | Containment Capacity Total | Containment Dimensions L x W x H or D x H |
|---|---|---|---|---|---|---|
| **OG-Compressor Station #2** | | | | | | |
| Plastic containment 2A | 275 gal | 300 gal | SW | Anti-Freeze | 664 gal | 7' x 4.7' x 2.7' |
| Steel containment 2B | 285 gal | 316 gal | SW | Eng. Oil | 342 gal | 6' x 4.5' x 1.7' |
| Steel containment 2C | 275 gal | 300 gal | SW | Anti-Freeze | 713 gal | 8' x 1.9' |
| Steel containment 2D | 285 gal | 316 gal | SW | Engine Oil | 661 gal | 7.7' x 1.9' |
| Steel containment 2E | 285 gal | 316 gal | SW | Screw Oil | 713 gal | 8' x 1.9' |
| Concrete block containment 2F | 548 gal | 602 gal | SW | Used Oil | 7,745 gal | 22' x 21' x 2.2' |
| Steel containment 2G | 165 gal | 184 gal | SW | Glycol | 342 gal | 6' x 4.5' x 1.7' |
| Concrete block containment 2H | 4,094 gal | 4,503 gal | SW | Oil/Water | 4,835 gal | 29' x 9.5' x 2.3' |
| | | | | | | |
| **OG-Compressor Station #3** | | | | | | |
| Steel containment 3A | 285 gal | 316 gal | NE | Engine Oil | 610 gal | 7.3' x 1.9' |
| Steel containment 3B | 285 gal | 316 gal | NE | Screw Oil | 706 gal | 7.75' x 2' |
| Steel containment 3C | 285 gal | 316 gal | NE | Engine Oil | 342 gal | 6.0' x 4.5' x 1.7' |
| Steel containment 3D | 330 gal | 363 gal | NE | Anti-Freeze | 661 gal | 7.7' x 1.9' |
| Steel containment 3E | 330 gal | 363 gal | NE | Anti-Freeze | 661 gal | 7.7' x 1.9' |
| Steel containment 3F | 520 gal | 572 gal | NE | Used Oil | 670 gal | 8' x 5.6' x 2.0' |
| Steel containment 3G | 165 gal | 184 gal | NE | Glycol | 342 gal | 6' x 4.5' x 1.7' |
| Concrete block containment 3H | 4,094 gal | 4,503 gal | NE | Oil/Water | 4,835 gal | 29' x 9.5' x 2.3' |

# PGP Operating On-Site Tank Inventory

| | | | | | | |
|---|---|---|---|---|---|---|
| **OG-Compressor Station #4** | | | | | | |
| Steel containment 4A | 285 gal | 316 gal | S | Screw Oil | 342 gal | 6.0' x 4.5' x 1.7' |
| Steel containment 4B | 580 gal | 638 gal | S | Engine Oil | 713 gal | 8.0' x 1.9' |
| Steel containment 4C | 330 gal | 363 gal | S | Anti-Freeze | 964 gal | 9.3' x 1.9' |
| Steel containment 4D | 285 gal | 316 gal | S | Used Oil | 603 gal | 8' x 5.5' x 1.8' |
| Steel containment 4E | 165 gal | 184 gal | S | Glycol | 342 gal | 6' x 4.5' x 1.7' |
| Concrete block containment 4F | 4,094 gal | 4,503 gal | S | Oil/Water | 4,835 gal | 29' x 9.5' x 2.3' |
| | | | | | | |
| **O-G Gas Treatment Station#4-6** | | | | | | |
| Concrete Containment 4-6A | 4,200 gal | 4,662gal | S | Oil/Water | 5,141 gal | 18.4' x 18.7' x 2' |
| Steel Containment 4-6B | 165 gal | 184 gal | S | Glycol | 342 gal | 6' x 4.5' x 1.7' |
| | | | | | | |
| **OG-Compressor Station #5** | | | | | | |
| Steel containment 5A | 285 gal | 316 gal | SE | Engine Oil | 644 gal | 7.6' x 1.9' |
| Steel containment 5B | 285 gal | 316 gal | SE | Screw Oil | 644 gal | 7.6' x 1.9' |
| Steel containment 5C | 285 gal | 316 gal | SE | Anti-Freeze | 540 gal | 7.0' x 1.9' |
| Steel containment 5D | 580 gal | 638 gal | SE | Used Oil | 658 gal | 8.0' x 5.5' x 2.0' |
| Steel containment 5E | 165 gal | 184 gal | SE | Glycol | 342gal | 6.0' x 4.5' x 1.7' |
| Concrete block containment 5F | 4,024 gal | 4,426 gal | SE | Oil/Water | 4,835 gal | 29' x 9.5' x 2.3' |
| | | | | | | |
| **OG-Emulsion Treatment #6** | | | | | | |
| Concrete containment 6A | 4,512 gal | 4,963 gal | NW | Oil/Water | 13,884 gal | 37' x 25' x 2' |
| Concrete containment 6B | 4,512 gal | 4,963 gal | NW | Oil/Water | " | " |
| Concrete containment 6C | 4,512 gal | 4,963 gal | NW | Oil/Water | " | " |
| Concrete block containment 6D | 3,940 gal | 4,334 gal | NW | Oil/Water | 4,690 gal | 29.3' x 9.5' x 2.2' |

## PGP Operating On-Site Tank Inventory

| Site Designation Containment / Tank I.D. | Stored Tank Capacity | 110% Stored Capacity | Spill Direction | Material stored | Containment Capacity Total | Containment Dimensions L x W x H |
|---|---|---|---|---|---|---|
| **OG-Compressor Station #7** | | | | | | |
| Steel containment 7A | 285 gal | 316 gal | W | Screw Oil | 713 gal | 8.0' x 1.9' |
| Steel containment 7B | 385 gal | 316 gal | W | Engine Oil | 713 gal | 8.0' x 1.9' |
| Steel containment 7C | 275 gal | 300gal | W | Anti-Freeze | 713 gal | 8.0' x 1.9' |
| Steel containment 7D | 275 gal | 300gal | W | Anti-Freeze | 713 gal | 8.0' x 1.9' |
| Compressor pad containment 7E | 548 gal | 603 gal | W | Used Oil | 13,445 gal | 90' x 40' x .5' |
| Earthen containment 7F | 8,812 gal | 19,386 gal | W | Oil/Water | 19,548 gal | 56' x 28' x 1.6' |
| Earthen containment 7G | 8,812 gal | 19,386 gal | W | Oil/Water | 19,548 gal | 56' x 28' x 1.6' |
| Concrete block containment 7H | 515 gal | 566 gal | W | Glycol | 862 gal | 9.3' x 2.3' x 1.6' |
| | | | | | | |
| **OG-Treatment Station #7-8** | | | | | | |
| Concrete Containment 7-8A | 4,200 gal | 4,662 gal | SW | Oil/Water | 4,404 gal | 18.2' x 16.2' x 2' |
| Steel Containment 7-8B | 165 gal | 184 gal | SW | Glycol | 664 gal | 7' x 4.7' x 2.7' |
| | | | | | | |
| **OG-Compressor Station #8** | | | | | | |
| Steel containment 8A | 285 gal | 316 gal | S | Screw Oil | 713 gal | 8.0' x 1.9' |
| Steel containment 8B | 275 gal | 300 gal | S | Antifreeze | 713 gal | 8.0' x 1.9' |
| Compressor pad containment 8C | 285 gal | 316 gal | S | Engine Oil | 13,445 gal | 90' x 40' x .5' |
| Compressor pad containment 8D | 285gal | 316 gal | S | Engine Oil | 13,445 gal | 90' x 40' x .5' |
| Compressor pad containment 8E | 580 gal | 644 gal | S | Used Oil | 13,445 gal | 90' x 40' x .5' |
| Steel containment 8F | 285 gal | 316 gal | S | Engine Oil | 713 gal | 8.0' x 1.9' |
| Plastic containment 8G | 275 gal | 300 gal | S | Anti-Freeze | 664 gal | 7'x 4.7''x 2.7' |
| Concrete block containment 8H | 564gal | 620 gal | S | Diesel | 560 gal | 8.7' x 3.6' x 2.2' |
| Earthen containment 8I | 8,812gal | 9,693 gal | S | Oil/Water | 14,500 gal | 65' x 20' x 1.5' |
| Earthen containment 8J | 8,812gal | 9,693 gal | S | Oil/Water | 14,500 gal | 65' x 20' x 1.5' |
| Concrete block containment 8K | 515 gal | 566 gal | S | Glycol | 862 gal | 9.3' x 2.3' x 1.6' |
| | | | | | | |
| **OG-Compressor Station #10** | | | | | | |
| Earthen containment 10A | 564gal | 620gal | SE | Diesel | 723 gal | 8.5' x 10.5' x 1.1' |
| Glycol Tank Containment 10B | 165 gal | 184 gal | SE | Glycol | 342 gal | 6' x 4.5' x 1.7' |
| Earthen Containment 10C | 579 gal | 643 gal | SE | Eng. oil | 874 gal | 13'x 9'x 1' |
| Steel Containment 10D | 285 gal | 316 gal | SE | Eng. oil | 427 gal | 5.6'x 6' x 1.7' |
| Plastic Containment 10E | 275 gal | 300 gal | SE | Antifreeze | 664 gal | 7'x 4.7'x 2.7' |
| Compressor Pad Containment 10F | 275 gal | 316 gal | SE | Antifreeze | 16,800 gal | 36'x 37'x 1.2' |
| Steel Containment 10G | 275 gal | 300 gal | SE | Eng. Oil | 427 gal | 5.6' x 6' x 1.7' |
| Compressor Pad Containment 10H | 563gal | 664 gal | SE | Used Oil | 16,800 gal | 90' x 50' x .5' |
| Earthen containment 10I | 8,910gal | 9,801gal | SE | Oil/Water | 11,377gal | 26' x 27' x 2.2' |
| Earthen containment 10J | 10,575gal | 11,632 gal | SE | Oil/Water | 12,454 gal | 36' x 37' x 1.2' |

## PGP Operating On-Site Tank inventory

| Site Designation Containment / Tank I.D. | Stored Tank Capacity | 110% Stored Capacity | Spill Direction | Material stored | Containment Capacity Total | Containment Dimensions L x W x H |
|---|---|---|---|---|---|---|
| **OG-Treatment Station #10-10** | | | | | | |
| Steel containment 10-10A | 165 gal | 184 gal | S | Glycol | 342 gal | 6' x 4.5' x 1.7' |
| Concrete containment 10-10B | 4,200 gal | 4,662 gal | S | Oil/Water | 5,141 gal | 18.7' x 18.4' x 2' |
| | | | | | | |
| **OG-Compressor Station #11** | | | | | | |
| Earthen containment 11A | 564 gal | 620 gal | W | Diesel | 672 gal | 14' x 7' x 1' |
| Compressor pad containment 11B | 285 gal | 316 gal | W | Eng. Oil | 16,800 gal | 90' x 50' x .5' |
| Compressor pad containment 11C | 563 gal | 625 gal | W | Used Oil | 16,800 gal | 90' x 50' x .5' |
| Compressor pad containment 11D | 285 gal | 316 gal | W | Eng. Oil | 16,800 gal | 90' x 50' x .5' |
| Earthen containment 11E | 8,812 gal | 9,693 gal | W | Oil/Water | 14,608 gal | 27'x 28'x 2.6' |
| Earthen containment 11F | 12,690 gal | 13,959 gal | W | Oil/Water | 16,755 gal | 35' x 32' x 2' |
| Steel Containment 11G | 563 gal | 625 gal | W | Glycol | | |
| | | | | | | |
| **OG-Compressor Station #12** | | | | | | |
| Steel containment 12A | 165 gal | 182 gal | SW | Glycol | 342 gal | 6' x 4.5' x 1.7' |
| Compressor pad containment 12B | 285 gal | 300 gal | SW | Eng. Oil | 16,800 gal | 90' x 50' x .5' |
| Plastic containment 12C | 275 gal | 300 gal | SW | Anti-Freeze | 664 gal | 7' x 4.7' x 2.7' |
| Earthen containment 12D | 8,812 gal | 9,693 gal | SW | Oil/Water | 11,688 gal | 25' x 25' x 25' |
| Compressor pad containment 12E | 509 gal | 560 gal | SW | Used Oil | 16,800 gal | 90' x 50' x .5' |
| Earthen containment 12F | 12,690 gal | 13,959 gal | SW | Oil/Water | 14,661 gal | 30' x 28' x 2.3' |
| | | | | | | |
| **OG-Treatment Station #12-11** | | | | | | |
| Concrete Containment 12-11A | 4,200 gal | 4,662 gal | N | Oil/Water | 4,407 gal | 18' x 16.3' x 2 |
| Steel Containment 12-11B | 165 gal | 184 gal | N | Glycol | 342 gal | 6' x 4.5' x 1.7' |
| | | | | | | |
| **OG-Compressor Station #15** | | | | | | |
| Steel containment 15A | 285 gal | 316gal | N | Screw Oil | 661 gal | 7.7'x 1.9' |
| Steel containment 15B | 275 gal | 300 gal | N | Antifreeze | 661 gal | 7.7' x 1.9' |
| Steel containment 15C | 275 gal | 300 gal | N | Antifreeze | 661 gal | 7.7' x 1.9' |
| Steel containment 15D | 285 gal | 300 gal | N | Eng. Oil | 661 gal | 7.7' x 1.9' |
| Steel containment 15E | 165 gal | 184 gal | N | Glycol | 342 gal | 6' x 4.5' x 1.7' |
| Concrete containment 15F | 4,500 gal | 4,950 gal | N | Oil/Water | 18,700 gal | 50' x 25' x 2' |
| Concrete containment 15G | 4,500 gal | 4,950 gal | N | Oil/Water | " | " |
| Concrete containment 15H | 4,500 gal | 4,950 gal | N | Oil/Water | " | " |
| Concrete containment 15I | 4,500 gal | 4,950 gal | N | Oil/Water | " | " |
| | | | | | | |
| **OG-Treatment Station #15-1** | | | S | | | |
| Concrete containment 15-1A | 4,200 gal | 4,662 gal | S | Oil/Water | 5,224 gal | 18.7' x 18.7' x 2' |
| | | | | | | |

# Appendix F

## Facility On-Site Tank Location Map

## Appendix G

## Surface Flow Direction Map

DISTANCE TO NEAREST WATERWAY

| LOCATION | FACILITY STATION | DISTANCE (FEET) | BODY OF WATER |
|---|---|---|---|
| VANCE | NO. 1 | 1,700 | HURRICANE CREEK |
| VANCE | EMULSION TREATMENT FACILITY #1 | 1,700 | HURRICANE CREEK |
| VANCE | NO. 2 | 1,000 | BLACK CREEK |
| VANCE | EMULSION TREATMENT FACILITY #3 | 400 | UN-NAMED TRIBUTARY TO HURRICANE CREEK |
| VANCE | NO. 4 | 850 | UN-NAMED TRIBUTARY TO HURRICANE CREEK |
| VANCE | NO. 5 | 900 | UN-NAMED TRIBUTARY TO HURRICANE CREEK |
| VANCE | NO. 6 | 1,200 | TRIBUTARY TO ROCKY BRANCH |
| CDM | NO. 11 | 500 | LYE BRANCE |
| CDM | NO. 12 | 1,200 | LYE BRANCH |
| CDM | NO. 13 | 400 | HORSE CREEK |
| CDM | NO. 14 | 1,000 | DARDEN BRANCH |
| VANCE | NO. 22 | 3,300 | LYE BRANCH |
| COTTONDALE | NO. 31 | 600 | UNNAMED TRIBUTARY TO BEE BRANCH |
| COTTONDALE | NO. 32 | 500 | UNNAMED TRIBUTARY TO LITTLE FLINT BRANCH |
| COTTONDALE | NO. 33 | 600 | UNNAMED TRIBUTARY TO COTTONDALE CREEK |
| COTTONDALE | NO. 34/ WWTF NO. 5052 | 300 | UNNAMED TRIBUTARY TO BUNCH CREEK |
| COTTONDALE | NO. 36 | 700 | UNNAMED POND |
| COTTONDALE | MAXWELL CROSSING WWTF NO. 5053 | 600 | KINGS BRANCH |

## Surface Flow Direction Map

DISTANCE TO NEAREST WATERWAY

| LOCATION | COMPRESSOR STATION | DISTANCE (FEET) | BODY OF WATER |
|---|---|---|---|
| OAK GROVE | NO. 2 | 3,200 | WOODS CREEK |
| OAK GROVE | NO. 3 | 5,300 | WOODS CREEK |
| OAK GROVE | NO. 4 | 3,100 | VALLEY CREEK |
| OAK GROVE | NO. 5 | 8,000 | MUD CREEK |
| OAK GROVE | EMULSION TREATMENT FACILITY # 6 | 2,300 | JESS BRANCH |
| OAK GROVE | NO. 7 | 2,300 | DRY BRANCH |
| OAK GROVE | NO. 7-8 | 275 | BEAR BRANCH |
| OAK GROVE | NO. 8 | 4,100 | LICK CREEK |
| OAK GROVE | NO. 15 | 2,000 | CORBEL BRANCH |
| TOGA | NO. 10 | 2,300 | SHOAL CREEK |
| TOGA | NO. 10-10 | 2,500 | UNNAMED POND |
| TOGA | NO. 11 | 1,200 | UNNAMED TRIBUTARY TO DAVIS CREEK |
| TOGA | NO. 11-12 | 550 | Nathan Branch |
| TOGA | NO. 12 | 600 | NATHAN BRANCH |
| Bayview | NO. 15 | 1,500 | Bayview Lake |
| Bayview | NO. 15-1 | 3,375 | Bayview Lake |

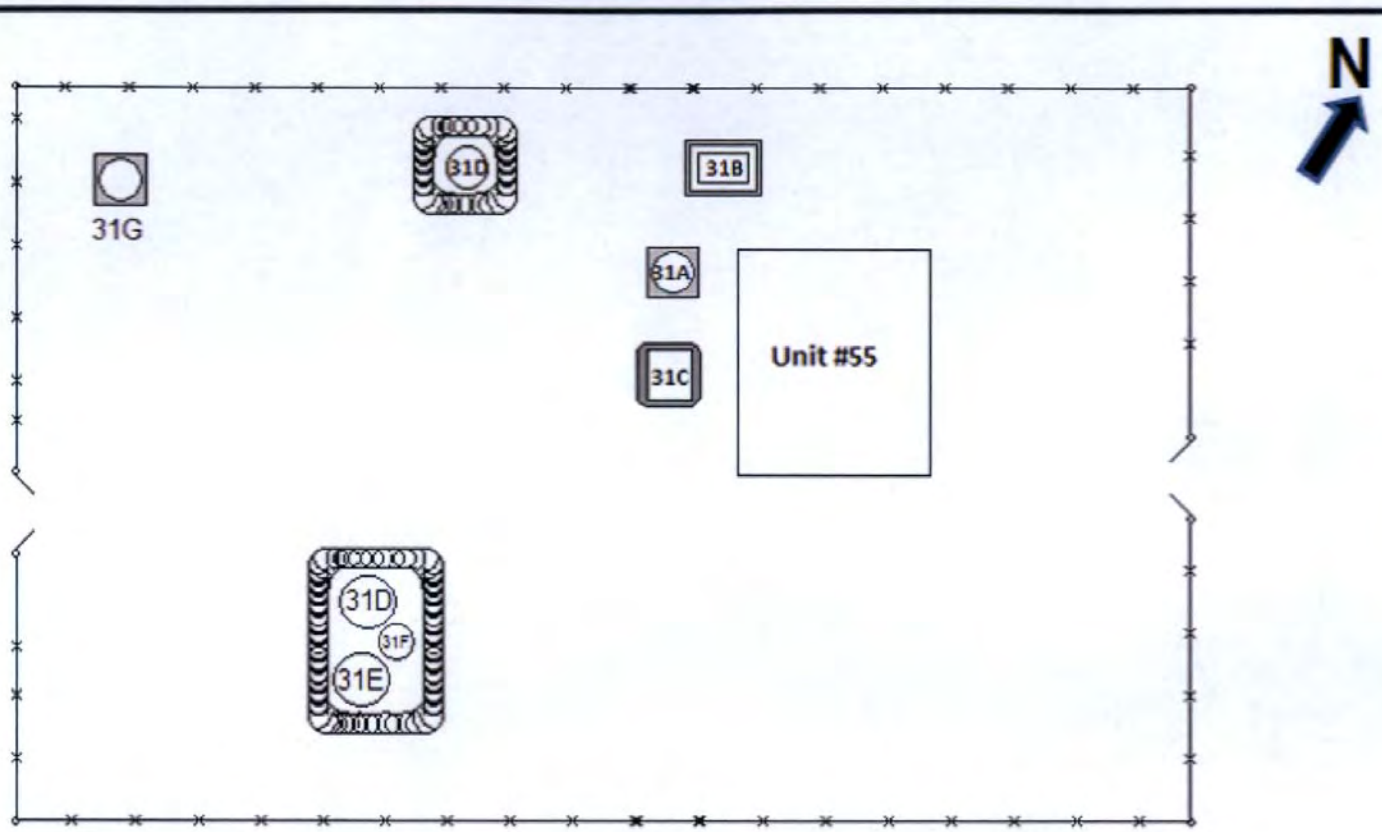


PGP

VANCE
COMPRESSOR STATION # 31
SPCC TANK LOCATION

NOTE: see page E-5 for tank identification

DATE: **August, 2016**

SCALE: NTS

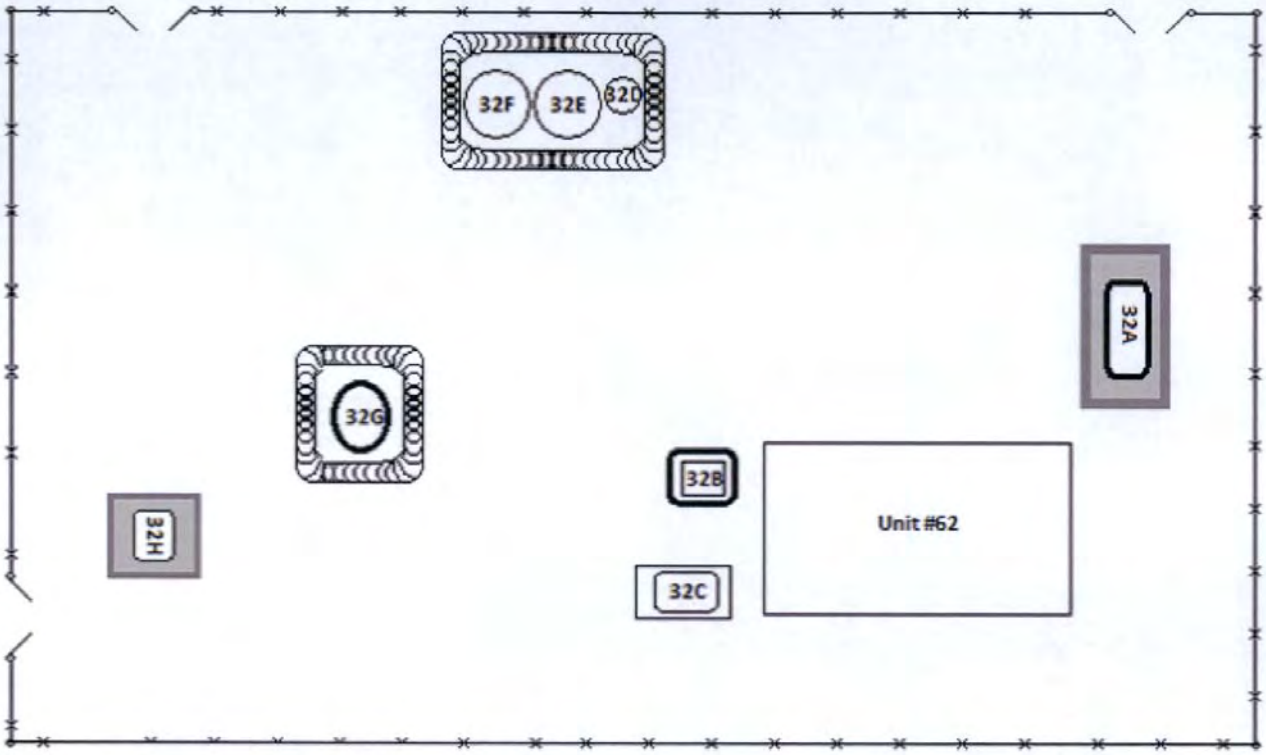


PGP

VANCE
COMPRESSOR STATION # 32
SPCC TANK LOCATION

NOTE: see page E-5 for tank identification

DATE: **August, 2016**

SCALE: NTS

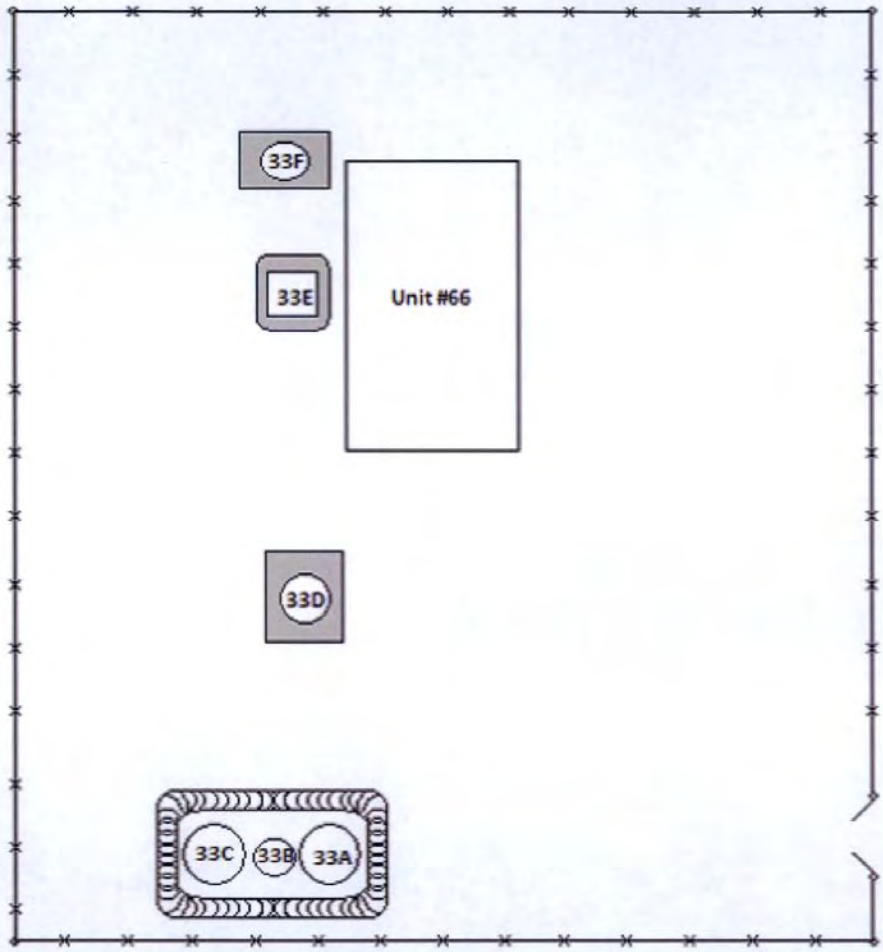


NOTE: see page E-5 for tank identification

VANCE
COMPRESSOR STATION # 33
SPCC TANK LOCATION

DATE: **August, 2016** SCALE: NTS

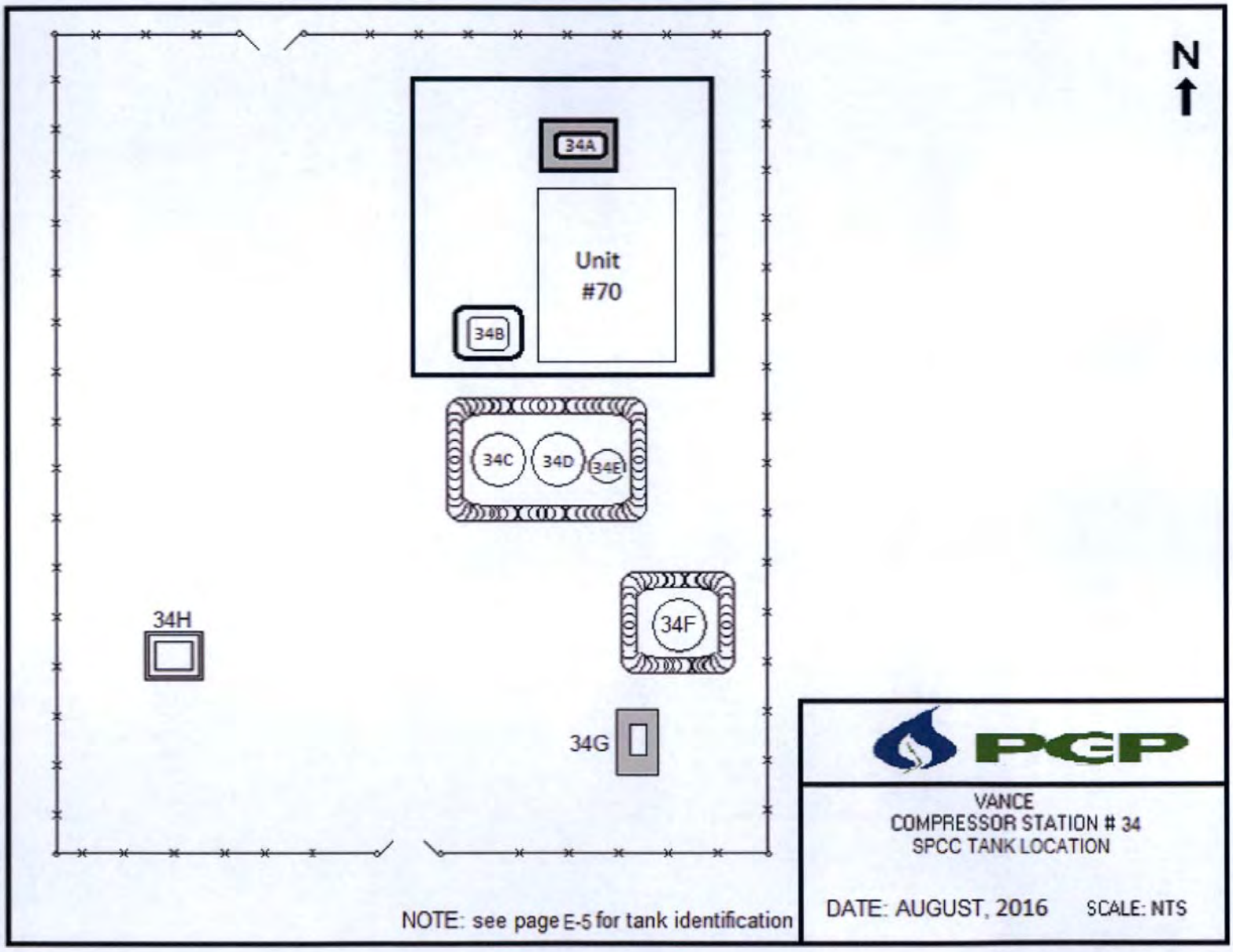
N
34A
Unit
#70
34B
34C
34D
34E
34F
34H
34G
PGP
VANCE
COMPRESSOR STATION # 34
SPCC TANK LOCATION
DATE: AUGUST, 2016
SCALE: NTS
NOTE: see page E-5 for tank identification

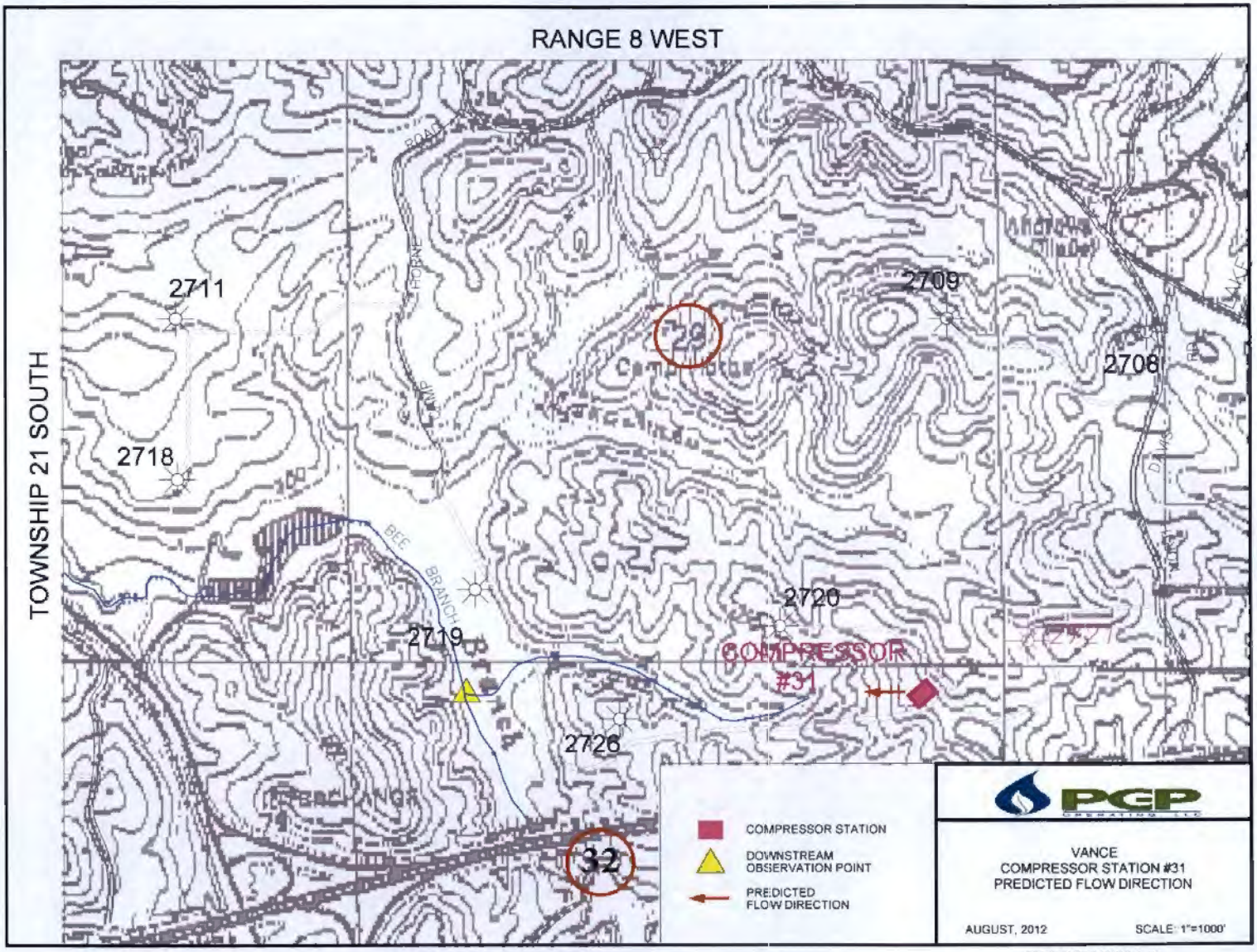


FILE:ADEM\SPCC\VAN No 31

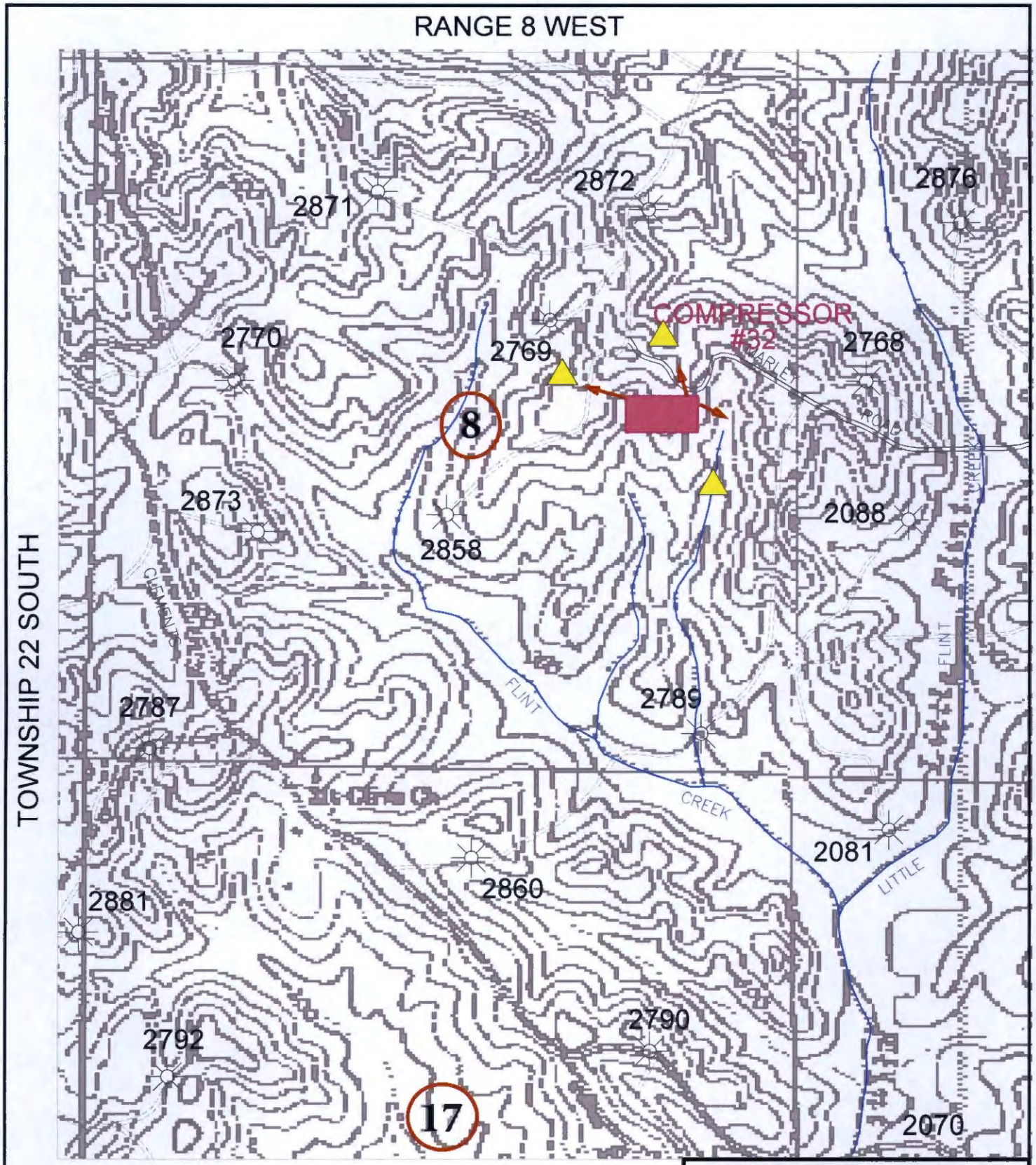


COMPRESSOR STATION

DOWNSTREAM OBSERVATION POINT

PREDICTED FLOW DIRECTION

PCP

VANCE
COMPRESSOR STATION #32
PREDICTED FLOW DIRECTION

AUGUST, 2012

SCALE: 1"=1000'

FILE: H:\ADEM\SPCC\VAN No 32

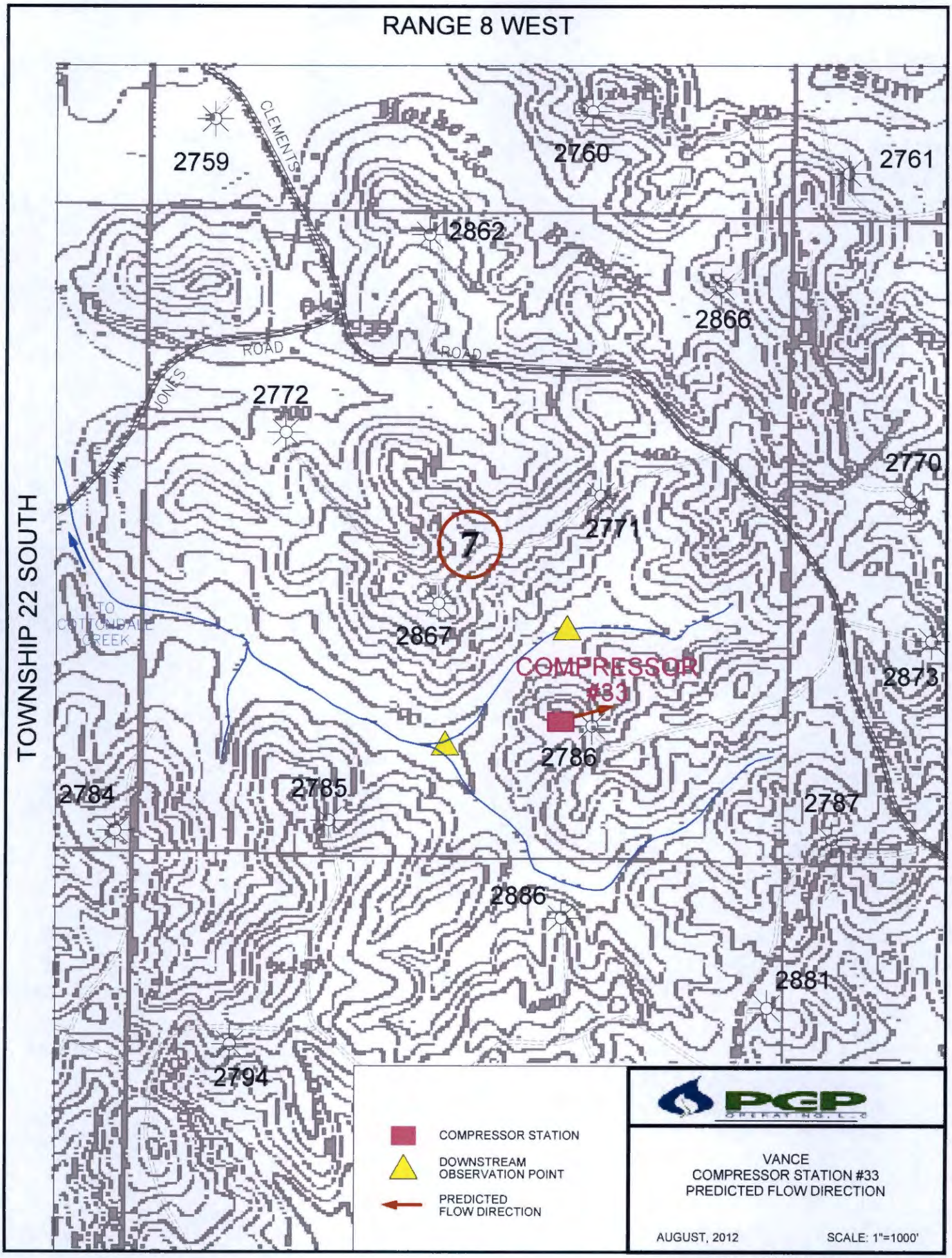
RANGE 8 WEST
TOWNSHIP 22 SOUTH
CLEMENTS
JONES
ROAD
ROAD
TO COTTONDALE CREEK
2759
2760
2761
2862
2866
2772
2770
2771
7
2867
COMPRESSOR #33
2873
2786
2784
2785
2787
2866
2881
2794
COMPRESSOR STATION
DOWNSTREAM OBSERVATION POINT
PREDICTED FLOW DIRECTION
PCP
VANCE
COMPRESSOR STATION #33
PREDICTED FLOW DIRECTION
AUGUST, 2012
SCALE: 1"=1000'
FILE:ADEM\SPCC\VAN No 33

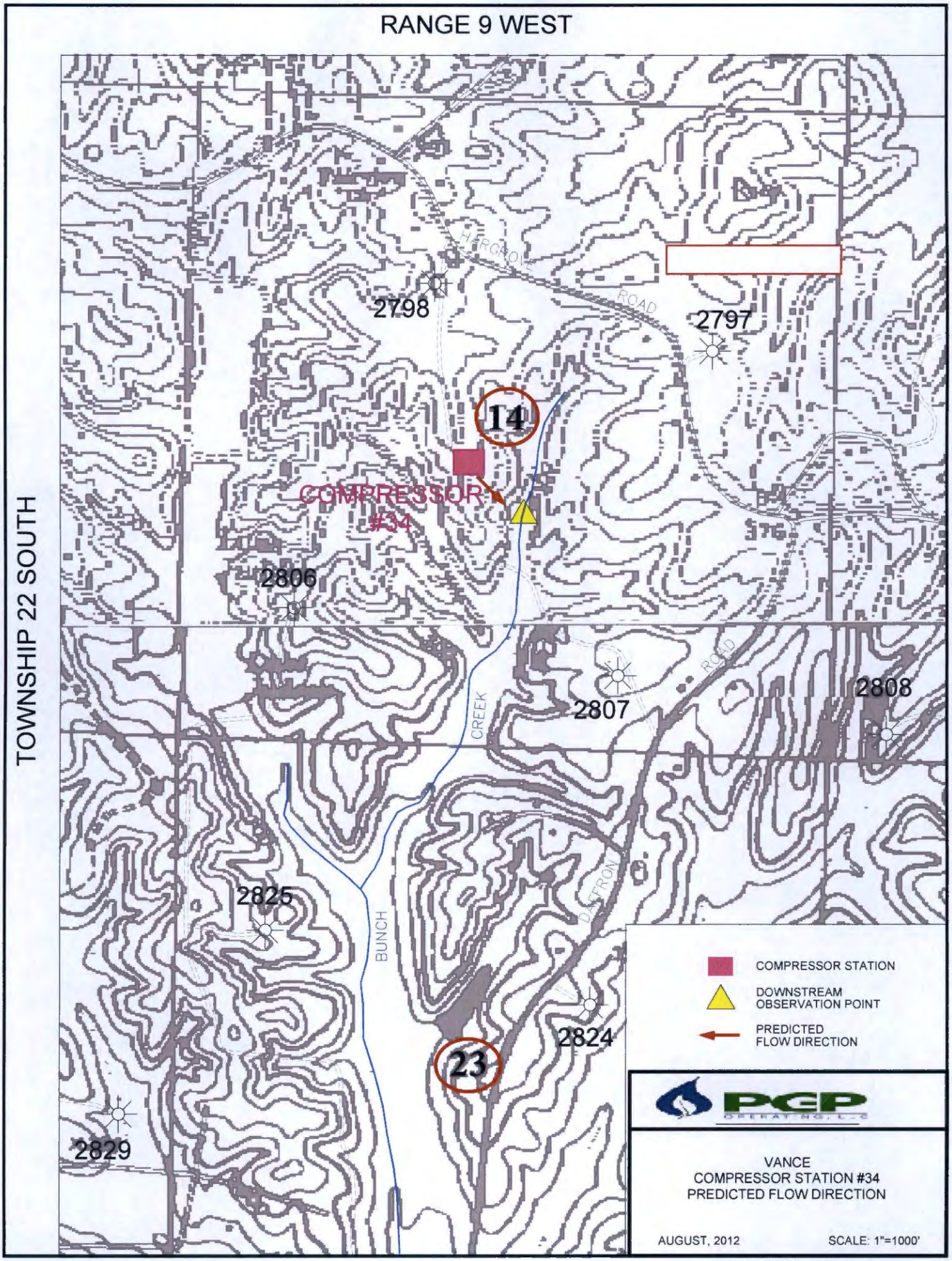
RANGE 9 WEST
TOWNSHIP 22 SOUTH
HARGROVE
ROAD
2798
2797
14
COMPRESSOR
#34
2806
2807
2808
CREEK
BUNCH
2825
2824
23
2829
COMPRESSOR STATION
DOWNSTREAM
OBSERVATION POINT
PREDICTED
FLOW DIRECTION
PGP
VANCE
COMPRESSOR STATION #34
PREDICTED FLOW DIRECTION
AUGUST, 2012
SCALE: 1"=1000'
FILE:ADEM\SPCC VAN No 34

# PGP OPERATING, LLC

## BEST MANAGEMENT PRACTICES PLAN

## FOR

## NON-POINT SOURCE DISCHARGE CONTROL

## COALBED METHANE RESOURCE EXTRACTION INDUSTRY

**Original: January 1, 2014**
**Revised March 6, 2019**

# BEST MANAGEMENT PRACTICES PLAN
# FOR
# NON-POINT SOURCE DISCHARGE CONTROL
# COALBED METHANE RESOURCE EXTRACTION INDUSTRY


| Section | | Page |
|---|---|---|
| I. | INTRODUCTION | 4 |
| II. | GENERAL EROSION CONTROL TECHNIQUES | 5 |
| III. | ROAD CONSTRUCTION | 6 |
| IV. | DRILLING PAD AND DRILLING PIT CONSTRUCTION | 9 |
| V. | PIPELINE CONSTRUCTION | 11 |
| VI. | ENGINEERING AND TECHNICAL SPECIFICATIONS | 12 |
| VII. | GOOD HOUSEKEEPING | 14 |
| VIII. | GENERAL USE WATER | 14 |
| IX. | DUST SUPPESSION | 14 |
| X. | MAINTENANCE | 14 |
| XI. | INSPECTION | 15 |
| XII. | EXCEPTIONS AND CHANGES TO BMP | 15 |
| XIII. | ADEM ASSISTANCE | 15 |
| XIV. | OPERATOR RESPONSIBILITY | 16 |
| XV. | WELL CLOSURE | 16 |
| XVI. | EMERGENCY RESPONSE AND NOTIFICATION | 16 |
| XVII. | TYPICAL SILT FENCE/EROSION CONTROL DIAGRAMS | 16 |
| XVIII. | TYPICAL STREAM CROSSING FOR STREAMS WITH FLOWS OF LESS THAN (10) CUBIC FEET PER SECOND | 16 |
| XVIV. | EMERGENCY RESPONSE AND NOTIFICATION | 17 |

**ENVIRONMENTAL TESTING & ENGINEERING**
**(A Division of Engineering Plus, Inc.)**
**P.O. Box 715**
**Northport, AL 35476**
**(205)339-0216**

# BEST MANAGEMENT PRACTICES (BMP) PLAN FOR STORMWATER NON-POINT SOURCE DISCHARGE AT PGP OPERATING, LLC'S MAXWELL CROSSING COALBED METHANE PROJECT IN HALE COUNTY, ALABAMA

**January 31, 2018**

The following is a general Best Management Practices (BMP) plan for PGP Operating Company, LLC's Maxwell Crossing Coalbed Methane Project in Hale County, Alabama. The plan was prepared by the Coalbed Methane Association and accepted by its members, including PGP Operating, LLC.

## CERTIFICATION

I, John K. Haddock, a registered Professional Engineer in the State of Alabama, being experienced in the field of erosion/sediment control and being familiar with the non-point source discharge permit requirements of the subject facility, hereby certify that the enclosed plan has been prepared under standard and accepted procedures to meet the regulatory requirements. The plan, prepared by the Coalbed Methane Association of Alabama, references various standard and accepted documents and was contributed to by recognized experts in the field of erosion and sediment control in the construction industry and is applicable to the conditions of the subject facility.

Environmental Testing & Engineering
(A Division of Engineering Plus, Inc.)

John K. Haddock

John K. Haddock, P.E.
Alabama Reg. No. 12998, President

ALABAMA REGISTERED No. 12998 PROFESSIONAL ENGINEER JOHN K. HADDOCK

# BEST MANAGEMENT PRACTICES PLAN

# FOR

# NON-POINT SOURCE DISCHARGE CONTROL

# COALBED METHANE RESOURCE EXTRACTION INDUSTRY

**BEST MANAGEMENT PRACTICES PLAN**
**FOR**
**NON-POINT SOURCE DISCHARGE CONTROL**
**COALBED METHANE RESOURCE EXTRACTION INDUSTRY**

## I. INTRODUCTION

The Federal Clean Water Act of 1972 established water quality goals for all waters of the United States. Nationwide, these goals were not being completely met. In 1987, Congress amended the Clean Water Act to provide a renewed effort to meet water quality goals. One area targeted for renewed emphasis in this Act is under Section 319 which deals with non-point source pollution (NPS).

Since non-point source problems originate from many different sources, the Alabama Department of Environmental Management through its Non-point Source Management Program wished to cooperate with various industries and government agencies to successfully manage these pollution problems. One of the best ways to manage potential NPS discharge is through cooperative establishment and implementation of best management practices (BMPs) that lessen the probability of initial causes of non-point source pollution. BMPs for the Coalbed Methane Industry involve various methods of erosion and non-point source pollution controls in well drilling, construction of roads, well pads, drilling pits, pipelines, and stream crossings.

Non-point source pollution may result from other contaminates which are carried by runoff (usually storm water) to waterbeds, either surface waters or ground water. This may include (but not be limited to) household trash, sewage, paints and solvents, oil and grease, and even items such as fertilizers, pesticides, and detergents. It could be stated that items entering bodies of water that changes the composition of the water is a pollutant. If this enters the body of water through a National Pollutant Discharge Elimination System (NPDES) permitted discharge, then it is considered a point source. However, if it reaches the body of water by other means that are not traceable to an identifiable facility, such as runoff seepage, percolation, etc., it is considered non-point source discharge.

The major components that may cause non-point source pollution resulting from operations by the coalbed methane industry include:

1) Sedimentation - Sedimentation of waterbeds due to soil erosion is the largest single pollution problem in the United States. Sedimentation reduces stream capacities, interrupts ecosystems, carries other pollutants into a body of water and may cause other potential environmental problems.

2) Oil and Grease - Machinery used to extract coalbed methane utilizes hydrocarbon products. Handling of these products and the machinery using these products should be done with care and with desire to prevent these components from entering waterbeds. Coalbed methane itself does not produce oil and grease in the production stream.

3) Fertilizers (Nutrients) - Nutrients, primarily phosphorous and nitrogen fertilizers, are sometimes applied to the construction area to stimulate vegetation growth. Both elements occur naturally in soils. Research has shown that a large increase of nutrient levels in water does not occur in drainage water where artificial fertilizers are applied except when fertilizers are allowed to fall directly into the body of water. Proper application will alleviate this situation as will erosion control measures during high flow periods of runoff where sediments may transport nutrients.

An existing industry for over thirty years, the coalbed methane industry has attempted to prevent contamination of water bodies caused by sedimentation and other pollutants. This has resulted in individual BMP's being developed by operators. To establish an industry wide cooperation, a more intense effort to accomplish control of non-point source discharges, the following Best Management Practices Plan is adopted by the Coalbed Methane Extraction Industry. Existing facilities currently utilized that may cause pollutant discharges will be upgraded to the guidelines as set forth in this document, to ensure that water quality is maintained.

## II. GENERAL EROSION CONTROL TECHNIQUES

A. Erosion control implementation will be conducted under the guidelines of persons experienced in construction techniques and erosion controls. The person(s) will have authority to take special actions as necessary to prevent water quality deterioration. It is recognized that soil types are site specific and contribute significantly to erosion characteristics and will be a factor in design and implementation of BMP's. Erosion control techniques to be used to prevent or control NPS pollution to maintain water quality standards during coalbed methane facilities construction may include.

1. Water diversion and energy dispersion structures located at the discharge end of the diversion that will divert runoff into level, vegetated areas, terracing, riprap, drop structures, or other satisfactory areas of dispersion.

2. Temporary erosion controls such as hay bales and/or silt fences will be installed in the natural drainage areas before or during the time of disturbance.

3. Erosion control methods of a more permanent nature, i.e., geotextiles, riprap, matting, etc., may be considered in areas necessitating more drastic controls such as steep slopes and soft soil conditions.

4. Roadsides, drilling locations, and pipelines where slopes are sufficient to induce high velocity flow and erosion, should be limed, fertilized, seeded, and/or mulched as necessary and as soon as practical after construction and in accordance with accepted soil conservation practices.

5. All areas that are disturbed, regardless of location, will be paved, covered with gravel, or vegetated as soon as practical. All erosion controls will be maintained until the disturbed area is covered or permanent vegetation is re-established.

6. To aid in maintenance of vegetation in disturbed areas, on site topsoil if available, should be reused on the surface of each site.

7. Plans to prevent the spillage of oils chemicals are detailed in the SPCC Plan.

8. Disposal of regulated waste will be in accordance with applicable state or federal regulations.

9. To minimize storm water contact from pollutant at compressor stations, the units are place under steel framed cover.

## III. ROAD CONSTRUCTION

Road construction is necessary to provide access to each well and facilities and usually will be of permanent type to allow movement of equipment in and out of the locations as required initially and during subsequent maintenance. These will also provide access for periodic monitoring.

A. Consideration of the following, to the extent practical, shall be utilized during Road siting:

   1. Existing roads should be used, where suitable, to prevent further soil disturbance.

   2. Ridge lines should be followed to minimize road grades and lessen the potential of water course disturbance.

   3. Road grades should be minimized whenever practical.

B. Consideration of the following, to the extent practical, shall be utilized during road construction:

   1. To control high velocity flow and potential erosion, velocity breakers (stabilized water bars) should be utilized.

   2. Whenever feasible, road construction should avoid areas of easily eroded soils, wetlands, or wet meadows. However, if necessary to construct roads in these areas, erosion control methods, as well as wetland road construction techniques, should be utilized to minimize the disturbance to these areas. If operations are not permitted under Section 404 of the Clean Water Act (Nationwide permit) the operator must obtain individual permits from Corps of Engineers (COE) prior to the disturbance of any wetland area. Additionally, a COE permit may be necessary under the Requirements of Section 10 of the Rivers and Harbors Act of 1899 and/or Section 103 of the Marine Protection, Research and Sanctuaries Act.

   3. Mine tailings (i.e., black or red rock), if used in road bed construction, will be tested for pH. Records shall be maintained for a period of 3 years. This testing shall be for each source of "black or red" rock and shall be in a pH range of 6 to 9. No known hazardous or toxic materials will be utilized in roadbed construction.

4. Vegetated filter strips of sufficient length to assist sediment deposition shall be maintained between streams and roads. If terrain limitations necessitate, other permanent methods (geo-textiles, riprap, matting, etc.) may be used instead of or in conjunction with vegetated filter strips, provided the water course is not altered or diverted (see VIII, page 14).

5. Measures will be taken to prevent construction materials, (dirt, boulders, rock, trees, etc.) from being deposited into waterbeds. However, if these materials inadvertently enter the body of water, measures will be taken to remove those immediately. These measures should be of such to prevent further environmental damage.

6. Road construction and roadway drainage should be conducted under the guidance of a person experienced in construction techniques and erosion control.

C. Due to the topography of the coal degas operation area, stream crossings will be necessary by roads. Roadways may cause more water course disturbance, redirect flow, potentially limit movement of biota, and are more permanent above stream level structures. It is possible through careful planning and careful construction that potential environmental damage can be lessened significantly and possibly eliminated.

The following guidelines, where practical, should be used in developing road-stream crossings:

1. Stream crossings should be minimized as practical. Existing culverts, bridges, fords and/or other crossings should be employed whenever possible.

2. Crossings, where practical and/or limiting environmental damage, should be made at right angles to the main stream channel.

3. Each source of mine tailings (black or red rock), if used for fill material during construction of the stream crossing, will be tested quarterly for pH and shall be in a pH range of 6 to 9 pH units. Records shall be maintained for a period of 3 years. No known hazardous or toxic materials shall be used.

4. Typical crossing plans will be submitted to ADEM for per-approval. These plans are based upon mean stream water flow (based on best available historical data) of less than 10 cfs. This typical plan will include the following:

   a. Crossing plan will be prepared and certified by a professional engineer registered in the State of Alabama.

   b. Crossing plan will contain a brief narrative description of the project.

   c. The plan will include a 1"-2,000' (or larger) USGS topographic map showing the location of area operations.

   d. The plan will include plan and profile drawings of the typical crossing and associated water quality control protection measures based on various flow rates.

e. The typical designs will be of such to allow an opening large enough to pass mean water flow.

f. Placement of rock fill without opening for passage of water and biota is not acceptable.

g. The crossing if considered to be permanent (greater than 120 days) then the design criteria shall be based on a 25-year flood event.

h. If the crossing is considered to be a temporary structure (less than 120 days) then the design criteria shall be based on a 2-year flood event.

i. If operations are not permitted under Section 404 of the Clean Water Act (Nationwide permit) the Operator must obtain individual permits from the Corps of Engineers prior to the disturbance of any wetland area.

j. After approval of these typical plans by ADEM no notification will be required to ADEM before construction.

5. Crossing plans for mean water flow of streams of 10 cfs or greater or where there is greater than 200 cubic yards of fill below the plane of the ordinary high-water mark shall require the following.

   a. Crossing plan prepared and certified by a professional engineer registered in the State of Alabama.

   b. Crossing plan will contain a brief narrative description of the project.

   c. The plan will include a 1"-2,000' USGS (or larger) topographic map showing the location of the crossing.

   d. The plan will contain plan profile drawings of the crossing and associated water quality control protection measures.

   e. The design will be of such to allow an opening large enough to pass mean water flow.

   f. Placement of rock fill without opening for passage of water or biota is unacceptable. A culvert should not be placed in such a manner to inhibit passage of water and biota during normal stream flows.

   g. The structure, if permanent (greater than 120-day life), must be designed in accordance with engineering standards to ensure structural integrity and stability for safe passage of water during 25-year interval flood events.

   h. Temporary structures, (less than 120-day life) can be designed in accordance with engineering standards based on a 2-year interval flood event.

   i. Applications should be submitted at lease 30 days in advance of the beginning date. A minimum of 14 days is required by ADEM, after a complete and non-deficient

plan is received, for application processing to make determination of administrative approval of the plan. The ADEM will make every effort to make the determination within 14 days of submission. The ADEM will make every effort to process emergency request on an individual basis.

j. If operations are not permitted under Section 404 of the Clean Water Act (Nationwide permit) the operator must obtain individual permits from the Corps of Engineers prior to the disturbance of any wetland. (If fill is greater than 200 cubic yards below the ordinary high water mark an individual permit will be required).

k. After approval of these plans by ADEM, 48 hour verbal notification will be required to ADEM before construction begins. This notification requires no action by ADEM before construction begins.

l. As built certification shall be submitted by a registered professional engineer, registered in the State of Alabama, within 45 calendar days of completion of the stream crossing.

m. It is noted that projects of this nature are site specific and ADEM reserves the right to request submission of information or accept reasonable alternatives on an individual basis, in order to make water quality certification determination.

## IV. DRILLING PAD AND DRILLING PIT CONSTRUCTION

Drilling pad construction is necessary to allow the movement of a drilling rig into the location to drill a hole into the coal. This location is usually an all weather installation to provide access for maintenance and observation of the well. The drilling pad is kept as small as possible to lessen the environmental disturbance.

A drilling or reserve pit is a temporary earthen pit used to store materials used or generated in the drilling or workover operation. These materials usually consist of water, soil and rock removed from the drill hole, drilling fluids which normally are formulated using clay, water, and pH adjustment materials, and/or workover fluids which normally consist of water, clay, and biodegradable, environmentally safe polymers. The reserve pit may also be used as an emergency catch basin for such items as location runoff, water produced during drilling operations and/or oil from equipment which may be accidentally spilled. This pit essentially prevents fluids and solids from being discharged off the drilling pad and preventing potential environmental damage.

The following guidelines will be implemented where practical in drilling pad and pit construction:

A. Pad size will be minimized to an extent practical to lessen the amount of surface area disturbed.

B. All slopes should be minimized and/or appropriate erosion control and construction techniques utilized to minimize erosion of those slopes.

C. Pads and/or pits should be constructed a sufficient distance from a body of water for maintenance of a streamside management zone (SMZ). Where pads and/or pits are necessarily constructed adjacent to waterbeds, appropriate measures shall be taken to protect that body of water and water quality. A streamside management zone is an area along a stream bank where existing vegetation is not disturbed which helps prevent soil from moving into the stream. Where sufficient SMZ area is not available, other measures of erosion control may be utilized in conjunction with available SMZ to lessen potential water quality and body of water damage, provided the water course is not altered or diverted.

D. Measures will be taken to prevent construction materials, (dirt, boulders, rock, trees, etc.) from being deposited into waterbeds. However, if these materials inadvertently enter the body of water, measures will be taken to remove those immediately. These measures should be of such to prevent further environmental damage.

E. Sites should be contoured during construction to prevent storm-water runoff from creating erosion paths.

F. Materials that adversely affect pit wall integrity, i.e., trees, tree stumps, large boulders, etc., will not be used.

G. Pits should, if practical, be constructed in cut or not disturbed areas, instead of fill areas. If necessary to construct pits in fill, measures will be taken to provide compaction of the pit walls to ensure structural integrity. All fill areas should be compacted, and all containment pits built in fill material will be compacted.

H. Pits should be lined with polyethylene of other non-permeable material in areas where soil types do not prevent potential contamination of ground water.

I. Pit waste waters will be disposed under the guidelines established by the current NPDES permit.

J. No siphons or openings will be placed in or over levees or walls that would permit escaping of contents so as to cause pollution or contamination.

K. Liquid levels in pits shall not be permitted to rise within two (2) feet of top of pit levees or walls. Pit levees or walls shall be maintained at all times to prevent deterioration, subsequent overfill, and leakage of contents to the environment.

L. Pits may be closed after removal of liquids by burial after the liner is sufficiently perforated or otherwise modified.

M. Operators shall prevent, as practical, the placing of oil, trash, or other materials into a reserve pit which would increase the difficulty in cleanup of the pit or otherwise harm the environment. Such material shall be properly stored and disposed of according to applicable State or Federal regulations. No garbage is to be burned on site. All garbage and trash will be disposed of at an approved landfill site.

N. Trees and stumps (not household garbage) may be burned on location after notice to the Alabama Forestry Commission and under local, State and Federal regulations.

O. On some occasions the construction of a drill pad may create a need to stabilize off-site tracking of sediment from vehicles on to paved roads. When this occurs sufficient amount and size of stone will be placed to control and minimize off-site tracking of sediment.

## V. PIPELINE CONSTRUCTION

Pipelines are necessary in coalbed methane operations to allow for the collection of produced water to a central facility and to discharge sites. Pipelines collect gas from individual wells to compression facilities and to high pressure gas sales lines. Depending on burial procedures, pipelines usually generate a very short time or no disturbance to water courses. Through proper erosion/sedimentation control techniques, as previously outlined, limited environmental damage should occur.

A. Consideration of the following, to the extent practical, shall be utilized during pipeline siting:

1) Gathering lines should follow road rights-of-way.

2) Stream crossings should be minimized if roadways cannot be followed. This may not be possible with high pressure line routing. If necessary to conduct stream crossings during pipeline construction care should be taken to minimize stream disturbance and erosion controls shall be used to prevent sedimentation of the stream body downstream of the crossing. If operations are not permitted under Section 404 of the Clean Water Act (Nationwide permit) the operator must obtain individual permits from the Corps of Engineers prior to the disturbance of any wetland area.

3) Grades should be minimized where practical.

4) Rights-of-way should be minimized within acceptable pipeline construction techniques.

B. Consideration of the following, to the extent practical, shall be utilized during pipeline construction:

1) One extreme pipeline right-of-way grades, water bars shall be used to reduce runoff velocities.

2) Whenever feasible pipeline construction should avoid areas of soil which are easy to erode, wetlands, and wet meadows. However, if necessary to construct pipelines in these areas, erosion control methods, as well as, wetland pipeline construction techniques should be utilized to minimize the disturbance to these areas.

3) Vegetated filter strips of sufficient length to assist sedimentation deposition shall be maintained between streams and pipelines. If terrain limitations necessitate, other permanent methods (geotextiles, riprap, matting, etc.) may be used instead of or in conjunction with vegetated filter strips.

4) Trenches will be back filled with soil according to accepted pipeline construction techniques.

5) To the extent practical, pipeline surface disturbance shall be minimized.

6) Pipeline construction should be conducted under the guidance of a person experienced in pipeline construction techniques and erosion control.

## VI. ENGINEERING AND TECHNICAL SPECIFICATIONS

### A. Pipe Material Specifications

1. Circular concrete pipe shall be bell and spigot in accordance with ASTM Designation C76.

2. Corrugated metal pipe shall be in accordance with AASHO Designation M 190.

3. Pre-cast reinforced concrete box sections shall be in accordance with ASTM C789 (AASHTO 259).

4. Steel culvert pipe shall be in accordance with ASTM A139, Grade "B", or ASTM A53.

5. Rip-rap shall conform to Alabama Highway Department Specifications, 1989 Edition, Section 814.

### B. Silt Fence Material Specifications

1. Silt fences consist of a geotextile filter fabric mounted on post, or a geo-textile filter fabric attached to posts by means of adjustable belts or loops or other means that will securely hold the fabric in an upright position.

2. Filter fabric shall be a polymeric fabric formed from a plastic yarn of a long-chain synthetic polymer composed of at least 85% by weight of propylene ethylene, amide, ester or vinyledene chloride and shall contain stabilizers and/or inhibitors added to the base plastic to make the filaments resistant to deterioration due to ultraviolet and heat exposure for at least six months.

3. After forming, the fabric shall be processed so that the filaments retain their relative positions with respect to each other. The fabric shall be free of defects or flaws which significantly affect its physical and/or filtering properties. Geo-textile fabrics shall retain at least 80% of the minimum specified Grab Strength at the end of the six month test.

### C. Seeding and Soil Nutrient Specifications

1. Seed. All seed used shall be labeled in accordance with U.S. Department of Agriculture Rules and Regulations under the Federal Seed Act. All seed shall be furnished in sealed

bags. Seed which has become wet and moldy or otherwise damaged in transit or storage will not be used.

2. Seed Mixtures are Recommended as follows:

| Spring and Summer Mixture (April – August) | | |
|---|---|---|
| Pensacola Bahiagrass | - | 20 lbs./acre |
| Hulled Common Bermudagrass | - | 5 lbs./acre |
| Hulled Sericea Lespedeza | - | 5 lbs./acre |
| Browntop Millet | - | 15 lbs./acre |
| Crimson Clover | - | 5 lbs./acre |

| Fall and Winter Mixture (September – March) | | |
|---|---|---|
| Pensacola Bahiagrass | - | 18 lbs./acre |
| Unhulled Common Bermuda | - | 7 lbs./acre |
| Unhulled Sericea Lespedeza | - | 5 lbs./acre |
| Kentucky 31 Fescue | - | 7 lbs./acre |
| Common Annual Rye | - | 7 lbs./acre |
| Crimson Clover Inoculated | - | 3 lbs./acre |
| Ladina Clover Inoculated | - | 3 lbs./acre |

Note: These are recommended blends. Other blends of seeds may be utilized.

3. Fertilizer shall be 13-13-13 or equivalent grade, (1-1-1-ratio), pelletized, uniform in composition, free flowing, and suitable for application with approved equipment. The fertilizer shall be delivered to the site in bags or other convenient containers, each fully labeled, conforming to the applicable state fertilizer laws, and bearing the name, trade name or trademark and warranty of the producer. Rate should be equivalent to 500 lbs. per acre of actual fertilizer (13-13-13) or adjusted accordingly depending on fertilizer blend used and/or soil composition.

4. Dolomitic Limestone – Lime shall be applied at the rate of 2000 lbs. per acre or required by soil composition.

5. Mulch – For use in hydraulic application of seed, lime and fertilizer, shall consist of a pulped ecology by-product made from printer's scrap paper which contains wood cellulose. The mulch shall contain no growth or germination-inhibiting factors and shall, after application, assume a contrasting color to the soil to facilitate visual metering to aid in applying the product over the area to be seeded. On an air-dry weight basis, the fiber shall contain a maximum of 8% moisture. The pH ratio shall be applied at the rate of 1200 lbs. per acre. The mulch shall, after additional and agitation in slurry tanks with fertilizers, grass seeds, water, and other approved additives, become uniformly suspended to form a homogeneous slurry. Hay or straw mulch may also be an acceptable method of mulching.

## VII. GOOD HOUSEKEEPING

Good housekeeping as defined in this plan is the preservation of the environment in as near an undisturbed condition as before the project began. This includes removal of all trash, litter, and other potential sources of pollution to the environment or waterways. Construction materials and sites should be maintained in a visually acceptable manner.

## VIII. GENERAL USE WATER

Due to the nature of operations, it is often necessary to use large volumes of water for use in drilling and completions of the coalbed methane well. Water used in drilling and completion will be obtain from public water supplies.

Small volumes of water are used during various maintenance operations. Majority of the time produced water from holding ponds will be used for these operations. However, on occasions some water from waters of the STATE (lakes, ponds, streams, rivers, etc.) will be used under the following guidelines:

A. Trucks will avoid damage to shore lines and banks of streams. (i.e., TRUCKS WILL NOT be backed to the edge of the water) Suction lines will be laid to prevent SMZ damage.

B. Suction lines will not be allowed to back flush.

C. Damages that may result form this practice will be remedied as per this BMP plan.

## IX. DUST SUPRESSION

Dust is generated from the driving on lease roads to coalbed methane facilities. Due to the many miles of lease roads it would not be practical to use water as dust suppression. To minimize the generation of dust in the coalbed methane operations lease roads are graveled and driving speeds are reduced.

## X. MAINTENANCE

Stream crossings, roads, road sides, pipelines and drilling pads will be maintained to prevent erosion and degradation. A visually acceptable standard will be maintained during the entire life of the project.

## XI. INSPECTION

A monthly inspection will be performed and an accurate and complete record kept which contains the name of the person performing the inspection, when the inspection took place, what was noted during the inspection, and what corrective actions were taken. Such records will be retained for at least 3 years and be made available to the ADEM upon request. This should not be deemed to be all inclusive of inspections. Each operator shall be responsible for maintaining the area of operation to be following other provisions of this BMP plan on a continuous basis.

## XII. EXCEPTIONS AND CHANGES TO BMP

Due to the site specific nature of many operations of the coalbed methane industry and growth within that industry (both regulatory and technical), alternate plans and changes to this plan may be submitted by individual operators and/or industry to ADEM for review and subsequent approval or disapproval on a case by case basis. These plans may be in lieu and/or in addition to this Best Management Practices Plan.

## XIII. ADEM ASSISTANCE

ADEM shall furnish, at the request of the operator, assistance in pre-assessing a project and/or operations to provide for minimization of non-point source discharge and reduce non-compliance or violations to the Clean Water Act.

The ADEM will review, on a case by case basis, new technology or innovative designs proposed to be implemented in conjunction with or in addition to accepted practices, which are not detailed or covered under this document.

In areas where watercourses must be altered or diversions are necessary, coordination with the ADEM is required and will be on a case by case basis.

It should be noted that other local, State, and Federal agencies may provide additional assistance upon request in planning and implementing best management practices. This includes Local and County Commissions, Local Soil and Water Commissions, State of Alabama Department of Conservation and Natural Resources, Alabama Forestry Commission, Alabama Surface Mining Commission, and the USDA Sail Conservation Service.

It will be the obligation of each operator and subcontractor to be familiar with this plan and follow the guidelines set forth herein. Cooperation by the Coalbed Methane Industry, subcontractors, and ADEM will result in little difficulty in the implementation of this plan.

## XIV. OPERATOR RESPONSIBILITY

The ADEM will recognize good faith efforts undertaken by or on the behalf of the operator. However, it is the responsibility of the operator to implement and maintain all measures necessary to ensure compliance with applicable State Law and ADEM regulations.

## XV. WELL CLOSURE

The well bore will be plugged in accordance with the State of Alabama Oil and Gas Board Regulations. Reclamation of the wellpad shall be in accordance with existing lease or surface owner provisions, unless in conflict with State and/or Federal regulations. If in conflict, the State and/or Federal Regulation shall control.

## XVI. EMERGENCY RESPONSE AND NOTIFICATION

In an emergency, i.e., oil or chemical spills, treatment facility upset or bypass, pit failure, stream crossing failure, etc. The personnel listed in Section XVIV should be contacted.

## XVII. TYPICAL SILT FENCE/EROSION CONTROL DIAGRAMS

Appendix A

## XVIII. TYPICAL STREAM CROSSINGS FOR STREAMS WITH FLOWS OF LESS THAN TEN (10) CUBIC FEET PER SECOND

Appendix B

XVIV. Emergency Notification Call Out

## VANCE

| Name | Office # | Home # | Mobile # | S-LINC # |
|---|---|---|---|---|
| **1. Rose, Mark** | 554-3133 | 339-7721 | 242-7328 | 1*1042*22 |
| **2. Louis Guidroz** | 554-3107 | 491-9005 | 344-1878 | 1*1042*366 |
| **3. Brasfield, Scott** | 554-3137 | 759-2215 | 349-7388 | 1*1042*73 |
| **4. Bishop, James** | 554-3108 | 960-8944 | 960-8944 | 1*1042*315 |
| **5. Ray Battles** | 554-3109 | 637-4767 | 577-1170 | 1*1042*355 |

## Oak Grove

| Name | Office # | Home # | Mobile # | S-LINC # |
|---|---|---|---|---|
| **1. Rose, Mark** | 554-3133 | 339-7721 | 242-7328 | 1*1042*22 |
| **2. Louis Guidroz** | 554-3107 | 491-9005 | 344-1878 | 1*1042*366 |
| **3. Brasfield, Scott** | 554-3137 | 759-2215 | 349-7388 | 1*1042*73 |
| **4. Bishop, James** | 554-3108 | 960-8944 | 960-8944 | 1*1042*315 |
| **5. Ray Battles** | 554-3109 | 637-4767 | 577-1170 | 1*1042*355 |

# APPENDIX A

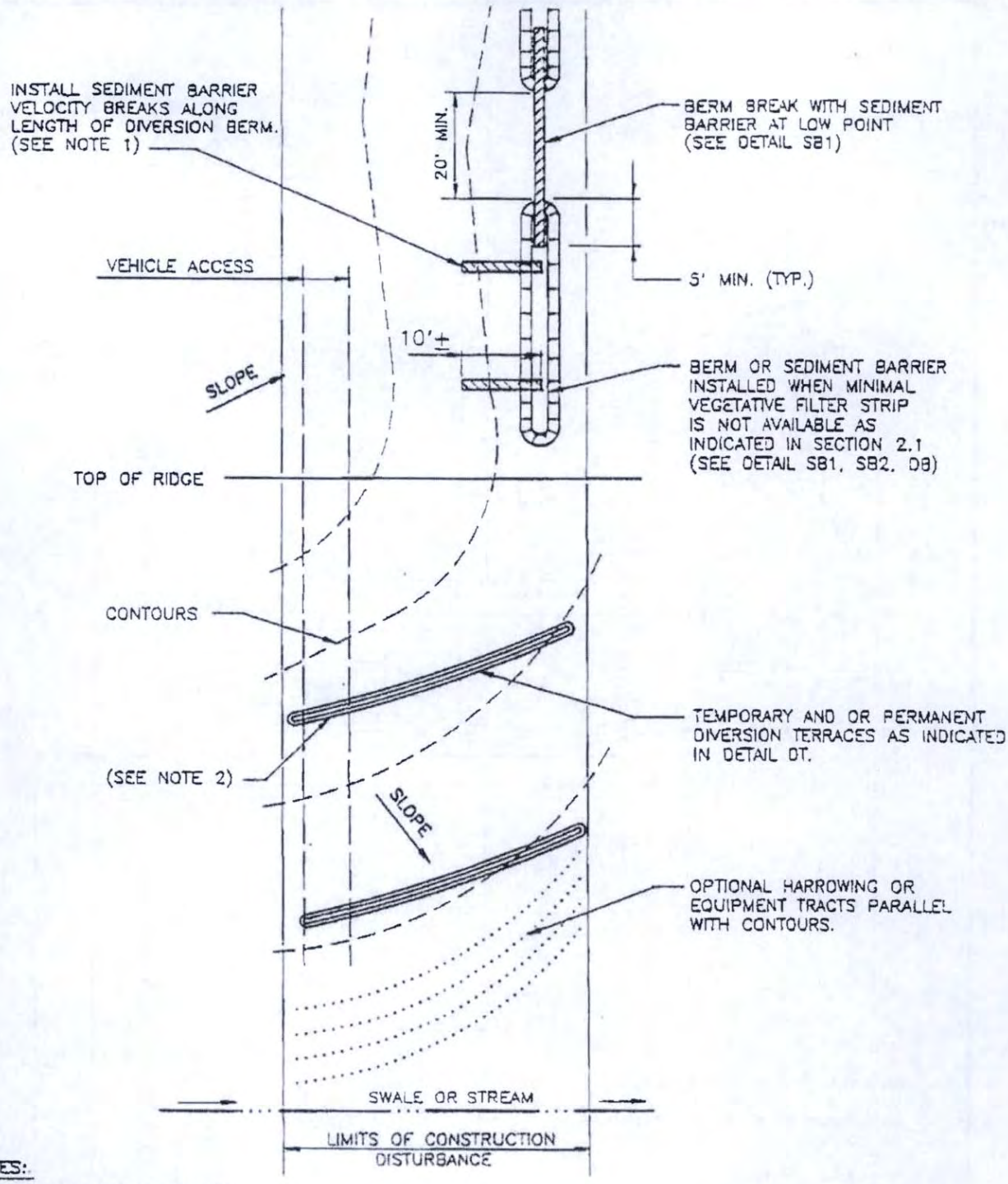


NOTES:

1. VELOCITY BREAK SPACING

| LONGITUDINAL SLOPE % | DEGREES | BREAK SPACING |
|---|---|---|
| <10 | < 6± | 150' |
| 10–20 | 6± – 11± | 75' |
| 20–30 | 11± – 17± | 50' |
| >30 | >17± | 40' |

2. DO NOT INSTALL TEMPORARY DIVERSION TERRACES ACROSS VEHICLE ACCESS AREA.

**PGP Operating, LLC.**

PGP Operating, LLC.
17300 Brookwood Pkwy.
Vance, Al. 35490

BEST MANAGEMENT PRACTICES PLAN
DETAIL OC
TYPICAL OVERLAND CONTROL MEASURES

OCTOBER, 2017

SCALE: N.T.S.

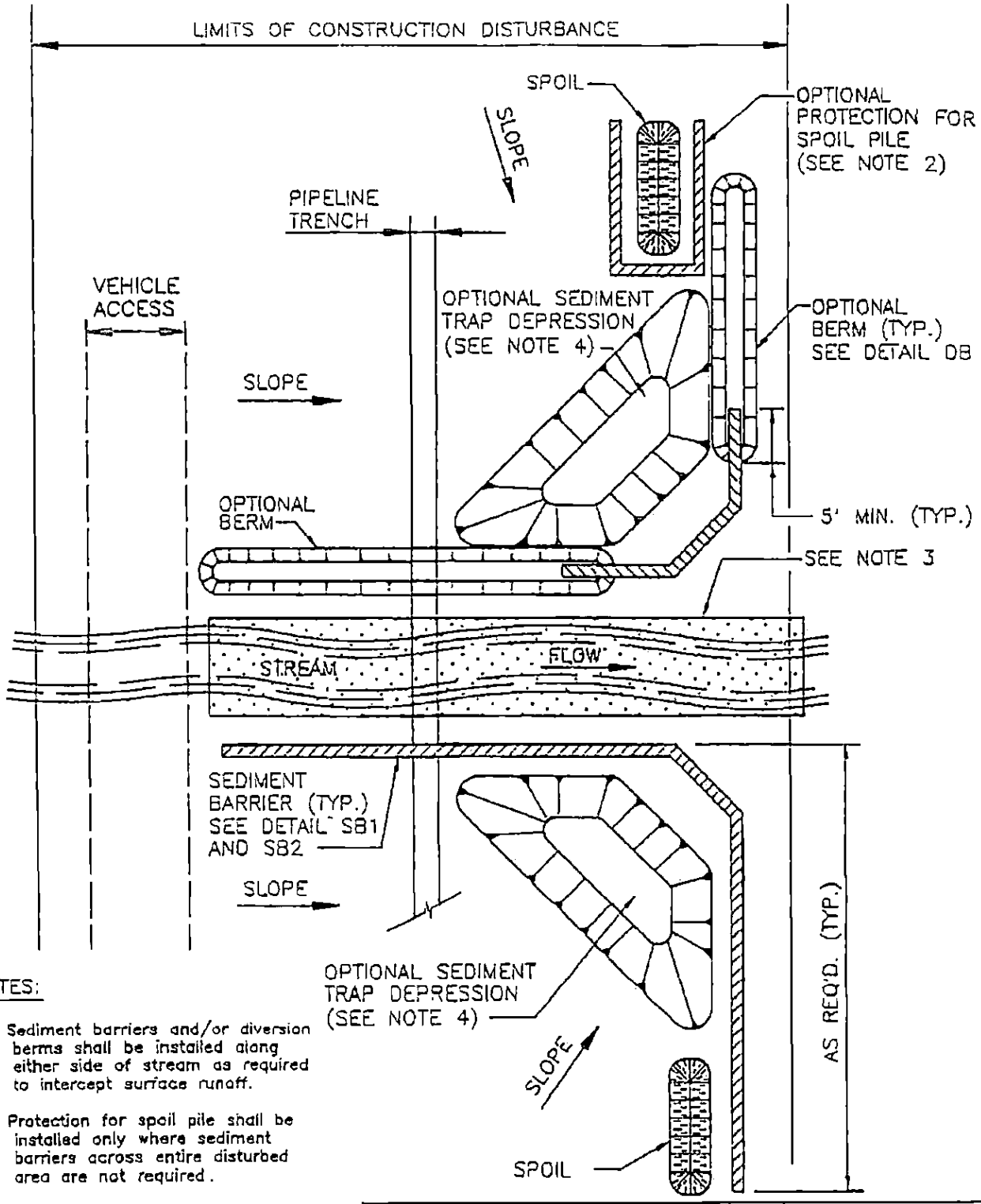


NOTES:

1. Sediment barriers and/or diversion berms shall be installed along either side of stream as required to intercept surface runoff.
2. Protection for spoil pile shall be installed only where sediment barriers across entire disturbed area are not required.
3. For intermittent streams servicing drainage basins greater than 10 acres channel lining erosion control fabric may be installed in the flow channel in order to prevent erosion of the channel bed
4. Construct depression as surface area is available. Construct side slopes at 3:1 and depth at 2 feet to 3 feet.

**PGP Operating, LLC.**

PGP Operating, LLC.
17300 Brookwood Pkwy.
Vance, Al. 35490

BEST MANAGEMENT PRACTICES PLAN
DETAIL OC
TYPICAL OVERLAND CONTROL MEASURES

OCTOBER, 2017 SCALE: N.T.S.

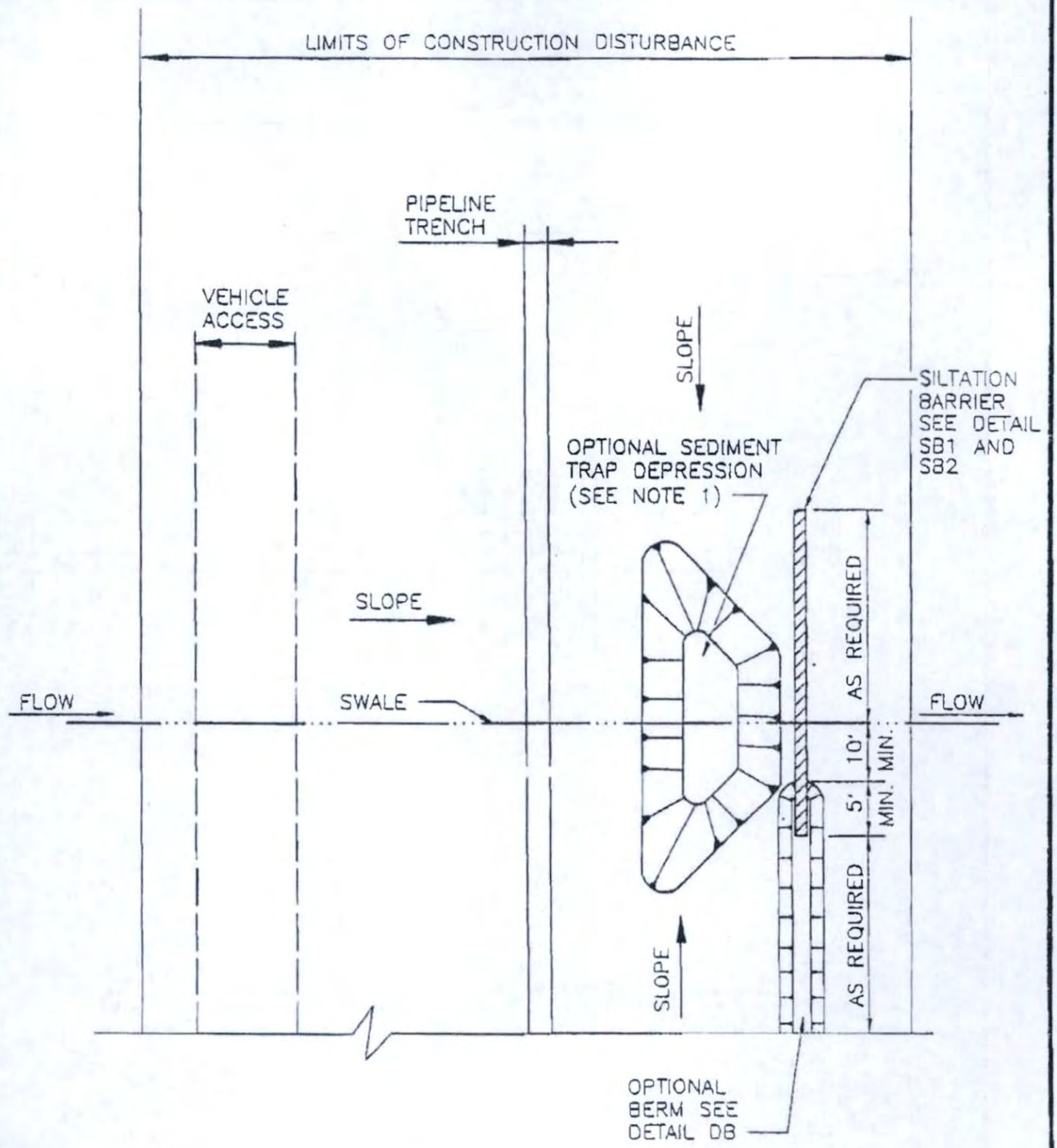


NOTE:

1. Construct depression as surface area is available. Construct side slope at 3:1 and depth at 2 feet to 3 feet.

**PGP Operating, LLC.**

PGP Operating, LLC.
17300 Brookwood Pkwy.
Vance, Al. 35490

BEST MANAGEMENT PRACTICES PLAN
DETAIL OC
TYPICAL OVERLAND CONTROL MEASURES

OCTOBER, 2017

SCALE: N.T.S.

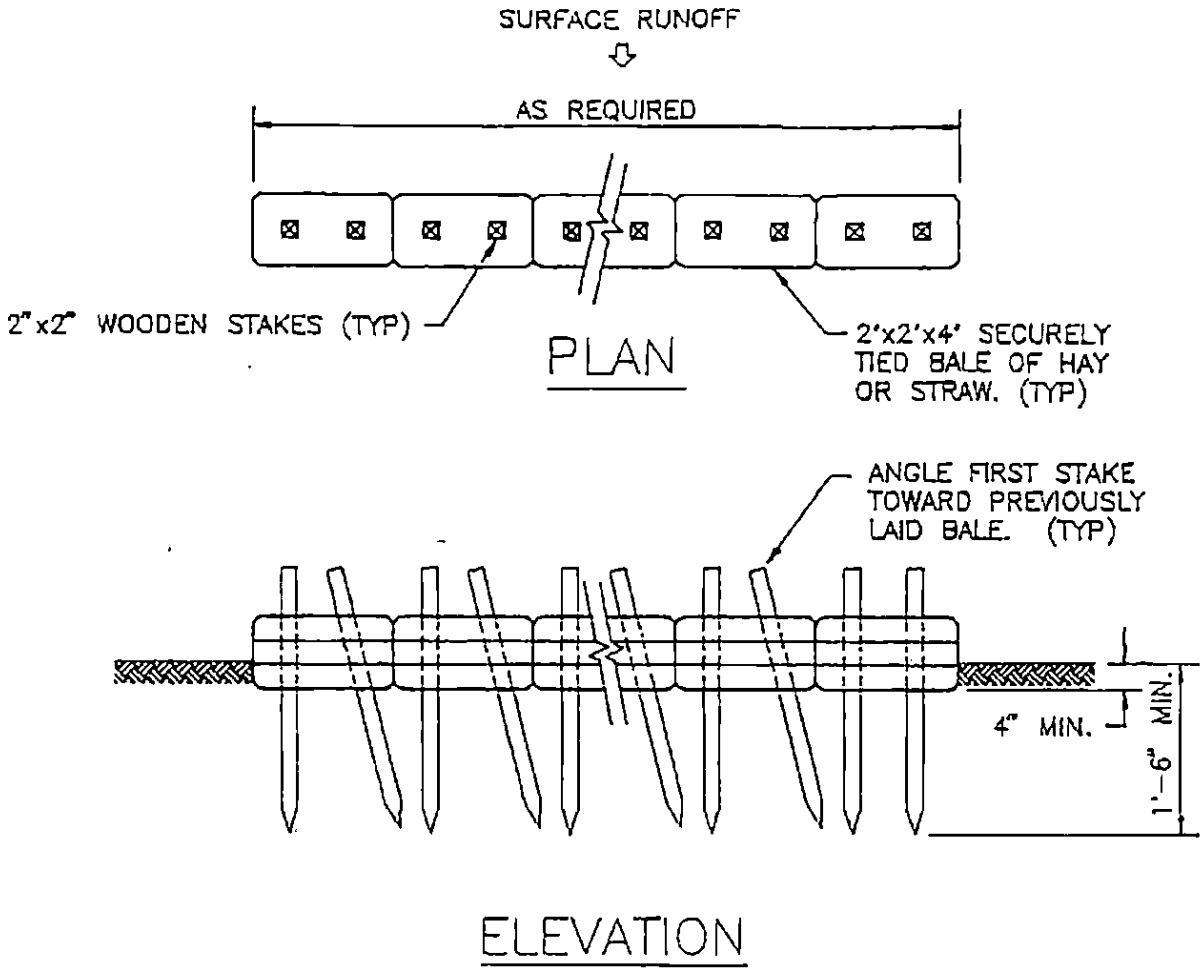


NOTES:

1. BALE BARRIERS OR SILT FENCES SHALL BE INSTALLED TO FILTER SEDIMENT FROM SURFACE RUNOFF.
2. INSTALLATIONS SHALL BE PERIODICALLY CHECKED AND IF FLOW IS OBSTRUCTED, BUILD-UP OF SEDIMENT SHALL BE REMOVED.
3. SEDIMENT BARRIERS SHALL BE REMOVED TO RESTORE NATURAL DRAINAGE PATTERN AFTER AREA IS STABILIZED. HAY OR STRAW FROM BALE BARRIERS MAY BE SCATTERED OVER THE SURROUNDING AREA.

**PGP Operating, LLC.**

PGP Operating, LLC.
17300 Brookwood Pkwy.
Vance, Al. 35490

BEST MANAGEMENT PRACTICES PLAN
DETAIL OC
TYPICAL OVERLAND CONTROL MEASURES

OCTOBER, 2017 SCALE: N.T.S.

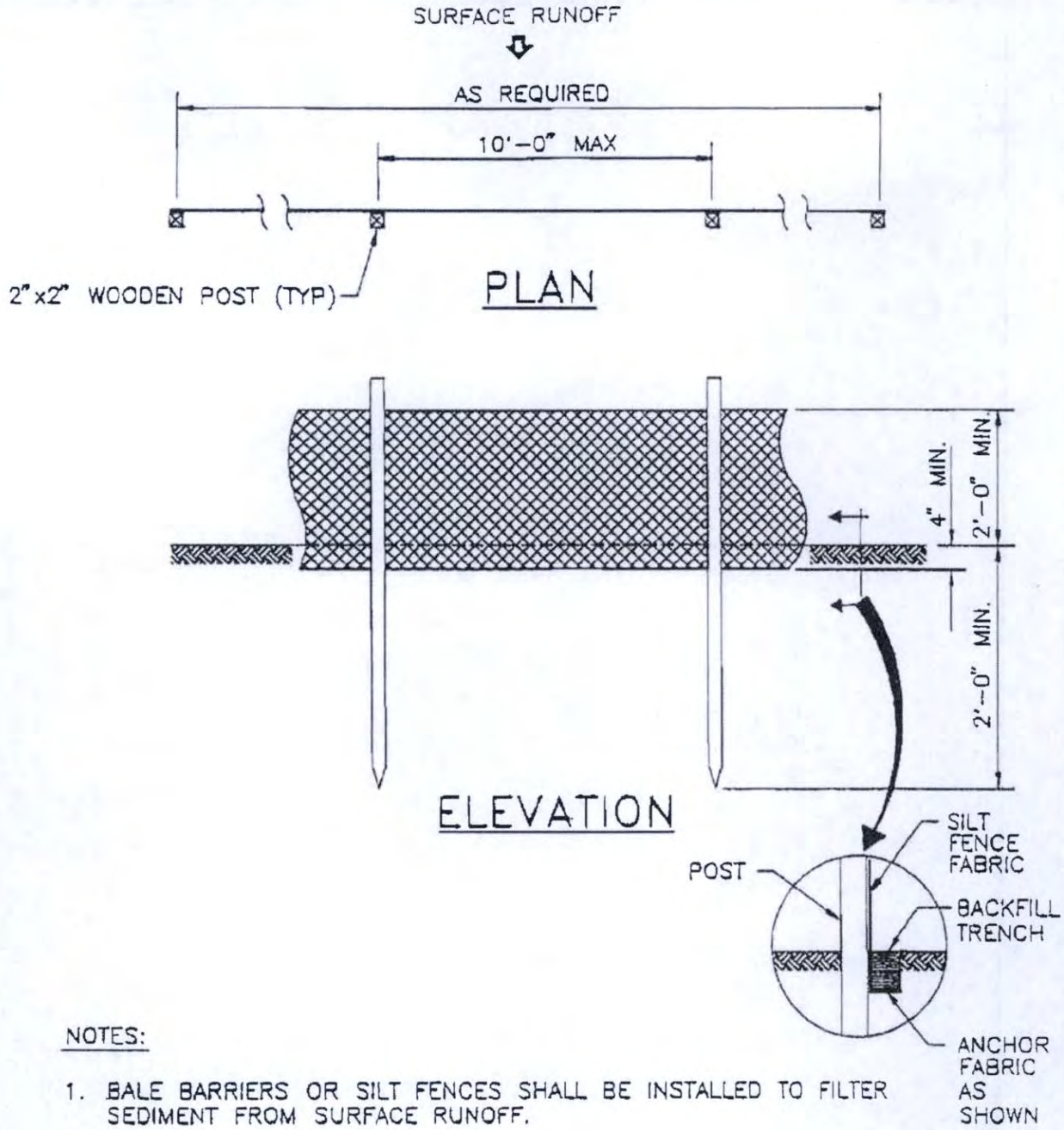


NOTES:

1. BALE BARRIERS OR SILT FENCES SHALL BE INSTALLED TO FILTER SEDIMENT FROM SURFACE RUNOFF.
2. INSTALLATIONS SHALL BE PERIODICALLY CHECKED AND IF FLOW IS OBSTRUCTED, BUILD-UP OF SEDIMENT SHALL BE REMOVED.
3. SEDIMENT BARRIERS SHALL BE REMOVED TO RESTORE NATURAL DRAINAGE PATTERN AFTER AREA IS STABILIZED.

**PGP Operating, LLC.**

PGP Operating, LLC.
17300 Brookwood Pkwy.
Vance, Al. 35490

BEST MANAGEMENT PRACTICES PLAN
DETAIL OC
TYPICAL OVERLAND CONTROL MEASURES

OCTOBER, 2017 SCALE: N.T.S.

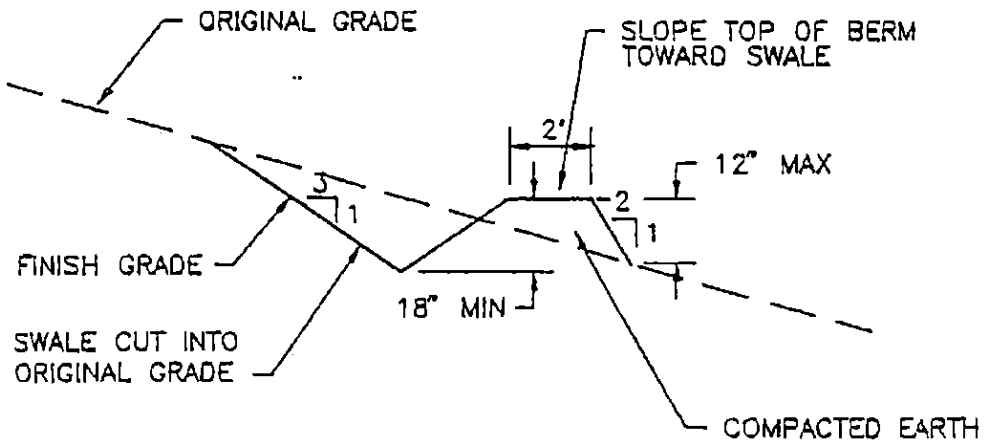


SECTION

PGP Operating, LLC.
17300 Brookwood Pkwy.
Vance, Al. 35490

**PGP Operating, LLC.**

BEST MANAGEMENT PRACTICES PLAN
DETAIL OC
TYPICAL OVERLAND CONTROL MEASURES

OCTOBER, 2017 SCALE: N.T.S.

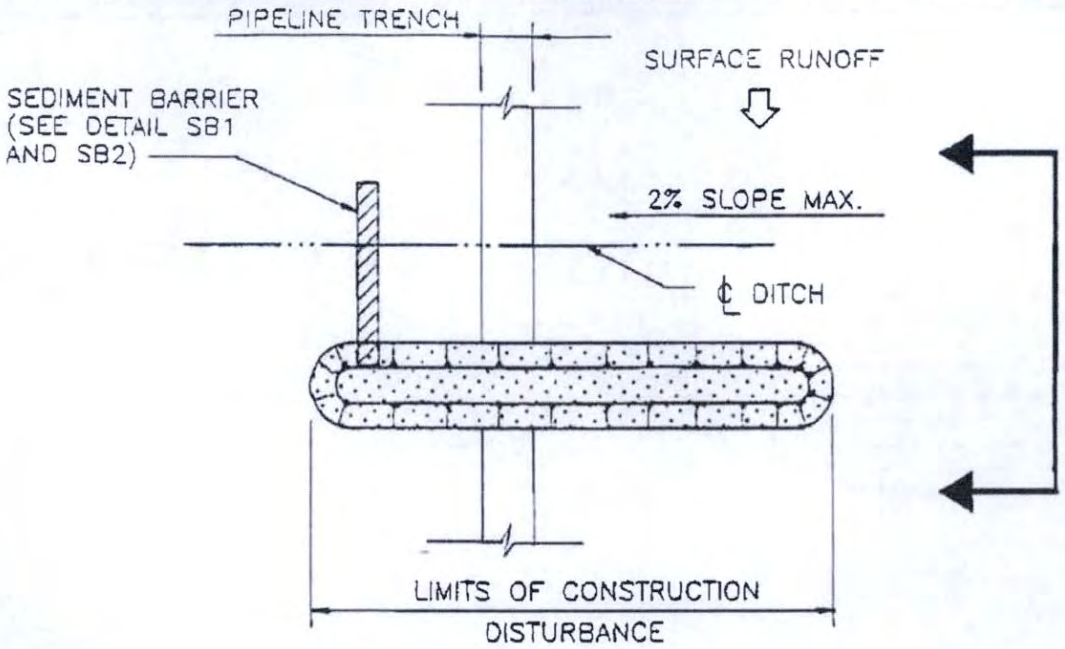


PLAN

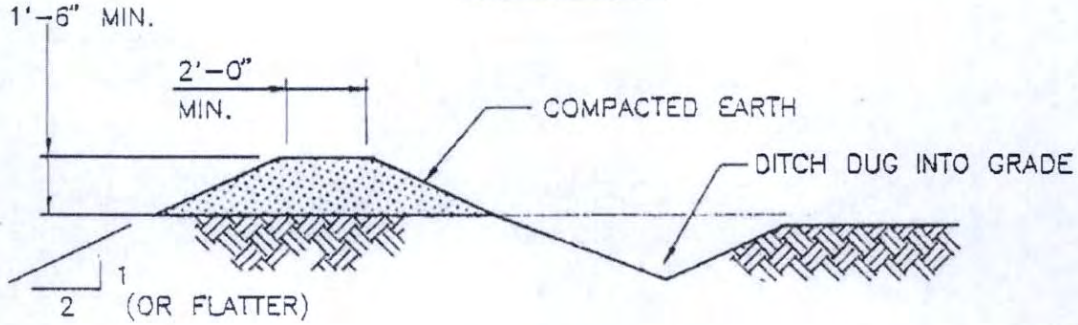


SECTION

**NOTES:**

1. DIVERSION TERRACES SHALL BE INSTALLED AND MAINTAINED DURING CONSTRUCTION AND AFTER CLEAN-UP OPERATIONS ON LONG UNINTERRUPTED SLOPES.
2. WHERE SLOPE OF CONSTRUCTION AREA EXCEEDS THAT FOR SAFE INSTALLATION, TERRACES SHALL BE INSTALLED AT BASE OF SLOPE ONLY.

**TYPICAL SPACING:**

| ROW SLOPE ABOVE TERRACE | | SPACING (FT.) |
|---|---|---|
| % | DEGREES | |
| < 5 | < 3± | 250 |
| 5 - 10 | 3± - 6± | 175 |
| 10 - 20 | 6± - 11± | 150 |
| 20 - 30 | 11± - 17± | 100 |
| >30 | >17± | 75 |

**PGP Operating, LLC.**

PGP Operating, LLC.
17300 Brookwood Pkwy.
Vance, Al. 35490

BEST MANAGEMENT PRACTICES PLAN
DETAIL OC
TYPICAL OVERLAND CONTROL MEASURES

OCTOBER, 2017

SCALE: N.T.S.

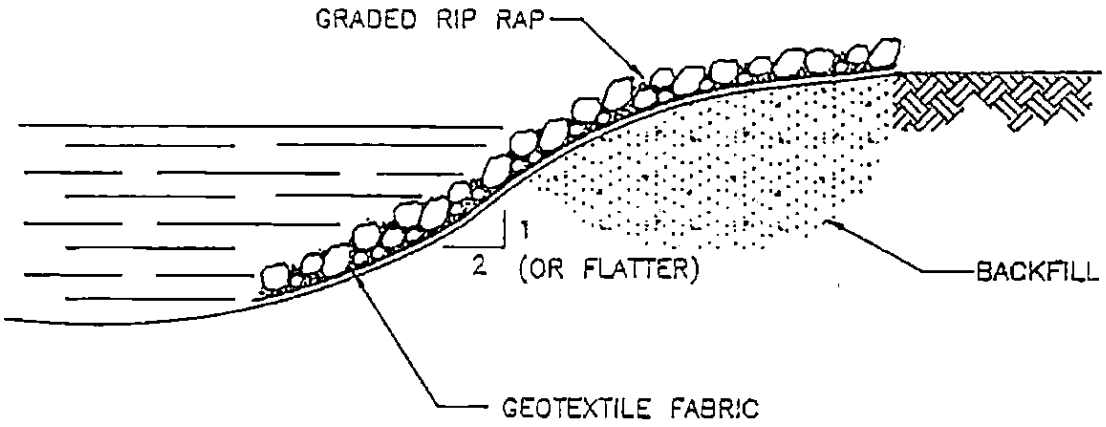


NOTES:

1. RIP RAP SHALL EXTEND COMPLETELY ACROSS DISTURBED AREA TO PROTECT ERODIBLE SURFACES WHEN STREAM VELOCITIES EXCEED 9 FEET PER SECOND AND WHERE DIRECTED BY PROJECT ENVIRONMENTAL INSPECTOR.
2. ROCK SHALL BE DURABLE FIELD OR QUARRY STONE OF APPROXIMATELY RECTANGULAR SHAPE AND SIZED TO RESIST MOVEMENT BY FLOWING WATER.
3. RIP RAP SHALL BE OF THE FOLLOWING GRADATION:

| STONE SIZE (IN.) MIN. | AVG. | MAX. | MIN. THICKNESS OF RIP RAP LAYER (IN.) |
|---|---|---|---|
| 3 | 6 | 12 | 12 |

4. AT LEAST 25% OF STONE SHALL BE LARGER THAN OR EQUAL TO SPECIFIED MAXIMUM STONE SIZE.
5. AT LEAST 50% OF STONE SHALL BE LARGER THAN SPECFIED AVERAGE STONE SIZE.
6. CEMENT BAGS OR SAND BAGS MAY BE SUBSTITUTED FOR ROCK RIP RAP AS APPROVED BY THE ENVIRONMENTAL INSPECTOR.

**PGP Operating, LLC.**

PGP Operating, LLC.
17300 Brookwood Pkwy.
Vance, Al. 35490

BEST MANAGEMENT PRACTICES PLAN
DETAIL OC
TYPICAL OVERLAND CONTROL MEASURES

OCTOBER, 2017 SCALE: N.T.S.

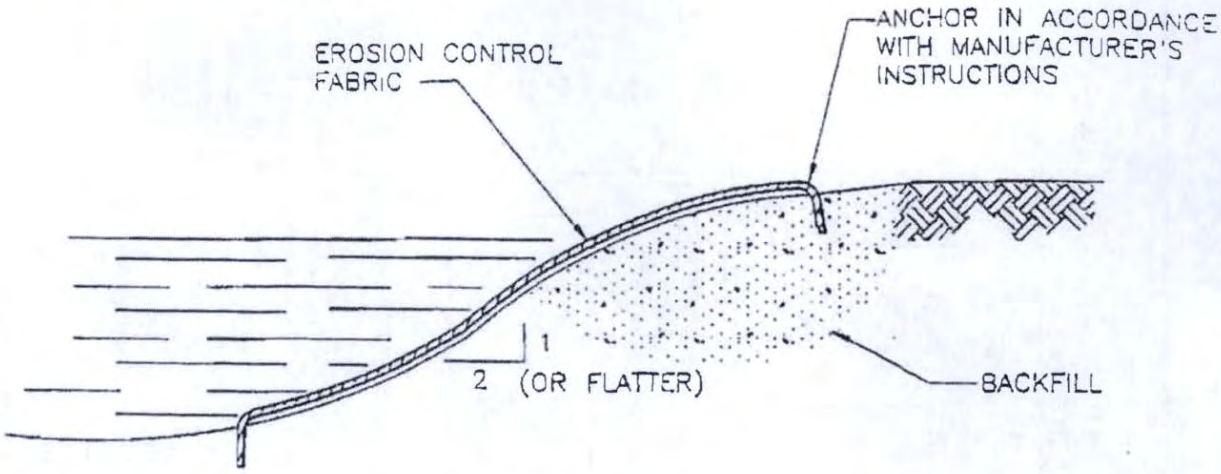


NOTES:

1. EROSION CONTROL FABRIC SHALL EXTEND COMPLETELY ACROSS DISTURBED AREA TO PROTECT ERODIBLE SURFACES.
2. INSTALL ON FRESHLY GRADED EMBANKMENTS TO SUPPORT VEGETATION.
3. INSTALL IN ACCORDANCE WITH MANUFACTURER'S INSTRUCTIONS.
4. WHEN DETERMINED NECESSARY BY THE PROJECT ENVIRONMENTAL INSPECTOR THE FOLLOWING EROSION CONTROL FABRICS (OR EQUAL) GUIDELINES ARE TO BE USED.

| WATER VELOCITY (FPS) | MATERIAL |
|---|---|
| <5 | CURLEX BLANKET |
| 5–10 | HI–VELOCITY CURLEX BLANKET |
| >10 | ENKAMAT 7010 OR 7020 |

PGP Operating, LLC.
17300 Brookwood Pkwy.
Vance, Al. 35490

**PGP Operating, LLC.**

BEST MANAGEMENT PRACTICES PLAN
DETAIL OC
TYPICAL OVERLAND CONTROL MEASURES

OCTOBER, 2017 SCALE: N.T.S.

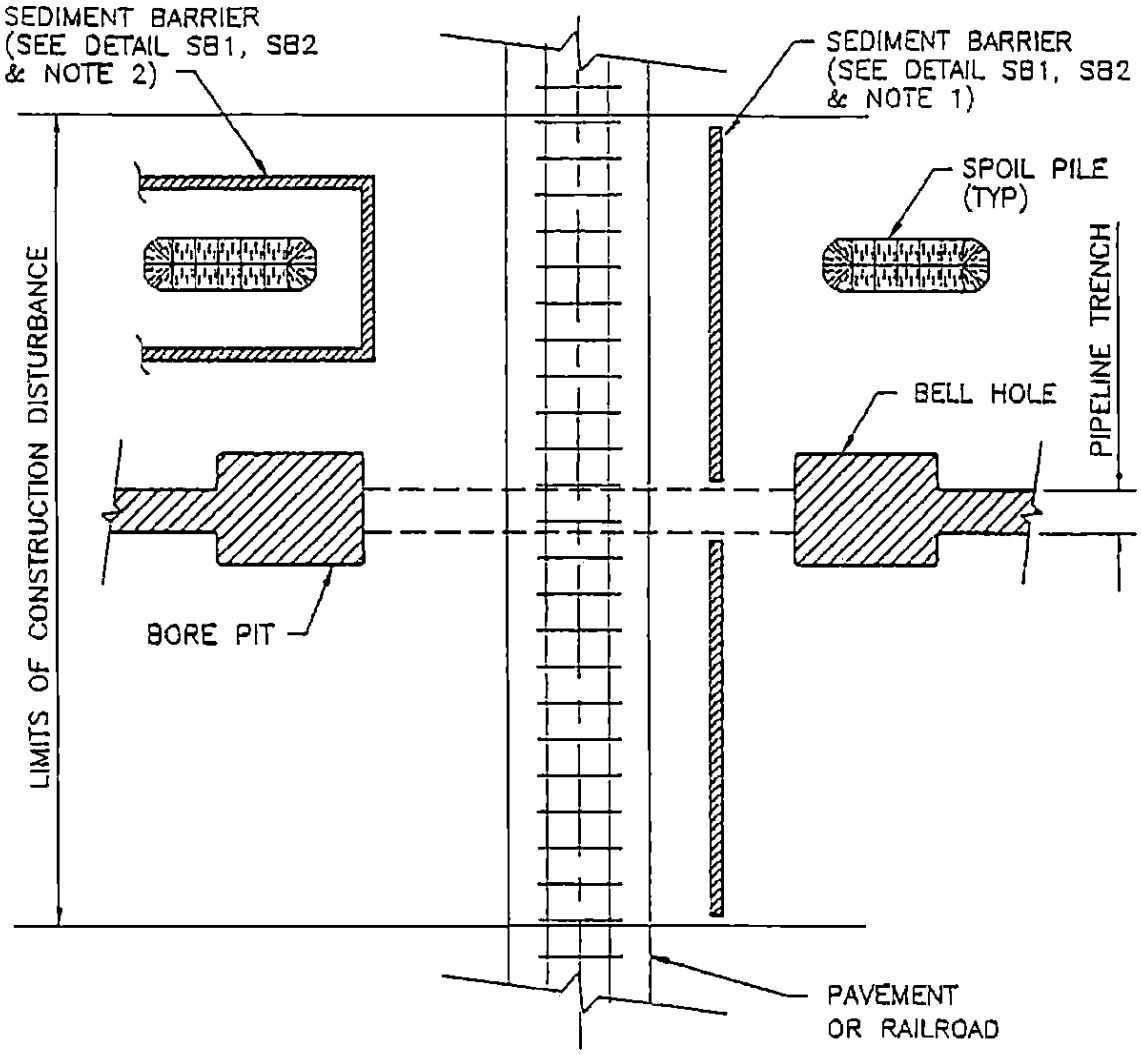


NOTES:

1. SEDIMENT BARRIERS SHALL BE INSTALLED ALONG EITHER SIDE OF ROAD OR RAILROAD AS REQUIRED TO INTERCEPT SURFACE RUNOFF.
2. PROTECTION FOR SPOIL PILE SHALL BE INSTALLED ONLY WHERE SEDIMENT BARRIERS ACROSS ENTIRE DISTURBED AREA ARE NOT REQUIRED.
3. WATER REMOVED FROM BORE PIT AND BELL HOLE SHALL BE FILTERED THROUGH SEDIMENT BARRIER (SEE DETAILS S81 & S82).

**PGP Operating, LLC.**

PGP Operating, LLC.
17300 Brookwood Pkwy.
Vance, Al. 35490

BEST MANAGEMENT PRACTICES PLAN
DETAIL OC
TYPICAL OVERLAND CONTROL MEASURES

OCTOBER, 2017 SCALE: N.T.S.

# APPENDIX B

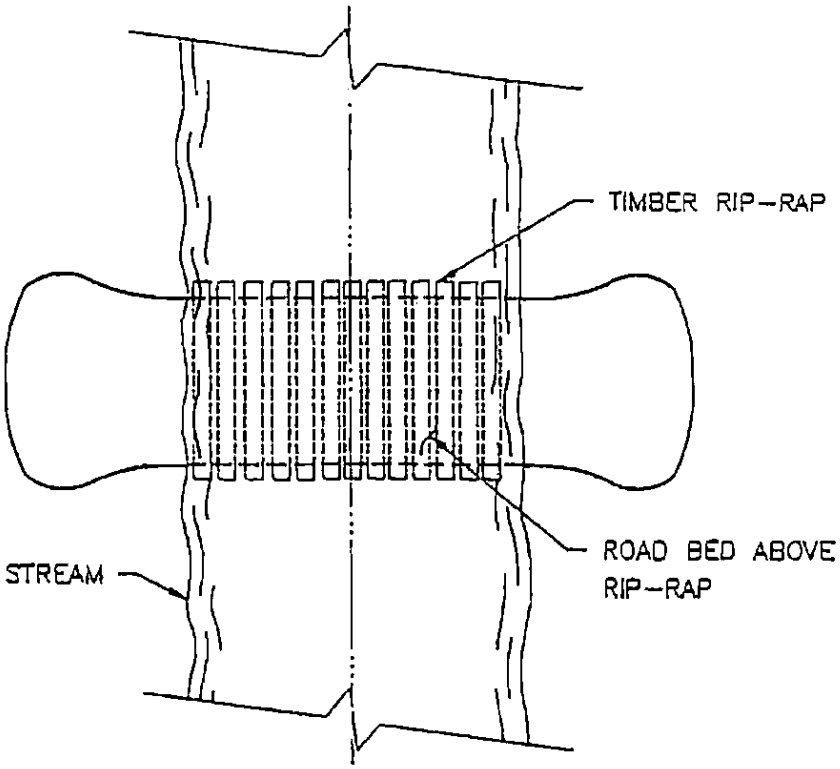


PLAN

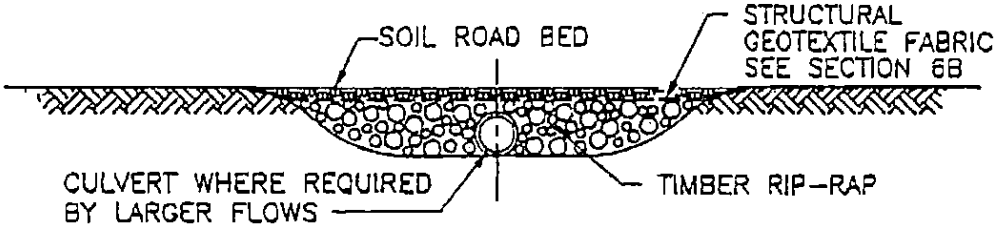


PROFILE

NOTES:

1. INSTALL TIMBER RIP-RAP IN ORDER TO MINIMIZE VOIDS BETWEEN TIMBERS.
2. PLACE STRUCTURAL GEOTEXTILE FABRIC ON TOP OF TIMBERS TO PROVIDE BASE FOR ROAD BED

**PGP Operating, LLC.**

PGP Operating, LLC.
17300 Brookwood Pkwy.
Vance, Al. 35490

BEST MANAGEMENT PRACTICES PLAN
DETAIL OC
TYPICAL OVERLAND CONTROL MEASURES

OCTOBER, 2017 SCALE: N.T.S.

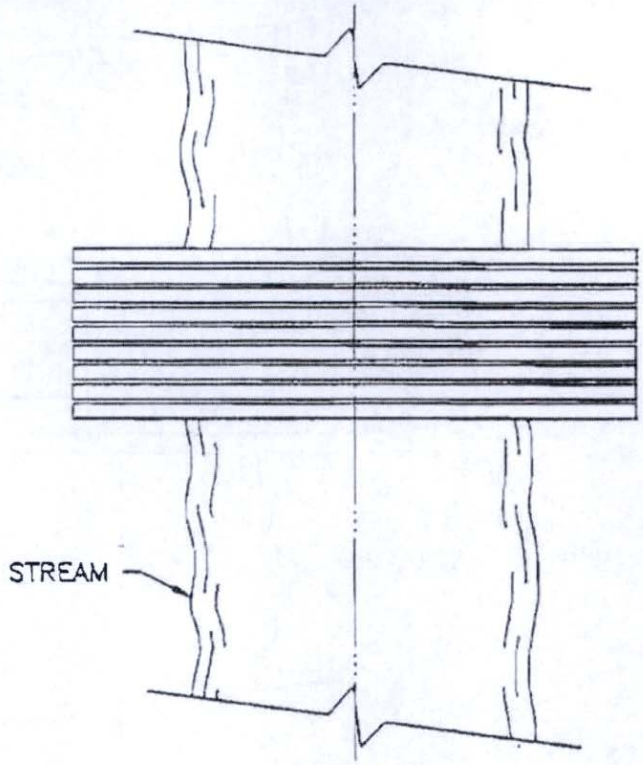


PLAN

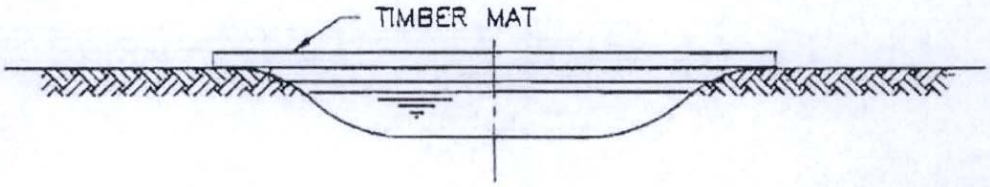


PROFILE

NOTES:

1. ALL MATERIALS SHALL BE COMPLETELY REMOVED DURING FINAL CLEANUP

**PGP Operating, LLC.**

PGP Operating, LLC.
17300 Brookwood Pkwy.
Vance, Al. 35490

BEST MANAGEMENT PRACTICES PLAN
DETAIL OC
TYPICAL OVERLAND CONTROL MEASURES

OCTOBER, 2017 SCALE: N.T.S.

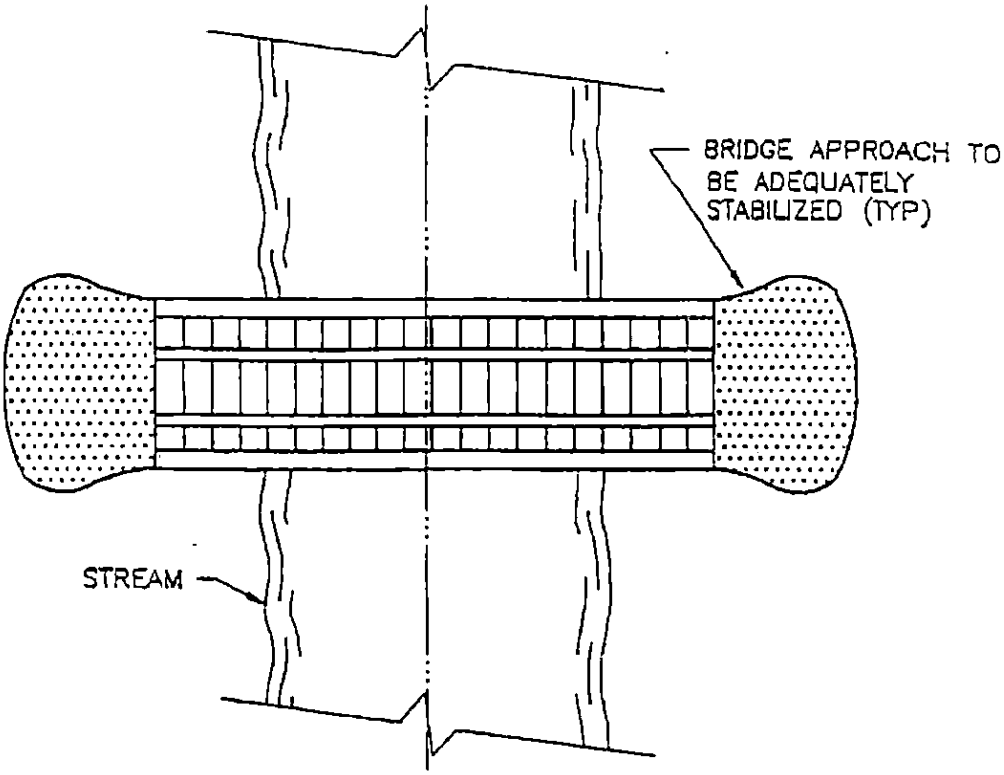


PLAN

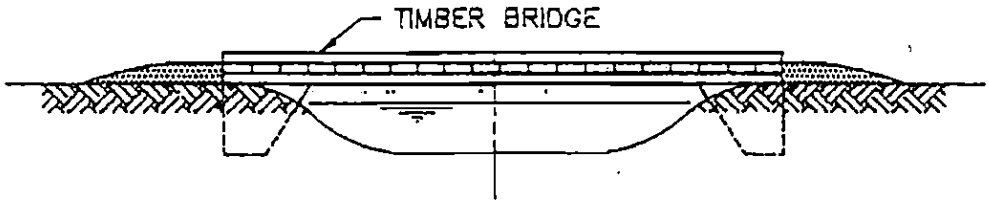


PROFILE

NOTES:

1. TIMBER BRIDGES SHALL BE ADEQUATELY ANCHORED ON AT LEAST ONE END
2. PERIODICALLY CHECK BRIDGE INSTALLATION AND REMOVE BUILD UP OF SEDIMENT OR DEBRIS ON BRIDGE.
2. MATERIALS PLACED IN STREAM CHANNEL SHALL BE SIZED TO RESIST MOVEMENT BY FLOWING WATER AND SHALL BE COMPLETELY REMOVED DURING FINAL CLEANUP.

**PGP Operating, LLC.**

PGP Operating, LLC.
17300 Brookwood Pkwy.
Vance, Al. 35490

BEST MANAGEMENT PRACTICES PLAN
DETAIL OC
TYPICAL OVERLAND CONTROL MEASURES

OCTOBER, 2017 SCALE: N.T.S.

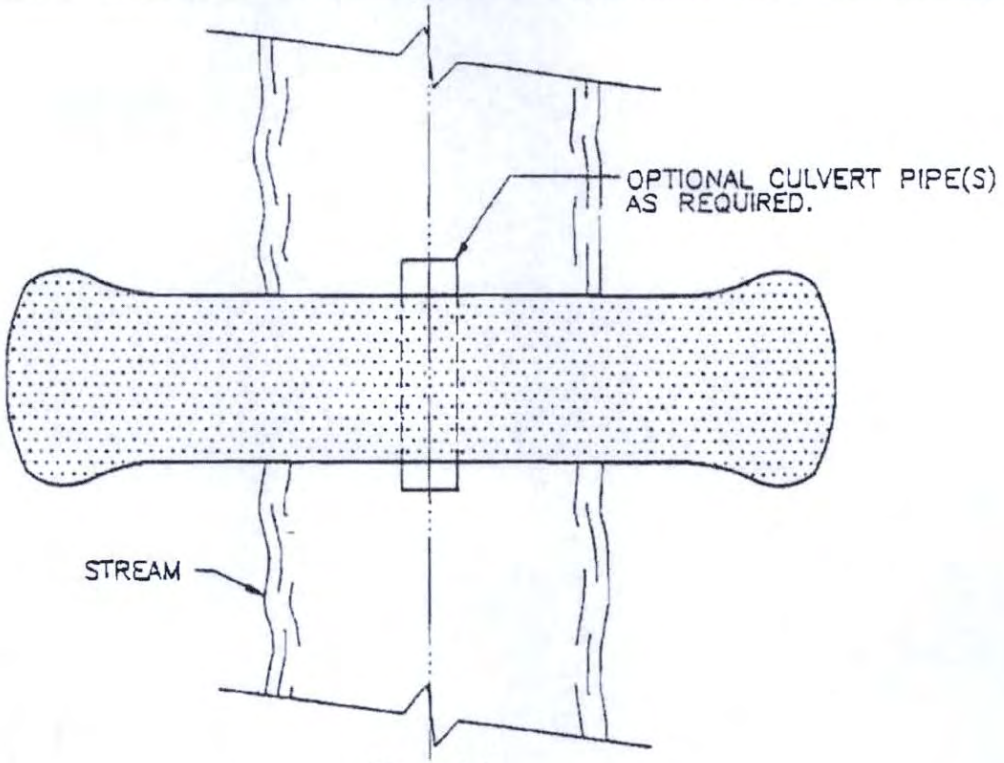


PLAN

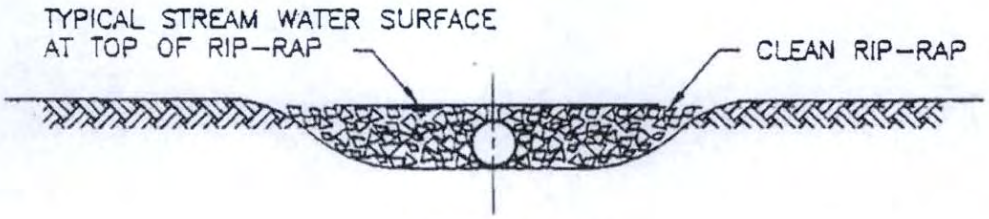


PROFILE

NOTES:

1. PERIODICALLY CHECK BRIDGE INSTALLATION AND REMOVE EXCESSIVE BUILD-UP OF SEDIMENT OR DEBRIS ON BRIDGE.

2. MATERIALS PLACED IN STREAM CHANNEL SHALL BE SIZED TO RESIST MOVEMENT BY FLOWING WATER AND SHALL BE COMPLETELY REMOVED DURING FINAL CLEANUP.

**PGP Operating, LLC.**

PGP Operating, LLC.
17300 Brookwood Pkwy.
Vance, Al. 35490

BEST MANAGEMENT PRACTICES PLAN
DETAIL OC
TYPICAL OVERLAND CONTROL MEASURES

OCTOBER. 2017 SCALE: N.T.S.

# PGP Operating, LLC
# Maxwell Crossing DSN001
# CORMIX Modeling

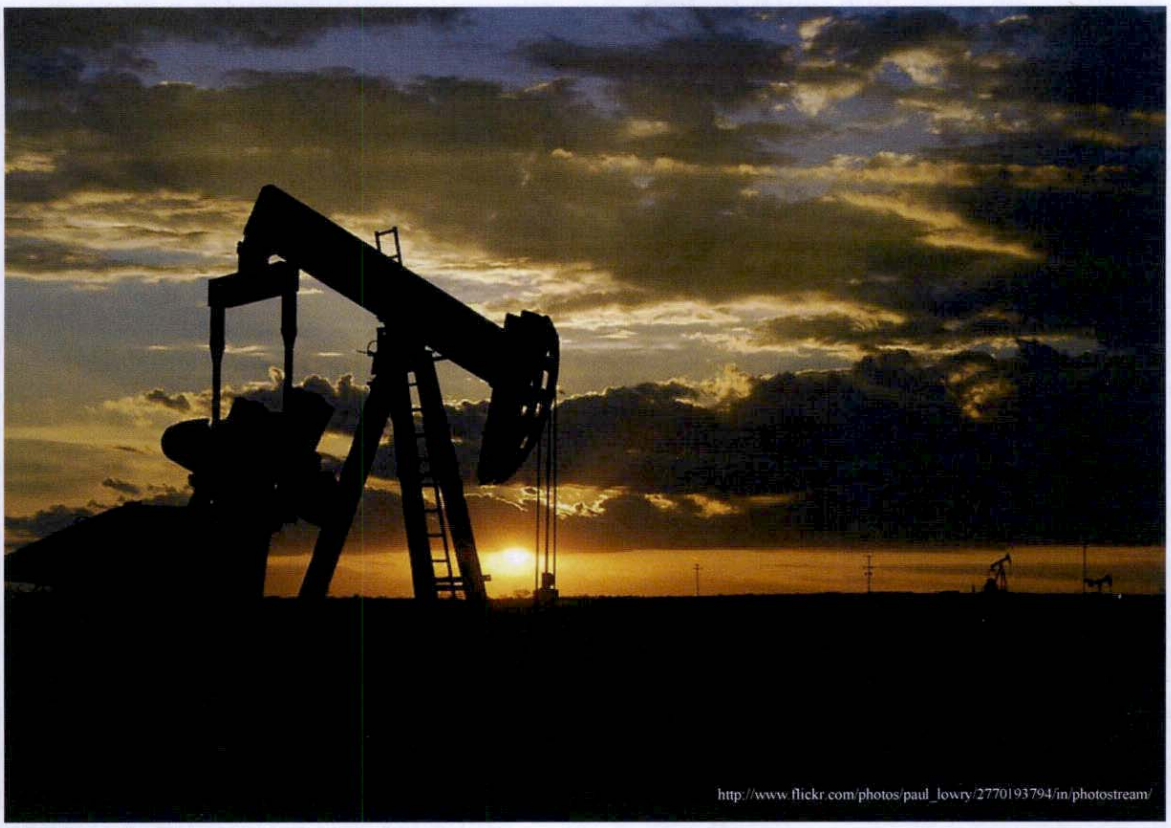


PGP OPERATING, LLC

Prepared By:

CFM Group

Civil and Environmental Engineers,
Scientists, Planners, and Surveyors

Table of Contents

1.0 Introduction ..... 1
2.0 Background ..... 1
2.1 NPDES ..... 1
2.2 CORMIX ..... 3
3.0 As-built Diffuser Analysis ..... 3
4.0 References ..... 4

**Appendix A: As-Built CORMIX Text Outputs**
**Appendix B: ADEM Form 455 and Accompanying Documents**

# 1.0 Introduction

This report was prepared on behalf of PGP Operating, LLC (formerly Energen Resources Corporation) in regards to the recent decision by the Alabama Department of Environmental Management (ADEM), in conjunction with the Environmental Protection Agency (EPA), to update how National Pollutant Discharge Elimination System (NPDES) limitations for coalbed methane operators (operators) in the state Alabama shall be determined. Previously, operators would use continuous real-time monitoring for conductivity and salinity, weekly downstream monitoring of actual instream chlorides, weekly dissolved oxygen (DO) monitoring, and quarterly acute toxicity screening performed at an instream waste concentration (IWC) (as determined using the aforementioned data) which had to meet the ADEM determined NPDES limits. The new methodology will be to correlate the Coalbed Methane Association of Alabama's (CMAA) permit rational with the rest of the state's industries by utilizing well documented and EPA approved plume modeling programs. CFM Group, LLC. (CFM) has determined the information in the following report using CORMIX and ADEM regulations found in *ADEM Admin. Code r. 335-6-6-.02 (eee)* and *ADEM Admin. Code r. 335-6-6-.15 (d)* in conjunction with the CH2M Hill NPDES Permit Basis report prepared for the CMAA.

# 2.0 Background

## *2.1 NPDES*

The revised permit rational will utilize the concentration of Chlorides as the IWC due to its potential to exceed water quality standards (WQS) and its associated toxicity. "For streams that have greater than a 100:1 dilution, the waterbody is considered "stream dominated" and the applicable toxicity criterion is acute. For streams that have less than a 100:1 dilution, the waterbody is considered "effluent dominated" and the applicable toxicity criterion is chronic. It is noted that for the Riverine PODs, the dilution is greater than 100:1, which means that the acute toxicity criterion applies." (CH2MHill).

The acute toxicity test will be performed at the zone of initial dilution (ZID) of the diffuser. The following is an excerpt from *ADEM Admin. Code r. 335-6-6-.02* defining how to determine the ZID:

> *(eee) "Zone of Initial Dilution" or "ZID" means that area extending from the port openings of a high rate diffuser to the initial edge of the mixing zone where due to great turbulence a constant instream waste concentration (IWC) cannot be determined. For purposes of this definition a high rate diffuser is a submerged outfall in the form of a single pipe outlet or of multiport design giving rise to one or several submerged discharge jets designed to induce mixing between the effluent and receiving stream. The diffuser will protect against surface impingement and bottom attachment of the submerged jet(s) and in general a minimum exit velocity of ten feet per second shall be provided. The length of the ZID and thereby the distance to the initial edge of the mixing zone shall not exceed the more stringent of the following requirements:*

*1. fifty times the discharge length scale (DLS) in any spatial direction, where the DLS is the square root of the cross-sectional area of any discharge outlet,*
*2. five times the water depth in any horizontal direction from the discharge outlet, or*
*3. no more than ten percent of the distance from the edge of the outfall structure to the leading edge of the mixing zone in any spatial direction.*

Requirements one and two can be calculated for the diffuser directly, but requirement three must be calculated using the mixing zone (MZ). The following is an excerpt from *ADEM Admin. Code r. 335-6-6-.15 (d)* defining how to determine the MZ in rivers:

*(d) Mixing zone prohibitions.*
*1. Mixing zones in streams shall not preclude passage of aquatic life up or down stream, shall not exceed a width of 50 percent of the stream width, shall not exceed a length of five times the width of the mixing zone, and shall not exceed an area of 25 percent of the stream cross-sectional area, and a mixing zone shall not encompass drinking water intakes.*

Using the above requirements, CFM will determine the MZ based upon the most stringent of the MZ requirements. CFM will then calculate the ZID using the most stringent of its requirements. CFM will then use CORMIX to model the as-built diffusers with information provided by the operator and determine if the current design will satisfy the new NPDES permit requirements. If the as-built designs are not acceptable, CFM will modify the as-built design as requested by the operator and run the CORMIX model in iterations until NPDES requirements are met. At this time the model outputs and an accompanying report will be delivered to the operator, and then ADEM, for review.

The following image gives a visual representation of the ZID and the MZ:

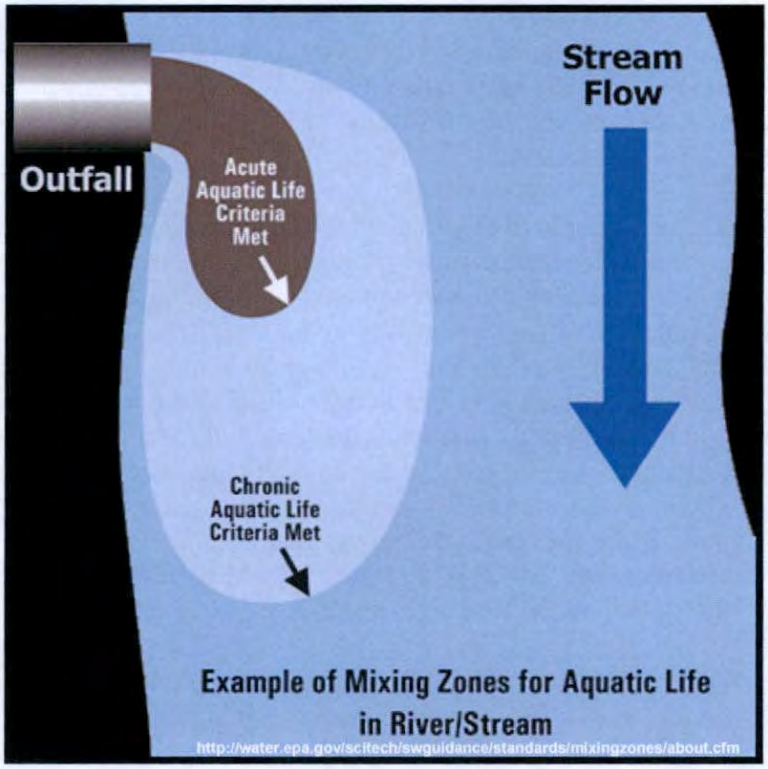


The ZID is the regulatory limit at which the acute water quality standard must be met. The MZ is the regulatory limit at which the chronic water quality standard must be met. As previously mentioned, the MZ will be determined for the purpose of calculating the most stringent of the ZID criteria.

### *2.2 CORMIX*

The CORMIX input parameters were selected by CH2MHill and outlined in *NPDES Permit Basis* along with the reasoning for choosing each. However, there are two parameters that are misleading from this document: Discharge Concentration and Non-Toxic Effluent: Water Quality Standard. In order to accommodate for ambient concentration, CORMIX inputs require that an 'excess' value be used (Doneker 62). This means that the values entered into the model are equal to the actual value minus the ambient background concentration for the specific POD of interest. For this case, the effluent concentration is11720 mg/L and the ambient concentration is 54.3 mg/L (CH2MHill). This means that when entered into the program 11665.7 mg/L will be used for the effluent concentration and 805.7 mg/L will be used for the Acute WQS for this case. These values are reflected in the CORMIX Data Input Forms found in this report.

## 3.0 As-built Diffuser Analysis

PGP Operating provided the parameters for the CORMIX analysis on the as-built design for Maxwell Crossing–DSN001 and information to complete engineering drawings of the diffuser. CFM used the information from the CH2MHill NPDES permit protocol document utilizing the low flow river data for the ambient conditions. The information

CFM entered into the model can be found at the end of this report in the CORMIX Data Input Form. Currently the as-built design follows a standard diffuser design where ports are oriented perpendicular to the main effluent line and are pointed upward at 90 degrees with respect to the river bottom. This diffuser is 216' (65.9m) long with 12 ports with equal spacing of the ports assumed.

CORMIX2 text outputs from both the Prediction File and Session report (found in Appendix A) show that as built the diffuser produces a plume that travels slightly upwards and then due to the high density characteristic of the of effluent, travels downward while being carried slightly forward in the low flow of the river at the 1Q10. The plume contacts the bottom after traveling forward 0.11m in approximately 7.6 seconds, and then travels forward along the bottom of the channel. The CORMIX2 model utilizes a slot diffuser design that spans the length of the diffuser (from the first port to the last port) and uses a slot width that makes the total slot area equivalent to the total port cross sectional area. The ZID was determined to be controlled by the Discharge Length Scale Criteria and is located 2.25m downstream. CORMIX2 was used to predict the IWC at 2.25m downstream as 4.667%. Under ADEM policy, this concentration is rounded to the tenths place and will be recorded as 4.7%.

As part of the ADEM policy governing diffuser analysis, CFM checked the design using the CORMIX1 model. CORMIX1 is used in tandem with CORMIX2 to determine whether or not the individual plumes are merged by the time they reach the ZID. The logic states that if the plume half-width (Bh) using CORMIX1 is greater than half of the port spacing (labeled SPAC in CORMIX2 diffuser discharge parameters), then the plumes are merged and CORMIX2 is the appropriate model. For this case, the port spacing (SPAC) is 5.99m and the plume half-width using CORMIX1 is 12.18m upstream and 10.20m downstream at the ZIDs. Since the plume half-width is greater than half of the port spacing (2.995m), CORMIX2 is the appropriate model to determine the IWC of this diffuser. The following CORMIX1 description is included for reference purposes.

The CORMIX1 model predicts that the plume discharging from an individual port at $1/12^{th}$ of the total flow rate will shoot upwards slightly as it travels slowly downstream due to the river's flow. The plume has a density greater than that of water, and as such turns downward shortly after leaving the port opening and reaching a height of 1.07m. The plume continues to fall forward under influence from the ambient flow, contacts the bottom causing some upstream intrusion, and reaches the ZID of 2.25m downstream at a concentration of 4.676%, and -2.25m upstream at a concentration of 7.49%.

## 4.0 References


ADEM. *ADEM Admin. Code r. 335-6-6-.xx Revised September 26, 2011.*

CH2MHill. *National Pollutant Discharge Elimination System Permit Basis: Water Quality-based Limitations for the Coalbed Methane Industry.* February 2012.

Doneker, R.L. and G.H. Jirka. *CORMIX User Manual.* December 2007.

# Appendix A:

# As-Built CORMIX Text

# CORMIX Data Input Form

## Project Legend

| | | | |
|---|---|---|---|
| Site Name: | PGP Operating, LLC - Maxwell Crossing - CMX2 | | |
| Design Case: | Avg. Effluent Data, Min. Ambient Data - As Built | | |
| Prepared By: | CFM Group | Date: | 5/9/2014 |

## Effluent Data

☑ **Non-Fresh Water Effluent Density**
Density $\rho_o$: 1005 kg/m$^3$

☐ **Fresh Water Effluent Density**
☐ Temperature $T_o$: °C ☐ Density $\rho_o$: kg/m$^3$

Discharge Excess Concentration: 100 % ☑ Effluent Flow Rate $Q_o$: 0.0031 m$^3$/s ☐ Effluent Velocity $U_o$: m/s

**Pollutant Types**

☑ Conservative ☐ Non Conservative: /day ☐ Heated - Heat Loss Coefficient W/m$^2$/°C

☐ **Brine** ☐ **Sediment:** Chunks % Sand % Coarse Silt % Clay %
Total Sediment Concentration: kg/m$^3$ Fine Silt %

## Ambient Geometry / Flow Field Data

**Average Depth $H_a$:** 4.88 m ☐ **Unbounded** ☑ **Bounded:** Width: 160.55 m
**Depth at Discharge $H_d$:** 4.88 m Appearance: ☐ Uniform ☐ Slight Meander ☐ Highly Irregular

☑ **Steady**
☑ Ambient Flowrate $Q_a$: 7.957 m$^3$/s
☐ Ambient Velocity $U_a$: m/s

☐ **Unsteady**
Period hr Max Velocity m/s Tidal Velocity at this time $U_a$: m/s
☐ At Time: hr ☐ At Slack - ΔTime: hr ☐ At Time: hr After Slack

☐ **Single Slope**
Slope S: %
Near Shore Velocity m/s
Near Shore Darcy-Weisbach f

☐ **Near and Far Slope**
☐ Near Shore Slope $S_1$: % ☐ Far Slope $S_2$: %
☐ Near Shore Velocity $U_{a1}$: m/s ☐ Far Shore Velocity $U_{a2}$: m/s
☐ Near Shore Darcy-Weisbach $f_1$: ☐ Far Shore Darcy-Weisbach $f_2$:
☐ Breakpoint: m

☑ Manning's n: 0.032 Wind Speed: 2.0 m/s

## Ambient Density Data

☑ **Uniform** ☑ **Fresh Water:** ☑ Temperature 32.2 °C ☐ Density $\rho_a$: kg/m$^3$ ☐ **Non Fresh:** Density $\rho_a$: kg/m$^3$
☐ **Stratified** ☐ **Type A** ☐ **Type B**: Pycnocline Height m ☐ **Type C**: Pycnocline Height m Jump kg/m$^3$/°C
☐ **Brine and Sediment Only** Density $\rho$: At Surface $\rho_{as}$: kg/m$^3$/°C At Bottom $\rho_{ab}$: kg/m$^3$/°C
Level 1 Density $\rho_1$: kg/m$^3$/°C Sub 1: m Level 2 Density $\rho_2$: kg/m$^3$/°C Sub 2: m

## Discharge Geometry Data

### CORMIX 1 - Single Port

Nearest Bank: ☐ Left ☐ Right
Distance to Nearest Bank m
Verticle angle $\theta_0$: °
Horizontal Angle $\sigma_0$: °
☐ Port Diameter $D_0$: m
☐ Port Area $A_0$: m$^2$

**Submerged**
Port Height above bottom $h_0$: m

**Above Surface**
Port Height above surface: m
☐ Jet - Like ☐ Spray
☐ Area
Deflector Plate:
☐ Without ☐ With

### CORMIX 2 - Multiport

Nearest Bank: ☑ Left ☐ Right
Orientation:
☐ Unidirectional ☐ Staged
☑ Alternating / Vertical
Number of Openings: 12 Diffuser Length: 65.87 m
Distance to 1st end point $YB_1$: 47.16 m
Distance to 2nd end point $YB_2$: 106.90 m
Port Height $h_0$: 0.9144 m Port Diameter $D_0$: 0.0508 m
Contraction Ratio 0.9

**Angles**
Vertical Angle θ: 90 ° Horizontal Angle σ: - °
Alignment Angle γ: 115 °
Relative Orientation Angle β: 90 °
Nozzel Direction:
☑ Same ☐ Fanned Out

### CORMIX 3 - Surface Discharge

Discharge Located: ☐ Left ☐ Right
Horizontal Angle σ: °
Local Depth at Discharge Outlet: m
☐ **Flush** ☐ **Co-flowing**
☐ **Protruding:**
Distance from Bank m

**Discharge Outlet**
☐ **Channel**
Width m
Depth $b_0$: m
☐ **Pipe** Diameter $D_0$: m
Bottom Invert Depth m
Local Bottom Slope at Channel Entry
°

## Mixing Zone Data Inputs

☑ **Non -Toxic effluent**
☑ Water Qualtity Standard: ☐ Chronic 175.7 mg/L ☑ Acute 805.7 mg/L ☐ No Water Quality Standard
☐ **Toxic effluent**
Criterion Continuous Concentration: Criterion Maximum Concentration:

☑ **Maximum Mixing Zone Boundaries**
☐ Trajectory: m ☑ Distance Downstream: 401.37 m ☑ Width: 80.27 m
☑ Area: 195.74 m$^2$
Region of Interest: 5000 m
Number of Output Steps 200

**CFM** Group

Prepared By:
**Civil and Environmental Engineers, Scientists, Planners, and Surveyors**

# CORMIX Data Output Form

## Project Legend

| | | | |
|---|---|---|---|
| Site Name: | PGP Operating, LLC - Maxwell Crossing - CMX2 | | |
| Design Case: | Avg. Effluent Data, Min. Ambient Data - As Built | | |
| Prepared By: | CFM Group | Date: | 5/9/2014 |

## Mixing Zone Data Inputs

☑ **Non -Toxic effluent**

☑ Water Qualtity Standard: ☐ Chronic 175.7 mg/L ☑ Acute 805.7 mg/L ☐ No Water Quality Standard

☐ **Toxic effluent**

Criterion Continuous Concentration Criterion Maximum Concentration

☑ **Maximum Mixing Zone Boundaries**

☐ Trajectory: m ☑ Distance Downstream: 401.37 m ☑ Width: 80.27 m

☑ Area: 195.74 $m^2$

Region of Interest: 5000 m

Number of Output Steps 200

## Mixing Zone Data Outputs

| RMZ Summary | Plume Location Downstream | | Pollutant Concentration | | Half-Width of Plume | |
|---|---|---|---|---|---|---|
| Width Criteria | 24.84 | m | 3.82% | | 40.14 | m |
| Area Criteria | - | m | - | | | m |
| Length Criteria | | m | | | | m |
| ☐ Chronic WQS | | m | | mg/L | | m |
| ☑ Acute WQS | 0.14 | m | 805.7 | mg/L | 0.12 | m |

## Zone of Initial Dilution Data Outputs

| ZID Summary | Distance Downstream | | Pollutant Concentration | | Pollutant Concentration | |
|---|---|---|---|---|---|---|
| Discharge Length Scale Criteria | 2.25 | m | 544.45 | mg/L | 4.667% | † |
| Water Depth Criteria | 24.38 | m | | mg/L | | † |
| Leading Edge of MZ Criteria | 2.48 | m | | mg/L | | † |

Discharge Excess Concentration: 11665.7 mg/L

Acute WQS Percentage of Effluent: 6.907 %* @ 0.14 m

ZID Limits Percentage of Effluent: 4.667 %* @ 2.25 m

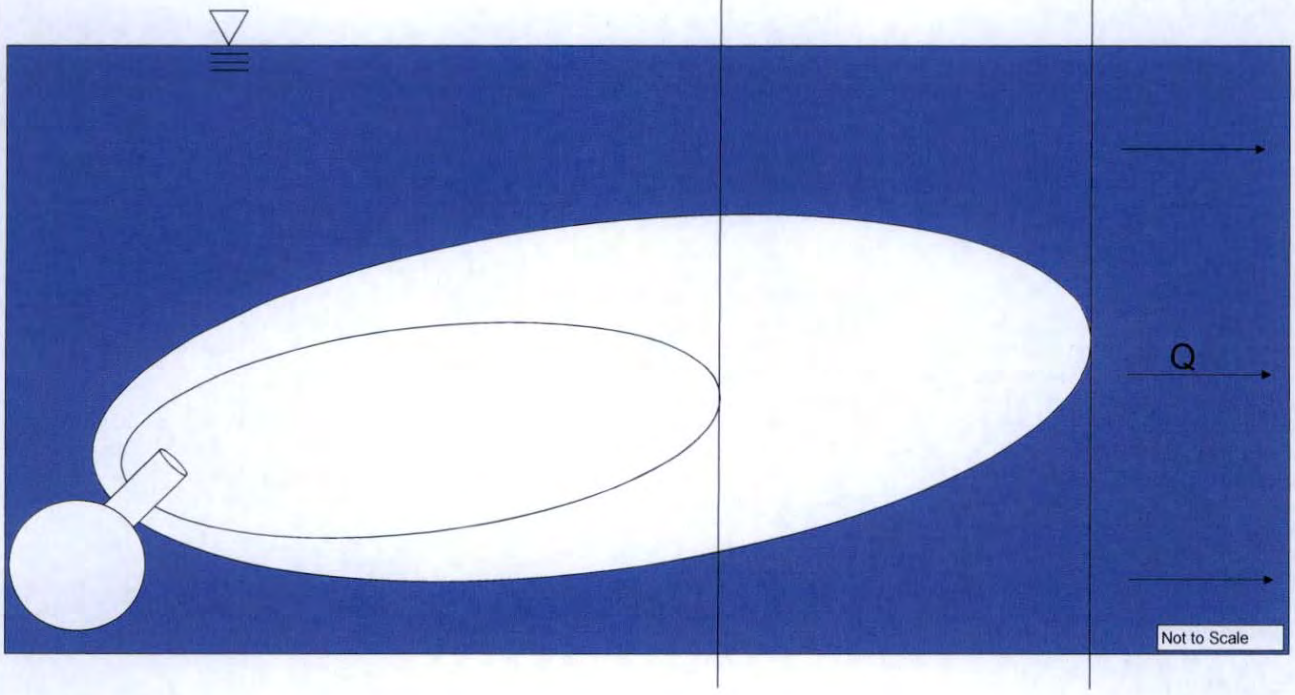


Yellow highlighted values are inputs by user, gray values are calculated by spreadsheet.
†Percentage of effluent as determined by CORMIX.
*Percentage of effluent is calculated, not from CORMIX.

Prepared By:
CFM Group
Civil and Environmental Engineers, Scientists, Planners, and Surveyors

```
CORMIX SESSION REPORT:
XXXXXXXXXXXXXXXXXXXXXXXXXXXXXXXXXXXXXXXXXXXXXXXXXXXXXXXXXXXXXXXXXXXXXXXXXXXXXX
                      CORMIX MIXING ZONE EXPERT SYSTEM
                          CORMIX Version 8.0GT
                     HYDRO2:Version-8.0.0.0  April,2012
SITE NAME/LABEL:                Energen Resources -  Maxwell Crossing
  DESIGN CASE:                  Avg. Effluent Data, Min Ambient Data - As Built
  FILE NAME:                    P:\Client Files\Energen\2012138 - CORMIX\CORMIX Model Files\Maxwell
Crossing\Maxwell Crossing - CMX2.prd
  Using subsystem CORMIX2:     Multiport Diffuser Discharges
  Start of session:             05/09/2014--14:02:50
*****************************************************************************
SUMMARY OF INPUT DATA:
-----------------------------------------------------------------------------
AMBIENT PARAMETERS:
  Cross-section                          = bounded
  Width                          BS      = 160.55 m
  Channel regularity             ICHREG = 3
  Ambient flowrate               QA      = 5.97 m^3/s
  Average depth                  HA      = 4.88 m
  Depth at discharge             HD      = 4.88 m
  Ambient velocity               UA      = 0.0076 m/s
  Darcy-Weisbach friction factor F       = 0.0474
    Calculated from Manning's n          = 0.032
  Wind velocity                  UW      = 2 m/s
  Stratification Type            STRCND = U
  Surface temperature                    = 32.22 degC
  Bottom temperature                     = 32.22 degC
  Calculated FRESH-WATER DENSITY values:
  Surface density                RHOAS   = 994.9541 kg/m^3
  Bottom density                 RHOAB   = 994.9541 kg/m^3
-----------------------------------------------------------------------------
DISCHARGE PARAMETERS:            Submerged Multiport Diffuser Discharge
  Diffuser type                  DITYPE = alternating perpendicular
  Diffuser length                LD      = 65.87 m
  Nearest bank                           = left
  Diffuser endpoints             YB1     = 47.16 m;    YB2 = 106.90 m
  Number of openings             NOPEN   = 12
  Number of Risers               NRISER = 12
  Ports/Nozzles per Riser        NPPERR  = 1
  Spacing between risers/openings SPAC   = 5.99 m
  Port/Nozzle diameter           D0      = 0.0482 m
    with contraction ratio               = 0.9
  Equivalent slot width          B0      = 0.0003 m
  Total area of openings         TA0     = 0.0219 m^2
  Discharge velocity             U0      = 0.14 m/s
  Total discharge flowrate       Q0      = 0.0031 m^3/s
  Discharge port height          H0      = 0.91 m
  Nozzle arrangement             BETYPE = near vertical discharge
  Diffuser alignment angle       GAMMA   = 115 deg
  Vertical discharge angle       THETA   = 90 deg
  Actual Vertical discharge angle THEAC  = 90 deg
  Horizontal discharge angle     SIGMA   = 0 deg
  Relative orientation angle     BETA    = 90 deg
  Discharge density              RHO0    = 1005 kg/m^3
  Density difference             DRHO    = -10.0459 kg/m^3
  Buoyant acceleration           GP0     = -0.099 m/s^2
  Discharge concentration        C0      = 100 %
  Surface heat exchange coeff.   KS      = 0 m/s
  Coefficient of decay           KD      = 0 /s
-----------------------------------------------------------------------------
FLUX VARIABLES PER UNIT DIFFUSER LENGTH:
  Discharge (volume flux)        q0      = 0.000047 m^2/s
  Momentum flux                  m0      = 0.000007 m^3/s^2
  Buoyancy flux                  j0      = -0.000005 m^3/s^3
-----------------------------------------------------------------------------
DISCHARGE/ENVIRONMENT LENGTH SCALES:
  LQ  = 0.00 m         Lm  = 0.11 m         LM  = 0.02 m
  lm' = 99999 m         Lb' = 99999 m         La  = 99999 m
  (These refer to the actual discharge/environment length scales.)
```

```
-----------------------------------------------------------------------------
NON-DIMENSIONAL PARAMETERS:
Slot Froude number                FRO     = 24.69
  Port/nozzle Froude number         FRDO    = 2.05
  Velocity ratio                    R       = 18.57
-----------------------------------------------------------------------------
MIXING ZONE / TOXIC DILUTION ZONE / AREA OF INTEREST PARAMETERS:
  Toxic discharge                           = no
  Water quality standard specified          = no
  Regulatory mixing zone                    = no
  Region of interest                        = 5000 m downstream
*****************************************************************************
HYDRODYNAMIC CLASSIFICATION:
  *------------------------*
  | FLOW CLASS   = MNU2 |
  *------------------------*
  This flow configuration applies to a layer corresponding to the full water
  depth at the discharge site.
  Applicable layer depth = water depth = 4.88 m
*****************************************************************************
MIXING ZONE EVALUATION (hydrodynamic and regulatory summary):

-----------------------------------------------------------------------------
X-Y-Z Coordinate system:
  Origin is located at the bottom below the port center:
    77.03 m from the left bank/shore.
  Number of display steps NSTEP = 200 per module.
-----------------------------------------------------------------------------
NEAR-FIELD REGION (NFR) CONDITIONS :
Note: The NFR is the zone of strong initial mixing.  It has no regulatory
  implication.  However, this information may be useful for the discharge
  designer because the mixing in the NFR is usually sensitive to the
  discharge design conditions.
  Pollutant concentration at NFR edge  c = 4.7628 %
  Dilution at edge of NFR              s = 21.0
  NFR Location:                        x = 0.36 m
    (centerline coordinates)           y = 0 m
                                       z = 0 m
  NFR plume dimensions:  half-width (bh) = 30.00 m
                         thickness (bv) = 0.14 m
Cumulative travel time:       40.1562 sec.
-----------------------------------------------------------------------------
Buoyancy assessment:
  The effluent density is greater than the surrounding ambient water
  density at the discharge level.
  Therefore, the effluent is NEGATIVELY BUOYANT and will tend to sink towards
  the bottom.
IMPORTANT NOTE:
Since the effluent is NEGATIVELY BUOYANT, it is STRONGLY recommended that you consider using the
Brine or Sediment options for Effluent specification for a more detailed analysis.

CORMIX will however continue with the current simulation.
-----------------------------------------------------------------------------
FAR-FIELD MIXING SUMMARY:
  Plume becomes laterally fully mixed at 130.95 m downstream.
-----------------------------------------------------------------------------
PLUME BANK CONTACT SUMMARY:
  Plume in bounded section contacts nearest bank at 100.90 m downstream.
  Plume contacts second bank at 130.95 m downstream.
************************ TOXIC DILUTION ZONE SUMMARY ************************
No TDZ was specified for this simulation.
********************** REGULATORY MIXING ZONE SUMMARY **********************
No RMZ and no ambient water quality standard have been specified.
********************* FINAL DESIGN ADVICE AND COMMENTS *********************
CORMIX2 uses the TWO-DIMENSIONAL SLOT DIFFUSER CONCEPT to represent
  the actual three-dimensional diffuser geometry.  Thus, it approximates
  the details of the merging process of the individual jets from each
  port/nozzle.
In the present design, the spacing between adjacent ports/nozzles
  (or riser assemblies) is of the order of, or less than, the local
```

water depth so that the slot diffuser approximation holds well.

Nevertheless, if this is a final design, the user is advised to use a final CORMIX1 (single port discharge) analysis, with discharge data for an individual diffuser jet/plume, in order to compare to the present near-field prediction.

---

REMINDER: The user must take note that HYDRODYNAMIC MODELING by any known technique is NOT AN EXACT SCIENCE.

Extensive comparison with field and laboratory data has shown that the CORMIX predictions on dilutions and concentrations (with associated plume geometries) are reliable for the majority of cases and are accurate to within about +-50% (standard deviation).

As a further safeguard, CORMIX will not give predictions whenever it judges the design configuration as highly complex and uncertain for prediction.

```
CORMIX2 PREDICTION FILE:
2222222222222222222222222222222222222222222222222222222222222222222222222222222222222222222222222222
                        CORMIX MIXING ZONE EXPERT SYSTEM
              Subsystem CORMIX2: Multiport Diffuser Discharges
                              CORMIX Version 8.0GT
                       HYDRO2 Version 8.0.0.0 April 2012
-----------------------------------------------------------------------------------------------
-----------------------------------------------------------------------------------------------
CASE DESCRIPTION
 Site name/label:   Energen Resources -  Maxwell Crossing
 Design case:       Avg. Effluent Data, Min Ambient Data - As Built
 FILE NAME:         P:\...iles\Maxwell Crossing\Maxwell Crossing - CMX2.prd
 Time stamp:        Fri May  9 14:02:50 2014

ENVIRONMENT PARAMETERS (metric units)
 Bounded section
 BS     =    160.55  AS     =    783.48  QA     =      5.97  ICHREG= 3
 HA     =      4.88  HD     =      4.88
 UA     =     0.008  F      =     0.047 USTAR =0.5869E-03
 UW     =     2.000 UWSTAR=0.2198E-02
 Uniform density environment
 STRCND=  U          RHOAM =  994.9541

DIFFUSER DISCHARGE PARAMETERS (metric units)
 Diffuser type:     DITYPE= alternating_perpendicular
 BANK  =  LEFT      DISTB =     77.03  YB1    =     47.16  YB2    =    106.90
 LD     =     65.87  NOPEN =   12       SPAC   =      5.99
 D0     =     0.048 A0     =     0.002 H0     =      0.91  SUB0   =      3.97
 D0INP =      0.051 CR0    =     0.900
 Nozzle/port arrangement:   near_vertical_discharge
 GAMMA =    115.00  THETA =     90.00  SIGMA =      0.00  BETA   =     90.00
 U0     =     0.142 Q0     =     0.003       =0.3100E-02
 RHO0   = 1005.0000  DRHO0 =-.1005E+02  GP0    =-.9902E-01
 C0     =0.1000E+03  CUNITS=  %
 IPOLL =  1          KS     =0.0000E+00  KD     =0.0000E+00

FLUX VARIABLES - PER UNIT DIFFUSER LENGTH (metric units)
 q0     =0.4706E-04  m0     =0.6665E-05  j0     =-.4660E-05  SIGNJ0=     -1.0
 Associated 2-d length scales (meters)
 lQ=B   =     0.000 lM     =     0.02  lm     =      0.11
 lmp    =  99999.00  lbp    =  99999.00  la     =  99999.00

FLUX VARIABLES - ENTIRE DIFFUSER (metric units)
 Q0     =0.3100E-02  M0     =0.4390E-03  J0     =-.3070E-03
 Associated 3-d length scales (meters)
 LQ     =     0.04  LM     =     0.17  Lm     =      2.75  Lb     =    692.10
                                        Lmp    =  99999.00  Lbp    =  99999.00

NON-DIMENSIONAL PARAMETERS
 FR0    =     24.69  FRD0   =     2.05  R      =     18.57  PL     =  140.00
 (slot)              (port/nozzle)


FLOW CLASSIFICATION
 2222222222222222222222222222222222222222
 2  Flow class (CORMIX2)       =    MNU2   2
 2  Applicable layer depth HS =     4.88  2
 2222222222222222222222222222222222222222

MIXING ZONE / TOXIC DILUTION / REGION OF INTEREST PARAMETERS
 C0     =0.1000E+03  CUNITS=  %
 NTOX   =  0
 NSTD   =  0
 REGMZ  =  0
 XINT   =   5000.00  XMAX   =   5000.00

X-Y-Z COORDINATE SYSTEM:
    ORIGIN is located at the bottom and the diffuser mid-point:
        77.03 m  from the LEFT  bank/shore.
    X-axis points downstream, Y-axis points to left, Z-axis points upward.
```

NSTEP = 200 display intervals per module

---

---

BEGIN MOD101: DISCHARGE MODULE (SINGLE PORT AT DIFFUSER CENTER)

| X | Y | Z | S | C | BV | BH | Uc | TT |
|---|---|---|---|---|---|---|---|---|
| 0.00 | 0.00 | 0.91 | 1.0 | 0.100E+03 | 0.02 | 0.02 | 0.142 | .00000E+00 |

END OF MOD101: DISCHARGE MODULE (SINGLE PORT AT DIFFUSER CENTER)

---

---

BEGIN CORJET (MOD110): JET/PLUME NEAR-FIELD MIXING REGION

Negatively buoyant jet/plume transition motion in strong crossflow.

Zone of flow establishment: THETAE= 88.72 SIGMAE= 0.00
LE = 0.20 XE = 0.00 YE = 0.00 ZE = 1.11

Profile definitions:
BV = Gaussian 1/e (37%) half-width, in vertical plane normal to trajectory
BH = before merging: Gaussian 1/e (37%) half-width in horizontal plane normal to trajectory
after merging: top-hat half-width in horizontal plane parallel to diffuser line
S = hydrodynamic centerline dilution
C = centerline concentration (includes reaction effects, if any)
Uc = Local centerline excess velocity (above ambient)
TT = Cumulative travel time

| X | Y | Z | S | C | BV | BH | Uc | TT |
|---|---|---|---|---|---|---|---|---|
| Individual jet/plumes before merging: | | | | | | | | |
| 0.00 | 0.00 | 1.11 | 1.0 | 0.100E+03 | 0.02 | 0.02 | 0.142 | .00000E+00 |
| 0.00 | 0.00 | 1.11 | 1.0 | 0.100E+03 | 0.02 | 0.02 | 0.142 | .50564E-02 |
| 0.00 | 0.00 | 1.12 | 1.0 | 0.100E+03 | 0.03 | 0.03 | 0.142 | .31288E-01 |
| 0.00 | 0.00 | 1.12 | 1.0 | 0.100E+03 | 0.03 | 0.03 | 0.142 | .65131E-01 |
| 0.00 | 0.00 | 1.13 | 1.0 | 0.100E+03 | 0.03 | 0.03 | 0.142 | .95683E-01 |
| 0.00 | 0.00 | 1.14 | 1.0 | 0.100E+03 | 0.03 | 0.03 | 0.142 | .13584E+00 |
| 0.00 | 0.00 | 1.14 | 1.0 | 0.100E+03 | 0.03 | 0.03 | 0.129 | .17297E+00 |
| 0.00 | 0.00 | 1.15 | 1.0 | 0.100E+03 | 0.03 | 0.03 | 0.111 | .22346E+00 |
| 0.00 | 0.00 | 1.15 | 1.0 | 0.100E+03 | 0.04 | 0.04 | 0.095 | .27260E+00 |
| 0.00 | 0.00 | 1.16 | 1.0 | 0.100E+03 | 0.04 | 0.04 | 0.072 | .34581E+00 |
| 0.00 | 0.00 | 1.16 | 1.0 | 0.100E+03 | 0.05 | 0.05 | 0.047 | .43292E+00 |
| Maximum jet height has been reached. | | | | | | | | |
| 0.01 | 0.00 | 1.17 | 1.0 | 0.982E+02 | 0.07 | 0.07 | 0.024 | .75721E+00 |
| 0.01 | 0.00 | 1.16 | 1.0 | 0.992E+02 | 0.05 | 0.05 | 0.057 | .86671E+00 |
| 0.01 | 0.00 | 1.16 | 1.0 | 0.979E+02 | 0.04 | 0.04 | 0.080 | .95036E+00 |
| 0.01 | 0.00 | 1.15 | 1.0 | 0.965E+02 | 0.04 | 0.04 | 0.095 | .10061E+01 |
| 0.01 | 0.00 | 1.15 | 1.1 | 0.947E+02 | 0.04 | 0.04 | 0.109 | .10640E+01 |
| 0.01 | 0.00 | 1.14 | 1.1 | 0.931E+02 | 0.04 | 0.04 | 0.118 | .11074E+01 |
| 0.01 | 0.00 | 1.13 | 1.1 | 0.912E+02 | 0.03 | 0.03 | 0.128 | .11554E+01 |
| 0.01 | 0.00 | 1.13 | 1.1 | 0.895E+02 | 0.03 | 0.03 | 0.136 | .11929E+01 |
| 0.01 | 0.00 | 1.12 | 1.1 | 0.874E+02 | 0.03 | 0.03 | 0.142 | .12356E+01 |
| 0.01 | 0.00 | 1.12 | 1.2 | 0.857E+02 | 0.03 | 0.03 | 0.142 | .12696E+01 |
| 0.01 | 0.00 | 1.11 | 1.2 | 0.836E+02 | 0.03 | 0.03 | 0.142 | .13089E+01 |
| 0.01 | 0.00 | 1.11 | 1.2 | 0.819E+02 | 0.03 | 0.03 | 0.142 | .13407E+01 |
| 0.01 | 0.00 | 1.10 | 1.3 | 0.799E+02 | 0.03 | 0.03 | 0.142 | .13777E+01 |
| 0.01 | 0.00 | 1.10 | 1.3 | 0.782E+02 | 0.03 | 0.03 | 0.142 | .14079E+01 |
| 0.01 | 0.00 | 1.09 | 1.3 | 0.762E+02 | 0.03 | 0.03 | 0.142 | .14434E+01 |
| 0.01 | 0.00 | 1.09 | 1.3 | 0.746E+02 | 0.03 | 0.03 | 0.142 | .14725E+01 |
| 0.01 | 0.00 | 1.08 | 1.4 | 0.726E+02 | 0.03 | 0.03 | 0.142 | .15069E+01 |
| 0.01 | 0.00 | 1.07 | 1.4 | 0.711E+02 | 0.03 | 0.03 | 0.142 | .15352E+01 |
| 0.01 | 0.00 | 1.07 | 1.4 | 0.692E+02 | 0.03 | 0.03 | 0.142 | .15688E+01 |
| 0.01 | 0.00 | 1.06 | 1.5 | 0.677E+02 | 0.03 | 0.03 | 0.142 | .15965E+01 |
| 0.01 | 0.00 | 1.06 | 1.5 | 0.659E+02 | 0.03 | 0.03 | 0.142 | .16295E+01 |
| 0.01 | 0.00 | 1.05 | 1.6 | 0.645E+02 | 0.03 | 0.03 | 0.142 | .16568E+01 |
| 0.01 | 0.00 | 1.05 | 1.6 | 0.628E+02 | 0.03 | 0.03 | 0.142 | .16894E+01 |
| 0.02 | 0.00 | 1.04 | 1.6 | 0.612E+02 | 0.03 | 0.03 | 0.142 | .17219E+01 |
| 0.02 | 0.00 | 1.04 | 1.7 | 0.599E+02 | 0.04 | 0.04 | 0.142 | .17488E+01 |
| 0.02 | 0.00 | 1.03 | 1.7 | 0.584E+02 | 0.04 | 0.04 | 0.142 | .17810E+01 |
| 0.02 | 0.00 | 1.02 | 1.8 | 0.571E+02 | 0.04 | 0.04 | 0.142 | .18078E+01 |

| | | | | | | | | |
|---|---|---|---|---|---|---|---|---|
| 0.02 | 0.00 | 1.02 | 1.8 | 0.557E+02 | 0.04 | 0.04 | 0.142 | .18399E+01 |
| 0.02 | 0.00 | 1.01 | 1.8 | 0.545E+02 | 0.04 | 0.04 | 0.142 | .18665E+01 |
| 0.02 | 0.00 | 1.01 | 1.9 | 0.531E+02 | 0.04 | 0.04 | 0.142 | .18985E+01 |
| 0.02 | 0.00 | 1.00 | 1.9 | 0.520E+02 | 0.04 | 0.04 | 0.142 | .19252E+01 |
| 0.02 | 0.00 | 1.00 | 2.0 | 0.507E+02 | 0.04 | 0.04 | 0.142 | .19572E+01 |
| 0.02 | 0.00 | 0.99 | 2.0 | 0.497E+02 | 0.04 | 0.04 | 0.142 | .19838E+01 |
| 0.02 | 0.00 | 0.99 | 2.1 | 0.485E+02 | 0.04 | 0.04 | 0.142 | .20158E+01 |
| 0.02 | 0.00 | 0.98 | 2.1 | 0.475E+02 | 0.04 | 0.04 | 0.142 | .20425E+01 |
| 0.02 | 0.00 | 0.97 | 2.2 | 0.464E+02 | 0.04 | 0.04 | 0.142 | .20746E+01 |
| 0.02 | 0.00 | 0.97 | 2.2 | 0.455E+02 | 0.04 | 0.04 | 0.142 | .21014E+01 |
| 0.02 | 0.00 | 0.96 | 2.3 | 0.444E+02 | 0.04 | 0.04 | 0.142 | .21335E+01 |
| 0.02 | 0.00 | 0.96 | 2.3 | 0.436E+02 | 0.04 | 0.04 | 0.142 | .21603E+01 |
| 0.02 | 0.00 | 0.95 | 2.3 | 0.426E+02 | 0.04 | 0.04 | 0.142 | .21926E+01 |
| 0.02 | 0.00 | 0.95 | 2.4 | 0.417E+02 | 0.04 | 0.04 | 0.142 | .22195E+01 |
| 0.02 | 0.00 | 0.94 | 2.5 | 0.408E+02 | 0.04 | 0.04 | 0.142 | .22519E+01 |
| 0.02 | 0.00 | 0.94 | 2.5 | 0.400E+02 | 0.04 | 0.04 | 0.142 | .22790E+01 |
| 0.02 | 0.00 | 0.93 | 2.6 | 0.392E+02 | 0.04 | 0.04 | 0.142 | .23115E+01 |
| 0.02 | 0.00 | 0.93 | 2.6 | 0.384E+02 | 0.04 | 0.04 | 0.142 | .23387E+01 |
| 0.02 | 0.00 | 0.92 | 2.7 | 0.376E+02 | 0.04 | 0.04 | 0.142 | .23714E+01 |
| 0.02 | 0.00 | 0.91 | 2.7 | 0.369E+02 | 0.05 | 0.05 | 0.142 | .23987E+01 |
| 0.02 | 0.00 | 0.91 | 2.8 | 0.362E+02 | 0.05 | 0.05 | 0.142 | .24315E+01 |
| 0.02 | 0.00 | 0.90 | 2.8 | 0.355E+02 | 0.05 | 0.05 | 0.142 | .24589E+01 |
| 0.03 | 0.00 | 0.90 | 2.9 | 0.348E+02 | 0.05 | 0.05 | 0.142 | .24920E+01 |
| 0.03 | 0.00 | 0.89 | 2.9 | 0.342E+02 | 0.05 | 0.05 | 0.142 | .25196E+01 |
| 0.03 | 0.00 | 0.89 | 3.0 | 0.335E+02 | 0.05 | 0.05 | 0.142 | .25528E+01 |
| 0.03 | 0.00 | 0.88 | 3.0 | 0.329E+02 | 0.05 | 0.05 | 0.142 | .25805E+01 |
| 0.03 | 0.00 | 0.88 | 3.1 | 0.323E+02 | 0.05 | 0.05 | 0.142 | .26139E+01 |
| 0.03 | 0.00 | 0.87 | 3.2 | 0.316E+02 | 0.05 | 0.05 | 0.142 | .26474E+01 |
| 0.03 | 0.00 | 0.87 | 3.2 | 0.311E+02 | 0.05 | 0.05 | 0.142 | .26754E+01 |
| 0.03 | 0.00 | 0.86 | 3.3 | 0.305E+02 | 0.05 | 0.05 | 0.142 | .27090E+01 |
| 0.03 | 0.00 | 0.85 | 3.3 | 0.300E+02 | 0.05 | 0.05 | 0.142 | .27372E+01 |
| 0.03 | 0.00 | 0.85 | 3.4 | 0.294E+02 | 0.05 | 0.05 | 0.142 | .27710E+01 |
| 0.03 | 0.00 | 0.84 | 3.5 | 0.290E+02 | 0.05 | 0.05 | 0.142 | .27993E+01 |
| 0.03 | 0.00 | 0.84 | 3.5 | 0.284E+02 | 0.05 | 0.05 | 0.142 | .28334E+01 |
| 0.03 | 0.00 | 0.83 | 3.6 | 0.280E+02 | 0.05 | 0.05 | 0.142 | .28619E+01 |
| 0.03 | 0.00 | 0.83 | 3.6 | 0.275E+02 | 0.05 | 0.05 | 0.142 | .28961E+01 |
| 0.03 | 0.00 | 0.82 | 3.7 | 0.271E+02 | 0.05 | 0.05 | 0.142 | .29248E+01 |
| 0.03 | 0.00 | 0.82 | 3.8 | 0.266E+02 | 0.05 | 0.05 | 0.142 | .29592E+01 |
| 0.03 | 0.00 | 0.81 | 3.8 | 0.262E+02 | 0.06 | 0.06 | 0.142 | .29880E+01 |
| 0.03 | 0.00 | 0.80 | 3.9 | 0.257E+02 | 0.06 | 0.06 | 0.142 | .30227E+01 |
| 0.03 | 0.00 | 0.80 | 3.9 | 0.253E+02 | 0.06 | 0.06 | 0.142 | .30516E+01 |
| 0.03 | 0.00 | 0.79 | 4.0 | 0.249E+02 | 0.06 | 0.06 | 0.142 | .30865E+01 |
| 0.03 | 0.00 | 0.79 | 4.1 | 0.245E+02 | 0.06 | 0.06 | 0.142 | .31156E+01 |
| 0.03 | 0.00 | 0.78 | 4.1 | 0.241E+02 | 0.06 | 0.06 | 0.142 | .31507E+01 |
| 0.04 | 0.00 | 0.78 | 4.2 | 0.238E+02 | 0.06 | 0.06 | 0.142 | .31800E+01 |
| 0.04 | 0.00 | 0.77 | 4.3 | 0.234E+02 | 0.06 | 0.06 | 0.142 | .32152E+01 |
| 0.04 | 0.00 | 0.77 | 4.3 | 0.230E+02 | 0.06 | 0.06 | 0.142 | .32447E+01 |
| 0.04 | 0.00 | 0.76 | 4.4 | 0.227E+02 | 0.06 | 0.06 | 0.142 | .32801E+01 |
| 0.04 | 0.00 | 0.76 | 4.5 | 0.224E+02 | 0.06 | 0.06 | 0.142 | .33098E+01 |
| 0.04 | 0.00 | 0.75 | 4.5 | 0.220E+02 | 0.06 | 0.06 | 0.142 | .33454E+01 |
| 0.04 | 0.00 | 0.74 | 4.6 | 0.217E+02 | 0.06 | 0.06 | 0.142 | .33752E+01 |
| 0.04 | 0.00 | 0.74 | 4.7 | 0.214E+02 | 0.06 | 0.06 | 0.142 | .34110E+01 |
| 0.04 | 0.00 | 0.73 | 4.7 | 0.211E+02 | 0.06 | 0.06 | 0.142 | .34410E+01 |
| 0.04 | 0.00 | 0.73 | 4.8 | 0.207E+02 | 0.06 | 0.06 | 0.142 | .34770E+01 |
| 0.04 | 0.00 | 0.72 | 4.9 | 0.205E+02 | 0.06 | 0.06 | 0.142 | .35071E+01 |
| 0.04 | 0.00 | 0.72 | 5.0 | 0.202E+02 | 0.06 | 0.06 | 0.142 | .35434E+01 |
| 0.04 | 0.00 | 0.71 | 5.0 | 0.199E+02 | 0.06 | 0.06 | 0.142 | .35737E+01 |
| 0.04 | 0.00 | 0.71 | 5.1 | 0.196E+02 | 0.07 | 0.07 | 0.142 | .36101E+01 |
| 0.04 | 0.00 | 0.70 | 5.2 | 0.193E+02 | 0.07 | 0.07 | 0.142 | .36466E+01 |
| 0.04 | 0.00 | 0.69 | 5.2 | 0.191E+02 | 0.07 | 0.07 | 0.142 | .36771E+01 |
| 0.04 | 0.00 | 0.69 | 5.3 | 0.188E+02 | 0.07 | 0.07 | 0.142 | .37139E+01 |
| 0.04 | 0.00 | 0.68 | 5.4 | 0.185E+02 | 0.07 | 0.07 | 0.142 | .37446E+01 |
| 0.04 | 0.00 | 0.68 | 5.5 | 0.183E+02 | 0.07 | 0.07 | 0.142 | .37815E+01 |
| 0.04 | 0.00 | 0.67 | 5.5 | 0.181E+02 | 0.07 | 0.07 | 0.142 | .38123E+01 |
| 0.05 | 0.00 | 0.67 | 5.6 | 0.178E+02 | 0.07 | 0.07 | 0.142 | .38494E+01 |
| 0.05 | 0.00 | 0.66 | 5.7 | 0.176E+02 | 0.07 | 0.07 | 0.142 | .38804E+01 |
| 0.05 | 0.00 | 0.66 | 5.8 | 0.173E+02 | 0.07 | 0.07 | 0.142 | .39177E+01 |
| 0.05 | 0.00 | 0.65 | 5.8 | 0.171E+02 | 0.07 | 0.07 | 0.142 | .39489E+01 |
| 0.05 | 0.00 | 0.64 | 5.9 | 0.169E+02 | 0.07 | 0.07 | 0.142 | .39864E+01 |
| 0.05 | 0.00 | 0.64 | 6.0 | 0.167E+02 | 0.07 | 0.07 | 0.142 | .40177E+01 |

| | | | | | | | | |
|---|---|---|---|---|---|---|---|---|
| 0.05 | 0.00 | 0.63 | 6.1 | 0.165E+02 | 0.07 | 0.07 | 0.142 | .40554E+01 |
| 0.05 | 0.00 | 0.63 | 6.1 | 0.163E+02 | 0.07 | 0.07 | 0.142 | .40869E+01 |
| 0.05 | 0.00 | 0.62 | 6.2 | 0.161E+02 | 0.07 | 0.07 | 0.142 | .41247E+01 |
| 0.05 | 0.00 | 0.62 | 6.3 | 0.159E+02 | 0.07 | 0.07 | 0.142 | .41563E+01 |
| 0.05 | 0.00 | 0.61 | 6.4 | 0.157E+02 | 0.07 | 0.07 | 0.142 | .41944E+01 |
| 0.05 | 0.00 | 0.61 | 6.5 | 0.155E+02 | 0.08 | 0.08 | 0.142 | .42262E+01 |
| 0.05 | 0.00 | 0.60 | 6.5 | 0.153E+02 | 0.08 | 0.08 | 0.142 | .42644E+01 |
| 0.05 | 0.00 | 0.60 | 6.6 | 0.151E+02 | 0.08 | 0.08 | 0.142 | .42963E+01 |
| 0.05 | 0.00 | 0.59 | 6.7 | 0.149E+02 | 0.08 | 0.08 | 0.142 | .43347E+01 |
| 0.05 | 0.00 | 0.59 | 6.8 | 0.148E+02 | 0.08 | 0.08 | 0.142 | .43668E+01 |
| 0.05 | 0.00 | 0.58 | 6.9 | 0.146E+02 | 0.08 | 0.08 | 0.142 | .44054E+01 |
| 0.05 | 0.00 | 0.57 | 6.9 | 0.144E+02 | 0.08 | 0.08 | 0.142 | .44376E+01 |
| 0.06 | 0.00 | 0.57 | 7.0 | 0.142E+02 | 0.08 | 0.08 | 0.142 | .44764E+01 |
| 0.06 | 0.00 | 0.56 | 7.1 | 0.141E+02 | 0.08 | 0.08 | 0.142 | .45088E+01 |
| 0.06 | 0.00 | 0.56 | 7.2 | 0.139E+02 | 0.08 | 0.08 | 0.142 | .45477E+01 |
| 0.06 | 0.00 | 0.55 | 7.3 | 0.138E+02 | 0.08 | 0.08 | 0.142 | .45803E+01 |
| 0.06 | 0.00 | 0.55 | 7.3 | 0.136E+02 | 0.08 | 0.08 | 0.142 | .46194E+01 |
| 0.06 | 0.00 | 0.54 | 7.4 | 0.135E+02 | 0.08 | 0.08 | 0.142 | .46521E+01 |
| 0.06 | 0.00 | 0.54 | 7.5 | 0.133E+02 | 0.08 | 0.08 | 0.142 | .46914E+01 |
| 0.06 | 0.00 | 0.53 | 7.6 | 0.131E+02 | 0.08 | 0.08 | 0.142 | .47308E+01 |
| 0.06 | 0.00 | 0.52 | 7.7 | 0.130E+02 | 0.08 | 0.08 | 0.142 | .47637E+01 |
| 0.06 | 0.00 | 0.52 | 7.8 | 0.129E+02 | 0.08 | 0.08 | 0.142 | .48032E+01 |
| 0.06 | 0.00 | 0.51 | 7.9 | 0.127E+02 | 0.08 | 0.08 | 0.142 | .48363E+01 |
| 0.06 | 0.00 | 0.51 | 7.9 | 0.126E+02 | 0.09 | 0.09 | 0.142 | .48760E+01 |
| 0.06 | 0.00 | 0.50 | 8.0 | 0.125E+02 | 0.09 | 0.09 | 0.142 | .49092E+01 |
| 0.06 | 0.00 | 0.50 | 8.1 | 0.123E+02 | 0.09 | 0.09 | 0.142 | .49491E+01 |
| 0.06 | 0.00 | 0.49 | 8.2 | 0.122E+02 | 0.09 | 0.09 | 0.142 | .49824E+01 |
| 0.06 | 0.00 | 0.49 | 8.3 | 0.121E+02 | 0.09 | 0.09 | 0.142 | .50225E+01 |
| 0.06 | 0.00 | 0.48 | 8.4 | 0.119E+02 | 0.09 | 0.09 | 0.142 | .50560E+01 |
| 0.07 | 0.00 | 0.47 | 8.5 | 0.118E+02 | 0.09 | 0.09 | 0.142 | .50962E+01 |
| 0.07 | 0.00 | 0.47 | 8.5 | 0.117E+02 | 0.09 | 0.09 | 0.142 | .51299E+01 |
| 0.07 | 0.00 | 0.46 | 8.6 | 0.116E+02 | 0.09 | 0.09 | 0.142 | .51703E+01 |
| 0.07 | 0.00 | 0.46 | 8.7 | 0.115E+02 | 0.09 | 0.09 | 0.142 | .52040E+01 |
| 0.07 | 0.00 | 0.45 | 8.8 | 0.113E+02 | 0.09 | 0.09 | 0.142 | .52446E+01 |
| 0.07 | 0.00 | 0.45 | 8.9 | 0.112E+02 | 0.09 | 0.09 | 0.142 | .52785E+01 |
| 0.07 | 0.00 | 0.44 | 9.0 | 0.111E+02 | 0.09 | 0.09 | 0.142 | .53192E+01 |
| 0.07 | 0.00 | 0.44 | 9.1 | 0.110E+02 | 0.09 | 0.09 | 0.142 | .53533E+01 |
| 0.07 | 0.00 | 0.43 | 9.2 | 0.109E+02 | 0.09 | 0.09 | 0.142 | .53942E+01 |
| 0.07 | 0.00 | 0.43 | 9.3 | 0.108E+02 | 0.09 | 0.09 | 0.142 | .54283E+01 |
| 0.07 | 0.00 | 0.42 | 9.4 | 0.107E+02 | 0.09 | 0.09 | 0.142 | .54694E+01 |
| 0.07 | 0.00 | 0.42 | 9.5 | 0.106E+02 | 0.09 | 0.09 | 0.142 | .55037E+01 |
| 0.07 | 0.00 | 0.41 | 9.6 | 0.105E+02 | 0.10 | 0.10 | 0.142 | .55450E+01 |
| 0.07 | 0.00 | 0.40 | 9.6 | 0.104E+02 | 0.10 | 0.10 | 0.142 | .55794E+01 |
| 0.07 | 0.00 | 0.40 | 9.7 | 0.103E+02 | 0.10 | 0.10 | 0.142 | .56208E+01 |
| 0.07 | 0.00 | 0.39 | 9.8 | 0.102E+02 | 0.10 | 0.10 | 0.142 | .56553E+01 |
| 0.08 | 0.00 | 0.39 | 9.9 | 0.101E+02 | 0.10 | 0.10 | 0.142 | .56969E+01 |
| 0.08 | 0.00 | 0.38 | 10.0 | 0.999E+01 | 0.10 | 0.10 | 0.142 | .57316E+01 |
| 0.08 | 0.00 | 0.38 | 10.1 | 0.989E+01 | 0.10 | 0.10 | 0.142 | .57733E+01 |
| 0.08 | 0.00 | 0.37 | 10.2 | 0.980E+01 | 0.10 | 0.10 | 0.142 | .58082E+01 |
| 0.08 | 0.00 | 0.37 | 10.3 | 0.971E+01 | 0.10 | 0.10 | 0.142 | .58500E+01 |
| 0.08 | 0.00 | 0.36 | 10.4 | 0.961E+01 | 0.10 | 0.10 | 0.142 | .58920E+01 |
| 0.08 | 0.00 | 0.35 | 10.5 | 0.953E+01 | 0.10 | 0.10 | 0.142 | .59270E+01 |
| 0.08 | 0.00 | 0.35 | 10.6 | 0.943E+01 | 0.10 | 0.10 | 0.141 | .59691E+01 |
| 0.08 | 0.00 | 0.34 | 10.7 | 0.936E+01 | 0.10 | 0.10 | 0.141 | .60043E+01 |
| 0.08 | 0.00 | 0.34 | 10.8 | 0.926E+01 | 0.10 | 0.10 | 0.141 | .60466E+01 |
| 0.08 | 0.00 | 0.33 | 10.9 | 0.919E+01 | 0.10 | 0.10 | 0.141 | .60819E+01 |
| 0.08 | 0.00 | 0.33 | 11.0 | 0.910E+01 | 0.10 | 0.10 | 0.140 | .61243E+01 |
| 0.08 | 0.00 | 0.32 | 11.1 | 0.903E+01 | 0.10 | 0.10 | 0.140 | .61597E+01 |
| 0.08 | 0.00 | 0.32 | 11.2 | 0.894E+01 | 0.10 | 0.10 | 0.140 | .62023E+01 |
| 0.08 | 0.00 | 0.31 | 11.3 | 0.887E+01 | 0.11 | 0.11 | 0.140 | .62378E+01 |
| 0.08 | 0.00 | 0.30 | 11.4 | 0.878E+01 | 0.11 | 0.11 | 0.139 | .62806E+01 |
| 0.09 | 0.00 | 0.30 | 11.5 | 0.872E+01 | 0.11 | 0.11 | 0.139 | .63162E+01 |
| 0.09 | 0.00 | 0.29 | 11.6 | 0.863E+01 | 0.11 | 0.11 | 0.139 | .63591E+01 |
| 0.09 | 0.00 | 0.29 | 11.7 | 0.857E+01 | 0.11 | 0.11 | 0.139 | .63949E+01 |
| 0.09 | 0.00 | 0.28 | 11.8 | 0.849E+01 | 0.11 | 0.11 | 0.138 | .64379E+01 |
| 0.09 | 0.00 | 0.28 | 11.9 | 0.842E+01 | 0.11 | 0.11 | 0.138 | .64739E+01 |
| 0.09 | 0.00 | 0.27 | 12.0 | 0.834E+01 | 0.11 | 0.11 | 0.138 | .65170E+01 |
| 0.09 | 0.00 | 0.27 | 12.1 | 0.828E+01 | 0.11 | 0.11 | 0.138 | .65531E+01 |
| 0.09 | 0.00 | 0.26 | 12.2 | 0.820E+01 | 0.11 | 0.11 | 0.137 | .65964E+01 |
| 0.09 | 0.00 | 0.26 | 12.3 | 0.814E+01 | 0.11 | 0.11 | 0.137 | .66326E+01 |

```
     0.09     0.00     0.25     12.4 0.807E+01   0.11     0.11     0.137   .66761E+01
     0.09     0.00     0.25     12.5 0.801E+01   0.11     0.11     0.137   .67124E+01
     0.09     0.00     0.24     12.6 0.794E+01   0.11     0.11     0.137   .67560E+01
     0.09     0.00     0.23     12.7 0.788E+01   0.11     0.11     0.136   .67924E+01
     0.09     0.00     0.23     12.8 0.781E+01   0.11     0.11     0.136   .68362E+01
     0.09     0.00     0.22     12.9 0.775E+01   0.11     0.11     0.136   .68727E+01
     0.10     0.00     0.22     13.0 0.768E+01   0.11     0.11     0.136   .69166E+01
     0.10     0.00     0.21     13.1 0.763E+01   0.12     0.12     0.135   .69533E+01
     0.10     0.00     0.21     13.2 0.756E+01   0.12     0.12     0.135   .69973E+01
     0.10     0.00     0.20     13.3 0.750E+01   0.12     0.12     0.135   .70341E+01
     0.10     0.00     0.20     13.4 0.744E+01   0.12     0.12     0.135   .70783E+01
     0.10     0.00     0.19     13.5 0.739E+01   0.12     0.12     0.135   .71152E+01
     0.10     0.00     0.18     13.7 0.732E+01   0.12     0.12     0.134   .71595E+01
     0.10     0.00     0.18     13.8 0.726E+01   0.12     0.12     0.134   .72040E+01
     0.10     0.00     0.17     13.9 0.721E+01   0.12     0.12     0.134   .72410E+01
     0.10     0.00     0.17     14.0 0.715E+01   0.12     0.12     0.134   .72856E+01
     0.10     0.00     0.16     14.1 0.710E+01   0.12     0.12     0.133   .73228E+01
     0.10     0.00     0.16     14.2 0.704E+01   0.12     0.12     0.133   .73675E+01
     0.10     0.00     0.15     14.3 0.699E+01   0.12     0.12     0.133   .74048E+01
     0.10     0.00     0.15     14.4 0.693E+01   0.12     0.12     0.133   .74497E+01
     0.10     0.00     0.14     14.5 0.689E+01   0.12     0.12     0.133   .74871E+01
     0.11     0.00     0.14     14.6 0.683E+01   0.12     0.12     0.132   .75321E+01
     0.11     0.00     0.13     14.7 0.678E+01   0.12     0.12     0.132   .75696E+01
     0.11     0.00     0.12     14.8 0.674E+01   0.12     0.12     0.132   .76086E+01
 Cumulative travel time =          7.6086 sec  (    0.00 hrs)
  Merging of individual jet/plumes not found in this module, but interaction
    will occur in following module.  Overall jet/plume interaction dimensions:
     0.11     0.00     0.12     14.8 0.674E+01   0.12    32.96     0.132   .76086E+01

END OF CORJET (MOD110): JET/PLUME NEAR-FIELD MIXING REGION
-----------------------------------------------------------------------------------------------
-----------------------------------------------------------------------------------------------
BEGIN MOD235: LAYER/BOUNDARY/TERMINAL LAYER APPROACH

  Control volume inflow:
       X        Y        Z        S        C        BV       BH        TT
     0.11     0.00     0.12     14.8 0.674E+01   0.12    32.96   .76086E+01

 Profile definitions:
   BV = top-hat thickness, measured vertically
   BH = top-hat half-width, measured horizontally in y-direction
   ZU = upper plume boundary (Z-coordinate)
   ZL = lower plume boundary (Z-coordinate)
   S  = hydrodynamic average (bulk) dilution
   C  = average (bulk) concentration (includes reaction effects, if any)
   TT = Cumulative travel time

       X        Y        Z        S        C        BV       BH       ZU       ZL        TT
    -0.00     0.00     0.00     14.8 0.674E+01   0.00     0.00     0.00     0.00   .76086E+01
     0.07     0.00     0.00     14.8 0.674E+01   0.11    22.70     0.11     0.00   .76086E+01
     0.14     0.00     0.00     15.0 0.667E+01   0.12    29.94     0.12     0.00   .10197E+02
     0.21     0.00     0.00     17.6 0.568E+01   0.13    29.96     0.13     0.00   .20184E+02
     0.28     0.00     0.00     20.1 0.498E+01   0.14    29.98     0.14     0.00   .30170E+02
     0.36     0.00     0.00     21.0 0.476E+01   0.14    30.00     0.14     0.00   .40156E+02
 Cumulative travel time =         40.1562 sec  (    0.01 hrs)

END OF MOD235: LAYER/BOUNDARY/TERMINAL LAYER APPROACH
-----------------------------------------------------------------------------------------------
** End of NEAR-FIELD REGION (NFR) **
-----------------------------------------------------------------------------------------------
BEGIN MOD241: BUOYANT AMBIENT SPREADING

 Profile definitions:
   BV = top-hat thickness, measured vertically
   BH = top-hat half-width, measured horizontally in y-direction
   ZU = upper plume boundary (Z-coordinate)
   ZL = lower plume boundary (Z-coordinate)
   S  = hydrodynamic average (bulk) dilution
   C  = average (bulk) concentration (includes reaction effects, if any)
   TT = Cumulative travel time
```

Plume Stage 1 (not bank attached):

| X | Y | Z | S | C | BV | BH | ZU | ZL | TT |
|---|---|---|---|---|---|---|---|---|---|
| 0.36 | 0.00 | 0.00 | 21.0 | 0.476E+01 | 0.14 | 30.00 | 0.14 | 0.00 | .40156E+02 |
| 0.86 | 0.00 | 0.00 | 21.1 | 0.474E+01 | 0.14 | 30.42 | 0.14 | 0.00 | .10604E+03 |
| 1.36 | 0.00 | 0.00 | 21.2 | 0.471E+01 | 0.14 | 30.84 | 0.14 | 0.00 | .17193E+03 |
| 1.86 | 0.00 | 0.00 | 21.3 | 0.469E+01 | 0.14 | 31.26 | 0.14 | 0.00 | .23781E+03 |
| 2.37 | 0.00 | 0.00 | 21.4 | 0.466E+01 | 0.14 | 31.67 | 0.14 | 0.00 | .30370E+03 |
| 2.87 | 0.00 | 0.00 | 21.5 | 0.464E+01 | 0.14 | 32.07 | 0.14 | 0.00 | .36958E+03 |
| 3.37 | 0.00 | 0.00 | 21.7 | 0.462E+01 | 0.14 | 32.46 | 0.14 | 0.00 | .43547E+03 |
| 3.87 | 0.00 | 0.00 | 21.8 | 0.460E+01 | 0.13 | 32.85 | 0.13 | 0.00 | .50136E+03 |
| 4.38 | 0.00 | 0.00 | 21.9 | 0.457E+01 | 0.13 | 33.24 | 0.13 | 0.00 | .56724E+03 |
| 4.88 | 0.00 | 0.00 | 22.0 | 0.455E+01 | 0.13 | 33.62 | 0.13 | 0.00 | .63313E+03 |
| 5.38 | 0.00 | 0.00 | 22.1 | 0.453E+01 | 0.13 | 33.99 | 0.13 | 0.00 | .69901E+03 |
| 5.88 | 0.00 | 0.00 | 22.2 | 0.451E+01 | 0.13 | 34.36 | 0.13 | 0.00 | .76490E+03 |
| 6.39 | 0.00 | 0.00 | 22.3 | 0.449E+01 | 0.13 | 34.73 | 0.13 | 0.00 | .83078E+03 |
| 6.89 | 0.00 | 0.00 | 22.4 | 0.446E+01 | 0.13 | 35.09 | 0.13 | 0.00 | .89667E+03 |
| 7.39 | 0.00 | 0.00 | 22.5 | 0.444E+01 | 0.13 | 35.44 | 0.13 | 0.00 | .96255E+03 |
| 7.90 | 0.00 | 0.00 | 22.6 | 0.442E+01 | 0.13 | 35.79 | 0.13 | 0.00 | .10284E+04 |
| 8.40 | 0.00 | 0.00 | 22.7 | 0.440E+01 | 0.13 | 36.14 | 0.13 | 0.00 | .10943E+04 |
| 8.90 | 0.00 | 0.00 | 22.8 | 0.438E+01 | 0.13 | 36.48 | 0.13 | 0.00 | .11602E+04 |
| 9.40 | 0.00 | 0.00 | 22.9 | 0.436E+01 | 0.13 | 36.82 | 0.13 | 0.00 | .12261E+04 |
| 9.91 | 0.00 | 0.00 | 23.0 | 0.434E+01 | 0.13 | 37.16 | 0.13 | 0.00 | .12920E+04 |
| 10.41 | 0.00 | 0.00 | 23.2 | 0.432E+01 | 0.13 | 37.49 | 0.13 | 0.00 | .13579E+04 |
| 10.91 | 0.00 | 0.00 | 23.3 | 0.430E+01 | 0.12 | 37.82 | 0.12 | 0.00 | .14238E+04 |
| 11.41 | 0.00 | 0.00 | 23.4 | 0.428E+01 | 0.12 | 38.15 | 0.12 | 0.00 | .14896E+04 |
| 11.92 | 0.00 | 0.00 | 23.5 | 0.426E+01 | 0.12 | 38.47 | 0.12 | 0.00 | .15555E+04 |
| 12.42 | 0.00 | 0.00 | 23.6 | 0.424E+01 | 0.12 | 38.79 | 0.12 | 0.00 | .16214E+04 |
| 12.92 | 0.00 | 0.00 | 23.7 | 0.422E+01 | 0.12 | 39.11 | 0.12 | 0.00 | .16873E+04 |
| 13.43 | 0.00 | 0.00 | 23.8 | 0.420E+01 | 0.12 | 39.42 | 0.12 | 0.00 | .17532E+04 |
| 13.93 | 0.00 | 0.00 | 23.9 | 0.418E+01 | 0.12 | 39.73 | 0.12 | 0.00 | .18191E+04 |
| 14.43 | 0.00 | 0.00 | 24.0 | 0.416E+01 | 0.12 | 40.04 | 0.12 | 0.00 | .18850E+04 |
| 14.93 | 0.00 | 0.00 | 24.1 | 0.414E+01 | 0.12 | 40.34 | 0.12 | 0.00 | .19508E+04 |
| 15.44 | 0.00 | 0.00 | 24.2 | 0.412E+01 | 0.12 | 40.65 | 0.12 | 0.00 | .20167E+04 |
| 15.94 | 0.00 | 0.00 | 24.4 | 0.411E+01 | 0.12 | 40.95 | 0.12 | 0.00 | .20826E+04 |
| 16.44 | 0.00 | 0.00 | 24.5 | 0.409E+01 | 0.12 | 41.25 | 0.12 | 0.00 | .21485E+04 |
| 16.94 | 0.00 | 0.00 | 24.6 | 0.407E+01 | 0.12 | 41.54 | 0.12 | 0.00 | .22144E+04 |
| 17.45 | 0.00 | 0.00 | 24.7 | 0.405E+01 | 0.12 | 41.83 | 0.12 | 0.00 | .22803E+04 |
| 17.95 | 0.00 | 0.00 | 24.8 | 0.403E+01 | 0.12 | 42.13 | 0.12 | 0.00 | .23462E+04 |
| 18.45 | 0.00 | 0.00 | 24.9 | 0.401E+01 | 0.12 | 42.41 | 0.12 | 0.00 | .24120E+04 |
| 18.96 | 0.00 | 0.00 | 25.0 | 0.399E+01 | 0.12 | 42.70 | 0.12 | 0.00 | .24779E+04 |
| 19.46 | 0.00 | 0.00 | 25.2 | 0.398E+01 | 0.12 | 42.98 | 0.12 | 0.00 | .25438E+04 |
| 19.96 | 0.00 | 0.00 | 25.3 | 0.396E+01 | 0.12 | 43.27 | 0.12 | 0.00 | .26097E+04 |
| 20.46 | 0.00 | 0.00 | 25.4 | 0.394E+01 | 0.12 | 43.55 | 0.12 | 0.00 | .26756E+04 |
| 20.97 | 0.00 | 0.00 | 25.5 | 0.392E+01 | 0.12 | 43.83 | 0.12 | 0.00 | .27415E+04 |
| 21.47 | 0.00 | 0.00 | 25.6 | 0.390E+01 | 0.12 | 44.10 | 0.12 | 0.00 | .28074E+04 |
| 21.97 | 0.00 | 0.00 | 25.7 | 0.389E+01 | 0.12 | 44.38 | 0.12 | 0.00 | .28732E+04 |
| 22.47 | 0.00 | 0.00 | 25.9 | 0.387E+01 | 0.12 | 44.65 | 0.12 | 0.00 | .29391E+04 |
| 22.98 | 0.00 | 0.00 | 26.0 | 0.385E+01 | 0.12 | 44.92 | 0.12 | 0.00 | .30050E+04 |
| 23.48 | 0.00 | 0.00 | 26.1 | 0.383E+01 | 0.12 | 45.19 | 0.12 | 0.00 | .30709E+04 |
| 23.98 | 0.00 | 0.00 | 26.2 | 0.381E+01 | 0.12 | 45.46 | 0.12 | 0.00 | .31368E+04 |
| 24.49 | 0.00 | 0.00 | 26.3 | 0.380E+01 | 0.12 | 45.72 | 0.12 | 0.00 | .32027E+04 |
| 24.99 | 0.00 | 0.00 | 26.5 | 0.378E+01 | 0.12 | 45.99 | 0.12 | 0.00 | .32685E+04 |
| 25.49 | 0.00 | 0.00 | 26.6 | 0.376E+01 | 0.12 | 46.25 | 0.12 | 0.00 | .33344E+04 |
| 25.99 | 0.00 | 0.00 | 26.7 | 0.374E+01 | 0.12 | 46.51 | 0.12 | 0.00 | .34003E+04 |
| 26.50 | 0.00 | 0.00 | 26.8 | 0.373E+01 | 0.12 | 46.77 | 0.12 | 0.00 | .34662E+04 |
| 27.00 | 0.00 | 0.00 | 27.0 | 0.371E+01 | 0.12 | 47.03 | 0.12 | 0.00 | .35321E+04 |
| 27.50 | 0.00 | 0.00 | 27.1 | 0.369E+01 | 0.12 | 47.29 | 0.12 | 0.00 | .35980E+04 |
| 28.00 | 0.00 | 0.00 | 27.2 | 0.367E+01 | 0.12 | 47.54 | 0.12 | 0.00 | .36639E+04 |
| 28.51 | 0.00 | 0.00 | 27.3 | 0.366E+01 | 0.12 | 47.79 | 0.12 | 0.00 | .37297E+04 |
| 29.01 | 0.00 | 0.00 | 27.5 | 0.364E+01 | 0.12 | 48.05 | 0.12 | 0.00 | .37956E+04 |
| 29.51 | 0.00 | 0.00 | 27.6 | 0.362E+01 | 0.12 | 48.30 | 0.12 | 0.00 | .38615E+04 |
| 30.01 | 0.00 | 0.00 | 27.7 | 0.361E+01 | 0.12 | 48.55 | 0.12 | 0.00 | .39274E+04 |
| 30.52 | 0.00 | 0.00 | 27.9 | 0.359E+01 | 0.12 | 48.80 | 0.12 | 0.00 | .39933E+04 |
| 31.02 | 0.00 | 0.00 | 28.0 | 0.357E+01 | 0.12 | 49.04 | 0.12 | 0.00 | .40592E+04 |
| 31.52 | 0.00 | 0.00 | 28.1 | 0.356E+01 | 0.12 | 49.29 | 0.12 | 0.00 | .41251E+04 |
| 32.03 | 0.00 | 0.00 | 28.3 | 0.354E+01 | 0.12 | 49.53 | 0.12 | 0.00 | .41909E+04 |
| 32.53 | 0.00 | 0.00 | 28.4 | 0.352E+01 | 0.12 | 49.78 | 0.12 | 0.00 | .42568E+04 |
| 33.03 | 0.00 | 0.00 | 28.5 | 0.351E+01 | 0.12 | 50.02 | 0.12 | 0.00 | .43227E+04 |
| 33.53 | 0.00 | 0.00 | 28.7 | 0.349E+01 | 0.12 | 50.26 | 0.12 | 0.00 | .43886E+04 |

| | | | | | | | | | |
|---|---|---|---|---|---|---|---|---|---|
| 34.04 | 0.00 | 0.00 | 28.8 | 0.347E+01 | 0.12 | 50.50 | 0.12 | 0.00 | .44545E+04 |
| 34.54 | 0.00 | 0.00 | 28.9 | 0.346E+01 | 0.12 | 50.74 | 0.12 | 0.00 | .45204E+04 |
| 35.04 | 0.00 | 0.00 | 29.1 | 0.344E+01 | 0.12 | 50.98 | 0.12 | 0.00 | .45863E+04 |
| 35.54 | 0.00 | 0.00 | 29.2 | 0.342E+01 | 0.12 | 51.22 | 0.12 | 0.00 | .46521E+04 |
| 36.05 | 0.00 | 0.00 | 29.3 | 0.341E+01 | 0.12 | 51.45 | 0.12 | 0.00 | .47180E+04 |
| 36.55 | 0.00 | 0.00 | 29.5 | 0.339E+01 | 0.12 | 51.69 | 0.12 | 0.00 | .47839E+04 |
| 37.05 | 0.00 | 0.00 | 29.6 | 0.338E+01 | 0.12 | 51.92 | 0.12 | 0.00 | .48498E+04 |
| 37.56 | 0.00 | 0.00 | 29.8 | 0.336E+01 | 0.12 | 52.15 | 0.12 | 0.00 | .49157E+04 |
| 38.06 | 0.00 | 0.00 | 29.9 | 0.334E+01 | 0.12 | 52.39 | 0.12 | 0.00 | .49816E+04 |
| 38.56 | 0.00 | 0.00 | 30.1 | 0.333E+01 | 0.12 | 52.62 | 0.12 | 0.00 | .50475E+04 |
| 39.06 | 0.00 | 0.00 | 30.2 | 0.331E+01 | 0.12 | 52.85 | 0.12 | 0.00 | .51133E+04 |
| 39.57 | 0.00 | 0.00 | 30.3 | 0.330E+01 | 0.12 | 53.08 | 0.12 | 0.00 | .51792E+04 |
| 40.07 | 0.00 | 0.00 | 30.5 | 0.328E+01 | 0.12 | 53.30 | 0.12 | 0.00 | .52451E+04 |
| 40.57 | 0.00 | 0.00 | 30.6 | 0.326E+01 | 0.12 | 53.53 | 0.12 | 0.00 | .53110E+04 |
| 41.07 | 0.00 | 0.00 | 30.8 | 0.325E+01 | 0.12 | 53.76 | 0.12 | 0.00 | .53769E+04 |
| 41.58 | 0.00 | 0.00 | 30.9 | 0.323E+01 | 0.12 | 53.98 | 0.12 | 0.00 | .54428E+04 |
| 42.08 | 0.00 | 0.00 | 31.1 | 0.322E+01 | 0.12 | 54.21 | 0.12 | 0.00 | .55087E+04 |
| 42.58 | 0.00 | 0.00 | 31.2 | 0.320E+01 | 0.12 | 54.43 | 0.12 | 0.00 | .55745E+04 |
| 43.09 | 0.00 | 0.00 | 31.4 | 0.319E+01 | 0.12 | 54.66 | 0.12 | 0.00 | .56404E+04 |
| 43.59 | 0.00 | 0.00 | 31.5 | 0.317E+01 | 0.12 | 54.88 | 0.12 | 0.00 | .57063E+04 |
| 44.09 | 0.00 | 0.00 | 31.7 | 0.316E+01 | 0.12 | 55.10 | 0.12 | 0.00 | .57722E+04 |
| 44.59 | 0.00 | 0.00 | 31.8 | 0.314E+01 | 0.12 | 55.32 | 0.12 | 0.00 | .58381E+04 |
| 45.10 | 0.00 | 0.00 | 32.0 | 0.312E+01 | 0.12 | 55.54 | 0.12 | 0.00 | .59040E+04 |
| 45.60 | 0.00 | 0.00 | 32.2 | 0.311E+01 | 0.12 | 55.76 | 0.12 | 0.00 | .59699E+04 |
| 46.10 | 0.00 | 0.00 | 32.3 | 0.309E+01 | 0.12 | 55.98 | 0.12 | 0.00 | .60357E+04 |
| 46.60 | 0.00 | 0.00 | 32.5 | 0.308E+01 | 0.12 | 56.20 | 0.12 | 0.00 | .61016E+04 |
| 47.11 | 0.00 | 0.00 | 32.6 | 0.306E+01 | 0.12 | 56.41 | 0.12 | 0.00 | .61675E+04 |
| 47.61 | 0.00 | 0.00 | 32.8 | 0.305E+01 | 0.12 | 56.63 | 0.12 | 0.00 | .62334E+04 |
| 48.11 | 0.00 | 0.00 | 33.0 | 0.303E+01 | 0.12 | 56.85 | 0.12 | 0.00 | .62993E+04 |
| 48.62 | 0.00 | 0.00 | 33.1 | 0.302E+01 | 0.12 | 57.06 | 0.12 | 0.00 | .63652E+04 |
| 49.12 | 0.00 | 0.00 | 33.3 | 0.301E+01 | 0.12 | 57.28 | 0.12 | 0.00 | .64311E+04 |
| 49.62 | 0.00 | 0.00 | 33.4 | 0.299E+01 | 0.12 | 57.49 | 0.12 | 0.00 | .64969E+04 |
| 50.12 | 0.00 | 0.00 | 33.6 | 0.298E+01 | 0.12 | 57.70 | 0.12 | 0.00 | .65628E+04 |
| 50.63 | 0.00 | 0.00 | 33.8 | 0.296E+01 | 0.12 | 57.91 | 0.12 | 0.00 | .66287E+04 |
| 51.13 | 0.00 | 0.00 | 33.9 | 0.295E+01 | 0.12 | 58.13 | 0.12 | 0.00 | .66946E+04 |
| 51.63 | 0.00 | 0.00 | 34.1 | 0.293E+01 | 0.12 | 58.34 | 0.12 | 0.00 | .67605E+04 |
| 52.13 | 0.00 | 0.00 | 34.3 | 0.292E+01 | 0.12 | 58.55 | 0.12 | 0.00 | .68264E+04 |
| 52.64 | 0.00 | 0.00 | 34.4 | 0.290E+01 | 0.12 | 58.76 | 0.12 | 0.00 | .68923E+04 |
| 53.14 | 0.00 | 0.00 | 34.6 | 0.289E+01 | 0.12 | 58.97 | 0.12 | 0.00 | .69581E+04 |
| 53.64 | 0.00 | 0.00 | 34.8 | 0.288E+01 | 0.12 | 59.18 | 0.12 | 0.00 | .70240E+04 |
| 54.14 | 0.00 | 0.00 | 34.9 | 0.286E+01 | 0.12 | 59.38 | 0.12 | 0.00 | .70899E+04 |
| 54.65 | 0.00 | 0.00 | 35.1 | 0.285E+01 | 0.12 | 59.59 | 0.12 | 0.00 | .71558E+04 |
| 55.15 | 0.00 | 0.00 | 35.3 | 0.283E+01 | 0.12 | 59.80 | 0.12 | 0.00 | .72217E+04 |
| 55.65 | 0.00 | 0.00 | 35.5 | 0.282E+01 | 0.12 | 60.01 | 0.12 | 0.00 | .72876E+04 |
| 56.16 | 0.00 | 0.00 | 35.6 | 0.281E+01 | 0.12 | 60.21 | 0.12 | 0.00 | .73535E+04 |
| 56.66 | 0.00 | 0.00 | 35.8 | 0.279E+01 | 0.12 | 60.42 | 0.12 | 0.00 | .74193E+04 |
| 57.16 | 0.00 | 0.00 | 36.0 | 0.278E+01 | 0.12 | 60.62 | 0.12 | 0.00 | .74852E+04 |
| 57.66 | 0.00 | 0.00 | 36.2 | 0.276E+01 | 0.12 | 60.83 | 0.12 | 0.00 | .75511E+04 |
| 58.17 | 0.00 | 0.00 | 36.4 | 0.275E+01 | 0.12 | 61.03 | 0.12 | 0.00 | .76170E+04 |
| 58.67 | 0.00 | 0.00 | 36.5 | 0.274E+01 | 0.12 | 61.23 | 0.12 | 0.00 | .76829E+04 |
| 59.17 | 0.00 | 0.00 | 36.7 | 0.272E+01 | 0.12 | 61.44 | 0.12 | 0.00 | .77488E+04 |
| 59.67 | 0.00 | 0.00 | 36.9 | 0.271E+01 | 0.12 | 61.64 | 0.12 | 0.00 | .78147E+04 |
| 60.18 | 0.00 | 0.00 | 37.1 | 0.270E+01 | 0.12 | 61.84 | 0.12 | 0.00 | .78805E+04 |
| 60.68 | 0.00 | 0.00 | 37.3 | 0.268E+01 | 0.12 | 62.04 | 0.12 | 0.00 | .79464E+04 |
| 61.18 | 0.00 | 0.00 | 37.5 | 0.267E+01 | 0.12 | 62.24 | 0.12 | 0.00 | .80123E+04 |
| 61.69 | 0.00 | 0.00 | 37.6 | 0.266E+01 | 0.12 | 62.44 | 0.12 | 0.00 | .80782E+04 |
| 62.19 | 0.00 | 0.00 | 37.8 | 0.264E+01 | 0.12 | 62.64 | 0.12 | 0.00 | .81441E+04 |
| 62.69 | 0.00 | 0.00 | 38.0 | 0.263E+01 | 0.12 | 62.84 | 0.12 | 0.00 | .82100E+04 |
| 63.19 | 0.00 | 0.00 | 38.2 | 0.262E+01 | 0.12 | 63.04 | 0.12 | 0.00 | .82759E+04 |
| 63.70 | 0.00 | 0.00 | 38.4 | 0.260E+01 | 0.12 | 63.24 | 0.12 | 0.00 | .83417E+04 |
| 64.20 | 0.00 | 0.00 | 38.6 | 0.259E+01 | 0.12 | 63.44 | 0.12 | 0.00 | .84076E+04 |
| 64.70 | 0.00 | 0.00 | 38.8 | 0.258E+01 | 0.12 | 63.64 | 0.12 | 0.00 | .84735E+04 |
| 65.20 | 0.00 | 0.00 | 39.0 | 0.257E+01 | 0.12 | 63.83 | 0.12 | 0.00 | .85394E+04 |
| 65.71 | 0.00 | 0.00 | 39.2 | 0.255E+01 | 0.12 | 64.03 | 0.12 | 0.00 | .86053E+04 |
| 66.21 | 0.00 | 0.00 | 39.4 | 0.254E+01 | 0.12 | 64.23 | 0.12 | 0.00 | .86712E+04 |
| 66.71 | 0.00 | 0.00 | 39.6 | 0.253E+01 | 0.12 | 64.42 | 0.12 | 0.00 | .87371E+04 |
| 67.22 | 0.00 | 0.00 | 39.8 | 0.252E+01 | 0.13 | 64.62 | 0.13 | 0.00 | .88029E+04 |
| 67.72 | 0.00 | 0.00 | 40.0 | 0.250E+01 | 0.13 | 64.82 | 0.13 | 0.00 | .88688E+04 |
| 68.22 | 0.00 | 0.00 | 40.2 | 0.249E+01 | 0.13 | 65.01 | 0.13 | 0.00 | .89347E+04 |
| 68.72 | 0.00 | 0.00 | 40.4 | 0.248E+01 | 0.13 | 65.21 | 0.13 | 0.00 | .90006E+04 |

| | | | | | | | | | |
|---|---|---|---|---|---|---|---|---|---|
| 69.23 | 0.00 | 0.00 | 40.6 | 0.247E+01 | 0.13 | 65.40 | 0.13 | 0.00 | .90665E+04 |
| 69.73 | 0.00 | 0.00 | 40.8 | 0.245E+01 | 0.13 | 65.59 | 0.13 | 0.00 | .91324E+04 |
| 70.23 | 0.00 | 0.00 | 41.0 | 0.244E+01 | 0.13 | 65.79 | 0.13 | 0.00 | .91983E+04 |
| 70.73 | 0.00 | 0.00 | 41.2 | 0.243E+01 | 0.13 | 65.98 | 0.13 | 0.00 | .92641E+04 |
| 71.24 | 0.00 | 0.00 | 41.4 | 0.242E+01 | 0.13 | 66.17 | 0.13 | 0.00 | .93300E+04 |
| 71.74 | 0.00 | 0.00 | 41.6 | 0.241E+01 | 0.13 | 66.36 | 0.13 | 0.00 | .93959E+04 |
| 72.24 | 0.00 | 0.00 | 41.8 | 0.239E+01 | 0.13 | 66.56 | 0.13 | 0.00 | .94618E+04 |
| 72.75 | 0.00 | 0.00 | 42.0 | 0.238E+01 | 0.13 | 66.75 | 0.13 | 0.00 | .95277E+04 |
| 73.25 | 0.00 | 0.00 | 42.2 | 0.237E+01 | 0.13 | 66.94 | 0.13 | 0.00 | .95936E+04 |
| 73.75 | 0.00 | 0.00 | 42.4 | 0.236E+01 | 0.13 | 67.13 | 0.13 | 0.00 | .96595E+04 |
| 74.25 | 0.00 | 0.00 | 42.6 | 0.235E+01 | 0.13 | 67.32 | 0.13 | 0.00 | .97253E+04 |
| 74.76 | 0.00 | 0.00 | 42.8 | 0.233E+01 | 0.13 | 67.51 | 0.13 | 0.00 | .97912E+04 |
| 75.26 | 0.00 | 0.00 | 43.1 | 0.232E+01 | 0.13 | 67.70 | 0.13 | 0.00 | .98571E+04 |
| 75.76 | 0.00 | 0.00 | 43.3 | 0.231E+01 | 0.13 | 67.89 | 0.13 | 0.00 | .99230E+04 |
| 76.26 | 0.00 | 0.00 | 43.5 | 0.230E+01 | 0.13 | 68.08 | 0.13 | 0.00 | .99889E+04 |
| 76.77 | 0.00 | 0.00 | 43.7 | 0.229E+01 | 0.13 | 68.27 | 0.13 | 0.00 | .10055E+05 |
| 77.27 | 0.00 | 0.00 | 43.9 | 0.228E+01 | 0.13 | 68.46 | 0.13 | 0.00 | .10121E+05 |
| 77.77 | 0.00 | 0.00 | 44.1 | 0.227E+01 | 0.13 | 68.65 | 0.13 | 0.00 | .10187E+05 |
| 78.27 | 0.00 | 0.00 | 44.4 | 0.225E+01 | 0.13 | 68.84 | 0.13 | 0.00 | .10252E+05 |
| 78.78 | 0.00 | 0.00 | 44.6 | 0.224E+01 | 0.13 | 69.02 | 0.13 | 0.00 | .10318E+05 |
| 79.28 | 0.00 | 0.00 | 44.8 | 0.223E+01 | 0.13 | 69.21 | 0.13 | 0.00 | .10384E+05 |
| 79.78 | 0.00 | 0.00 | 45.0 | 0.222E+01 | 0.13 | 69.40 | 0.13 | 0.00 | .10450E+05 |
| 80.29 | 0.00 | 0.00 | 45.2 | 0.221E+01 | 0.13 | 69.59 | 0.13 | 0.00 | .10516E+05 |
| 80.79 | 0.00 | 0.00 | 45.5 | 0.220E+01 | 0.13 | 69.77 | 0.13 | 0.00 | .10582E+05 |
| 81.29 | 0.00 | 0.00 | 45.7 | 0.219E+01 | 0.13 | 69.96 | 0.13 | 0.00 | .10648E+05 |
| 81.79 | 0.00 | 0.00 | 45.9 | 0.218E+01 | 0.13 | 70.14 | 0.13 | 0.00 | .10714E+05 |
| 82.30 | 0.00 | 0.00 | 46.2 | 0.217E+01 | 0.13 | 70.33 | 0.13 | 0.00 | .10780E+05 |
| 82.80 | 0.00 | 0.00 | 46.4 | 0.216E+01 | 0.13 | 70.52 | 0.13 | 0.00 | .10845E+05 |
| 83.30 | 0.00 | 0.00 | 46.6 | 0.215E+01 | 0.13 | 70.70 | 0.13 | 0.00 | .10911E+05 |
| 83.80 | 0.00 | 0.00 | 46.8 | 0.213E+01 | 0.13 | 70.89 | 0.13 | 0.00 | .10977E+05 |
| 84.31 | 0.00 | 0.00 | 47.1 | 0.212E+01 | 0.13 | 71.07 | 0.13 | 0.00 | .11043E+05 |
| 84.81 | 0.00 | 0.00 | 47.3 | 0.211E+01 | 0.13 | 71.26 | 0.13 | 0.00 | .11109E+05 |
| 85.31 | 0.00 | 0.00 | 47.5 | 0.210E+01 | 0.14 | 71.44 | 0.14 | 0.00 | .11175E+05 |
| 85.82 | 0.00 | 0.00 | 47.8 | 0.209E+01 | 0.14 | 71.62 | 0.14 | 0.00 | .11241E+05 |
| 86.32 | 0.00 | 0.00 | 48.0 | 0.208E+01 | 0.14 | 71.81 | 0.14 | 0.00 | .11307E+05 |
| 86.82 | 0.00 | 0.00 | 48.3 | 0.207E+01 | 0.14 | 71.99 | 0.14 | 0.00 | .11372E+05 |
| 87.32 | 0.00 | 0.00 | 48.5 | 0.206E+01 | 0.14 | 72.17 | 0.14 | 0.00 | .11438E+05 |
| 87.83 | 0.00 | 0.00 | 48.7 | 0.205E+01 | 0.14 | 72.36 | 0.14 | 0.00 | .11504E+05 |
| 88.33 | 0.00 | 0.00 | 49.0 | 0.204E+01 | 0.14 | 72.54 | 0.14 | 0.00 | .11570E+05 |
| 88.83 | 0.00 | 0.00 | 49.2 | 0.203E+01 | 0.14 | 72.72 | 0.14 | 0.00 | .11636E+05 |
| 89.33 | 0.00 | 0.00 | 49.5 | 0.202E+01 | 0.14 | 72.90 | 0.14 | 0.00 | .11702E+05 |
| 89.84 | 0.00 | 0.00 | 49.7 | 0.201E+01 | 0.14 | 73.09 | 0.14 | 0.00 | .11768E+05 |
| 90.34 | 0.00 | 0.00 | 50.0 | 0.200E+01 | 0.14 | 73.27 | 0.14 | 0.00 | .11834E+05 |
| 90.84 | 0.00 | 0.00 | 50.2 | 0.199E+01 | 0.14 | 73.45 | 0.14 | 0.00 | .11900E+05 |
| 91.35 | 0.00 | 0.00 | 50.5 | 0.198E+01 | 0.14 | 73.63 | 0.14 | 0.00 | .11965E+05 |
| 91.85 | 0.00 | 0.00 | 50.7 | 0.197E+01 | 0.14 | 73.81 | 0.14 | 0.00 | .12031E+05 |
| 92.35 | 0.00 | 0.00 | 51.0 | 0.196E+01 | 0.14 | 73.99 | 0.14 | 0.00 | .12097E+05 |
| 92.85 | 0.00 | 0.00 | 51.2 | 0.195E+01 | 0.14 | 74.17 | 0.14 | 0.00 | .12163E+05 |
| 93.36 | 0.00 | 0.00 | 51.5 | 0.194E+01 | 0.14 | 74.35 | 0.14 | 0.00 | .12229E+05 |
| 93.86 | 0.00 | 0.00 | 51.7 | 0.193E+01 | 0.14 | 74.54 | 0.14 | 0.00 | .12295E+05 |
| 94.36 | 0.00 | 0.00 | 52.0 | 0.192E+01 | 0.14 | 74.72 | 0.14 | 0.00 | .12361E+05 |
| 94.86 | 0.00 | 0.00 | 52.2 | 0.191E+01 | 0.14 | 74.90 | 0.14 | 0.00 | .12427E+05 |
| 95.37 | 0.00 | 0.00 | 52.5 | 0.191E+01 | 0.14 | 75.07 | 0.14 | 0.00 | .12493E+05 |
| 95.87 | 0.00 | 0.00 | 52.7 | 0.190E+01 | 0.14 | 75.25 | 0.14 | 0.00 | .12558E+05 |
| 96.37 | 0.00 | 0.00 | 53.0 | 0.189E+01 | 0.14 | 75.43 | 0.14 | 0.00 | .12624E+05 |
| 96.88 | 0.00 | 0.00 | 53.3 | 0.188E+01 | 0.14 | 75.61 | 0.14 | 0.00 | .12690E+05 |
| 97.38 | 0.00 | 0.00 | 53.5 | 0.187E+01 | 0.14 | 75.79 | 0.14 | 0.00 | .12756E+05 |
| 97.88 | 0.00 | 0.00 | 53.8 | 0.186E+01 | 0.14 | 75.97 | 0.14 | 0.00 | .12822E+05 |
| 98.38 | 0.00 | 0.00 | 54.0 | 0.185E+01 | 0.14 | 76.15 | 0.14 | 0.00 | .12888E+05 |
| 98.89 | 0.00 | 0.00 | 54.3 | 0.184E+01 | 0.14 | 76.33 | 0.14 | 0.00 | .12954E+05 |
| 99.39 | 0.00 | 0.00 | 54.6 | 0.183E+01 | 0.14 | 76.50 | 0.14 | 0.00 | .13020E+05 |
| 99.89 | 0.00 | 0.00 | 54.8 | 0.182E+01 | 0.15 | 76.68 | 0.15 | 0.00 | .13086E+05 |
| 100.39 | 0.00 | 0.00 | 55.1 | 0.181E+01 | 0.15 | 76.86 | 0.15 | 0.00 | .13151E+05 |
| 100.90 | 0.00 | 0.00 | 55.4 | 0.181E+01 | 0.15 | 77.04 | 0.15 | 0.00 | .13217E+05 |

Cumulative travel time = 13217.2754 sec ( 3.67 hrs)

---

Plume is ATTACHED to LEFT bank/shore.
Plume width is now determined from LEFT bank/shore.

Plume Stage 2 (bank attached):

| X | Y | Z | S | C | BV | BH | ZU | ZL | TT |
|---|---|---|---|---|---|---|---|---|---|
| 100.90 | 77.03 | 0.00 | 55.4 | 0.181E+01 | 0.15 | 154.08 | 0.15 | 0.00 | .13217E+05 |
| 101.05 | 77.03 | 0.00 | 55.5 | 0.180E+01 | 0.15 | 154.11 | 0.15 | 0.00 | .13237E+05 |
| 101.20 | 77.03 | 0.00 | 55.5 | 0.180E+01 | 0.15 | 154.14 | 0.15 | 0.00 | .13257E+05 |
| 101.35 | 77.03 | 0.00 | 55.6 | 0.180E+01 | 0.15 | 154.17 | 0.15 | 0.00 | .13276E+05 |
| 101.50 | 77.03 | 0.00 | 55.7 | 0.180E+01 | 0.15 | 154.20 | 0.15 | 0.00 | .13296E+05 |
| 101.65 | 77.03 | 0.00 | 55.8 | 0.179E+01 | 0.15 | 154.23 | 0.15 | 0.00 | .13316E+05 |
| 101.80 | 77.03 | 0.00 | 55.8 | 0.179E+01 | 0.15 | 154.26 | 0.15 | 0.00 | .13335E+05 |
| 101.95 | 77.03 | 0.00 | 55.9 | 0.179E+01 | 0.15 | 154.30 | 0.15 | 0.00 | .13355E+05 |
| 102.10 | 77.03 | 0.00 | 56.0 | 0.179E+01 | 0.15 | 154.33 | 0.15 | 0.00 | .13375E+05 |
| 102.25 | 77.03 | 0.00 | 56.0 | 0.178E+01 | 0.15 | 154.36 | 0.15 | 0.00 | .13395E+05 |
| 102.40 | 77.03 | 0.00 | 56.1 | 0.178E+01 | 0.15 | 154.39 | 0.15 | 0.00 | .13414E+05 |
| 102.55 | 77.03 | 0.00 | 56.2 | 0.178E+01 | 0.15 | 154.42 | 0.15 | 0.00 | .13434E+05 |
| 102.70 | 77.03 | 0.00 | 56.3 | 0.178E+01 | 0.15 | 154.45 | 0.15 | 0.00 | .13454E+05 |
| 102.85 | 77.03 | 0.00 | 56.3 | 0.177E+01 | 0.15 | 154.48 | 0.15 | 0.00 | .13473E+05 |
| 103.00 | 77.03 | 0.00 | 56.4 | 0.177E+01 | 0.15 | 154.52 | 0.15 | 0.00 | .13493E+05 |
| 103.15 | 77.03 | 0.00 | 56.5 | 0.177E+01 | 0.15 | 154.55 | 0.15 | 0.00 | .13513E+05 |
| 103.30 | 77.03 | 0.00 | 56.6 | 0.177E+01 | 0.15 | 154.58 | 0.15 | 0.00 | .13532E+05 |
| 103.45 | 77.03 | 0.00 | 56.6 | 0.177E+01 | 0.15 | 154.61 | 0.15 | 0.00 | .13552E+05 |
| 103.60 | 77.03 | 0.00 | 56.7 | 0.176E+01 | 0.15 | 154.64 | 0.15 | 0.00 | .13572E+05 |
| 103.75 | 77.03 | 0.00 | 56.8 | 0.176E+01 | 0.15 | 154.67 | 0.15 | 0.00 | .13591E+05 |
| 103.90 | 77.03 | 0.00 | 56.9 | 0.176E+01 | 0.15 | 154.70 | 0.15 | 0.00 | .13611E+05 |
| 104.05 | 77.03 | 0.00 | 56.9 | 0.176E+01 | 0.15 | 154.74 | 0.15 | 0.00 | .13631E+05 |
| 104.20 | 77.03 | 0.00 | 57.0 | 0.175E+01 | 0.15 | 154.77 | 0.15 | 0.00 | .13651E+05 |
| 104.35 | 77.03 | 0.00 | 57.1 | 0.175E+01 | 0.15 | 154.80 | 0.15 | 0.00 | .13670E+05 |
| 104.50 | 77.03 | 0.00 | 57.2 | 0.175E+01 | 0.15 | 154.83 | 0.15 | 0.00 | .13690E+05 |
| 104.65 | 77.03 | 0.00 | 57.2 | 0.175E+01 | 0.15 | 154.86 | 0.15 | 0.00 | .13710E+05 |
| 104.80 | 77.03 | 0.00 | 57.3 | 0.174E+01 | 0.15 | 154.89 | 0.15 | 0.00 | .13729E+05 |
| 104.95 | 77.03 | 0.00 | 57.4 | 0.174E+01 | 0.15 | 154.93 | 0.15 | 0.00 | .13749E+05 |
| 105.10 | 77.03 | 0.00 | 57.5 | 0.174E+01 | 0.15 | 154.96 | 0.15 | 0.00 | .13769E+05 |
| 105.25 | 77.03 | 0.00 | 57.5 | 0.174E+01 | 0.15 | 154.99 | 0.15 | 0.00 | .13788E+05 |
| 105.40 | 77.03 | 0.00 | 57.6 | 0.174E+01 | 0.15 | 155.02 | 0.15 | 0.00 | .13808E+05 |
| 105.55 | 77.03 | 0.00 | 57.7 | 0.173E+01 | 0.15 | 155.05 | 0.15 | 0.00 | .13828E+05 |
| 105.70 | 77.03 | 0.00 | 57.8 | 0.173E+01 | 0.15 | 155.08 | 0.15 | 0.00 | .13847E+05 |
| 105.86 | 77.03 | 0.00 | 57.8 | 0.173E+01 | 0.15 | 155.12 | 0.15 | 0.00 | .13867E+05 |
| 106.01 | 77.03 | 0.00 | 57.9 | 0.173E+01 | 0.15 | 155.15 | 0.15 | 0.00 | .13887E+05 |
| 106.16 | 77.03 | 0.00 | 58.0 | 0.172E+01 | 0.15 | 155.18 | 0.15 | 0.00 | .13907E+05 |
| 106.31 | 77.03 | 0.00 | 58.1 | 0.172E+01 | 0.15 | 155.21 | 0.15 | 0.00 | .13926E+05 |
| 106.46 | 77.03 | 0.00 | 58.1 | 0.172E+01 | 0.15 | 155.24 | 0.15 | 0.00 | .13946E+05 |
| 106.61 | 77.03 | 0.00 | 58.2 | 0.172E+01 | 0.15 | 155.27 | 0.15 | 0.00 | .13966E+05 |
| 106.76 | 77.03 | 0.00 | 58.3 | 0.172E+01 | 0.15 | 155.31 | 0.15 | 0.00 | .13985E+05 |
| 106.91 | 77.03 | 0.00 | 58.4 | 0.171E+01 | 0.15 | 155.34 | 0.15 | 0.00 | .14005E+05 |
| 107.06 | 77.03 | 0.00 | 58.4 | 0.171E+01 | 0.15 | 155.37 | 0.15 | 0.00 | .14025E+05 |
| 107.21 | 77.03 | 0.00 | 58.5 | 0.171E+01 | 0.15 | 155.40 | 0.15 | 0.00 | .14044E+05 |
| 107.36 | 77.03 | 0.00 | 58.6 | 0.171E+01 | 0.15 | 155.43 | 0.15 | 0.00 | .14064E+05 |
| 107.51 | 77.03 | 0.00 | 58.7 | 0.170E+01 | 0.15 | 155.46 | 0.15 | 0.00 | .14084E+05 |
| 107.66 | 77.03 | 0.00 | 58.7 | 0.170E+01 | 0.15 | 155.50 | 0.15 | 0.00 | .14103E+05 |
| 107.81 | 77.03 | 0.00 | 58.8 | 0.170E+01 | 0.15 | 155.53 | 0.15 | 0.00 | .14123E+05 |
| 107.96 | 77.03 | 0.00 | 58.9 | 0.170E+01 | 0.15 | 155.56 | 0.15 | 0.00 | .14143E+05 |
| 108.11 | 77.03 | 0.00 | 59.0 | 0.170E+01 | 0.15 | 155.59 | 0.15 | 0.00 | .14163E+05 |
| 108.26 | 77.03 | 0.00 | 59.0 | 0.169E+01 | 0.15 | 155.62 | 0.15 | 0.00 | .14182E+05 |
| 108.41 | 77.03 | 0.00 | 59.1 | 0.169E+01 | 0.15 | 155.66 | 0.15 | 0.00 | .14202E+05 |
| 108.56 | 77.03 | 0.00 | 59.2 | 0.169E+01 | 0.15 | 155.69 | 0.15 | 0.00 | .14222E+05 |
| 108.71 | 77.03 | 0.00 | 59.3 | 0.169E+01 | 0.15 | 155.72 | 0.15 | 0.00 | .14241E+05 |
| 108.86 | 77.03 | 0.00 | 59.4 | 0.168E+01 | 0.15 | 155.75 | 0.15 | 0.00 | .14261E+05 |
| 109.01 | 77.03 | 0.00 | 59.4 | 0.168E+01 | 0.16 | 155.78 | 0.16 | 0.00 | .14281E+05 |
| 109.16 | 77.03 | 0.00 | 59.5 | 0.168E+01 | 0.16 | 155.81 | 0.16 | 0.00 | .14300E+05 |
| 109.31 | 77.03 | 0.00 | 59.6 | 0.168E+01 | 0.16 | 155.85 | 0.16 | 0.00 | .14320E+05 |
| 109.46 | 77.03 | 0.00 | 59.7 | 0.168E+01 | 0.16 | 155.88 | 0.16 | 0.00 | .14340E+05 |
| 109.61 | 77.03 | 0.00 | 59.7 | 0.167E+01 | 0.16 | 155.91 | 0.16 | 0.00 | .14359E+05 |
| 109.76 | 77.03 | 0.00 | 59.8 | 0.167E+01 | 0.16 | 155.94 | 0.16 | 0.00 | .14379E+05 |
| 109.91 | 77.03 | 0.00 | 59.9 | 0.167E+01 | 0.16 | 155.97 | 0.16 | 0.00 | .14399E+05 |
| 110.06 | 77.03 | 0.00 | 60.0 | 0.167E+01 | 0.16 | 156.01 | 0.16 | 0.00 | .14419E+05 |
| 110.21 | 77.03 | 0.00 | 60.0 | 0.167E+01 | 0.16 | 156.04 | 0.16 | 0.00 | .14438E+05 |
| 110.36 | 77.03 | 0.00 | 60.1 | 0.166E+01 | 0.16 | 156.07 | 0.16 | 0.00 | .14458E+05 |
| 110.51 | 77.03 | 0.00 | 60.2 | 0.166E+01 | 0.16 | 156.10 | 0.16 | 0.00 | .14478E+05 |
| 110.66 | 77.03 | 0.00 | 60.3 | 0.166E+01 | 0.16 | 156.13 | 0.16 | 0.00 | .14497E+05 |
| 110.81 | 77.03 | 0.00 | 60.3 | 0.166E+01 | 0.16 | 156.17 | 0.16 | 0.00 | .14517E+05 |
| 110.96 | 77.03 | 0.00 | 60.4 | 0.166E+01 | 0.16 | 156.20 | 0.16 | 0.00 | .14537E+05 |

| | | | | | | | | | |
|---|---|---|---|---|---|---|---|---|---|
| 111.11 | 77.03 | 0.00 | 60.5 | 0.165E+01 | 0.16 | 156.23 | 0.16 | 0.00 | .14556E+05 |
| 111.26 | 77.03 | 0.00 | 60.6 | 0.165E+01 | 0.16 | 156.26 | 0.16 | 0.00 | .14576E+05 |
| 111.41 | 77.03 | 0.00 | 60.6 | 0.165E+01 | 0.16 | 156.29 | 0.16 | 0.00 | .14596E+05 |
| 111.56 | 77.03 | 0.00 | 60.7 | 0.165E+01 | 0.16 | 156.33 | 0.16 | 0.00 | .14615E+05 |
| 111.72 | 77.03 | 0.00 | 60.8 | 0.164E+01 | 0.16 | 156.36 | 0.16 | 0.00 | .14635E+05 |
| 111.87 | 77.03 | 0.00 | 60.9 | 0.164E+01 | 0.16 | 156.39 | 0.16 | 0.00 | .14655E+05 |
| 112.02 | 77.03 | 0.00 | 61.0 | 0.164E+01 | 0.16 | 156.42 | 0.16 | 0.00 | .14675E+05 |
| 112.17 | 77.03 | 0.00 | 61.0 | 0.164E+01 | 0.16 | 156.45 | 0.16 | 0.00 | .14694E+05 |
| 112.32 | 77.03 | 0.00 | 61.1 | 0.164E+01 | 0.16 | 156.49 | 0.16 | 0.00 | .14714E+05 |
| 112.47 | 77.03 | 0.00 | 61.2 | 0.163E+01 | 0.16 | 156.52 | 0.16 | 0.00 | .14734E+05 |
| 112.62 | 77.03 | 0.00 | 61.3 | 0.163E+01 | 0.16 | 156.55 | 0.16 | 0.00 | .14753E+05 |
| 112.77 | 77.03 | 0.00 | 61.3 | 0.163E+01 | 0.16 | 156.58 | 0.16 | 0.00 | .14773E+05 |
| 112.92 | 77.03 | 0.00 | 61.4 | 0.163E+01 | 0.16 | 156.62 | 0.16 | 0.00 | .14793E+05 |
| 113.07 | 77.03 | 0.00 | 61.5 | 0.163E+01 | 0.16 | 156.65 | 0.16 | 0.00 | .14812E+05 |
| 113.22 | 77.03 | 0.00 | 61.6 | 0.162E+01 | 0.16 | 156.68 | 0.16 | 0.00 | .14832E+05 |
| 113.37 | 77.03 | 0.00 | 61.6 | 0.162E+01 | 0.16 | 156.71 | 0.16 | 0.00 | .14852E+05 |
| 113.52 | 77.03 | 0.00 | 61.7 | 0.162E+01 | 0.16 | 156.74 | 0.16 | 0.00 | .14871E+05 |
| 113.67 | 77.03 | 0.00 | 61.8 | 0.162E+01 | 0.16 | 156.78 | 0.16 | 0.00 | .14891E+05 |
| 113.82 | 77.03 | 0.00 | 61.9 | 0.162E+01 | 0.16 | 156.81 | 0.16 | 0.00 | .14911E+05 |
| 113.97 | 77.03 | 0.00 | 61.9 | 0.161E+01 | 0.16 | 156.84 | 0.16 | 0.00 | .14931E+05 |
| 114.12 | 77.03 | 0.00 | 62.0 | 0.161E+01 | 0.16 | 156.87 | 0.16 | 0.00 | .14950E+05 |
| 114.27 | 77.03 | 0.00 | 62.1 | 0.161E+01 | 0.16 | 156.90 | 0.16 | 0.00 | .14970E+05 |
| 114.42 | 77.03 | 0.00 | 62.2 | 0.161E+01 | 0.16 | 156.94 | 0.16 | 0.00 | .14990E+05 |
| 114.57 | 77.03 | 0.00 | 62.3 | 0.161E+01 | 0.16 | 156.97 | 0.16 | 0.00 | .15009E+05 |
| 114.72 | 77.03 | 0.00 | 62.3 | 0.160E+01 | 0.16 | 157.00 | 0.16 | 0.00 | .15029E+05 |
| 114.87 | 77.03 | 0.00 | 62.4 | 0.160E+01 | 0.16 | 157.03 | 0.16 | 0.00 | .15049E+05 |
| 115.02 | 77.03 | 0.00 | 62.5 | 0.160E+01 | 0.16 | 157.07 | 0.16 | 0.00 | .15068E+05 |
| 115.17 | 77.03 | 0.00 | 62.6 | 0.160E+01 | 0.16 | 157.10 | 0.16 | 0.00 | .15088E+05 |
| 115.32 | 77.03 | 0.00 | 62.6 | 0.160E+01 | 0.16 | 157.13 | 0.16 | 0.00 | .15108E+05 |
| 115.47 | 77.03 | 0.00 | 62.7 | 0.159E+01 | 0.16 | 157.16 | 0.16 | 0.00 | .15127E+05 |
| 115.62 | 77.03 | 0.00 | 62.8 | 0.159E+01 | 0.16 | 157.20 | 0.16 | 0.00 | .15147E+05 |
| 115.77 | 77.03 | 0.00 | 62.9 | 0.159E+01 | 0.16 | 157.23 | 0.16 | 0.00 | .15167E+05 |
| 115.92 | 77.03 | 0.00 | 63.0 | 0.159E+01 | 0.16 | 157.26 | 0.16 | 0.00 | .15187E+05 |
| 116.07 | 77.03 | 0.00 | 63.0 | 0.159E+01 | 0.16 | 157.29 | 0.16 | 0.00 | .15206E+05 |
| 116.22 | 77.03 | 0.00 | 63.1 | 0.158E+01 | 0.16 | 157.32 | 0.16 | 0.00 | .15226E+05 |
| 116.37 | 77.03 | 0.00 | 63.2 | 0.158E+01 | 0.16 | 157.36 | 0.16 | 0.00 | .15246E+05 |
| 116.52 | 77.03 | 0.00 | 63.3 | 0.158E+01 | 0.16 | 157.39 | 0.16 | 0.00 | .15265E+05 |
| 116.67 | 77.03 | 0.00 | 63.3 | 0.158E+01 | 0.16 | 157.42 | 0.16 | 0.00 | .15285E+05 |
| 116.82 | 77.03 | 0.00 | 63.4 | 0.158E+01 | 0.16 | 157.45 | 0.16 | 0.00 | .15305E+05 |
| 116.97 | 77.03 | 0.00 | 63.5 | 0.157E+01 | 0.16 | 157.49 | 0.16 | 0.00 | .15324E+05 |
| 117.12 | 77.03 | 0.00 | 63.6 | 0.157E+01 | 0.16 | 157.52 | 0.16 | 0.00 | .15344E+05 |
| 117.27 | 77.03 | 0.00 | 63.7 | 0.157E+01 | 0.16 | 157.55 | 0.16 | 0.00 | .15364E+05 |
| 117.42 | 77.03 | 0.00 | 63.7 | 0.157E+01 | 0.16 | 157.58 | 0.16 | 0.00 | .15383E+05 |
| 117.57 | 77.03 | 0.00 | 63.8 | 0.157E+01 | 0.16 | 157.62 | 0.16 | 0.00 | .15403E+05 |
| 117.73 | 77.03 | 0.00 | 63.9 | 0.157E+01 | 0.16 | 157.65 | 0.16 | 0.00 | .15423E+05 |
| 117.88 | 77.03 | 0.00 | 64.0 | 0.156E+01 | 0.16 | 157.68 | 0.16 | 0.00 | .15443E+05 |
| 118.03 | 77.03 | 0.00 | 64.0 | 0.156E+01 | 0.17 | 157.71 | 0.17 | 0.00 | .15462E+05 |
| 118.18 | 77.03 | 0.00 | 64.1 | 0.156E+01 | 0.17 | 157.75 | 0.17 | 0.00 | .15482E+05 |
| 118.33 | 77.03 | 0.00 | 64.2 | 0.156E+01 | 0.17 | 157.78 | 0.17 | 0.00 | .15502E+05 |
| 118.48 | 77.03 | 0.00 | 64.3 | 0.156E+01 | 0.17 | 157.81 | 0.17 | 0.00 | .15521E+05 |
| 118.63 | 77.03 | 0.00 | 64.4 | 0.155E+01 | 0.17 | 157.84 | 0.17 | 0.00 | .15541E+05 |
| 118.78 | 77.03 | 0.00 | 64.4 | 0.155E+01 | 0.17 | 157.88 | 0.17 | 0.00 | .15561E+05 |
| 118.93 | 77.03 | 0.00 | 64.5 | 0.155E+01 | 0.17 | 157.91 | 0.17 | 0.00 | .15580E+05 |
| 119.08 | 77.03 | 0.00 | 64.6 | 0.155E+01 | 0.17 | 157.94 | 0.17 | 0.00 | .15600E+05 |
| 119.23 | 77.03 | 0.00 | 64.7 | 0.155E+01 | 0.17 | 157.97 | 0.17 | 0.00 | .15620E+05 |
| 119.38 | 77.03 | 0.00 | 64.7 | 0.154E+01 | 0.17 | 158.01 | 0.17 | 0.00 | .15639E+05 |
| 119.53 | 77.03 | 0.00 | 64.8 | 0.154E+01 | 0.17 | 158.04 | 0.17 | 0.00 | .15659E+05 |
| 119.68 | 77.03 | 0.00 | 64.9 | 0.154E+01 | 0.17 | 158.07 | 0.17 | 0.00 | .15679E+05 |
| 119.83 | 77.03 | 0.00 | 65.0 | 0.154E+01 | 0.17 | 158.10 | 0.17 | 0.00 | .15699E+05 |
| 119.98 | 77.03 | 0.00 | 65.1 | 0.154E+01 | 0.17 | 158.14 | 0.17 | 0.00 | .15718E+05 |
| 120.13 | 77.03 | 0.00 | 65.1 | 0.154E+01 | 0.17 | 158.17 | 0.17 | 0.00 | .15738E+05 |
| 120.28 | 77.03 | 0.00 | 65.2 | 0.153E+01 | 0.17 | 158.20 | 0.17 | 0.00 | .15758E+05 |
| 120.43 | 77.03 | 0.00 | 65.3 | 0.153E+01 | 0.17 | 158.23 | 0.17 | 0.00 | .15777E+05 |
| 120.58 | 77.03 | 0.00 | 65.4 | 0.153E+01 | 0.17 | 158.27 | 0.17 | 0.00 | .15797E+05 |
| 120.73 | 77.03 | 0.00 | 65.4 | 0.153E+01 | 0.17 | 158.30 | 0.17 | 0.00 | .15817E+05 |
| 120.88 | 77.03 | 0.00 | 65.5 | 0.153E+01 | 0.17 | 158.33 | 0.17 | 0.00 | .15836E+05 |
| 121.03 | 77.03 | 0.00 | 65.6 | 0.152E+01 | 0.17 | 158.37 | 0.17 | 0.00 | .15856E+05 |
| 121.18 | 77.03 | 0.00 | 65.7 | 0.152E+01 | 0.17 | 158.40 | 0.17 | 0.00 | .15876E+05 |
| 121.33 | 77.03 | 0.00 | 65.8 | 0.152E+01 | 0.17 | 158.43 | 0.17 | 0.00 | .15895E+05 |
| 121.48 | 77.03 | 0.00 | 65.8 | 0.152E+01 | 0.17 | 158.46 | 0.17 | 0.00 | .15915E+05 |

| | | | | | | | | | |
|---|---|---|---|---|---|---|---|---|---|
| 121.63 | 77.03 | 0.00 | 65.9 | 0.152E+01 | 0.17 | 158.50 | 0.17 | 0.00 | .15935E+05 |
| 121.78 | 77.03 | 0.00 | 66.0 | 0.152E+01 | 0.17 | 158.53 | 0.17 | 0.00 | .15955E+05 |
| 121.93 | 77.03 | 0.00 | 66.1 | 0.151E+01 | 0.17 | 158.56 | 0.17 | 0.00 | .15974E+05 |
| 122.08 | 77.03 | 0.00 | 66.2 | 0.151E+01 | 0.17 | 158.59 | 0.17 | 0.00 | .15994E+05 |
| 122.23 | 77.03 | 0.00 | 66.2 | 0.151E+01 | 0.17 | 158.63 | 0.17 | 0.00 | .16014E+05 |
| 122.38 | 77.03 | 0.00 | 66.3 | 0.151E+01 | 0.17 | 158.66 | 0.17 | 0.00 | .16033E+05 |
| 122.53 | 77.03 | 0.00 | 66.4 | 0.151E+01 | 0.17 | 158.69 | 0.17 | 0.00 | .16053E+05 |
| 122.68 | 77.03 | 0.00 | 66.5 | 0.150E+01 | 0.17 | 158.73 | 0.17 | 0.00 | .16073E+05 |
| 122.83 | 77.03 | 0.00 | 66.6 | 0.150E+01 | 0.17 | 158.76 | 0.17 | 0.00 | .16092E+05 |
| 122.98 | 77.03 | 0.00 | 66.6 | 0.150E+01 | 0.17 | 158.79 | 0.17 | 0.00 | .16112E+05 |
| 123.13 | 77.03 | 0.00 | 66.7 | 0.150E+01 | 0.17 | 158.82 | 0.17 | 0.00 | .16132E+05 |
| 123.28 | 77.03 | 0.00 | 66.8 | 0.150E+01 | 0.17 | 158.86 | 0.17 | 0.00 | .16151E+05 |
| 123.43 | 77.03 | 0.00 | 66.9 | 0.150E+01 | 0.17 | 158.89 | 0.17 | 0.00 | .16171E+05 |
| 123.59 | 77.03 | 0.00 | 66.9 | 0.149E+01 | 0.17 | 158.92 | 0.17 | 0.00 | .16191E+05 |
| 123.74 | 77.03 | 0.00 | 67.0 | 0.149E+01 | 0.17 | 158.95 | 0.17 | 0.00 | .16211E+05 |
| 123.89 | 77.03 | 0.00 | 67.1 | 0.149E+01 | 0.17 | 158.99 | 0.17 | 0.00 | .16230E+05 |
| 124.04 | 77.03 | 0.00 | 67.2 | 0.149E+01 | 0.17 | 159.02 | 0.17 | 0.00 | .16250E+05 |
| 124.19 | 77.03 | 0.00 | 67.3 | 0.149E+01 | 0.17 | 159.05 | 0.17 | 0.00 | .16270E+05 |
| 124.34 | 77.03 | 0.00 | 67.3 | 0.148E+01 | 0.17 | 159.09 | 0.17 | 0.00 | .16289E+05 |
| 124.49 | 77.03 | 0.00 | 67.4 | 0.148E+01 | 0.17 | 159.12 | 0.17 | 0.00 | .16309E+05 |
| 124.64 | 77.03 | 0.00 | 67.5 | 0.148E+01 | 0.17 | 159.15 | 0.17 | 0.00 | .16329E+05 |
| 124.79 | 77.03 | 0.00 | 67.6 | 0.148E+01 | 0.17 | 159.18 | 0.17 | 0.00 | .16348E+05 |
| 124.94 | 77.03 | 0.00 | 67.7 | 0.148E+01 | 0.17 | 159.22 | 0.17 | 0.00 | .16368E+05 |
| 125.09 | 77.03 | 0.00 | 67.7 | 0.148E+01 | 0.17 | 159.25 | 0.17 | 0.00 | .16388E+05 |
| 125.24 | 77.03 | 0.00 | 67.8 | 0.147E+01 | 0.17 | 159.28 | 0.17 | 0.00 | .16407E+05 |
| 125.39 | 77.03 | 0.00 | 67.9 | 0.147E+01 | 0.17 | 159.32 | 0.17 | 0.00 | .16427E+05 |
| 125.54 | 77.03 | 0.00 | 68.0 | 0.147E+01 | 0.17 | 159.35 | 0.17 | 0.00 | .16447E+05 |
| 125.69 | 77.03 | 0.00 | 68.1 | 0.147E+01 | 0.17 | 159.38 | 0.17 | 0.00 | .16467E+05 |
| 125.84 | 77.03 | 0.00 | 68.1 | 0.147E+01 | 0.17 | 159.42 | 0.17 | 0.00 | .16486E+05 |
| 125.99 | 77.03 | 0.00 | 68.2 | 0.147E+01 | 0.17 | 159.45 | 0.17 | 0.00 | .16506E+05 |
| 126.14 | 77.03 | 0.00 | 68.3 | 0.146E+01 | 0.17 | 159.48 | 0.17 | 0.00 | .16526E+05 |
| 126.29 | 77.03 | 0.00 | 68.4 | 0.146E+01 | 0.17 | 159.51 | 0.17 | 0.00 | .16545E+05 |
| 126.44 | 77.03 | 0.00 | 68.5 | 0.146E+01 | 0.17 | 159.55 | 0.17 | 0.00 | .16565E+05 |
| 126.59 | 77.03 | 0.00 | 68.5 | 0.146E+01 | 0.17 | 159.58 | 0.17 | 0.00 | .16585E+05 |
| 126.74 | 77.03 | 0.00 | 68.6 | 0.146E+01 | 0.17 | 159.61 | 0.17 | 0.00 | .16604E+05 |
| 126.89 | 77.03 | 0.00 | 68.7 | 0.146E+01 | 0.17 | 159.65 | 0.17 | 0.00 | .16624E+05 |
| 127.04 | 77.03 | 0.00 | 68.8 | 0.145E+01 | 0.18 | 159.68 | 0.18 | 0.00 | .16644E+05 |
| 127.19 | 77.03 | 0.00 | 68.9 | 0.145E+01 | 0.18 | 159.71 | 0.18 | 0.00 | .16663E+05 |
| 127.34 | 77.03 | 0.00 | 68.9 | 0.145E+01 | 0.18 | 159.74 | 0.18 | 0.00 | .16683E+05 |
| 127.49 | 77.03 | 0.00 | 69.0 | 0.145E+01 | 0.18 | 159.78 | 0.18 | 0.00 | .16703E+05 |
| 127.64 | 77.03 | 0.00 | 69.1 | 0.145E+01 | 0.18 | 159.81 | 0.18 | 0.00 | .16723E+05 |
| 127.79 | 77.03 | 0.00 | 69.2 | 0.145E+01 | 0.18 | 159.84 | 0.18 | 0.00 | .16742E+05 |
| 127.94 | 77.03 | 0.00 | 69.3 | 0.144E+01 | 0.18 | 159.88 | 0.18 | 0.00 | .16762E+05 |
| 128.09 | 77.03 | 0.00 | 69.3 | 0.144E+01 | 0.18 | 159.91 | 0.18 | 0.00 | .16782E+05 |
| 128.24 | 77.03 | 0.00 | 69.4 | 0.144E+01 | 0.18 | 159.94 | 0.18 | 0.00 | .16801E+05 |
| 128.39 | 77.03 | 0.00 | 69.5 | 0.144E+01 | 0.18 | 159.98 | 0.18 | 0.00 | .16821E+05 |
| 128.54 | 77.03 | 0.00 | 69.6 | 0.144E+01 | 0.18 | 160.01 | 0.18 | 0.00 | .16841E+05 |
| 128.69 | 77.03 | 0.00 | 69.7 | 0.144E+01 | 0.18 | 160.04 | 0.18 | 0.00 | .16860E+05 |
| 128.84 | 77.03 | 0.00 | 69.7 | 0.143E+01 | 0.18 | 160.08 | 0.18 | 0.00 | .16880E+05 |
| 128.99 | 77.03 | 0.00 | 69.8 | 0.143E+01 | 0.18 | 160.11 | 0.18 | 0.00 | .16900E+05 |
| 129.14 | 77.03 | 0.00 | 69.9 | 0.143E+01 | 0.18 | 160.14 | 0.18 | 0.00 | .16919E+05 |
| 129.29 | 77.03 | 0.00 | 70.0 | 0.143E+01 | 0.18 | 160.18 | 0.18 | 0.00 | .16939E+05 |
| 129.45 | 77.03 | 0.00 | 70.1 | 0.143E+01 | 0.18 | 160.21 | 0.18 | 0.00 | .16959E+05 |
| 129.60 | 77.03 | 0.00 | 70.1 | 0.143E+01 | 0.18 | 160.24 | 0.18 | 0.00 | .16979E+05 |
| 129.75 | 77.03 | 0.00 | 70.2 | 0.142E+01 | 0.18 | 160.27 | 0.18 | 0.00 | .16998E+05 |
| 129.90 | 77.03 | 0.00 | 70.3 | 0.142E+01 | 0.18 | 160.31 | 0.18 | 0.00 | .17018E+05 |
| 130.05 | 77.03 | 0.00 | 70.4 | 0.142E+01 | 0.18 | 160.34 | 0.18 | 0.00 | .17038E+05 |
| 130.20 | 77.03 | 0.00 | 70.5 | 0.142E+01 | 0.18 | 160.37 | 0.18 | 0.00 | .17057E+05 |
| 130.35 | 77.03 | 0.00 | 70.5 | 0.142E+01 | 0.18 | 160.41 | 0.18 | 0.00 | .17077E+05 |
| 130.50 | 77.03 | 0.00 | 70.6 | 0.142E+01 | 0.18 | 160.44 | 0.18 | 0.00 | .17097E+05 |
| 130.65 | 77.03 | 0.00 | 70.7 | 0.141E+01 | 0.18 | 160.47 | 0.18 | 0.00 | .17116E+05 |
| 130.80 | 77.03 | 0.00 | 70.8 | 0.141E+01 | 0.18 | 160.51 | 0.18 | 0.00 | .17136E+05 |
| 130.95 | 77.03 | 0.00 | 70.9 | 0.141E+01 | 0.18 | 160.54 | 0.18 | 0.00 | .17156E+05 |

Cumulative travel time = 17155.8145 sec ( 4.77 hrs)
Plume is LATERALLY FULLY MIXED at the end of the buoyant spreading regime.

END OF MOD241: BUOYANT AMBIENT SPREADING

---

---

BEGIN MOD261: PASSIVE AMBIENT MIXING IN UNIFORM AMBIENT

Vertical diffusivity (initial value) = 0.216E-02 m^2/s
Horizontal diffusivity (initial value) = 0.108E-01 m^2/s

Profile definitions:
BV = Gaussian s.d.*sqrt(pi/2) (46%) thickness, measured vertically
= or equal to layer depth, if fully mixed
BH = Gaussian s.d.*sqrt(pi/2) (46%) half-width,
measured horizontally in Y-direction
ZU = upper plume boundary (Z-coordinate)
ZL = lower plume boundary (Z-coordinate)
S = hydrodynamic centerline dilution
C = centerline concentration (includes reaction effects, if any)
TT = Cumulative travel time

Plume Stage 2 (bank attached):

| X | Y | Z | S | C | BV | BH | ZU | ZL | TT |
|---|---|---|---|---|---|---|---|---|---|
| 130.95 | 77.03 | 0.00 | 70.9 | 0.141E+01 | 0.18 | 160.54 | 0.18 | 0.00 | .17156E+05 |
| 155.29 | 77.03 | 0.00 | 70.9 | 0.141E+01 | 0.18 | 160.54 | 0.18 | 0.00 | .20346E+05 |
| 179.64 | 77.03 | 0.00 | 70.9 | 0.141E+01 | 0.18 | 160.54 | 0.18 | 0.00 | .23537E+05 |
| 203.98 | 77.03 | 0.00 | 70.9 | 0.141E+01 | 0.18 | 160.54 | 0.18 | 0.00 | .26728E+05 |
| 228.33 | 77.03 | 0.00 | 70.9 | 0.141E+01 | 0.18 | 160.54 | 0.18 | 0.00 | .29919E+05 |
| 252.67 | 77.03 | 0.00 | 70.9 | 0.141E+01 | 0.18 | 160.54 | 0.18 | 0.00 | .33109E+05 |
| 277.02 | 77.03 | 0.00 | 70.9 | 0.141E+01 | 0.18 | 160.54 | 0.18 | 0.00 | .36300E+05 |
| 301.36 | 77.03 | 0.00 | 70.9 | 0.141E+01 | 0.18 | 160.54 | 0.18 | 0.00 | .39491E+05 |
| 325.71 | 77.03 | 0.00 | 70.9 | 0.141E+01 | 0.18 | 160.54 | 0.18 | 0.00 | .42682E+05 |
| 350.05 | 77.03 | 0.00 | 70.9 | 0.141E+01 | 0.18 | 160.54 | 0.18 | 0.00 | .45872E+05 |
| 374.40 | 77.03 | 0.00 | 71.0 | 0.141E+01 | 0.18 | 160.54 | 0.18 | 0.00 | .49063E+05 |
| 398.75 | 77.03 | 0.00 | 71.0 | 0.141E+01 | 0.18 | 160.54 | 0.18 | 0.00 | .52254E+05 |
| 423.09 | 77.03 | 0.00 | 71.0 | 0.141E+01 | 0.18 | 160.54 | 0.18 | 0.00 | .55444E+05 |
| 447.44 | 77.03 | 0.00 | 71.0 | 0.141E+01 | 0.18 | 160.54 | 0.18 | 0.00 | .58635E+05 |
| 471.78 | 77.03 | 0.00 | 71.0 | 0.141E+01 | 0.18 | 160.54 | 0.18 | 0.00 | .61826E+05 |
| 496.13 | 77.03 | 0.00 | 71.0 | 0.141E+01 | 0.18 | 160.54 | 0.18 | 0.00 | .65017E+05 |
| 520.47 | 77.03 | 0.00 | 71.0 | 0.141E+01 | 0.18 | 160.54 | 0.18 | 0.00 | .68207E+05 |
| 544.82 | 77.03 | 0.00 | 71.0 | 0.141E+01 | 0.18 | 160.54 | 0.18 | 0.00 | .71398E+05 |
| 569.16 | 77.03 | 0.00 | 71.0 | 0.141E+01 | 0.18 | 160.54 | 0.18 | 0.00 | .74589E+05 |
| 593.51 | 77.03 | 0.00 | 71.0 | 0.141E+01 | 0.18 | 160.54 | 0.18 | 0.00 | .77779E+05 |
| 617.85 | 77.03 | 0.00 | 71.0 | 0.141E+01 | 0.18 | 160.54 | 0.18 | 0.00 | .80970E+05 |
| 642.20 | 77.03 | 0.00 | 71.0 | 0.141E+01 | 0.18 | 160.54 | 0.18 | 0.00 | .84161E+05 |
| 666.54 | 77.03 | 0.00 | 71.1 | 0.141E+01 | 0.18 | 160.54 | 0.18 | 0.00 | .87352E+05 |
| 690.89 | 77.03 | 0.00 | 71.1 | 0.141E+01 | 0.18 | 160.54 | 0.18 | 0.00 | .90542E+05 |
| 715.23 | 77.03 | 0.00 | 71.1 | 0.141E+01 | 0.18 | 160.54 | 0.18 | 0.00 | .93733E+05 |
| 739.58 | 77.03 | 0.00 | 71.1 | 0.141E+01 | 0.18 | 160.54 | 0.18 | 0.00 | .96924E+05 |
| 763.92 | 77.03 | 0.00 | 71.1 | 0.141E+01 | 0.18 | 160.54 | 0.18 | 0.00 | .10011E+06 |
| 788.27 | 77.03 | 0.00 | 71.1 | 0.141E+01 | 0.18 | 160.54 | 0.18 | 0.00 | .10331E+06 |
| 812.62 | 77.03 | 0.00 | 71.1 | 0.141E+01 | 0.18 | 160.54 | 0.18 | 0.00 | .10650E+06 |
| 836.96 | 77.03 | 0.00 | 71.1 | 0.141E+01 | 0.18 | 160.54 | 0.18 | 0.00 | .10969E+06 |
| 861.31 | 77.03 | 0.00 | 71.1 | 0.141E+01 | 0.18 | 160.54 | 0.18 | 0.00 | .11288E+06 |
| 885.65 | 77.03 | 0.00 | 71.1 | 0.141E+01 | 0.18 | 160.54 | 0.18 | 0.00 | .11607E+06 |
| 910.00 | 77.03 | 0.00 | 71.1 | 0.141E+01 | 0.18 | 160.54 | 0.18 | 0.00 | .11926E+06 |
| 934.34 | 77.03 | 0.00 | 71.1 | 0.141E+01 | 0.18 | 160.54 | 0.18 | 0.00 | .12245E+06 |
| 958.69 | 77.03 | 0.00 | 71.2 | 0.141E+01 | 0.18 | 160.54 | 0.18 | 0.00 | .12564E+06 |
| 983.03 | 77.03 | 0.00 | 71.2 | 0.141E+01 | 0.18 | 160.54 | 0.18 | 0.00 | .12883E+06 |
| 1007.38 | 77.03 | 0.00 | 71.2 | 0.141E+01 | 0.18 | 160.54 | 0.18 | 0.00 | .13202E+06 |
| 1031.72 | 77.03 | 0.00 | 71.2 | 0.140E+01 | 0.18 | 160.54 | 0.18 | 0.00 | .13521E+06 |
| 1056.07 | 77.03 | 0.00 | 71.2 | 0.140E+01 | 0.18 | 160.54 | 0.18 | 0.00 | .13840E+06 |
| 1080.41 | 77.03 | 0.00 | 71.2 | 0.140E+01 | 0.18 | 160.54 | 0.18 | 0.00 | .14159E+06 |
| 1104.76 | 77.03 | 0.00 | 71.2 | 0.140E+01 | 0.18 | 160.54 | 0.18 | 0.00 | .14478E+06 |
| 1129.10 | 77.03 | 0.00 | 71.2 | 0.140E+01 | 0.18 | 160.54 | 0.18 | 0.00 | .14798E+06 |
| 1153.45 | 77.03 | 0.00 | 71.2 | 0.140E+01 | 0.18 | 160.54 | 0.18 | 0.00 | .15117E+06 |
| 1177.79 | 77.03 | 0.00 | 71.2 | 0.140E+01 | 0.18 | 160.54 | 0.18 | 0.00 | .15436E+06 |
| 1202.14 | 77.03 | 0.00 | 71.2 | 0.140E+01 | 0.18 | 160.54 | 0.18 | 0.00 | .15755E+06 |
| 1226.48 | 77.03 | 0.00 | 71.2 | 0.140E+01 | 0.18 | 160.54 | 0.18 | 0.00 | .16074E+06 |
| 1250.83 | 77.03 | 0.00 | 71.3 | 0.140E+01 | 0.18 | 160.54 | 0.18 | 0.00 | .16393E+06 |
| 1275.17 | 77.03 | 0.00 | 71.3 | 0.140E+01 | 0.18 | 160.54 | 0.18 | 0.00 | .16712E+06 |
| 1299.52 | 77.03 | 0.00 | 71.3 | 0.140E+01 | 0.18 | 160.54 | 0.18 | 0.00 | .17031E+06 |
| 1323.87 | 77.03 | 0.00 | 71.3 | 0.140E+01 | 0.18 | 160.54 | 0.18 | 0.00 | .17350E+06 |
| 1348.21 | 77.03 | 0.00 | 71.3 | 0.140E+01 | 0.18 | 160.54 | 0.18 | 0.00 | .17669E+06 |
| 1372.56 | 77.03 | 0.00 | 71.3 | 0.140E+01 | 0.18 | 160.54 | 0.18 | 0.00 | .17988E+06 |
| 1396.90 | 77.03 | 0.00 | 71.3 | 0.140E+01 | 0.18 | 160.54 | 0.18 | 0.00 | .18307E+06 |

| | | | | | | | | | |
|---|---|---|---|---|---|---|---|---|---|
| 1421.25 | 77.03 | 0.00 | 71.3 | 0.140E+01 | 0.18 | 160.54 | 0.18 | 0.00 | .18626E+06 |
| 1445.59 | 77.03 | 0.00 | 71.3 | 0.140E+01 | 0.18 | 160.54 | 0.18 | 0.00 | .18945E+06 |
| 1469.94 | 77.03 | 0.00 | 71.3 | 0.140E+01 | 0.18 | 160.54 | 0.18 | 0.00 | .19265E+06 |
| 1494.28 | 77.03 | 0.00 | 71.3 | 0.140E+01 | 0.18 | 160.54 | 0.18 | 0.00 | .19584E+06 |
| 1518.63 | 77.03 | 0.00 | 71.3 | 0.140E+01 | 0.18 | 160.54 | 0.18 | 0.00 | .19903E+06 |
| 1542.97 | 77.03 | 0.00 | 71.4 | 0.140E+01 | 0.18 | 160.54 | 0.18 | 0.00 | .20222E+06 |
| 1567.32 | 77.03 | 0.00 | 71.4 | 0.140E+01 | 0.18 | 160.54 | 0.18 | 0.00 | .20541E+06 |
| 1591.66 | 77.03 | 0.00 | 71.4 | 0.140E+01 | 0.18 | 160.54 | 0.18 | 0.00 | .20860E+06 |
| 1616.01 | 77.03 | 0.00 | 71.4 | 0.140E+01 | 0.18 | 160.54 | 0.18 | 0.00 | .21179E+06 |
| 1640.35 | 77.03 | 0.00 | 71.4 | 0.140E+01 | 0.18 | 160.54 | 0.18 | 0.00 | .21498E+06 |
| 1664.70 | 77.03 | 0.00 | 71.4 | 0.140E+01 | 0.18 | 160.54 | 0.18 | 0.00 | .21817E+06 |
| 1689.04 | 77.03 | 0.00 | 71.4 | 0.140E+01 | 0.18 | 160.54 | 0.18 | 0.00 | .22136E+06 |
| 1713.39 | 77.03 | 0.00 | 71.4 | 0.140E+01 | 0.18 | 160.54 | 0.18 | 0.00 | .22455E+06 |
| 1737.73 | 77.03 | 0.00 | 71.4 | 0.140E+01 | 0.18 | 160.54 | 0.18 | 0.00 | .22774E+06 |
| 1762.08 | 77.03 | 0.00 | 71.4 | 0.140E+01 | 0.18 | 160.54 | 0.18 | 0.00 | .23093E+06 |
| 1786.42 | 77.03 | 0.00 | 71.4 | 0.140E+01 | 0.18 | 160.54 | 0.18 | 0.00 | .23412E+06 |
| 1810.77 | 77.03 | 0.00 | 71.5 | 0.140E+01 | 0.18 | 160.54 | 0.18 | 0.00 | .23732E+06 |
| 1835.11 | 77.03 | 0.00 | 71.5 | 0.140E+01 | 0.18 | 160.54 | 0.18 | 0.00 | .24051E+06 |
| 1859.46 | 77.03 | 0.00 | 71.5 | 0.140E+01 | 0.18 | 160.54 | 0.18 | 0.00 | .24370E+06 |
| 1883.81 | 77.03 | 0.00 | 71.5 | 0.140E+01 | 0.18 | 160.54 | 0.18 | 0.00 | .24689E+06 |
| 1908.15 | 77.03 | 0.00 | 71.5 | 0.140E+01 | 0.18 | 160.54 | 0.18 | 0.00 | .25008E+06 |
| 1932.50 | 77.03 | 0.00 | 71.5 | 0.140E+01 | 0.18 | 160.54 | 0.18 | 0.00 | .25327E+06 |
| 1956.84 | 77.03 | 0.00 | 71.5 | 0.140E+01 | 0.18 | 160.54 | 0.18 | 0.00 | .25646E+06 |
| 1981.19 | 77.03 | 0.00 | 71.5 | 0.140E+01 | 0.18 | 160.54 | 0.18 | 0.00 | .25965E+06 |
| 2005.53 | 77.03 | 0.00 | 71.5 | 0.140E+01 | 0.18 | 160.54 | 0.18 | 0.00 | .26284E+06 |
| 2029.88 | 77.03 | 0.00 | 71.5 | 0.140E+01 | 0.18 | 160.54 | 0.18 | 0.00 | .26603E+06 |
| 2054.22 | 77.03 | 0.00 | 71.5 | 0.140E+01 | 0.18 | 160.54 | 0.18 | 0.00 | .26922E+06 |
| 2078.57 | 77.03 | 0.00 | 71.5 | 0.140E+01 | 0.18 | 160.54 | 0.18 | 0.00 | .27241E+06 |
| 2102.91 | 77.03 | 0.00 | 71.6 | 0.140E+01 | 0.18 | 160.54 | 0.18 | 0.00 | .27560E+06 |
| 2127.26 | 77.03 | 0.00 | 71.6 | 0.140E+01 | 0.18 | 160.54 | 0.18 | 0.00 | .27879E+06 |
| 2151.60 | 77.03 | 0.00 | 71.6 | 0.140E+01 | 0.18 | 160.54 | 0.18 | 0.00 | .28199E+06 |
| 2175.95 | 77.03 | 0.00 | 71.6 | 0.140E+01 | 0.18 | 160.54 | 0.18 | 0.00 | .28518E+06 |
| 2200.29 | 77.03 | 0.00 | 71.6 | 0.140E+01 | 0.18 | 160.54 | 0.18 | 0.00 | .28837E+06 |
| 2224.64 | 77.03 | 0.00 | 71.6 | 0.140E+01 | 0.18 | 160.54 | 0.18 | 0.00 | .29156E+06 |
| 2248.98 | 77.03 | 0.00 | 71.6 | 0.140E+01 | 0.18 | 160.54 | 0.18 | 0.00 | .29475E+06 |
| 2273.33 | 77.03 | 0.00 | 71.6 | 0.140E+01 | 0.18 | 160.54 | 0.18 | 0.00 | .29794E+06 |
| 2297.67 | 77.03 | 0.00 | 71.6 | 0.140E+01 | 0.18 | 160.54 | 0.18 | 0.00 | .30113E+06 |
| 2322.02 | 77.03 | 0.00 | 71.6 | 0.140E+01 | 0.18 | 160.54 | 0.18 | 0.00 | .30432E+06 |
| 2346.36 | 77.03 | 0.00 | 71.6 | 0.140E+01 | 0.18 | 160.54 | 0.18 | 0.00 | .30751E+06 |
| 2370.71 | 77.03 | 0.00 | 71.6 | 0.140E+01 | 0.18 | 160.54 | 0.18 | 0.00 | .31070E+06 |
| 2395.05 | 77.03 | 0.00 | 71.7 | 0.140E+01 | 0.18 | 160.54 | 0.18 | 0.00 | .31389E+06 |
| 2419.40 | 77.03 | 0.00 | 71.7 | 0.140E+01 | 0.18 | 160.54 | 0.18 | 0.00 | .31708E+06 |
| 2443.75 | 77.03 | 0.00 | 71.7 | 0.140E+01 | 0.18 | 160.54 | 0.18 | 0.00 | .32027E+06 |
| 2468.09 | 77.03 | 0.00 | 71.7 | 0.140E+01 | 0.18 | 160.54 | 0.18 | 0.00 | .32346E+06 |
| 2492.44 | 77.03 | 0.00 | 71.7 | 0.139E+01 | 0.18 | 160.54 | 0.18 | 0.00 | .32666E+06 |
| 2516.78 | 77.03 | 0.00 | 71.7 | 0.139E+01 | 0.18 | 160.54 | 0.18 | 0.00 | .32985E+06 |
| 2541.13 | 77.03 | 0.00 | 71.7 | 0.139E+01 | 0.18 | 160.54 | 0.18 | 0.00 | .33304E+06 |
| 2565.47 | 77.03 | 0.00 | 71.7 | 0.139E+01 | 0.18 | 160.54 | 0.18 | 0.00 | .33623E+06 |
| 2589.82 | 77.03 | 0.00 | 71.7 | 0.139E+01 | 0.18 | 160.54 | 0.18 | 0.00 | .33942E+06 |
| 2614.16 | 77.03 | 0.00 | 71.7 | 0.139E+01 | 0.18 | 160.54 | 0.18 | 0.00 | .34261E+06 |
| 2638.51 | 77.03 | 0.00 | 71.7 | 0.139E+01 | 0.18 | 160.54 | 0.18 | 0.00 | .34580E+06 |
| 2662.85 | 77.03 | 0.00 | 71.7 | 0.139E+01 | 0.18 | 160.54 | 0.18 | 0.00 | .34899E+06 |
| 2687.20 | 77.03 | 0.00 | 71.8 | 0.139E+01 | 0.18 | 160.54 | 0.18 | 0.00 | .35218E+06 |
| 2711.54 | 77.03 | 0.00 | 71.8 | 0.139E+01 | 0.18 | 160.54 | 0.18 | 0.00 | .35537E+06 |
| 2735.89 | 77.03 | 0.00 | 71.8 | 0.139E+01 | 0.18 | 160.54 | 0.18 | 0.00 | .35856E+06 |
| 2760.23 | 77.03 | 0.00 | 71.8 | 0.139E+01 | 0.18 | 160.54 | 0.18 | 0.00 | .36175E+06 |
| 2784.58 | 77.03 | 0.00 | 71.8 | 0.139E+01 | 0.18 | 160.54 | 0.18 | 0.00 | .36494E+06 |
| 2808.92 | 77.03 | 0.00 | 71.8 | 0.139E+01 | 0.18 | 160.54 | 0.18 | 0.00 | .36813E+06 |
| 2833.27 | 77.03 | 0.00 | 71.8 | 0.139E+01 | 0.18 | 160.54 | 0.18 | 0.00 | .37133E+06 |
| 2857.61 | 77.03 | 0.00 | 71.8 | 0.139E+01 | 0.18 | 160.54 | 0.18 | 0.00 | .37452E+06 |
| 2881.96 | 77.03 | 0.00 | 71.8 | 0.139E+01 | 0.18 | 160.54 | 0.18 | 0.00 | .37771E+06 |
| 2906.30 | 77.03 | 0.00 | 71.8 | 0.139E+01 | 0.18 | 160.54 | 0.18 | 0.00 | .38090E+06 |
| 2930.65 | 77.03 | 0.00 | 71.8 | 0.139E+01 | 0.18 | 160.54 | 0.18 | 0.00 | .38409E+06 |
| 2954.99 | 77.03 | 0.00 | 71.8 | 0.139E+01 | 0.18 | 160.54 | 0.18 | 0.00 | .38728E+06 |
| 2979.34 | 77.03 | 0.00 | 71.9 | 0.139E+01 | 0.18 | 160.54 | 0.18 | 0.00 | .39047E+06 |
| 3003.69 | 77.03 | 0.00 | 71.9 | 0.139E+01 | 0.18 | 160.54 | 0.18 | 0.00 | .39366E+06 |
| 3028.03 | 77.03 | 0.00 | 71.9 | 0.139E+01 | 0.18 | 160.54 | 0.18 | 0.00 | .39685E+06 |
| 3052.38 | 77.03 | 0.00 | 71.9 | 0.139E+01 | 0.18 | 160.54 | 0.18 | 0.00 | .40004E+06 |
| 3076.72 | 77.03 | 0.00 | 71.9 | 0.139E+01 | 0.18 | 160.54 | 0.18 | 0.00 | .40323E+06 |
| 3101.07 | 77.03 | 0.00 | 71.9 | 0.139E+01 | 0.18 | 160.54 | 0.18 | 0.00 | .40642E+06 |

| | | | | | | | | | |
|---|---|---|---|---|---|---|---|---|---|
| 3125.41 | 77.03 | 0.00 | 71.9 | 0.139E+01 | 0.18 | 160.54 | 0.18 | 0.00 | .40961E+06 |
| 3149.76 | 77.03 | 0.00 | 71.9 | 0.139E+01 | 0.18 | 160.54 | 0.18 | 0.00 | .41280E+06 |
| 3174.10 | 77.03 | 0.00 | 71.9 | 0.139E+01 | 0.18 | 160.54 | 0.18 | 0.00 | .41600E+06 |
| 3198.45 | 77.03 | 0.00 | 71.9 | 0.139E+01 | 0.18 | 160.54 | 0.18 | 0.00 | .41919E+06 |
| 3222.79 | 77.03 | 0.00 | 71.9 | 0.139E+01 | 0.18 | 160.54 | 0.18 | 0.00 | .42238E+06 |
| 3247.14 | 77.03 | 0.00 | 72.0 | 0.139E+01 | 0.18 | 160.54 | 0.18 | 0.00 | .42557E+06 |
| 3271.48 | 77.03 | 0.00 | 72.0 | 0.139E+01 | 0.18 | 160.54 | 0.18 | 0.00 | .42876E+06 |
| 3295.83 | 77.03 | 0.00 | 72.0 | 0.139E+01 | 0.18 | 160.54 | 0.18 | 0.00 | .43195E+06 |
| 3320.17 | 77.03 | 0.00 | 72.0 | 0.139E+01 | 0.18 | 160.54 | 0.18 | 0.00 | .43514E+06 |
| 3344.52 | 77.03 | 0.00 | 72.0 | 0.139E+01 | 0.18 | 160.54 | 0.18 | 0.00 | .43833E+06 |
| 3368.86 | 77.03 | 0.00 | 72.0 | 0.139E+01 | 0.18 | 160.54 | 0.18 | 0.00 | .44152E+06 |
| 3393.21 | 77.03 | 0.00 | 72.0 | 0.139E+01 | 0.18 | 160.54 | 0.18 | 0.00 | .44471E+06 |
| 3417.55 | 77.03 | 0.00 | 72.0 | 0.139E+01 | 0.18 | 160.54 | 0.18 | 0.00 | .44790E+06 |
| 3441.90 | 77.03 | 0.00 | 72.0 | 0.139E+01 | 0.18 | 160.54 | 0.18 | 0.00 | .45109E+06 |
| 3466.24 | 77.03 | 0.00 | 72.0 | 0.139E+01 | 0.18 | 160.54 | 0.18 | 0.00 | .45428E+06 |
| 3490.59 | 77.03 | 0.00 | 72.0 | 0.139E+01 | 0.18 | 160.54 | 0.18 | 0.00 | .45747E+06 |
| 3514.93 | 77.03 | 0.00 | 72.0 | 0.139E+01 | 0.18 | 160.54 | 0.18 | 0.00 | .46067E+06 |
| 3539.28 | 77.03 | 0.00 | 72.1 | 0.139E+01 | 0.18 | 160.54 | 0.18 | 0.00 | .46386E+06 |
| 3563.62 | 77.03 | 0.00 | 72.1 | 0.139E+01 | 0.18 | 160.54 | 0.18 | 0.00 | .46705E+06 |
| 3587.97 | 77.03 | 0.00 | 72.1 | 0.139E+01 | 0.18 | 160.54 | 0.18 | 0.00 | .47024E+06 |
| 3612.32 | 77.03 | 0.00 | 72.1 | 0.139E+01 | 0.18 | 160.54 | 0.18 | 0.00 | .47343E+06 |
| 3636.66 | 77.03 | 0.00 | 72.1 | 0.139E+01 | 0.18 | 160.54 | 0.18 | 0.00 | .47662E+06 |
| 3661.01 | 77.03 | 0.00 | 72.1 | 0.139E+01 | 0.18 | 160.54 | 0.18 | 0.00 | .47981E+06 |
| 3685.35 | 77.03 | 0.00 | 72.1 | 0.139E+01 | 0.18 | 160.54 | 0.18 | 0.00 | .48300E+06 |
| 3709.70 | 77.03 | 0.00 | 72.1 | 0.139E+01 | 0.18 | 160.54 | 0.18 | 0.00 | .48619E+06 |
| 3734.04 | 77.03 | 0.00 | 72.1 | 0.139E+01 | 0.18 | 160.54 | 0.18 | 0.00 | .48938E+06 |
| 3758.39 | 77.03 | 0.00 | 72.1 | 0.139E+01 | 0.18 | 160.54 | 0.18 | 0.00 | .49257E+06 |
| 3782.73 | 77.03 | 0.00 | 72.1 | 0.139E+01 | 0.18 | 160.54 | 0.18 | 0.00 | .49576E+06 |
| 3807.08 | 77.03 | 0.00 | 72.1 | 0.139E+01 | 0.18 | 160.54 | 0.18 | 0.00 | .49895E+06 |
| 3831.42 | 77.03 | 0.00 | 72.2 | 0.139E+01 | 0.18 | 160.54 | 0.18 | 0.00 | .50214E+06 |
| 3855.77 | 77.03 | 0.00 | 72.2 | 0.139E+01 | 0.18 | 160.54 | 0.18 | 0.00 | .50534E+06 |
| 3880.11 | 77.03 | 0.00 | 72.2 | 0.139E+01 | 0.18 | 160.54 | 0.18 | 0.00 | .50853E+06 |
| 3904.46 | 77.03 | 0.00 | 72.2 | 0.139E+01 | 0.18 | 160.54 | 0.18 | 0.00 | .51172E+06 |
| 3928.80 | 77.03 | 0.00 | 72.2 | 0.139E+01 | 0.18 | 160.54 | 0.18 | 0.00 | .51491E+06 |
| 3953.15 | 77.03 | 0.00 | 72.2 | 0.139E+01 | 0.18 | 160.54 | 0.18 | 0.00 | .51810E+06 |
| 3977.49 | 77.03 | 0.00 | 72.2 | 0.138E+01 | 0.18 | 160.54 | 0.18 | 0.00 | .52129E+06 |
| 4001.84 | 77.03 | 0.00 | 72.2 | 0.138E+01 | 0.18 | 160.54 | 0.18 | 0.00 | .52448E+06 |
| 4026.18 | 77.03 | 0.00 | 72.2 | 0.138E+01 | 0.18 | 160.54 | 0.18 | 0.00 | .52767E+06 |
| 4050.53 | 77.03 | 0.00 | 72.2 | 0.138E+01 | 0.18 | 160.54 | 0.18 | 0.00 | .53086E+06 |
| 4074.87 | 77.03 | 0.00 | 72.2 | 0.138E+01 | 0.18 | 160.54 | 0.18 | 0.00 | .53405E+06 |
| 4099.22 | 77.03 | 0.00 | 72.3 | 0.138E+01 | 0.18 | 160.54 | 0.18 | 0.00 | .53724E+06 |
| 4123.56 | 77.03 | 0.00 | 72.3 | 0.138E+01 | 0.18 | 160.54 | 0.18 | 0.00 | .54043E+06 |
| 4147.91 | 77.03 | 0.00 | 72.3 | 0.138E+01 | 0.18 | 160.54 | 0.18 | 0.00 | .54362E+06 |
| 4172.26 | 77.03 | 0.00 | 72.3 | 0.138E+01 | 0.18 | 160.54 | 0.18 | 0.00 | .54681E+06 |
| 4196.60 | 77.03 | 0.00 | 72.3 | 0.138E+01 | 0.18 | 160.54 | 0.18 | 0.00 | .55001E+06 |
| 4220.95 | 77.03 | 0.00 | 72.3 | 0.138E+01 | 0.18 | 160.54 | 0.18 | 0.00 | .55320E+06 |
| 4245.29 | 77.03 | 0.00 | 72.3 | 0.138E+01 | 0.18 | 160.54 | 0.18 | 0.00 | .55639E+06 |
| 4269.64 | 77.03 | 0.00 | 72.3 | 0.138E+01 | 0.18 | 160.54 | 0.18 | 0.00 | .55958E+06 |
| 4293.98 | 77.03 | 0.00 | 72.3 | 0.138E+01 | 0.18 | 160.54 | 0.18 | 0.00 | .56277E+06 |
| 4318.33 | 77.03 | 0.00 | 72.3 | 0.138E+01 | 0.18 | 160.54 | 0.18 | 0.00 | .56596E+06 |
| 4342.67 | 77.03 | 0.00 | 72.3 | 0.138E+01 | 0.18 | 160.54 | 0.18 | 0.00 | .56915E+06 |
| 4367.02 | 77.03 | 0.00 | 72.3 | 0.138E+01 | 0.18 | 160.54 | 0.18 | 0.00 | .57234E+06 |
| 4391.36 | 77.03 | 0.00 | 72.4 | 0.138E+01 | 0.18 | 160.54 | 0.18 | 0.00 | .57553E+06 |
| 4415.71 | 77.03 | 0.00 | 72.4 | 0.138E+01 | 0.18 | 160.54 | 0.18 | 0.00 | .57872E+06 |
| 4440.05 | 77.03 | 0.00 | 72.4 | 0.138E+01 | 0.18 | 160.54 | 0.18 | 0.00 | .58191E+06 |
| 4464.40 | 77.03 | 0.00 | 72.4 | 0.138E+01 | 0.18 | 160.54 | 0.18 | 0.00 | .58510E+06 |
| 4488.74 | 77.03 | 0.00 | 72.4 | 0.138E+01 | 0.18 | 160.54 | 0.18 | 0.00 | .58829E+06 |
| 4513.09 | 77.03 | 0.00 | 72.4 | 0.138E+01 | 0.18 | 160.54 | 0.18 | 0.00 | .59148E+06 |
| 4537.43 | 77.03 | 0.00 | 72.4 | 0.138E+01 | 0.18 | 160.54 | 0.18 | 0.00 | .59468E+06 |
| 4561.78 | 77.03 | 0.00 | 72.4 | 0.138E+01 | 0.18 | 160.54 | 0.18 | 0.00 | .59787E+06 |
| 4586.12 | 77.03 | 0.00 | 72.4 | 0.138E+01 | 0.18 | 160.54 | 0.18 | 0.00 | .60106E+06 |
| 4610.47 | 77.03 | 0.00 | 72.4 | 0.138E+01 | 0.18 | 160.54 | 0.18 | 0.00 | .60425E+06 |
| 4634.81 | 77.03 | 0.00 | 72.4 | 0.138E+01 | 0.18 | 160.54 | 0.18 | 0.00 | .60744E+06 |
| 4659.16 | 77.03 | 0.00 | 72.5 | 0.138E+01 | 0.18 | 160.54 | 0.18 | 0.00 | .61063E+06 |
| 4683.50 | 77.03 | 0.00 | 72.5 | 0.138E+01 | 0.18 | 160.54 | 0.18 | 0.00 | .61382E+06 |
| 4707.85 | 77.03 | 0.00 | 72.5 | 0.138E+01 | 0.18 | 160.54 | 0.18 | 0.00 | .61701E+06 |
| 4732.20 | 77.03 | 0.00 | 72.5 | 0.138E+01 | 0.18 | 160.54 | 0.18 | 0.00 | .62020E+06 |
| 4756.54 | 77.03 | 0.00 | 72.5 | 0.138E+01 | 0.18 | 160.54 | 0.18 | 0.00 | .62339E+06 |
| 4780.89 | 77.03 | 0.00 | 72.5 | 0.138E+01 | 0.18 | 160.54 | 0.18 | 0.00 | .62658E+06 |
| 4805.23 | 77.03 | 0.00 | 72.5 | 0.138E+01 | 0.18 | 160.54 | 0.18 | 0.00 | .62977E+06 |

```
  4829.58    77.03    0.00    72.5 0.138E+01   0.18   160.54    0.18    0.00   .63296E+06
  4853.92    77.03    0.00    72.5 0.138E+01   0.18   160.54    0.18    0.00   .63615E+06
  4878.27    77.03    0.00    72.5 0.138E+01   0.18   160.54    0.18    0.00   .63935E+06
  4902.61    77.03    0.00    72.5 0.138E+01   0.18   160.54    0.18    0.00   .64254E+06
  4926.96    77.03    0.00    72.5 0.138E+01   0.18   160.54    0.18    0.00   .64573E+06
  4951.30    77.03    0.00    72.6 0.138E+01   0.18   160.54    0.18    0.00   .64892E+06
  4975.65    77.03    0.00    72.6 0.138E+01   0.18   160.54    0.18    0.00   .65211E+06
  4999.99    77.03    0.00    72.6 0.138E+01   0.18   160.54    0.18    0.00   .65530E+06
 Cumulative travel time =      655299.7500 sec  (  182.03 hrs)

 Simulation limit based on maximum specified distance =   5000.00 m.
   This is the REGION OF INTEREST limitation.

END OF MOD261: PASSIVE AMBIENT MIXING IN UNIFORM AMBIENT
-----------------------------------------------------------------------------------------------------
-----------------------------------------------------------------------------------------------------
CORMIX2: Multiport Diffuser Discharges       End of Prediction File
2222222222222222222222222222222222222222222222222222222222222222222222222222222222222222222222222222
```

# CORMIX Data Input Form

## Project Legend

| | | | |
|---|---|---|---|
| Site Name: | PGP Operating, LLC - Maxwell Crossing - CMX1 | | |
| Design Case: | Avg. Effluent Data, Min. Ambient Data - As Built | | |
| Prepared By: | CFM Group | Date: | 5/9/2014 |

## Effluent Data

☑ **Non-Fresh Water Effluent Density**
Density $\rho_o$: 1005 kg/m$^3$

☐ **Fresh Water Effluent Density**
☐ Temperature $T_o$: °C ☐ Density $\rho_o$: kg/m$^3$

Discharge Excess Concentration: 100 %
☑ Effluent Flow Rate $Q_o$: 0.00026 m$^3$/s ☐ Effluent Velocity $U_o$: m/s

**Pollutant Types**

☑ Conservative ☐ Non Conservative: /day ☐ Heated - Heat Loss Coefficient W/m$^2$/°C

☐ **Brine** ☐ **Sediment:** Chunks % Sand % Coarse Silt % Clay %
Total Sediment Concentration: kg/m$^3$ Fine Silt %

## Ambient Geometry / Flow Field Data

**Average Depth $H_a$:** 4.88 m
**Depth at Discharge $H_d$:** 4.88 m

☐ **Unbounded**
☑ **Bounded:** Width: 160.55 m
Appearance: ☐ Uniform ☐ Slight Meander ☐ Highly Irregular

☑ **Steady**
☑ Ambient Flowrate $Q_a$: 5.975 m$^3$/s
☐ Ambient Velocity $U_a$: m/s

☐ **Unsteady**
Period hr Max Velocity m/s Tidal Velocity at this time $U_a$: m/s
☐ At Time: hr ☐ At Slack - ΔTime: hr ☐ At Time: hr After Slack

☐ **Single Slope**
Slope S: %
Near Shore Velocity m/s
Near Shore Darcy-Weisbach f

☐ **Near and Far Slope**
☐ Near Shore Slope $S_1$: % ☐ Far Slope $S_2$: %
☐ Near Shore Velocity $U_{a1}$: m/s ☐ Far Shore Velocity $U_{a2}$: m/s
☐ Near Shore Darcy-Weisbach $f_1$: ☐ Far Shore Darcy-Weisbach $f_2$:
☐ Breakpoint: m

☑ Manning's n: 0.032 Wind Speed: 2.0 m/s

## Ambient Density Data

☑ **Uniform** ☑ **Fresh Water:** ☑ Temperature 32.2 °C ☐ Density $\rho_a$: kg/m$^3$ ☐ **Non Fresh:** Density $\rho_a$: kg/m$^3$
☐ **Stratified** ☐ **Type A** ☐ **Type B**: Pycnocline Height m ☐ **Type C**: Pycnocline Height m Jump kg/m$^3$/°C
☐ **Brine and Sediment Only** Density ρ: At Surface $\rho_{as}$: kg/m$^3$/°C At Bottom $\rho_{ab}$: kg/m$^3$/°C
Level 1 Density $\rho_1$: kg/m$^3$/°C Sub 1: m Level 2 Density $\rho_2$: kg/m$^3$/°C Sub 2: m

## Discharge Geometry Data

### CORMIX 1 - Single Port

Nearest Bank: ☑ Left ☐ Right
Distance to Nearest Bank 47.16 m
Verticle angle $\theta_0$: 90 °
Horizontal Angle $\sigma_0$: - °
☐ Port Diameter $D_0$: 0.0508 m
☐ Port Area $A_0$: m$^2$

**Submerged**
Port Height above bottom $h_0$: 0.9144 m

**Above Surface**
Port Height above surface: m
☐ Jet - Like ☐ Spray
☐ Area
Deflector Plate:
☐ Without ☐ With

### CORMIX 2 - Multiport

Nearest Bank: ☑ Left ☐ Right
Orientation:
☐ Unidirectional ☐ Staged
☑ Alternating / Vertical
Number of Openings: 12 Diffuser Length: 65.87 m
Distance to 1st end point $YB_1$: 47.16 m
Distance to 2nd end point $YB_2$: 106.90 m
Port Height $h_0$: 0.9144 m Port Diameter $D_0$: 0.0508 m
Contraction Ratio 0.9

**Angles**
Vertical Angle θ: 90 ° Horizontal Angle σ: - °
Alignment Angle γ: 115 °
Relative Orientation Angle β: 90 °
Nozzel Direction:
☑ Same ☐ Fanned Out

### CORMIX 3 - Surface Discharge

Discharge Located: ☐ Left ☐ Right
Horizontal Angle σ: °
Local Depth at Discharge Outlet: m
☐ **Flush** ☐ **Co-flowing**
☐ **Protruding:**
Distance from Bank m

**Discharge Outlet**
☐ **Channel**
Width m
Depth $b_0$: m
☐ **Pipe** Diameter $D_0$: m
Bottom Invert Depth m
Local Bottom Slope at Channel Entry
°

## Mixing Zone Data Inputs

☑ **Non -Toxic effluent**
☑ Water Qualtity Standard: ☐ Chronic 175.7 mg/L ☑ Acute 805.7 mg/L ☐ No Water Quality Standard
☐ **Toxic effluent**
Criterion Continuous Concentration: Criterion Maximum Concentration:

☑ **Maximum Mixing Zone Boundaries**
☐ Trajectory: m ☑ Distance Downstream: 401.37 m ☑ Width: 80.27 m
☑ Area: 195.74 m$^2$
Region of Interest: 5000 m
Number of Output Steps 200

Prepared By:
**CFM Group** Civil and Environmental Engineers, Scientists, Planners, and Surveyors

# CORMIX Data Output Form

## Project Legend

| | | | |
|---|---|---|---|
| Site Name: | PGP Operating, LLC - Maxwell Crossing - CMX1 | | |
| Design Case: | Avg. Effluent Data, Min. Ambient Data - As Built | | |
| Prepared By: | CFM Group | Date: | 5/9/2014 |

## Mixing Zone Data Inputs

☑ **Non -Toxic effluent**

☑ Water Qualtity Standard: ☐ Chronic 175.7 mg/L ☑ Acute 805.7 mg/L ☐ No Water Quality Standard

☐ **Toxic effluent**

Criterion Continuous Concentration Criterion Maximum Concentration

☑ **Maximum Mixing Zone Boundaries**

☐ Trajectory: m ☑ Distance Downstream: 401.37 m ☑ Width: 80.27 m

☑ Area: 195.74 $m^2$

Region of Interest: 5000 m

Number of Output Steps 25

## Mixing Zone Data Outputs - From CMX2

| RMZ Summary | Plume Location Downstream | | Pollutant Concentration | | Half-Width of Plume | |
|---|---|---|---|---|---|---|
| Width Criteria | 24.84 | m | 3.82% | | 40.14 | m |
| Area Criteria | - | m | - | | | m |
| Length Criteria | | m | | | | m |
| ☐ Chronic WQS | | m | | mg/L | | m |
| ☑ Acute WQS | 0.16 | m | 805.7 | mg/L | 29.95 | m |

## Zone of Initial Dilution Data Outputs - CMX1

| ZID Summary | Distance Downstream | | Pollutant Concentration | | Pollutant Concentration | |
|---|---|---|---|---|---|---|
| Discharge Length Scale Criteria | 2.25 | m | 545.49 | mg/L | 4.676% | † |
| Water Depth Criteria | 24.38 | m | | mg/L | | † |
| Leading Edge of MZ Criteria | 2.48 | m | | mg/L | | † |

Discharge Excess Concentration: 11665.7 mg/L

Acute WQS Percentage of Effluent: 6.907 %* @ 0.16 m

ZID Limits Percentage of Effluent: 4.676 %* @ 2.25 m

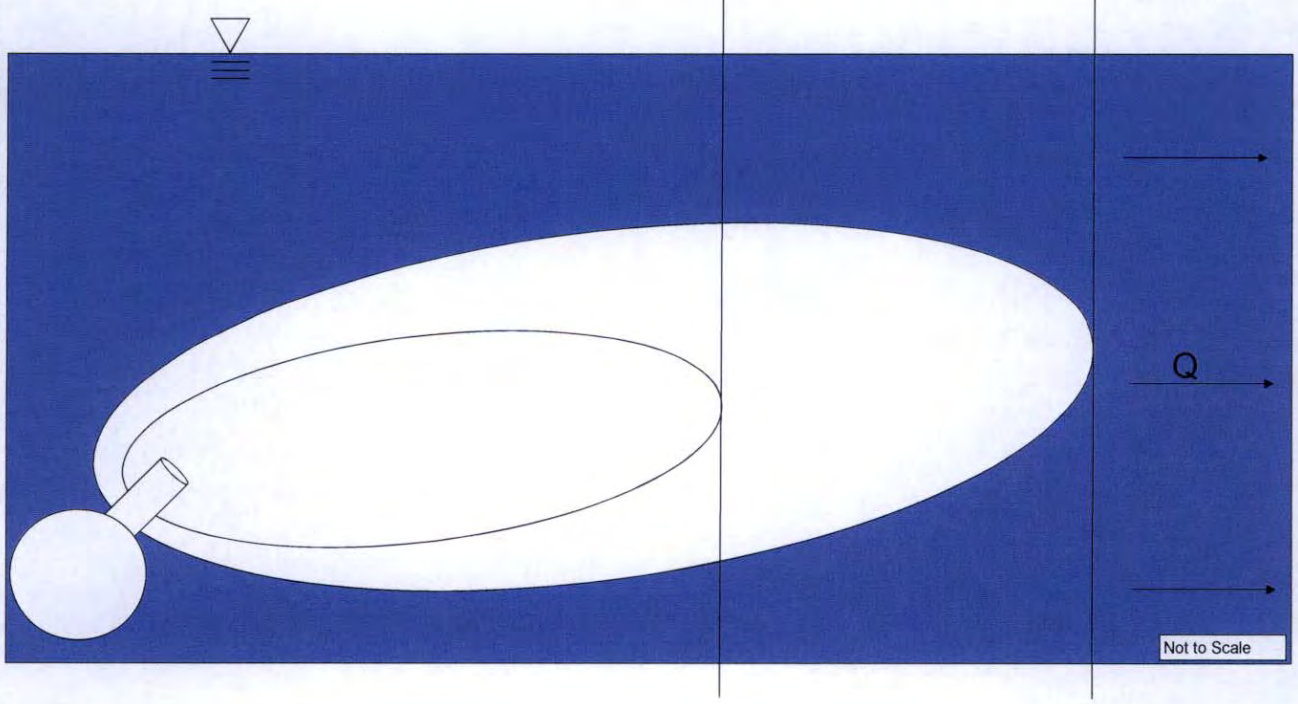


Yellow highlighted values are inputs by user, gray values are calculated by spreadsheet.
†Percentage of effluent as determined by CORMIX.
*Percentage of effluent is calculated, not from CORMIX.

Prepared By:
CFM Group
Civil and Environmental Engineers, Scientists, Planners, and Surveyors

```
CORMIX1 SESSION REPORT:
XXXXXXXXXXXXXXXXXXXXXXXXXXXXXXXXXXXXXXXXXXXXXXXXXXXXXXXXXXXXXXXXXXXXXXXXXXXX
                      CORMIX MIXING ZONE EXPERT SYSTEM
                          CORMIX Version 8.0GT
                       HYDRO1:Version-8.0.0.0  April,2012
SITE NAME/LABEL:                Energen Resources -  Maxwell Crossing
  DESIGN CASE:                  Avg. Effluent Data, Min Ambient Data - As Built CMX1
  FILE NAME:                    P:\Client Files\Energen\2012138 - CORMIX\CORMIX Model Files\Maxwell
Crossing\Maxwell Crossing - CMX1.prd
  Using subsystem CORMIX1:     Single Port Discharges
  Start of session:             07/03/2013--10:29:27
***************************************************************************
SUMMARY OF INPUT DATA:
---------------------------------------------------------------------------
AMBIENT PARAMETERS:
  Cross-section                          = bounded
  Width                          BS      = 160.55 m
  Channel regularity             ICHREG  = 3
  Ambient flowrate               QA      = 5.97 m^3/s
  Average depth                  HA      = 4.88 m
  Depth at discharge             HD      = 4.88 m
  Ambient velocity               UA      = 0.0076 m/s
  Darcy-Weisbach friction factor F       = 0.0474
    Calculated from Manning's n          = 0.032
  Wind velocity                  UW      = 2 m/s
  Stratification Type            STRCND  = U
  Surface temperature                    = 32.22 degC
  Bottom temperature                     = 32.22 degC
  Calculated FRESH-WATER DENSITY values:
  Surface density                RHOAS   = 994.9541 kg/m^3
  Bottom density                 RHOAB   = 994.9541 kg/m^3
---------------------------------------------------------------------------
DISCHARGE PARAMETERS:            Single Port Discharge
  Nearest bank                           = left
  Distance to bank               DISTB   = 47.16 m
  Port diameter                  D0      = 0.0508 m
  Port cross-sectional area      A0      = 0.0020 m^2
  Discharge velocity             U0      = 0.13 m/s
  Discharge flowrate             Q0      = 0.00026 m^3/s
  Discharge port height          H0      = 0.91 m
  Vertical discharge angle       THETA   = 90 deg
  Horizontal discharge angle     SIGMA   = 0 deg
  Discharge density              RHO0    = 1005 kg/m^3
  Density difference             DRHO    = -10.0459 kg/m^3
  Buoyant acceleration           GP0     = -0.099 m/s^2
  Discharge concentration        C0      = 100 %
  Surface heat exchange coeff.   KS      = 0 m/s
  Coefficient of decay           KD      = 0 /s
---------------------------------------------------------------------------
DISCHARGE/ENVIRONMENT LENGTH SCALES:
  LQ  = 0.05 m         Lm  = 0.76 m         Lb  = 58.05 m
  LM  = 0.09 m         Lm' = 99999 m         Lb' = 99999 m
---------------------------------------------------------------------------
NON-DIMENSIONAL PARAMETERS:
  Port densimetric Froude number FR0     = 1.81
  Velocity ratio                 R       = 16.82
---------------------------------------------------------------------------
MIXING ZONE / TOXIC DILUTION ZONE / AREA OF INTEREST PARAMETERS:
  Toxic discharge                        = no
  Water quality standard specified       = no
  Regulatory mixing zone                 = yes
  Regulatory mixing zone specification   = distance
  Regulatory mixing zone value           = 2.25 m (m^2 if area)
  Region of interest                     = 5000 m
***************************************************************************
HYDRODYNAMIC CLASSIFICATION:
  *-----------------------*
  | FLOW CLASS   = NV2 |
  *-----------------------*
  This flow configuration applies to a layer corresponding to the full water
```

```
  depth at the discharge site.
  Applicable layer depth = water depth = 4.88 m
*****************************************************************************
MIXING ZONE EVALUATION (hydrodynamic and regulatory summary):

-----------------------------------------------------------------------------
X-Y-Z Coordinate system:
  Origin is located at the bottom below the port center:
    47.16 m from the left bank/shore.
  Number of display steps NSTEP = 200 per module.
-----------------------------------------------------------------------------
NEAR-FIELD REGION (NFR) CONDITIONS :
Note: The NFR is the zone of strong initial mixing.  It has no regulatory
  implication.  However, this information may be useful for the discharge
  designer because the mixing in the NFR is usually sensitive to the
  discharge design conditions.
  Pollutant concentration at NFR edge  c = 2.2137 %
  Dilution at edge of NFR              s = 45.2
  NFR Location:                        x = 7.10 m
    (centerline coordinates)           y = 0 m
                                       z = 0 m
  NFR plume dimensions:  half-width (bh) = 14.00 m
                          thickness (bv) = 0.06 m
Cumulative travel time:       925.1388 sec.
-----------------------------------------------------------------------------
Buoyancy assessment:
  The effluent density is greater than the surrounding ambient water
  density at the discharge level.
  Therefore, the effluent is NEGATIVELY BUOYANT and will tend to sink towards
  the bottom.
IMPORTANT NOTE:
Since the effluent is NEGATIVELY BUOYANT, it is STRONGLY recommended that you consider using the
Brine or Sediment options for Effluent specification for a more detailed analysis.

CORMIX will however continue with the current simulation.
-----------------------------------------------------------------------------
UPSTREAM INTRUSION SUMMARY:
Plume exhibits upstream intrusion due to low ambient velocity or strong
  discharge buoyancy.
  Intrusion length                       =  12.95 m
  Intrusion stagnation point             =  -12.85 m
  Intrusion thickness                    =  0.03 m
  Intrusion half width at impingement    =  14.00 m
  Intrusion half thickness at impingement =  0.06 m
-----------------------------------------------------------------------------
FAR-FIELD MIXING SUMMARY:
  Plume becomes vertically fully mixed at 541.77 m downstream
  and laterally fully mixed at 450.79 m downstream.
-----------------------------------------------------------------------------
PLUME BANK CONTACT SUMMARY:
  Plume in bounded section contacts nearest bank at 133.17 m downstream.
  Plume contacts second bank at 450.79 m downstream.
************************ TOXIC DILUTION ZONE SUMMARY ************************
No TDZ was specified for this simulation.
********************** REGULATORY MIXING ZONE SUMMARY **********************
The plume conditions at the boundary of the specified RMZ are as follows:
  Pollutant concentration              c = 4.673214  %
  Corresponding dilution               s = 23.6
  Plume location:                      x = 2.25 m
    (centerline coordinates)           y = 0 m
                                       z = 0 m
  Plume dimensions:      half-width (bh) = 12.18 m
                          thickness (bv) = 0.04 m
Cumulative travel time < 925.1388 sec. (RMZ is within NFR)

Note:
Plume concentration c and dilution s values are reported based on prediction
file values - assuming linear interpolation between predicted points just
before and just after the RMZ boundary has been detected.
```

Please ensure a small step size is used in the prediction file to account for this linear interpolation. Step size can be controlled by increasing (reduces the prediction step size) or decreasing (increases the prediction step size) the - Output Steps per Module - in CORMIX input.

---

Regulatory Mixing Zone Analysis:
The RMZ specification occurs before the near-field mixing regime (NFR) has been completed. The specification of the RMZ is highly restrictive.

********** FINAL DESIGN ADVICE AND COMMENTS **********

REMINDER: The user must take note that HYDRODYNAMIC MODELING by any known technique is NOT AN EXACT SCIENCE.

Extensive comparison with field and laboratory data has shown that the CORMIX predictions on dilutions and concentrations (with associated plume geometries) are reliable for the majority of cases and are accurate to within about +-50% (standard deviation).

As a further safeguard, CORMIX will not give predictions whenever it judges the design configuration as highly complex and uncertain for prediction.

```
CORMIX1 PREDICTION FILE:
11111111111111111111111111111111111111111111111111111111111111111111111111111111111111111111111111
                        CORMIX MIXING ZONE EXPERT SYSTEM
                    Subsystem CORMIX1: Single Port Discharges
                              CORMIX Version 8.0GT
                      HYDRO1 Version 8.0.0.0 April 2012
-----------------------------------------------------------------------------------------------
-----------------------------------------------------------------------------------------------
CASE DESCRIPTION
 Site name/label:   Energen Resources -  Maxwell Crossing
 Design case:       Avg. Effluent Data, Min Ambient Data - As Built CMX1
 FILE NAME:         P:\...iles\Maxwell Crossing\Maxwell Crossing - CMX1.prd
 Time stamp:        Wed Jul  3 10:29:27 2013

ENVIRONMENT PARAMETERS (metric units)
 Bounded section
 BS     =    160.55  AS     =    783.48  QA     =      5.97  ICHREG= 3
 HA     =      4.88  HD     =      4.88
 UA     =     0.008  F      =     0.047 USTAR =0.5869E-03
 UW     =     2.000 UWSTAR=0.2198E-02
 Uniform density environment
 STRCND=  U         RHOAM =  994.9541

DISCHARGE PARAMETERS (metric units)
 BANK  =  LEFT      DISTB =     47.16
 D0     =     0.051 A0     =     0.002 H0     =      0.91  SUB0  =      3.97
 THETA =     90.00  SIGMA =      0.00
 U0     =     0.128 Q0     =     0.000       =0.2600E-03
 RHO0   = 1005.0000  DRHO0 =-.1005E+02  GP0    =-.9902E-01
 C0     =0.1000E+03  CUNITS=  %
 IPOLL =  1         KS     =0.0000E+00  KD     =0.0000E+00

FLUX VARIABLES (metric units)
 Q0     =0.2600E-03  M0     =0.3335E-04  J0     =-.2574E-04  SIGNJ0=     -1.0
 Associated length scales (meters)
 LQ     =      0.05  LM     =      0.09  Lm     =      0.76  Lb     =     58.05
                                         Lmp    =  99999.00  Lbp    =  99999.00

NON-DIMENSIONAL PARAMETERS
 FR0    =      1.81  R      =     16.82

FLOW CLASSIFICATION
 1111111111111111111111111111111111111111
 1  Flow class (CORMIX1)       =    NV2    1
 1  Applicable layer depth HS =     4.88  1
 1111111111111111111111111111111111111111

MIXING ZONE / TOXIC DILUTION / REGION OF INTEREST PARAMETERS
 C0     =0.1000E+03  CUNITS=  %
 NTOX   =  0
 NSTD   =  0
 REGMZ  =  1
 REGSPC=  1         XREG   =      2.25  WREG   =      0.00  AREG   =      0.00
 XINT   =   5000.00  XMAX   =   5000.00

X-Y-Z COORDINATE SYSTEM:
    ORIGIN is located at the bottom and below the center of the port:
        47.16 m  from the LEFT  bank/shore.
    X-axis points downstream, Y-axis points to left, Z-axis points upward.
NSTEP = 200 display intervals per module
-----------------------------------------------------------------------------------------------
-----------------------------------------------------------------------------------------------
BEGIN MOD101: DISCHARGE MODULE

       X        Y        Z        S        C        B        Uc        TT
      0.00     0.00     0.91      1.0 0.100E+03    0.03    0.128   .00000E+00

END OF MOD101: DISCHARGE MODULE
-----------------------------------------------------------------------------------------------
-----------------------------------------------------------------------------------------------
```

BEGIN CORJET (MOD110): JET/PLUME NEAR-FIELD MIXING REGION

Jet/plume transition motion in weak crossflow.

Zone of flow establishment: THETAE= 88.59 SIGMAE= 0.00
LE = 0.11 XE = 0.00 YE = 0.00 ZE = 1.03

Profile definitions:
B = Gaussian 1/e (37%) half-width, normal to trajectory
S = hydrodynamic centerline dilution
C = centerline concentration (includes reaction effects, if any)
Uc = Local centerline excess velocity (above ambient)
TT = Cumulative travel time

| X | Y | Z | S | C | B | Uc | TT |
|---|---|---|---|---|---|---|---|
| 0.00 | 0.00 | 0.91 | 1.0 | 0.100E+03 | 0.03 | 0.128 | .00000E+00 |
| 0.00 | 0.00 | 1.03 | 1.0 | 0.100E+03 | 0.03 | 0.128 | .29796E-01 |
| 0.00 | 0.00 | 1.03 | 1.0 | 0.100E+03 | 0.03 | 0.128 | .62089E-01 |
| 0.00 | 0.00 | 1.04 | 1.0 | 0.100E+03 | 0.03 | 0.128 | .97459E-01 |
| 0.00 | 0.00 | 1.04 | 1.0 | 0.100E+03 | 0.03 | 0.127 | .13676E+00 |
| 0.00 | 0.00 | 1.05 | 1.0 | 0.100E+03 | 0.03 | 0.112 | .18135E+00 |
| 0.00 | 0.00 | 1.05 | 1.0 | 0.100E+03 | 0.04 | 0.096 | .23365E+00 |
| 0.00 | 0.00 | 1.06 | 1.0 | 0.100E+03 | 0.04 | 0.076 | .29888E+00 |
| 0.00 | 0.00 | 1.06 | 1.0 | 0.100E+03 | 0.05 | 0.052 | .39381E+00 |
| 0.00 | 0.00 | 1.07 | 1.1 | 0.913E+02 | 0.10 | 0.004 | .99318E+00 |
| 0.00 | 0.00 | 1.07 | 1.0 | 0.100E+03 | 0.03 | 0.116 | .10364E+01 |
| Maximum jet height has been reached. | | | | | | | |
| 0.01 | 0.00 | 1.07 | 1.0 | 0.100E+03 | 0.04 | 0.085 | .10948E+01 |
| 0.01 | 0.00 | 1.06 | 1.0 | 0.994E+02 | 0.04 | 0.099 | .11451E+01 |
| 0.01 | 0.00 | 1.06 | 1.0 | 0.978E+02 | 0.04 | 0.111 | .11902E+01 |
| 0.01 | 0.00 | 1.05 | 1.0 | 0.961E+02 | 0.03 | 0.121 | .12317E+01 |
| 0.01 | 0.00 | 1.05 | 1.1 | 0.943E+02 | 0.03 | 0.128 | .12704E+01 |
| 0.01 | 0.00 | 1.04 | 1.1 | 0.926E+02 | 0.03 | 0.128 | .13070E+01 |
| 0.01 | 0.00 | 1.04 | 1.1 | 0.908E+02 | 0.03 | 0.128 | .13420E+01 |
| 0.01 | 0.00 | 1.03 | 1.1 | 0.890E+02 | 0.03 | 0.128 | .13756E+01 |
| 0.01 | 0.00 | 1.03 | 1.1 | 0.871E+02 | 0.03 | 0.128 | .14081E+01 |
| 0.01 | 0.00 | 1.02 | 1.2 | 0.853E+02 | 0.03 | 0.128 | .14396E+01 |
| 0.01 | 0.00 | 1.02 | 1.2 | 0.835E+02 | 0.03 | 0.128 | .14704E+01 |
| 0.01 | 0.00 | 1.01 | 1.2 | 0.817E+02 | 0.03 | 0.128 | .15005E+01 |
| 0.01 | 0.00 | 1.01 | 1.3 | 0.800E+02 | 0.03 | 0.128 | .15301E+01 |
| 0.01 | 0.00 | 1.00 | 1.3 | 0.782E+02 | 0.03 | 0.128 | .15592E+01 |
| 0.01 | 0.00 | 1.00 | 1.3 | 0.765E+02 | 0.03 | 0.128 | .15878E+01 |
| 0.01 | 0.00 | 0.99 | 1.3 | 0.748E+02 | 0.03 | 0.128 | .16162E+01 |
| 0.01 | 0.00 | 0.99 | 1.4 | 0.731E+02 | 0.03 | 0.128 | .16442E+01 |
| 0.01 | 0.00 | 0.98 | 1.4 | 0.715E+02 | 0.03 | 0.128 | .16719E+01 |
| 0.01 | 0.00 | 0.98 | 1.4 | 0.699E+02 | 0.03 | 0.128 | .16995E+01 |
| 0.01 | 0.00 | 0.97 | 1.5 | 0.684E+02 | 0.03 | 0.128 | .17268E+01 |
| 0.01 | 0.00 | 0.97 | 1.5 | 0.668E+02 | 0.03 | 0.128 | .17540E+01 |
| 0.01 | 0.00 | 0.96 | 1.5 | 0.654E+02 | 0.03 | 0.128 | .17810E+01 |
| 0.01 | 0.00 | 0.96 | 1.6 | 0.639E+02 | 0.03 | 0.128 | .18079E+01 |
| 0.01 | 0.00 | 0.95 | 1.6 | 0.625E+02 | 0.03 | 0.128 | .18348E+01 |
| 0.01 | 0.00 | 0.95 | 1.6 | 0.611E+02 | 0.03 | 0.128 | .18615E+01 |
| 0.01 | 0.00 | 0.94 | 1.7 | 0.598E+02 | 0.04 | 0.128 | .18882E+01 |
| 0.01 | 0.00 | 0.94 | 1.7 | 0.585E+02 | 0.04 | 0.128 | .19148E+01 |
| 0.01 | 0.00 | 0.93 | 1.7 | 0.572E+02 | 0.04 | 0.128 | .19414E+01 |
| 0.02 | 0.00 | 0.93 | 1.8 | 0.560E+02 | 0.04 | 0.128 | .19680E+01 |
| 0.02 | 0.00 | 0.92 | 1.8 | 0.548E+02 | 0.04 | 0.128 | .19946E+01 |
| 0.02 | 0.00 | 0.92 | 1.9 | 0.537E+02 | 0.04 | 0.128 | .20211E+01 |
| 0.02 | 0.00 | 0.91 | 1.9 | 0.525E+02 | 0.04 | 0.128 | .20477E+01 |
| 0.02 | 0.00 | 0.91 | 1.9 | 0.514E+02 | 0.04 | 0.128 | .20743E+01 |
| 0.02 | 0.00 | 0.90 | 2.0 | 0.504E+02 | 0.04 | 0.128 | .21008E+01 |
| 0.02 | 0.00 | 0.90 | 2.0 | 0.493E+02 | 0.04 | 0.128 | .21275E+01 |
| 0.02 | 0.00 | 0.89 | 2.1 | 0.483E+02 | 0.04 | 0.128 | .21541E+01 |
| 0.02 | 0.00 | 0.89 | 2.1 | 0.473E+02 | 0.04 | 0.128 | .21807E+01 |
| 0.02 | 0.00 | 0.88 | 2.2 | 0.464E+02 | 0.04 | 0.128 | .22074E+01 |
| 0.02 | 0.00 | 0.88 | 2.2 | 0.455E+02 | 0.04 | 0.128 | .22342E+01 |
| 0.02 | 0.00 | 0.87 | 2.2 | 0.446E+02 | 0.04 | 0.128 | .22610E+01 |
| 0.02 | 0.00 | 0.87 | 2.3 | 0.437E+02 | 0.04 | 0.128 | .22878E+01 |
| 0.02 | 0.00 | 0.86 | 2.3 | 0.429E+02 | 0.04 | 0.128 | .23147E+01 |
| 0.02 | 0.00 | 0.86 | 2.4 | 0.420E+02 | 0.04 | 0.128 | .23416E+01 |

| | | | | | | | |
|---|---|---|---|---|---|---|---|
| 0.02 | 0.00 | 0.85 | 2.4 | 0.412E+02 | 0.04 | 0.128 | .23686E+01 |
| 0.02 | 0.00 | 0.85 | 2.5 | 0.405E+02 | 0.04 | 0.128 | .23956E+01 |
| 0.02 | 0.00 | 0.84 | 2.5 | 0.397E+02 | 0.04 | 0.128 | .24227E+01 |
| 0.02 | 0.00 | 0.84 | 2.6 | 0.390E+02 | 0.04 | 0.128 | .24499E+01 |
| 0.02 | 0.00 | 0.83 | 2.6 | 0.383E+02 | 0.04 | 0.128 | .24771E+01 |
| 0.02 | 0.00 | 0.83 | 2.7 | 0.376E+02 | 0.04 | 0.128 | .25044E+01 |
| 0.02 | 0.00 | 0.82 | 2.7 | 0.369E+02 | 0.05 | 0.128 | .25318E+01 |
| 0.02 | 0.00 | 0.82 | 2.8 | 0.362E+02 | 0.05 | 0.128 | .25592E+01 |
| 0.02 | 0.00 | 0.81 | 2.8 | 0.356E+02 | 0.05 | 0.128 | .25867E+01 |
| 0.02 | 0.00 | 0.81 | 2.9 | 0.350E+02 | 0.05 | 0.128 | .26143E+01 |
| 0.02 | 0.00 | 0.80 | 2.9 | 0.344E+02 | 0.05 | 0.128 | .26419E+01 |
| 0.02 | 0.00 | 0.80 | 3.0 | 0.338E+02 | 0.05 | 0.128 | .26696E+01 |
| 0.02 | 0.00 | 0.79 | 3.0 | 0.332E+02 | 0.05 | 0.128 | .26974E+01 |
| 0.03 | 0.00 | 0.79 | 3.1 | 0.326E+02 | 0.05 | 0.128 | .27252E+01 |
| 0.03 | 0.00 | 0.78 | 3.1 | 0.321E+02 | 0.05 | 0.128 | .27532E+01 |
| 0.03 | 0.00 | 0.78 | 3.2 | 0.316E+02 | 0.05 | 0.128 | .27812E+01 |
| 0.03 | 0.00 | 0.77 | 3.2 | 0.310E+02 | 0.05 | 0.128 | .28092E+01 |
| 0.03 | 0.00 | 0.77 | 3.3 | 0.305E+02 | 0.05 | 0.128 | .28374E+01 |
| 0.03 | 0.00 | 0.76 | 3.3 | 0.300E+02 | 0.05 | 0.128 | .28656E+01 |
| 0.03 | 0.00 | 0.76 | 3.4 | 0.296E+02 | 0.05 | 0.128 | .28939E+01 |
| 0.03 | 0.00 | 0.75 | 3.4 | 0.291E+02 | 0.05 | 0.128 | .29223E+01 |
| 0.03 | 0.00 | 0.75 | 3.5 | 0.286E+02 | 0.05 | 0.128 | .29507E+01 |
| 0.03 | 0.00 | 0.74 | 3.5 | 0.282E+02 | 0.05 | 0.128 | .29792E+01 |
| 0.03 | 0.00 | 0.74 | 3.6 | 0.278E+02 | 0.05 | 0.128 | .30079E+01 |
| 0.03 | 0.00 | 0.73 | 3.7 | 0.273E+02 | 0.05 | 0.128 | .30365E+01 |
| 0.03 | 0.00 | 0.73 | 3.7 | 0.269E+02 | 0.05 | 0.128 | .30653E+01 |
| 0.03 | 0.00 | 0.72 | 3.8 | 0.265E+02 | 0.05 | 0.128 | .30941E+01 |
| 0.03 | 0.00 | 0.72 | 3.8 | 0.261E+02 | 0.06 | 0.128 | .31230E+01 |
| 0.03 | 0.00 | 0.71 | 3.9 | 0.257E+02 | 0.06 | 0.128 | .31520E+01 |
| 0.03 | 0.00 | 0.71 | 3.9 | 0.253E+02 | 0.06 | 0.128 | .31811E+01 |
| 0.03 | 0.00 | 0.70 | 4.0 | 0.250E+02 | 0.06 | 0.128 | .32102E+01 |
| 0.03 | 0.00 | 0.70 | 4.1 | 0.246E+02 | 0.06 | 0.128 | .32394E+01 |
| 0.03 | 0.00 | 0.69 | 4.1 | 0.243E+02 | 0.06 | 0.128 | .32687E+01 |
| 0.03 | 0.00 | 0.69 | 4.2 | 0.239E+02 | 0.06 | 0.128 | .32981E+01 |
| 0.03 | 0.00 | 0.68 | 4.2 | 0.236E+02 | 0.06 | 0.128 | .33275E+01 |
| 0.03 | 0.00 | 0.68 | 4.3 | 0.232E+02 | 0.06 | 0.128 | .33571E+01 |
| 0.03 | 0.00 | 0.67 | 4.4 | 0.229E+02 | 0.06 | 0.128 | .33867E+01 |
| 0.04 | 0.00 | 0.67 | 4.4 | 0.226E+02 | 0.06 | 0.128 | .34163E+01 |
| 0.04 | 0.00 | 0.66 | 4.5 | 0.223E+02 | 0.06 | 0.128 | .34461E+01 |
| 0.04 | 0.00 | 0.66 | 4.5 | 0.220E+02 | 0.06 | 0.128 | .34759E+01 |
| 0.04 | 0.00 | 0.65 | 4.6 | 0.217E+02 | 0.06 | 0.128 | .35058E+01 |
| 0.04 | 0.00 | 0.65 | 4.7 | 0.214E+02 | 0.06 | 0.128 | .35358E+01 |
| 0.04 | 0.00 | 0.64 | 4.7 | 0.211E+02 | 0.06 | 0.128 | .35658E+01 |
| 0.04 | 0.00 | 0.64 | 4.8 | 0.208E+02 | 0.06 | 0.128 | .35960E+01 |
| 0.04 | 0.00 | 0.63 | 4.9 | 0.206E+02 | 0.06 | 0.128 | .36262E+01 |
| 0.04 | 0.00 | 0.63 | 4.9 | 0.203E+02 | 0.06 | 0.128 | .36564E+01 |
| 0.04 | 0.00 | 0.62 | 5.0 | 0.200E+02 | 0.06 | 0.128 | .36868E+01 |
| 0.04 | 0.00 | 0.62 | 5.1 | 0.198E+02 | 0.07 | 0.128 | .37172E+01 |
| 0.04 | 0.00 | 0.61 | 5.1 | 0.195E+02 | 0.07 | 0.128 | .37477E+01 |
| 0.04 | 0.00 | 0.61 | 5.2 | 0.193E+02 | 0.07 | 0.128 | .37783E+01 |
| 0.04 | 0.00 | 0.60 | 5.2 | 0.191E+02 | 0.07 | 0.128 | .38089E+01 |
| 0.04 | 0.00 | 0.60 | 5.3 | 0.188E+02 | 0.07 | 0.128 | .38397E+01 |
| 0.04 | 0.00 | 0.59 | 5.4 | 0.186E+02 | 0.07 | 0.128 | .38705E+01 |
| 0.04 | 0.00 | 0.59 | 5.4 | 0.184E+02 | 0.07 | 0.128 | .39013E+01 |
| 0.04 | 0.00 | 0.58 | 5.5 | 0.181E+02 | 0.07 | 0.128 | .39323E+01 |
| 0.04 | 0.00 | 0.58 | 5.6 | 0.179E+02 | 0.07 | 0.128 | .39633E+01 |
| 0.04 | 0.00 | 0.57 | 5.6 | 0.177E+02 | 0.07 | 0.128 | .39944E+01 |
| 0.04 | 0.00 | 0.57 | 5.7 | 0.175E+02 | 0.07 | 0.128 | .40255E+01 |
| 0.05 | 0.00 | 0.56 | 5.8 | 0.173E+02 | 0.07 | 0.128 | .40568E+01 |
| 0.05 | 0.00 | 0.56 | 5.9 | 0.171E+02 | 0.07 | 0.128 | .40881E+01 |
| 0.05 | 0.00 | 0.55 | 5.9 | 0.169E+02 | 0.07 | 0.128 | .41195E+01 |
| 0.05 | 0.00 | 0.55 | 6.0 | 0.167E+02 | 0.07 | 0.128 | .41509E+01 |
| 0.05 | 0.00 | 0.54 | 6.1 | 0.165E+02 | 0.07 | 0.128 | .41824E+01 |
| 0.05 | 0.00 | 0.54 | 6.1 | 0.163E+02 | 0.07 | 0.128 | .42140E+01 |
| 0.05 | 0.00 | 0.53 | 6.2 | 0.161E+02 | 0.07 | 0.128 | .42457E+01 |
| 0.05 | 0.00 | 0.53 | 6.3 | 0.159E+02 | 0.07 | 0.128 | .42774E+01 |
| 0.05 | 0.00 | 0.52 | 6.3 | 0.158E+02 | 0.07 | 0.128 | .43092E+01 |
| 0.05 | 0.00 | 0.52 | 6.4 | 0.156E+02 | 0.08 | 0.128 | .43411E+01 |
| 0.05 | 0.00 | 0.51 | 6.5 | 0.154E+02 | 0.08 | 0.128 | .43730E+01 |
| 0.05 | 0.00 | 0.51 | 6.6 | 0.152E+02 | 0.08 | 0.128 | .44050E+01 |

| | | | | | | | |
|---|---|---|---|---|---|---|---|
| 0.05 | 0.00 | 0.50 | 6.6 | 0.151E+02 | 0.08 | 0.128 | .44371E+01 |
| 0.05 | 0.00 | 0.50 | 6.7 | 0.149E+02 | 0.08 | 0.128 | .44693E+01 |
| 0.05 | 0.00 | 0.49 | 6.8 | 0.148E+02 | 0.08 | 0.128 | .45015E+01 |
| 0.05 | 0.00 | 0.49 | 6.9 | 0.146E+02 | 0.08 | 0.128 | .45338E+01 |
| 0.05 | 0.00 | 0.48 | 6.9 | 0.144E+02 | 0.08 | 0.128 | .45661E+01 |
| 0.05 | 0.00 | 0.48 | 7.0 | 0.143E+02 | 0.08 | 0.128 | .45985E+01 |
| 0.05 | 0.00 | 0.47 | 7.1 | 0.141E+02 | 0.08 | 0.128 | .46310E+01 |
| 0.05 | 0.00 | 0.47 | 7.1 | 0.140E+02 | 0.08 | 0.128 | .46636E+01 |
| 0.06 | 0.00 | 0.46 | 7.2 | 0.138E+02 | 0.08 | 0.128 | .46962E+01 |
| 0.06 | 0.00 | 0.46 | 7.3 | 0.137E+02 | 0.08 | 0.128 | .47289E+01 |
| 0.06 | 0.00 | 0.45 | 7.4 | 0.136E+02 | 0.08 | 0.128 | .47617E+01 |
| 0.06 | 0.00 | 0.45 | 7.4 | 0.134E+02 | 0.08 | 0.128 | .47945E+01 |
| 0.06 | 0.00 | 0.44 | 7.5 | 0.133E+02 | 0.08 | 0.128 | .48274E+01 |
| 0.06 | 0.00 | 0.44 | 7.6 | 0.132E+02 | 0.08 | 0.128 | .48604E+01 |
| 0.06 | 0.00 | 0.43 | 7.7 | 0.130E+02 | 0.08 | 0.128 | .48934E+01 |
| 0.06 | 0.00 | 0.43 | 7.8 | 0.129E+02 | 0.08 | 0.128 | .49265E+01 |
| 0.06 | 0.00 | 0.42 | 7.8 | 0.128E+02 | 0.08 | 0.128 | .49596E+01 |
| 0.06 | 0.00 | 0.42 | 7.9 | 0.126E+02 | 0.09 | 0.128 | .49929E+01 |
| 0.06 | 0.00 | 0.41 | 8.0 | 0.125E+02 | 0.09 | 0.128 | .50262E+01 |
| 0.06 | 0.00 | 0.41 | 8.1 | 0.124E+02 | 0.09 | 0.128 | .50595E+01 |
| 0.06 | 0.00 | 0.40 | 8.1 | 0.123E+02 | 0.09 | 0.128 | .50929E+01 |
| 0.06 | 0.00 | 0.40 | 8.2 | 0.122E+02 | 0.09 | 0.128 | .51264E+01 |
| 0.06 | 0.00 | 0.39 | 8.3 | 0.120E+02 | 0.09 | 0.128 | .51600E+01 |
| 0.06 | 0.00 | 0.39 | 8.4 | 0.119E+02 | 0.09 | 0.128 | .51936E+01 |
| 0.06 | 0.00 | 0.38 | 8.5 | 0.118E+02 | 0.09 | 0.128 | .52273E+01 |
| 0.06 | 0.00 | 0.38 | 8.5 | 0.117E+02 | 0.09 | 0.128 | .52610E+01 |
| 0.07 | 0.00 | 0.37 | 8.6 | 0.116E+02 | 0.09 | 0.128 | .52948E+01 |
| 0.07 | 0.00 | 0.37 | 8.7 | 0.115E+02 | 0.09 | 0.128 | .53287E+01 |
| 0.07 | 0.00 | 0.36 | 8.8 | 0.114E+02 | 0.09 | 0.128 | .53626E+01 |
| 0.07 | 0.00 | 0.36 | 8.9 | 0.113E+02 | 0.09 | 0.128 | .53966E+01 |
| 0.07 | 0.00 | 0.35 | 9.0 | 0.112E+02 | 0.09 | 0.128 | .54307E+01 |
| 0.07 | 0.00 | 0.35 | 9.0 | 0.111E+02 | 0.09 | 0.128 | .54648E+01 |
| 0.07 | 0.00 | 0.34 | 9.1 | 0.110E+02 | 0.09 | 0.128 | .54990E+01 |
| 0.07 | 0.00 | 0.34 | 9.2 | 0.109E+02 | 0.09 | 0.128 | .55332E+01 |
| 0.07 | 0.00 | 0.33 | 9.3 | 0.108E+02 | 0.09 | 0.128 | .55675E+01 |
| 0.07 | 0.00 | 0.33 | 9.4 | 0.107E+02 | 0.09 | 0.128 | .56019E+01 |
| 0.07 | 0.00 | 0.32 | 9.4 | 0.106E+02 | 0.09 | 0.128 | .56364E+01 |
| 0.07 | 0.00 | 0.32 | 9.5 | 0.105E+02 | 0.10 | 0.128 | .56709E+01 |
| 0.07 | 0.00 | 0.31 | 9.6 | 0.104E+02 | 0.10 | 0.128 | .57054E+01 |
| 0.07 | 0.00 | 0.31 | 9.7 | 0.103E+02 | 0.10 | 0.128 | .57400E+01 |
| 0.07 | 0.00 | 0.30 | 9.8 | 0.102E+02 | 0.10 | 0.128 | .57747E+01 |
| 0.07 | 0.00 | 0.30 | 9.9 | 0.101E+02 | 0.10 | 0.128 | .58094E+01 |
| 0.07 | 0.00 | 0.29 | 10.0 | 0.100E+02 | 0.10 | 0.128 | .58442E+01 |
| 0.07 | 0.00 | 0.29 | 10.0 | 0.996E+01 | 0.10 | 0.128 | .58791E+01 |
| 0.08 | 0.00 | 0.28 | 10.1 | 0.987E+01 | 0.10 | 0.128 | .59140E+01 |
| 0.08 | 0.00 | 0.28 | 10.2 | 0.979E+01 | 0.10 | 0.128 | .59490E+01 |
| 0.08 | 0.00 | 0.27 | 10.3 | 0.971E+01 | 0.10 | 0.128 | .59841E+01 |
| 0.08 | 0.00 | 0.27 | 10.4 | 0.963E+01 | 0.10 | 0.128 | .60192E+01 |
| 0.08 | 0.00 | 0.26 | 10.5 | 0.955E+01 | 0.10 | 0.128 | .60543E+01 |
| 0.08 | 0.00 | 0.26 | 10.6 | 0.947E+01 | 0.10 | 0.128 | .60895E+01 |
| 0.08 | 0.00 | 0.25 | 10.7 | 0.939E+01 | 0.10 | 0.128 | .61248E+01 |
| 0.08 | 0.00 | 0.25 | 10.7 | 0.931E+01 | 0.10 | 0.128 | .61602E+01 |
| 0.08 | 0.00 | 0.24 | 10.8 | 0.923E+01 | 0.10 | 0.128 | .61955E+01 |
| 0.08 | 0.00 | 0.24 | 10.9 | 0.916E+01 | 0.10 | 0.128 | .62310E+01 |
| 0.08 | 0.00 | 0.23 | 11.0 | 0.909E+01 | 0.10 | 0.128 | .62665E+01 |
| 0.08 | 0.00 | 0.23 | 11.1 | 0.901E+01 | 0.10 | 0.128 | .63021E+01 |
| 0.08 | 0.00 | 0.22 | 11.2 | 0.894E+01 | 0.11 | 0.128 | .63377E+01 |
| 0.08 | 0.00 | 0.22 | 11.3 | 0.887E+01 | 0.11 | 0.128 | .63734E+01 |
| 0.08 | 0.00 | 0.21 | 11.4 | 0.880E+01 | 0.11 | 0.128 | .64092E+01 |
| 0.08 | 0.00 | 0.21 | 11.5 | 0.873E+01 | 0.11 | 0.128 | .64450E+01 |
| 0.08 | 0.00 | 0.20 | 11.5 | 0.866E+01 | 0.11 | 0.128 | .64808E+01 |
| 0.09 | 0.00 | 0.20 | 11.6 | 0.859E+01 | 0.11 | 0.128 | .65167E+01 |
| 0.09 | 0.00 | 0.19 | 11.7 | 0.852E+01 | 0.11 | 0.128 | .65527E+01 |
| 0.09 | 0.00 | 0.19 | 11.8 | 0.846E+01 | 0.11 | 0.128 | .65888E+01 |
| 0.09 | 0.00 | 0.18 | 11.9 | 0.839E+01 | 0.11 | 0.128 | .66249E+01 |
| 0.09 | 0.00 | 0.18 | 12.0 | 0.833E+01 | 0.11 | 0.128 | .66610E+01 |
| 0.09 | 0.00 | 0.17 | 12.1 | 0.826E+01 | 0.11 | 0.128 | .66972E+01 |
| 0.09 | 0.00 | 0.17 | 12.2 | 0.820E+01 | 0.11 | 0.128 | .67335E+01 |
| 0.09 | 0.00 | 0.16 | 12.3 | 0.814E+01 | 0.11 | 0.128 | .67698E+01 |
| 0.09 | 0.00 | 0.16 | 12.4 | 0.808E+01 | 0.11 | 0.128 | .68062E+01 |

```
     0.09     0.00     0.15    12.5 0.802E+01   0.11    0.128   .68426E+01
     0.09     0.00     0.15    12.6 0.796E+01   0.11    0.128   .68791E+01
     0.09     0.00     0.14    12.7 0.790E+01   0.11    0.128   .69156E+01
     0.09     0.00     0.14    12.8 0.784E+01   0.11    0.128   .69522E+01
     0.09     0.00     0.13    12.9 0.778E+01   0.11    0.128   .69889E+01
     0.09     0.00     0.13    12.9 0.772E+01   0.11    0.128   .70256E+01
     0.09     0.00     0.12    13.0 0.767E+01   0.12    0.128   .70623E+01
 Cumulative travel time =          7.0623 sec  (    0.00 hrs)

END OF CORJET (MOD110): JET/PLUME NEAR-FIELD MIXING REGION
-----------------------------------------------------------------------------------------
-----------------------------------------------------------------------------------------
BEGIN MOD132: LAYER BOUNDARY IMPINGEMENT/UPSTREAM SPREADING

  Vertical angle of layer/boundary impingement    =     -82.91 deg
  Horizontal angle of layer/boundary impingement  =       0.00 deg

 UPSTREAM INTRUSION PROPERTIES:
        Upstream intrusion length                =      12.95 m
        X-position of upstream stagnation point =     -12.85 m
        Thickness in intrusion region            =       0.03 m
        Half-width at downstream end             =      14.00 m
        Thickness at downstream end              =       0.05 m

  Control volume inflow:
       X        Y        Z        S        C        B        TT
     0.09     0.00     0.12    13.0 0.767E+01   0.12 .70623E+01

 Profile definitions:
   BV = top-hat thickness, measured vertically
   BH = top-hat half-width, measured horizontally in Y-direction
   ZU = upper plume boundary (Z-coordinate)
   ZL = lower plume boundary (Z-coordinate)
   S  = hydrodynamic average (bulk) dilution
   C  = average (bulk) concentration (includes reaction effects, if any)
   TT = Cumulative travel time

       X        Y        Z        S        C       BV       BH       ZU       ZL       TT
   -12.85     0.00     0.00   9999.9 0.000E+00   0.00     0.00     0.00     0.00 .92514E+03
   -12.45     0.00     0.00     59.3 0.169E+01   0.01     1.98     0.01     0.00 .70623E+01
   -10.50     0.00     0.00     24.6 0.407E+01   0.01     4.81     0.01     0.00 .70623E+01
    -8.54     0.00     0.00     18.5 0.541E+01   0.02     6.51     0.02     0.00 .70623E+01
    -6.59     0.00     0.00     15.7 0.636E+01   0.02     7.85     0.02     0.00 .70623E+01
    -4.63     0.00     0.00     14.2 0.702E+01   0.02     8.99     0.02     0.00 .70623E+01
    -2.68     0.00     0.00     13.4 0.745E+01   0.03    10.00     0.03     0.00 .70623E+01
    -0.72     0.00     0.00     13.1 0.765E+01   0.03    10.92     0.03     0.00 .70623E+01
     1.23     0.00     0.00     16.2 0.618E+01   0.03    11.77     0.03     0.00 .15445E+03
 ** REGULATORY MIXING ZONE BOUNDARY is within the Near-Field Region **
 In this prediction interval the plume DOWNSTREAM  distance meets or exceeds
 the regulatory value =      2.25 m.
 This is the extent of the REGULATORY MIXING ZONE.
     3.19     0.00     0.00     30.4 0.329E+01   0.04    12.56     0.04     0.00 .41134E+03
     5.14     0.00     0.00     41.1 0.243E+01   0.05    13.30     0.05     0.00 .66824E+03
     7.10     0.00     0.00     45.2 0.221E+01   0.05    14.00     0.05     0.00 .92514E+03
 Cumulative travel time =        925.1385 sec  (    0.26 hrs)

END OF MOD132: LAYER BOUNDARY IMPINGEMENT/UPSTREAM SPREADING
-----------------------------------------------------------------------------------------
** End of NEAR-FIELD REGION (NFR) **
-----------------------------------------------------------------------------------------
BEGIN MOD141: BUOYANT AMBIENT SPREADING

 Profile definitions:
   BV = top-hat thickness, measured vertically
   BH = top-hat half-width, measured horizontally in Y-direction
   ZU = upper plume boundary (Z-coordinate)
   ZL = lower plume boundary (Z-coordinate)
   S  = hydrodynamic average (bulk) dilution
   C  = average (bulk) concentration (includes reaction effects, if any)
   TT = Cumulative travel time
```

Plume Stage 1 (not bank attached):

| X | Y | Z | S | C | BV | BH | ZU | ZL | TT |
|---|---|---|---|---|---|---|---|---|---|
| 7.10 | 0.00 | 0.00 | 45.2 | 0.221E+01 | 0.05 | 14.00 | 0.05 | 0.00 | .92514E+03 |
| 7.73 | 0.00 | 0.00 | 46.7 | 0.214E+01 | 0.06 | 14.18 | 0.06 | 0.00 | .10078E+04 |
| 8.36 | 0.00 | 0.00 | 48.3 | 0.207E+01 | 0.06 | 14.35 | 0.06 | 0.00 | .10904E+04 |
| 8.99 | 0.00 | 0.00 | 50.0 | 0.200E+01 | 0.06 | 14.53 | 0.06 | 0.00 | .11731E+04 |
| 9.62 | 0.00 | 0.00 | 51.7 | 0.194E+01 | 0.06 | 14.71 | 0.06 | 0.00 | .12558E+04 |
| 10.25 | 0.00 | 0.00 | 53.4 | 0.187E+01 | 0.06 | 14.88 | 0.06 | 0.00 | .13384E+04 |
| 10.88 | 0.00 | 0.00 | 55.2 | 0.181E+01 | 0.06 | 15.05 | 0.06 | 0.00 | .14211E+04 |
| 11.51 | 0.00 | 0.00 | 57.0 | 0.176E+01 | 0.06 | 15.23 | 0.06 | 0.00 | .15037E+04 |
| 12.14 | 0.00 | 0.00 | 58.8 | 0.170E+01 | 0.07 | 15.40 | 0.07 | 0.00 | .15864E+04 |
| 12.77 | 0.00 | 0.00 | 60.7 | 0.165E+01 | 0.07 | 15.58 | 0.07 | 0.00 | .16690E+04 |
| 13.40 | 0.00 | 0.00 | 62.6 | 0.160E+01 | 0.07 | 15.75 | 0.07 | 0.00 | .17517E+04 |
| 14.03 | 0.00 | 0.00 | 64.6 | 0.155E+01 | 0.07 | 15.92 | 0.07 | 0.00 | .18343E+04 |
| 14.66 | 0.00 | 0.00 | 66.6 | 0.150E+01 | 0.07 | 16.10 | 0.07 | 0.00 | .19170E+04 |
| 15.29 | 0.00 | 0.00 | 68.7 | 0.146E+01 | 0.07 | 16.27 | 0.07 | 0.00 | .19997E+04 |
| 15.92 | 0.00 | 0.00 | 70.8 | 0.141E+01 | 0.07 | 16.44 | 0.07 | 0.00 | .20823E+04 |
| 16.55 | 0.00 | 0.00 | 72.9 | 0.137E+01 | 0.07 | 16.62 | 0.07 | 0.00 | .21650E+04 |
| 17.18 | 0.00 | 0.00 | 75.1 | 0.133E+01 | 0.08 | 16.79 | 0.08 | 0.00 | .22476E+04 |
| 17.81 | 0.00 | 0.00 | 77.3 | 0.129E+01 | 0.08 | 16.96 | 0.08 | 0.00 | .23303E+04 |
| 18.44 | 0.00 | 0.00 | 79.6 | 0.126E+01 | 0.08 | 17.13 | 0.08 | 0.00 | .24129E+04 |
| 19.07 | 0.00 | 0.00 | 81.9 | 0.122E+01 | 0.08 | 17.30 | 0.08 | 0.00 | .24956E+04 |
| 19.70 | 0.00 | 0.00 | 84.3 | 0.119E+01 | 0.08 | 17.47 | 0.08 | 0.00 | .25782E+04 |
| 20.33 | 0.00 | 0.00 | 86.7 | 0.115E+01 | 0.08 | 17.65 | 0.08 | 0.00 | .26609E+04 |
| 20.96 | 0.00 | 0.00 | 89.2 | 0.112E+01 | 0.09 | 17.82 | 0.09 | 0.00 | .27435E+04 |
| 21.59 | 0.00 | 0.00 | 91.7 | 0.109E+01 | 0.09 | 17.99 | 0.09 | 0.00 | .28262E+04 |
| 22.22 | 0.00 | 0.00 | 94.2 | 0.106E+01 | 0.09 | 18.16 | 0.09 | 0.00 | .29089E+04 |
| 22.85 | 0.00 | 0.00 | 96.8 | 0.103E+01 | 0.09 | 18.33 | 0.09 | 0.00 | .29915E+04 |
| 23.49 | 0.00 | 0.00 | 99.5 | 0.101E+01 | 0.09 | 18.50 | 0.09 | 0.00 | .30742E+04 |
| 24.12 | 0.00 | 0.00 | 102.2 | 0.978E+00 | 0.09 | 18.67 | 0.09 | 0.00 | .31568E+04 |
| 24.75 | 0.00 | 0.00 | 105.0 | 0.953E+00 | 0.09 | 18.84 | 0.09 | 0.00 | .32395E+04 |
| 25.38 | 0.00 | 0.00 | 107.8 | 0.928E+00 | 0.10 | 19.01 | 0.10 | 0.00 | .33221E+04 |
| 26.01 | 0.00 | 0.00 | 110.6 | 0.904E+00 | 0.10 | 19.18 | 0.10 | 0.00 | .34048E+04 |
| 26.64 | 0.00 | 0.00 | 113.5 | 0.881E+00 | 0.10 | 19.35 | 0.10 | 0.00 | .34874E+04 |
| 27.27 | 0.00 | 0.00 | 116.5 | 0.858E+00 | 0.10 | 19.52 | 0.10 | 0.00 | .35701E+04 |
| 27.90 | 0.00 | 0.00 | 119.5 | 0.837E+00 | 0.10 | 19.69 | 0.10 | 0.00 | .36527E+04 |
| 28.53 | 0.00 | 0.00 | 122.6 | 0.816E+00 | 0.11 | 19.86 | 0.11 | 0.00 | .37354E+04 |
| 29.16 | 0.00 | 0.00 | 125.7 | 0.796E+00 | 0.11 | 20.03 | 0.11 | 0.00 | .38181E+04 |
| 29.79 | 0.00 | 0.00 | 128.8 | 0.776E+00 | 0.11 | 20.20 | 0.11 | 0.00 | .39007E+04 |
| 30.42 | 0.00 | 0.00 | 132.1 | 0.757E+00 | 0.11 | 20.37 | 0.11 | 0.00 | .39834E+04 |
| 31.05 | 0.00 | 0.00 | 135.3 | 0.739E+00 | 0.11 | 20.54 | 0.11 | 0.00 | .40660E+04 |
| 31.68 | 0.00 | 0.00 | 138.7 | 0.721E+00 | 0.11 | 20.71 | 0.11 | 0.00 | .41487E+04 |
| 32.31 | 0.00 | 0.00 | 142.0 | 0.704E+00 | 0.12 | 20.88 | 0.12 | 0.00 | .42313E+04 |
| 32.94 | 0.00 | 0.00 | 145.5 | 0.687E+00 | 0.12 | 21.05 | 0.12 | 0.00 | .43140E+04 |
| 33.57 | 0.00 | 0.00 | 149.0 | 0.671E+00 | 0.12 | 21.22 | 0.12 | 0.00 | .43966E+04 |
| 34.20 | 0.00 | 0.00 | 152.5 | 0.656E+00 | 0.12 | 21.39 | 0.12 | 0.00 | .44793E+04 |
| 34.83 | 0.00 | 0.00 | 156.1 | 0.641E+00 | 0.12 | 21.56 | 0.12 | 0.00 | .45619E+04 |
| 35.46 | 0.00 | 0.00 | 159.8 | 0.626E+00 | 0.13 | 21.72 | 0.13 | 0.00 | .46446E+04 |
| 36.09 | 0.00 | 0.00 | 163.5 | 0.612E+00 | 0.13 | 21.89 | 0.13 | 0.00 | .47273E+04 |
| 36.72 | 0.00 | 0.00 | 167.3 | 0.598E+00 | 0.13 | 22.06 | 0.13 | 0.00 | .48099E+04 |
| 37.35 | 0.00 | 0.00 | 171.1 | 0.584E+00 | 0.13 | 22.23 | 0.13 | 0.00 | .48926E+04 |
| 37.98 | 0.00 | 0.00 | 175.0 | 0.571E+00 | 0.13 | 22.40 | 0.13 | 0.00 | .49752E+04 |
| 38.61 | 0.00 | 0.00 | 178.9 | 0.559E+00 | 0.14 | 22.57 | 0.14 | 0.00 | .50579E+04 |
| 39.24 | 0.00 | 0.00 | 183.0 | 0.547E+00 | 0.14 | 22.73 | 0.14 | 0.00 | .51405E+04 |
| 39.87 | 0.00 | 0.00 | 187.0 | 0.535E+00 | 0.14 | 22.90 | 0.14 | 0.00 | .52232E+04 |
| 40.50 | 0.00 | 0.00 | 191.2 | 0.523E+00 | 0.14 | 23.07 | 0.14 | 0.00 | .53058E+04 |
| 41.14 | 0.00 | 0.00 | 195.3 | 0.512E+00 | 0.14 | 23.24 | 0.14 | 0.00 | .53885E+04 |
| 41.77 | 0.00 | 0.00 | 199.6 | 0.501E+00 | 0.15 | 23.41 | 0.15 | 0.00 | .54711E+04 |
| 42.40 | 0.00 | 0.00 | 203.9 | 0.490E+00 | 0.15 | 23.57 | 0.15 | 0.00 | .55538E+04 |
| 43.03 | 0.00 | 0.00 | 208.3 | 0.480E+00 | 0.15 | 23.74 | 0.15 | 0.00 | .56365E+04 |
| 43.66 | 0.00 | 0.00 | 212.7 | 0.470E+00 | 0.15 | 23.91 | 0.15 | 0.00 | .57191E+04 |
| 44.29 | 0.00 | 0.00 | 217.2 | 0.460E+00 | 0.15 | 24.08 | 0.15 | 0.00 | .58018E+04 |
| 44.92 | 0.00 | 0.00 | 221.8 | 0.451E+00 | 0.16 | 24.25 | 0.16 | 0.00 | .58844E+04 |
| 45.55 | 0.00 | 0.00 | 226.4 | 0.442E+00 | 0.16 | 24.41 | 0.16 | 0.00 | .59671E+04 |
| 46.18 | 0.00 | 0.00 | 231.1 | 0.433E+00 | 0.16 | 24.58 | 0.16 | 0.00 | .60497E+04 |
| 46.81 | 0.00 | 0.00 | 235.8 | 0.424E+00 | 0.16 | 24.75 | 0.16 | 0.00 | .61324E+04 |
| 47.44 | 0.00 | 0.00 | 240.7 | 0.416E+00 | 0.16 | 24.92 | 0.16 | 0.00 | .62150E+04 |
| 48.07 | 0.00 | 0.00 | 245.5 | 0.407E+00 | 0.17 | 25.08 | 0.17 | 0.00 | .62977E+04 |
| 48.70 | 0.00 | 0.00 | 250.5 | 0.399E+00 | 0.17 | 25.25 | 0.17 | 0.00 | .63803E+04 |

| | | | | | | | | | |
|---|---|---|---|---|---|---|---|---|---|
| 49.33 | 0.00 | 0.00 | 255.5 | 0.391E+00 | 0.17 | 25.42 | 0.17 | 0.00 | .64630E+04 |
| 49.96 | 0.00 | 0.00 | 260.6 | 0.384E+00 | 0.17 | 25.58 | 0.17 | 0.00 | .65457E+04 |
| 50.59 | 0.00 | 0.00 | 265.7 | 0.376E+00 | 0.18 | 25.75 | 0.18 | 0.00 | .66283E+04 |
| 51.22 | 0.00 | 0.00 | 270.9 | 0.369E+00 | 0.18 | 25.92 | 0.18 | 0.00 | .67110E+04 |
| 51.85 | 0.00 | 0.00 | 276.2 | 0.362E+00 | 0.18 | 26.08 | 0.18 | 0.00 | .67936E+04 |
| 52.48 | 0.00 | 0.00 | 281.6 | 0.355E+00 | 0.18 | 26.25 | 0.18 | 0.00 | .68763E+04 |
| 53.11 | 0.00 | 0.00 | 287.0 | 0.348E+00 | 0.19 | 26.42 | 0.19 | 0.00 | .69589E+04 |
| 53.74 | 0.00 | 0.00 | 292.5 | 0.342E+00 | 0.19 | 26.58 | 0.19 | 0.00 | .70416E+04 |
| 54.37 | 0.00 | 0.00 | 298.0 | 0.336E+00 | 0.19 | 26.75 | 0.19 | 0.00 | .71242E+04 |
| 55.00 | 0.00 | 0.00 | 303.6 | 0.329E+00 | 0.19 | 26.92 | 0.19 | 0.00 | .72069E+04 |
| 55.63 | 0.00 | 0.00 | 309.3 | 0.323E+00 | 0.19 | 27.08 | 0.19 | 0.00 | .72895E+04 |
| 56.26 | 0.00 | 0.00 | 315.1 | 0.317E+00 | 0.20 | 27.25 | 0.20 | 0.00 | .73722E+04 |
| 56.89 | 0.00 | 0.00 | 320.9 | 0.312E+00 | 0.20 | 27.42 | 0.20 | 0.00 | .74549E+04 |
| 57.52 | 0.00 | 0.00 | 326.8 | 0.306E+00 | 0.20 | 27.58 | 0.20 | 0.00 | .75375E+04 |
| 58.15 | 0.00 | 0.00 | 332.8 | 0.300E+00 | 0.20 | 27.75 | 0.20 | 0.00 | .76202E+04 |
| 58.79 | 0.00 | 0.00 | 338.8 | 0.295E+00 | 0.21 | 27.92 | 0.21 | 0.00 | .77028E+04 |
| 59.42 | 0.00 | 0.00 | 345.0 | 0.290E+00 | 0.21 | 28.08 | 0.21 | 0.00 | .77855E+04 |
| 60.05 | 0.00 | 0.00 | 351.2 | 0.285E+00 | 0.21 | 28.25 | 0.21 | 0.00 | .78681E+04 |
| 60.68 | 0.00 | 0.00 | 357.4 | 0.280E+00 | 0.21 | 28.41 | 0.21 | 0.00 | .79508E+04 |
| 61.31 | 0.00 | 0.00 | 363.8 | 0.275E+00 | 0.22 | 28.58 | 0.22 | 0.00 | .80334E+04 |
| 61.94 | 0.00 | 0.00 | 370.2 | 0.270E+00 | 0.22 | 28.75 | 0.22 | 0.00 | .81161E+04 |
| 62.57 | 0.00 | 0.00 | 376.7 | 0.265E+00 | 0.22 | 28.91 | 0.22 | 0.00 | .81987E+04 |
| 63.20 | 0.00 | 0.00 | 383.2 | 0.261E+00 | 0.22 | 29.08 | 0.22 | 0.00 | .82814E+04 |
| 63.83 | 0.00 | 0.00 | 389.9 | 0.256E+00 | 0.23 | 29.24 | 0.23 | 0.00 | .83641E+04 |
| 64.46 | 0.00 | 0.00 | 396.6 | 0.252E+00 | 0.23 | 29.41 | 0.23 | 0.00 | .84467E+04 |
| 65.09 | 0.00 | 0.00 | 403.4 | 0.248E+00 | 0.23 | 29.57 | 0.23 | 0.00 | .85294E+04 |
| 65.72 | 0.00 | 0.00 | 410.2 | 0.244E+00 | 0.24 | 29.74 | 0.24 | 0.00 | .86120E+04 |
| 66.35 | 0.00 | 0.00 | 417.2 | 0.240E+00 | 0.24 | 29.90 | 0.24 | 0.00 | .86947E+04 |
| 66.98 | 0.00 | 0.00 | 424.2 | 0.236E+00 | 0.24 | 30.07 | 0.24 | 0.00 | .87773E+04 |
| 67.61 | 0.00 | 0.00 | 431.3 | 0.232E+00 | 0.24 | 30.24 | 0.24 | 0.00 | .88600E+04 |
| 68.24 | 0.00 | 0.00 | 438.5 | 0.228E+00 | 0.25 | 30.40 | 0.25 | 0.00 | .89426E+04 |
| 68.87 | 0.00 | 0.00 | 445.7 | 0.224E+00 | 0.25 | 30.57 | 0.25 | 0.00 | .90253E+04 |
| 69.50 | 0.00 | 0.00 | 453.1 | 0.221E+00 | 0.25 | 30.73 | 0.25 | 0.00 | .91079E+04 |
| 70.13 | 0.00 | 0.00 | 460.5 | 0.217E+00 | 0.25 | 30.90 | 0.25 | 0.00 | .91906E+04 |
| 70.76 | 0.00 | 0.00 | 468.0 | 0.214E+00 | 0.26 | 31.06 | 0.26 | 0.00 | .92733E+04 |
| 71.39 | 0.00 | 0.00 | 475.5 | 0.210E+00 | 0.26 | 31.23 | 0.26 | 0.00 | .93559E+04 |
| 72.02 | 0.00 | 0.00 | 483.2 | 0.207E+00 | 0.26 | 31.39 | 0.26 | 0.00 | .94386E+04 |
| 72.65 | 0.00 | 0.00 | 490.9 | 0.204E+00 | 0.27 | 31.56 | 0.27 | 0.00 | .95212E+04 |
| 73.28 | 0.00 | 0.00 | 498.7 | 0.201E+00 | 0.27 | 31.72 | 0.27 | 0.00 | .96039E+04 |
| 73.91 | 0.00 | 0.00 | 506.6 | 0.197E+00 | 0.27 | 31.89 | 0.27 | 0.00 | .96865E+04 |
| 74.54 | 0.00 | 0.00 | 514.6 | 0.194E+00 | 0.27 | 32.05 | 0.27 | 0.00 | .97692E+04 |
| 75.17 | 0.00 | 0.00 | 522.7 | 0.191E+00 | 0.28 | 32.22 | 0.28 | 0.00 | .98518E+04 |
| 75.80 | 0.00 | 0.00 | 530.8 | 0.188E+00 | 0.28 | 32.38 | 0.28 | 0.00 | .99345E+04 |
| 76.44 | 0.00 | 0.00 | 539.0 | 0.186E+00 | 0.28 | 32.55 | 0.28 | 0.00 | .10017E+05 |
| 77.07 | 0.00 | 0.00 | 547.3 | 0.183E+00 | 0.29 | 32.71 | 0.29 | 0.00 | .10100E+05 |
| 77.70 | 0.00 | 0.00 | 555.7 | 0.180E+00 | 0.29 | 32.87 | 0.29 | 0.00 | .10182E+05 |
| 78.33 | 0.00 | 0.00 | 564.2 | 0.177E+00 | 0.29 | 33.04 | 0.29 | 0.00 | .10265E+05 |
| 78.96 | 0.00 | 0.00 | 572.8 | 0.175E+00 | 0.29 | 33.20 | 0.29 | 0.00 | .10348E+05 |
| 79.59 | 0.00 | 0.00 | 581.4 | 0.172E+00 | 0.30 | 33.37 | 0.30 | 0.00 | .10430E+05 |
| 80.22 | 0.00 | 0.00 | 590.1 | 0.169E+00 | 0.30 | 33.53 | 0.30 | 0.00 | .10513E+05 |
| 80.85 | 0.00 | 0.00 | 598.9 | 0.167E+00 | 0.30 | 33.70 | 0.30 | 0.00 | .10596E+05 |
| 81.48 | 0.00 | 0.00 | 607.8 | 0.165E+00 | 0.31 | 33.86 | 0.31 | 0.00 | .10678E+05 |
| 82.11 | 0.00 | 0.00 | 616.8 | 0.162E+00 | 0.31 | 34.02 | 0.31 | 0.00 | .10761E+05 |
| 82.74 | 0.00 | 0.00 | 625.9 | 0.160E+00 | 0.31 | 34.19 | 0.31 | 0.00 | .10844E+05 |
| 83.37 | 0.00 | 0.00 | 635.1 | 0.157E+00 | 0.32 | 34.35 | 0.32 | 0.00 | .10926E+05 |
| 84.00 | 0.00 | 0.00 | 644.3 | 0.155E+00 | 0.32 | 34.52 | 0.32 | 0.00 | .11009E+05 |
| 84.63 | 0.00 | 0.00 | 653.7 | 0.153E+00 | 0.32 | 34.68 | 0.32 | 0.00 | .11092E+05 |
| 85.26 | 0.00 | 0.00 | 663.1 | 0.151E+00 | 0.32 | 34.84 | 0.32 | 0.00 | .11174E+05 |
| 85.89 | 0.00 | 0.00 | 672.6 | 0.149E+00 | 0.33 | 35.01 | 0.33 | 0.00 | .11257E+05 |
| 86.52 | 0.00 | 0.00 | 682.2 | 0.147E+00 | 0.33 | 35.17 | 0.33 | 0.00 | .11340E+05 |
| 87.15 | 0.00 | 0.00 | 691.9 | 0.145E+00 | 0.33 | 35.34 | 0.33 | 0.00 | .11422E+05 |
| 87.78 | 0.00 | 0.00 | 701.7 | 0.143E+00 | 0.34 | 35.50 | 0.34 | 0.00 | .11505E+05 |
| 88.41 | 0.00 | 0.00 | 711.6 | 0.141E+00 | 0.34 | 35.66 | 0.34 | 0.00 | .11588E+05 |
| 89.04 | 0.00 | 0.00 | 721.6 | 0.139E+00 | 0.34 | 35.83 | 0.34 | 0.00 | .11670E+05 |
| 89.67 | 0.00 | 0.00 | 731.6 | 0.137E+00 | 0.35 | 35.99 | 0.35 | 0.00 | .11753E+05 |
| 90.30 | 0.00 | 0.00 | 741.8 | 0.135E+00 | 0.35 | 36.15 | 0.35 | 0.00 | .11836E+05 |
| 90.93 | 0.00 | 0.00 | 752.0 | 0.133E+00 | 0.35 | 36.32 | 0.35 | 0.00 | .11918E+05 |
| 91.56 | 0.00 | 0.00 | 762.4 | 0.131E+00 | 0.36 | 36.48 | 0.36 | 0.00 | .12001E+05 |
| 92.19 | 0.00 | 0.00 | 772.8 | 0.129E+00 | 0.36 | 36.64 | 0.36 | 0.00 | .12084E+05 |
| 92.82 | 0.00 | 0.00 | 783.3 | 0.128E+00 | 0.36 | 36.81 | 0.36 | 0.00 | .12166E+05 |

| | | | | | | | | | |
|---|---|---|---|---|---|---|---|---|---|
| 93.45 | 0.00 | 0.00 | 793.9 | 0.126E+00 | 0.37 | 36.97 | 0.37 | 0.00 | .12249E+05 |
| 94.09 | 0.00 | 0.00 | 804.6 | 0.124E+00 | 0.37 | 37.13 | 0.37 | 0.00 | .12331E+05 |
| 94.72 | 0.00 | 0.00 | 815.4 | 0.123E+00 | 0.37 | 37.30 | 0.37 | 0.00 | .12414E+05 |
| 95.35 | 0.00 | 0.00 | 826.3 | 0.121E+00 | 0.38 | 37.46 | 0.38 | 0.00 | .12497E+05 |
| 95.98 | 0.00 | 0.00 | 837.3 | 0.119E+00 | 0.38 | 37.62 | 0.38 | 0.00 | .12579E+05 |
| 96.61 | 0.00 | 0.00 | 848.4 | 0.118E+00 | 0.38 | 37.79 | 0.38 | 0.00 | .12662E+05 |
| 97.24 | 0.00 | 0.00 | 859.6 | 0.116E+00 | 0.39 | 37.95 | 0.39 | 0.00 | .12745E+05 |
| 97.87 | 0.00 | 0.00 | 870.9 | 0.115E+00 | 0.39 | 38.11 | 0.39 | 0.00 | .12827E+05 |
| 98.50 | 0.00 | 0.00 | 882.3 | 0.113E+00 | 0.39 | 38.28 | 0.39 | 0.00 | .12910E+05 |
| 99.13 | 0.00 | 0.00 | 893.8 | 0.112E+00 | 0.40 | 38.44 | 0.40 | 0.00 | .12993E+05 |
| 99.76 | 0.00 | 0.00 | 905.3 | 0.110E+00 | 0.40 | 38.60 | 0.40 | 0.00 | .13075E+05 |
| 100.39 | 0.00 | 0.00 | 917.0 | 0.109E+00 | 0.40 | 38.76 | 0.40 | 0.00 | .13158E+05 |
| 101.02 | 0.00 | 0.00 | 928.8 | 0.108E+00 | 0.41 | 38.93 | 0.41 | 0.00 | .13241E+05 |
| 101.65 | 0.00 | 0.00 | 940.6 | 0.106E+00 | 0.41 | 39.09 | 0.41 | 0.00 | .13323E+05 |
| 102.28 | 0.00 | 0.00 | 952.6 | 0.105E+00 | 0.41 | 39.25 | 0.41 | 0.00 | .13406E+05 |
| 102.91 | 0.00 | 0.00 | 964.7 | 0.104E+00 | 0.42 | 39.41 | 0.42 | 0.00 | .13489E+05 |
| 103.54 | 0.00 | 0.00 | 976.8 | 0.102E+00 | 0.42 | 39.58 | 0.42 | 0.00 | .13571E+05 |
| 104.17 | 0.00 | 0.00 | 989.1 | 0.101E+00 | 0.42 | 39.74 | 0.42 | 0.00 | .13654E+05 |
| 104.80 | 0.00 | 0.00 | 1001.5 | 0.999E-01 | 0.43 | 39.90 | 0.43 | 0.00 | .13737E+05 |
| 105.43 | 0.00 | 0.00 | 1013.9 | 0.986E-01 | 0.43 | 40.06 | 0.43 | 0.00 | .13819E+05 |
| 106.06 | 0.00 | 0.00 | 1026.5 | 0.974E-01 | 0.44 | 40.23 | 0.44 | 0.00 | .13902E+05 |
| 106.69 | 0.00 | 0.00 | 1039.2 | 0.962E-01 | 0.44 | 40.39 | 0.44 | 0.00 | .13985E+05 |
| 107.32 | 0.00 | 0.00 | 1052.0 | 0.951E-01 | 0.44 | 40.55 | 0.44 | 0.00 | .14067E+05 |
| 107.95 | 0.00 | 0.00 | 1064.8 | 0.939E-01 | 0.45 | 40.71 | 0.45 | 0.00 | .14150E+05 |
| 108.58 | 0.00 | 0.00 | 1077.8 | 0.928E-01 | 0.45 | 40.87 | 0.45 | 0.00 | .14233E+05 |
| 109.21 | 0.00 | 0.00 | 1090.9 | 0.917E-01 | 0.45 | 41.04 | 0.45 | 0.00 | .14315E+05 |
| 109.84 | 0.00 | 0.00 | 1104.1 | 0.906E-01 | 0.46 | 41.20 | 0.46 | 0.00 | .14398E+05 |
| 110.47 | 0.00 | 0.00 | 1117.4 | 0.895E-01 | 0.46 | 41.36 | 0.46 | 0.00 | .14480E+05 |
| 111.10 | 0.00 | 0.00 | 1130.8 | 0.884E-01 | 0.46 | 41.52 | 0.46 | 0.00 | .14563E+05 |
| 111.74 | 0.00 | 0.00 | 1144.3 | 0.874E-01 | 0.47 | 41.68 | 0.47 | 0.00 | .14646E+05 |
| 112.37 | 0.00 | 0.00 | 1157.9 | 0.864E-01 | 0.47 | 41.85 | 0.47 | 0.00 | .14728E+05 |
| 113.00 | 0.00 | 0.00 | 1171.6 | 0.854E-01 | 0.48 | 42.01 | 0.48 | 0.00 | .14811E+05 |
| 113.63 | 0.00 | 0.00 | 1185.4 | 0.844E-01 | 0.48 | 42.17 | 0.48 | 0.00 | .14894E+05 |
| 114.26 | 0.00 | 0.00 | 1199.3 | 0.834E-01 | 0.48 | 42.33 | 0.48 | 0.00 | .14976E+05 |
| 114.89 | 0.00 | 0.00 | 1213.4 | 0.824E-01 | 0.49 | 42.49 | 0.49 | 0.00 | .15059E+05 |
| 115.52 | 0.00 | 0.00 | 1227.5 | 0.815E-01 | 0.49 | 42.65 | 0.49 | 0.00 | .15142E+05 |
| 116.15 | 0.00 | 0.00 | 1241.7 | 0.805E-01 | 0.49 | 42.82 | 0.49 | 0.00 | .15224E+05 |
| 116.78 | 0.00 | 0.00 | 1256.1 | 0.796E-01 | 0.50 | 42.98 | 0.50 | 0.00 | .15307E+05 |
| 117.41 | 0.00 | 0.00 | 1270.6 | 0.787E-01 | 0.50 | 43.14 | 0.50 | 0.00 | .15390E+05 |
| 118.04 | 0.00 | 0.00 | 1285.1 | 0.778E-01 | 0.51 | 43.30 | 0.51 | 0.00 | .15472E+05 |
| 118.67 | 0.00 | 0.00 | 1299.8 | 0.769E-01 | 0.51 | 43.46 | 0.51 | 0.00 | .15555E+05 |
| 119.30 | 0.00 | 0.00 | 1314.6 | 0.761E-01 | 0.51 | 43.62 | 0.51 | 0.00 | .15638E+05 |
| 119.93 | 0.00 | 0.00 | 1329.5 | 0.752E-01 | 0.52 | 43.78 | 0.52 | 0.00 | .15720E+05 |
| 120.56 | 0.00 | 0.00 | 1344.5 | 0.744E-01 | 0.52 | 43.95 | 0.52 | 0.00 | .15803E+05 |
| 121.19 | 0.00 | 0.00 | 1359.6 | 0.736E-01 | 0.53 | 44.11 | 0.53 | 0.00 | .15886E+05 |
| 121.82 | 0.00 | 0.00 | 1374.8 | 0.727E-01 | 0.53 | 44.27 | 0.53 | 0.00 | .15968E+05 |
| 122.45 | 0.00 | 0.00 | 1390.2 | 0.719E-01 | 0.53 | 44.43 | 0.53 | 0.00 | .16051E+05 |
| 123.08 | 0.00 | 0.00 | 1405.6 | 0.711E-01 | 0.54 | 44.59 | 0.54 | 0.00 | .16134E+05 |
| 123.71 | 0.00 | 0.00 | 1421.2 | 0.704E-01 | 0.54 | 44.75 | 0.54 | 0.00 | .16216E+05 |
| 124.34 | 0.00 | 0.00 | 1436.9 | 0.696E-01 | 0.55 | 44.91 | 0.55 | 0.00 | .16299E+05 |
| 124.97 | 0.00 | 0.00 | 1452.7 | 0.688E-01 | 0.55 | 45.07 | 0.55 | 0.00 | .16382E+05 |
| 125.60 | 0.00 | 0.00 | 1468.6 | 0.681E-01 | 0.55 | 45.23 | 0.55 | 0.00 | .16464E+05 |
| 126.23 | 0.00 | 0.00 | 1484.6 | 0.674E-01 | 0.56 | 45.39 | 0.56 | 0.00 | .16547E+05 |
| 126.86 | 0.00 | 0.00 | 1500.7 | 0.666E-01 | 0.56 | 45.56 | 0.56 | 0.00 | .16630E+05 |
| 127.49 | 0.00 | 0.00 | 1516.9 | 0.659E-01 | 0.57 | 45.72 | 0.57 | 0.00 | .16712E+05 |
| 128.12 | 0.00 | 0.00 | 1533.3 | 0.652E-01 | 0.57 | 45.88 | 0.57 | 0.00 | .16795E+05 |
| 128.75 | 0.00 | 0.00 | 1549.8 | 0.645E-01 | 0.57 | 46.04 | 0.57 | 0.00 | .16877E+05 |
| 129.38 | 0.00 | 0.00 | 1566.3 | 0.638E-01 | 0.58 | 46.20 | 0.58 | 0.00 | .16960E+05 |
| 130.02 | 0.00 | 0.00 | 1583.0 | 0.632E-01 | 0.58 | 46.36 | 0.58 | 0.00 | .17043E+05 |
| 130.65 | 0.00 | 0.00 | 1599.9 | 0.625E-01 | 0.59 | 46.52 | 0.59 | 0.00 | .17125E+05 |
| 131.28 | 0.00 | 0.00 | 1616.8 | 0.619E-01 | 0.59 | 46.68 | 0.59 | 0.00 | .17208E+05 |
| 131.91 | 0.00 | 0.00 | 1633.8 | 0.612E-01 | 0.59 | 46.84 | 0.59 | 0.00 | .17291E+05 |
| 132.54 | 0.00 | 0.00 | 1651.0 | 0.606E-01 | 0.60 | 47.00 | 0.60 | 0.00 | .17373E+05 |
| 133.17 | 0.00 | 0.00 | 1668.3 | 0.599E-01 | 0.60 | 47.16 | 0.60 | 0.00 | .17456E+05 |

Cumulative travel time = 17456.0781 sec ( 4.85 hrs)

---

Plume is ATTACHED to LEFT bank/shore.
Plume width is now determined from LEFT bank/shore.

Plume Stage 2 (bank attached):

| X | Y | Z | S | C | BV | BH | ZU | ZL | TT |
|---|---|---|---|---|---|---|---|---|---|
| 133.17 | 47.16 | 0.00 | 1668.3 | 0.599E-01 | 0.60 | 94.32 | 0.60 | 0.00 | .17456E+05 |
| 134.76 | 47.16 | 0.00 | 1709.7 | 0.585E-01 | 0.62 | 94.59 | 0.62 | 0.00 | .17664E+05 |
| 136.34 | 47.16 | 0.00 | 1751.4 | 0.571E-01 | 0.63 | 94.86 | 0.63 | 0.00 | .17873E+05 |
| 137.93 | 47.16 | 0.00 | 1793.4 | 0.558E-01 | 0.64 | 95.13 | 0.64 | 0.00 | .18081E+05 |
| 139.52 | 47.16 | 0.00 | 1835.6 | 0.545E-01 | 0.66 | 95.40 | 0.66 | 0.00 | .18289E+05 |
| 141.11 | 47.16 | 0.00 | 1878.1 | 0.532E-01 | 0.67 | 95.67 | 0.67 | 0.00 | .18497E+05 |
| 142.70 | 47.16 | 0.00 | 1920.8 | 0.521E-01 | 0.68 | 95.95 | 0.68 | 0.00 | .18705E+05 |
| 144.28 | 47.16 | 0.00 | 1963.9 | 0.509E-01 | 0.70 | 96.23 | 0.70 | 0.00 | .18914E+05 |
| 145.87 | 47.16 | 0.00 | 2007.2 | 0.498E-01 | 0.71 | 96.50 | 0.71 | 0.00 | .19122E+05 |
| 147.46 | 47.16 | 0.00 | 2050.8 | 0.488E-01 | 0.72 | 96.79 | 0.72 | 0.00 | .19330E+05 |
| 149.05 | 47.16 | 0.00 | 2094.7 | 0.477E-01 | 0.74 | 97.07 | 0.74 | 0.00 | .19538E+05 |
| 150.64 | 47.16 | 0.00 | 2138.8 | 0.468E-01 | 0.75 | 97.35 | 0.75 | 0.00 | .19747E+05 |
| 152.22 | 47.16 | 0.00 | 2183.3 | 0.458E-01 | 0.76 | 97.64 | 0.76 | 0.00 | .19955E+05 |
| 153.81 | 47.16 | 0.00 | 2228.0 | 0.449E-01 | 0.78 | 97.92 | 0.78 | 0.00 | .20163E+05 |
| 155.40 | 47.16 | 0.00 | 2273.0 | 0.440E-01 | 0.79 | 98.21 | 0.79 | 0.00 | .20371E+05 |
| 156.99 | 47.16 | 0.00 | 2318.4 | 0.431E-01 | 0.80 | 98.50 | 0.80 | 0.00 | .20580E+05 |
| 158.58 | 47.16 | 0.00 | 2364.0 | 0.423E-01 | 0.82 | 98.79 | 0.82 | 0.00 | .20788E+05 |
| 160.17 | 47.16 | 0.00 | 2409.9 | 0.415E-01 | 0.83 | 99.08 | 0.83 | 0.00 | .20996E+05 |
| 161.75 | 47.16 | 0.00 | 2456.1 | 0.407E-01 | 0.84 | 99.38 | 0.84 | 0.00 | .21204E+05 |
| 163.34 | 47.16 | 0.00 | 2502.6 | 0.400E-01 | 0.86 | 99.67 | 0.86 | 0.00 | .21413E+05 |
| 164.93 | 47.16 | 0.00 | 2549.4 | 0.392E-01 | 0.87 | 99.97 | 0.87 | 0.00 | .21621E+05 |
| 166.52 | 47.16 | 0.00 | 2596.5 | 0.385E-01 | 0.88 | 100.26 | 0.88 | 0.00 | .21829E+05 |
| 168.11 | 47.16 | 0.00 | 2643.9 | 0.378E-01 | 0.90 | 100.56 | 0.90 | 0.00 | .22037E+05 |
| 169.69 | 47.16 | 0.00 | 2691.6 | 0.372E-01 | 0.91 | 100.86 | 0.91 | 0.00 | .22246E+05 |
| 171.28 | 47.16 | 0.00 | 2739.7 | 0.365E-01 | 0.92 | 101.16 | 0.92 | 0.00 | .22454E+05 |
| 172.87 | 47.16 | 0.00 | 2788.0 | 0.359E-01 | 0.94 | 101.46 | 0.94 | 0.00 | .22662E+05 |
| 174.46 | 47.16 | 0.00 | 2836.7 | 0.353E-01 | 0.95 | 101.76 | 0.95 | 0.00 | .22870E+05 |
| 176.05 | 47.16 | 0.00 | 2885.6 | 0.347E-01 | 0.96 | 102.07 | 0.96 | 0.00 | .23079E+05 |
| 177.63 | 47.16 | 0.00 | 2934.9 | 0.341E-01 | 0.98 | 102.37 | 0.98 | 0.00 | .23287E+05 |
| 179.22 | 47.16 | 0.00 | 2984.5 | 0.335E-01 | 0.99 | 102.68 | 0.99 | 0.00 | .23495E+05 |
| 180.81 | 47.16 | 0.00 | 3034.5 | 0.330E-01 | 1.00 | 102.98 | 1.00 | 0.00 | .23703E+05 |
| 182.40 | 47.16 | 0.00 | 3084.7 | 0.324E-01 | 1.02 | 103.29 | 1.02 | 0.00 | .23911E+05 |
| 183.99 | 47.16 | 0.00 | 3135.3 | 0.319E-01 | 1.03 | 103.60 | 1.03 | 0.00 | .24120E+05 |
| 185.58 | 47.16 | 0.00 | 3186.2 | 0.314E-01 | 1.05 | 103.91 | 1.05 | 0.00 | .24328E+05 |
| 187.16 | 47.16 | 0.00 | 3237.4 | 0.309E-01 | 1.06 | 104.22 | 1.06 | 0.00 | .24536E+05 |
| 188.75 | 47.16 | 0.00 | 3289.0 | 0.304E-01 | 1.07 | 104.53 | 1.07 | 0.00 | .24744E+05 |
| 190.34 | 47.16 | 0.00 | 3340.9 | 0.299E-01 | 1.09 | 104.84 | 1.09 | 0.00 | .24953E+05 |
| 191.93 | 47.16 | 0.00 | 3393.1 | 0.295E-01 | 1.10 | 105.15 | 1.10 | 0.00 | .25161E+05 |
| 193.52 | 47.16 | 0.00 | 3445.7 | 0.290E-01 | 1.11 | 105.47 | 1.11 | 0.00 | .25369E+05 |
| 195.10 | 47.16 | 0.00 | 3498.6 | 0.286E-01 | 1.13 | 105.78 | 1.13 | 0.00 | .25577E+05 |
| 196.69 | 47.16 | 0.00 | 3551.8 | 0.282E-01 | 1.14 | 106.10 | 1.14 | 0.00 | .25786E+05 |
| 198.28 | 47.16 | 0.00 | 3605.4 | 0.277E-01 | 1.16 | 106.41 | 1.16 | 0.00 | .25994E+05 |
| 199.87 | 47.16 | 0.00 | 3659.3 | 0.273E-01 | 1.17 | 106.73 | 1.17 | 0.00 | .26202E+05 |
| 201.46 | 47.16 | 0.00 | 3713.5 | 0.269E-01 | 1.18 | 107.05 | 1.18 | 0.00 | .26410E+05 |
| 203.04 | 47.16 | 0.00 | 3768.1 | 0.265E-01 | 1.20 | 107.36 | 1.20 | 0.00 | .26619E+05 |
| 204.63 | 47.16 | 0.00 | 3823.1 | 0.262E-01 | 1.21 | 107.68 | 1.21 | 0.00 | .26827E+05 |
| 206.22 | 47.16 | 0.00 | 3878.4 | 0.258E-01 | 1.22 | 108.00 | 1.22 | 0.00 | .27035E+05 |
| 207.81 | 47.16 | 0.00 | 3934.0 | 0.254E-01 | 1.24 | 108.32 | 1.24 | 0.00 | .27243E+05 |
| 209.40 | 47.16 | 0.00 | 3990.0 | 0.251E-01 | 1.25 | 108.64 | 1.25 | 0.00 | .27452E+05 |
| 210.98 | 47.16 | 0.00 | 4046.4 | 0.247E-01 | 1.27 | 108.96 | 1.27 | 0.00 | .27660E+05 |
| 212.57 | 47.16 | 0.00 | 4103.1 | 0.244E-01 | 1.28 | 109.29 | 1.28 | 0.00 | .27868E+05 |
| 214.16 | 47.16 | 0.00 | 4160.2 | 0.240E-01 | 1.29 | 109.61 | 1.29 | 0.00 | .28076E+05 |
| 215.75 | 47.16 | 0.00 | 4217.6 | 0.237E-01 | 1.31 | 109.93 | 1.31 | 0.00 | .28285E+05 |
| 217.34 | 47.16 | 0.00 | 4275.4 | 0.234E-01 | 1.32 | 110.26 | 1.32 | 0.00 | .28493E+05 |
| 218.93 | 47.16 | 0.00 | 4333.5 | 0.231E-01 | 1.34 | 110.58 | 1.34 | 0.00 | .28701E+05 |
| 220.51 | 47.16 | 0.00 | 4392.0 | 0.228E-01 | 1.35 | 110.90 | 1.35 | 0.00 | .28909E+05 |
| 222.10 | 47.16 | 0.00 | 4450.9 | 0.225E-01 | 1.36 | 111.23 | 1.36 | 0.00 | .29117E+05 |
| 223.69 | 47.16 | 0.00 | 4510.1 | 0.222E-01 | 1.38 | 111.56 | 1.38 | 0.00 | .29326E+05 |
| 225.28 | 47.16 | 0.00 | 4569.7 | 0.219E-01 | 1.39 | 111.88 | 1.39 | 0.00 | .29534E+05 |
| 226.87 | 47.16 | 0.00 | 4629.7 | 0.216E-01 | 1.41 | 112.21 | 1.41 | 0.00 | .29742E+05 |
| 228.45 | 47.16 | 0.00 | 4690.1 | 0.213E-01 | 1.42 | 112.54 | 1.42 | 0.00 | .29950E+05 |
| 230.04 | 47.16 | 0.00 | 4750.8 | 0.210E-01 | 1.44 | 112.86 | 1.44 | 0.00 | .30159E+05 |
| 231.63 | 47.16 | 0.00 | 4811.9 | 0.208E-01 | 1.45 | 113.19 | 1.45 | 0.00 | .30367E+05 |
| 233.22 | 47.16 | 0.00 | 4873.3 | 0.205E-01 | 1.46 | 113.52 | 1.46 | 0.00 | .30575E+05 |
| 234.81 | 47.16 | 0.00 | 4935.2 | 0.203E-01 | 1.48 | 113.85 | 1.48 | 0.00 | .30783E+05 |
| 236.39 | 47.16 | 0.00 | 4997.4 | 0.200E-01 | 1.49 | 114.18 | 1.49 | 0.00 | .30992E+05 |
| 237.98 | 47.16 | 0.00 | 5060.0 | 0.198E-01 | 1.51 | 114.51 | 1.51 | 0.00 | .31200E+05 |
| 239.57 | 47.16 | 0.00 | 5123.0 | 0.195E-01 | 1.52 | 114.84 | 1.52 | 0.00 | .31408E+05 |

| | | | | | | | | | |
|---|---|---|---|---|---|---|---|---|---|
| 241.16 | 47.16 | 0.00 | 5186.3 | 0.193E-01 | 1.54 | 115.17 | 1.54 | 0.00 | .31616E+05 |
| 242.75 | 47.16 | 0.00 | 5250.1 | 0.190E-01 | 1.55 | 115.50 | 1.55 | 0.00 | .31825E+05 |
| 244.34 | 47.16 | 0.00 | 5314.2 | 0.188E-01 | 1.56 | 115.84 | 1.56 | 0.00 | .32033E+05 |
| 245.92 | 47.16 | 0.00 | 5378.7 | 0.186E-01 | 1.58 | 116.17 | 1.58 | 0.00 | .32241E+05 |
| 247.51 | 47.16 | 0.00 | 5443.6 | 0.184E-01 | 1.59 | 116.50 | 1.59 | 0.00 | .32449E+05 |
| 249.10 | 47.16 | 0.00 | 5508.9 | 0.182E-01 | 1.61 | 116.83 | 1.61 | 0.00 | .32658E+05 |
| 250.69 | 47.16 | 0.00 | 5574.6 | 0.179E-01 | 1.62 | 117.17 | 1.62 | 0.00 | .32866E+05 |
| 252.28 | 47.16 | 0.00 | 5640.7 | 0.177E-01 | 1.64 | 117.50 | 1.64 | 0.00 | .33074E+05 |
| 253.86 | 47.16 | 0.00 | 5707.2 | 0.175E-01 | 1.65 | 117.84 | 1.65 | 0.00 | .33282E+05 |
| 255.45 | 47.16 | 0.00 | 5774.0 | 0.173E-01 | 1.67 | 118.17 | 1.67 | 0.00 | .33491E+05 |
| 257.04 | 47.16 | 0.00 | 5841.3 | 0.171E-01 | 1.68 | 118.51 | 1.68 | 0.00 | .33699E+05 |
| 258.63 | 47.16 | 0.00 | 5909.0 | 0.169E-01 | 1.70 | 118.84 | 1.70 | 0.00 | .33907E+05 |
| 260.22 | 47.16 | 0.00 | 5977.0 | 0.167E-01 | 1.71 | 119.18 | 1.71 | 0.00 | .34115E+05 |
| 261.80 | 47.16 | 0.00 | 6045.5 | 0.165E-01 | 1.72 | 119.51 | 1.72 | 0.00 | .34323E+05 |
| 263.39 | 47.16 | 0.00 | 6114.3 | 0.164E-01 | 1.74 | 119.85 | 1.74 | 0.00 | .34532E+05 |
| 264.98 | 47.16 | 0.00 | 6183.6 | 0.162E-01 | 1.75 | 120.18 | 1.75 | 0.00 | .34740E+05 |
| 266.57 | 47.16 | 0.00 | 6253.3 | 0.160E-01 | 1.77 | 120.52 | 1.77 | 0.00 | .34948E+05 |
| 268.16 | 47.16 | 0.00 | 6323.4 | 0.158E-01 | 1.78 | 120.86 | 1.78 | 0.00 | .35156E+05 |
| 269.75 | 47.16 | 0.00 | 6393.9 | 0.156E-01 | 1.80 | 121.20 | 1.80 | 0.00 | .35365E+05 |
| 271.33 | 47.16 | 0.00 | 6464.8 | 0.155E-01 | 1.81 | 121.53 | 1.81 | 0.00 | .35573E+05 |
| 272.92 | 47.16 | 0.00 | 6536.1 | 0.153E-01 | 1.83 | 121.87 | 1.83 | 0.00 | .35781E+05 |
| 274.51 | 47.16 | 0.00 | 6607.8 | 0.151E-01 | 1.84 | 122.21 | 1.84 | 0.00 | .35989E+05 |
| 276.10 | 47.16 | 0.00 | 6679.9 | 0.150E-01 | 1.86 | 122.55 | 1.86 | 0.00 | .36198E+05 |
| 277.69 | 47.16 | 0.00 | 6752.5 | 0.148E-01 | 1.87 | 122.89 | 1.87 | 0.00 | .36406E+05 |
| 279.27 | 47.16 | 0.00 | 6825.4 | 0.147E-01 | 1.89 | 123.23 | 1.89 | 0.00 | .36614E+05 |
| 280.86 | 47.16 | 0.00 | 6898.8 | 0.145E-01 | 1.90 | 123.56 | 1.90 | 0.00 | .36822E+05 |
| 282.45 | 47.16 | 0.00 | 6972.6 | 0.143E-01 | 1.92 | 123.90 | 1.92 | 0.00 | .37031E+05 |
| 284.04 | 47.16 | 0.00 | 7046.9 | 0.142E-01 | 1.93 | 124.24 | 1.93 | 0.00 | .37239E+05 |
| 285.63 | 47.16 | 0.00 | 7121.5 | 0.140E-01 | 1.95 | 124.58 | 1.95 | 0.00 | .37447E+05 |
| 287.21 | 47.16 | 0.00 | 7196.6 | 0.139E-01 | 1.96 | 124.92 | 1.96 | 0.00 | .37655E+05 |
| 288.80 | 47.16 | 0.00 | 7272.1 | 0.138E-01 | 1.98 | 125.26 | 1.98 | 0.00 | .37864E+05 |
| 290.39 | 47.16 | 0.00 | 7348.0 | 0.136E-01 | 1.99 | 125.60 | 1.99 | 0.00 | .38072E+05 |
| 291.98 | 47.16 | 0.00 | 7424.3 | 0.135E-01 | 2.01 | 125.95 | 2.01 | 0.00 | .38280E+05 |
| 293.57 | 47.16 | 0.00 | 7501.1 | 0.133E-01 | 2.03 | 126.29 | 2.03 | 0.00 | .38488E+05 |
| 295.15 | 47.16 | 0.00 | 7578.3 | 0.132E-01 | 2.04 | 126.63 | 2.04 | 0.00 | .38696E+05 |
| 296.74 | 47.16 | 0.00 | 7655.9 | 0.131E-01 | 2.06 | 126.97 | 2.06 | 0.00 | .38905E+05 |
| 298.33 | 47.16 | 0.00 | 7734.0 | 0.129E-01 | 2.07 | 127.31 | 2.07 | 0.00 | .39113E+05 |
| 299.92 | 47.16 | 0.00 | 7812.5 | 0.128E-01 | 2.09 | 127.65 | 2.09 | 0.00 | .39321E+05 |
| 301.51 | 47.16 | 0.00 | 7891.5 | 0.127E-01 | 2.10 | 127.99 | 2.10 | 0.00 | .39529E+05 |
| 303.10 | 47.16 | 0.00 | 7970.8 | 0.125E-01 | 2.12 | 128.34 | 2.12 | 0.00 | .39738E+05 |
| 304.68 | 47.16 | 0.00 | 8050.6 | 0.124E-01 | 2.13 | 128.68 | 2.13 | 0.00 | .39946E+05 |
| 306.27 | 47.16 | 0.00 | 8130.9 | 0.123E-01 | 2.15 | 129.02 | 2.15 | 0.00 | .40154E+05 |
| 307.86 | 47.16 | 0.00 | 8211.6 | 0.122E-01 | 2.16 | 129.36 | 2.16 | 0.00 | .40362E+05 |
| 309.45 | 47.16 | 0.00 | 8292.7 | 0.121E-01 | 2.18 | 129.71 | 2.18 | 0.00 | .40571E+05 |
| 311.04 | 47.16 | 0.00 | 8374.3 | 0.119E-01 | 2.20 | 130.05 | 2.20 | 0.00 | .40779E+05 |
| 312.62 | 47.16 | 0.00 | 8456.3 | 0.118E-01 | 2.21 | 130.39 | 2.21 | 0.00 | .40987E+05 |
| 314.21 | 47.16 | 0.00 | 8538.8 | 0.117E-01 | 2.23 | 130.74 | 2.23 | 0.00 | .41195E+05 |
| 315.80 | 47.16 | 0.00 | 8621.7 | 0.116E-01 | 2.24 | 131.08 | 2.24 | 0.00 | .41404E+05 |
| 317.39 | 47.16 | 0.00 | 8705.1 | 0.115E-01 | 2.26 | 131.42 | 2.26 | 0.00 | .41612E+05 |
| 318.98 | 47.16 | 0.00 | 8788.9 | 0.114E-01 | 2.27 | 131.77 | 2.27 | 0.00 | .41820E+05 |
| 320.56 | 47.16 | 0.00 | 8873.1 | 0.113E-01 | 2.29 | 132.11 | 2.29 | 0.00 | .42028E+05 |
| 322.15 | 47.16 | 0.00 | 8957.8 | 0.112E-01 | 2.31 | 132.45 | 2.31 | 0.00 | .42236E+05 |
| 323.74 | 47.16 | 0.00 | 9043.0 | 0.111E-01 | 2.32 | 132.80 | 2.32 | 0.00 | .42445E+05 |
| 325.33 | 47.16 | 0.00 | 9128.6 | 0.110E-01 | 2.34 | 133.14 | 2.34 | 0.00 | .42653E+05 |
| 326.92 | 47.16 | 0.00 | 9214.7 | 0.109E-01 | 2.35 | 133.49 | 2.35 | 0.00 | .42861E+05 |
| 328.51 | 47.16 | 0.00 | 9301.2 | 0.108E-01 | 2.37 | 133.83 | 2.37 | 0.00 | .43069E+05 |
| 330.09 | 47.16 | 0.00 | 9388.2 | 0.107E-01 | 2.39 | 134.18 | 2.39 | 0.00 | .43278E+05 |
| 331.68 | 47.16 | 0.00 | 9475.7 | 0.106E-01 | 2.40 | 134.52 | 2.40 | 0.00 | .43486E+05 |
| 333.27 | 47.16 | 0.00 | 9563.6 | 0.105E-01 | 2.42 | 134.87 | 2.42 | 0.00 | .43694E+05 |
| 334.86 | 47.16 | 0.00 | 9652.0 | 0.104E-01 | 2.43 | 135.21 | 2.43 | 0.00 | .43902E+05 |
| 336.45 | 47.16 | 0.00 | 9740.8 | 0.103E-01 | 2.45 | 135.56 | 2.45 | 0.00 | .44111E+05 |
| 338.03 | 47.16 | 0.00 | 9830.1 | 0.102E-01 | 2.47 | 135.90 | 2.47 | 0.00 | .44319E+05 |
| 339.62 | 47.16 | 0.00 | 9919.9 | 0.101E-01 | 2.48 | 136.25 | 2.48 | 0.00 | .44527E+05 |
| 341.21 | 47.16 | 0.00 | 10010.1 | 0.999E-02 | 2.50 | 136.59 | 2.50 | 0.00 | .44735E+05 |
| 342.80 | 47.16 | 0.00 | 10100.8 | 0.990E-02 | 2.51 | 136.94 | 2.51 | 0.00 | .44944E+05 |
| 344.39 | 47.16 | 0.00 | 10192.0 | 0.981E-02 | 2.53 | 137.28 | 2.53 | 0.00 | .45152E+05 |
| 345.97 | 47.16 | 0.00 | 10283.7 | 0.972E-02 | 2.55 | 137.63 | 2.55 | 0.00 | .45360E+05 |
| 347.56 | 47.16 | 0.00 | 10375.8 | 0.964E-02 | 2.56 | 137.97 | 2.56 | 0.00 | .45568E+05 |
| 349.15 | 47.16 | 0.00 | 10468.4 | 0.955E-02 | 2.58 | 138.32 | 2.58 | 0.00 | .45777E+05 |
| 350.74 | 47.16 | 0.00 | 10561.4 | 0.947E-02 | 2.60 | 138.67 | 2.60 | 0.00 | .45985E+05 |

| | | | | | | | | | |
|---|---|---|---|---|---|---|---|---|---|
| 352.33 | 47.16 | 0.00 | 10655.0 | 0.939E-02 | 2.61 | 139.01 | 2.61 | 0.00 | .46193E+05 |
| 353.91 | 47.16 | 0.00 | 10749.0 | 0.930E-02 | 2.63 | 139.36 | 2.63 | 0.00 | .46401E+05 |
| 355.50 | 47.16 | 0.00 | 10843.5 | 0.922E-02 | 2.65 | 139.70 | 2.65 | 0.00 | .46609E+05 |
| 357.09 | 47.16 | 0.00 | 10938.5 | 0.914E-02 | 2.66 | 140.05 | 2.66 | 0.00 | .46818E+05 |
| 358.68 | 47.16 | 0.00 | 11034.0 | 0.906E-02 | 2.68 | 140.40 | 2.68 | 0.00 | .47026E+05 |
| 360.27 | 47.16 | 0.00 | 11129.9 | 0.898E-02 | 2.70 | 140.74 | 2.70 | 0.00 | .47234E+05 |
| 361.86 | 47.16 | 0.00 | 11226.3 | 0.891E-02 | 2.71 | 141.09 | 2.71 | 0.00 | .47442E+05 |
| 363.44 | 47.16 | 0.00 | 11323.2 | 0.883E-02 | 2.73 | 141.44 | 2.73 | 0.00 | .47651E+05 |
| 365.03 | 47.16 | 0.00 | 11420.6 | 0.876E-02 | 2.75 | 141.78 | 2.75 | 0.00 | .47859E+05 |
| 366.62 | 47.16 | 0.00 | 11518.5 | 0.868E-02 | 2.76 | 142.13 | 2.76 | 0.00 | .48067E+05 |
| 368.21 | 47.16 | 0.00 | 11616.9 | 0.861E-02 | 2.78 | 142.48 | 2.78 | 0.00 | .48275E+05 |
| 369.80 | 47.16 | 0.00 | 11715.8 | 0.854E-02 | 2.80 | 142.82 | 2.80 | 0.00 | .48484E+05 |
| 371.38 | 47.16 | 0.00 | 11815.1 | 0.846E-02 | 2.81 | 143.17 | 2.81 | 0.00 | .48692E+05 |
| 372.97 | 47.16 | 0.00 | 11915.0 | 0.839E-02 | 2.83 | 143.52 | 2.83 | 0.00 | .48900E+05 |
| 374.56 | 47.16 | 0.00 | 12015.3 | 0.832E-02 | 2.85 | 143.86 | 2.85 | 0.00 | .49108E+05 |
| 376.15 | 47.16 | 0.00 | 12116.1 | 0.825E-02 | 2.86 | 144.21 | 2.86 | 0.00 | .49317E+05 |
| 377.74 | 47.16 | 0.00 | 12217.5 | 0.819E-02 | 2.88 | 144.56 | 2.88 | 0.00 | .49525E+05 |
| 379.32 | 47.16 | 0.00 | 12319.3 | 0.812E-02 | 2.90 | 144.91 | 2.90 | 0.00 | .49733E+05 |
| 380.91 | 47.16 | 0.00 | 12421.6 | 0.805E-02 | 2.92 | 145.25 | 2.92 | 0.00 | .49941E+05 |
| 382.50 | 47.16 | 0.00 | 12524.4 | 0.798E-02 | 2.93 | 145.60 | 2.93 | 0.00 | .50150E+05 |
| 384.09 | 47.16 | 0.00 | 12627.8 | 0.792E-02 | 2.95 | 145.95 | 2.95 | 0.00 | .50358E+05 |
| 385.68 | 47.16 | 0.00 | 12731.6 | 0.785E-02 | 2.97 | 146.29 | 2.97 | 0.00 | .50566E+05 |
| 387.26 | 47.16 | 0.00 | 12835.9 | 0.779E-02 | 2.98 | 146.64 | 2.98 | 0.00 | .50774E+05 |
| 388.85 | 47.16 | 0.00 | 12940.7 | 0.773E-02 | 3.00 | 146.99 | 3.00 | 0.00 | .50982E+05 |
| 390.44 | 47.16 | 0.00 | 13046.1 | 0.767E-02 | 3.02 | 147.34 | 3.02 | 0.00 | .51191E+05 |
| 392.03 | 47.16 | 0.00 | 13151.9 | 0.760E-02 | 3.04 | 147.68 | 3.04 | 0.00 | .51399E+05 |
| 393.62 | 47.16 | 0.00 | 13258.3 | 0.754E-02 | 3.05 | 148.03 | 3.05 | 0.00 | .51607E+05 |
| 395.21 | 47.16 | 0.00 | 13365.1 | 0.748E-02 | 3.07 | 148.38 | 3.07 | 0.00 | .51815E+05 |
| 396.79 | 47.16 | 0.00 | 13472.5 | 0.742E-02 | 3.09 | 148.73 | 3.09 | 0.00 | .52024E+05 |
| 398.38 | 47.16 | 0.00 | 13580.4 | 0.736E-02 | 3.11 | 149.07 | 3.11 | 0.00 | .52232E+05 |
| 399.97 | 47.16 | 0.00 | 13688.8 | 0.731E-02 | 3.12 | 149.42 | 3.12 | 0.00 | .52440E+05 |
| 401.56 | 47.16 | 0.00 | 13797.7 | 0.725E-02 | 3.14 | 149.77 | 3.14 | 0.00 | .52648E+05 |
| 403.15 | 47.16 | 0.00 | 13907.1 | 0.719E-02 | 3.16 | 150.12 | 3.16 | 0.00 | .52857E+05 |
| 404.73 | 47.16 | 0.00 | 14017.1 | 0.713E-02 | 3.18 | 150.46 | 3.18 | 0.00 | .53065E+05 |
| 406.32 | 47.16 | 0.00 | 14127.5 | 0.708E-02 | 3.19 | 150.81 | 3.19 | 0.00 | .53273E+05 |
| 407.91 | 47.16 | 0.00 | 14238.5 | 0.702E-02 | 3.21 | 151.16 | 3.21 | 0.00 | .53481E+05 |
| 409.50 | 47.16 | 0.00 | 14350.0 | 0.697E-02 | 3.23 | 151.51 | 3.23 | 0.00 | .53690E+05 |
| 411.09 | 47.16 | 0.00 | 14462.0 | 0.691E-02 | 3.25 | 151.85 | 3.25 | 0.00 | .53898E+05 |
| 412.67 | 47.16 | 0.00 | 14574.6 | 0.686E-02 | 3.26 | 152.20 | 3.26 | 0.00 | .54106E+05 |
| 414.26 | 47.16 | 0.00 | 14687.6 | 0.681E-02 | 3.28 | 152.55 | 3.28 | 0.00 | .54314E+05 |
| 415.85 | 47.16 | 0.00 | 14801.2 | 0.676E-02 | 3.30 | 152.90 | 3.30 | 0.00 | .54523E+05 |
| 417.44 | 47.16 | 0.00 | 14915.3 | 0.670E-02 | 3.32 | 153.25 | 3.32 | 0.00 | .54731E+05 |
| 419.03 | 47.16 | 0.00 | 15030.0 | 0.665E-02 | 3.34 | 153.59 | 3.34 | 0.00 | .54939E+05 |
| 420.62 | 47.16 | 0.00 | 15145.1 | 0.660E-02 | 3.35 | 153.94 | 3.35 | 0.00 | .55147E+05 |
| 422.20 | 47.16 | 0.00 | 15260.8 | 0.655E-02 | 3.37 | 154.29 | 3.37 | 0.00 | .55355E+05 |
| 423.79 | 47.16 | 0.00 | 15377.0 | 0.650E-02 | 3.39 | 154.64 | 3.39 | 0.00 | .55564E+05 |
| 425.38 | 47.16 | 0.00 | 15493.8 | 0.645E-02 | 3.41 | 154.98 | 3.41 | 0.00 | .55772E+05 |
| 426.97 | 47.16 | 0.00 | 15611.1 | 0.641E-02 | 3.43 | 155.33 | 3.43 | 0.00 | .55980E+05 |
| 428.56 | 47.16 | 0.00 | 15728.9 | 0.636E-02 | 3.44 | 155.68 | 3.44 | 0.00 | .56188E+05 |
| 430.14 | 47.16 | 0.00 | 15847.3 | 0.631E-02 | 3.46 | 156.03 | 3.46 | 0.00 | .56397E+05 |
| 431.73 | 47.16 | 0.00 | 15966.2 | 0.626E-02 | 3.48 | 156.38 | 3.48 | 0.00 | .56605E+05 |
| 433.32 | 47.16 | 0.00 | 16085.6 | 0.622E-02 | 3.50 | 156.72 | 3.50 | 0.00 | .56813E+05 |
| 434.91 | 47.16 | 0.00 | 16205.6 | 0.617E-02 | 3.52 | 157.07 | 3.52 | 0.00 | .57021E+05 |
| 436.50 | 47.16 | 0.00 | 16326.1 | 0.613E-02 | 3.54 | 157.42 | 3.54 | 0.00 | .57230E+05 |
| 438.08 | 47.16 | 0.00 | 16447.1 | 0.608E-02 | 3.55 | 157.77 | 3.55 | 0.00 | .57438E+05 |
| 439.67 | 47.16 | 0.00 | 16568.7 | 0.604E-02 | 3.57 | 158.12 | 3.57 | 0.00 | .57646E+05 |
| 441.26 | 47.16 | 0.00 | 16690.9 | 0.599E-02 | 3.59 | 158.46 | 3.59 | 0.00 | .57854E+05 |
| 442.85 | 47.16 | 0.00 | 16813.5 | 0.595E-02 | 3.61 | 158.81 | 3.61 | 0.00 | .58063E+05 |
| 444.44 | 47.16 | 0.00 | 16936.8 | 0.590E-02 | 3.63 | 159.16 | 3.63 | 0.00 | .58271E+05 |
| 446.02 | 47.16 | 0.00 | 17060.5 | 0.586E-02 | 3.65 | 159.51 | 3.65 | 0.00 | .58479E+05 |
| 447.61 | 47.16 | 0.00 | 17184.9 | 0.582E-02 | 3.67 | 159.85 | 3.67 | 0.00 | .58687E+05 |
| 449.20 | 47.16 | 0.00 | 17309.7 | 0.578E-02 | 3.68 | 160.20 | 3.68 | 0.00 | .58896E+05 |
| 450.79 | 47.16 | 0.00 | 17435.1 | 0.574E-02 | 3.70 | 160.55 | 3.70 | 0.00 | .59104E+05 |

Cumulative travel time = 59103.8555 sec ( 16.42 hrs)
Plume is LATERALLY FULLY MIXED at the end of the buoyant spreading regime.

END OF MOD141: BUOYANT AMBIENT SPREADING

---

---

BEGIN MOD161: PASSIVE AMBIENT MIXING IN UNIFORM AMBIENT

Vertical diffusivity (initial value) = 0.216E-02 m^2/s
Horizontal diffusivity (initial value) = 0.108E-01 m^2/s

Profile definitions:
BV = Gaussian s.d.*sqrt(pi/2) (46%) thickness, measured vertically
= or equal to layer depth, if fully mixed
BH = Gaussian s.d.*sqrt(pi/2) (46%) half-width,
measured horizontally in Y-direction
ZU = upper plume boundary (Z-coordinate)
ZL = lower plume boundary (Z-coordinate)
S = hydrodynamic centerline dilution
C = centerline concentration (includes reaction effects, if any)
TT = Cumulative travel time

Plume Stage 2 (bank attached):

| X | Y | Z | S | C | BV | BH | ZU | ZL | TT |
|---|---|---|---|---|---|---|---|---|---|
| 450.79 | 47.16 | 0.00 | 17435.1 | 0.574E-02 | 3.70 | 160.55 | 3.70 | 0.00 | .59104E+05 |
| 473.54 | 47.16 | 0.00 | 18650.4 | 0.536E-02 | 3.96 | 160.55 | 3.96 | 0.00 | .62086E+05 |
| 496.28 | 47.16 | 0.00 | 19980.8 | 0.500E-02 | 4.24 | 160.55 | 4.24 | 0.00 | .65069E+05 |
| 519.03 | 47.16 | 0.00 | 21432.5 | 0.467E-02 | 4.55 | 160.55 | 4.55 | 0.00 | .68051E+05 |

Plume interacts with SURFACE.
The passive diffusion plume becomes VERTICALLY FULLY MIXED within this prediction interval.

| | | | | | | | | | |
|---|---|---|---|---|---|---|---|---|---|
| 541.77 | 47.16 | 0.00 | 22980.4 | 0.435E-02 | 4.88 | 160.55 | 4.88 | 0.00 | .71034E+05 |

Effluent is FULLY MIXED over the entire channel cross-section.
Except for possible far-field decay or reaction processes, there are NO FURTHER CHANGES with downstream direction.

| | | | | | | | | | |
|---|---|---|---|---|---|---|---|---|---|
| 564.52 | 47.16 | 0.00 | 22980.4 | 0.435E-02 | 4.88 | 160.55 | 4.88 | 0.00 | .74016E+05 |
| 587.27 | 47.16 | 0.00 | 22980.4 | 0.435E-02 | 4.88 | 160.55 | 4.88 | 0.00 | .76999E+05 |
| 610.01 | 47.16 | 0.00 | 22980.4 | 0.435E-02 | 4.88 | 160.55 | 4.88 | 0.00 | .79982E+05 |
| 632.76 | 47.16 | 0.00 | 22980.4 | 0.435E-02 | 4.88 | 160.55 | 4.88 | 0.00 | .82964E+05 |
| 655.50 | 47.16 | 0.00 | 22980.4 | 0.435E-02 | 4.88 | 160.55 | 4.88 | 0.00 | .85947E+05 |
| 678.25 | 47.16 | 0.00 | 22980.4 | 0.435E-02 | 4.88 | 160.55 | 4.88 | 0.00 | .88929E+05 |
| 701.00 | 47.16 | 0.00 | 22980.4 | 0.435E-02 | 4.88 | 160.55 | 4.88 | 0.00 | .91912E+05 |
| 723.74 | 47.16 | 0.00 | 22980.4 | 0.435E-02 | 4.88 | 160.55 | 4.88 | 0.00 | .94894E+05 |
| 746.49 | 47.16 | 0.00 | 22980.4 | 0.435E-02 | 4.88 | 160.55 | 4.88 | 0.00 | .97877E+05 |
| 769.23 | 47.16 | 0.00 | 22980.4 | 0.435E-02 | 4.88 | 160.55 | 4.88 | 0.00 | .10086E+06 |
| 791.98 | 47.16 | 0.00 | 22980.4 | 0.435E-02 | 4.88 | 160.55 | 4.88 | 0.00 | .10384E+06 |
| 814.73 | 47.16 | 0.00 | 22980.4 | 0.435E-02 | 4.88 | 160.55 | 4.88 | 0.00 | .10682E+06 |
| 837.47 | 47.16 | 0.00 | 22980.4 | 0.435E-02 | 4.88 | 160.55 | 4.88 | 0.00 | .10981E+06 |
| 860.22 | 47.16 | 0.00 | 22980.4 | 0.435E-02 | 4.88 | 160.55 | 4.88 | 0.00 | .11279E+06 |
| 882.96 | 47.16 | 0.00 | 22980.4 | 0.435E-02 | 4.88 | 160.55 | 4.88 | 0.00 | .11577E+06 |
| 905.71 | 47.16 | 0.00 | 22980.4 | 0.435E-02 | 4.88 | 160.55 | 4.88 | 0.00 | .11875E+06 |
| 928.46 | 47.16 | 0.00 | 22980.4 | 0.435E-02 | 4.88 | 160.55 | 4.88 | 0.00 | .12174E+06 |
| 951.20 | 47.16 | 0.00 | 22980.4 | 0.435E-02 | 4.88 | 160.55 | 4.88 | 0.00 | .12472E+06 |
| 973.95 | 47.16 | 0.00 | 22980.4 | 0.435E-02 | 4.88 | 160.55 | 4.88 | 0.00 | .12770E+06 |
| 996.69 | 47.16 | 0.00 | 22980.4 | 0.435E-02 | 4.88 | 160.55 | 4.88 | 0.00 | .13068E+06 |
| 1019.44 | 47.16 | 0.00 | 22980.4 | 0.435E-02 | 4.88 | 160.55 | 4.88 | 0.00 | .13367E+06 |
| 1042.19 | 47.16 | 0.00 | 22980.4 | 0.435E-02 | 4.88 | 160.55 | 4.88 | 0.00 | .13665E+06 |
| 1064.93 | 47.16 | 0.00 | 22980.4 | 0.435E-02 | 4.88 | 160.55 | 4.88 | 0.00 | .13963E+06 |
| 1087.68 | 47.16 | 0.00 | 22980.4 | 0.435E-02 | 4.88 | 160.55 | 4.88 | 0.00 | .14261E+06 |
| 1110.42 | 47.16 | 0.00 | 22980.4 | 0.435E-02 | 4.88 | 160.55 | 4.88 | 0.00 | .14560E+06 |
| 1133.17 | 47.16 | 0.00 | 22980.4 | 0.435E-02 | 4.88 | 160.55 | 4.88 | 0.00 | .14858E+06 |
| 1155.92 | 47.16 | 0.00 | 22980.4 | 0.435E-02 | 4.88 | 160.55 | 4.88 | 0.00 | .15156E+06 |
| 1178.66 | 47.16 | 0.00 | 22980.4 | 0.435E-02 | 4.88 | 160.55 | 4.88 | 0.00 | .15455E+06 |
| 1201.41 | 47.16 | 0.00 | 22980.4 | 0.435E-02 | 4.88 | 160.55 | 4.88 | 0.00 | .15753E+06 |
| 1224.15 | 47.16 | 0.00 | 22980.4 | 0.435E-02 | 4.88 | 160.55 | 4.88 | 0.00 | .16051E+06 |
| 1246.90 | 47.16 | 0.00 | 22980.4 | 0.435E-02 | 4.88 | 160.55 | 4.88 | 0.00 | .16349E+06 |
| 1269.65 | 47.16 | 0.00 | 22980.4 | 0.435E-02 | 4.88 | 160.55 | 4.88 | 0.00 | .16648E+06 |
| 1292.39 | 47.16 | 0.00 | 22980.4 | 0.435E-02 | 4.88 | 160.55 | 4.88 | 0.00 | .16946E+06 |
| 1315.14 | 47.16 | 0.00 | 22980.4 | 0.435E-02 | 4.88 | 160.55 | 4.88 | 0.00 | .17244E+06 |
| 1337.89 | 47.16 | 0.00 | 22980.4 | 0.435E-02 | 4.88 | 160.55 | 4.88 | 0.00 | .17542E+06 |
| 1360.63 | 47.16 | 0.00 | 22980.4 | 0.435E-02 | 4.88 | 160.55 | 4.88 | 0.00 | .17841E+06 |
| 1383.38 | 47.16 | 0.00 | 22980.4 | 0.435E-02 | 4.88 | 160.55 | 4.88 | 0.00 | .18139E+06 |
| 1406.12 | 47.16 | 0.00 | 22980.4 | 0.435E-02 | 4.88 | 160.55 | 4.88 | 0.00 | .18437E+06 |
| 1428.87 | 47.16 | 0.00 | 22980.4 | 0.435E-02 | 4.88 | 160.55 | 4.88 | 0.00 | .18735E+06 |
| 1451.62 | 47.16 | 0.00 | 22980.4 | 0.435E-02 | 4.88 | 160.55 | 4.88 | 0.00 | .19034E+06 |
| 1474.36 | 47.16 | 0.00 | 22980.4 | 0.435E-02 | 4.88 | 160.55 | 4.88 | 0.00 | .19332E+06 |
| 1497.11 | 47.16 | 0.00 | 22980.4 | 0.435E-02 | 4.88 | 160.55 | 4.88 | 0.00 | .19630E+06 |

| | | | | | | | | | |
|---|---|---|---|---|---|---|---|---|---|
| 1519.85 | 47.16 | 0.00 | 22980.4 | 0.435E-02 | 4.88 | 160.55 | 4.88 | 0.00 | .19928E+06 |
| 1542.60 | 47.16 | 0.00 | 22980.4 | 0.435E-02 | 4.88 | 160.55 | 4.88 | 0.00 | .20227E+06 |
| 1565.35 | 47.16 | 0.00 | 22980.4 | 0.435E-02 | 4.88 | 160.55 | 4.88 | 0.00 | .20525E+06 |
| 1588.09 | 47.16 | 0.00 | 22980.4 | 0.435E-02 | 4.88 | 160.55 | 4.88 | 0.00 | .20823E+06 |
| 1610.84 | 47.16 | 0.00 | 22980.4 | 0.435E-02 | 4.88 | 160.55 | 4.88 | 0.00 | .21121E+06 |
| 1633.58 | 47.16 | 0.00 | 22980.4 | 0.435E-02 | 4.88 | 160.55 | 4.88 | 0.00 | .21420E+06 |
| 1656.33 | 47.16 | 0.00 | 22980.4 | 0.435E-02 | 4.88 | 160.55 | 4.88 | 0.00 | .21718E+06 |
| 1679.08 | 47.16 | 0.00 | 22980.4 | 0.435E-02 | 4.88 | 160.55 | 4.88 | 0.00 | .22016E+06 |
| 1701.82 | 47.16 | 0.00 | 22980.4 | 0.435E-02 | 4.88 | 160.55 | 4.88 | 0.00 | .22314E+06 |
| 1724.57 | 47.16 | 0.00 | 22980.4 | 0.435E-02 | 4.88 | 160.55 | 4.88 | 0.00 | .22613E+06 |
| 1747.32 | 47.16 | 0.00 | 22980.4 | 0.435E-02 | 4.88 | 160.55 | 4.88 | 0.00 | .22911E+06 |
| 1770.06 | 47.16 | 0.00 | 22980.4 | 0.435E-02 | 4.88 | 160.55 | 4.88 | 0.00 | .23209E+06 |
| 1792.81 | 47.16 | 0.00 | 22980.4 | 0.435E-02 | 4.88 | 160.55 | 4.88 | 0.00 | .23507E+06 |
| 1815.55 | 47.16 | 0.00 | 22980.4 | 0.435E-02 | 4.88 | 160.55 | 4.88 | 0.00 | .23806E+06 |
| 1838.30 | 47.16 | 0.00 | 22980.4 | 0.435E-02 | 4.88 | 160.55 | 4.88 | 0.00 | .24104E+06 |
| 1861.05 | 47.16 | 0.00 | 22980.4 | 0.435E-02 | 4.88 | 160.55 | 4.88 | 0.00 | .24402E+06 |
| 1883.79 | 47.16 | 0.00 | 22980.4 | 0.435E-02 | 4.88 | 160.55 | 4.88 | 0.00 | .24700E+06 |
| 1906.54 | 47.16 | 0.00 | 22980.4 | 0.435E-02 | 4.88 | 160.55 | 4.88 | 0.00 | .24999E+06 |
| 1929.28 | 47.16 | 0.00 | 22980.4 | 0.435E-02 | 4.88 | 160.55 | 4.88 | 0.00 | .25297E+06 |
| 1952.03 | 47.16 | 0.00 | 22980.4 | 0.435E-02 | 4.88 | 160.55 | 4.88 | 0.00 | .25595E+06 |
| 1974.78 | 47.16 | 0.00 | 22980.4 | 0.435E-02 | 4.88 | 160.55 | 4.88 | 0.00 | .25893E+06 |
| 1997.52 | 47.16 | 0.00 | 22980.4 | 0.435E-02 | 4.88 | 160.55 | 4.88 | 0.00 | .26192E+06 |
| 2020.27 | 47.16 | 0.00 | 22980.4 | 0.435E-02 | 4.88 | 160.55 | 4.88 | 0.00 | .26490E+06 |
| 2043.01 | 47.16 | 0.00 | 22980.4 | 0.435E-02 | 4.88 | 160.55 | 4.88 | 0.00 | .26788E+06 |
| 2065.76 | 47.16 | 0.00 | 22980.4 | 0.435E-02 | 4.88 | 160.55 | 4.88 | 0.00 | .27086E+06 |
| 2088.51 | 47.16 | 0.00 | 22980.4 | 0.435E-02 | 4.88 | 160.55 | 4.88 | 0.00 | .27385E+06 |
| 2111.25 | 47.16 | 0.00 | 22980.4 | 0.435E-02 | 4.88 | 160.55 | 4.88 | 0.00 | .27683E+06 |
| 2134.00 | 47.16 | 0.00 | 22980.4 | 0.435E-02 | 4.88 | 160.55 | 4.88 | 0.00 | .27981E+06 |
| 2156.74 | 47.16 | 0.00 | 22980.4 | 0.435E-02 | 4.88 | 160.55 | 4.88 | 0.00 | .28279E+06 |
| 2179.49 | 47.16 | 0.00 | 22980.4 | 0.435E-02 | 4.88 | 160.55 | 4.88 | 0.00 | .28578E+06 |
| 2202.24 | 47.16 | 0.00 | 22980.4 | 0.435E-02 | 4.88 | 160.55 | 4.88 | 0.00 | .28876E+06 |
| 2224.98 | 47.16 | 0.00 | 22980.4 | 0.435E-02 | 4.88 | 160.55 | 4.88 | 0.00 | .29174E+06 |
| 2247.73 | 47.16 | 0.00 | 22980.4 | 0.435E-02 | 4.88 | 160.55 | 4.88 | 0.00 | .29472E+06 |
| 2270.48 | 47.16 | 0.00 | 22980.4 | 0.435E-02 | 4.88 | 160.55 | 4.88 | 0.00 | .29771E+06 |
| 2293.22 | 47.16 | 0.00 | 22980.4 | 0.435E-02 | 4.88 | 160.55 | 4.88 | 0.00 | .30069E+06 |
| 2315.97 | 47.16 | 0.00 | 22980.4 | 0.435E-02 | 4.88 | 160.55 | 4.88 | 0.00 | .30367E+06 |
| 2338.71 | 47.16 | 0.00 | 22980.4 | 0.435E-02 | 4.88 | 160.55 | 4.88 | 0.00 | .30666E+06 |
| 2361.46 | 47.16 | 0.00 | 22980.4 | 0.435E-02 | 4.88 | 160.55 | 4.88 | 0.00 | .30964E+06 |
| 2384.21 | 47.16 | 0.00 | 22980.4 | 0.435E-02 | 4.88 | 160.55 | 4.88 | 0.00 | .31262E+06 |
| 2406.95 | 47.16 | 0.00 | 22980.4 | 0.435E-02 | 4.88 | 160.55 | 4.88 | 0.00 | .31560E+06 |
| 2429.70 | 47.16 | 0.00 | 22980.4 | 0.435E-02 | 4.88 | 160.55 | 4.88 | 0.00 | .31859E+06 |
| 2452.44 | 47.16 | 0.00 | 22980.4 | 0.435E-02 | 4.88 | 160.55 | 4.88 | 0.00 | .32157E+06 |
| 2475.19 | 47.16 | 0.00 | 22980.4 | 0.435E-02 | 4.88 | 160.55 | 4.88 | 0.00 | .32455E+06 |
| 2497.94 | 47.16 | 0.00 | 22980.4 | 0.435E-02 | 4.88 | 160.55 | 4.88 | 0.00 | .32753E+06 |
| 2520.68 | 47.16 | 0.00 | 22980.4 | 0.435E-02 | 4.88 | 160.55 | 4.88 | 0.00 | .33052E+06 |
| 2543.43 | 47.16 | 0.00 | 22980.4 | 0.435E-02 | 4.88 | 160.55 | 4.88 | 0.00 | .33350E+06 |
| 2566.17 | 47.16 | 0.00 | 22980.4 | 0.435E-02 | 4.88 | 160.55 | 4.88 | 0.00 | .33648E+06 |
| 2588.92 | 47.16 | 0.00 | 22980.4 | 0.435E-02 | 4.88 | 160.55 | 4.88 | 0.00 | .33946E+06 |
| 2611.67 | 47.16 | 0.00 | 22980.4 | 0.435E-02 | 4.88 | 160.55 | 4.88 | 0.00 | .34245E+06 |
| 2634.41 | 47.16 | 0.00 | 22980.4 | 0.435E-02 | 4.88 | 160.55 | 4.88 | 0.00 | .34543E+06 |
| 2657.16 | 47.16 | 0.00 | 22980.4 | 0.435E-02 | 4.88 | 160.55 | 4.88 | 0.00 | .34841E+06 |
| 2679.90 | 47.16 | 0.00 | 22980.4 | 0.435E-02 | 4.88 | 160.55 | 4.88 | 0.00 | .35139E+06 |
| 2702.65 | 47.16 | 0.00 | 22980.4 | 0.435E-02 | 4.88 | 160.55 | 4.88 | 0.00 | .35438E+06 |
| 2725.40 | 47.16 | 0.00 | 22980.4 | 0.435E-02 | 4.88 | 160.55 | 4.88 | 0.00 | .35736E+06 |
| 2748.14 | 47.16 | 0.00 | 22980.4 | 0.435E-02 | 4.88 | 160.55 | 4.88 | 0.00 | .36034E+06 |
| 2770.89 | 47.16 | 0.00 | 22980.4 | 0.435E-02 | 4.88 | 160.55 | 4.88 | 0.00 | .36332E+06 |
| 2793.64 | 47.16 | 0.00 | 22980.4 | 0.435E-02 | 4.88 | 160.55 | 4.88 | 0.00 | .36631E+06 |
| 2816.38 | 47.16 | 0.00 | 22980.4 | 0.435E-02 | 4.88 | 160.55 | 4.88 | 0.00 | .36929E+06 |
| 2839.13 | 47.16 | 0.00 | 22980.4 | 0.435E-02 | 4.88 | 160.55 | 4.88 | 0.00 | .37227E+06 |
| 2861.87 | 47.16 | 0.00 | 22980.4 | 0.435E-02 | 4.88 | 160.55 | 4.88 | 0.00 | .37525E+06 |
| 2884.62 | 47.16 | 0.00 | 22980.4 | 0.435E-02 | 4.88 | 160.55 | 4.88 | 0.00 | .37824E+06 |
| 2907.37 | 47.16 | 0.00 | 22980.4 | 0.435E-02 | 4.88 | 160.55 | 4.88 | 0.00 | .38122E+06 |
| 2930.11 | 47.16 | 0.00 | 22980.4 | 0.435E-02 | 4.88 | 160.55 | 4.88 | 0.00 | .38420E+06 |
| 2952.86 | 47.16 | 0.00 | 22980.4 | 0.435E-02 | 4.88 | 160.55 | 4.88 | 0.00 | .38718E+06 |
| 2975.60 | 47.16 | 0.00 | 22980.4 | 0.435E-02 | 4.88 | 160.55 | 4.88 | 0.00 | .39017E+06 |
| 2998.35 | 47.16 | 0.00 | 22980.4 | 0.435E-02 | 4.88 | 160.55 | 4.88 | 0.00 | .39315E+06 |
| 3021.10 | 47.16 | 0.00 | 22980.4 | 0.435E-02 | 4.88 | 160.55 | 4.88 | 0.00 | .39613E+06 |
| 3043.84 | 47.16 | 0.00 | 22980.4 | 0.435E-02 | 4.88 | 160.55 | 4.88 | 0.00 | .39911E+06 |
| 3066.59 | 47.16 | 0.00 | 22980.4 | 0.435E-02 | 4.88 | 160.55 | 4.88 | 0.00 | .40210E+06 |
| 3089.33 | 47.16 | 0.00 | 22980.4 | 0.435E-02 | 4.88 | 160.55 | 4.88 | 0.00 | .40508E+06 |

| | | | | | | | | | |
|---|---|---|---|---|---|---|---|---|---|
| 3112.08 | 47.16 | 0.00 | 22980.4 | 0.435E-02 | 4.88 | 160.55 | 4.88 | 0.00 | .40806E+06 |
| 3134.83 | 47.16 | 0.00 | 22980.4 | 0.435E-02 | 4.88 | 160.55 | 4.88 | 0.00 | .41104E+06 |
| 3157.57 | 47.16 | 0.00 | 22980.4 | 0.435E-02 | 4.88 | 160.55 | 4.88 | 0.00 | .41403E+06 |
| 3180.32 | 47.16 | 0.00 | 22980.4 | 0.435E-02 | 4.88 | 160.55 | 4.88 | 0.00 | .41701E+06 |
| 3203.06 | 47.16 | 0.00 | 22980.4 | 0.435E-02 | 4.88 | 160.55 | 4.88 | 0.00 | .41999E+06 |
| 3225.81 | 47.16 | 0.00 | 22980.4 | 0.435E-02 | 4.88 | 160.55 | 4.88 | 0.00 | .42297E+06 |
| 3248.56 | 47.16 | 0.00 | 22980.4 | 0.435E-02 | 4.88 | 160.55 | 4.88 | 0.00 | .42596E+06 |
| 3271.30 | 47.16 | 0.00 | 22980.4 | 0.435E-02 | 4.88 | 160.55 | 4.88 | 0.00 | .42894E+06 |
| 3294.05 | 47.16 | 0.00 | 22980.4 | 0.435E-02 | 4.88 | 160.55 | 4.88 | 0.00 | .43192E+06 |
| 3316.80 | 47.16 | 0.00 | 22980.4 | 0.435E-02 | 4.88 | 160.55 | 4.88 | 0.00 | .43490E+06 |
| 3339.54 | 47.16 | 0.00 | 22980.4 | 0.435E-02 | 4.88 | 160.55 | 4.88 | 0.00 | .43789E+06 |
| 3362.29 | 47.16 | 0.00 | 22980.4 | 0.435E-02 | 4.88 | 160.55 | 4.88 | 0.00 | .44087E+06 |
| 3385.03 | 47.16 | 0.00 | 22980.4 | 0.435E-02 | 4.88 | 160.55 | 4.88 | 0.00 | .44385E+06 |
| 3407.78 | 47.16 | 0.00 | 22980.4 | 0.435E-02 | 4.88 | 160.55 | 4.88 | 0.00 | .44683E+06 |
| 3430.53 | 47.16 | 0.00 | 22980.4 | 0.435E-02 | 4.88 | 160.55 | 4.88 | 0.00 | .44982E+06 |
| 3453.27 | 47.16 | 0.00 | 22980.4 | 0.435E-02 | 4.88 | 160.55 | 4.88 | 0.00 | .45280E+06 |
| 3476.02 | 47.16 | 0.00 | 22980.4 | 0.435E-02 | 4.88 | 160.55 | 4.88 | 0.00 | .45578E+06 |
| 3498.76 | 47.16 | 0.00 | 22980.4 | 0.435E-02 | 4.88 | 160.55 | 4.88 | 0.00 | .45876E+06 |
| 3521.51 | 47.16 | 0.00 | 22980.4 | 0.435E-02 | 4.88 | 160.55 | 4.88 | 0.00 | .46175E+06 |
| 3544.26 | 47.16 | 0.00 | 22980.4 | 0.435E-02 | 4.88 | 160.55 | 4.88 | 0.00 | .46473E+06 |
| 3567.00 | 47.16 | 0.00 | 22980.4 | 0.435E-02 | 4.88 | 160.55 | 4.88 | 0.00 | .46771E+06 |
| 3589.75 | 47.16 | 0.00 | 22980.4 | 0.435E-02 | 4.88 | 160.55 | 4.88 | 0.00 | .47070E+06 |
| 3612.49 | 47.16 | 0.00 | 22980.4 | 0.435E-02 | 4.88 | 160.55 | 4.88 | 0.00 | .47368E+06 |
| 3635.24 | 47.16 | 0.00 | 22980.4 | 0.435E-02 | 4.88 | 160.55 | 4.88 | 0.00 | .47666E+06 |
| 3657.99 | 47.16 | 0.00 | 22980.4 | 0.435E-02 | 4.88 | 160.55 | 4.88 | 0.00 | .47964E+06 |
| 3680.73 | 47.16 | 0.00 | 22980.4 | 0.435E-02 | 4.88 | 160.55 | 4.88 | 0.00 | .48263E+06 |
| 3703.48 | 47.16 | 0.00 | 22980.4 | 0.435E-02 | 4.88 | 160.55 | 4.88 | 0.00 | .48561E+06 |
| 3726.23 | 47.16 | 0.00 | 22980.4 | 0.435E-02 | 4.88 | 160.55 | 4.88 | 0.00 | .48859E+06 |
| 3748.97 | 47.16 | 0.00 | 22980.4 | 0.435E-02 | 4.88 | 160.55 | 4.88 | 0.00 | .49157E+06 |
| 3771.72 | 47.16 | 0.00 | 22980.4 | 0.435E-02 | 4.88 | 160.55 | 4.88 | 0.00 | .49456E+06 |
| 3794.46 | 47.16 | 0.00 | 22980.4 | 0.435E-02 | 4.88 | 160.55 | 4.88 | 0.00 | .49754E+06 |
| 3817.21 | 47.16 | 0.00 | 22980.4 | 0.435E-02 | 4.88 | 160.55 | 4.88 | 0.00 | .50052E+06 |
| 3839.96 | 47.16 | 0.00 | 22980.4 | 0.435E-02 | 4.88 | 160.55 | 4.88 | 0.00 | .50350E+06 |
| 3862.70 | 47.16 | 0.00 | 22980.4 | 0.435E-02 | 4.88 | 160.55 | 4.88 | 0.00 | .50649E+06 |
| 3885.45 | 47.16 | 0.00 | 22980.4 | 0.435E-02 | 4.88 | 160.55 | 4.88 | 0.00 | .50947E+06 |
| 3908.19 | 47.16 | 0.00 | 22980.4 | 0.435E-02 | 4.88 | 160.55 | 4.88 | 0.00 | .51245E+06 |
| 3930.94 | 47.16 | 0.00 | 22980.4 | 0.435E-02 | 4.88 | 160.55 | 4.88 | 0.00 | .51543E+06 |
| 3953.69 | 47.16 | 0.00 | 22980.4 | 0.435E-02 | 4.88 | 160.55 | 4.88 | 0.00 | .51842E+06 |
| 3976.43 | 47.16 | 0.00 | 22980.4 | 0.435E-02 | 4.88 | 160.55 | 4.88 | 0.00 | .52140E+06 |
| 3999.18 | 47.16 | 0.00 | 22980.4 | 0.435E-02 | 4.88 | 160.55 | 4.88 | 0.00 | .52438E+06 |
| 4021.92 | 47.16 | 0.00 | 22980.4 | 0.435E-02 | 4.88 | 160.55 | 4.88 | 0.00 | .52736E+06 |
| 4044.67 | 47.16 | 0.00 | 22980.4 | 0.435E-02 | 4.88 | 160.55 | 4.88 | 0.00 | .53035E+06 |
| 4067.42 | 47.16 | 0.00 | 22980.4 | 0.435E-02 | 4.88 | 160.55 | 4.88 | 0.00 | .53333E+06 |
| 4090.16 | 47.16 | 0.00 | 22980.4 | 0.435E-02 | 4.88 | 160.55 | 4.88 | 0.00 | .53631E+06 |
| 4112.91 | 47.16 | 0.00 | 22980.4 | 0.435E-02 | 4.88 | 160.55 | 4.88 | 0.00 | .53929E+06 |
| 4135.65 | 47.16 | 0.00 | 22980.4 | 0.435E-02 | 4.88 | 160.55 | 4.88 | 0.00 | .54228E+06 |
| 4158.40 | 47.16 | 0.00 | 22980.4 | 0.435E-02 | 4.88 | 160.55 | 4.88 | 0.00 | .54526E+06 |
| 4181.15 | 47.16 | 0.00 | 22980.4 | 0.435E-02 | 4.88 | 160.55 | 4.88 | 0.00 | .54824E+06 |
| 4203.89 | 47.16 | 0.00 | 22980.4 | 0.435E-02 | 4.88 | 160.55 | 4.88 | 0.00 | .55122E+06 |
| 4226.64 | 47.16 | 0.00 | 22980.4 | 0.435E-02 | 4.88 | 160.55 | 4.88 | 0.00 | .55421E+06 |
| 4249.39 | 47.16 | 0.00 | 22980.4 | 0.435E-02 | 4.88 | 160.55 | 4.88 | 0.00 | .55719E+06 |
| 4272.13 | 47.16 | 0.00 | 22980.4 | 0.435E-02 | 4.88 | 160.55 | 4.88 | 0.00 | .56017E+06 |
| 4294.88 | 47.16 | 0.00 | 22980.4 | 0.435E-02 | 4.88 | 160.55 | 4.88 | 0.00 | .56315E+06 |
| 4317.62 | 47.16 | 0.00 | 22980.4 | 0.435E-02 | 4.88 | 160.55 | 4.88 | 0.00 | .56614E+06 |
| 4340.37 | 47.16 | 0.00 | 22980.4 | 0.435E-02 | 4.88 | 160.55 | 4.88 | 0.00 | .56912E+06 |
| 4363.12 | 47.16 | 0.00 | 22980.4 | 0.435E-02 | 4.88 | 160.55 | 4.88 | 0.00 | .57210E+06 |
| 4385.86 | 47.16 | 0.00 | 22980.4 | 0.435E-02 | 4.88 | 160.55 | 4.88 | 0.00 | .57508E+06 |
| 4408.61 | 47.16 | 0.00 | 22980.4 | 0.435E-02 | 4.88 | 160.55 | 4.88 | 0.00 | .57807E+06 |
| 4431.35 | 47.16 | 0.00 | 22980.4 | 0.435E-02 | 4.88 | 160.55 | 4.88 | 0.00 | .58105E+06 |
| 4454.10 | 47.16 | 0.00 | 22980.4 | 0.435E-02 | 4.88 | 160.55 | 4.88 | 0.00 | .58403E+06 |
| 4476.85 | 47.16 | 0.00 | 22980.4 | 0.435E-02 | 4.88 | 160.55 | 4.88 | 0.00 | .58701E+06 |
| 4499.59 | 47.16 | 0.00 | 22980.4 | 0.435E-02 | 4.88 | 160.55 | 4.88 | 0.00 | .59000E+06 |
| 4522.34 | 47.16 | 0.00 | 22980.4 | 0.435E-02 | 4.88 | 160.55 | 4.88 | 0.00 | .59298E+06 |
| 4545.08 | 47.16 | 0.00 | 22980.4 | 0.435E-02 | 4.88 | 160.55 | 4.88 | 0.00 | .59596E+06 |
| 4567.83 | 47.16 | 0.00 | 22980.4 | 0.435E-02 | 4.88 | 160.55 | 4.88 | 0.00 | .59894E+06 |
| 4590.58 | 47.16 | 0.00 | 22980.4 | 0.435E-02 | 4.88 | 160.55 | 4.88 | 0.00 | .60193E+06 |
| 4613.32 | 47.16 | 0.00 | 22980.4 | 0.435E-02 | 4.88 | 160.55 | 4.88 | 0.00 | .60491E+06 |
| 4636.07 | 47.16 | 0.00 | 22980.4 | 0.435E-02 | 4.88 | 160.55 | 4.88 | 0.00 | .60789E+06 |
| 4658.81 | 47.16 | 0.00 | 22980.4 | 0.435E-02 | 4.88 | 160.55 | 4.88 | 0.00 | .61087E+06 |
| 4681.56 | 47.16 | 0.00 | 22980.4 | 0.435E-02 | 4.88 | 160.55 | 4.88 | 0.00 | .61386E+06 |

```
   4704.31    47.16    0.00 22980.4 0.435E-02   4.88   160.55    4.88    0.00 .61684E+06
   4727.05    47.16    0.00 22980.4 0.435E-02   4.88   160.55    4.88    0.00 .61982E+06
   4749.80    47.16    0.00 22980.4 0.435E-02   4.88   160.55    4.88    0.00 .62281E+06
   4772.55    47.16    0.00 22980.4 0.435E-02   4.88   160.55    4.88    0.00 .62579E+06
   4795.29    47.16    0.00 22980.4 0.435E-02   4.88   160.55    4.88    0.00 .62877E+06
   4818.04    47.16    0.00 22980.4 0.435E-02   4.88   160.55    4.88    0.00 .63175E+06
   4840.78    47.16    0.00 22980.4 0.435E-02   4.88   160.55    4.88    0.00 .63474E+06
   4863.53    47.16    0.00 22980.4 0.435E-02   4.88   160.55    4.88    0.00 .63772E+06
   4886.28    47.16    0.00 22980.4 0.435E-02   4.88   160.55    4.88    0.00 .64070E+06
   4909.02    47.16    0.00 22980.4 0.435E-02   4.88   160.55    4.88    0.00 .64368E+06
   4931.77    47.16    0.00 22980.4 0.435E-02   4.88   160.55    4.88    0.00 .64667E+06
   4954.51    47.16    0.00 22980.4 0.435E-02   4.88   160.55    4.88    0.00 .64965E+06
   4977.26    47.16    0.00 22980.4 0.435E-02   4.88   160.55    4.88    0.00 .65263E+06
   5000.01    47.16    0.00 22980.4 0.435E-02   4.88   160.55    4.88    0.00 .65561E+06
 Cumulative travel time =      655612.3125 sec  (  182.11 hrs)

 Simulation limit based on maximum specified distance =   5000.00 m.
   This is the REGION OF INTEREST limitation.

END OF MOD161: PASSIVE AMBIENT MIXING IN UNIFORM AMBIENT
-----------------------------------------------------------------------------------------------
-----------------------------------------------------------------------------------------------
CORMIX1: Single Port Discharges              End of Prediction File
11111111111111111111111111111111111111111111111111111111111111111111111111111111111111111111111
```

# Appendix B:

# ADEM Form 455 and Accompanying Documents

# REQUIRED INFORMATION FOR MIXING ZONE MODELING

## GENERAL INFORMATION

1. Applicant Name: PGP Operating, LLC
2. Permit No.: AL0056791
3. Project Name (if different from applicant): Maxwell Crossing
4. Contact name and phone number: Phillip Dunn (205) 554-3129
5. Date submitted: _____
5. Facility type (new, existing or upgrade): Existing

## AMBIENT CONDITIONS

1. Receiving waterbody: Black Warrior River
2. Width of waterbody at discharge point (m): 160.55
3. Depth of waterbody at discharge point (m): 4.88
4. Average depth of waterbody at discharge point (m): 4.88

**DISCHARGE TYPE:**

Submerged endpipe or submerged multiport diffuser? Submerged Multiport

Effluent Density ($kg/m^3$): 1005

**Note:** Fill out box A below for endpipe discharges; box B for diffuser discharges.

## A. DISCHARGE CONDITIONS FOR SUBMERGED ENDPIPE DISCHARGES

1. Nearest bank (right or left) to the outfall looking downstream: _____
2. Distance from nearest bank to discharge (m): _____
3. Endpipe diameter (m): _____ 4. Contraction ratio (if known): _____
5. Height of discharge above stream bottom (m): _____
6. Effluent flow rate (mgd): _____

## B. DISCHARGE CONDITIONS FOR SUBMERGED MULTIPORT DIFFUSERS

**NOTE:**
Diffuser length is defined as the distance between the first and last diffuser ports.

1. Diffuser length (m): 65.87
2. Nearest bank (right or left) to the outfall looking downstream: Left
3. Distance from nearest bank to first diffuser port (m): 47.16
4. Total number of ports: 12 5. Diameter of a single port (m): 0.0508
6. Distance between adjacent ports (i.e., port spacing, m): 6.1
7. Height of ports above stream bottom (m): 0.91
8. Port contraction ratio (if known): 0.9
9. Diameter of diffuser manifold (m): 0.3048
10. Effluent flow rate (mgd): 0.0705

## SPECIAL REQUIREMENTS

1. Please submit a map displaying the outfall location along with the appropriate latitude/longitude coordinates.
2. Please submit the appropriate engineering plans that depict the outfall configuration.

# CORMIX Data Input Form

## Project Legend

| | | | |
|---|---|---|---|
| Site Name: | PGP Operating, LLC - Maxwell Crossing - CMX2 | | |
| Design Case: | Avg. Effluent Data, Min. Ambient Data - As Built | | |
| Prepared By: | CFM Group | Date: | 5/9/2014 |

## Effluent Data

☑ **Non-Fresh Water Effluent Density** — Density $\rho_o$: 1005 kg/m$^3$

☐ **Fresh Water Effluent Density** — ☐ Temperature $T_o$: °C ☐ Density $\rho_o$: kg/m$^3$

Discharge Excess Concentration: 100 % ☑ Effluent Flow Rate $Q_o$: 0.0031 m$^3$/s ☐ Effluent Velocity $U_o$: m/s

**Pollutant Types**

☑ Conservative ☐ Non Conservative: /day ☐ Heated - Heat Loss Coefficient W/m$^2$/°C

☐ **Brine** ☐ **Sediment:** Chunks % Sand % Coarse Silt % Clay %

Total Sediment Concentration: kg/m$^3$ Fine Silt %

## Ambient Geometry / Flow Field Data

**Average Depth $H_a$:** 4.88 m ☐ **Unbounded** ☑ **Bounded:** Width: 160.55 m

**Depth at Discharge $H_d$:** 4.88 m Appearance: ☐ Uniform ☐ Slight Meander ☐ Highly Irregular

☑ **Steady**
- ☑ Ambient Flowrate $Q_a$: 7.957 m$^3$/s
- ☐ Ambient Velocity $U_a$: m/s

☐ **Unsteady**
- Period hr Max Velocity m/s Tidal Velocity at this time $U_a$: m/s
- ☐ At Time: hr ☐ At Slack - ΔTime: hr ☐ At Time: hr After Slack

☐ **Single Slope**
- Slope S: %
- Near Shore Velocity m/s
- Near Shore Darcy-Weisbach f

☐ **Near and Far Slope**
- ☐ Near Shore Slope $S_1$: % ☐ Far Slope $S_2$: %
- ☐ Near Shore Velocity $U_{a1}$: m/s ☐ Far Shore Velocity $U_{a2}$: m/s
- ☐ Near Shore Darcy-Weisbach $f_1$: ☐ Far Shore Darcy-Weisbach $f_2$:
- ☐ Breakpoint: m

☑ Manning's n: 0.032 Wind Speed: 2.0 m/s

## Ambient Density Data

☑ **Uniform** ☑ **Fresh Water:** ☑ Temperature 32.2 °C ☐ Density $\rho_a$: kg/m$^3$ ☐ **Non Fresh:** Density $\rho_a$: kg/m$^3$

☐ **Stratified** ☐ **Type A** ☐ **Type B**: Pycnocline Height m ☐ **Type C**: Pycnocline Height m Jump kg/m$^3$/°C

☐ **Brine and Sediment Only** Density $\rho$: At Surface $\rho_{as}$: kg/m$^3$/°C At Bottom $\rho_{ab}$: kg/m$^3$/°C

Level 1 Density $\rho_1$: kg/m$^3$/°C Sub 1: m Level 2 Density $\rho_2$: kg/m$^3$/°C Sub 2: m

## Discharge Geometry Data

### CORMIX 1 - Single Port

Nearest Bank: ☐ Left ☐ Right

Distance to Nearest Bank m

Verticle angle $\theta_0$: °

Horizontal Angle $\sigma_0$: °

☐ Port Diameter $D_0$: m

☐ Port Area $A_0$: m$^2$

**Submerged**

Port Height above bottom $h_0$: m

**Above Surface**

Port Height above surface: m

☐ Jet - Like ☐ Spray

☐ Area

Deflector Plate:

☐ Without ☐ With

### CORMIX 2 - Multiport

Nearest Bank: ☑ Left ☐ Right

Orientation:

☐ Unidirectional ☐ Staged

☑ Alternating / Vertical

Number of Openings: 12 Diffuser Length: 65.87 m

Distance to 1st end point $YB_1$: 47.16 m

Distance to 2nd end point $YB_2$: 106.90 m

Port Height $h_0$: 0.9144 m Port Diameter $D_0$: 0.0508 m

Contraction Ratio 0.9

**Angles**

Vertical Angle θ: 90 ° Horizontal Angle σ: - °

Alignment Angle γ: 115 °

Relative Orientation Angle β: 90 °

Nozzel Direction:

☑ Same ☐ Fanned Out

### CORMIX 3 - Surface Discharge

Discharge Located: ☐ Left ☐ Right

Horizontal Angle σ: °

Local Depth at Discharge Outlet: m

☐ **Flush** ☐ **Co-flowing**

☐ **Protruding:**

Distance from Bank m

**Discharge Outlet**

☐ **Channel**

Width m

Depth $b_0$: m

☐ **Pipe** Diameter $D_0$: m

Bottom Invert Depth m

Local Bottom Slope at Channel Entry

°

## Mixing Zone Data Inputs

☑ **Non -Toxic effluent**

☑ Water Qualtity Standard: ☐ Chronic 175.7 mg/L ☑ Acute 805.7 mg/L ☐ No Water Quality Standard

☐ **Toxic effluent**

Criterion Continuous Concentration: Criterion Maximum Concentration:

☑ **Maximum Mixing Zone Boundaries**

☐ Trajectory: m ☑ Distance Downstream: 401.37 m ☑ Width: 80.27 m

☑ Area: 195.74 m$^2$

Region of Interest: 5000 m

Number of Output Steps 200

Prepared By:

**CFM Group** — **Civil and Environmental Engineers, Scientists, Planners, and Surveyors**

# CORMIX Data Input Form

## Project Legend

| | | | |
|---|---|---|---|
| Site Name: | PGP Operating, LLC - Maxwell Crossing - CMX1 | | |
| Design Case: | Avg. Effluent Data, Min. Ambient Data - As Built | | |
| Prepared By: | CFM Group | Date: | 5/9/2014 |

## Effluent Data

☑ **Non-Fresh Water Effluent Density** — Density $\rho_o$: 1005 kg/m$^3$

☐ **Fresh Water Effluent Density** — ☐ Temperature $T_o$: °C ☐ Density $\rho_o$: kg/m$^3$

Discharge Excess Concentration: 100 % ☑ Effluent Flow Rate $Q_o$: 0.00026 m$^3$/s ☐ Effluent Velocity $U_o$: m/s

**Pollutant Types**

☑ Conservative ☐ Non Conservative: /day ☐ Heated - Heat Loss Coefficient W/m$^2$/°C

☐ **Brine** ☐ **Sediment:** Chunks % Sand % Coarse Silt % Clay %

Total Sediment Concentration: kg/m$^3$ Fine Silt %

## Ambient Geometry / Flow Field Data

**Average Depth $H_a$:** 4.88 m ☐ **Unbounded** ☑ **Bounded:** Width: 160.55 m

**Depth at Discharge $H_d$:** 4.88 m Appearance: ☐ Uniform ☐ Slight Meander ☐ Highly Irregular

☑ **Steady**
- ☑ Ambient Flowrate $Q_a$: 5.975 m$^3$/s
- ☐ Ambient Velocity $U_a$: m/s

☐ **Unsteady**
- Period hr Max Velocity m/s Tidal Velocity at this time $U_a$: m/s
- ☐ At Time: hr ☐ At Slack - ΔTime: hr ☐ At Time: hr After Slack

☐ **Single Slope**
- Slope S: %
- Near Shore Velocity m/s
- Near Shore Darcy-Weisbach f

☐ **Near and Far Slope**
- ☐ Near Shore Slope $S_1$: % ☐ Far Slope $S_2$: %
- ☐ Near Shore Velocity $U_{a1}$: m/s ☐ Far Shore Velocity $U_{a2}$: m/s
- ☐ Near Shore Darcy-Weisbach $f_1$: ☐ Far Shore Darcy-Weisbach $f_2$:
- ☐ Breakpoint: m

☑ Manning's n: 0.032 Wind Speed: 2.0 m/s

## Ambient Density Data

☑ **Uniform** ☑ **Fresh Water:** ☑ Temperature 32.2 °C ☐ Density $\rho_a$: kg/m$^3$ ☐ **Non Fresh:** Density $\rho_a$: kg/m$^3$

☐ **Stratified** ☐ **Type A** ☐ **Type B**: Pycnocline Height m ☐ **Type C**: Pycnocline Height m Jump kg/m$^3$/°C

☐ **Brine and Sediment Only** Density ρ: At Surface $\rho_{as}$: kg/m$^3$/°C At Bottom $\rho_{ab}$: kg/m$^3$/°C

Level 1 Density $\rho_1$: kg/m$^3$/°C Sub 1: m Level 2 Density $\rho_2$: kg/m$^3$/°C Sub 2: m

## Discharge Geometry Data

### CORMIX 1 - Single Port

Nearest Bank: ☑ Left ☐ Right

Distance to Nearest Bank 47.16 m

Verticle angle $\theta_0$: 90 °

Horizontal Angle $\sigma_0$: - °

☐ Port Diameter $D_0$: 0.0508 m

☐ Port Area $A_0$: m$^2$

**Submerged**

Port Height above bottom $h_0$: 0.9144 m

**Above Surface**

Port Height above surface: m

☐ Jet - Like ☐ Spray

☐ Area

Deflector Plate:

☐ Without ☐ With

### CORMIX 2 - Multiport

Nearest Bank: ☑ Left ☐ Right

Orientation:

☐ Unidirectional ☐ Staged

☑ Alternating / Vertical

Number of Openings: 12 Diffuser Length: 65.87 m

Distance to 1st end point $YB_1$: 47.16 m

Distance to 2nd end point $YB_2$: 106.90 m

Port Height $h_0$: 0.9144 m Port Diameter $D_0$: 0.0508 m

Contraction Ratio 0.9

**Angles**

Vertical Angle θ: 90 ° Horizontal Angle σ: - °

Alignment Angle γ: 115 °

Relative Orientation Angle β: 90 °

Nozzel Direction:

☑ Same ☐ Fanned Out

### CORMIX 3 - Surface Discharge

Discharge Located: ☐ Left ☐ Right

Horizontal Angle σ: °

Local Depth at Discharge Outlet: m

☐ **Flush** ☐ **Co-flowing**

☐ **Protruding:**

Distance from Bank m

**Discharge Outlet**

☐ **Channel**

Width m

Depth $b_0$: m

☐ **Pipe** Diameter $D_0$: m

Bottom Invert Depth m

Local Bottom Slope at Channel Entry °

## Mixing Zone Data Inputs

☑ **Non -Toxic effluent**

☑ Water Qualtity Standard: ☐ Chronic 175.7 mg/L ☑ Acute 805.7 mg/L ☐ No Water Quality Standard

☐ **Toxic effluent**

Criterion Continuous Concentration: Criterion Maximum Concentration:

☑ **Maximum Mixing Zone Boundaries**

☐ Trajectory: m ☑ Distance Downstream: 401.37 m ☑ Width: 80.27 m

☑ Area: 195.74 m$^2$

Region of Interest: 5000 m

Number of Output Steps 200

Prepared By:

**CFM Group** Civil and Environmental Engineers, Scientists, Planners, and Surveyors

PGP OPERATING, LLC
A Public Gas Partners Company

April 10, 2019

RECEIVED
APR 12 2019
STORM WATER
MANAGEMENT BRANCH

Mrs. Jasmine White
Alabama Department of Environmental Management
Water Division
1400 Coliseum Boulevard
Montgomery, Alabama 36130-2059

RE: NPDES Permit Reissuance/Transfer
Maxwell Crossing Facility, Tuscaloosa County, Alabama
NPDES Permit No. AL0056791, DSN - 001E

Dear Mrs. White,

PGP Operating, LLC. is submitting this Maxwell Crossing NPDES Permit #AL00556791, reissuance application, for your review and approval. The BMP and SPCC should meet the requirements for the Coalbed Methane Operations Pollution Abatement Plan. The Following documents are required to be a complete NPDES permit application for reissuance:

- ADEM Form 549
- EPA NPDES Form 2C and Modified Form 2C
- Check for $7,875 Associated Permit Reissuance Fee
- Maxwell Crossing Permit Area Map (1" = 2,000') and a reduced copy
- PGP's Best Management Practices Plan (BMP)
- PGP's Spill Prevention Control and Countermeasure Plan (SPCC)

If you have any questions, or need additional information, please contact me at (205) 554-3133.

Sincerely;

PGP Operating, LLC.

Mark A. Rose
EH&S Coordinator.