LANCE R. LEFLEUR
DIRECTOR

ROBERT J. BENTLEY
GOVERNOR

Alabama Department of Environmental Management
adem.alabama.gov

1400 Coliseum Blvd. 36110-2400 ▪ Post Office Box 301463
Montgomery, Alabama 36130-1463
(334) 271-7700 ▪ FAX (334) 271-7950

MAR 16 2016

MR STEVE HIGDON
FACILITY MANAGER
WEYERHAEUSER NR COMPANY
MILLPORT LANDFILL
14715 HIGHWAY 96
MILLPORT ALABAMA 35576

RE: **DRAFT PERMIT**
NPDES PERMIT NUMBER: AL0069221

Dear Mr. Higdon:

Transmitted herein is a draft of the referenced permit.

We would appreciate your comments on the permit within **30 days** of the date of this letter. Please direct any comments of a technical or administrative nature to the undersigned.

By copy of this letter and the draft permit, we are also requesting comments within the same time frame from EPA.

The Alabama Department of Environmental Management encourages you to voluntarily consider pollution prevention practices and alternatives at your facility. Pollution Prevention may assist you in complying with effluent limitations, and possibly reduce or eliminate monitoring requirements.

Should you have any questions, please contact Mr. Theo Pinson by phone at **(334)274-4202** or by e-mail at **tpinson@adem.state.al.us**.

Sincerely,

Scott Ramsey, Chief
Industrial Section
Industrial/Municipal Branch
Water Division

Enclosure: Draft Permit

pc via website: Montgomery Field Office
EPA Region IV
U.S. Fish & Wildlife Service
AL Historical Commission
Advisory Council on Historic Preservation
Department of Conservation and Natural Resources

Birmingham Branch
110 Vulcan Road
Birmingham, AL 35209-4702
(205) 942-6168
(205) 941-1603 (FAX)

Decatur Branch
2715 Sandlin Road, S.W.
Decatur, AL 35603-1333
(256) 353-1713
(256) 340-9359 (FAX)

Mobile Branch
2204 Perimeter Road
Mobile, AL 36615-1131
(251) 450-3400
(251) 479-2593 (FAX)

Mobile-Coastal
3664 Dauphin Street, Suite B
Mobile, AL 36608
(251) 304-1176
(251) 304-1189 (FAX)

ADEM
Alabama Department of Environmental Management

NATIONAL POLLUTANT DISCHARGE ELIMINATION SYSTEM PERMIT

PERMITTEE: WEYERHAEUSER NR COMPANY MILLPORT LANDFILL

FACILITY LOCATION: INTERSECTION OF MT CARMEL ROAD AND ODOM ROAD
MILLPORT, ALABAMA 35576

PERMIT NUMBER: AL0069221

RECEIVING WATERS: DSN001: UNNAMED TRIBUTARY OF RUSHING CREEK

In accordance with and subject to the provisions of the Federal Water Pollution Control Act, as amended, 33 U.S.C. §§1251-1378 (the "FWPCA"), the Alabama Water Pollution Control Act, as amended, Code of Alabama 1975, §§ 22-22-1 to 22-22-14 (the "AWPCA"), the Alabama Environmental Management Act, as amended, Code of Alabama 1975, §§22-22A-1 to 22-22A-15, and rules and regulations adopted thereunder, and subject further to the terms and conditions set forth in this permit, the Permittee is hereby authorized to discharge into the above-named receiving waters.

ISSUANCE DATE:

EFFECTIVE DATE:

EXPIRATION DATE:

Draft

Alabama Department of Environmental Management

INDUSTRIAL SECTION
NATIONAL POLLUTANT DISCHARGE ELIMINATION SYSTEM (NPDES) PERMIT

TABLE OF CONTENTS

PART I DISCHARGE LIMITATIONS, CONDITIONS, AND REQUIREMENTS 1
A. DISCHARGE LIMITATIONS AND MONITORING REQUIREMENTS 1
B. DISCHARGE MONITORING AND RECORD KEEPING REQUIREMENTS 2
1. Representative Sampling 2
2. Test Procedures 2
3. Recording of Results 2
4. Records Retention and Production 2
5. Monitoring Equipment and Instrumentation 3
C. DISCHARGE REPORTING REQUIREMENTS 3
1. Reporting of Monitoring Requirements 3
2. Noncompliance Notification 5
D. OTHER REPORTING AND NOTIFICATION REQUIREMENTS 5
1. Anticipated Noncompliance 5
2. Termination of Discharge 5
3. Updating Information 5
4. Duty to Provide Information 6
5. Cooling Water and Boiler Water Additives 6
6. Permit Issued Based On Estimated Characteristics 6
E. SCHEDULE OF COMPLIANCE 6
PART II OTHER REQUIREMENTS, RESPONSIBILITIES, AND DUTIES 7
A. OPERATIONAL AND MANAGEMENT REQUIREMENTS 7
1. Facilities Operation and Maintenance 7
2. Best Management Practices 7
3. Spill Prevention, Control, and Management 7
B. OTHER RESPONSIBILITIES 7
1. Duty to Mitigate Adverse Impacts 7
2. Right of Entry and Inspection 7
C. BYPASS AND UPSET 7
1 Bypass 7
2. Upset 8
D. DUTY TO COMPLY WITH PERMIT, RULES, AND STATUTES 8
1 Duty to Comply 8
2. Removed Substances 8
3. Loss or Failure of Treatment Facilities 9
4. Compliance with Statutes and Rules 9
E. PERMIT TRANSFER, MODIFICATION, SUSPENSION, REVOCATION, AND REISSUANCE 9
1 Duty to Reapply or Notify of Intent to Cease Discharge 9
2. Change in Discharge 9
3. Transfer of Permit 10
4. Permit Modification and Revocation 10
5. Permit Termination 11
6. Permit Suspension 11
7. Request for Permit Action Does Not Stay Any Permit Requirement 11
F. COMPLIANCE WITH TOXIC POLLUTANT STANDARD OR PROHIBITION 11
G. DISCHARGE OF WASTEWATER GENERATED BY OTHERS 11
PART III OTHER PERMIT CONDITIONS 12
A. CIVIL AND CRIMINAL LIABILITY 12
B. OIL AND HAZARDOUS SUBSTANCE LIABILITY 12
C. PROPERTY AND OTHER RIGHTS 12
D. AVAILABILITY OF REPORTS 13
E. EXPIRATION OF PERMITS FOR NEW OR INCREASED DISCHARGES 13
F. COMPLIANCE WITH WATER QUALITY STANDARDS 13
G. GROUNDWATER 13
H. DEFINITIONS 13
I. SEVERABILITY 16
PART IV ADDITIONAL REQUIREMENTS, CONDITIONS, AND LIMITATIONS 17
A. BEST MANAGEMENT PRACTICES (BMP) PLAN REQUIREMENTS 17
B. STORMWATER FLOW MEASUREMENT AND SAMPLING REQUIREMENTS 18

ATTACHMENT: FORM 421 NON-COMPLIANCE NOTIFICATION FORM

PART I DISCHARGE LIMITATIONS, CONDITIONS, AND REQUIREMENTS

A. DISCHARGE LIMITATIONS AND MONITORING REQUIREMENTS

During the period beginning on the effective date of this permit and lasting through the expiration date of this permit, the permittee is authorized to discharge from the following point source(s) outfall(s), described more fully in the permittee's application:

DSN001Y: Stormwater runoff from lumber and wood product landfill 3/

Such discharge shall be limited and monitored by the permittee as specified below:

	DISCHARGE LIMITATIONS					MONITORING REQUIREMENTS 1/		
EFFLUENT CHARACTERISTIC	Monthly Average	Daily Maximum	Daily Minimum	Monthly Average	Daily Maximum	Measurement Frequency 2/	Sample Type 4/	Seasonal
pH	-	-	REPORT S.U.	-	REPORT S.U.	Annually	Grab	-
Solids, Total Suspended	-	-	-	-	REPORT mg/l	Annually	Grab	-
Oil & Grease	-	-	-	-	15.0 mg/l	Annually	Grab	-
Carbon, Tot Organic (TOC)	-	-	-	-	REPORT mg/l	Annually	Grab	-
Arsenic, Total Recoverable 5/	-	-	-	-	REPORT mg/l	Annually	Grab	-
Chromium Total Recoverable 5/	-	-	-	-	REPORT mg/l	Annually	Grab	-
Copper Total Recoverable 5/	-	-	-	-	REPORT mg/l	Annually	Grab	-
Flow, In Conduit or Thru Treatment Plant	-	REPORT MGD	-	-	-	Annually	Estimate	-
Chemical Oxygen Demand (COD)	-	-	-	-	REPORT mg/l	Annually	Grab	-

THE DISCHARGE SHALL HAVE NO SHEEN, AND THERE SHALL BE NO DISCHARGE OF VISIBLE OIL, FLOATING SOLIDS OR VISIBLE FOAM IN OTHER THAN TRACE AMOUNTS.

1/ Samples collected to comply with the monitoring requirements specified above shall be collected at the following location: At the nearest accessible location just prior to discharge and after final treatment. Unless otherwise specified, composite samples shall be time composite samples collected using automatic sampling equipment or a minimum of eight (8) equal volume grab samples collected over equal time intervals. All composite samples shall be collected for the total period of discharge not to exceed 24 hours.

2/ If only one sampling event occurs during a month, the sample result shall be reported on the discharge monitoring report as both the monthly average and daily maximum value for all parameters with a monthly average limitation.

3/ See Part IV.A for Best Management Practices (BMP) Plan Requirements.

4/ See Part IV.B for Stormwater Measurement and Sampling Requirements.

5/ For the purpose of demonstration of compliance with this parameter, "Total" and "Total Recoverable" shall be considered equivalent.

B. DISCHARGE MONITORING AND RECORD KEEPING REQUIREMENTS

1. Representative Sampling

Samples and measurements taken as required herein shall be representative of the volume and nature of the monitored discharge and shall be in accordance with the provisions of this permit.

2. Test Procedures

For the purpose of reporting and compliance, permittees shall use one of the following procedures:

a. For parameters with an EPA established Minimum Level (ML), report the measured value if the analytical result is at or above the ML and report "0" for values below the ML. Test procedures for the analysis of pollutants shall conform to 40 CFR Part 136 and guidelines published pursuant to Section 304(h) of the FWPCA, 33 U.S.C. Section 1314(h). If more than one method for analysis of a substance is approved for use, a method having a minimum level lower than the permit limit shall be used. If the minimum level of all methods is higher than the permit limit, the method having the lowest minimum level shall be used and a report of less than the minimum level shall be reported as zero and will constitute compliance; however, should EPA approve a method with a lower minimum level during the term of this permit the permittee shall use the newly approved method.

b. For pollutants parameters without an established ML, an interim ML may be utilized. The interim ML shall be calculated as 3.18 times the Method Detection Level (MDL) calculated pursuant to 40 CFR Part 136, Appendix B.

Permittees may develop an effluent matrix-specific ML, where an effluent matrix prevents attainment of the established ML. However, a matrix specific ML shall be based upon proper laboratory method and technique. Matrix-specific MLs must be approved by the Department, and may be developed by the permittee during permit issuance, reissuance, modification, or during compliance schedule.

In either case the measured value should be reported if the analytical result is at or above the ML and "0" reported for values below the ML.

c. For parameters without an EPA established ML, interim ML, or matrix-specific ML, a report of less than the detection limit shall constitute compliance if the detection limit of all analytical methods is higher than the permit limit using the most sensitive EPA approved method. For the purpose of calculating a monthly average, "0" shall be used for values reported less than the detection limit.

The Minimum Level utilized for procedures A and B above shall be reported on the permittee's DMR. When an EPA approved test procedure for analysis of a pollutant does not exist, the Director shall approve the procedure to be used.

3. Recording of Results

For each measurement or sample taken pursuant to the requirements of this permit, the permittee shall record the following information:

a. The facility name and location, point source number, date, time and exact place of sampling;

b. The name(s) of person(s) who obtained the samples or measurements;

c. The dates and times the analyses were performed;

d. The name(s) of the person(s) who performed the analyses;

e. The analytical techniques or methods used, including source of method and method number; and

f. The results of all required analyses.

4. Records Retention and Production

The permittee shall retain records of all monitoring information, including all calibration and maintenance records and all original strip chart recordings for continuous monitoring instrumentation, copies of all reports required by the permit, and records of all data used to complete the above reports or the application for this permit, for a period of at least three years from the date of the sample measurement, report or application. This period may be extended by request of the Director at any time. If litigation or other enforcement action, under the AWPCA and/or the FWPCA, is ongoing which involves any of the above records, the records shall be kept until the litigation is resolved. Upon the written request of the Director or his designee, the permittee shall provide the Director with a copy of any record required to be retained by this paragraph. Copies of these records shall not be submitted unless requested.

All records required to be kept for a period of three years shall be kept at the permitted facility or an alternate location approved by the Department in writing and shall be available for inspection.

5. Monitoring Equipment and Instrumentation

All equipment and instrumentation used to determine compliance with the requirements of this permit shall be installed, maintained, and calibrated in accordance with the manufacturer's instructions or, in the absence of manufacturer's instructions, in accordance with accepted practices. The permittee shall develop and maintain quality assurance procedures to ensure proper operation and maintenance of all equipment and instrumentation. The quality assurance procedures shall include the proper use, maintenance, and installation, when appropriate, of monitoring equipment at the plant site.

C. DISCHARGE REPORTING REQUIREMENTS

1. Reporting of Monitoring Requirements

a. The permittee shall conduct the required monitoring in accordance with the following schedule:

MONITORING REQUIRED MORE FREQUENTLY THAN MONTHLY AND MONTHLY shall be conducted during the first full month following the effective date of coverage under this permit and every month thereafter.

QUARTERLY MONITORING shall be conducted at least once during each calendar quarter. Calendar quarters are the periods of January through March, April through June, July through September, and October through December. The permittee shall conduct the quarterly monitoring during the first complete calendar quarter following the effective date of this permit and is then required to monitor once during each quarter thereafter. Quarterly monitoring may be done anytime during the quarter, unless restricted elsewhere in this permit, but it should be submitted with the last DMR due for the quarter, i.e. (March, June, September and December DMRs).

SEMIANNUAL MONITORING shall be conducted at least once during the period of January through June and at least once during the period of July through December. The permittee shall conduct the semiannual monitoring during the first complete calendar semiannual period following the effective date of this permit and is then required to monitor once during each semiannual period thereafter. Semiannual monitoring may be done anytime during the semiannual period, unless restricted elsewhere in this permit, but it should be submitted with the last DMR due for the month of the semiannual period, i.e. (June and December DMRs).

ANNUAL MONITORING shall be conducted at least once during the period of January through December. The permittee shall conduct the annual monitoring during the first complete calendar annual period following the effective date of this permit and is then required to monitor once during each annual period thereafter. Annual monitoring may be done anytime during the year, unless restricted elsewhere in this permit, but it should be submitted with the December DMR.

b. The permittee shall submit discharge monitoring reports (DMRs) on the forms provided by the Department and in accordance with the following schedule:

REPORTS OF MORE FREQUENTLY THAN MONTHLY AND MONTHLY TESTING shall be submitted on a **monthly** basis. The first report is due on the **28th** day of [ ]. The reports shall be submitted so that they are received by the Department no later than the 28th day of the month following the reporting period.

REPORTS OF QUARTERLY TESTING shall be submitted on a quarterly basis. The first report is due on the 28th day of [ ]. The reports shall be submitted so that they are received by the Department no later than the 28th day of the month following the reporting period.

REPORTS OF SEMIANNUAL TESTING shall be submitted on a semiannual basis. The reports are due on the 28th day of JANUARY and the 28th day of JULY. The reports shall be submitted so that they are received by the Department no later than the 28th day of the month following the reporting period.

REPORTS OF ANNUAL TESTING shall be submitted on an annual basis. The first report is due on the 28th day of JANUARY. The reports shall be submitted so that they are received by the Department no later than the 28th day of the month following the reporting period.

c. The Department is utilizing a web-based electronic environmental (E2) DMR reporting system for submittal of DMRs. **If the permittee is not already participating in the E2 DMR system, the permittee must apply for participation in the system within 180 days of coverage under this permit unless the facility submits in writing valid justification as to why they cannot participate and the Department approves in writing utilization of hard copy DMR submittals.** Once the permittee is enrolled in the E2 DMR system, the permittee must utilize the system for the submittal of DMRs unless otherwise allowed by this permit. To participate in the E2 DMR system, the Permittee Participation Package may be downloaded online at **https://e2.adem.alabama.gov/npdes**. If the E2 DMR system is down (i.e., electronic submittal of DMR data is unable to be completed due to technical problems originating with the

Department's system: this could include entry/submittal issues with an entire set of DMRs or individual parameters), the permittee is not relieved of their obligation to submit DMR data to the Department by the required submittal date. However, if the E2 DMR system is down on the 28th day of the month or is down for an extended period of time as determined by the Department when a DMR is required to be submitted, the facility may submit the data in an alternate manner and format acceptable to the Department. Preapproved alternate acceptable methods include faxing, e-mailing, mailing, or hand-delivery of data such that they are received by the required reporting date. Within five calendar days of the E2 DMR system resuming operation, the permittee shall enter the data into the E2 DMR system, unless an alternate timeframe is approved by the Department. An attachment should be included with the E2 DMR submittal verifying the original submittal date (date of the fax, copy of dated e-mail, or hand-delivery stamped date). If a permittee is allowed to submit via the US Postal Service, the DMR must be legible and bear an original signature. Photo and electronic copies of the signature are not acceptable and shall not satisfy the reporting requirements of this permit. If the permittee, using approved analytical methods as specified in Provision I.B.2, monitors any discharge from a point source for a limited substance identified in Provision I.A of this permit more frequently than required by this permit, the results of such monitoring shall be included in the calculation and reporting of values on the DMR form and the increased frequency shall be indicated on the DMR form. In the event no discharge from a point source identified in Provision I.A of this permit and described more fully in the permittee's application occurs during a monitoring period, the permittee shall report "No Discharge" for such period on the appropriate DMR form.

d. All reports and forms required to be submitted by this permit, the AWPCA and the Department's Rules and Regulations, shall be electronically signed (or, if allowed by the Department, traditionally signed) by a "responsible official" of the permittee as defined in ADEM Administrative Code Rule 335-6-6-.09 or a "duly authorized representative" of such official as defined in ADEM Administrative Code Rule 335-6-6-.09 and shall bear the following certification:

"I certify under penalty of law that this document and all attachments were prepared under my direction or supervision in accordance with a system designed to assure that qualified personnel properly gather and evaluate the information submitted. Based on my inquiry of the person or persons who manage the system, or those persons directly responsible for gathering information, the information submitted is, to the best of my knowledge and belief, true, accurate, and complete. I am aware that there are significant penalties for submitting false information, including the possibility of fine and imprisonment for knowing violations."

e. All Discharge Monitoring Report forms required to be submitted by this permit, the AWPCA, and the Department's Rules shall be addressed to:

Alabama Department of Environmental Management
Permits and Services Division
Environmental Data Section
Post Office Box 301463
Montgomery, Alabama 36130-1463

Certified and Registered Mail containing Discharge Monitoring Reports shall be addressed to:

Alabama Department of Environmental Management
Permits and Services Division
Environmental Data Section
1400 Coliseum Boulevard
Montgomery, Alabama 36110-2059

f. All other correspondence and reports required to be submitted by this permit, the AWPCA, and the Department's Rules shall be addressed to:

Alabama Department of Environmental Management
Water Division
Post Office Box 301463
Montgomery, Alabama 36130-1463

Certified and Registered Mail shall be addressed to:

Alabama Department of Environmental Management
Water Division
1400 Coliseum Boulevard
Montgomery, Alabama 36110-2059

g. If this permit is a reissuance, then the permittee shall continue to submit DMRs in accordance with the requirements of their previous permit until such time as DMRs are due as discussed in Part I.C.1.b. above.

2. Noncompliance Notification

a. 24-Hour Noncompliance Reporting

The permittee shall report to the Director, within 24-hours of becoming aware of the noncompliance, any noncompliance which may endanger health or the environment. This shall include but is not limited to the following circumstances:

(1) does not comply with any daily minimum or maximum discharge limitation for an effluent characteristic specified in Provision I. A. of this permit which is denoted by an "(X)";

(2) threatens human health or welfare, fish or aquatic life, or water quality standards;

(3) does not comply with an applicable toxic pollutant effluent standard or prohibition established under Section 307(a) of the FWPCA, 33 U.S.C. Section 1317(a);

(4) contains a quantity of a hazardous substance which has been determined may be harmful to public health or welfare under Section 311(b)(4) of the FWPCA, 33 U.S.C. Section 1321(b)(4);

(5) exceeds any discharge limitation for an effluent characteristic as a result of an unanticipated bypass or upset; and

(6) is an unpermitted direct or indirect discharge of a pollutant to a water of the state (unpermitted discharges properly reported to the Department under any other requirement are not required to be reported under this provision).

The permittee shall orally report the occurrence and circumstances of such discharge to the Director within 24-hours after the permittee becomes aware of the occurrence of such discharge. In addition to the oral report, the permittee shall submit to the Director or Designee a written report as provided in Part I.C.2.c no later than five (5) days after becoming aware of the occurrence of such discharge.

b. If for any reason, the permittee's discharge does not comply with any limitation of this permit, the permittee shall submit to the Director or Designee a written report as provided in Part I.C.2.c below, such report shall be submitted with the next Discharge Monitoring Report required to be submitted by Part I.C.1 of this permit after becoming aware of the occurrence of such noncompliance.

c. Any written report required to be submitted to the Director or Designee by Part I.C.2 a. or b. shall be submitted using a copy of the Noncompliance Notification Form provided with this permit and shall include the following information:

(1) A description of the discharge and cause of noncompliance;

(2) The period of noncompliance, including exact dates and times or, if not corrected, the anticipated time the noncompliance is expected to continue; and

(3) A description of the steps taken and/or being taken to reduce or eliminate the noncomplying discharge and to prevent its recurrence.

D. OTHER REPORTING AND NOTIFICATION REQUIREMENTS

1. Anticipated Noncompliance

The permittee shall give the Director written advance notice of any planned changes or other circumstances regarding a facility which may result in noncompliance with permit requirements.

2. Termination of Discharge

The permittee shall notify the Director, in writing, when all discharges from any point source(s) identified in Provision I. A. of this permit have permanently ceased. This notification shall serve as sufficient cause for instituting procedures for modification or termination of the permit.

3. Updating Information

a. The permittee shall inform the Director of any change in the permittee's mailing address, telephone number or in the permittee's designation of a facility contact or office having the authority and responsibility to prevent and abate violations of the AWPCA, the Department's Rules, and the terms and conditions of this permit, in writing, no later than ten (10) days after such change. Upon request of the Director or his designee, the permittee shall furnish the Director with an update of any information provided in the permit application.

b. If the permittee becomes aware that it failed to submit any relevant facts in a permit application, or submitted incorrect information in a permit application or in any report to the Director, it shall promptly submit such facts or information with a written explanation for the mistake and/or omission.

4. Duty to Provide Information

The permittee shall furnish to the Director, within a reasonable time, any information which the Director or his designee may request to determine whether cause exists for modifying, revoking and re-issuing, suspending, or terminating this permit, in whole or in part, or to determine compliance with this permit.

5. Cooling Water and Boiler Water Additives

a. The permittee shall notify the Director in writing not later than thirty (30) days prior to instituting the use of any biocide corrosion inhibitor or chemical additive in a cooling or boiler system, not identified in the application for this permit, from which discharge is allowed by this permit. Notification is not required for additives that do not contain a heavy metal(s) as an active ingredient and that pass through a wastewater treatment system prior to discharge nor is notification required for additives that should not reasonably be expected to cause the cooling water or boiler water to exhibit toxicity as determined by analysis of manufacturer's data or testing by the permittee. Such notification shall include:

(1) name and general composition of biocide or chemical;

(2) 96-hour median tolerance limit data for organisms representative of the biota of the waterway into which the discharge will ultimately reach;

(2) quantities to be used;

(3) frequencies of use;

(4) proposed discharge concentrations; and

(6) EPA registration number, if applicable.

b. The use of a biocide or additive containing tributyl tin, tributyl tin oxide, zinc, chromium or related compounds in cooling or boiler system(s), from which a discharge regulated by this permit occurs, is prohibited except as exempted below. The use of a biocide or additive containing zinc, chromium or related compounds may be used in special circumstances if (1) the permit contains limits for these substances, or (2) the applicant demonstrates during the application process that the use of zinc, chromium or related compounds as a biocide or additive will not pose a reasonable potential to violate the applicable State water quality standards for these substances. The use of any additive, not identified in this permit or in the application for this permit or not exempted from notification under this permit is prohibited, prior to a determination by the Department that permit modification to control discharge of the additive is not required or prior to issuance of a permit modification controlling discharge of the additive.

6. Permit Issued Based On Estimated Characteristics

a. If this permit was issued based on estimates of the characteristics of a process discharge reported on an EPA NPDES Application Form 2D (EPA Form 3510-2D), the permittee shall complete and submit an EPA NPDES Application Form 2C (EPA Form 3510-2C) no later than two years after the date that discharge begins. Sampling required for completion of the Form 2C shall occur when a discharge(s) from the process(s) causing the new or increased discharge is occurring. If this permit was issued based on estimates concerning the composition of a stormwater discharge(s), the permittee shall perform the sampling required by EPA NPDES Application Form 2F (EPA Form 3510-2F) no later than one year after the industrial activity generating the stormwater discharge has been fully initiated.

b. This permit shall be reopened if required to address any new information resulting from the completion and submittal of the Form 2C and or 2F.

E. SCHEDULE OF COMPLIANCE

1. The permittee shall achieve compliance with the discharge limitations specified in Provision I. A. in accordance with the following schedule:

COMPLIANCE SHALL BE ATTAINED ON THE EFFECTIVE DATE OF THIS PERMIT

2. No later than 14 calendar days following a date identified in the above schedule of compliance, the permittee shall submit either a report of progress or, in the case of specific actions being required by identified dates, a written notice of compliance or noncompliance. In the latter case, the notice shall include the cause of noncompliance, any remedial actions taken, and the probability of meeting the next scheduled requirement.

PART II OTHER REQUIREMENTS, RESPONSIBILITIES, AND DUTIES

A. OPERATIONAL AND MANAGEMENT REQUIREMENTS

1. Facilities Operation and Maintenance

The permittee shall at all times properly operate and maintain all facilities and systems of treatment and control (and related appurtenances) which are installed or used by the permittee to achieve compliance with the conditions of the permit. Proper operation and maintenance includes effective performance, adequate funding, adequate operator staffing and training, and adequate laboratory and process controls, including appropriate quality assurance procedures. This provision requires the operation of backup or auxiliary facilities only when necessary to achieve compliance with the conditions of the permit.

2. Best Management Practices

a. Dilution water shall not be added to achieve compliance with discharge limitations except when the Director or his designee has granted prior written authorization for dilution to meet water quality requirements.

b. The permittee shall prepare, implement, and maintain a Spill Prevention, Control and Countermeasures (SPCC) Plan in accordance with 40 C.F.R. Section 112 if required thereby.

c. The permittee shall prepare, submit for approval and implement a Best Management Practices (BMP) Plan for containment of any or all process liquids or solids, in a manner such that these materials do not present a significant potential for discharge, if so required by the Director or his designee. When submitted and approved, the BMP Plan shall become a part of this permit and all requirements of the BMP Plan shall become requirements of this permit.

3. Spill Prevention, Control, and Management

The permittee shall provide spill prevention, control, and/or management sufficient to prevent any spills of pollutants from entering a water of the state or a publicly or privately owned treatment works. Any containment system used to implement this requirement shall be constructed of materials compatible with the substance(s) contained and which shall prevent the contamination of groundwater and such containment system shall be capable of retaining a volume equal to 110 percent of the capacity of the largest tank for which containment is provided.

B. OTHER RESPONSIBILITIES

1. Duty to Mitigate Adverse Impacts

The permittee shall promptly take all reasonable steps to mitigate and minimize or prevent any adverse impact on human health or the environment resulting from noncompliance with any discharge limitation specified in Provision I. A. of this permit, including such accelerated or additional monitoring of the discharge and/or the receiving waterbody as necessary to determine the nature and impact of the noncomplying discharge.

2. Right of Entry and Inspection

The permittee shall allow the Director, or an authorized representative, upon the presentation of proper credentials and other documents as may be required by law to:

a. enter upon the permittee's premises where a regulated facility or activity or point source is located or conducted, or where records must be kept under the conditions of the permit;

b. have access to and copy, at reasonable times, any records that must be kept under the conditions of the permit;

c. inspect any facilities, equipment (including monitoring and control equipment), practices, or operations regulated or required under the permit; and

d. sample or monitor, for the purposes of assuring permit compliance or as otherwise authorized by the AWPCA, any substances or parameters at any location.

C. BYPASS AND UPSET

1. Bypass

a. Any bypass is prohibited except as provided in b. and c. below:

b. A bypass is not prohibited if:

(1) It does not cause any discharge limitation specified in Provision I. A. of this permit to be exceeded;

(2) It enters the same receiving stream as the permitted outfall; and

(3) It is necessary for essential maintenance of a treatment or control facility or system to assure efficient operation of such facility or system.

c. A bypass is not prohibited and need not meet the discharge limitations specified in Provision I. A. of this permit if:

(1) It is unavoidable to prevent loss of life, personal injury, or severe property damage;

(2) There are no feasible alternatives to the bypass, such as the use of auxiliary treatment facilities, retention of untreated wastes, or maintenance during normal periods of equipment downtime (this condition is not satisfied if adequate back-up equipment should have been installed in the exercise of reasonable engineering judgment to prevent a bypass which occurred during normal periods of equipment downtime or preventive maintenance); and

(3) The permittee submits a written request for authorization to bypass to the Director at least ten (10) days prior to the anticipated bypass (if possible), the permittee is granted such authorization, and the permittee complies with any conditions imposed by the Director to minimize any adverse impact on human health or the environment resulting from the bypass.

d. The permittee has the burden of establishing that each of the conditions of Provision II.C.1.b. or c. have been met to qualify for an exception to the general prohibition against bypassing contained in a. and an exemption, where applicable, from the discharge limitations specified in Provision I. A. of this permit.

2. Upset

a. A discharge which results from an upset need not meet the discharge limitations specified in Provision I. A. of this permit if:

(1) No later than 24-hours after becoming aware of the occurrence of the upset, the permittee orally reports the occurrence and circumstances of the upset to the Director or his designee; and

(2) No later than five (5) days after becoming aware of the occurrence of the upset, the permittee furnishes the Director with evidence, including properly signed, contemporaneous operating logs, or other relevant evidence, demonstrating that (i) an upset occurred; (ii) the permittee can identify the specific cause(s) of the upset; (iii) the permittee's facility was being properly operated at the time of the upset; and (iv) the permittee promptly took all reasonable steps to minimize any adverse impact on human health or the environment resulting from the upset.

b. The permittee has the burden of establishing that each of the conditions of Provision II. C.2.a. of this permit have been met to qualify for an exemption from the discharge limitations specified in Provision I.A. of this permit.

D. DUTY TO COMPLY WITH PERMIT, RULES, AND STATUTES

1. Duty to Comply

a. The permittee must comply with all conditions of this permit. Any permit noncompliance constitutes a violation of the AWPCA and the FWPCA and is grounds for enforcement action, for permit termination, revocation and reissuance, suspension, modification; or denial of a permit renewal application.

b. The necessity to halt or reduce production or other activities in order to maintain compliance with the conditions of the permit shall not be a defense for a permittee in an enforcement action.

c. The discharge of a pollutant from a source not specifically identified in the permit application for this permit and not specifically included in the description of an outfall in this permit is not authorized and shall constitute noncompliance with this permit.

d. The permittee shall take all reasonable steps, including cessation of production or other activities, to minimize or prevent any violation of this permit or to minimize or prevent any adverse impact of any permit violation.

e. Nothing in this permit shall be construed to preclude and negate the permittee's responsibility or liability to apply for, obtain, or comply with other ADEM, Federal, State, or Local Government permits, certifications, licenses, or other approvals.

2. Removed Substances

Solids, sludges, filter backwash, or any other pollutant or other waste removed in the course of treatment or control of wastewaters shall be disposed of in a manner that complies with all applicable Department Rules.

3. Loss or Failure of Treatment Facilities

Upon the loss or failure of any treatment facilities, including but not limited to the loss or failure of the primary source of power of the treatment facility, the permittee shall, where necessary to maintain compliance with the discharge limitations specified in Provision I. A. of this permit, or any other terms or conditions of this permit, cease, reduce, or otherwise control production and/or all discharges until treatment is restored. If control of discharge during loss or failure of the primary source of power is to be accomplished by means of alternate power sources, standby generators, or retention of inadequately treated effluent, the permittee must furnish to the Director within six months a certification that such control mechanisms have been installed.

4. Compliance with Statutes and Rules

a. This permit has been issued under ADEM Administrative Code, Chapter 335-6-6. All provisions of this chapter, that are applicable to this permit, are hereby made a part of this permit. A copy of this chapter may be obtained for a small charge from the Office of General Counsel, Alabama Department of Environmental Management, 1400 Coliseum Blvd., Montgomery, AL 36130.

b. This permit does not authorize the noncompliance with or violation of any Laws of the State of Alabama or the United States of America or any regulations or rules implementing such laws. FWPCA, 33 U.S.C. Section 1319, and Code of Alabama 1975, Section 22-22-14.

E. PERMIT TRANSFER, MODIFICATION, SUSPENSION, REVOCATION, AND REISSUANCE

1. Duty to Reapply or Notify of Intent to Cease Discharge

a. If the permittee intends to continue to discharge beyond the expiration date of this permit, the permittee shall file a complete permit application for reissuance of this permit at least 180 days prior to its expiration. If the permittee does not intend to continue discharge beyond the expiration of this permit, the permittee shall submit written notification of this intent which shall be signed by an individual meeting the signatory requirements for a permit application as set forth in ADEM Administrative Code Rule 335-6-6-.09.

b. Failure of the permittee to apply for reissuance at least 180 days prior to permit expiration will void the automatic continuation of the expiring permit provided by ADEM Administrative Code Rule 335-6-6-.06 and should the permit not be reissued for any reason any discharge after expiration of this permit will be an unpermitted discharge.

2. Change in Discharge

a. The permittee shall apply for a permit modification at least 180 days in advance of any facility expansion, production increase, process change, or other action that could result in the discharge of additional pollutants or increase the quantity of a discharged pollutant such that existing permit limitations would be exceeded or that could result in an additional discharge point. This requirement applies to pollutants that are or that are not subject to discharge limitations in this permit. No new or increased discharge may begin until the Director has authorized it by issuance of a permit modification or a reissued permit.

b. The permittee shall notify the Director as soon as it is known or there is reason to believe:

(1) That any activity has occurred or will occur which would result in the discharge on a routine or frequent basis, of any toxic pollutant which is not limited in this permit, if that discharge will exceed the highest of the following notification levels:

(a) one hundred micrograms per liter;

(b) two hundred micrograms per liter for acrolein and acrylonitrile; five hundred micrograms per liter for 2,4-dinitrophenol and for 2-methyl-4,6-dini-trophenol; and one milligram per liter for antimony;

(c) five times the maximum concentration value reported for that pollutant in the permit application; or

(2) That any activity has occurred or will occur which would result in any discharge, on a non-routine or infrequent basis, of a toxic pollutant which is not limited in the permit, if that discharge will exceed the highest of the following notification levels:

(a) five hundred micrograms per liter;

(b) one milligram per liter for antimony;

(c) ten times the maximum concentration value reported for that pollutant in the permit application.

3. Transfer of Permit

This permit may not be transferred or the name of the permittee changed without notice to the Director and subsequent modification or revocation and reissuance of the permit to identify the new permittee and to incorporate any other changes as may be required under the FWPCA or AWPCA. In the case of a change in name, ownership or control of the permittee's premises only, a request for permit modification in a format acceptable to the Director is required at least 30 days prior to the change. In the case of a change in name, ownership or control of the permittee's premises accompanied by a change or proposed change in effluent characteristics, a complete permit application is required to be submitted to the Director at least 180 days prior to the change. Whenever the Director is notified of a change in name, ownership or control, he may decide not to modify the existing permit and require the submission of a new permit application.

4. Permit Modification and Revocation

a. This permit may be modified or revoked and reissued, in whole or in part, during its term for cause, including but not limited to, the following:

(1) If cause for termination under Provision II. E. 5. of this permit exists, the Director may choose to revoke and reissue this permit instead of terminating the permit;

(2) If a request to transfer this permit has been received, the Director may decide to revoke and reissue or to modify the permit; or

(3) If modification or revocation and reissuance is requested by the permittee and cause exists, the Director may grant the request.

b. This permit may be modified during its term for cause, including but not limited to, the following:

(1) If cause for termination under Provision II. E. 5. of this permit exists, the Director may choose to modify this permit instead of terminating this permit;

(2) There are material and substantial alterations or additions to the facility or activity generating wastewater which occurred after permit issuance which justify the application of permit conditions that are different or absent in the existing permit;

(3) The Director has received new information that was not available at the time of permit issuance and that would have justified the application of different permit conditions at the time of issuance;

(4) A new or revised requirement(s) of any applicable standard or limitation is promulgated under Sections 301(b)(2)(C), (D), (E), and (F), and 307(a)(2) of the FWPCA;

(5) Errors in calculation of discharge limitations or typographical or clerical errors were made;

(6) To the extent allowed by ADEM Administrative Code, Rule 335-6-6-.17, when the standards or regulations on which the permit was based have been changed by promulgation of amended standards or regulations or by judicial decision after the permit was issued;

(7) To the extent allowed by ADEM Administrative Code, Rule 335-6-6-.17, permits may be modified to change compliance schedules;

(8) To agree with a granted variance under 301(c), 301(g), 301(h), 301(k), or 316(a) of the FWPCA or for fundamentally different factors;

(9) To incorporate an applicable 307(a) FWPCA toxic effluent standard or prohibition;

(10) When required by the reopener conditions in this permit;

(11) When required under 40 CFR 403.8(e) (compliance schedule for development of pretreatment program);

(12) Upon failure of the state to notify, as required by Section 402(b)(3) of the FWPCA, another state whose waters may be affected by a discharge permitted by this permit;

(13) When required to correct technical mistakes, such as errors in calculation, or mistaken interpretations of law made in determining permit conditions; or

(14) When requested by the permittee and the Director determines that the modification has cause and will not result in a violation of federal or state law, regulations or rules.

5. Permit Termination

This permit may be terminated during its term for cause, including but not limited to, the following:

a. Violation of any term or condition of this permit;

b. The permittee's misrepresentation or failure to disclose fully all relevant facts in the permit application or during the permit issuance process or the permittee's misrepresentation of any relevant facts at any time;

c. Materially false or inaccurate statements or information in the permit application or the permit;

d. A change in any condition that requires either a temporary or permanent reduction or elimination of the permitted discharge;

e. The permittee's discharge threatens human life or welfare or the maintenance of water quality standards;

f. Permanent closure of the facility generating the wastewater permitted to be discharged by this permit or permanent cessation of wastewater discharge;

g. New or revised requirements of any applicable standard or limitation that is promulgated under Sections 301(b)(2)(C), (D), (E), and (F), and 307(a)(2) of the FWPCA that the Director determines cannot be complied with by the permittee; or

h. Any other cause allowed by the ADEM Administrative Code, Chapter 335-6-6.

6. Permit Suspension

This permit may be suspended during its term for noncompliance until the permittee has taken action(s) necessary to achieve compliance.

7. Request for Permit Action Does Not Stay Any Permit Requirement

The filing of a request by the permittee for modification, suspension or revocation of this permit, in whole or in part, does not stay any permit term or condition.

F. COMPLIANCE WITH TOXIC POLLUTANT STANDARD OR PROHIBITION

If any applicable effluent standard or prohibition (including any schedule of compliance specified in such effluent standard or prohibition) is established under Section 307(a) of the FWPCA, 33 U.S.C. Section 1317(a), for a toxic pollutant discharged by the permittee and such standard or prohibition is more stringent than any discharge limitation on the pollutant specified in Provision I. A. of this permit, or controls a pollutant not limited in Provision I. A. of this permit, this permit shall be modified to conform to the toxic pollutant effluent standard or prohibition and the permittee shall be notified of such modification. If this permit has not been modified to conform to the toxic pollutant effluent standard or prohibition before the effective date of such standard or prohibition, the permittee shall attain compliance with the requirements of the standard or prohibition within the time period required by the standard or prohibition and shall continue to comply with the standard or prohibition until this permit is modified or reissued.

G. DISCHARGE OF WASTEWATER GENERATED BY OTHERS

The discharge of wastewater, generated by any process, facility, or by any other means not under the operational control of the permittee or not identified in the application for this permit or not identified specifically in the description of an outfall in this permit is not authorized by this permit.

PART III OTHER PERMIT CONDITIONS

A. CIVIL AND CRIMINAL LIABILITY

1. Tampering

Any person who falsifies, tampers with, or knowingly renders inaccurate any monitoring device or method required to be maintained or performed under the permit shall, upon conviction, be subject to penalties as provided by the AWPCA.

2. False Statements

Any person who knowingly makes any false statement, representation, or certification in any record or other document submitted or required to be maintained under this permit, including monitoring reports or reports of compliance or noncompliance shall, upon conviction, be subject to penalties as provided by the AWPCA.

3. Permit Enforcement

a. Any NPDES permit issued or reissued by the Department is a permit for the purpose of the AWPCA and the FWPCA and as such any terms, conditions, or limitations of the permit are enforceable under state and federal law.

b. Any person required to have a NPDES permit pursuant to ADEM Administrative Code Chapter 335-6-6 and who discharges pollutants without said permit, who violates the conditions of said permit, who discharges pollutants in a manner not authorized by the permit, or who violates applicable orders of the Department or any applicable rule or standard of the Department, is subject to any one or combination of the following enforcement actions under applicable state statutes.

(1) An administrative order requiring abatement, compliance, mitigation, cessation, clean-up, and/or penalties;

(2) An action for damages;

(3) An action for injunctive relief; or

(4) An action for penalties.

c. If the permittee is not in compliance with the conditions of an expiring or expired permit the Director may choose to do any or all of the following provided the permittee has made a timely and complete application for reissuance of the permit:

(1) initiate enforcement action based upon the permit which has been continued;

(2) issue a notice of intent to deny the permit reissuance. If the permit is denied, the owner or operator would then be required to cease the activities authorized by the continued permit or be subject to enforcement action for operating without a permit;

(3) reissue the new permit with appropriate conditions; or

(4) take other actions authorized by these rules and AWPCA.

4. Relief from Liability

Except as provided in Provision II.C.1 (Bypass) and Provision II.C.2 (Upset), nothing in this permit shall be construed to relieve the permittee of civil or criminal liability under the AWPCA or FWPCA for noncompliance with any term or condition of this permit.

B. OIL AND HAZARDOUS SUBSTANCE LIABILITY

Nothing in this permit shall be construed to preclude the institution of any legal action or relieve the permittee from any responsibilities, liabilities or penalties to which the permittee is or may be subject under Section 311 of the FWPCA, 33 U.S.C. Section 1321.

C. PROPERTY AND OTHER RIGHTS

This permit does not convey any property rights in either real or personal property, or any exclusive privileges, nor does it authorize any injury to persons or property or invasion of other private rights, trespass, or any infringement of federal, state, or local laws or regulations, nor does it authorize or approve the construction of any physical structures or facilities or the undertaking of any work in any waters of the state or of the United States.

D. AVAILABILITY OF REPORTS

Except for data determined to be confidential under Code of Alabama 1975, Section 22-22-9(c), all reports prepared in accordance with the terms of this permit shall be available for public inspection at the offices of the Department. Effluent data shall not be considered confidential.

E. EXPIRATION OF PERMITS FOR NEW OR INCREASED DISCHARGES

1. If this permit was issued for a new discharger or new source, this permit shall expire eighteen months after the issuance date if construction of the facility has not begun during the eighteen-month period.

2. If this permit was issued or modified to allow the discharge of increased quantities of pollutants to accommodate the modification of an existing facility and if construction of this modification has not begun during the eighteen month period after issuance of this permit or permit modification, this permit shall be modified to reduce the quantities of pollutants allowed to be discharged to those levels that would have been allowed if the modification of the facility had not been planned.

3. Construction has begun when the owner or operator has:

   a. begun, or caused to begin as part of a continuous on-site construction program:

      (1) any placement, assembly, or installation of facilities or equipment; or

      (2) significant site preparation work including clearing, excavation, or removal of existing buildings, structures, or facilities which is necessary for the placement, assembly, or installation of new source facilities or equipment; or

   b. entered into a binding contractual obligation for the purpose of placement, assembly, or installation of facilities or equipment which are intended to be used in its operation within a reasonable time. Options to purchase or contracts which can be terminated or modified without substantial loss, and contracts for feasibility, engineering, and design studies do not constitute a contractual obligation under the paragraph. The entering into a lease with the State of Alabama for exploration and production of hydrocarbons shall also be considered beginning construction.

F. COMPLIANCE WITH WATER QUALITY STANDARDS

1. On the basis of the permittee's application, plans, or other available information, the Department has determined that compliance with the terms and conditions of this permit should assure compliance with the applicable water quality standards.

2. Compliance with permit terms and conditions notwithstanding, if the permittee's discharge(s) from point sources identified in Provision I. A. of this permit cause or contribute to a condition in contravention of state water quality standards, the Department may require abatement action to be taken by the permittee in emergency situations or modify the permit pursuant to the Department's Rules, or both.

3. If the Department determines, on the basis of a notice provided pursuant to this permit or any investigation, inspection or sampling, that a modification of this permit is necessary to assure maintenance of water quality standards or compliance with other provisions of the AWPCA or FWPCA, the Department may require such modification and, in cases of emergency, the Director may prohibit the discharge until the permit has been modified.

G. GROUNDWATER

Unless specifically authorized under this permit, this permit does not authorize the discharge of pollutants to groundwater. Should a threat of groundwater contamination occur, the Director may require groundwater monitoring to properly assess the degree of the problem and the Director may require that the Permittee undertake measures to abate any such discharge and/or contamination.

H. DEFINITIONS

1. Average monthly discharge limitation - means the highest allowable average of "daily discharges" over a calendar month, calculated as the sum of all "daily discharges" measured during a calendar month divided by the number of "daily discharges" measured during that month (zero discharge days shall not be included in the number of "daily discharges" measured and a less than detectable test result shall be treated as a concentration of zero if the most sensitive EPA approved method was used).

2. Average weekly discharge limitation - means the highest allowable average of "daily discharges" over a calendar week, calculated as the sum of all "daily discharges" measured during a calendar week divided by the number of "daily discharges" measured during that week (zero discharge days shall not be included in the number of "daily discharges" measured and a less than detectable test result shall be treated as a concentration of zero if the most sensitive EPA approved method was used).

3. Arithmetic Mean – means the summation of the individual values of any set of values divided by the number of individual values.

4. AWPCA - means the Alabama Water Pollution Control Act.

5. BOD – means the five-day measure of the pollutant parameter biochemical oxygen demand.

6. Bypass - means the intentional diversion of waste streams from any portion of a treatment facility.

7. CBOD – means the five-day measure of the pollutant parameter carbonaceous biochemical oxygen demand.

8. Daily discharge - means the discharge of a pollutant measured during any consecutive 24-hour period in accordance with the sample type and analytical methodology specified by the discharge permit.

9. Daily maximum - means the highest value of any individual sample result obtained during a day.

10. Daily minimum - means the lowest value of any individual sample result obtained during a day.

11. Day - means any consecutive 24-hour period.

12. Department - means the Alabama Department of Environmental Management.

13. Director - means the Director of the Department.

14. Discharge - means "[t]he addition, introduction, leaking, spilling or emitting of any sewage, industrial waste, pollutant or other wastes into waters of the state". Code of Alabama 1975, Section 22-22-1(b)(8).

15. Discharge Monitoring Report (DMR) - means the form approved by the Director to accomplish reporting requirements of an NPDES permit.

16. DO – means dissolved oxygen.

17. 8HC – means 8-hour composite sample, including any of the following:

    a. The mixing of at least 5 equal volume samples collected at constant time intervals of not more than 2 hours over a period of not less than 8 hours between the hours of 6:00 a.m. and 6:00 p.m. If the sampling period exceeds 8 hours, sampling may be conducted beyond the 6:00 a.m. to 6:00 p.m. period.

    b. A sample continuously collected at a constant rate over period of not less than 8 hours between the hours of 6:00 a.m. and 6:00 p.m. If the sampling period exceeds 8 hours, sampling may be conducted beyond the 6:00 a.m. to 6:00 p.m. period.

18. EPA - means the United States Environmental Protection Agency.

19. FC – means the pollutant parameter fecal coliform.

20. Flow – means the total volume of discharge in a 24-hour period.

21. FWPCA - means the Federal Water Pollution Control Act.

22. Geometric Mean – means the Nth root of the product of the individual values of any set of values where N is equal to the number of individual values. The geometric mean is equivalent to the antilog of the arithmetic mean of the logarithms of the individual values. For purposes of calculating the geometric mean, values of zero (0) shall be considered one (1).

23. Grab Sample – means a single influent or effluent portion which is not a composite sample. The sample(s) shall be collected at the period(s) most representative of the discharge.

24. Indirect Discharger – means a nondomestic discharger who discharges pollutants to a publicly owned treatment works or a privately owned treatment facility operated by another person.

25. Industrial User – means those industries identified in the Standard Industrial Classification manual, Bureau of the Budget 1967, as amended and supplemented, under the category "Division D – Manufacturing" and such other classes of significant waste producers as, by regulation, the Director deems appropriate.

26. MGD – means million gallons per day.

27. Monthly Average – means, other than for fecal coliform bacteria, the arithmetic mean of the entire composite or grab samples taken for the daily discharges collected in one month period. The monthly average for fecal coliform bacteria is the geometric mean of daily discharge samples collected in a one month period. The monthly average for flow is the arithmetic mean of all flow measurements taken in a one month period.

28. New Discharger – means a person, owning or operating any building, structure, facility or installation:

    a. from which there is or may be a discharge of pollutants;

    b. that did not commence the discharge of pollutants prior to August 13, 1979, and which is not a new source; and

    c. which has never received a final effective NPDES permit for dischargers at that site.

29. NH3-N – means the pollutant parameter ammonia, measured as nitrogen.

30. Permit application - means forms and additional information that is required by ADEM Administrative Code Rule 335-6-6-.08 and applicable permit fees.

31. Point source - means "any discernible, confined and discrete conveyance, including but not limited to any pipe, channel, ditch, tunnel, conduit, well, discrete fissure, container, rolling stock, concentrated animal feeding operation, or vessel or other floating craft, . . . from which pollutants are or may be discharged." Section 502(14) of the FWPCA, 33 U.S.C. Section 1362(14).

32. Pollutant - includes for purposes of this permit, but is not limited to, those pollutants specified in Code of Alabama 1975, Section 22-22-1(b)(3) and those effluent characteristics specified in Provision I. A. of this permit.

33. Privately Owned Treatment Works – means any devices or system which is used to treat wastes from any facility whose operator is not the operator of the treatment works, and which is not a "POTW".

34. Publicly Owned Treatment Works – means a wastewater collection and treatment facility owned by the State, municipality, regional entity composed of two or more municipalities, or another entity created by the State or local authority for the purpose of collecting and treating municipal wastewater.

35. Receiving Stream – means the "waters" receiving a "discharge" from a "point source".

36. Severe property damage - means substantial physical damage to property, damage to the treatment facilities which causes them to become inoperable, or substantial and permanent loss of natural resources which can reasonably be expected to occur in the absence of a bypass. Severe property damage does not mean economic loss caused by delays in production.

37. Significant Source – means a source which discharges 0.025 MGD or more to a POTW or greater than five percent of the treatment work's capacity, or a source which is a primary industry as defined by the U.S. EPA or which discharges a priority or toxic pollutant.

38. Solvent – means any virgin, used or spent organic solvent(s) identified in the F-Listed wastes (F001 through F005) specified in 40 CFR 261.31 that is used for the purpose of solubilizing other materials.

39. TKN – means the pollutant parameter Total Kjeldahl Nitrogen.

40. TON – means the pollutant parameter Total Organic Nitrogen.

41. TRC – means Total Residual Chlorine.

42. TSS – means the pollutant parameter Total Suspended Solids.

43. 24HC – means 24-hour composite sample, including any of the following:

    a. the mixing of at least 12 equal volume samples collected at constant time intervals of not more than 2 hours over a period of 24 hours;

    b. a sample collected over a consecutive 24-hour period using an automatic sampler composite to one sample. As a minimum, samples shall be collected hourly and each shall be no more than one twenty-fourth (1/24) of the total sample volume collected; or

    c. a sample collected over a consecutive 24-hour period using an automatic composite sampler composited proportional to flow.

44. Upset - means an exceptional incident in which there is an unintentional and temporary noncompliance with technology-based permit discharge limitations because of factors beyond the reasonable control of the permittee. An upset does not include noncompliance to the extent caused by operational error, improperly designed treatment facilities, inadequate treatment facilities, lack of preventive maintenance, or careless or improper operation.

45. Waters - means "[a]ll waters of any river, stream, watercourse, pond, lake, coastal, ground or surface water, wholly or partially within the state, natural or artificial. This does not include waters which are entirely confined and retained completely upon the property of a single individual, partnership or corporation unless such waters are used in interstate commerce." Code of Alabama 1975, Section 22-22-1(b)(2). Waters "include all navigable waters" as defined in Section 502(7) of the FWPCA, 22 U.S.C. Section 1362(7), which are within the State of Alabama.

46. Week - means the period beginning at twelve midnight Saturday and ending at twelve midnight the following Saturday.

47. Weekly (7-day and calendar week) Average – is the arithmetic mean of all samples collected during a consecutive 7-day period or calendar week, whichever is applicable. The calendar week is defined as beginning on Sunday and ending on Saturday. Weekly averages shall be calculated for all calendar weeks with Saturdays in the month. If a calendar week overlaps two months (i.e., the Sunday is in one month and the Saturday in the following month), the weekly average calculated for the calendar week shall be included in the data for the month that contains the Saturday.

I. SEVERABILITY

The provisions of this permit are severable, and if any provision of this permit or the application of any provision of this permit to any circumstance is held invalid, the application of such provision to other circumstances, and the remainder of this permit, shall not be affected thereby.

PART IV ADDITIONAL REQUIREMENTS, CONDITIONS, AND LIMITATIONS

A. BEST MANAGEMENT PRACTICES (BMP) PLAN REQUIREMENTS

1. BMP Plan

The permittee shall develop and implement a Best Management Practices (BMP) Plan which prevents, or minimizes the potential for, the release of pollutants from ancillary activities, including material storage areas; plant site runoff; in-plant transfer, process and material handling areas; loading and unloading operations, and sludge and waste disposal areas, to the waters of the State through plant site runoff; spillage or leaks; sludge or waste disposal; or drainage from raw material storage.

2. Plan Content

The permittee shall prepare and implement a best management practices (BMP) plan, which shall:

a. Establish specific objectives for the control of pollutants:

(1) Each facility component or system shall be examined for its potential for causing a release of significant amounts of pollutants to waters of the State due to equipment failure, improper operation, natural phenomena such as rain or snowfall, etc.

(2) Where experience indicates a reasonable potential for equipment failure (e.g., a tank overflow or leakage), natural condition (e.g. precipitation), or circumstances to result in significant amounts of pollutants reaching surface waters, the plan should include a prediction of the direction, rate of flow, and total quantity of pollutants which could be discharged from the facility as a result of each condition or circumstance.

b. Establish specific best management practices to meet the objectives identified under paragraph a. of this section, addressing each component or system capable of causing a release of significant amounts of pollutants to the waters of the State, and identifying specific preventative or remedial measures to be implemented;

c. Establish a program to identify and repair leaking equipment items and damaged containment structures, which may contribute to contaminated stormwater runoff. This program must include regular visual inspections of equipment, containment structures and of the facility in general to ensure that the BMP is continually implemented and effective;

d. Prevent the spillage or loss of fluids, oil, grease, gasoline, etc. from vehicle and equipment maintenance activities and thereby prevent the contamination of stormwater from these substances;

e. Prevent or minimize stormwater contact with material stored on site;

f. Designate by position or name the person or persons responsible for the day to day implementation of the BMP;

g. Provide for routine inspections, on days during which the facility is manned, of any structures that function to prevent stormwater pollution or to remove pollutants from stormwater and of the facility in general to ensure that the BMP is continually implemented and effective;

h. Provide for the use and disposal of any material used to absorb spilled fluids that could contaminate stormwater;

i. Develop a solvent management plan, if solvents are used on site. The solvent management plan shall include as a minimum lists of the solvents on site; the disposal method of solvents used instead of dumping, such as reclamation, contract hauling; and the procedures for assuring that solvents do not routinely spill or leak into the stormwater;

j. Provide for the disposal of all used oils, hydraulic fluids, solvent degreasing material, etc. in accordance with good management practices and any applicable state or federal regulations;

k. Include a diagram of the facility showing the locations where stormwater exits the facility, the locations of any structure or other mechanisms intended to prevent pollution of stormwater or to remove pollutants from stormwater, the locations of any collection and handling systems;

l. Provide control sufficient to prevent or control pollution of stormwater by soil particles to the degree required to maintain compliance with the water quality standard for turbidity applicable to the waterbody(s) receiving discharge(s) under this permit;

m. Provide spill prevention, control, and/or management sufficient to prevent or minimize contaminated stormwater runoff. Any containment system used to implement this requirement shall be constructed of materials compatible with the substance(s) contained and shall prevent the contamination of groundwater. The containment system shall also be capable of retaining a volume equal to 110 percent of the capacity of the largest tank for which containment is provided;

n. Provide and maintain curbing, diking or other means of isolating process areas to the extent necessary to allow segregation and collection for treatment of contaminated stormwater from process areas;

o. Be reviewed by plant engineering staff and the plant manager; and

p. Bear the signature of the plant manager.

3. Compliance Schedule

The permittee shall have reviewed (and revised if necessary) and fully implemented the BMP plan as soon as practicable but no later than six months after the effective date of this permit.

4. Department Review

a. When requested by the Director or his designee, the permittee shall make the BMP available for Department review.

b. The Director or his designee may notify the permittee at any time that the BMP is deficient and require correction of the deficiency.

c. The permittee shall correct any BMP deficiency identified by the Director or his designee within 30 days of receipt of notification and shall certify to the Department that the correction has been made and implemented.

5. Administrative Procedures

a. A copy of the BMP shall be maintained at the facility and shall be available for inspection by representatives of the Department.

b. A log of the routine inspection required above shall be maintained at the facility and shall be available for inspection by representatives of the Department. The log shall contain records of all inspections performed for the last three years and each entry shall be signed by the person performing the inspection.

c. The permittee shall provide training for any personnel required to implement the BMP and shall retain documentation of such training at the facility. This documentation shall be available for inspection by representatives of the Department. Training shall be performed prior to the date that implementation of the BMP is required.

d. BMP Plan Modification. The permittee shall amend the BMP plan whenever there is a change in the facility or change in operation of the facility which materially increases the potential for the ancillary activities to result in a discharge of significant amounts of pollutants.

e. BMP Plan Review. The permittee shall complete a review and evaluation of the BMP plan at least once every three years from the date of preparation of the BMP plan. Documentation of the BMP Plan review and evaluation shall be signed and dated by the Plant Manager.

B. STORMWATER FLOW MEASUREMENT AND SAMPLING REQUIREMENTS

1. Stormwater Flow Measurement

a. All stormwater samples shall be collected from the discharge resulting from a storm event that is greater than 0.1 inches.

b. The total volume of stormwater discharged for the event must be monitored, including the date and duration (in hours) and rainfall (in inches) for storm event(s) sampled. The duration between the storm event sampled and the end of the previous measurable (greater than 0.1 inch rainfall) storm event must be a minimum of 72 hours. This information must be recorded as part of the sampling procedure and records retained according to Part I.B. of this permit.

c. The volume may be measured using flow measuring devices, or estimated based on a modification of the Rational Method using total depth of rainfall, the size of the drainage area serving a stormwater outfall, and an estimate of the runoff coefficient of the drainage area. This information must be recorded as part of the sampling procedure and records retained according to Part I.B. of this permit.

2. Stormwater Sampling

a. A grab sample, if required by this permit, shall be taken during the first thirty minutes of the discharge (or as soon thereafter as practicable); and a flow-weighted composite sample, if required by this permit, shall be taken for the entire event or for the first three hours of the event.

b. All test procedures will be in accordance with part I.B. of this permit.

ALABAMA DEPARTMENT OF ENVIRONMENTAL MANAGEMENT
WATER DIVISION – INDUSTRIAL AND MUNICIPAL SECTIONS
NONCOMPLIANCE NOTIFICATION FORM

PERMITTEE NAME: _____ PERMIT NO: _____

FACILITY LOCATION: _____

DMR REPORTING PERIOD: _____

1. DESCRIPTION OF DISCHARGE: (Include outfall number (s))

2. DESCRIPTION OF NON-COMPLIANCE: (Attach additional pages if necessary):

LIST EFFLUENT VIOLATIONS (If applicable)			
Outfall Number (s)	NONCOMPLIANCE PARAMETER(S)	Result Reported (Include units)	Permit Limit (Include units)

LIST MONITORING / REPORTING VIOLATIONS (If applicable)		
Outfall Number (s)	NONCOMPLIANCE PARAMETER(S)	Monitoring / Reporting Violation (Provide description)

3. CAUSE OF NON-COMPLIANCE (Attach additional pages if necessary):

4. PERIOD OF NONCOMPLIANCE: (Include exact date(s) and time(s) or, if not corrected, the anticipated time the noncompliance is expected to continue):

5. DESCRIPTION OF STEPS TAKEN AND/OR BEING TAKEN TO REDUCE OR ELIMINATE THE NONCOMPLYING DISCHARGE AND TO PREVENT ITS RECURRENCE (attach additional pages if necessary):

"I certify under penalty of law that this document and all attachments were prepared under my direction or supervision in accordance with a system designed to assure that qualified personnel properly gather and evaluate the information submitted. Based on my inquiry of the person or persons who manage the system, or those persons directly responsible for gathering the information, the information submitted is, to the best of my knowledge and belief, true, accurate, and complete. I am aware that there are significant penalties for submitting false information, including the possibility of fine and imprisonment for knowing violations."

_____
NAME AND TITLE OF RESPONSIBLE OFFICIAL (type or print)

_____/_____
SIGNATURE OF RESPONSIBLE OFFICIAL / DATE SIGNED

ADEM Form 421 09/05

ADEM PERMIT RATIONALE

PREPARED DATE: March 1, 2016
PREPARED BY: Theo Pinson

Permittee Name: Weyerhaeuser NR Company

Facility Name: Weyerhaeuser NR Company, Millport Landfill

Permit Number: AL0069221

PERMIT IS A REISSUANCE DUE TO EXPIRATION

DISCHARGE SERIAL NUMBERS & DESCRIPTIONS:

DSN001: Stormwater runoff from lumber and wood product landfill

INDUSTRIAL CATEGORY: Non-Categorical

MAJOR: No

STREAM INFORMATION:

Receiving Stream:	Unnamed Tributary of Rushing Creek
Classification:	Fish & Wildlife
River Basin:	Tombigbee
7Q10:	0 cfs
303(d) List:	No
TMDL:	No

DISCUSSION:

The Weyerhaeuser NR Company, Millport Landfill accepts waste from the nearby Weyerhaeuser NR Company, Millport Lumber Mill. The waste consists of bark, wood chips, short logs, butt trimmings, scrap lumber, ash, metal bands, and other materials associated with the Weyerhaeuser NR Company, Millport Lumber Mill. The landfill only accepts wastes from the Weyerhaeuser NR Company, Millport Lumber Mill. The wastes are spread by bulldozer and an earthen cover is applied. Areas of the landfill not in use are capped and vegetated.

It was determined that the discharge is not regulated under the 40 CFR Part 445 - Landfills Point Source Category. 40 CFR Part 445.1(e) states, "This part does not apply to discharges of landfill wastewater from landfills operated in conjunction with other industrial or commercial operations when the landfill only receives wastes generated by the industrial or commercial operation directly associated with the landfill." The Weyerhaeuser NR Company, Millport Landfill only accepts wastes from the Weyerhaeuser NR Company, Millport Lumber Mill.

ADEM Administrative Rule 335-6-10-.12 requires applicants to new or expanded discharges to Tier II waters demonstrate that the proposed discharge is necessary for important economic or social development in the area in which the waters are located. The application submitted by the facility is not for a new or expanded discharge; therefore, anti-degradation requirements do not apply.

EPA has not promulgated specific guidelines for the discharges covered under the proposed permit. Proposed permit limits are based on Best Professional Judgment. The proposed frequencies are based on a review of site specific conditions and an evaluation of similar facilities.

001Y:

Parameter	Monthly Avg Loading	Daily Max Loading	Daily Min Concentration	Monthly Avg Concentration	Daily Max Concentration	Sample Frequency	Sample Type	Basis*
pH	-	-	REPORT S.U.	-	REPORT S.U.	Annually	Grab	BPJ
Solids, Total Suspended	-	-	-	-	REPORT mg/l	Annually	Grab	BPJ
Oil & Grease	-	-	-	-	15.0 mg/l	Annually	Grab	BPJ
Carbon, Tot Organic (TOC)	-	-	-	-	REPORT mg/l	Annually	Grab	BPJ
Arsenic, Total Recoverable	-	-	-	-	REPORT mg/l	Annually	Grab	BPJ
Chromium Total Recoverable	-	-	-	-	REPORT mg/l	Annually	Grab	BPJ
Copper Total Recoverable	-	-	-	-	REPORT mg/l	Annually	Grab	BPJ
Flow, In Conduit or Thru Treatment Plant	-	REPORT MGD	-	-	-	Annually	Estimate	BPJ
Chemical Oxygen Demand (COD)	-	-	-	-	REPORT mg/l	Annually	Grab	BPJ

*Basis for Permit Limitation

- BPJ – Best Professional Judgment

Discussion

Best Professional Judgment (BPJ)

The parameters of concern for this facility are based on the parameters of concern listed in EPA Form 2F and from the current permit. These parameters are consistent with similar facilities in the state and have been proven to be reflective of the operations at this facility.

Best Management Practices (BMPs) are believed to be the most effective way to control the contamination of stormwater from areas of industrial activities. This facility is required to maintain a BMP plan. The requirements of the BMP plan call for minimization of stormwater contact with waste materials, products and by-products, and for prevention of spills or loss of fluids from equipment maintenance activities. The effectiveness of the BMPs will be measured through the monitoring of the pollutants of concern.

Oil & Grease

The daily maximum limit for Oil and Grease should prevent the occurrence of a visible sheen in the stream and has been shown to be achievable through the use of proper BMPs.

COD, pH, Total Suspended Solids, and TOC

Monitoring is proposed to measure the effectiveness of the BMP plan.

Copper, Chromium, and Arsenic

Monitoring is proposed given that some of the waste products received for disposal in the landfill may have been treated with the wood preservative CCA.

NATIONAL POLLUTANT DISCHARGE ELIMINATION SYSTEM (NPDES)
PERMIT APPLICATION SUPPLEMENTARY INFORMATION

ALABAMA DEPARTMENT OF ENVIRONMENTAL MANAGEMENT
WATER DIVISION – INDUSTRIAL / MINING PERMIT SECTION
POST OFFICE BOX 301463
MONTGOMERY, ALABAMA 36130-1463

INSTRUCTIONS: APPLICATIONS SHOULD BE TYPED OR PRINTED IN INK AND SUBMITTED TO THE DEPARTMENT IN DUPLICATE. IF INSUFFICIENT SPACE IS AVAILABLE TO ADDRESS ANY ITEM, PLEASE CONTINUE ON AN ATTACHED SHEET OF PAPER. PLEASE MARK N/A IN THE APPROPRIATE BOX WHEN AN ITEM IS NON-APPLICABLE TO THE APPLICANT.

PURPOSE OF THIS APPLICATION

- [ ] INITIAL PERMIT APPLICATION FOR NEW FACILITY
- [ ] INITIAL PERMIT APPLICATION FOR EXISTING FACILITY
- [ ] MODIFICATION OF EXISTING PERMIT
- [x] REISSUANCE OF EXISTING PERMIT
- [ ] REVOCATION & REISSUANCE OF EXISTING PERMIT

1. Facility Name: Weyerhaeuser NR Company, Millport Landfill

   a. Operator Name: Weyerhaeuser NR Company

   b. Is the operator identified in 1.a., the owner of the facility? Yes [✓] No [ ]
   If no, provide the name and address of the operator and submit information indicating the operator's scope of responsibility for the facility.

2. NPDES Permit Number AL 0 0 6 9 2 2 1

3. SID Permit Number (if applicable): IU ___ ___ - ___ ___ - ___ ___ ___ ___ ___

4. NPDES General Permit Number (if applicable) ALG ___ ___ ___ ___ ___ ___ ___

5. Facility Physical Location: (Attach a map with location marked; street, route no. or other specific identifier)

   Street: Near the intersection of Mt. Carmel Road and Odom Road

   City: Millport County: Lamar State: Alabama Zip: 35576

   Facility (Front Gate) Latitude: 33 deg. 31 min. 49.13 sec. Longitude: 88 deg. 01 min. 34.48 sec.

6. Facility Mailing Address (Street or Post Office Box): 14715 Highway 96

   City: Millport State: Alabama Zip: 35576

RECEIVED
JAN 11 2016
IND. MUN BRANCH

7. Responsible Official (as described on page 13 of this application):

Name and Title: Steve Higdon, Facility Manager

Address: 14715 Highway 96

City: Millport State: Alabama Zip: 35576

Phone Number: (205) 596-3311

EMAIL Address: Steve.Higdon@weyerhaeuser.com

8. Designated Facility Contact:

Name and Title: Christopher Hopf, Environmental Manager

Phone Number: (205) 596-1197

EMAIL Address: Christopher.Hopf@weyerhaeuser.com

9. Designated Discharge Monitoring Report Contact:

Name and Title: Christopher Hopf, Environmental Manager

Phone Number: (205) 596-1197

EMAIL Address: Christopher.Hopf@weyerhaeuser.com

10. Type of Business Entity:

☑ Corporation ☐ General Partnership ☐ Limited Partnership

☐ Sole Proprietorship ☐ Other (Please Specify) _____

11. Complete this section if the Applicant's business entity is a Corporation

a) Location of Incorporation:

Address: 33663 Weyerhaeuser Way South

City: Federal Way County: King State: WA Zip: 98003

b) Parent Corporation of Applicant:

Name: NA

Address: _____

City: _____ State: _____ Zip: _____

c) Subsidiary Corporation(s) of Applicant:

Name: NA

Address:

City: State: Zip:

d) Corporate Officers:

Name: Jerry Nix, Gulf South Regional Manager

Address: 2056 Jesse Hall Road

City: Magnolia State: Mississippi Zip: 39652

Name: Adrian Blocker, Lumber Vice President

Address: 33663 Weyerhaeuser Way South

City: Federal Way State: Washington Zip: 98003

e) Agent designated by the corporation for purposes of service:

Name: NA

Address:

City: State: Zip:

12. If the Applicant's business entity is a Partnership, please list the general partners.

Name: NA

Address:

City: State: Zip:

Name:

Address:

City: State: Zip:

13. If the Applicant's business entity is a Proprietorship, please enter the proprietor's information.

Name: NA

Address: _____

City: _____ State: _____ Zip: _____

14. Permit numbers for Applicant's previously issued NPDES Permits and identification of any other State of Alabama Environmental Permits presently held by the Applicant, its parent corporation, or subsidiary corporations within the State of Alabama:

Permit Name	Permit Number	Held By
See Appendix		

15. Identify all Administrative Complaints, Notices of Violation, Directives, Administrative Orders, or Litigation concerning water pollution, if any, against the Applicant, its parent corporation or subsidiary corporations within the State of Alabama within the past five years (attach additional sheets if necessary):

Facility Name	Permit Number	Type of Action	Date of Action
NA			

SECTION B – BUSINESS ACTIVITY

1. Indicate applicable Standard Industrial Classification (SIC) Codes for all processes (If more than one applies, list in order of importance:

a. 4953

b. _____

c. _____

d. _____

e. _____

2. If your facility conducts or will be conducting any of the processes listed below (regardless of whether they generate wastewater, waste sludge, or hazardous waste), place a check beside the category of business activity (check all that apply):

Industrial Categories

[ ]	Aluminum Forming	[ ]	Metal Molding and Casting
[ ]	Asbestos Manufacturing	[ ]	Metal Products
[ ]	Battery Manufacturing	[ ]	Nonferrous Metals Forming
[ ]	Can Making	[ ]	Nonferrous Metals Manufacturing
[ ]	Canned and Preserved Fruit and Vegetables	[ ]	Oil and Gas Extraction
[ ]	Canned and Preserved Seafood	[ ]	Organic Chemicals Manufacturing
[ ]	Cement Manufacturing	[ ]	Paint and Ink Formulating
[ ]	Centralized Waste Treatment	[ ]	Paving and Roofing Manufacturing
[ ]	Carbon Black	[ ]	Pesticides Manufacturing
[ ]	Coal Mining	[ ]	Petroleum Refining
[ ]	Coil Coating	[ ]	Phosphate Manufacturing
[ ]	Copper Forming	[ ]	Photographic
[ ]	Electric and Electronic Components Manufacturing	[ ]	Pharmaceutical
[ ]	Electroplating	[ ]	Plastic & Synthetic Materials
[ ]	Explosives Manufacturing	[ ]	Plastics Processing Manufacturing
[ ]	Feedlots	[ ]	Porcelain Enamel
[ ]	Ferroalloy Manufacturing	[ ]	Pulp, Paper, and Fiberboard Manufacturing
[ ]	Fertilizer Manufacturing	[ ]	Rubber
[ ]	Foundries (Metal Molding and Casting)	[ ]	Soap and Detergent Manufacturing
[ ]	Glass Manufacturing	[ ]	Steam and Electric
[ ]	Grain Mills	[ ]	Sugar Processing
[ ]	Gum and Wood Chemicals Manufacturing	[ ]	Textile Mills
[ ]	Inorganic Chemicals	[✓]	Timber Products
[ ]	Iron and Steel	[ ]	Transportation Equipment Cleaning
[ ]	Leather Tanning and Finishing	[ ]	Waste Combustion
[ ]	Metal Finishing	[ ]	Other (specify)_____
[ ]	Meat Products		

A facility with processes inclusive in these business areas may be covered by Environmental Protection (EPA) categorical standards. These facilities are termed "categorical users" and should skip to question 2 of Section C.

3. Give a brief description of all operations at this facility including primary products or services (attach additional sheets if necessary):

The landfill is used solely by the Millport Mill to dispose of wood wastes made up of bark, wood chips, short logs, butt trimmings, ash and metal bands. There is no process wastewater produced at this site.

SECTION C – WASTEWATER DISCHARGE INFORMATION

Facilities that checked activities in question 2 of Section B and are considered Categorical Industrial Users should skip to question 2 of this section.

1. **For Non-Categorical Users Only**: Provide wastewater flows for each of the processes or proposed processes. Using the process flow schematic (Figure 1, pg 14), enter the description that corresponds to each process. [New facilities should provide estimates for each discharge.]

Process Description	Last 12 Months (gals/day) Highest Month Avg. Flow	Highest Flow Year of Last 5 (gals/day) Monthly Avg. Flow	Discharge Type (batch, continuous, intermittent)
NA			

If batch discharge occurs or will occur, indicate: [New facilities may estimate.]

a. Number of batch discharges: NA per day

b. Average discharge per batch: _____ (GPD)

c. Time of batch discharges _____ at _____
(days of week) (hours of day)

d. Flow rate: _____ gallons/minute

e. Percent of total discharge: _____

Non-Process Discharges (e.g. non-contact cooling water)	Last 12 Months (gals/day) Highest Month Avg. Flow	Highest Flow Year of Last 5 (gals/day) Monthly Avg. Flow

2. **Complete this Section only if you are subject to Categorical Standards and plan to directly discharge the associated wastewater to a water of the State.** If Categorical wastewater is discharged exclusively via an indirect discharge to a public or privately-owned treatment works, check "Yes" in the appropriate space below and proceed directly to part 2.c .

[ ] Yes

For Categorical Users: Provide the wastewater discharge flows or production (whichever is applicable by the effluent guidelines) for each of your processes or proposed processes. Using the process flow schematic (Figure 1, pg 14), enter the description that corresponds to each process. [New facilities should provide estimates for each discharge.]

2a.

Regulated Process	Applicable Category	Applicable Subpart	Type of Discharge Flow (batch, continuous, intermittent)
NA			

2b.

Process Description	Last 12 Months (gals/day) Highest Month Average*	Highest Flow Year of Last 5 (gals/day) Monthly Average*	Discharge Type (batch, continuous, intermittent)
NA			

*** Reported values should be expressed in units of the applicable Federal production-based standard. For example, flow (MGD), production (pounds per day), etc.**

If batch discharge occurs or will occur, indicate: [New facilities may estimate.]

a. Number of batch discharges: NA per day

b. Average discharge per batch: _____ (GPD)

c. Time of batch discharges _____ at _____
(days of week) (hours of day)

d. Flow rate: _____ gallons/minute

Percent of total discharge: _____

2c.

Non categorical Process Description	Last 12 Months (gals/day) Highest Month Avg. Flow	Highest Flow Year of Last 5 (gals/day) Monthly Avg. Flow	Discharge Type (batch, continuous, intermittent)
NA			

If batch discharge occurs or will occur, indicate: [New facilities may estimate.]

a. Number of batch discharges: _____ per day

b. Average discharge per batch: _____ (GPD)

c. Time of batch discharges _____ at _____
(days of week) (hours of day)

d. Flow rate: _____ gallons/minute

Percent of total discharge: _____

2d.

Non-Process Discharges (e.g. non-contact cooling water)	Last 12 Months (gals/day) Highest Month Avg. Flow	Highest Flow Year of Last 5 (gals/day) Monthly Avg. Flow
Storm Water	44,500 (2014)	829,750 (2012)

All Applicants must complete Questions 3 – 5.

3. Do you have, or plan to have, automatic sampling equipment or continuous wastewater flow metering equipment at this facility?

Flow Metering	Yes ___	No ✓	N/A ___
Sampling Equipment	Yes ___	No ✓	N/A ___

If so, please indicate the present or future location of this equipment on the sewer schematic and describe the equipment below:

4. Are any process changes or expansions planned during the next three years that could alter wastewater volumes or characteristics? Yes ___ No ✓ (If no, skip Question 5)

Briefly describe these changes and their anticipated effects on the wastewater volume and characteristics:

5. List the trade name and chemical composition of all biocides and corrosion inhibitors used:

Trade Name	Chemical Composition
NA	

For each biocide and/or corrosion inhibitor used, please include the following information:

(1) 96-hour median tolerance limit data for organisms representative of the biota of the waterway into which the discharge will ultimately reach,
(2) quantities to be used,
(3) frequencies of use,
(4) proposed discharge concentrations, and
(5) EPA registration number, if applicable

SECTION D – WATER SUPPLY

Water Sources (check as many as are applicable):

[ ] Private Well
[ ] Municipal Water Utility (Specify City):
[ ] Surface Water
[ ] Other (Specify): NA

IF MORE THAN ONE WELL OR SURFACE INTAKE, PROVIDE DATA FOR EACH ON AN ATTACHMENT

City: NA *MGD Well: NA *MGD Well Depth:____ Ft. Latitude:_____ Longitude:_____

Surface Intake Volume: NA *MGD Intake Elevation in Relation to Bottom _____Ft.

Intake Elevation: _____ Ft. Latitude: _____ Longitude: _____

Name of Surface Water Source: NA

*** MGD – Million Gallons per Day**

Cooling Water Intake Structure Information

Complete questions 1 and 2 if your water supply is provided by an outside source and not by an onsite water intake structure? (e.g., another industry, municipality, etc...)

1. Does the provider of your source water operate a surface water intake? Yes [ ] No [ ]
   (If yes, continue, if no, go to Section E.)

   a) Name of Provider NA b)Location of Provider _____

   c) Latitude: _____ Longitude: _____

2. Is the provider a public water system (defined as a system which provides water to the public for human consumption or which provides only treated water, not raw water)? Yes [ ] No [ ]
   (If yes, go to Section E, if no, continue.)

Only to be completed if you have a cooling water intake structure or the provider of your water supply uses an intake structure and does not treat the raw water.

3. Is any water withdrawn from the source water used for cooling? Yes [ ] No [ ]

4. Using the average monthly measurements over any 12-month period, approximately what percentage of water withdrawn is used exclusively for cooling purposes? _____%

5. Does the cooling water consist of treated effluent that would otherwise be discharged? Yes [ ] No [ ]
   (If yes, go to Section E, if no, complete questions 6 – 17.)

6. Is the cooling water used in a once-through or closed cycle cooling system? Yes [ ] No [ ]

7. When was the intake installed?
   (Please provide dates for all major construction/installation of intake components including screens)

8. What is the maximum intake volume?
   (maximum pumping capacity in gallons per day)

9. What is the average intake volume?
   (average intake pump rate in gallons per day average in any 30-day period)

10. How is the intake operated? (e.g., continuously, intermittently, batch)

11. What is the mesh size of the screen on your intake?

12. What is the intake screen flow-through area?

13. What is the through screen design intake flow velocity? _____ft/sec

14. What is the mechanism for cleaning the screen? (e.g., does it rotate for cleaning)

15. Do you have any additional fish detraction technology on your intake? Yes [ ] No [ ]

16. Have there been any studies to determine the impact of the intake on aquatic organisms? Yes [ ] No [ ] (If yes please provide.)

17. Attach a site map showing the location of the water intake in relation to the facility, shoreline, water depth, etc.

SECTION E – WASTE STORAGE AND DISPOSAL INFORMATION

Provide a description of the location of all sites involved in the storage of solids or liquids that could be accidentally discharged to a water of the state, either directly or indirectly via such avenues as storm water drainage, municipal wastewater systems, etc., which are located at the facility for which the NPDES application is being made. Where possible, the location should be noted on a map and included with this application:

Description of Waste	Description of Storage Location
NA	

Provide a description of the location of the ultimate disposal sites of solid or liquid waste by-products (such as sludges) from any wastewater treatment system located at the facility.

Description of Waste	Quantity (lbs/day)	Disposal Method*
Wood waste from lumber mill	50 cubic yards*	Wastes is placed in the landfill and covered
	*2015 amount	with an earthen cover.

***Indicate which wastes identified above are disposed of at an off-site treatment facility and which are disposed of on-site. If any wastes are sent to an off-site centralized waste treatment facility, identify the waste and the facility.**

SECTION F – COASTAL ZONE INFORMATION

Is the discharge(s) located within 10-foot elevation of Mobile or Baldwin County?

Yes [ ] No [✓] If yes, then complete items A through M below:

	YES	NO
A. Does the project require new construction?		
B. Will the project be a source of new air emissions?		
C. Does the project involve dredging and/or filling?		
Has the Corps of Engineers (COE) permit been received?		
Corps Project Number _____		
D. Does the project involve wetlands and/or submersed grassbeds?		
E. Are oyster reefs located near the project site? (Include a map showing project and discharge location with respect to oyster reefs)		
F. Does the project involve the siting, construction and operation of an energy facility as defined in ADEM Admin. Code R. 335-8-1-.02(bb)?		
G. Does the project involve shoreline erosion mitigation?		
H. Does the project involve construction on beaches and dunes?		
I. Will the project interfere with public access to coastal waters?		
J. Does the project lie within the 100-year floodplain?		
K. Does the project involve the registration, sale, use, or application of pesticides?		
L. Does the project propose to construct a new well or alter an existing well to pump more than 50 GPD?		
M. Has the applicable permit been obtained?		

SECTION G – ANTI-DEGRADATION EVALUATION

In accordance with 40 CFR 131.12 and the Alabama Department of Environmental Management Administrative Code, Section 335-6-10-.04 for antidegradation, the following information must be provided, if applicable. It is the applicant's responsibility to demonstrate the social and economic importance of the proposed activity. If further information is required to make this demonstration, attach additional sheets to the application.

1. Is this a new or increased discharge that began after April 3, 1991? Yes [ ] No [✓]
   If yes, complete question 2 below. If no, go to Section H.

2. Has an Anti-Degradation Analysis been previously conducted and submitted to the Department for the new or increased discharge referenced in question 1? Yes [ ] No [ ]

   If yes, do not complete this section.

If no, and the discharge is to a Tier II waterbody as defined in ADEM Admin. Code r. 335-6-10-.12(4), complete questions A through F below and ADEM forms 311 and 313 (attached). Form 313 must be provided for each alternative considered technically viable.

Information required for new or increased discharges to high quality waters:

A. What environmental or public health problem will the discharger be correcting?

B. How much will the discharger be increasing employment (at its existing facility or as the result of locating a new facility)?

C. How much reduction in employment will the discharger be avoiding?

D. How much additional state or local taxes will the discharger be paying?

E. What public service to the community will the discharger be providing?

F. What economic or social benefit will the discharger be providing to the community?

SECTION H – EPA Application Forms

All Applicants must submit EPA permit application forms. More than one application form may be required from a facility depending on the number and types of discharges or outfalls found there. The EPA application forms are found on the Department's website at http://www.adem.state.al.us/. The EPA application forms must be submitted in duplicate as follows:

1. All applicants must submit Form 1.
2. Applicants for existing industrial facilities (including manufacturing facilities, commercial facilities, mining activities, and silvicultural activities) which discharge process wastewater must submit Form 2C.
3. Applicants for new industrial facilities which propose to discharge process wastewater must submit Form 2D.
4. Applicants for new and existing industrial facilities which discharge only non-process wastewater (i.e., non-contact cooling water and/or sanitary wastewater) must submit Form 2E.
5. Applicants for new and existing facilities whose discharge is composed entirely of storm water associated with industrial activity must submit Form 2F, unless exempted by § 122.26(c)(1)(ii). If the discharge is composed of storm water and non-storm water, the applicant must also submit Forms 2C, 2D, and/or 2E, as appropriate (in addition to Form 2F).

SECTION I – ENGINEERING REPORT/BMP PLAN REQUIREMENTS
See ADEM 335-6-6-.08(i) & (j)

SECTION J– RECEIVING WATERS

Receiving Water(s)	303(d) Segment? (Y / N)	Included in TMDL?* (Y / N)
Unnamed tributary to Rushing Creek	N	N

*If a TMDL Compliance Schedule is requested, the following should be attached as supporting documentation:
(1) Justification for the requested Compliance Schedule (e.g. time for design and installation of control equipment, etc.);
(2) Monitoring results for the pollutant(s) of concern which have not previously been submitted to the Department (sample collection dates, analytical results (mass and concentration), methods utilized, MDL/ML, etc. should be submitted as available);
(3) Requested interim limitations, if applicable;
(4) Date of final compliance with the TMDL limitations; and,
(5) Any other additional information available to support requested compliance schedule.

SECTION K – APPLICATION CERTIFICATION

THE INFORMATION CONTAINED IN THIS FORM MUST BE CERTIFIED BY A RESPONSIBLE OFFICIAL AS DEFINED IN ADEM ADMINISTRATIVE RULE 335-6-6-.09 "SIGNATORIES TO PERMIT APPLICATIONS AND REPORTS" (SEE BELOW).

"I CERTIFY UNDER PENALTY OF LAW THAT THIS DOCUMENT AND ALL ATTACHMENTS WERE PREPARED UNDER MY DIRECTION OR SUPERVISION IN ACCORDANCE WITH A SYSTEM DESIGNED TO ASSURE THAT QUALIFIED PERSONNEL PROPERLY GATHER AND EVALUATE THE INFORMATION SUBMITTED. BASED ON MY INQUIRY OF THE PERSON OR PERSONS WHO MANAGE THE SYSTEM, OR THOSE PERSONS DIRECTLY RESPONSIBLE FOR GATHERING THE INFORMATION, THE INFORMATION SUBMITTED IS, TO THE BEST OF MY KNOWLEDGE AND BELIEF, TRUE, ACCURATE, AND COMPLETE. I AM AWARE THAT THERE ARE SIGNIFICANT PENALTIES FOR SUBMITTING FALSE INFORMATION INCLUDING THE POSSIBILITY OF FINE AND IMPRISONMENT FOR KNOWING VIOLATIONS."

"I FURTHER CERTIFY UNDER PENALTY OF LAW THAT ALL ANALYSES REPORTED AS LESS THAN DETECTABLE IN THIS APPLICATION OR ATTACHMENTS THERETO WERE PERFORMED USING THE EPA APPROVED TEST METHOD HAVING THE LOWEST DETECTION LIMIT FOR THE SUBSTANCE TESTED."

SIGNATURE OF RESPONSIBLE OFFICIAL. _____ DATE SIGNED: 12-23-15

(TYPE OR PRINT) NAME OF RESPONSIBLE OFFICIAL. Steve Higdon

TITLE OF RESPONSIBLE OFFICIAL: Facility Manager

MAILING ADDRESS: 14715 Highway 96

CITY, STATE, ZIP: Millport, Alabama 35576 PHONE: (205) 596-3311

335-6-6-.09 SIGNATORIES TO PERMIT APPLICATIONS AND REPORTS.

(1) The application for an NPDES permit shall be signed by a responsible official, as indicated below:
(a) In the case of a corporation, by a principal executive officer of at least the level of vice president, or a manager assigned or delegated in accordance with corporate procedures, with such delegation submitted in writing if required by the Department, who is responsible for manufacturing, production, or operating facilities and is authorized to make management decisions which govern the operation of the regulated facility;
(b) In the case of a partnership, by a general partner;
(c) In the case of a sole proprietorship, by the proprietor; or
(d) In the case of a municipal, state, federal, or other public entity, by either a principal executive officer, or ranking elected official.

FIGURE 1

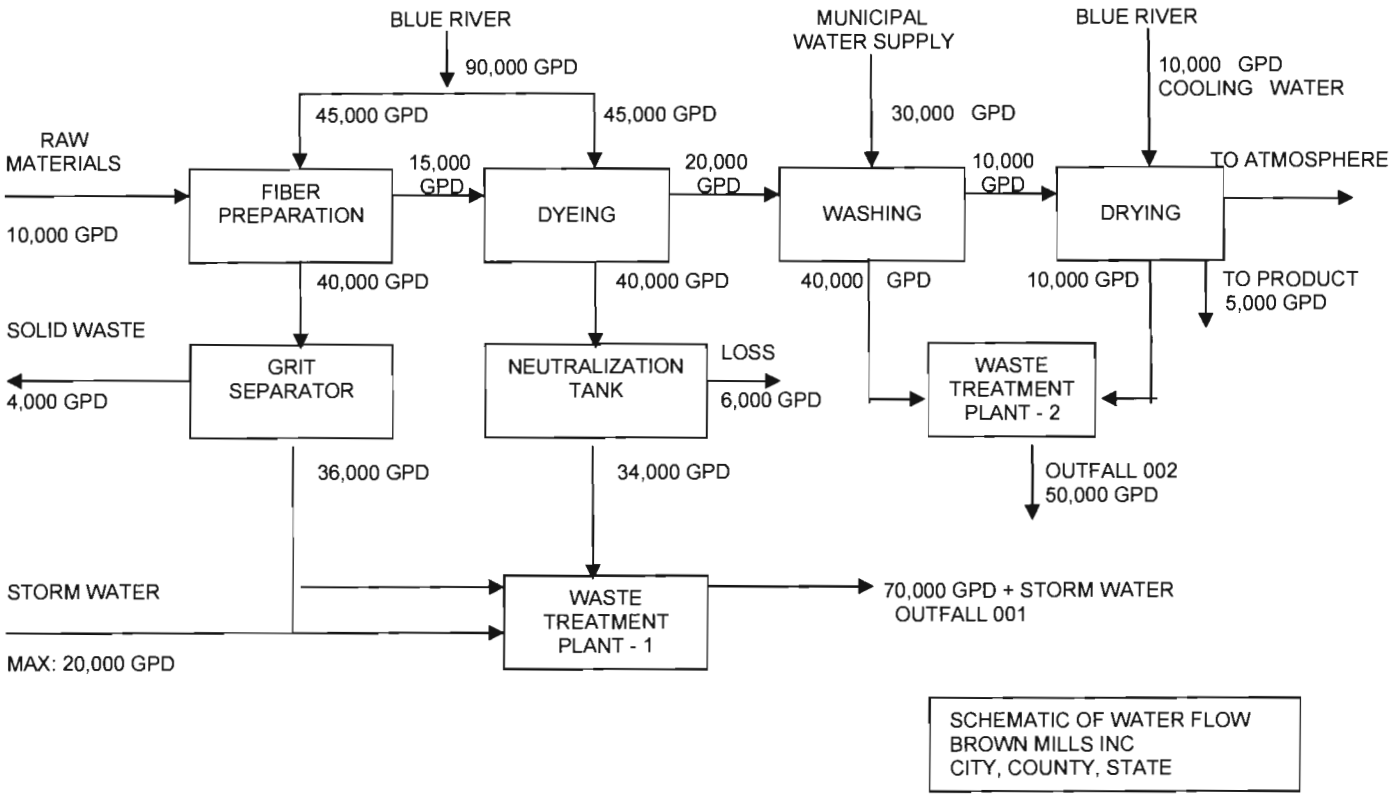
BLUE RIVER
90,000 GPD
45,000 GPD
45,000 GPD
MUNICIPAL WATER SUPPLY
30,000 GPD
BLUE RIVER
10,000 GPD COOLING WATER
RAW MATERIALS
10,000 GPD
FIBER PREPARATION
15,000 GPD
DYEING
20,000 GPD
WASHING
10,000 GPD
DRYING
TO ATMOSPHERE
40,000 GPD
40,000 GPD
40,000 GPD
10,000 GPD
TO PRODUCT 5,000 GPD
SOLID WASTE
4,000 GPD
GRIT SEPARATOR
NEUTRALIZATION TANK
LOSS
6,000 GPD
WASTE TREATMENT PLANT - 2
36,000 GPD
34,000 GPD
OUTFALL 002 50,000 GPD
STORM WATER
MAX: 20,000 GPD
WASTE TREATMENT PLANT - 1
70,000 GPD + STORM WATER OUTFALL 001
SCHEMATIC OF WATER FLOW
BROWN MILLS INC
CITY, COUNTY, STATE

Please print or type in the unshaded areas only.

Form Approved. OMB No. 2040-0086.

FORM 1 GENERAL

EPA

U.S. ENVIRONMENTAL PROTECTION AGENCY

GENERAL INFORMATION

Consolidated Permits Program

(Read the "General Instructions" before starting.)

I. EPA I.D. NUMBER

S		T/A	C
F	AL0069221		D
1	2 13	14	15

LABEL ITEMS	
I. EPA I.D. NUMBER	PLEASE PLACE LABEL IN THIS SPACE
III. FACILITY NAME	
V. FACILITY MAILING ADDRESS	
VI. FACILITY LOCATION	

GENERAL INSTRUCTIONS

If a preprinted label has been provided, affix it in the designated space. Review the information carefully; if any of it is incorrect, cross through it and enter the correct data in the appropriate fill-in area below. Also, if any of the preprinted data is absent *(the area to the left of the label space lists the information that should appear)*, please provide it in the proper fill-in area(s) below. If the label is complete and correct, you need not complete Items I, III, V, and VI *(except VI-B which must be completed regardless)*. Complete all items if no label has been provided. Refer to the instructions for detailed item descriptions and for the legal authorizations under which this data is collected.

II. POLLUTANT CHARACTERISTICS

INSTRUCTIONS: Complete A through J to determine whether you need to submit any permit application forms to the EPA. If you answer "yes" to any questions, you must submit this form and the supplemental form listed in the parenthesis following the question. Mark "X" in the box in the third column if the supplemental form is attached. If you answer "no" to each question, you need not submit any of these forms. You may answer "no" if your activity is excluded from permit requirements; see Section C of the instructions. See also, Section D of the instructions for definitions of **bold-faced terms**.

SPECIFIC QUESTIONS	Mark "X" YES	NO	FORM ATTACHED	SPECIFIC QUESTIONS	Mark "X" YES	NO	FORM ATTACHED
A. Is this facility a **publicly owned treatment works** which results in a **discharge** to **waters of the U.S.**? (FORM 2A)		X		B. Does or will this facility *(either existing or proposed)* include a **concentrated animal feeding operation** or **aquatic animal production facility** which results in a **discharge** to **waters of the U.S.**? (FORM 2B)		X	
	16	17	18		19	20	21
C. Is this a facility which currently results in **discharges** to **waters of the U.S.** other than those described in A or B above? (FORM 2C)	X			D. Is this a proposed facility *(other than those described in A or B above)* which will result in a **discharge** to **waters of the U.S.**? (FORM 2D)		X	
	22	23	24		25	26	27
E. Does or will this facility treat, store, or dispose of **hazardous wastes**? (FORM 3)		X		F. Do you or will you inject at this facility industrial or municipal effluent below the lowermost stratum containing, within one quarter mile of the well bore, underground sources of drinking water? (FORM 4)		X	
	28	29	30		31	32	33
G. Do you or will you inject at this facility any produced water or other fluids which are brought to the surface in connection with conventional oil or natural gas production, inject fluids used for enhanced recovery of oil or natural gas, or inject fluids for storage of liquid hydrocarbons? (FORM 4)		X		H. Do you or will you inject at this facility fluids for special processes such as mining of sulfur by the Frasch process, solution mining of minerals, in situ combustion of fossil fuel, or recovery of geothermal energy? (FORM 4)		X	
	34	35	36		37	38	39
I. Is this facility a proposed **stationary source** which is one of the 28 industrial categories listed in the instructions and which will potentially emit 100 tons per year of any air pollutant regulated under the Clean Air Act and may affect or be located in an attainment area? (FORM 5)		X		J. Is this facility a proposed **stationary source** which is NOT one of the 28 industrial categories listed in the instructions and which will potentially emit 250 tons per year of any air pollutant regulated under the Clean Air Act and may affect or be located in an **attainment area**? (FORM 5)		X	
	40	41	42		43	44	45

III. NAME OF FACILITY

C 1 SKIP Weyerhaeuser NR Company, Millport Landfill

15 16 – 29 30 69

IV. FACILITY CONTACT

A. NAME & TITLE *(last, first, & title)*: C 2 Christopher Hopf (15–45)

B. PHONE *(area code & no.)*: (205) 596-1197 (46–55)

V. FACILTY MAILING ADDRESS

A. STREET OR P.O. BOX: C 3 14715 Highway 96 (15–45)

B. CITY OR TOWN	C. STATE	D. ZIP CODE
C 4 Millport (15–40)	AL (41–42)	35576 (47–51)

VI. FACILITY LOCATION

A. STREET, ROUTE NO. OR OTHER SPECIFIC IDENTIFIER: C 5 Near the intersection of Mt. Carmel Road and Odom Road (15–45)

B. COUNTY NAME: Lamar (46–70)

C. CITY OR TOWN	D. STATE	E. ZIP CODE	F. COUNTY CODE *(if known)*
C 6 Millport (15–40)	AL (41–42)	35576 (47–51)	(52–54)

RECEIVED JAN 11 2016 IND. MUN BRANCH

CONTINUE ON REVERSE

CONTINUED FROM THE FRONT

VII. SIC CODES *(4-digit, in order of priority)*

A. FIRST	B. SECOND
7 4953 *(specify)* Wood Waste Landfill	7 *(specify)*
C. THIRD	**D. FOURTH**
7 *(specify)*	7 *(specify)*

VIII. OPERATOR INFORMATION

A. NAME	B. Is the name listed in Item VIII-A also the owner?
8 Weyerhaeuser NR Company	☑ YES ☐ NO

C. STATUS OF OPERATOR *(Enter the appropriate letter into the answer box: if "Other," specify.)*			D. PHONE *(area code & no.)*
F = FEDERAL S = STATE P = PRIVATE	M = PUBLIC *(other than federal or state)* O = OTHER *(specify)*	P *(specify)*	A (205) 596-3311

E. STREET OR P.O. BOX
14715 Highway 96

F. CITY OR TOWN	G. STATE	H. ZIP CODE	IX. INDIAN LAND
8 Millport	AL	35576	Is the facility located on Indian lands? ☐ YES ☑ NO

X. EXISTING ENVIRONMENTAL PERMITS

A. NPDES *(Discharges to Surface Water)*	D. PSD *(Air Emissions from Proposed Sources)*
9 N AL0069221	9 P
B. UIC *(Underground Injection of Fluids)*	**E. OTHER** *(specify)*
9 U	9 38-06 *(specify)* Solid Waste
C. RCRA *(Hazardous Wastes)*	**E. OTHER** *(specify)*
9 R	9 *(specify)*

XI. MAP

Attach to this application a topographic map of the area extending to at least one mile beyond property boundaries. The map must show the outline of the facility, the location of each of its existing and proposed intake and discharge structures, each of its hazardous waste treatment, storage, or disposal facilities, and each well where it injects fluids underground. Include all springs, rivers, and other surface water bodies in the map area. See instructions for precise requirements.

XII. NATURE OF BUSINESS *(provide a brief description)*

Wood wastes from the nearby Weyerhaeuser lumber mill is hauled to the landfill for disposal.

XIII. CERTIFICATION *(see instructions)*

I certify under penalty of law that I have personally examined and am familiar with the information submitted in this application and all attachments and that, based on my inquiry of those persons immediately responsible for obtaining the information contained in the application, I believe that the information is true, accurate, and complete. I am aware that there are significant penalties for submitting false information, including the possibility of fine and imprisonment.

A. NAME & OFFICIAL TITLE *(type or print)*	B. SIGNATURE	C. DATE SIGNED
Steve Higdon, Facility Manager	Steve Higdon	12-23-15

COMMENTS FOR OFFICIAL USE ONLY

C

Please print or type in the unshaded areas only.

EPA ID Number (*copy from Item 1 of Form 1*)
AL0069221

Form Approved. OMB No. 2040-0086
Approval expires 5-31-92

FORM **2F** NPDES

U.S. Environmental Protection Agency
Washington, DC 20460

Application for Permit to Discharge Storm Water Discharges Associated with Industrial Activity

Paperwork Reduction Act Notice

Public reporting burden for this application is estimated to average 28.6 hours per application, including time for reviewing instructions, searching existing data sources, gathering and maintaining the data needed, and completing and reviewing the collection of information. Send comments regarding the burden estimate, any other aspect of this collection of information, or suggestions for improving this form, including suggestions which may increase or reduce this burden to: Chief, Information Policy Branch, PM-223, U.S. Environmental Protection Agency, 1200 Pennsylvania Avenue, NW, Washington, DC 20460, or Director, Office of Information and Regulatory Affairs, Office of Management and Budget, Washington, DC 20503.

I. Outfall Location

For each outfall, list the latitude and longitude of its location to the nearest 15 seconds and the name of the receiving water.

A. Outfall Number (*list*)	B. Latitude			C. Longitude			D. Receiving Water (*name*)
DSN001	33.00	31.00	45.00	88.00	1.00	30.00	unnamed tributary to Rushing Creek

II. Improvements

A. Are you now required by any Federal, State, or local authority to meet any implementation schedule for the construction, upgrading or operation of wastewater treatment equipment or practices or any other environmental programs which may affect the discharges described in this application? This includes, but is not limited to, permit conditions, administrative or enforcement orders, enforcement compliance schedule letters, stipulations, court orders, and grant or loan conditions.

1. Identification of Conditions, Agreements, Etc.	2. Affected Outfalls		3. Brief Description of Project	4. Final Compliance Date	
	number	source of discharge		a. req.	b. proj.
NA					

B: You may attach additional sheets describing any additional water pollution (or other environmental projects which may affect your discharges) you now have under way or which you plan. Indicate whether each program is now under way or planned, and indicate your actual or planned schedules for construction.

III. Site Drainage Map

Attach a site map showing topography (or indicating the outline of drainage areas served by the outfalls(s) covered in the application if a topographic map is unavailable) depicting the facility including: each of its intake and discharge structures; the drainage area of each storm water outfall; paved areas and buildings within the drainage area of each storm water outfall, each known past or present areas used for outdoor storage of disposal of significant materials, each existing structural control measure to reduce pollutants in storm water runoff, materials loading and access areas, areas where pesticides, herbicides, soil conditioners and fertilizers are applied; each of its hazardous waste treatment, storage or disposal units (including each area not required to have a RCRA permit which is used for accumulating hazardous waste under 40 CFR 262.34); each well where fluids from the facility are injected underground; springs, and other surface water bodies which received storm water discharges from the facility.

RECEIVED
JAN 11 2016
IND. MUN BRANCH

Continue on Page 2

Continued from the Front

IV. Narrative Description of Pollutant Sources

A. For each outfall, provide an estimate of the area (include units) of impervious surfaces (including paved areas and building roofs) drained to the outfall, and an estimate of the total surface area drained by the outfall.

Outfall Number	Area of Impervious Surface *(provide units)*	Total Area Drained *(provide units)*	Outfall Number	Area of Impervious Surface *(provide units)*	Total Area Drained *(provide units)*
DSN001	0 square feet	991,000 square feet			

B. Provide a narrative description of significant materials that are currently or in the past three years have been treated, stored or disposed in a manner to allow exposure to storm water; method of treatment, storage, or disposal; past and present materials management practices employed to minimize contact by these materials with storm water runoff; materials loading and access areas, and the location, manner, and frequency in which pesticides, herbicides, soil conditioners, and fertilizers are applied.

The Weyerhaeuser NR Company Millport landfill accepts wood waste from the nearby Weyerhaeuser NR Company Millport lumber mill. This waste consists of bark, wood chips, short logs, butt trimmimgs, scrap lumber, ash and metal bands. The waste delivered to the site is spread out by a dozer and an earthen cover applied. Areas of the landfill not in use are capped and vegetated. Common fertilizers are applied as directed, but no pesticides or herbicides are used.

C. For each outfall, provide the location and a description of existing structural and nonstructural control measures to reduce pollutants in storm water runoff; and a description of the treatment the storm water receives, including the schedule and type of maintenance for control and treatment measures and the ultimate disposal of any solid or fluid wastes other than by discharge.

Outfall Number	Treatment	List Codes from Table 2F-1
DSN001	Vegetation is established on the landfill surface. Drainage ditches are used to reroute external runoff. Rip rap is used at the outfall to prevent erosion and slow down the flow of water.	NA

V. Nonstormwater Discharges

A. I certify under penalty of law hat the outfall(s) covered by this application have been tested or evaluated for the presence of nonstormwater discharges, and that all nonstormwater discharged from these outfall(s) are identified in either an accompanying Form 2C or From 2E application for the outfall.

Name and Official Title *(type or print)*	Signature	Date Signed
Steve Higdon, Facility Manager		

B. Provide a description of the method used, the date of any testing, and the onsite drainage points that were directly observed during a test.

Since there are no industrial processes at this landfill site, no nonstormwater discharges can occur.

VI. Significant Leaks or Spills

Provide existing information regarding the history of significant leaks or spills of toxic or hazardous pollutants at the facility in the last three years, including the approximate date and location of the spill or leak, and the type and amount of material released.

No leaks or spills have occurred.

 Continue on Page 3

Continued from Page 2

EPA ID Number *(copy from Item 1 of Form 1)*

VII. Discharge Information

A, B, C, & D: See instructions before proceeding. Complete one set of tables for each outfall. Annotate the outfall number in the space provided. Table VII-A, VII-B, VII-C are included on separate sheets numbers VII-1 and VII-2.

E. Potential discharges not covered by analysis – is any toxic pollutant listed in table 2F-2, 2F-3, or 2F-4, a substance or a component of a substance which you currently use or manufacture as an intermediate or final product or byproduct?

☐ Yes (*list all such pollutants below*) ☑ No (*go to Section IX*)

VIII. Biological Toxicity Testing Data

Do you have any knowledge or reason to believe that any biological test for acute or chronic toxicity has been made on any of your discharges or on a receiving water in relation to your discharge within the last 3 years?

☐ Yes (*list all such pollutants below*) ☑ No (*go to Section IX*)

IX. Contract Analysis Information

Were any of the analyses reported in Item VII performed by a contract laboratory or consulting firm?

☑ Yes (*list the name, address, and telephone number of, and pollutants analyzed by, each such laboratory or firm below*) ☐ No (*go to Section X*)

A. Name	B. Address	C. Area Code & Phone No.	D. Pollutants Analyzed
American Interplex Corp.	8600 Kanis Road, Little Rock, AR 72204	(501) 224-5060	See Item VII. Discharge Information

X. Certification

I certify under penalty of law that this document and all attachments were prepared under my direction or supervision in accordance with a system designed to assure that qualified personnel properly gather and evaluate the information submitted. Based on my inquiry of the person or persons who manage the system or those persons directly responsible for gathering the information, the information submitted is, to the best of my knowledge and belief, true, accurate, and complete. I am aware that there are significant penalties for submitting false information, including the possibility of fine and imprisonment for knowing violations.

A. Name & Official Title (*Type Or Print*)	B. Area Code and Phone No.
Steve Higdon, Facility Manager	(205) 596-3311
C. Signature	D. Date Signed
Steve Higdon	12-23-15

EPA ID Number (*copy from Item 1 of Form 1*)
MS0069221

Form Approved. OMB No. 2040-0086
Approval expires 5-31-92

VII. Discharge information *(Continued from page 3 of Form 2F)*

Part A – You must provide the results of at least one analysis for every pollutant in this table. Complete one table for each outfall. See instructions for additional details.

Pollutant and CAS Number *(if available)*	Maximum Values *(include units)*		Average Values *(include units)*		Number of Storm Events Sampled	Sources of Pollutants
	Grab Sample Taken During First 20 Minutes	Flow-Weighted Composite	Grab Sample Taken During First 20 Minutes	Flow-Weighted Composite		
Oil and Grease	<5 mg/L	N/A			1.00	NA
Biological Oxygen Demand (BOD5)	2.2 mg/L	<2 mg/L			1.00	NA
Chemical Oxygen Demand (COD)	51 mg/L	61 mg/L			1.00	NA
Total Suspended Solids (TSS)	28 mg/L	16 mg/L			1.00	NA
Total Nitrogen	3.9 mg/L	6 mg/L			1.00	NA
Total Phosphorus	0.061 mg/L	0.051 mg/L			1.00	NA
pH	Minimum 7.10	Maximum 7.10	Minimum	Maximum	1.00	NA

Part B – List each pollutant that is limited in an effluent guideline which the facility is subject to or any pollutant listed in the facility's NPDES permit for its process wastewater (if the facility is operating under an existing NPDES permit). Complete one table for each outfall. See the instructions for additional details and requirements.

Pollutant and CAS Number *(if available)*	Maximum Values *(include units)*		Average Values *(include units)*		Number of Storm Events Sampled	Sources of Pollutants
	Grab Sample Taken During First 20 Minutes	Flow-Weighted Composite	Grab Sample Taken During First 20 Minutes	Flow-Weighted Composite		
TotRec Arsenic	0.0086 mg/L	<0.05 mg/L			1.00	NA
TotRec Chromium	<0.007 mg/L	<0.007 mg/L			1.00	NA
TotRec Copper	<0.006 mg/L	<0.006 mg/L			1.00	NA
TotOrg Carbon	10 mg/L	11 mg/L			1.00	NA

 Continue on Reverse

Continued from the Front

Part C - List each pollutant shown in Table 2F-2, 2F-3, and 2F-4 that you know or have reason to believe is present. See the instructions for additional details and requirements. Complete one table for each outfall.

Pollutant and CAS Number *(if available)*	Maximum Values *(include units)*		Average Values *(include units)*		Number of Storm Events Sampled	Sources of Pollutants
	Grab Sample Taken During First 20 Minutes	Flow-Weighted Composite	Grab Sample Taken During First 20 Minutes	Flow-Weighted Composite		

Part D – Provide data for the storm event(s) which resulted in the maximum values for the flow weighted composite sample.

1. Date of Storm Event	2. Duration of Storm Event *(in minutes)*	3. Total rainfall during storm event *(in inches)*	4. Number of hours between beginning of storm measured and end of previous measurable rain event	5. Maximum flow rate during rain event *(gallons/minute or specify units)*	6. Total flow from rain event *(gallons or specify units)*
11/18/15	4 hours	2.1 inches	>72 hours	452.5 gal/min	481,254 gal

7. Provide a description of the method of flow measurement or estimate.

The Total Flow was estimated using Total Flow = Total Rainfall (Ft) x Area (SF) x Runoff Coeffcient (0.37) x 7.5

The Flow Rate was determined using the depth of flow in the outfall (discharge) pipe and converting to gal/min.

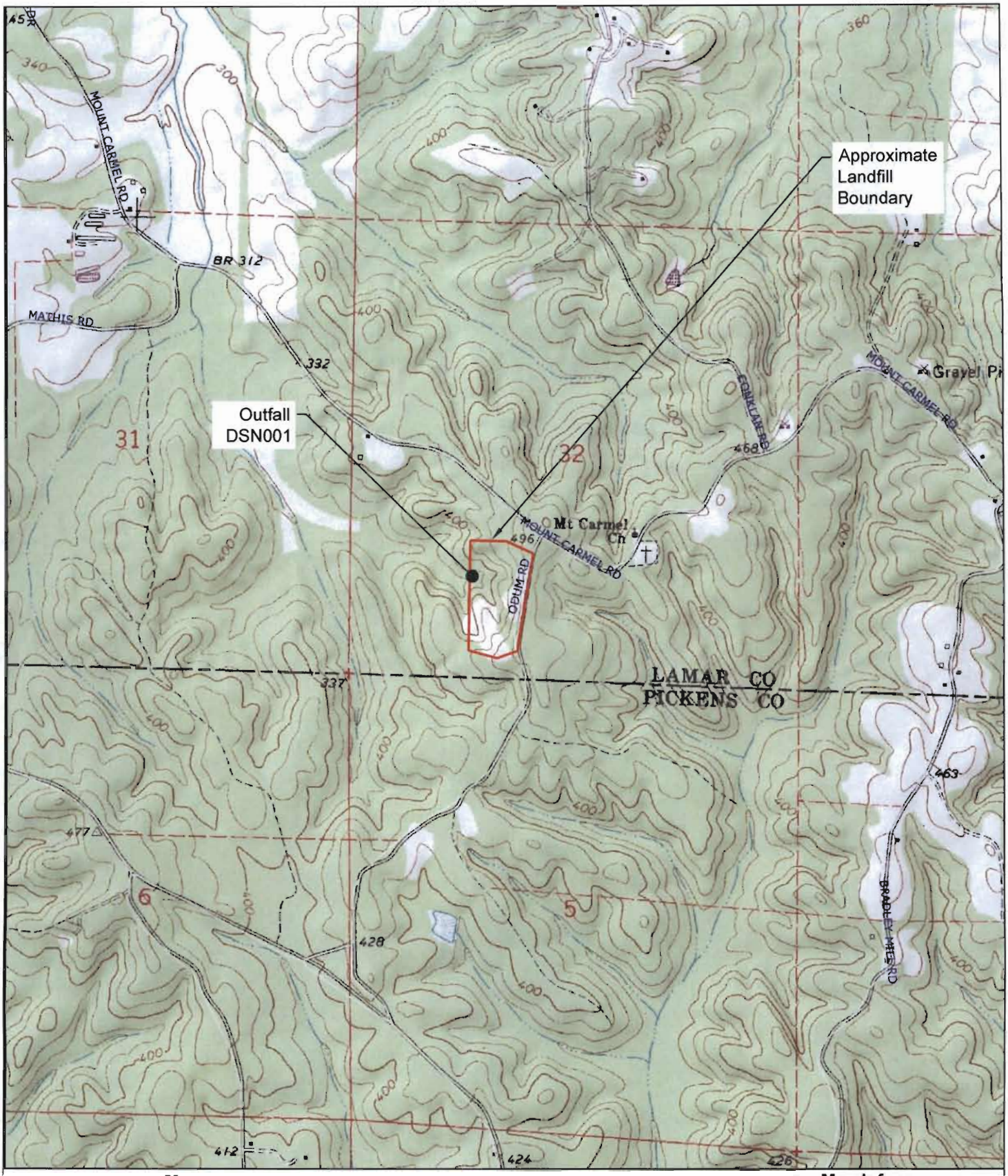

N

0 0.5 Mi

0 2000 Ft

Map Info:
USGS Quad Map
Millport, AL 1985

FC&E Engineering, LLC
Water • Soils • Air • Compliance

FC&E Engineering, LLC
917 Marquette Road
Brandon, Mississippi
www.fce-engineering.com

Weyerhaeuser NR Company
Millport Wood Waste Landfill
Millport, Lamar County, Alabama

Figure Number: 1
Figure Name: Site Location Map
Project: NPDES Application
Drawn By: CC
Date Drawn: December 10, 2015

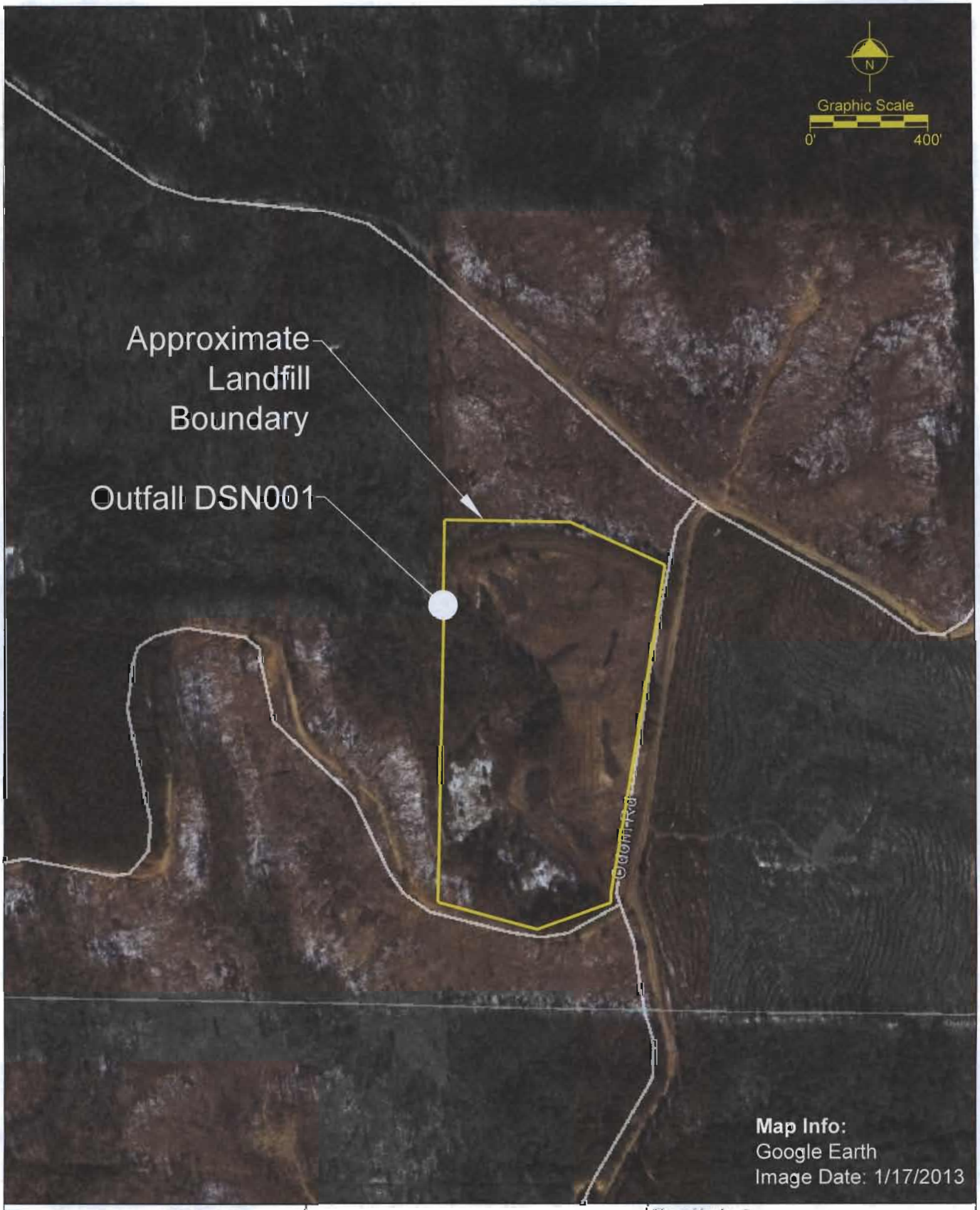

FC&E Engineering, LLC
917 Marquette Road
Brandon, Mississippi
www.fce-engineering.com

Weyerhaeuser NR Company
Millport Wood Waste Landfill
Millport, Lamar County, Alabama

Figure Number: 2
Figure Name: Aerial Map
Project: NPDES Application
Drawn By: CC
Date Drawn: December 10, 2015

Figure No. 3 – Weyerhaeuser NR Company, Millport Landfill

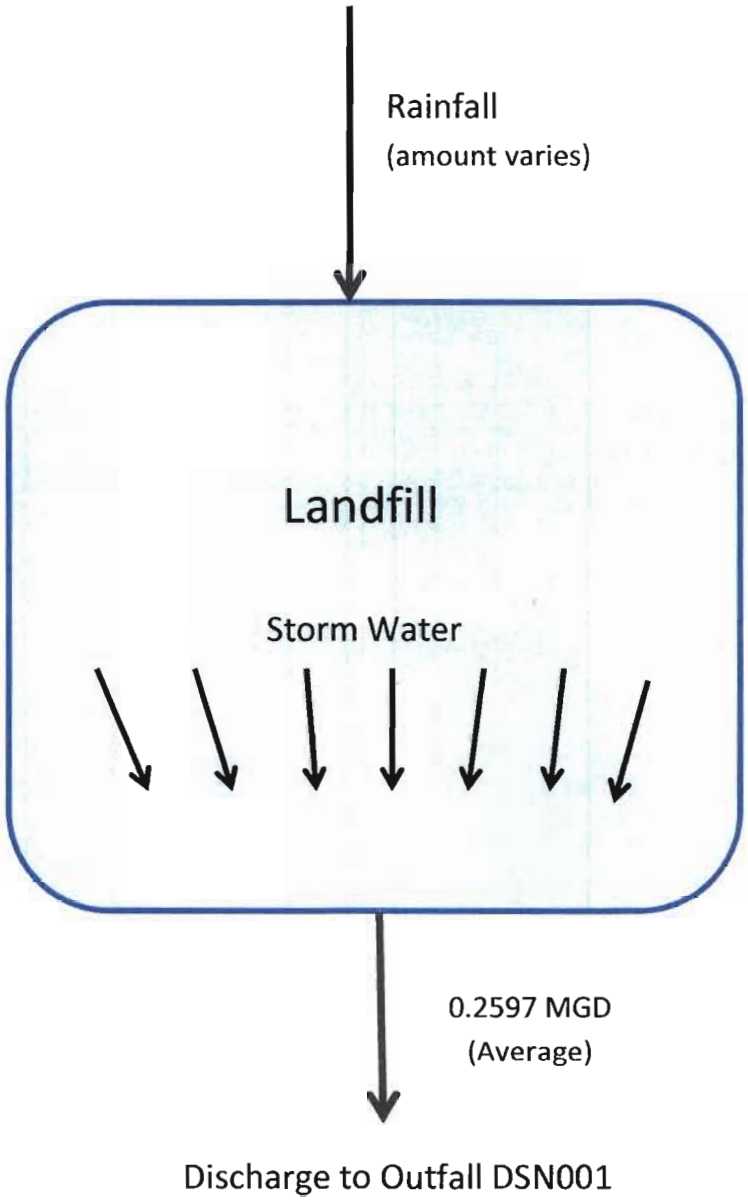

AMERICAN INTERPLEX CORPORATION
LABORATORIES

Weyerhaeuser NR Company
ATTN: Mr. Christopher Hopf
14715 Hwy 96
Milliport, AL 35576

This report contains the analytical results and supporting information for the sample submitted on November 19, 2015. Attached please find a copy of the Chain of Custody and/or other documents received. Note that any remaining sample will be discarded two weeks from the original report date unless other arrangements are made.

This report is intended for the sole use of the client listed above. Assessment of the data requires access to the entire document.

This report has been reviewed by the Chief Operating Officer or a qualified designee.

John Overbey
Chief Operating Officer

This document has been distributed to the following:

PDF cc: Weyerhaeuser NR Company
ATTN: Mr. Christopher Hopf
christopher.hopf@weyerhaeuser.com

AMERICAN INTERPLEX CORPORATION
LABORATORIES

Weyerhaeuser NR Company
14715 Hwy 96
Milliport, AL 35576

SAMPLE INFORMATION

Project Description:
One (1) water sample(s) received on November 19, 2015
AL0069221 Landfill

Receipt Details:
A Chain of Custody was provided. The samples were delivered in one (1) ice chest.
Ice chest #1 was delivered with shipping documentation.

Each sample container was checked for proper labeling, including date and time sampled. Sample containers were reviewed for proper type, adequate volume, integrity, temperature, preservation, and holding times. Any exceptions are noted below:

Sample Identification:

Laboratory ID	Client Sample ID	Sampled Date/Time	Notes
196442-1	Millport Landfill	18-Nov-2015 0700	

Qualifiers:
D Result is from a secondary dilution factor

References:
"Methods for Chemical Analysis of Water and Wastes", EPA/600/4-79-020 (Mar 1983) with updates and supplements EPA/600/5-91-010 (Jun 1991), EPA/600/R-92-129 (Aug 1992) and EPA/600/R-93-100 (Aug 1993).
"Test Methods for Evaluating Solid Waste Physical/Chemical Methods (SW846)", Third Edition.
"Standard Methods for the Examination of Water and Wastewaters", (SM).
"American Society for Testing and Materials" (ASTM).
"Association of Analytical Chemists" (AOAC).

AMERICAN INTERPLEX CORPORATION
LABORATORIES

Weyerhaeuser NR Company
14715 Hwy 96
Milliport, AL 35576

ANALYTICAL RESULTS

AIC No. 196442-1
Sample Identification: Millport Landfill 18-Nov-2015 0700

Analyte		Result	RL	Units	Qualifier
Total Kjeldahl Nitrogen		**3.4**	1	**mg/l**	D
EPA 351.2	Prep: 20-Nov-2015 1605 by 319	Analyzed: 24-Nov-2015 1037 by 308		Batch: W53984	Dil: 10
Total Organic Carbon		**10**	2	**mg/l**	D
EPA 9060A	Prep: 20-Nov-2015 1651 by 93	Analyzed: 20-Nov-2015 2351 by 93		Batch: W53987	Dil: 2
COD		**51**	10	**mg/l**	
HACH 8000	Prep: 23-Nov-2015 0925 by 271	Analyzed: 23-Nov-2015 1600 by 271		Batch: W53993	
Total Organic Nitrogen		**3.4**	1	**mg/l**	
SM 4500-NH3 B,E,G		Analyzed: 24-Nov-2015 1217 by 319		Batch: W54012	
Ammonia as N		**< 0.1**	0.1	**mg/l**	
SM 4500-NH3 G 1997	Prep: 23-Nov-2015 1103 by 319	Analyzed: 23-Nov-2015 1628 by 308		Batch: W54000	
BOD 5-day		**2.2**	2	**mg/l**	
SM 5210 B 2001	Prep: 20-Nov-2015 0645 by 271	Analyzed: 25-Nov-2015 0933 by 271		Batch: W53972	
Total Suspended Solids		**28**	4	**mg/l**	
USGS 3765	Prep: 20-Nov-2015 0928 by 308	Analyzed: 20-Nov-2015 1343 by 308		Batch: W53978	
Phosphorus		**0.061**	0.02	**mg/l**	
EPA 200.7	Prep: 19-Nov-2015 1615 by 317	Analyzed: 20-Nov-2015 0903 by 317		Batch: S40145	
Arsenic		**0.0086**	0.0005	**mg/l**	
EPA 3010A, 6020A	Prep: 23-Nov-2015 1001 by 317	Analyzed: 23-Nov-2015 1409 by 317		Batch: S40163	
Chromium		**< 0.007**	0.007	**mg/l**	
EPA 3010A, 6020A	Prep: 23-Nov-2015 1001 by 317	Analyzed: 23-Nov-2015 1409 by 317		Batch: S40163	
Copper		**< 0.006**	0.006	**mg/l**	
EPA 3010A, 6020A	Prep: 23-Nov-2015 1001 by 317	Analyzed: 23-Nov-2015 1409 by 317		Batch: S40163	
Nitrate + Nitrite as N		**< 0.5**	0.5	**mg/l**	D
EPA 9056A	Prep: 19-Nov-2015 1601 by 07	Analyzed: 20-Nov-2015 0421 by 07		Batch: C18292	Dil: 10
Oil and Grease		**< 5**	5	**mg/l**	
EPA 1664A	Prep: 25-Nov-2015 1508 by 306	Analyzed: 25-Nov-2015 1555 by 306		Batch: B9781	

AMERICAN INTERPLEX CORPORATION
LABORATORIES

Weyerhaeuser NR Company
14715 Hwy 96
Milliport, AL 35576

DUPLICATE RESULTS

Analyte		AIC No.	Result	RPD	RPD Limit	Preparation Date	Analysis Date	Dil	Qual
BOD 5-day		196421-1	9.2 mg/l			20Nov15 0645 by 271	25Nov15 0917 by 271		
	Batch: W53972	Duplicate	9.2 mg/l	0.544	20.0	20Nov15 1355 by 271	25Nov15 0918 by 271		
Total Suspended Solids		196440-1	9.6 mg/l			20Nov15 0928 by 308	20Nov15 1343 by 308		
	Batch: W53978	Duplicate	10 mg/l	4.08	20.0	20Nov15 0928 by 308	20Nov15 1343 by 308		
Total Suspended Solids		196441-1	16 mg/l			20Nov15 0928 by 308	20Nov15 1343 by 308		
	Batch: W53978	Duplicate	16 mg/l	2.53	20.0	20Nov15 0928 by 308	20Nov15 1343 by 308		

LABORATORY CONTROL SAMPLE RESULTS

Analyte	Spike Amount	%	Limits	RPD	Limit	Batch	Preparation Date	Analysis Date	Dil	Qual
Total Kjeldahl Nitrogen	1 mg/l	91.2	80.0-120			W53984	20Nov15 1606 by 319	24Nov15 1017 by 308		
Total Organic Carbon	10 mg/l	102	80.0-120			W53987	20Nov15 1653 by 93	20Nov15 2118 by 93		
COD	100 mg/l	94.0	85.0-115			W53993	23Nov15 0925 by 271	23Nov15 1600 by 271		
Ammonia as N	1 mg/l	95.6	80.0-120			W54000	23Nov15 1104 by 319	23Nov15 1621 by 308		
BOD 5-day	200 mg/l	109	84.5-115			W53972	20Nov15 1355 by 271	25Nov15 0856 by 271		
Phosphorus	5 mg/l	98.0	85.0-115			S40145	19Nov15 1559 by 317	20Nov15 0841 by 317		
Arsenic	0.05 mg/l	92.3	85.0-115			S40163	23Nov15 1001 by 317	23Nov15 1334 by 317		
Chromium	0.05 mg/l	99.1	85.0-115			S40163	23Nov15 1001 by 317	23Nov15 1334 by 317		
Copper	0.05 mg/l	105	85.0-115			S40163	23Nov15 1001 by 317	23Nov15 1334 by 317		
Nitrate + Nitrite as N	8 mg/l	100	90.0-110			C18292	19Nov15 1544 by 07	19Nov15 2335 by 07		
Oil and Grease	40 mg/l	99.0	78.0-114			B9781	25Nov15 0924 by 280	25Nov15 1147 by 280		
	40 mg/l	104	78.0-114	5.41	20.0	B9781	25Nov15 0924 by 280	25Nov15 1147 by 280		

AMERICAN INTERPLEX CORPORATION
LABORATORIES

Weyerhaeuser NR Company
14715 Hwy 96
Milliport, AL 35576

MATRIX SPIKE SAMPLE RESULTS

Analyte	Sample	Spike Amount	%	Limits	Batch	Preparation Date	Analysis Date	Dil	Qual
Total Kjeldahl Nitrogen	196447-1	1 mg/l	85.8	80.0-120	W53984	20Nov15 1606 by 319	24Nov15 1020 by 308		
	196447-1	1 mg/l	100	80.0-120	W53984	20Nov15 1606 by 319	24Nov15 1022 by 308		
	Relative Percent Difference:		8.99	20.0	W53984				
Total Organic Carbon	196434-1	10 mg/l	90.5	80.0-120	W53987	20Nov15 1653 by 93	20Nov15 2144 by 93		
	196434-1	10 mg/l	88.5	80.0-120	W53987	20Nov15 1653 by 93	20Nov15 2157 by 93		
	Relative Percent Difference:		1.42	25.0	W53987				
COD	196433-1	100 mg/l	108	80.0-120	W53993	23Nov15 0925 by 271	23Nov15 1600 by 271		
	196433-1	100 mg/l	108	80.0-120	W53993	23Nov15 0925 by 271	23Nov15 1600 by 271		
	Relative Percent Difference:		0.00	10.0	W53993				
Ammonia as N	196490-3	1 mg/l	86.4	80.0-120	W54000	23Nov15 1104 by 319	23Nov15 1624 by 308		
	196490-3	1 mg/l	85.3	80.0-120	W54000	23Nov15 1104 by 319	23Nov15 1626 by 308		
	Relative Percent Difference:		1.28	25.0	W54000				
Phosphorus	196437-1	5 mg/l	97.4	75.0-125	S40145	19Nov15 1559 by 317	20Nov15 0843 by 317		
	196437-1	5 mg/l	97.5	75.0-125	S40145	19Nov15 1559 by 317	20Nov15 0846 by 317		
	Relative Percent Difference:		0.129	20.0	S40145				
Arsenic	196476-1	0.05 mg/l	88.5	75.0-125	S40163	23Nov15 1001 by 317	23Nov15 1340 by 317		
	196476-1	0.05 mg/l	88.8	75.0-125	S40163	23Nov15 1001 by 317	23Nov15 1346 by 317		
	Relative Percent Difference:		0.275	20.0	S40163				
Chromium	196476-1	0.05 mg/l	93.2	75.0-125	S40163	23Nov15 1001 by 317	23Nov15 1340 by 317		
	196476-1	0.05 mg/l	93.2	75.0-125	S40163	23Nov15 1001 by 317	23Nov15 1346 by 317		
	Relative Percent Difference:		0.00641	20.0	S40163				
Copper	196476-1	0.05 mg/l	100	75.0-125	S40163	23Nov15 1001 by 317	23Nov15 1340 by 317		
	196476-1	0.05 mg/l	100	75.0-125	S40163	23Nov15 1001 by 317	23Nov15 1346 by 317		
	Relative Percent Difference:		0.209	20.0	S40163				
Nitrate + Nitrite as N	196440-2	8 mg/l	103	80.0-120	C18292	19Nov15 1544 by 07	19Nov15 2356 by 07		
	196440-2	8 mg/l	103	80.0-120	C18292	19Nov15 1544 by 07	20Nov15 0017 by 07		
	Relative Percent Difference:		0.0120	10.0	C18292				

LABORATORY BLANK RESULTS

Analyte	Result	RL	PQL	QC Sample	Preparation Date	Analysis Date	Qual
Total Kjeldahl Nitrogen	< 1 mg/l	1	1	W53984-1	20Nov15 1606 by 319	24Nov15 1015 by 308	D
Total Organic Carbon	< 1 mg/l	1	1	W53987-1	20Nov15 1653 by 93	20Nov15 2105 by 93	
COD	< 10 mg/l	10	10	W53993-1	23Nov15 0925 by 271	23Nov15 1600 by 271	
Ammonia as N	< 0.1 mg/l	0.1	0.1	W54000-1	23Nov15 1104 by 319	23Nov15 1619 by 308	
BOD 5-day	< 2 mg/l	2	2	W53972-1	20Nov15 1355 by 271	25Nov15 0856 by 271	
Total Suspended Solids	< 4 mg/l	4	4	W53978-1	20Nov15 0928 by 308	20Nov15 1343 by 308	
Phosphorus	< 0.02 mg/l	0.02	0.02	S40145-1	19Nov15 1559 by 317	20Nov15 0838 by 317	
Arsenic	< 0.0005 mg/l	0.0005	0.0005	S40163-1	23Nov15 1001 by 317	23Nov15 1329 by 317	
Chromium	< 0.007 mg/l	0.007	0.007	S40163-1	23Nov15 1001 by 317	23Nov15 1329 by 317	
Copper	< 0.006 mg/l	0.006	0.006	S40163-1	23Nov15 1001 by 317	23Nov15 1329 by 317	
Nitrate + Nitrite as N	< 0.05 mg/l	0.05	0.05	C18292-1	19Nov15 1544 by 07	19Nov15 2314 by 07	
Oil and Grease	< 2 mg/l	2	5	B9781-1	25Nov15 0924 by 280	25Nov15 1147 by 280	

AMERICAN INTERPLEX

CHAIN OF CUSTODY / ANALYSIS REQUEST FORM

PAGE OF

Client: Weyerhaeuser - Millport

Project Reference: AL0069221 Landfill

Project Manager: Christopher Hopf

Sampled By: ~~Glen Stanford~~ Justin Bowen

PO No.

SAMPLE MATRIX

ANALYSES REQUESTED

AIC CONTROL NO: 196442

AIC PROPOSAL NO:

Carrier:

Received Temperature C 0.1

AIC No.	Sample Identification	Date/Time Collected	GRAB	COMP	WATER	SOIL		NO OF BOTTLES	Oil & Grease	Total Suspended Solids (TSS)	Total Organic Carbon (TOC)	Arsenic, Chromium, Copper								Remarks
1	Millport Landfill	11-18-15 7:00 AM	X		X			1	X											
1	Millport Landfill	11-18-15 7:00 AM	X		X			1		X										
1	Millport Landfill	11-18-15 7:00 AM	X		X			1			X									
1	Millport Landfill	11-18-15 7:00 AM	X		X			1				X								
																				Field pH calibration
		Container Type							G	P	P	P								on _____ @ _____
		Preservative							S		S	N								Buffer:

G = Glass P = Plastic V = VOA vials H = HCl to pH2 T = Sodium Thiosulfate
NO = none S = Sulfuric acid pH2 N = Nitric acid pH2 B = NaOH to pH12 Z = Zinc acetate

Turnaround Time Requested: (Please circle)
NORMAL or EXPEDITED IN ____ DAYS
Expedited results requested by: _____
Who should AIC contact with questior Sharon Vinson
Phone: 662-414-6116 Fax: _____
Report Attention to: Sharon Vinson
Report Address to:

Relinquished By:	Date/Time	Received By:	Date/Time
Justin Bowen	11-18-15 7:00 AM		
Relinquished By:	Date/Time	Received in Lab By:	Date/Time
		[signature]	11/19/15 0825

Comments: FedEx# 7817430 2774

Millport Lumber - Landfill

5/01

FORM 0060

AMERICAN INTERPLEX CORPORATION
LABORATORIES

Weyerhaeuser NR Company
ATTN: Mr. Christopher Hopf
14715 Hwy 96
Milliport, AL 35576

This report contains the analytical results and supporting information for the sample submitted on November 19, 2015. Attached please find a copy of the Chain of Custody and/or other documents received. Note that any remaining sample will be discarded two weeks from the original report date unless other arrangements are made.

This report is intended for the sole use of the client listed above. Assessment of the data requires access to the entire document.

This report has been reviewed by the Chief Operating Officer or a qualified designee.

John Overbey
Chief Operating Officer

This document has been distributed to the following:

PDF cc: Weyerhaeuser NR Company
ATTN: Mr. Christopher Hopf
christopher.hopf@weyerhaeuser.com

AMERICAN INTERPLEX CORPORATION
LABORATORIES

Weyerhaeuser NR Company
14715 Hwy 96
Milliport, AL 35576

SAMPLE INFORMATION

Project Description:
One (1) water sample(s) received on November 19, 2015
AL0069221 Landfill

Receipt Details:
A Chain of Custody was provided. The samples were delivered in one (1) ice chest.
Ice chest #1 was delivered with shipping documentation.

Each sample container was checked for proper labeling, including date and time sampled. Sample containers were reviewed for proper type, adequate volume, integrity, temperature, preservation, and holding times. Any exceptions are noted below:

Sample Identification:

Laboratory ID	Client Sample ID	Sampled Date/Time	Notes
196413-1	Millport Landfill	18-Nov-2015 1000	

Qualifiers:
D Result is from a secondary dilution factor

References:
"Methods for Chemical Analysis of Water and Wastes", EPA/600/4-79-020 (Mar 1983) with updates and supplements EPA/600/5-91-010 (Jun 1991), EPA/600/R-92-129 (Aug 1992) and EPA/600/R-93-100 (Aug 1993).
"Test Methods for Evaluating Solid Waste Physical/Chemical Methods (SW846)", Third Edition.
"Standard Methods for the Examination of Water and Wastewaters", (SM).
"American Society for Testing and Materials" (ASTM).
"Association of Analytical Chemists" (AOAC).

AMERICAN INTERPLEX CORPORATION
LABORATORIES

Weyerhaeuser NR Company
14715 Hwy 96
Milliport, AL 35576

ANALYTICAL RESULTS

AIC No. 196413-1
Sample Identification: Millport Landfill 18-Nov-2015 1000

Analyte		Result	RL	Units	Qualifier
Total Kjeldahl Nitrogen		**5.5**	1	**mg/l**	D
EPA 351.2	Prep: 20-Nov-2015 1605 by 319	Analyzed: 24-Nov-2015 1023 by 308		Batch: W53984	Dil: 10
Total Organic Carbon		**11**	2	**mg/l**	D
EPA 9060A	Prep: 20-Nov-2015 1651 by 93	Analyzed: 20-Nov-2015 2338 by 93		Batch: W53987	Dil: 2
COD		**61**	10	**mg/l**	
HACH 8000	Prep: 20-Nov-2015 0757 by 271	Analyzed: 20-Nov-2015 1050 by 271		Batch: W53974	
BOD 5-day		**< 2**	2	**mg/l**	
SM 5210 B 2001	Prep: 20-Nov-2015 0645 by 271	Analyzed: 25-Nov-2015 0921 by 271		Batch: W53972	
Total Suspended Solids		**16**	4	**mg/l**	
USGS 3765	Prep: 19-Nov-2015 1608 by 308	Analyzed: 20-Nov-2015 1110 by 308		Batch: W53968	
Phosphorus		**0.051**	0.02	**mg/l**	
EPA 3010A, 6010C	Prep: 19-Nov-2015 1558 by 317	Analyzed: 20-Nov-2015 0857 by 317		Batch: S40145	
Nitrate + Nitrite as N		**< 0.5**	0.5	**mg/l**	D
EPA 300.0	Prep: 19-Nov-2015 1405 by 07	Analyzed: 19-Nov-2015 1940 by 07		Batch: C18291	Dil: 10
Total Recoverable Arsenic		**< 0.05**	0.05	**mg/l**	
EPA 3010A, 6010C	Prep: 19-Nov-2015 1404 by 317	Analyzed: 19-Nov-2015 1547 by 317		Batch: S40138	
Total Recoverable Chromium		**< 0.007**	0.007	**mg/l**	
EPA 3010A, 6010C	Prep: 19-Nov-2015 1404 by 317	Analyzed: 19-Nov-2015 1547 by 317		Batch: S40138	
Total Recoverable Copper		**< 0.006**	0.006	**mg/l**	
EPA 3010A, 6010C	Prep: 19-Nov-2015 1404 by 317	Analyzed: 19-Nov-2015 1547 by 317		Batch: S40138	

AMERICAN INTERPLEX CORPORATION
LABORATORIES

Weyerhaeuser NR Company
14715 Hwy 96
Milliport, AL 35576

DUPLICATE RESULTS

Analyte		AIC No.	Result	RPD	RPD Limit	Preparation Date	Analysis Date	Dil	Qual
Total Suspended Solids		196395-1	21 mg/l			19Nov15 1608 by 308	20Nov15 1110 by 308		
	Batch: W53968	Duplicate	20 mg/l	5.94	20.0	19Nov15 1608 by 308	20Nov15 1110 by 308		
Total Suspended Solids		196399-1	30 mg/l			19Nov15 1608 by 308	20Nov15 1110 by 308		
	Batch: W53968	Duplicate	27 mg/l	12.6	20.0	19Nov15 1608 by 308	20Nov15 1110 by 308		
BOD 5-day		196421-1	9.2 mg/l			20Nov15 0645 by 271	25Nov15 0917 by 271		
	Batch: W53972	Duplicate	9.2 mg/l	0.544	20.0	20Nov15 1355 by 271	25Nov15 0918 by 271		

LABORATORY CONTROL SAMPLE RESULTS

Analyte	Spike Amount	%	Limits	RPD	Limit	Batch	Preparation Date	Analysis Date	Dil	Qual
Total Kjeldahl Nitrogen	1 mg/l	91.2	80.0-120			W53984	20Nov15 1606 by 319	24Nov15 1017 by 308		
Total Organic Carbon	10 mg/l	102	80.0-120			W53987	20Nov15 1653 by 93	20Nov15 2118 by 93		
COD	100 mg/l	94.0	85.0-115			W53974	20Nov15 0757 by 271	20Nov15 1050 by 271		
BOD 5-day	200 mg/l	109	84.5-115			W53972	20Nov15 1355 by 271	25Nov15 0856 by 271		
Phosphorus	5 mg/l	98.0	85.0-115			S40145	19Nov15 1559 by 317	20Nov15 0841 by 317		
Nitrate + Nitrite as N	8 mg/l	98.5	90.0-110			C18291	19Nov15 1406 by 07	19Nov15 1454 by 07		
Total Recoverable Arsenic	5 mg/l	95.2	85.0-115			S40138	19Nov15 0855 by 317	19Nov15 1448 by 317		
Total Recoverable Chromium	0.5 mg/l	94.0	85.0-115			S40138	19Nov15 0855 by 317	19Nov15 1448 by 317		
Total Recoverable Copper	0.5 mg/l	91.5	85.0-115			S40138	19Nov15 0855 by 317	19Nov15 1448 by 317		

AMERICAN INTERPLEX CORPORATION
LABORATORIES

Weyerhaeuser NR Company
14715 Hwy 96
Milliport, AL 35576

MATRIX SPIKE SAMPLE RESULTS

Analyte	Sample	Spike Amount	%	Limits	Batch	Preparation Date	Analysis Date	Dil	Qual
Total Kjeldahl Nitrogen	196447-1	1 mg/l	85.8	80.0-120	W53984	20Nov15 1606 by 319	24Nov15 1020 by 308		
	196447-1	1 mg/l	100	80.0-120	W53984	20Nov15 1606 by 319	24Nov15 1022 by 308		
	Relative Percent Difference:		8.99	20.0	W53984				
Total Organic Carbon	196434-1	10 mg/l	90.5	80.0-120	W53987	20Nov15 1653 by 93	20Nov15 2144 by 93		
	196434-1	10 mg/l	88.5	80.0-120	W53987	20Nov15 1653 by 93	20Nov15 2157 by 93		
	Relative Percent Difference:		1.42	25.0	W53987				
COD	196425-1	100 mg/l	101	80.0-120	W53974	20Nov15 0757 by 271	20Nov15 1050 by 271		
	196425-1	100 mg/l	103	80.0-120	W53974	20Nov15 0757 by 271	20Nov15 1050 by 271		
	Relative Percent Difference:		1.65	10.0	W53974				
Phosphorus	196437-1	5 mg/l	97.4	75.0-125	S40145	19Nov15 1559 by 317	20Nov15 0843 by 317		
	196437-1	5 mg/l	97.5	75.0-125	S40145	19Nov15 1559 by 317	20Nov15 0846 by 317		
	Relative Percent Difference:		0.129	20.0	S40145				
Nitrate + Nitrite as N	196416-2	8 mg/l	98.4	80.0-120	C18291	19Nov15 1406 by 07	19Nov15 1515 by 07		
	196416-2	8 mg/l	99.0	80.0-120	C18291	19Nov15 1406 by 07	19Nov15 1536 by 07		
	Relative Percent Difference:		0.532	10.0	C18291				
Total Recoverable Arsenic	196375-1	5 mg/l	97.3	75.0-125	S40138	19Nov15 0855 by 317	19Nov15 1452 by 317		
	196375-1	5 mg/l	97.5	75.0-125	S40138	19Nov15 0855 by 317	19Nov15 1455 by 317		
	Relative Percent Difference:		0.144	20.0	S40138				
Total Recoverable Chromium	196375-1	0.5 mg/l	92.2	75.0-125	S40138	19Nov15 0855 by 317	19Nov15 1452 by 317		
	196375-1	0.5 mg/l	93.9	75.0-125	S40138	19Nov15 0855 by 317	19Nov15 1455 by 317		
	Relative Percent Difference:		0.903	20.0	S40138				
Total Recoverable Copper	196375-1	0.5 mg/l	93.3	75.0-125	S40138	19Nov15 0855 by 317	19Nov15 1452 by 317		
	196375-1	0.5 mg/l	94.1	75.0-125	S40138	19Nov15 0855 by 317	19Nov15 1455 by 317		
	Relative Percent Difference:		0.914	20.0	S40138				

LABORATORY BLANK RESULTS

Analyte	Result	RL	PQL	QC Sample	Preparation Date	Analysis Date	Qual
Total Kjeldahl Nitrogen	< 1 mg/l	1	1	W53984-1	20Nov15 1606 by 319	24Nov15 1015 by 308	D
Total Organic Carbon	< 1 mg/l	1	1	W53987-1	20Nov15 1653 by 93	20Nov15 2105 by 93	
COD	< 10 mg/l	10	10	W53974-1	20Nov15 0757 by 271	20Nov15 1050 by 271	
BOD 5-day	< 2 mg/l	2	2	W53972-1	20Nov15 1355 by 271	25Nov15 0856 by 271	
Total Suspended Solids	< 4 mg/l	4	4	W53968-1	19Nov15 1608 by 308	20Nov15 1110 by 308	
Phosphorus	< 0.02 mg/l	0.02	0.02	S40145-1	19Nov15 1559 by 317	20Nov15 0838 by 317	
Nitrate + Nitrite as N	< 0.05 mg/l	0.05	0.05	C18291-1	19Nov15 1406 by 07	19Nov15 1413 by 07	
Total Recoverable Arsenic	< 0.05 mg/l	0.05	0.05	S40138-1	19Nov15 0855 by 317	19Nov15 1445 by 317	
Total Recoverable Chromium	< 0.007 mg/l	0.007	0.007	S40138-1	19Nov15 0855 by 317	19Nov15 1445 by 317	
Total Recoverable Copper	< 0.006 mg/l	0.006	0.006	S40138-1	19Nov15 0855 by 317	19Nov15 1445 by 317	

AMERICAN INTERPLEX CORPORATION LABORATORIES

CHAIN OF CUSTODY / ANALYSIS REQUEST FORM

Client: Weyerhaeuser - Millport
Project Reference: AL0069221 Landfill
Project Manager: Christopher Hoff
Sampled By: Justin Bowen

PO No.:

AIC CONTROL NO: 196413
AIC PROPOSAL NO:
Carrier:
Received Temperature C: 0.1

AIC No.	Sample Identification	Date/Time Collected	GRAB	COMP	MATRIX WATER	MATRIX SOIL		NO OF BOTTLES	BOD & TSS	COD	TKN	Nitrate-Nitrite	Total Phosphorus	TOC	As, Cr, Cu Total Recoverable						Remarks
1	Millport Landfill	11-18-15 10:00am		X	X			1	X												
1	Millport Landfill	11-18-15 10:00am		X	X			1		X											
1	Millport Landfill	11-18-15 10:00 am		X	X			1			X										
1	Millport Landfill	11-18-15 10:00 am		X	X			1				X									
1	Millport Landfill	11-18-15 10:00am		X	X			1					X								
1	Millport Landfill	11-18-15 10:00 am		X	X			1						X							
1	Millport Landfill	11-18-15 10:00 am		X	X			1							X						Field pH calibration
1	Millport Landfill	Container Type							P	P	P	P	P	P	P						on _____ @ _____
		Preservative							NO	S	S	S	S	S	N						Buffer:

G = Glass P = Plastic V = VOA vials H = HCl to pH2 T = Sodium Thiosulfate
NO = none S = Sulfuric acid pH2 N = Nitric acid pH2 B = NaOH to pH12 Z = Zinc acetate A=$(NH_4)_2SO_4$, NH_4OH

Turnaround Time Requested: (Please circle)
NORMAL or EXPEDITED IN ____ DAYS
Expedited results requested by: _____
Who should AIC contact with questions:
Phone: _____ Fax:
Report Attention to:
Report Address to:
Email Address:

Relinquished By:	Date/Time	Received By:	Date/Time
Justin Bowen	11-18-2015 10:00am		
Relinquished By:	Date/Time	Received in Lab By:	Date/Time
			11/19/15 0825

Comments: FedEx 7817 4302 3793

9/2014

FORM 0060

NPDES PERMIT RENEWAL APPLICATION
PERMIT NO. AL0069221

Weyerhaeuser

RECEIVED
JAN 11 2016
IND. MUN BRANCH

WEYERHAEUSER NR COMPANY
Millport Landfill

Millport, Alabama
Lamar County

Submittal Date: December 2015

PREPARED BY:

FC&E ENGINEERING, LLC
917 MARQUETTE ROAD
BRANDON, MISSISSIPPI 39042
(601) 824-1860

FC&E Engineering, LLC
Water • Soils • Air • Compliance

Weyerhaeuser

14715 Highway 96
Millport, Alabama 35576

Certified Mail No. 7013 1090 0001 7701 0454
Return Receipt Requested

RECEIVED
FEB 17 2016
IND. MUN BRANCH

February 12, 2016

Mr. Scott Ramsey, Chief
Industrial Section, Industrial/Municipal Branch
Water Division
Alabama Department of Environmental Management
P O Box 301463
Montgomery, Alabama 36130-1463

Dear Mr. Ramsey:

Re: Weyerhaeuser NR Company
NPDES Permit No. AL0069221
Landfill NPDES Application

Weyerhaeuser NR Company submitted the permit renewal application package for NPDES Permit No. AL0069221 for its Millport Landfill on December 23, 2016. Please find enclosed a check (0096850621) for the permit fee in the amount of $4680.00.

If you should have any questions, or need any additional information or clarification, please do not hesitate to contact me at 601-408-5766.

Sincerely,

Christopher Hopf,
Environmental Manager

Enclosures

Weyerhaeuser

14715 Highway 96
Millport, Alabama 35576

December 23, 2015

Mr. Scott Ramsey, Chief
Industrial Section, Industrial/Municipal Branch
Water Division
Alabama Department of Environmental Management
P O Box 301463
Montgomery, Alabama 36130-1463

RECEIVED
JAN 11 2016
IND. MUN BRANCH

Dear Mr. Ramsey:

Re: Weyerhaeuser NR Company
NPDES Permit No. AL0069221
Landfill NPDES Application

Weyerhaeuser NR Company is respectfully submitting the enclosed permit renewal application package for NPDES Permit No. AL0069221 for its Millport Landfill. The package includes ADEM Form 187 and EPA Forms 1 and 2F. The data shown in the application was taken from sampling completed during the current permit cycle. There have been no major changes to the site since the previous application submittal.

If you should have any questions, or need any additional information or clarification, please do not hesitate to contact Chris Hopf at 601-408-5766 or Rusty Lyons with FC&E Engineering at (601) 824-1860.

Sincerely,

Steve Higdon,
Unit Manager

cc: Rusty Lyons, PE, FC&E Engineering, LLC

Enclosures