From: Lockwood, Diane
Sent: Thursday, March 19, 2015 9:15 AM
To: ADEM Department-wide
Subject: Electtronic Transfer for $67,610.00

The State Treasury has notified us of an electronic transfer for $67,610 from DFAS. The EFT identifies ADEM as the recipient. Please let me know if you are looking for this amount.

From: Harrison, Brandy [mailto:Brandy.Harrison@treasury.alabama.gov]
Sent: Tuesday, March 17, 2015 8:16 AM
To: Lockwood, Diane
Subject: sterling deposit

Please certify money into account number 1031201.

```
ACDDAENT-01/ALA A L A B A M A T R A N S A C T I O N S R E P O R T 03-17-15 01:12 PAGE 1
FINANCIAL INSTITUTION: STERLING BANK
BANK NUMBER: 725
-------------------------------------------------------------------------------------------------------------------------------
---------------
ACCOUNT NUMBER TRACE NUMBER/ TC TYPE/ AMOUNT/ CUSTOMER ID CUSTOMER TRAN/ABA COMPANY NAME/ ENTRY
EFF ENTRY DATE SEC DISC DATA NAME NUMBER ID DESCR
-------------------------------------------------------------------------------------------------------------------------------
---------------
0590001 041036009100167 22 CR $67,610.00 5039649685 0008ENVIRONMENTAL MA 062200440 DFAS-CLEVELAND GFEBS-ERP
03/17/15 CTX GF 3041036004
ADDENDA INFO: ISA*00* *00* *ZZ*00008522 *ZZ*DFAS-CLEVELAND *150316*163
```

Brandy Harrison
State of Alabama, Office of Treasurer Young Boozer
100 North Union Street Suite 676
Montgomery, Alabama 36130
Ph: (334) 242-7156 Fax: (334) 242-4242
Brandy.harrison@treasury.alabama.gov

DEPARTMENT OF THE ARMY
US ARMY INSTALLATION MANAGEMENT COMMAND
HEADQUARTERS, UNITED STATES ARMY GARRISON, REDSTONE
4488 MARTIN ROAD
REDSTONE ARSENAL, ALABAMA 35898-5000

MAY 2 6 2016

REPLY TO
ATTENTION OF

Environmental Management Division

Received
JUN 2 2016
Land Division

Mr. Russell A. Kelly
Chief, Permits and Services Division
Alabama Department of Environmental Management
Post Office Box 301463
Montgomery, AL 36130-1463

Dear Mr. Kelly:

References:

a. Installation Restoration Program at Redstone Arsenal, Alabama (EPA ID AL7 210 020 742).

b. Redstone Arsenal's Alabama Hazardous Wastes Management and Minimization Act Hazardous Waste Storage Facility/Thermal Treatment/Solid Waste Management Unit Corrective Action Permit, dated September 30, 2010 and Modification #7 dated May 5, 2016.

c. Alabama Department of Environmental Management (Department) email from Jeanne Barnes to Don Burton, CB&I Federal Services, LLC, dated May 19, 2016 regarding the Permit Modification Processing Fee and Fee Sheet for RSA-060.

As requested, enclosed is a check in the amount of $14,550.00 to the Department for the permit modification processing fee to modify the corrective measures implementation plan and permit conditions for RSA-060.

A copy of this correspondence is also being sent to Ms. Jeanne Barnes, Mr. Clark Davis and Mr. Jason Wilson, Alabama Department of Environmental Management.

My point of contact for this matter is Ms. Terry de la Paz, Environmental Management Division, 256-955-6968 or e-mail terry.m.delapaz.civ@mail.mil.

Sincerely,

Terry Hazle

Terry W. Hazle
Chief, Environmental Management
Division

HAZARDOUS WASTE PERMITS
FEE CALCULATION SHEET (effective February 4, 2016)

BASE APPLICATION	INITIAL UNIT	# OF UNITS	NEW/DESIGN ADDITIONAL UNIT	# OF UNITS	MINOR MOD	# OF UNITS	MAJOR MOD	# OF UNITS	CLOSURE PLAN	# OF UNITS
PERMIT TYPE										
Transport Hazardous Waste/Used Oil	$ 2,105		~~~		$ 1,138		$ 2,105		~~~	
Base Application (Non-Transporter)	$ 6,985		~~~		~~~		~~~		~~~	
Storage (Container, Tank, Containment Building)	$ 36,475		$ 27,520		$ 2,320		$ 9,025		$ 8,154	
Drip Pad	$ 36,475		$ 27,520		$ 2,320		$ 9,025		$ 8,154	
Treatment	$ 46,315		$ 34,820		$ 2,915		$ 11,430		$ 9,760	
Thermal Treatment	$ 111,550		$ 83,740		$ 7,205		$ 27,740		$ 9,760	
Land Treament	$ 62,550		$ 47,035		$ 3,940		$ 15,515		$ 18,590	
Waste Pile	$ 52,795		$ 39,760		$ 3,275		$ 13,030		$ 19,590	
Surface Impoundment	$ 85,410		$ 64,225		$ 5,400		$ 21,185		$ 19,590	
Landfill	$ 107,910		$ 81,040		$ 6,860		$ 26,585		$ 19,590	
Post-Closure	$ 82,135		$ 61,760		$ 5,110		$ 20,395		~~~	
SWMU Only	$ 16,310		~~~		$ 1,025		$ 4,070		~~~	
Miscellaneous Units	$ 93,780		$ 70,475		$ 5,820		$ 23,300		~~~	
Corrective Action Management Unit										
- Storage	$ 42,380		$ 31,825		$ 2,770		$ 10,640		$ 4,855	
- Treatment [except Land Treatment]	$ 42,380		$ 31,825		$ 2,770		$ 10,640		$ 5,820	
- Disposal/Land Treatment	$ 42,380		$ 31,825		$ 2,770		$ 10,640		$ 11,650	
Non-Unit Specific Modifications	~~~		~~~		$ 1,160		$ 5,400		~~~	
Modifications to Incorporate Final Corrective Measures	~~~		~~~		~~~		$ 14,550	1	~~~	
ADDITIVE FEES										
Groundwater Contamination										
- Plume Undefined	$ 61,960		$ 46,460		~~~		~~~		~~~	
- Plume Defined	$ 32,615		$ 24,410		~~~		~~~		~~~	
Trial Burn	$ 16,310		~~~		~~~		~~~		~~~	
RCRA Facility Assessment (RFA)	$ 16,310		~~~		~~~		~~~		~~~	
RCRA Facility Investigation (RFI) Certification	$ 24,470		$ 18,790		~~~		~~~		~~~	
Corrective Action Program (CAP) or Corrective Measures Implementation (CMI) Plan Certification	$ 42,390		$ 31,825		$ 2,780		$ 10,640		~~~	
Temporary Unit	$ 35,890		$ 26,946		$ 2,330		$ 8,950		$ 8,155	
Off-Site Waste Analysis Certification	$ 8,155		~~~		$ 810		$ 2,125		~~~	
Indirect Risk Assessment	$ 163,105		~~~		~~~		~~~		~~~	
Confirmatory Sampling (CS) Work Plan Certification	$ 20,395		$ 15,305		~~~		~~~		~~~	
Interim Measures (IM) Work Plan Certification	$ 20,395		$ 15,305		~~~		~~~		~~~	
Corrective Measures Study (CMS) Certification	$ 24,755		$ 18,935		~~~		~~~		~~~	
Greenfield Fee *	$ 1,610		~~~		~~~		~~~		~~~	
Name Change / Permit Transfer *	$ 800		~~~		~~~		~~~		~~~	
Public Hearing *	$ 8,450		~~~		~~~		~~~		~~~	

** Department-wide fee -- not an additive fee -- per ADEM Admin. Code r. 335-1-6-.04*

Applicant:	U.S. Army Garrison - Redstone	Total Fee Due:	$ 14,550
Location:	Huntville	Date and Amt. Submitted w/ Application:	
County:	Madison	Date and Amount Billed:	$ 14,550
Latitude/Longitude (decimal):	34.6/-86.7	Date and Amount Received:	
Master ID:	12514	Amount to be Refunded:	
Facility No.	AL7 210 020 742	Received By:	
Prepared By:	Jeanne M. Barnes		
Note:	Incorporate corrective measures at RSA-060		

THIS CHECK IS VOID WITHOUT A GREEN & BLUE BORDER AND BACKGROUND PLUS A KNIGHT & FINGERPRINT WATERMARK ON THE BACK - HOLD AT ANGLE TO VIEW

CB&I

CB&I FEDERAL SERVICES LLC
2103 RESEARCH FOREST DRIVE
THE WOODLANDS TX 77380

BMO HARRIS BANK N.A.
CHICAGO, ILLINOIS

2-28
710

CHECK NO. 1021742

DATE	AMOUNT
05/25/16	$******14,550.00

Void If Not Cashed In 60 Days

PAY *FOURTEEN THOUSAND FIVE HUNDRED FIFTY AND 00/100* **********

Protected By Positive Pay

TO THE ORDER OF
Alabama Dept of Environmental Management
P O Box 301463
Montgomery, AL 36130-1463

⑈01021742⑈ [redacted] 2⑈

CB&I Federal Services LLC

1224352 Alabama Dept of Environmental Management

CHECK NUMBER: 1021742
CHECK DATE: 05/25/16

INVOICE NUMBER	DATE	DESCRIPTION	GROSS	DEDUCTIONS	AMOUNT PAID
CKRQT051916	051916	EPA ID# AL7210020742	14,550.00	0.00	14,550.00
		TOTALS	$ 14,550.00	$ 0.00	$ 14,550.00

Detach Statement Before Depositing

REORDER 903 • U.S. PATENT NO. 5538290, 5575508, 5641183, 5785353, 5984364, 6030000

U.S. Army Garrison - Redstone
Huntsville, Madison County, Alabama
EPA I.D. Number AL 7 210 020 742

FACT SHEET

A draft Alabama Hazardous Waste Management and Minimization Act (AHWMMA) permit modification has been prepared for the Redstone Arsenal (RSA) facility. This hazardous waste facility is located in Huntsville, Madison County, Alabama. This fact sheet has been prepared to briefly advise the public of the principal permitting, legal and policy issues of the draft permit.

I. PERMIT PROCESS

The purpose of the permitting process is to allow the State and the public to evaluate RSA's ability to comply with the hazardous waste management requirements of the AHWMMA, as amended. RSA must comply with hazardous waste management conditions set forth in the permit during the effective period of the permit, which is ten (10) years from the last permit renewal (September 30, 2010).

II. PROCEDURES FOR REACHING A FINAL DECISION

The Alabama Department of Environmental Management (ADEM or Department) is proposing to issue a permit modification to include a third permittee, the U.S. Army Recovered Chemical Materiel Directorate (RCMD), and the addition of up to two Phase 2 explosive destruction system (EDS) units. In addition, the proposed permit modification includes corrective measures implementation for units RSA-204, RSA-227 and MSFC-027.

ADEM Admin. Code r. 335-14-8-.08(6)(b)1. requires that the public be given a 45-day comment period for each draft permit. The comment period will begin on December 23, 2016, which is the date of publication of the public notice in a major local newspaper of general circulation, and will end on February 8, 2017. The public notice will also be broadcast over local radio station(s).

Any person interested in commenting on the application or draft permit modification must do so within the 45-day comment period discussed above. All persons wishing to comment on any of the permit conditions or the permit modification application should submit their comments in writing to Mr. Russell A. Kelly at the Alabama Department of Environmental Management, Permits and Services Division, 1400 Coliseum Blvd. (zip 36110-2059), P.O. Box 301463 (zip 36130-1463) Montgomery, Alabama.

ADEM will consider all written comments received during the comment period while making a permit decision for this facility. When the Department makes its final permit decision, notice will be given to the applicant and each person who has submitted written comments or requested notice of the final permit decision.

III. FACILITY DESCRIPTION

Redstone Arsenal (RSA) is a contiguous U. S. Army installation operated by the U. S. Army Aviation and Missile Command. RSA is located in Madison County, Alabama, at latitude N34º 37' and longitude W86º 39'. RSA is bounded on the north by Interstate 565, on the east and northeast by the City of Huntsville, on the west and northwest by the City of Madison, and on the south by the Tennessee River. RSA is approximately 6 miles wide in an east to west direction and 10 miles long in a north to south direction. The installation occupies approximately 57.4 square miles or 37,910 acres.

RSA operates a hazardous waste facility that includes storage, the operation of Subpart X (Open Burning and Open Detonation Units or OB and OD) treatment facilities, and the implementation of investigation and corrective action for solid waste management units (SWMUs) and areas of concern (AOCs).

The hazardous waste storage area consists of 33 container storage igloos. The maximum storage capacity of each permitted hazardous waste storage igloo is 240 fifty-five gallon containers and the maximum storage capacity of all 33 units is 7920 fifty-five gallon drums or 435,600 total gallons. The Defense Logistics Agency (DLA) Disposition Services – Huntsville uses two of the igloos and is responsible for weekly inspections and day to day operations in accordance with regulatory requirements. The remaining storage units are managed by the Environmental Management Division (EMD) of U.S. Army Garrison – Redstone.

The OB/OD area is used to burn and detonate hazardous energetic waste having the characteristic of reactivity (D003) and explosiveness. The open burning area consists of five metal burn pans that each measure 9 by 20 feet. The pans are elevated on support steel and placed on top of concrete pads. The open detonation takes place inside the designated OD area, which is surrounded on three sides by earthen mounds. Each detonation is completed in a newly excavated pit. The permit sets forth the requirements for the OB and OD units to be maintained in compliance with federal Subpart X regulations that were promulgated in 1987.

Explosive destruction system (EDS) units are used to treat recovered munitions or other items that contain chemical agent or industrial chemical fills that may be recovered during SWMU remediation activities. Items to be treated may or may not have an explosive component. The units are comprised primarily of Containment Vessels. Items are loaded into the Containment Vessel, shape charges are used to access the chemical fill and detonate the munition burster explosives if present, and the exposed chemical fill is treated with reagent. The EDS units will be located within the 8200 block of igloos at the southern end of RSA.

The facility also includes current and former SWMUs and AOCs identified by Resource Conservation and Recovery Act (RCRA) Facility Assessments (RFA's) in 1988 and 2008. This permit sets forth SWMU corrective action requirements and associated activities that must be conducted by RSA.

IV. SUMMARY OF PROPOSED MODIFICATIONS

This proposed permit modification adds up to two Phase 2 EDS units and adds the RCMD as a Permittee and the operator of the EDS units. In addition, the proposed modification includes the corrective measures for RSA-204, RSA-227 and MSFC-027. SWMUs RSA-045, RSA-225, RSA-233, RSA-252 and MSFC-033A were moved from the table indicating that investigations are required to the table indicating corrective measures must be developed. The investigation at SWMU RSA-287 has been deemed complete. At RSA-035, the corrective measures have been completed. These SWMUs were moved to the table indicating that no further action is needed at this time.

V. CHANGES TO THE EXISTING PERMIT

The specific changes to the permit are explained below.

Section	**Reason**
Introductory Materials	Added U.S. Army Recovered Chemical Materiel Directorate (RCMD) as Permittee. Added up to two EDS units. Added Permit Modification #10. Added September 15, 2016 and November 21, 2016 for permit application changes.
Part I, pages 1 and 11 Part I, page 4	Added EDS units Removed redundant phrase, “and the OB and OD units under Part IV”
Part II, pages 1 and 2	Added EDS units
Part III	Changed number of pages and page numbers. Added EDS units Added Table III.2
Part VI	Added RSA-035 to Table VI.3. Moved RSA-287 from Table VI.2 to Table VI.3. Moved RSA-045, RSA-225, RSA-233, RSA-252, RSA-294, RSA-306 and MSFC-033A from Table VI.2 to Table VI.6. Removed RSA-204 and MSFC-027 from Table VI.6. Updated potentially affected media on Table VI.6 for RSA-227.

Section	Reason
Part VII	Changed number of pages and page numbering. Added information for monitoring at RSA-204. Added location and depth information for wells RS1996 and RS1997. Added well information for RSA-204 to Table VII.1.
Part VIII	Added area specific conditions for RSA-204, RSA-227 and MSFC-027. Changed paragraph numbering. Removed CMI Work Plan for RSA-035 from Table VIII.1. Added CMI Plan for RSA-204, RSA-227 and MSFC-027 to Table VIII.1.

VI. TECHNICAL CONTACT

Jeanne M. Barnes
Governmental Hazardous Waste Branch, Land Division
Alabama Department of Environmental Management
1400 Coliseum Blvd (zip 36110-2059)
P.O. Box 301463 (zip 36130-1463)
Montgomery, Alabama
Phone: (334) 271-7752
Fax: (334) 271-7752
Email: jmbarnes@adem.alabama.gov

HAZARDOUS WASTE FACILITY PERMIT

PERMITTEE:	U.S. Army, Garrison Redstone U.S. Army Aviation and Missile Research Development and Engineering Center (AMRDEC) U.S. Army Recovered Chemical Materiel Directorate (RCMD)
ADDRESS:	Huntsville, Madison County
PERMIT NUMBER:	AL7 210 020 742
UNITS PERMITTED:	33 Hazardous Waste Storage Units 2 Thermal Treatment Units (Subpart X OB Unit and Subpart X OD Unit) Up to 2 Container Treatment Units (Phase 2 Explosive Destruction System (EDS) Units) Solid Waste Management Unit (SWMU) Corrective Action
ISSUANCE DATE:	September 30, 2010 Modification #1: October 3, 2012 – Minor Modification #2: April 19, 2013 – Major Modification #3: November 26, 2013 – Major Modification #4: February 26, 2014 – Minor Modification #5: May 15, 2015 – Major Modification #6: July 6, 2015 – Minor Modification #7: May 5, 2016 – Major Modification #8: June 3, 2016 – Minor Modification #9: September 29, 2016 – Major Modification #10: XX xx, 2017 – Major
EXPIRATION DATE:	September 29, 2020

This Permit is issued pursuant with the Code of Alabama 1975, §§ 22-30-1-et. seq., as amended, and regulations adopted thereunder and the Hazardous Wastes Management and Minimization Act and in accordance with the plans and specifications and applications filed with the Department subject to the conditions appended hereto, all of which are considered a part of this Permit. This Permit shall be subject to all applicable laws of the State of Alabama, rules and regulations and orders of the Department of Environmental Management and shall be effective from the date of issuance.

_____

Alabama Department of Environmental Management

Draft

ALABAMA DEPARTMENT OF ENVIRONMENTAL MANAGEMENT
HAZARDOUS WASTE PERMIT

Permittee: U.S. Army, Garrison Redstone (IMSE-RED-PWE)
U.S. Army Aviation and Missile Research Development and Engineering Center (AMRDEC)
U.S. Army Recovered Chemical Materiel Directorate (RCMD)

Permit No.: AL7 210 020 742
Identification No.: AL7 210 020 742

Permit Modification: #10

Pursuant to the Alabama Hazardous Wastes Management and Minimization Act (AHWMMA), Code of Ala. 1975, Section 22-30-1, et. seq., as amended, and attendant regulations promulgated thereunder by the Alabama Department of Environmental Management (ADEM or the Department), a permit is issued to U.S. Army Garrison – Redstone (Facility Owner, Facility Co-Permittee, Facility Operator), the U.S. Army Aviation and Missile Research Development and Engineering Center (AMRDEC) (Facility Co-Permittee, Facility Co-Operator (OB/OD Units)) and the U.S. Army Recovered Chemical Materiel Directorate (RCMD) (Facility Co-Permittee, Facility Co-Operator (EDS Units)) to operate a hazardous waste treatment and storage facility located in Madison County, Alabama, at latitude N34^0 37' 00" and longitude W86^0 39' 00".

For purpose of clarification, the designations Facility Owner, Facility Co-Permittee, Facility Operator, and Facility Co-Operator hereinafter shall be referred to as Owner, Permittee, and Operator respectively. The use of referring to Co-Permittee as Permittee and Co-Operator as Operator shall not change legal obligations and/or responsibilities.

To ensure the proper execution of this Permit, the Permittee agrees to the following division of operation responsibility:

- The U.S. Army Garrison – Redstone, as Facility Owner, a Permittee and Operator, acknowledges its responsibility for hazardous waste management activities at the RSA Facility. These responsibilities include funding, policy, capital expenditures, design, programmatic and scheduling decisions, general oversight of contractor activities, interim or corrective actions, and closure or post-closure activities.
- The U.S. Army Aviation and Missile Research Development and Engineering Center (AMRDEC), as Permittee and Operator, acknowledges its responsibility for hazardous waste management activities under the control of AMRDEC. These responsibilities include funding, policy, capital expenditures, design, programmatic and scheduling decisions, general oversight of contractor activities, interim or corrective actions and closure or post-closure activities. The areas under AMRDEC control include the energetic treatment of waste munitions by open burning and open detonation and the associated storage of waste within permitted igloos for these operations.
- The U.S. Army Recovered Chemical Materiel Directorate (RCMD), as Permittee and Operator, acknowledges its responsibility for hazardous waste management activities under the control of RCMD. The areas under RCMD control include the treatment of recovered munitions or other items that contain chemical agent or industrial chemical fills in the EDS units. RCMD also controls the storage of wastes associated with the EDS treatment at the permitted igloos. The

Draft

RCMD responsibilities include the operation of EDS units and personnel training for the safe operation of the EDS units, hazardous waste management, contingency plan implementation and emergency procedures. The training responsibility includes new procedures and refreshers as well as training new personnel. The RCMD will maintain training records in accordance with ADEM Admin. Code r. 335-14-5-.02(7)d.

The hazardous waste treatment and storage facility consists of a hazardous waste storage area, a Subpart X Open Burning (OB) treatment unit, a Subpart X Open Detonation (OD) treatment unit, and up to two Phase 2 explosive destruction system (EDS) units, as well as multiple solid waste management units (SWMUs) and areas of concern (AOCs).

The hazardous waste storage area consists of 33 container storage igloos. The maximum storage capacity of each hazardous waste storage igloo is 240 fifty-five gallon containers (13,200 gallons) and the maximum storage capacity of all 33 units is not to exceed 7920 fifty-five gallon drums or 435,600 total gallons. Two of the storage units are used by Defense Logistics Agency (DLA) Disposition Services - Huntsville and are identified as Buildings 8630 and 8631. The remaining 31 units (Buildings 8205, 8208, 8209, 8210, 8211,8212, 8213, 8214, 8216, 8217, 8218, 8219, 8220, 8221, 8222, 8223, 8224, 8225, 8226, 8227, 8228, 8229, 8230, 8231, 8621, 8622, 8623, 8624, 8625, 8632, and 8633) are managed by the Environmental Management Division (EMD) of U.S. Army Garrison - Redstone.

The OB and OD units are used to burn and detonate hazardous energetic waste having the characteristic of reactivity. The open burning area consists of five metal burn pans that are each 9 by 20 feet, elevated on support steel and placed on top of concrete pads. The open detonation takes place in an area inside the designated OB and OD Units. The OD area is surrounded on three sides by earthen mounds and each detonation is completed in a newly excavated pit.

The EDS units are used to process recovered munitions or other items that contain chemical agent or industrial chemical fills. Items to be treated may or may not have an explosive component. The EDS units are operated in environmental enclosures.

The facility also includes current and former solid waste management units (SWMUs). This permit sets forth SWMU corrective action requirements and associated activities that must be concluded by the Permittee.

The Permittee must comply with all terms and conditions of this permit, which consists of the conditions set forth herein (including those in any attachments), and the regulations applicable to the Permittee's facility contained in Chapters 335-14-1, 335-14-2, 335-14-5, 335-14-8, and 335-14-9 of the ADEM Administrative Code of Regulations (hereinafter referred to as the "ADEM Admin. Code Rule" or "ADEM Admin. Code R."). Applicable regulations are those which are in effect on the date of issuance of this permit.

This permit is based on the assumption that the information submitted in the permit application attached to the Permittee's letter dated October 15, 2007 as modified by subsequent amendments dated August 14, 2008, September 4, 2008, July 31, 2009, December 1, 2011, December 13, 2012, December 19, 2013, November 5, 2014, July 15, 2015, December 23, 2015, January 7, 2016, May 18, 2016 and May 23, 2016, September 15, 2016and November 21, 2016 (hereby incorporated by reference and hereafter referred to as the Application) is accurate and that the facility will be constructed and operated as specified in the Application. Any inaccuracies found in this information could lead to the termination or modification of this permit in accordance with ADEM Admin. Code Rules 335-14-8-.04(2), 335-14-8-.04(3), and 335-14-8-.04(4) and could lead to potential enforcement action. The Permittee must inform ADEM of any

Draft

deviation from or changes in the information provided in the Application that would affect the Permittee's ability to comply with the applicable regulations or permit conditions.

This permit is effective as of September 30, 2010, as amended October 3, 2012, April 19, 2013, November 26, 2013, February 26, 2014, May 15, 2015, July 6, 2015, May 5, 2016, June 3, 2016, September 29, 2016 and XX xx, 2017 and shall remain in effect until September 29, 2020 unless revoked and reissued, or terminated under ADEM Admin. Code Rules 335-14-8-.04(2) and 335-14-8-.04(4) or continued in accordance with ADEM Admin. Code Rule 335-14-8-.05(2).

Alabama Department of Environmental Management	Date Signed

Draft

TABLE OF CONTENTS

PART	TITLE	TOTAL PAGES
I	Standard Facility Conditions	13
II	General Facility Conditions	8
III	Management in Containers	10
IV	Thermal Treatment	6
V	Operational Range Management	3
VI	Solid Waste Management Unit Identification and Evaluation	35
VII	Groundwater Monitoring and Corrective Action	29
VIII	Corrective Measures Implementation	22

APPENDICES

A	Waste Minimization Objectives	2

Documents Incorporated By Reference:

Part A and Part B Permit Application submitted on October 15, 2007, as modified by subsequent amendments dated August 8, 2008, September 4, 2008, July 31, 2009, December 1, 2011, December 13, 2012, December 19, 2013, November 5, 2014, July 15, 2015, December 23, 2015 (Part A), January 7, 2016 (Part B), May 18, 2016, May 23, 2016 September 15, 2016 and November 21, 2016.
Record of Decision (ROD) for Surface Media at RSA-011 (September 5, 2007)
Final ROD for Surface Media at RSA-057 (September 10, 2007)
Final Remedial Action Work Plan for RSA-057 (March 31, 2008)
Final ROD for Surface Media at MSFC-002/087 (June 20, 2008)
Land Use Control Remedial Design (LUC RD) for RSA-049 (July 2, 2009)
Installation-Wide Groundwater LUC RD (August 18, 2009)
Final ROD for Surface Media at RSA-094 (September 3, 2009)
Final ROD for Surface Media at RSA-196/098 (September 11, 2009)
Revision 4, Remedial Action Phase 1 Completion Report for RSA-057 (August 7, 2012)
CMI Plan for Surface Media and Groundwater at RSA-053 (September 10, 2012)
Corrective Measures Implementation (CMI) Work Plan (WP) for Surface Media at RSA-096, (June 7, 2012 reissued on December 7, 2012)
Revision 2 CMI Work Plan, RSA-054/RSA-055 (December 10, 2012)
CMI Plan, RSA-035 (August 1, 2013)
Revision 2 CMI Work Plan, RSA-087 and RSA-088 (August 5, 2013)
Revision 2 CMI Work Plan, RSA-200 (August 5, 2013)
Revision 1 CMI Work Plan, RSA-095 and RSA-142 (September 6, 2013, Revised May 18, 2016)
Installation-Wide Groundwater Monitoring Plan (Revised June 23, 2014)
Revision 2 CMI Work Plan, RSA-058 (November 14, 2014)
CMI Work Plan, RSA-005 (March 12, 2015)
CMI Work Plan, RSA-250 (July 20, 2016)
Revision 1 CMI Work Plan, RSA-060 (July 25, 2016)
Revision 1 CMI Work Plan, RSA-194, RSA-198 and RSA-199 (May 18, 2016)
CMI Work Plan, RSA-227 (March 24, 2016)
Revision 2 CMI Work Plan, RSA-204 (September 23, 2016)
CMI Work Plan for MSFC-027 (April 26, 2016)

Draft

Redstone Arsenal Installation Restoration Site Access Control Program (Redstone Regulation 200-7), as enacted May 27, 2003 and revised September 19, 2012.

Alabama Department of Environmental Management (ADEM) Memorandum #304 – Subject: Compliance with Land Use Control Requirements for Federally – Owned Property, as enacted September 3, 2010. (Note: Mention of Policy Memo 304 is for reference purposes only as the contents of this memo have been subsequently incorporated into and superceded by ADEM Admin. Code r. 335-5-1-.02(3).)

Draft

PART I

STANDARD FACILITY CONDITIONS

I.A. EFFECT OF PERMIT

The Permittee is allowed to store hazardous waste in designated storage units; and perform hazardous waste treatment, specifically EDS, OB and OD actions, in designated treatment units. The above mentioned actions must be conducted in accordance with the conditions of the permit. The Permittee is also required to perform investigation and/or corrective action at the solid waste management units (SWMUs) identified herein.

Issuance of this permit does not authorize any injury to persons or property, any invasion of other private rights, or any infringement of state or local law or regulations. Compliance with the terms of this permit does not constitute a defense to any action brought under the AHWMMA, or any other law governing protection of public health or the environment, for any imminent and substantial endangerment to human health, welfare, or the environment. (ADEM Admin. Code R. 335-14-8-.01(4)).

I.B. SEVERABILITY

The provisions of this permit are severable and if any provision of this permit, or the application of any provision of this permit to any circumstance, is held invalid, the application of such provision to other circumstances and the remainder of this permit shall not be affected thereby.

I.C. DUTIES AND REQUIREMENTS

1. Duty to Comply

The Permittee shall comply with all conditions of this permit, except to the extent and for the duration such noncompliance is authorized by an emergency permit. The Permittee shall comply with document submittal dates and schedules of compliance established or approved by the Department for activities required by this permit. Any permit noncompliance, other than noncompliance authorized by an emergency permit, constitutes a violation of the AHWMMA, and is grounds for enforcement action, permit termination, revocation and reissuance, modification, or denial of a permit renewal application.

2. Duty to Reapply

a. Operating Units

If the Permittee wishes to continue an activity regulated by this permit after the expiration date of this permit, the Permittee must apply for and obtain a new permit. The application for a new permit must be submitted at least 180 days before the expiration of this permit, as required by ADEM Admin. Code R. 335-14-8-.03(1)(b)2.

Draft

b. SWMU Corrective Action Requirements

The Permittee must submit an application for a new permit for both post-closure and Solid Waste Management Unit (SWMU) corrective action at least 180 calendar days before the expiration of this permit. The Permittee must reapply in order to fulfill the 30-year post-closure care period required by ADEM Admin. Code Rule 335-14-5-.07(8)(a)1. The Department may shorten or extend the post-closure care period applicable to the hazardous waste facility in accordance with ADEM Admin. Code Rules 335-14-5-.07(8)(a)2. and 335-14-8-.03(1)(b).

3. Need to Halt or Reduce Activity Not a Defense

It shall not be a defense for the Permittee in an enforcement action that it would have been necessary to halt or reduce the permitted activity in order to maintain compliance with the conditions of this permit.

4. Duty to Mitigate

In the event of noncompliance with this permit, the Permittee shall take all reasonable steps to minimize releases to the environment, and shall carry out such measures as are reasonable to prevent significant adverse impacts on human health or the environment.

5. Proper Operation and Maintenance

The Permittee shall, at all times, properly operate and maintain all facilities and systems of storage, monitoring, and control (and related appurtenances) which are installed or used by the Permittee to achieve compliance with the conditions of this permit. Proper operation and maintenance (O&M) includes effective performance, adequate funding, adequate operator staffing and training, and adequate laboratory and process controls, including appropriate quality assurance procedures. This provision requires the operation of backup or auxiliary facilities or similar systems only when necessary to achieve compliance with the conditions of this permit.

6. Permit Actions

This permit may be modified, revoked and reissued, or terminated for cause as specified in ADEM Admin. Code Rules 335-14-8-.04(2), (3) and (4). The filing of a request for a permit modification, revocation and reissuance, or termination, or the notification of planned changes or anticipated noncompliance on the part of the Permittee does not stay the applicability or enforceability of any permit condition.

7. Property Rights

Issuance of this permit does not convey any property rights of any sort, nor any exclusive privilege.

8. Duty to Provide Information

The Permittee shall furnish to the Department, within a reasonable time as determined by the Department, any relevant information which the Department may request to determine whether cause exists for modifying, revoking and reissuing, or terminating this

Draft

permit, or to determine compliance with this permit. The Permittee shall also furnish to the Department, upon request, copies of records required to be kept by this permit.

9. Inspection and Entry

The Permittee shall allow duly designated officers and employees of the Department or their authorized representative, upon the presentation of credentials and other documents as may be required by law, to:

a. Enter at reasonable times upon the Permittee's premises where a regulated facility or activity is located or conducted, or where records must be kept under the conditions of this permit;

b. Have access to and copy, at reasonable times, any records that must be kept under the conditions of this permit;

c. Inspect at reasonable times any facilities, equipment (including monitoring and control equipment), practices, or operations regulated or required under this permit; and,

d. Sample or monitor, at reasonable times, for the purposes of assuring permit compliance or as otherwise authorized by the AHWMMA, any substances or parameters at any location. The Permittee shall have the opportunity to split samples during sampling.

10. Monitoring and Records

a. Samples and measurements taken for the purpose of monitoring shall be representative of the monitored activity. The method used to obtain a representative sample of the waste to be analyzed must be the appropriate method from ADEM Admin. Code Rule 335-14-2-Appendix I or the methods specified in the Waste Analysis Plan, Section C-2 and Section II.B, of the permit renewal application. Laboratory methods must be those specified in Test Methods for Evaluating Solid Waste: Physical/Chemical Methods SW-846 (latest edition), Methods for Chemical Analysis of Water and Wastes (EPA-600/4-79-020), Standard Methods for the Examination of Water and Wastewater (latest edition), the methods specified in the Waste Analysis Plan, Section II.B, of the permit application, or an alternative method approved by ADEM. [ADEM Admin. Code Rule 335-14-8-.03(1)(j)1.]

b. The Permittee shall maintain at the facility records of all monitoring information including all calibration and maintenance records, all original strip chart recordings for continuous monitoring instrumentation, the certification required by 335-14-5-.05(4)(b)9, records of all data used to prepare documents required by this permit, copies of all reports required by this permit, and records of all data used to complete the application for this permit, for a period of at least three (3) years from the date of the certification, application, sample, measurement, report or record, or until corrective action is completed, whichever date is later. This period may be extended by the Department at any time and is automatically extended during the course of any unresolved enforcement action regarding this

Draft

facility. [ADEM Admin. Code Rules 335-14-5-.05(5)(b) and 335-14-8-.03(1)(j)2.]

c. The Permittee shall maintain at the facility records of all groundwater monitoring wells, piezometers and associated groundwater surface elevations throughout the term of this Permit. These records shall include the surveyed location, surveyed elevation, surveyed elevation reference point, total depth, screened interval, construction details, well log, and all other pertinent information for each well and piezometer.

d. Records for monitoring information shall include:

i. The date(s), exact place, and times of sampling or measurements;

ii. The names of individual(s) who performed the sampling or measurements;

iii. The date(s) analyses were performed;

iv. The names of individual(s) who performed the analyses;

v. The analytical techniques or methods used; and,

vi. The results of such analyses.

e. The following documents and information shall be maintained throughout the term of this Permit at the facility:

i. Complete copy of this permit and the permit application.

ii. Operating record as required by ADEM Admin. Code Rule 335-14-5-.05(4) and this permit.

iii. Copies of all plans, reports, inspection schedules, inspection logs as required by ADEM Admin. Code Rule 335-14-5 and this permit.

11. Signatory Requirements

All applications, reports or information required by this permit and submitted to the Department shall be signed and certified in accordance with ADEM Admin. Code Rules 335-14-8-.02(2) and 335-14-8-.03(1)(k).

12. Reporting Requirements

a. Planned Changes

The Permittee shall give notice to the Department as soon as possible of any planned physical alterations or additions to the permitted facility and any solid waste management units identified under Part VI of this permit.

Draft

b. Anticipated Noncompliance

The Permittee shall give advance notice to the Department of any planned changes in the permitted facility or activity that may result in noncompliance with permit requirements.

c. Transfer of Permits

This permit may be transferred to a new owner or operator only if it is modified or revoked and reissued pursuant to ADEM Admin. Code Rule 335-14-8-.04(1) or 335-14-8-.04(3)(a)1.(vii). Before transferring ownership or operation of the facility during the term of this Permit, the Permittee shall notify the new owner or operator, in writing, of the requirements of ADEM Admin. Code Rules 335-14-5 and 335-14-8 and this permit.

d. Monitoring Reports

Monitoring results shall be reported at the intervals specified elsewhere in this permit.

e. Compliance Schedules

Reports of compliance or noncompliance with, or any progress reports on, interim and final requirements contained in any compliance schedule of this permit shall be submitted to the Department no later than 14 calendar days following each schedule date.

f. Twenty-Four Hour Reporting

i. The Permittee shall report to the Department any noncompliance with this permit that may endanger human health or the environment. Any such information shall be reported orally within 24 hours from the time the Permittee becomes aware of the circumstances. This report shall include, but is not limited to, the following:

(I) Information concerning the release of any hazardous waste which may endanger public drinking water supplies; and,

(II) Information concerning the release or discharge of any hazardous waste, or hazardous waste constituents, or of a fire or explosion at the facility, which could threaten the environment or human health outside the facility.

ii. The description of the occurrence and its cause shall include:

(I) Name, address, and telephone number of the owner or operator;

(II) Name, address, telephone number, and EPA Identification Number of the facility;

(III) Date, time, and type of incident;

Draft

(IV) Name and quantity of material(s) involved;

(V) The extent of injuries, if any;

(VI) An assessment of actual or potential hazards to the environment and human health outside the facility, where this is applicable; and,

(VII) Estimated quantity and disposition of recovered material that resulted from the accident.

iii. A written submission shall also be provided within 5 calendar days of the time that the Permittee becomes aware of the circumstances. The written submission shall contain a description of the noncompliance and its cause; the periods of noncompliance (including exact dates and times); whether the noncompliance has been corrected, and if not, the anticipated time it is expected to continue; and steps taken or planned to reduce, eliminate, and prevent recurrence of the noncompliance.

g. Other Noncompliance

The Permittee shall report to the Department all instances of noncompliance not otherwise required by Permit Conditions I.C.12.d., I.C.12.e., or I.C.12.f. at the time any other reports required by this permit are submitted. The reports shall contain the information required by Permit Condition I.C.12.f..

h. Other Information

When the Permittee becomes aware that it failed to submit any relevant facts in a permit application, or submitted incorrect information in a permit application or in any report to the Department, it shall promptly submit such facts or information. In addition, upon request, the Permittee shall furnish to the Department any information related to compliance with this permit.

13. Obligation for Corrective Action

Owners and operators of hazardous waste management units must have permits during the active life (including the closure and post-closure period) of the unit, and for any period necessary to comply with the SWMU corrective action requirements (Part VI) of this permit. Therefore, the Permittee must reapply in accordance with Condition I.C.2. of this permit until this obligation is fulfilled.

14. Certification of Construction

The Permittee may not commence treatment, storage or disposal of hazardous waste or contaminated media at any new or modified portion of the facility until the Permittee has submitted to the Department, by certified mail or hand-delivery, a letter (together with the certification by the Construction Quality Assurance (CQA) officer required by ADEM Admin. Code Rule 335-14-5-.02(10)(d) and any other certifications required by this permit or ADEM Admin. Code Rule 335-14) signed by the Permittee and a

Draft

registered Professional Engineer (State of Alabama) stating that the facility has been constructed or modified in compliance with this permit where appropriate; and,

a. The Department has inspected the modified or newly constructed facility and finds it is in compliance with the conditions of this permit; or

b. The Department has either waived the inspection or has not notified the Permittee, within 15 calendar days of the notification from the Permittee, of its intent to inspect. [ADEM Admin. Code Rule 335-14-8-.03(1)(1)2.]

15. The Permittee shall assure that all measures necessary to maintain and/or achieve compliance with all applicable requirements of ADEM Admin. Code Rules 335-14 are taken during the active life of the facility, post-closure care period, corrective action period, and throughout the term of this permit.

16. In the event that circumstances beyond the Permittee's control arise to prevent achievement of any deadline set forth by this permit, the Permittee may immediately, upon the occurrence thereof, request an extension by sending a written request to the Department explaining the need for the extension. The Department may, after consideration of the circumstances, grant the extension. Requests for extensions may require a permit modification pursuant to ADEM Admin. Code Rule 335-14-8-.04(2) or (3).

I.D. CONFIDENTIAL INFORMATION

The Permittee may claim confidential any information required to be submitted by this permit if the information is protectable under Code of Alabama 1975, §22-30-18, as amended. The term "trade secret" as used in §22-30-18 is defined in Code of Alabama 1975, §22-30-3(12).

I.E. DEFINITIONS

For the purposes of this permit, terms used herein shall have the same meaning as those in ADEM Admin. Code Rules 335-14-1, 335-14-2, 335-14-5, and 335-14-8, unless this permit specifically provides otherwise. Where terms are not defined in the regulations or this permit, a standard dictionary reference or the generally accepted scientific or industrial meaning of the term shall define the meaning associated with such terms.

"Action levels" for the purposes of this permit are health-based concentrations of hazardous constituents determined to be indicators for the protection of human health and/or the environment.

An "Alternate concentration limit" (ACL) for the purposes of this permit refers to a groundwater concentration limit which is established pursuant to ADEM Admin. Code R. 335-14-5-.06(5)(b).

"Area of concern" (AOC), for the purposes of this permit, includes any area having a probable release of a hazardous waste or hazardous constituent which is not from a solid waste management unit and is determined by the Department to pose a current or potential threat to human health or the environment. Such areas of concern may require investigations and remedial action as required under Section 3005(c)(3) of the Resource Conservation and Recovery Act and

Draft

ADEM Admin. Code Rule 335-14-8-.03(3)(b)2. in order to ensure adequate protection of human health and the environment.

"Contamination," for the purposes of this permit, refers to the presence of any hazardous constituent in a concentration that exceeds the naturally occurring concentration of that constituent in the immediate vicinity of the facility (i.e., areas not affected by the facility).

“Corrective action" for the purposes of this permit is the sum of all corrective measures, and may include all corrective measures necessary to protect human health and the environment for all releases of hazardous waste or hazardous constituents from any solid waste management unit at the facility, regardless of the time at which waste was placed in the unit, as required by ADEM Admin. Code R. 335-14-5-.06(11) and/or 335-14-5-.06(12). Corrective measures may address releases to air, soils, surface water, or groundwater.

“Corrective Action Management Unit” (CAMU) for the purposes of this permit, includes any area within a facility that is designated by the Department under ADEM Admin. Code 335-14-5-.19 for the purpose of implementing corrective action requirements under ADEM Admin Code Rule 335-14-5-.06(12), 22-30-19 et seq., Code of Alabama 1975, and/or RCRA section 3008(h). A CAMU shall only be used for the management of remediation waste pursuant to implementing such corrective actions requirements at the facility.

"Corrective measures" for the purposes of this permit, include all individual measures taken and/or necessary to remedy releases and to protect human health and the environment for all releases of hazardous waste or hazardous constituents from any solid waste management unit at the facility, regardless of the time at which waste was placed in the unit, as required under ADEM Admin. Code R. 335-14-5-.06(12). Corrective measures may address releases to air, soils, surface water, or groundwater. The sum of all individual corrective measures is known as corrective action.

"Extent of contamination," for the purposes of this permit, is defined as the horizontal and vertical areas in which the concentrations of hazardous constituents in the environmental media being investigated are above detection limits or background concentrations indicative of the region, whichever is appropriate as determined by the Department.

"Hazardous constituents," for the purposes of this permit, are those substances listed in ADEM Admin. Code Rule 335-14-2-Appendix VIII and/or ADEM Admin. Code Rule 335-14-5-Appendix IX and include hazardous constituents released from solid waste, hazardous waste, and hazardous waste constituents that are reaction by-products.

"Interim measures" for the purposes of this permit are actions necessary to minimize or prevent the further migration of contaminants and limit actual or potential human and environmental exposure to contaminants while long term corrective action remedies are evaluated and, if necessary, implemented.

“Land Disposal” for the purposes of this permit and ADEM Admin. Code R. 335-14-9 means placement in or on the land and includes, but is not limited to, placement in a landfill, surface impoundment, waste pile, injection well, land treatment facility, salt dome formation, underground mine or cave, or concrete vault or bunker intended for disposal purposes.

"Landfill" for the purposes of this permit, includes any disposal facility or part of a facility where hazardous waste is placed in or on the land and which is not a pile, a land treatment facility, a

Draft

surface impoundment, an underground injection well, a salt dome formation, a salt bed formation, an underground mine, a cave, or a corrective action management unit.

"Land Use Controls," for the purposes of this permit, is as defined by ADEM Admin. Code Rule 335-15-1-.02.

A "maximum concentration limit" (MCL) for the purposes of this permit refers to a groundwater concentration limit listed in Table 1 of ADEM Admin. Code R. 335-14-5-.06(5), or which is listed in ADEM Admin. Code R. 335-7-2 (Primary Drinking Water Standards) or ADEM Admin. Code R. 335-7-3 (Secondary Drinking Water Standards) or analogous Federal safe drinking water regulations (40 CFR 141). In cases where a constituent is listed in multiple sources (ADEM Admin. Code R. 335-14 and/or ADEM Admin. Code R. 335-7, and/or 40 CFR 141), the most stringent standard shall apply.

"Method detection limit" (MDL), for the purposes of this permit, means the minimum concentration of a substance that can be measured and reported with 99% confidence that the analyte concentration is greater than zero and is determined from analysis of a sample in a given matrix type containing the analyte.

"Mixed waste," for the purposes of this permit, means a solid waste that is a mixture of hazardous waste (as defined in ADEM Admin. Code Rule 335-14-2-.01(3)) and radioactive waste (as defined in 10 CFR 61.2). The radioactive component of mixed waste is subject to regulation by the Atomic Energy Act (AEA)/Nuclear Regulatory Commission (NRC). The non-radioactive chemically hazardous component of mixed waste is subject to regulation by the AHWMMA and ADEM Admin. Code Rule 335-14.

"Miscellaneous unit" means a hazardous waste management unit where hazardous waste is treated, stored, or disposed of and that is not a container, tank, surface impoundment, pile, land treatment unit, landfill, incinerator, boiler, industrial furnace, underground injection well with appropriate technical standards under 40 CFR Part 146, containment building, corrective action management unit, unit eligible for a research, development and demonstration permit under 335-14-8-.06(4); or staging pile.

"Munitions Debris" for the purposes of this permit means remnants of munitions (e.g., fragments, penetrators, projectiles, shell casings, links, fins) remaining after munitions use, demilitarization, or disposal.

"Non-regulated waste" for the purposes of this permit means waste that is not otherwise regulated as RCRA listed and/or characteristic hazardous waste. In this case, non-regulated includes, but is not limited to, solid and universal waste, used oil, PCB, etc. Universal waste and used oil are subject to ADEM Admin. Code 335-14-11, Standards for Universal Waste Management and ADEM 335-14-17, Standards for the Management of Used Oil, respectively.

"Open burning" means the combustion of any material without the control of combustion air to maintain adequate temperature for efficient combustion, containment of the combustion-reaction in an enclosed device to provide sufficient residence time and mixing for complete combustion, and control of emission of the gaseous combustion products.

"Open detonation" means the explosion in which chemical transformation passes through the material faster than the speed of sound (0.33 kilometers/second at sea level) and which produces the uncontrolled emission of the gaseous detonation products.

Draft

“Operating day,” for the purposes of this permit, means any day on which hazardous waste is treated, stored, or disposed of in a unit. For example, each day that a hazardous waste storage unit contains hazardous waste is an operating day; as is each day that a disposal unit contains or receives hazardous waste, or each day that hazardous waste is treated in a treatment unit.

“Operational range” for the purpose of this permit, as defined in Section 101(e) of the United States Code means a range that is under the jurisdiction, custody, or control of the Secretary of a military department and (a) that is used for range activities, or (b) although not currently being used for range activities, that is still considered by the Secretary to be a range and has not been put to a new use that is incompatible with range activities.

“Practical quantitation limits” (PQL) for the purposes of this permit, are the lowest concentrations of analytes in groundwater that can be reliably determined within specified limits of precision and accuracy by a given method under routine laboratory operating conditions, as listed in ADEM Admin. Code R. 335-14-5-Appendix IX.

"Release," for the purposes of this permit, includes any spilling, leaking, pouring, emitting, emptying, discharging, injecting, escaping, leaching, pumping, or disposing into the environment of any hazardous waste or hazardous constituent.

"Remediation waste" for the purposes of this permit includes all solid and hazardous wastes, and all media (including groundwater, surface water, soils, and sediments) and debris, which contain listed hazardous wastes or which themselves exhibit a hazardous waste characteristic, that are managed for the purpose of implementing corrective action requirements under ADEM Admin. Code R. 335-14-5-.06(12) and RCRA Section 3008(h). For a given facility, remediation wastes may originate only from within the facility boundary, but may include waste managed in implementing RCRA Sections 3004(v) or 3008(h) for releases beyond the facility boundary.

"Solid waste" for the purposes of this permit means any garbage, refuse, sludge from a waste treatment plant, water supply treatment plant, or air pollution control facility and other discarded materials, including solid, liquid, semisolid, or contained gaseous materials resulting from industrial, commercial, mining, and agricultural operations, and from community activities, but does not include solid or dissolved material in domestic sewage, or solid or dissolved materials in irrigation return flows or industrial discharges which are point sources subject to permits under Section 402 of the Federal Water Pollution Control Act, as amended (86 Stat. 880), or source, special nuclear, or by-product material as defined by the Atomic Energy Act of 1954, as amended (68 Stat. 923).

"Solid waste management unit" (SWMU), for the purposes of this permit, includes any unit that has been used for the treatment, storage or disposal of solid waste at any time, irrespective of whether the unit is or ever was intended for the management of solid waste. RCRA-regulated hazardous waste management units are also solid waste management units. SWMUs include areas that have been contaminated by routine and systematic releases of hazardous waste or hazardous constituents, excluding one-time accidental spills that are immediately remediated and cannot be linked to solid waste management activities (e.g., product or process spills).

“Storm event,” for the purposes of this permit, is defined as a 1-year, 24-hour storm event or rainfall that measures 1-inch or greater in 1 hour or less. Rainfall measurements may be taken at the site, or the closest official weather monitoring station may be used.

Draft

"Temporary Unit" (TU) for the purposes of this permit, includes any temporary tanks and/or container storage areas used solely for treatment or storage of hazardous remediation wastes during specific remediation activities. Designated by the Department, such units must conform to specific standards, and may only be in operation for a period of time as specified in this permit.

“Thermal treatment” for the purpose of this permit, includes open burning and open detonation of hazardous energetics and energetic contaminated waste.

A "unit" for the purposes of this permit includes any contiguous discernable area used for the management of hazardous waste (or non-hazardous waste in the case of a SWMU) and may include, but is not limited to, any landfill, surface impoundment, waste pile, land treatment unit, incinerator, injection well, tank, container storage area, septic tank, drain field, wastewater treatment unit, elementary neutralization unit, transfer station, recycling unit or the EDS, OB and OD units.

I.F. EXPIRATION AND CONTINUATION OF PERMIT

This permit and all conditions herein will remain in effect beyond this permit's expiration date if the Permittee has submitted a new application as required by Permit Condition I.C.2. and, through no fault of the Permittee, the Department has not issued a new permit (ADEM Admin. Code R. 335-14-8-.05(1) and 335-14-8.05(2)).

I.G. WASTE MINIMIZATION

1. Certification Requirements

   Pursuant to ADEM Admin. Code Rule 335-14-5-.05(4)(b)9, the Permittee must certify, no less often than annually, that:

   a. The Permittee has a program in place to reduce the volume and toxicity of hazardous waste to the degree determined by the Permittee to be economically practicable; and,

   b. The proposed method of treatment, storage, or disposal is the most practicable method available to the Permittee and that it minimizes the present and future threat to human health and the environment.

2. Recording Requirements

   a. The Permittee shall maintain copies of this certification in the facility operating record as required by ADEM Admin. Code R. 335-14-5-.05(4)(b)9.

   b. The Waste Minimization Program required under I.G.1.a. and I.G.1.b. above should at a minimum address the following topics:

      i. Identity of each hazardous waste stream and the source of generation.

      ii. Types and amounts of hazardous waste that is generated at the facility.

Draft

iii. Present and proposed method of treatment, storage or disposal that is available to the Permittee.

iv. Description of techniques implemented in the past for hazardous waste reduction and their effectiveness.

v. An evaluation of technically and economically feasible hazardous waste reduction techniques.

vi. A program and schedule for implementing the selected hazardous waste reduction technique.

3. Solid Waste Minimization Objectives

a. If Condition I.G. of this permit is applicable, then the Waste Minimization program required under Condition I.G. above should address the objectives listed in Appendix A of this permit

I.H. COST ESTIMATES

1. The Permittee shall maintain detailed written cost estimates, in current dollars, at the location specified in Permit Condition I.C.10.e. and on file with ADEM in accordance with ADEM Admin. Code Rules 335-14-5-.08(3), (5), and (10).

2. All cost estimates must be updated annually as required by ADEM Admin. Code Rules 335-14-5-.08(3)(b), 335-14-5-.08(5)(b), and 335-14-5-.08(10)(b).

3. The cost estimate shall be maintained and submitted in the form designated by the Department.

4. The Permittee must update the cost estimate no later than 30 calendar days after the Department has approved a modification to the Closure Plan, Post-Closure Plan, or Corrective Action Plan, or any other plan required or referenced by this permit, if the change in the plan results in an increase in the amount of the cost estimate.

I.I. FINANCIAL ASSURANCE (RESERVED)

I.J PERMIT MODIFICATIONS

The Permittee shall request a permit modification whenever changes in operating plans or facility design affect any plan (e.g., closure, groundwater monitoring, post-closure, or corrective action) required or referenced by this permit. The Permittee must submit a written request for a permit modification pursuant to the requirements of ADEM Admin. Code Rule 335-14-8-.04(2) at least 60 calendar days prior to the proposed change in facility design or operation.

Draft

I.K. REPORTS, NOTIFICATIONS, AND SUBMISSIONS TO THE DEPARTMENT

All reports, notifications, or other submissions that are required by this permit should be sent via certified mail, private courier service (which has package tracking/tracing), or hand delivered to:

Chief, Land Division
Alabama Department of Environmental Management
P.O. Box 301463 (Zip 36130-1463)
1400 Coliseum Boulevard (Zip 36110-2059)
Montgomery, Alabama

and

Director, RCRA Division
US EPA Region-4
Atlanta Federal Center
61 Forsyth Street SW
Atlanta Georgia 30303-3104

Draft

PART II

GENERAL FACILITY CONDITIONS

II.A. DESIGN AND OPERATION OF PERMITTED UNITS

The Permittee shall maintain and operate such units to minimize the possibility of a fire, explosion, or any unplanned sudden or non-sudden release of hazardous waste or constituents to air, soil, surface water, or groundwater which could threaten human health or the environment.

Stored hazardous waste may only be released to those who are authorized to handle and/or manage such hazardous waste. EDS, OB and OD operations may only be conducted by those who are authorized to handle the hazardous waste and conduct such operations.

II.B. HAZARDOUS WASTE FROM OFF-SITE SOURCE

The Permittee shall not receive hazardous waste from an off-site source for storage without prior approval of the Department. The Permittee shall only treat hazardous waste by EDS, OB and/or OD that is generated onsite or that is generated at the contiguous Marshall Space Flight Center (EPA ID AL1 800 013 863).

II.C. GENERAL WASTE ANALYSIS

1. The Permittee shall comply with all requirements set forth under ADEM Admin. Code R. 335 14-5-.02(4) and shall follow the procedures described in the Waste Analysis Plans, Section C-2 and Section II.B, of the permit renewal application.

2. The Permittee shall utilize the analytical methods specified in the Waste Analysis Plan, Section C-2 and Section II.B, of the permit renewal application. These laboratory methods will address the wastes listed in Section C-2 and Section II.B, of the permit renewal application. Modification of the Waste Analysis Plan shall require a modification of this permit pursuant to ADEM Admin. Code R. 335-14-8-.04(2).

3. The Permittee shall subject samples from incoming waste shipments to the fingerprint parameters identified in Section II.B and Section C-2 of the permit renewal application.

4. The Permittee shall classify waste as non-conforming when the receiving analysis does not match the information contained in the accompanying manifest, profile, and/or equivalent information described in Section II.B and Section C-2 of the permit renewal application.

5. Before treatment of waste by EDS, OB or OD, the Permittee shall ensure that waste sent for treatment corresponds with the applicable Waste Profile Form, Appendix II.B-A, of the permit renewal application, for that waste. All waste that does not conform to the information contained in the applicable Waste Profile Form shall be classified as non-conforming and returned to the generator.

6. Before storing, treating, or disposing of a hazardous waste, the Permittee shall obtain a detailed chemical and physical analysis of a representative sample of the waste, as described in Section C-2 and Section II.B.2.3 of the permit renewal application.

Draft

II.D. SECURITY

1. The Permittee shall comply with the security provisions set forth under ADEM Admin. Code R. 335-14-5-.02(5) and as described in Section F-1 and Section II.C of the permit renewal application.

2. In order to comply with ADEM Admin. Code R. 335-14-5-.02(5), the hazardous waste storage areas and the EDS, OB and OD areas of the facility shall remain fenced with at least a six-foot high chain link fence. The fence shall be kept in good repair. All entrances to the permitted hazardous waste management areas shall be closed and locked when security and/or operations personnel are not present.

3. The Permittee shall maintain signs along the perimeter fence of the permitted hazardous waste management areas and the EDS, OB and OD areas. The signs shall read "Danger - Unauthorized Personnel Keep Out". At least one sign must be legible from a distance of at least 25 feet from any approach to each area (ADEM Admin. Code R. 335-14-5-.02(5)(c)).

II.E. GENERAL INSPECTION REQUIREMENTS

1. The Permittee shall comply with all requirements of ADEM Admin. Code R. 335-14-5-.02(6), and 335-14-5-.09(5),

2. The Permittee shall follow the inspection procedures and schedules, as described in Section F-2 and Section II.C.2 of the permit renewal application.

3. The Permittee shall remedy any deterioration or malfunction (of equipment or structure(s)) discovered during any inspection as required by ADEM Admin. Code R. 335-14-5-.02(6)(c).

4. Records of inspections shall be maintained at the facility as required by ADEM Admin. Code R. 335-14-5-.02(6).

II.F. PERSONNEL TRAINING

The Permittee shall conduct personnel training as required by ADEM Admin. Code R. 335-14-5-.02(7). This training program shall follow the procedures and outline, described in Section H and Section II.E of the permit renewal application. The Permittee shall maintain training documents and records as required by ADEM Admin. Code R. 335-14-5-.02(7)(d) and (e).

II.G. GENERAL REQUIREMENTS FOR IGNITABLE, REACTIVE, OR INCOMPATIBLE WASTE

1. The Permittee shall comply with all requirements for ignitable, reactive or incompatible wastes set forth under ADEM Admin. Code R. 335-14-5-.02(8).

2. "No Smoking" signs must be conspicuously placed wherever there is a potential hazard from ignitable waste.

Draft

II.H. LOCATION STANDARDS AND UNIT MAINTENANCE

1. The Permittee shall comply with all location standards set forth under ADEM Admin. Code R. 335-14-5-.02(9).

2. If changes are made to the design or operation of a hazardous waste management or treatment unit, these changes must receive approval by the Department before they are implemented, and may require permit modification pursuant to ADEM Admin. Code R. 335-14-8-.04(2).

II.I. PREPAREDNESS AND PREVENTION

1. Required Equipment

   The Permittee shall comply with ADEM Admin. Code R. 335-14-5-.03(3) and at a minimum, shall equip the facility with the equipment set forth in the Contingency Plan, Section G and Section II.D of the permit renewal application.

2. Testing and Maintenance of Equipment

   The Permittee shall test and maintain the equipment specified in the Contingency Plan, Section G and Section II.D of the permit renewal application, as necessary to assure its proper operation in time of emergency as required by ADEM Admin. Code R. 335-14-5-.03(4).

3. Access to Communication or Alarm System

   The Permittee shall maintain access to the communications or alarm system as required by ADEM Admin. Code R. 335-14-5-.03(5).

4. Arrangements with Local Authorities

   The Permittee shall maintain arrangements with state and local authorities as required by ADEM Admin. Code R. 335-14-5-.03(8). The Permittee shall develop and maintain a Preparedness and Prevention Plan providing information on the type, approximate quantities and locations of hazardous wastes within the facility. The Plan shall be provided to state and local authorities in both written paper format and in an appropriate electronic format that is most useful to emergency responders, and updated copies of the Plan shall be provided as needed to reflect significant changes in operations (e.g., significant changes in waste streams and/or volumes, facility design changes, etc.). A copy of the Plan and documentation that the Plan has been submitted to all local police departments, fire departments, hospitals and local emergency response teams that may be called upon to provide emergency services, shall be submitted to the Department within 45 days from the effective date of this permit for review. If state or local officials refuse to enter into preparedness and prevention arrangements with the Permittee, the Permittee must document this refusal in the operating record.

5. Required Aisle Space

   The Permittee must maintain aisle space to allow the unobstructed movement of personnel, fire protection equipment, spill control equipment, and decontamination

Draft

equipment to any area of facility operation in an emergency (ADEM Admin. Code R. 335-14-5-.03(6)).

II.J. CONTINGENCY PLAN

1. Implementation of Plan

   The Permittee shall immediately carry out the provisions of the Contingency Plan, (Section G and Section II.D of the permit renewal application) and follow the emergency procedures as required by ADEM Admin. Code R. 335-14-5-.04(2) whenever there is a fire, explosion, or release of hazardous waste or hazardous constituents which threatens or could threaten human health or the environment.

2. Copies of Plan

   A copy of the Contingency Plan and all current revisions to the plan must be maintained at the facility and submitted to all local police departments, fire departments, hospitals, and state and local emergency response teams that may be called upon to provide emergency services, as described in Section G and Section II.D of the permit renewal application, and as required by ADEM Admin. Code R. 335-14-5-.04(4).

3. Amendments to Plan

   The Permittee shall review and immediately amend, if necessary, the Contingency Plan, as required by ADEM Admin. Code R. 335-14-5-.04(5).

4. Emergency Coordinator

   The Permittee shall comply with the requirements of ADEM Admin. Code R. 335-14-5-.04(6) concerning the emergency coordinator as specified in the Contingency Plan, (Section G and Section II.D of the permit renewal application).

II.K. RECORDKEEPING AND REPORTING

1. Operating Record

   The Permittee shall maintain a written operating record at the facility in accordance with ADEM Admin. Code R. 335-14-5-.05(4).

2. Availability, Retention, and Disposition of Records

   The Permittee shall comply with the Availability, Retention, and Disposition of Records at the facility in accordance with ADEM Admin. Code R. 335-14-5-.05(5).

3. Biennial Report

   The Permittee shall comply with the biennial report requirements of ADEM Admin. Code R. 335-14-5-.05(6).

Draft

II.L. CLOSURE

1. Performance Standard

   The Permittee shall close the permitted hazardous waste management areas, as required by ADEM Admin. Code R. 335-14-5-.07(2), 335-14-5-.09(9), 335-14-5-.10(8), and in accordance with the Closure Plan, Section I-1 and Section II.F of the permit renewal application.

2. Amendment to Closure Plan

   The Permittee shall amend the Closure Plan as required by ADEM Admin. Code R. 335-14-5-.07(3)(c).

3. Notification of Closure

   As required by ADEM Admin. Code R. 335-14-5-.07(3)(d), the Permittee shall notify the Department at least 60 days prior to the date closure activities are initiated at either unit.

4. Time Allowed for Closure

   The Permittee shall comply with the requirements of ADEM Admin. Code R. 335-14-5-.07(4). After receiving or treating the final volume of hazardous waste, the Permittee shall complete closure activities in accordance with the schedule specified in the Closure Plan, Section I-1 and Section II.F of the permit renewal application.

5. Disposal or Decontamination of Equipment

   The Permittee shall decontaminate or dispose of all facility equipment as required by ADEM Admin. Code Rules 335-14-5-.07(5), 335-14-5-.09(9), 335-14-5-.10(8), 335-14-5-.11(9), and 335-14-5-.12(9) and as specified in the Closure Plan, Section I-1 and Section II.F of the permit renewal application.

6. Certification of Closure

   The Permittee shall certify that each individual unit has been closed in accordance with the specifications presented in the Closure Plan, (Section I-1 and Section II.F of the permit renewal application), as required by ADEM Admin. Code R. 335-14-5-.07(6). The Permittee shall maintain copies of this closure certification in the facility operating record as required by ADEM Admin Code R. 335-14-5-.05(4).

II.M. POST-CLOSURE

If at closure, not all waste and contaminated structures and soils at a unit can be removed or decontaminated, the Permittee shall close the container storage or treatment unit as a landfill and perform post-closure care as specified in ADEM Admin. Code R. 335-14-5-.09(9)(b) and 335-14-5-.14(11).

1. Post-Closure Care Period

Draft

The Permittee shall begin post-closure care at all units where closure by removal is not achieved, after completion of unit closure and shall continue for the duration of the post-closure period. The post-closure care period shall continue for a period of 30 years after the closure of each hazardous waste management unit, unless shortened or extended Pursuant to ADEM Admin. Code Rule 335-14-5-.07(8). Each post-closure care period is initiated upon certification by a registered Professional Engineer (State of Alabama) and upon acceptance by the Department pursuant to ADEM Admin. Code R. 335-14-5-.07(6), that closure has been completed and waste has been left in place. The post-closure care period shall automatically extend through the end of the compliance period specified in Condition VII.B.4 of this permit.

2. Post-Closure Security

The Permittee shall maintain security at the facility during post-closure care in accordance with the post-closure plan included in the permit application.

3. Amendment to Post-Closure Plan

The Permittee shall amend the Post-Closure Plan in accordance with ADEM Admin. Code R. 335-14-5-.07(9), whenever necessary.

4. The Permittee shall maintain continuous compliance with the following:

   a. Post closure care of property. (ADEM Admin. Code R. 335-14-5-.07(8))

   b. Notice to local land authority and in deed to property. (ADEM Admin. Code R. 335-14-5-.07(10))

II.N. LAND DISPOSAL RESTRICTIONS

1. General Restrictions

ADEM Admin. Code R. 335-14-9 identifies hazardous wastes that are restricted from land disposal and defines those limited circumstances in which an otherwise prohibited waste may continue to be placed on or in a land treatment, storage or disposal unit. The Permittee shall maintain compliance with the requirements of ADEM Admin. Code R. 335-14-9. Where the Permittee has applied for an extension, waiver, or variance under ADEM Admin. Code R. 335-14-9 the Permittee shall comply with all restrictions on land disposal under this Part once the effective date for the waste has been reached pending final approval of such a land disposal permit application.

2. Land Disposal Prohibitions and Treatment Standards

   a. A restricted waste identified in ADEM Admin. Code R. 335-14-9-.03 may not be placed in a land disposal unit without further treatment unless the requirements of ADEM Admin. Code R. 335-14-9-.03 and/or .04 are met.

   b. The storage of hazardous wastes restricted from land disposal under ADEM Admin. Code R. 335-14-9 is prohibited unless the requirements of ADEM Admin. Code R. 335-14-9-.05 are met.

Draft

II.O. ORGANIC AIR EMISSION REQUIREMENTS

1. General Introduction

a. Process Vents and Equipment

Phase I Organic Air Emission Standards consist of ADEM Admin. Code R. 335-14-5-.27 and 335-14-5-.28 for hazardous waste treatment, storage, and disposal (TSD) facilities. ADEM Admin. Code R. 335-14-5-.27 contains emission standards for process vents associated with distillation, fractionation, thin-film evaporation, solvent extraction, and air or steam stripping operations that process hazardous waste with an annual average total organic concentration of at least ten (10) parts per million by weight (ppmw). ADEM Admin. Code R. 335-14-5-.28 contains emission standards that address leaks from specific equipment (i.e., pumps, valves, compressors, etc.) containing or contacting hazardous waste with a total organic concentration of at least ten-percent by weight.

b. Tanks, Containers, Surface Impoundments and Miscellaneous Units

The Phase II Organic Emission Standards consist of ADEM Admin. Code R. 335-14-5-.29 for hazardous waste treatment, storage, and disposal facilities, including certain hazardous waste generator standards for accumulating waste on-site in RCRA permit–exempt (90-day) tanks and containers. In general, under these standards air emission controls must be used for tanks, surface impoundments, containers, and miscellaneous units that contact hazardous waste containing an average organic concentration greater than 500 ppmw at the point of origination determined by the procedures outlined in ADEM Admin. Code R. 335-14-5 .29(4), except as specifically exempted under ADEM Admin. Code R. 335-14-5-.29(1) and 335-14-5-.29(3).

2. Notification of New Units

a. Process Vents and Equipment

Prior to constructing any equipment with process vents subject to the requirements of ADEM Admin. Code R. 335-14-5-.27, or installing any additional equipment subject to the requirements of ADEM Admin. Code R. 335-14-5-.28, or prior to modifying the current process such that existing equipment previously not subject to the requirement of ADEM Admin. Code R. 335-14-5-.28 the Permittee shall supply the specific Part B information required pursuant to ADEM Admin. Code R. 335-14-8-.02(15) and. 335-14-8-.02(16) as applicable, and shall obtain a permit modification in accordance with the requirements of ADEM Admin. Code R. 334-14-8-.04(3) and condition I.J of this permit.

b. Tanks, Containers, Surface Impoundments, Miscellaneous Units

Prior to installing any tank, container, surface impoundment or miscellaneous unit subject to ADEM Admin. Code R. 335-14-5-.29, or modifying an existing process waste handling or tank or container such that the unit(s) will become

Draft

subject to ADEM Admin. Code R. 335-14-5-.29, the Permitte shall obtain a permit modification under ADEM Admin. Code R. 335-14-8-.04(3), and provide specific Part B application information required under ADEM Admin. Code R. 335-14-8-.02(5) –(8) and 335-14-8-.02(18), as applicable, with the modification request.

II.P. MANIFEST SYSTEM

The Permittee shall comply with the requirements of ADEM Admin. Code Rules 335-14-5-.05(2), 335-14-5-.05(3), and 335-14-5-.05(7).

II.Q. WASTE REJECTION NOTIFICATION (RESERVED)

Draft

PART III

MANAGEMENT IN CONTAINERS

III.A. WASTE IDENTIFICATION

1. The Permittee may store the hazardous and PCB wastes listed in Part A of the permit application in containers at the facility, subject to the terms of this permit. The storage of any waste not listed in Part A of the permit application is prohibited.

2. The Permittee shall not store mixed waste in containers at the facility.

3. The maximum quantity of waste that can be stored at one time in the container storage area (33 storage igloos) is 7920 fifty-five gallon drums or 435,600 gallons. Individual igloo storage limits for hazardous waste storage buildings are specified in Table III.1. Note that some of the igloos listed in the table require upgrades prior to use.

4. The Permittee may treat the wastes identified in Condition III.C and Table III.2 of the permit at the Phase 2 explosive destruction system (EDS) unit(s). The treatment of any waste not listed or identified herein is prohibited.

III.B. STORAGE IN CONTAINERS

1. The container capacity is distributed throughout the container storage area as shown in Table III.1 of this permit, and as described in Section D-1 of the permit application. The maximum quantity of hazardous waste stored in each unit or containment area shall not exceed the capacity listed in Table III.1 of this permit.

2. The Permittee shall maintain and operate the container storage areas in accordance with the procedures specified in Section D-1 of the permit application.

3. The maximum combined quantity of hazardous and non-hazardous waste stored in a given area shall not exceed ten times the capacity of the containment system for that area. No individual container may be stored in a given area whose volume exceeds the capacity of the containment system for that area.

4. The sampling and staging of drums shall not exceed 72 hours. All containers that are to be fingerprinted or are awaiting analysis shall be segregated from other containers in the container storage area. Each container shall be marked with the date of receipt.

III.C. TREATMENT IN CONTAINERS

The Permittee shall not treat hazardous waste in containers at the storage facility except as prescribed in Condition III.C of this permit.

1. EDS Description

Draft

a. EDS units are container like, trailer-mounted, transportable treatment systems comprised primarily of a Containment Vessel. Items are loaded into the Containment Vessel, shape charges are used to access the chemical fill and detonate the munition buster explosives if present, and the exposed chemical fill is treated with reagent. After the treatment level is confirmed, the neutralent is drained into a liquid waste container and the Containment Vessel is rinsed and purged. When the vapor concentration in the Containment Vessel is confirmed safe, the vessel door is opened and solid waste materials are removed to solid waste containers. Engineering descriptions of the EDS design and operation are located in Section D of Section M of the permit application.

b. Up to two EDS units shall be located within the 8200 block of igloos at approximately N 34° 34’ and W 86° 39’. The EDS unit(s) location(s) is shown on Figures B-2-1 and B-2-2 of Section M of the permit application.

c. The Permittee may use the EDS unit(s) to process recovered munitions or other items that contain chemical agent or industrial chemical fills. Items to be treated may or may not have an explosive component.

2. Permitted and Prohibited Waste Identification

a. The Permittee may use up to two Phase 2 EDS units at the facility to treat the hazardous wastes listed on Table III.2 of this permit, subject to the terms of this permit. Anticipated chemicals are listed in Section C of Section M of the permit application and safety data sheets for these items are provided in Attachment C-1 of Section M of the permit application.

b. The Permittee shall not treat any hazardous waste that is not specified in Table III.2 in an EDS unit.

c. The Permittee shall use process knowledge and information obtained from nondestructive tools (e.g., x-rays, physical appearance, portable isotopic neutron spectroscopy (PINS), etc.) and Materiel Assessment Review Board (MARB) review to identify the recovered items.

d. The treatment of items containing depleted uranium, white phosphorous or red phosphorus is prohibited.

e. Items that can be processed are limited to those recovered from on-site or from the contiguous facility, Marshall Space Flight Center.

3. Operation

a. The EDS units shall be operated by properly trained personnel in accordance with the EDS Standard Operating Procedures (SOPs) (included in Attachment 1 of Section M of the permit application) and Section D of Section M of the permit application.

b. Each Phase 2 EDS unit will be housed and operated within an environmental enclosure as described in Attachment D-1 of Section M of the permit application.

i. The environmental enclosure shall include a ceiling, sides and flooring to protect the EDS from precipitation and reduce the potential for

Draft

contaminated runoff.

ii. The environmental enclosure shall be equipped with multiple doors for entrance and egress.

iii. The environmental enclosure shall be maintained under negative pressure during ongoing operations to minimize the potential for airborne releases.

iv. Each enclosure shall be connected to at least one air filtration system (AFS) and shall have an induced draft fan to maintain a negative pressure within the enclosure relative to the outside air to capture any released vapors. The AFS shall include the components described in Attachment D-4 of Section M of the permit application.

v. The enclosure shall include impermeable flooring.

vi. Personnel shall don the protective clothing specified in the SOPs, found in Attachment 1 of Section M of the permit application, prior to entering the environmental enclosure.

vii. Open flames, smoking, cutting or welding hot surfaces, frictional heat and sparks are prohibited in the environmental enclosure when munitions are present.

c. Each EDS unit shall be equipped with a power generating system capable of providing power for critical and essential loads in the event of a power outage.

d. As described in Section D-1 of Section M of the permit application, a minimum of two feet of aisle space will be maintained within the environmental enclosure between containers, and the EDS unit and the environmental enclosure sides to allow for unobstructed visual inspections, movement of waste handling equipment, personnel and fire protection, spill control, and decontamination equipment response to an emergency.

e. The trailer supporting the EDS unit shall have a secondary containment pan to collect any spilled liquids.

f. The work areas shall be monitored for the appropriate chemical vapors.

i. MINICAMS® shall be operated at all times that items are within the enclosure, as described in Section M of the permit application.

ii. MINICAMS® alarms shall be confirmed by Depot Area Air Monitoring (DAAMS) tubes, colorimetric tubes, and/or dosimeter badges as specified in Attachment F-3 of Section M of the permit application.

iii. Monitoring personnel shall maintain documentation of all monitoring activities as specified in Attachment F-3 of Section M of the permit application.

g. Each EDS unit may be operated to treat one to six recovered munitions or other items simultaneously, provided that the total net explosive weight (NEW) does not exceed the value established for the EDS unit.

h. Each Phase 2 EDS unit may be used to detonate up to 4.8 pounds of trinitrotoluene (TNT) equivalent explosives (NEW), including the munitions and the donor charges per treatment event.

Draft

i. Treatment shall be completed in accordance with the SOP included in Attachment 1 of Section M of the permit application to deactivate any explosive component, reduce the toxicity of the chemical fill and explosive residues and decontaminate the item or munition casing fragments before shipment to an offsite permitted treatment, storage, and disposal facility (TSDF).

   i. The items to be processed shall be placed in an expendable holder that will in turn be placed in a fragment suppression system (FSS) or an advanced fragment suppression system (AFSS), depending on the types and number of items being treated.
   ii. Shape charges and detonators shall be placed on the munition holder.
   iii. The FSS or AFSS shall be placed within the containment vessel and the containment vessel shall be closed and checked for leaks using a helium leak detector. If the leak test fails, the protocol in Annex H of the EDS SOPs shall be followed.
   iv. The shape charges shall be detonated to expose the chemical/industrial fill and detonate the munition burster explosives if present. The appropriate reagent shall be added to the containment vessel to neutralize the chemical/industrial fill.
   v. The containment vessel shall be rotated and heated as needed (up to 100°C [212°F]) until analysis of the liquid indicates that the treatment level specified in Table D-1 of Section M of the permit application has been met.
   vi. The liquid (neutralent) shall then be drained from the containment vessel to a liquid waste container and the containment vessel shall be rinsed with clean, heated water. The waste container shall have secondary containment to collect any spilled liquid.
   vii. The rinse water shall be drained from the containment vessel into another suitable waste container. The waste container shall have secondary containment to collect any spilled liquid.
   viii. The containment vessel shall then be purged with an inert gas and headspace samples shall be taken and analyzed.
   ix. After sampling indicates that chemical agent vapor levels are safe as shown on tables F-3-1, F-3-2, F-3-3 and F-3-4 located in Attachment F-3 of Section M of the permit application, the containment vessel door shall be opened, the solid wastes shall be visually inspected for any unexploded energetic material, removed from the containment vessel and placed into a container for solid wastes. If any unexploded components are found, they will be segregated from other solid wastes, placed in a separate container and transferred to explosive ordnance disposal (EOD) personnel for disposition, or retreated in the EDS during a subsequent treatment event.
   x. The containment vessel shall be rinsed to remove any remaining debris. The resulting liquid and solid wastes shall be placed in suitable waste containers.
   xi. All waste containers shall be placed in 90-day waste storage areas or a permitted storage igloo pending waste characterization and shipment offsite for further treatment or ultimate disposal in accordance with Table C-1-2 of Section M of the permit application. The waste containers shall be maintained as described in the following sections of this permit.

Draft

j. Prior to treating subsequent chemical-filled items, the Containment Vessel interior shall be cleaned. The interior vessel wall, sealing surface, and door shall be visually inspected for damage or other impairments to the proper operation of the unit. The Containment Vessel door metal seal and O-ring will be replaced after each shot. The electrical connection fittings that connect the firing system to the detonators shall be replaced as necessary.

4. Inspection

a. The Permittee shall inspect the EDS units prior to operation and each operating day, in accordance with Table F-2-1 and the Operational Inspection checklists included in Attachment F-1 of Section M of the permit application.

b. The Permittee shall inspect the RSA EDS site monthly, in accordance with Table F-2-1 and following the checklist included in Attachment F-1 of Section M of the permit application.

c. If the EDS containment vessel becomes unfit for continued use, the Permittee shall remove the EDS from service. The containment vessel shall be considered unfit for continued use if a major release or incident that results in impairment to the containment vessel integrity requiring repair beyond routinely expected maintenance occurs.

d. The monitoring devices shall be inspected prior to use and each operating day as detailed in Section F-2 and Table F-2-1 of Section M of the permit application.

f. Any leaking equipment, including hose lines and pumps, shall be repaired or replaced as soon as operationally feasible and prior to processing the next item.

5. Record Keeping

a. The Pemittee shall record leak test and worker safety monitoring results and include this information in the EDS operation record. The Permittee shall maintain the EDS operating record in accordance with Condition I.C.10 of this permit.

b. The Permittee shall maintain inspection logs, including any corrective actions taken, at the RSA EDS site. The Permitte shall maintain all repair and maintenance records for all instruments and instrument systems as part of the operating record required by ADEM Admin. Code R. 335-14-5-.05(4).

c. The Permittee shall maintain the training records of all personnel involved in EDS hazardous waste management operations and activities in accordance with Condition II.F of this permit.

e. The Permittee shall maintain documentation on all samples collected, chain-of-custody, results, and reports received. All information will become part of the operating record and shall be kept until EDS site closure, in accordance with Condition II.K of this permit.

Draft

f. EDS operators shall keep a log of events that occur during a work shift, including all activities preceding, during, and following the destruction of recovered munitions or items, any near real-time (NRT) monitoring alarms, and historical monitoring confirmations. This log shall be maintained as part of the operating record in accordance with Condition II.K of this permit.

6. Contingency

The contingency plan, as detailed in Section G of Section M of the permit application, shall be maintained at the RSA EDS command post location. A copy of the contingency plan and any and all revisions to the plan shall be submitted to all local law enforcement departments, fire departments, hospitals, and State and local emergency response teams [including the ADEM Field Operations Division] that may be called upon to provide emergency services, in accordance with Condition II.J of this permit. Any incident that necessitates implementing the contingency plan shall be followed by a written report to the Department within five days, in accordance with Condition I.C.12 of this permit. The written report shall document the incident and follow-up actions.

7. Closure and Post Closure

a. The Permittee shall service, clean, disassemble, and decontaminate (if necessary) EDS components in accordance with EDS SOPs (Attachment 1 of Section M of the permit application) and Section I of Section M of the permit application so that the EDS may be reused for subsequent or future operations at the same RSA location, a new RSA location, or moved to an off-site location.

b. When the EDS operation is no longer required at RSA, the unit(s) shall undergo closure in accordance with the closure plan provided in Section I of Section M of the permit application and Condition II.L of this permit.

c. Within 60 days of completing closure, the Permittee shall submit to the Department a closure report describing the closure activities conducted. The closure report shall include, but not be limited to:
   i. Confirmatory sampling results demonstrating clean closure of the EDS.
   ii. Closure certification signed by the Permittee and a qualified, Alabama-licensed Professional Engineer.

III.D. CONDITION OF CONTAINERS

If a container holding hazardous waste is not in good condition (e.g., severe rusting, apparent structural defects) or if it begins to leak, upon discovery the Permittee shall immediately transfer the hazardous waste from such container to a container that is in good condition or otherwise manage the waste in compliance with the conditions of ADEM Admin. Code R. 335-14-5-.09(2).

III.E. COMPATIBILITY OF WASTE WITH CONTAINERS

The Permittee shall assure that the ability of the container to contain the waste is not impaired, as required by ADEM Admin. Code R. 335-14-5-.09(3).

Draft

III.F. MANAGEMENT OF CONTAINERS

1. The Permittee shall manage containers as required by ADEM Admin. Code R. 335-14-5-.09(4) and Section D-1 of the permit application.

2. A container holding hazardous waste must always be closed during storage, except when it is necessary to add, remove, sample, or inspect the waste.

3. A container holding hazardous waste must not be opened, handled, or stored in a manner which may rupture the container or cause it to leak.

4. At least 24 inches of aisle space will be maintained at all times, as discussed in Section D-1 of the storage permit application, and as necessary to provide adequate access for emergency equipment and inspection.

5. Containers having a capacity greater than or equal to 30 gallons shall not be stacked over two containers high at any time.

III.G. CONTAINMENT

1. The Permittee shall maintain the containment systems of the container storage in accordance with the requirements of ADEM Admin. Code R. 335-14-5-.09(6)(b), and as specified in Section D-1 of the permit application.

2. The Permittee shall maintain an impervious coating that is free of cracks, gaps, or other deterioration on all containment system surfaces which may be exposed to hazardous wastes or hazardous constituents (or releases of hazardous wastes or hazardous constituents).

III.H. INSPECTIONS

Weekly, the Permittee shall inspect areas where containers are stored or handled to detect leaking containers and deterioration of containers or containment systems and to ensure stacking is no more than two high as specified in Section III.F.5. of this permit and as required by ADEM Admin. Code R. 335-14-5-.09(5). The Permittee shall note the number and capacity of hazardous waste containers present.

III.I. SPECIAL REQUIREMENTS FOR IGNITABLE OR REACTIVE WASTES

1. The Permittee shall not locate containers holding ignitable or reactive waste within 15 meters (50 feet) of the facility's property line as required by ADEM Admin. Code R. 335-14-5-.09 (7).
2. The Permittee shall take precautions to prevent accidental ignition or reaction of ignitable or reactive waste and follow the procedures specified in Section C-2g of the permit application and as required by ADEM Admin. Code R. 335-14-5-.02(8).

Draft

III.J. SPECIAL REQUIREMENTS FOR INCOMPATIBLE WASTE

The Permittee shall separate containers of incompatible wastes as specified in Section C-2g of the permit application.

1. Except as specifically addressed in Condition III.C of this permit, incompatible wastes, or incompatible wastes and materials, must not be placed in the same container unless the Permittee is in compliance with ADEM Admin. Code R. 335-14-5-.02(8)(b).

2. The Permittee shall not place hazardous waste in an unwashed container that previously held an incompatible waste or material.

3. The Permittee must document compliance with Conditions III.J.1. and III.J.2. of this permit as required by ADEM Admin. Code R. 335-14-5-.05(4) and place this documentation in the operating record.

4. The Permittee shall separate containers of incompatible wastes as required by ADEM Admin. Code R. 335-14-5-.09(8)(c).

Draft

Table III.1

HAZARDOUS WASTE STORAGE IGLOOS

Igloo	Storage Dimensions	Max. Volume (gallons)**
Bldg 8205	26’5” x 81	13,200
Bldg 8208	26’5” x 81	13,200
Bldg 8209*	26’5” x 81	13,200
Bldg 8210*	26’5” x 81	13,200
Bldg 8211	26’5” x 81	13,200
Bldg 8212	26’5” x 81	13,200
Bldg 8213	26’5” x 81	13,200
Bldg 8214	26’5” x 81	13,200
Bldg 8216	26’5” x 81	13,200
Bldg 8217*	26’5” x 81	13,200
Bldg 8218*	26’5” x 81	13,200
Bldg 8219	26’5” x 81	13,200
Bldg 8220	26’5” x 81	13,200
Bldg 8221	26’5” x 81	13,200
Bldg 8222*	26’5” x 81	13,200
Bldg 8223*	26’5” x 81	13,200
Bldg 8224	26’5” x 81	13,200
Bldg 8225*	26’5” x 81	13,200
Bldg 8226	26’5” x 81	13,200
Bldg 8227	26’5” x 81	13,200
Bldg 8228	26’5” x 81	13,200
Bldg 8229*	26’5” x 81	13,200
Bldg 8230*	26’5” x 81	13,200
Bldg 8231	26’5” x 81	13,200
Bldg 8621	26’5” x 81	13,200
Bldg 8622	26’5” x 81	13,200
Bldg 8623	26’5” x 81	13,200
Bldg 8624	26’5” x 81	13,200
Bldg 8625	26’5” x 81	13,200
Bldg 8630	26’5” x 81	13,200
Bldg 8631	26’5” x 81	13,200
Bldg 8632	26’5” x 81	13,200
Bldg 8633	26’5” x 81	13,200

Notes: * Requires upgrades prior to use
** Max. Volume includes all waste (regulated and non-regulated) stored in the igloos.

Draft

Table III.2

Permitted Waste Codes for the Explosive Destruction System (EDS)

USEPA Hazardous Waste Number	Waste Description
D001	Ignitable waste
D002	Corrosive waste
D003	Reactive waste
D004	Arsenic
D005	Barium
D006	Cadmium
D007	Chromium
D008	Lead
D009	Mercury
D010	Selenium
D011	Silver
D018	Benzene
D019	Carbon tetrachloride
D022	Chloroform
D028	1,2-dichloroethane
D029	1,1-dichloroethylene
D030	2,4-dinitrotoluene
D034	Hexachloroethane
D039	Tetrachloroethylene
D040	Trichloroethylene
D043	Vinyl chloride
P036	Dichlorophenylarsine
P095	Carbonic dichloride

Draft

PART IV

THERMAL TREATMENT

IV.A. DESCRIPTION

1. The OB and OD Units occupies approximately 59 acres located in the southwestern portion of RSA at approximately N 34°34' and W 86°40'. The unit(s) locations are shown in Figures II.A-1, 4, and 5 of the permit renewal application. Thermal treatment of hazardous waste by means other than as specifically authorized by this permit is prohibited. The following units are permitted for treatment of hazardous wastes:

   a. Open Burning (OB) Units – SWMU 12

   b. Open Detonation (OD) Unit – SWMU 131

2. The Permittee is allowed to thermally treat (via open burning and open detonation) hazardous energetic and energetic-contaminated waste that is generated on-site or at the contiguous facility, Marshall Space Flight Center (AL1 800 013 863). Structural dimensions and other details for the burn pans and OD area are found in Section III.A of the permit renewal application.

3. Treatment by open burning (OB) may be conducted in the OB unit, consisting of five burn pans dedicated to the thermal destruction of propellants, explosives, energetic-contaminated waste and propellant and D003-contaminated solvents. All burn pans shall be similarly constructed, as shown in Appendix III.A-A of the permit renewal application. One burn pan, pan No. 3, shall be exclusively used to thermally treat D003-contaminated solvents and shall have spill containment surrounding the base structure as shown in Appendix III.A-A of the permit renewal application. The OB of any waste not described in this section, is prohibited without prior approval from the Department.

4. Treatment by open detonation (OD) may be conducted in the designated area for the detonation of energetic wastes in pits. The OD unit consists of seven detonation pit areas surrounded on three sides with earthen bunkers as depicted in Section III.A3 of the permit renewal application. The OD of any waste not described in this section is prohibited, without prior approval from the Department.

IV.B. PERMITTED AND PROHIBITED WASTE IDENTIFICATION

This permit allows RSA to treat United Nations Organization (UNO) Class 1 materials at the OB and OD units, as noted in the permit renewal application. Waste treated at the OB and OD units exhibits the RCRA hazardous characteristic of reactivity (i.e. D003). Such waste may consist of (1) fired and unfired munitions items (rocket motors, warheads, shells, grenades, flares), (2) munitions components (e.g., fuses, detonators, rocket motor igniters), (3) bulk energetics (propellants and explosives), and (4) energetic-contaminated materials. The wastes treated at the OB and OD units shall not contain pesticides, herbicides, dioxins, or PCBs. Pentachlorophenol (PCP)-treated wood and beryllium and/or waste containing beryllium are

Draft

prohibited from treatment at the OB and OD units. Waste types and waste characteristics are detailed in Sections II.A and II.B of the permit renewal application.

Thermal treatment of hazardous waste by means other than as specifically authorized by this permit is prohibited. Treatment of recovered liquid-filled rounds, chemical warfare materiel or components thereof, liquid agent-contaminated explosive components, and items containing depleted uranium, either loaded or expended, are prohibited. Treatment of loaded munitions or components containing colored smokes, white phosphorous, red phosphorous, hexachlorethane, or riot control agents is prohibited.

IV.C. OPERATION

1. Meteorological Restrictions

The listed meteorological restrictions are applicable to both open burning and open detonation treatment operations. Treatment is allowed subject to the requirements of this permit under the following weather conditions:

i. Less than a 50 percent chance of precipitation (including thunderstorms or electrical storms),

ii. Average wind speed between 3 and 20 miles per hour,

iii. Cloud cover less than 80 percent and ceilings greater than 2,000 feet, and

iv. Wind direction is not from 29° to 121° measured east of north.

2. Other Restrictions

i. Operations are limited to the period between ½ hour after sunrise and ½ hour before sunset,

ii. Open burning will be conducted in each pan no more than once per day, and

iii. Open detonation will be conducted in each pit no more than twice per day.

3. Treatment Quantities Per Unit

The following quantity of material may be treated at the OB and/or OD units, expressed as net explosive weight (NEW). NEW is the total quantity of energetics (explosives, oxidizer propellant, and pyrotechnics). Explosive limits have also been established for the OB and OD units and these limits also cannot be exceeded at any time. The operating limits are as follows:

i. 50 pounds NEW per open detonation pit (total of 350 pounds NEW per day for the seven detonation pits)

ii. 100 pounds NEW consisting of hazard class 1.1 material per burn pan (total limit of 500 pounds NEW of hazard class 1.1 material for the five open burn pans).

Draft

iii. 2000 pounds NEW consisting of hazard class 1.3 material per burn pan (total limit of 10,000 pounds NEW of hazard class 1.3 material for the five open burn pans)

iv. 1000 pounds NEW consisting of oxidizer material per burn pan (total limit of 5000 pounds oxidizer NEW for the five open burn pans)

v. D003-contaminated solvents containing 900 pounds NEW or less including demolition material at burn pan No. 3

vi. 50 pounds NEW consisting of dynamite per burn pan (total limit of 250 pounds dynamite NEW for the five open burn pans)

vii. 100 pounds NEW consisting of test rocket motors, including ignition materials at any one of the five open burn pans

4. Maximum Operating Rates

The daily maximums and annual treatment quantities are as follows:

i. Daily Maximums:

OD - 1.1 or 1.3 hazard class materials
7 pits x 25 pounds NEW/pit x 2 operations/day = 350 pounds NEW/day
or 7 pits x 50 pounds NEW/pit x 1 operation/ day = 350 pounds NEW/day

OB - 1.1 hazard class materials
5 burn pans x 100 pounds NEW/pan x 1 operation/day = 500 pounds NEW/day

OB - 1.3 hazard class materials
5 burn pans x 2000 pounds NEW/pan x 1 operations/day = 10,000 pounds NEW/day

ii. Annual Maximum Treatment Quantities:

OD - 1.1 and 1.3 hazard class materials = 17,500 pounds NEW/year

OB - 1.1 and 1.3 hazard class materials = 120,000 pounds NEW/year

5. Residue Control

The open burning operation of waste materials results in the generation of ash and scrap metal. Ash residue and scrap metal residue shall be handled in the following manner:

Ash Residue:

i. At the completion of each burn, the Permittee will allow a reasonable cooling period and then verify via visual inspection that all of the reactive material has been properly treated.

Draft

ii. Ash shall be removed from the burn pan. The ash is to be placed into DOT-approved 55-gallon drums with lids and closure rings. One drum shall be dedicated to each burn pan and ash from different pans shall not be co-mingled.
iii. The drums shall be properly labeled with the appropriate hazardous waste designation including the pan number, applicable RCRA waste codes, and the date the waste was first placed into the drum.
iv. The drums shall be removed to the satellite accumulation area and kept closed except to add more ash or to collect samples.
v. When the drum is determined to be full, it shall be given a 90-day accumulation start date and moved to the 90-day area for sampling in accordance with Section II.B.2 (Waste Analysis Plan) of the permit renewal application.
vi. All drums shall be managed in accordance with all state and Federal regulations governing hazardous waste handling and disposal. Wind dispersal of ash shall be controlled by limiting burns in accordance with Permit Condition IV.C. When ash is present, lids are to be placed on the burn pans. Lids shall be used to prevent precipitation from accumulating in the burn pans.

Scrap Metal:

i. At the completion of each burn, the Permittee will allow a reasonable cooling period and then verify via visual inspection that all the reactive material has been properly treated.
ii. The scrap metal shall be collected, sorted according to type (light metal, heavy metal, aluminum, brass, etc.), loaded onto trucks, and transported to the Permittee's Logistics Agency (DLA) Disposition Services - Huntsville for recycling or disposal.

a. The open detonation operation generates metal fragments, unexploded items, and non-metallic residuals ejected from the open detonation area.

i. Metal Fragments (Shrapnel)

At the completion of each detonation series, the Permittee will visually inspect the active portion of the detonation area for the presence of shrapnel (metal fragments). Any fragments/shrapnel that are (1) observable on the soil and (2) measure 4 inches or greater in any dimension shall be collected and removed. Any shrapnel found shall be visually inspected to verify that the energetic component of the waste munition has been successfully treated. If shrapnel is observed or suspected to contain unreacted energetics, it shall be retreated with the next available detonation. If shrapnel is found to be free of energetics, it will be certified as explosive-free and removed as scrap metal.

ii. Other residuals

At the completion of each operating day the immediate area surrounding the active portion of the detonation pits shall be visually inspected for the presence of unexploded items or ejected items including munitions or components thereof.

Draft

All items found shall be re-treated in the next available detonation. At least monthly the inspection area shall include a boundary designated by the facility which shall encompass all potential areas where ejected material may fall beyond the immediate area of the active portion of the unit.

IV.D. INSPECTION

The Permittee is required to conduct routine inspections at the OB and OD units, as established in Section II.C.2 of the permit renewal application. During such inspections, the Permittee will check for malfunction and/or deterioration, operator error, and evidence of discharge, that may cause or lead to the release of hazardous constituents or that may have caused or lead to a potential threat to human health or the environment. These inspections shall be conducted at frequencies specified in Table II.C-1 of the permit renewal application to correct non-compliances before they can harm human health or the environment.

Any equipment or structure deterioration or malfunction (i.e., non-compliance) identified in the inspection must be promptly remedied to ensure the non-compliance does not cause environmental or human health hazard. If a hazard is determined to be imminent, or has already occurred, remedial action must be taken immediately. No further OB or OD operations are allowed to commence if the non-compliance has the potential to cause imminent hazard. If a non-compliance cannot be remediated within 48 hours, the Permittee shall notify the Department within 3 working days and submit a written report to the Department within 14 days of discovering the non-compliance.

Inspections shall be performed in accordance with Section II.C.2 of the permit renewal application. Documentation of the required inspections shall be documented in accordance with Table II.C-1, Inspection Items and Schedule, of the permit renewal application. All areas subject to spills (loading and unloading areas, and burn pans) are required to be inspected daily when in use.

IV.E. GROUNDWATER MONITORING PROGRAM

A groundwater monitoring program shall be established for the OB and OD units in accordance with the requirements in Section VII of this permit.

Groundwater underlying the OB and OD units is required to be monitored throughout the operating life of the OB and OD units per Permit Condition IV.E. and Section II.G of the permit renewal application. If at the time of closure the current and historical groundwater monitoring results indicate no evidence of contamination from the OB and OD units, then the groundwater will be considered un-impacted by OB and OD operations. If groundwater contamination is present from OB and OD operations, then the Permittee must address continued groundwater monitoring and corrective action in the post-closure plan.

IV.F. AIR MONITORING

Operating limits presented in Table III.C-1 of the permit renewal application are established by this permit to minimize the potential for impacts from OB and OD Units air releases at RSA and to ensure protection of human health and the environment.

Draft

IV.G. CLOSURE AND POST-CLOSURE PLAN

The Permittee shall close the OB and OD Units in accordance with ADEM Admin. Code R. 335-14-5-.07 and Section II.F of the permit renewal application. If clean closure according to ADEM Admin. Code R. 335-14-5-.07(2) can not be obtained, then the Permittee will submit a post-closure plan as part of a permit modification per Permit Condition I.J.

1. Closure Procedures

   a. All untreated reactive hazardous wastes, contaminated ash residue, unexploded ordnance (UXO), contaminated concrete pads, and contaminated soils shall be removed from the OB and OD units as described in Section II.F of the permit renewal application and disposed in accordance with all state and Federal regulations governing hazardous waste handling and disposal.

   b. All burn pans and lids shall be decontaminated or disposed as required by ADEM Admin. Code R. 335-14-5-.07(5) and as described in Section II.F of the permit renewal application. Burn pans and lids may be removed from the OB and OD units and disposed as scrap metal or may be put to other use at RSA.

   c. The concrete pan supports and concrete pads shall be decontaminated and/or cleaned to remove untreated waste and/or ashes as required by ADEM Admin. Code R. 335-14-5-.07 and as described in Section II.F of the permit renewal application. The supports and pads may be left in place if decontaminated to acceptance criteria or disposed of as a non-hazardous waste. If concrete can not be cleaned and properly decontaminated, it shall be disposed per Permit Condition IV.G.1.a.

   d. All soil in the area of the OB and OD units will be sampled for contamination per the ADEM approved closure plan (as described in Section II.F of the permit renewal application) required by Permit Condition IV.G. If decontamination of soil can not be attained during approved closure activities, the OB and OD unit will be closed in accordance with ADEM Admin. Code R. 335-14-5-.07 and an approved post-closure plan.

   e. If the OB and OD units can not be clean-closed and certified for unrestricted use pursuant to the Uniform Environmental Covenant Act (UECA)[ADEM Admin. Code R. 335-5 and ADEM Policy Memorandum #304], then a Land Use Control Plan must be developed and submitted in the post-closure plan.

Draft

PART V

SWMUs and AOCs ON OPERATIONAL RANGES

V.A APPLICABILITY

The conditions of this Part apply to the management, investigation and remediation of SWMUs and AOCs located on operational ranges identified in Section L-1 (Table L7) of the permit renewal application and which are defined in Condition 1.E of this permit and ranges listed on the Department of Defense Operational Range Inventory.

V.B. IDENTIFICATION AND ASSESSMENT OF SWMUs and AOCs ON OPERATIONAL RANGES

1. The Permittee shall ensure proper policing and management of operational ranges at the facility to minimize the present and future impacts to human health and the environment resulting from range operations and to ensure compliance with ADEM Admin. Code R. 335-14-7-.13(3). The Permittee may demonstrate compliance with this requirement at the facility as follows:

   a. The Permittee has prepared a draft final Phase I Operational Range Assessment (ORA) dated August 24, 2009 in concert with the Army's Sustainable Range Program to evaluate possible off-range migration of munitions constituents from operational ranges. The Phase I ORA is designed to evaluate the potential for releases of munitions constituents from range operations to off-range areas. The Phase I ORA shall be provided to the Department for informational purposes within 60 days following the effective date of this Permit.

   b. The Permittee must maintain a copy of the August 24, 2009 Phase I ORA and any subsequent updates at the location specified in Condition 1.C.10.e of this permit.

   c. The Operators of each range shall maintain a copy of each Standard Operating Procedure (SOP) for tests conducted on its operational test ranges. The SOPs will include the protocol for removal and disposal of munitions debris associated with the test activity. To the extent such information is not classified, the SOPs will be made available upon request.

   d. The Permittee will complete a Phase II Operational Range Assessment within two (2) years from the effective date of this permit renewal. The Phase II ORA will consider whether there are current and/or future risks to human health and the environment from off-range migration of munitions constituents. The Phase II ORA shall be provided to the Department for informational purposes within 60 days following completion of the assessment.

   e. The information required by Conditions V.B.1.b., V.B.1.c., and V.B.1.d. of this permit shall be maintained as part of the facility operating record as required by ADEM Admin. Code Rule 335-14-5-.05(4) and Condition II.K. of this permit, and shall be made available upon request.

Draft

2. The requirement to submit a comprehensive RFI pursuant to Condition VI.D. of this permit for the following units listed as SWMUs and/or AOCs in Table VI.2 will be deferred until the areas in which they are located are removed from the Army's operational range inventory or otherwise no longer qualify as operational ranges pursuant to Condition V.D. of this permit: RSA-046, RSA-071, RSA-072, RSA-073, RSA-074, RSA-129, RSA-254, and RSA-260. These are units that have been identified as RCRA regulated SWMUs and/or AOCs which have also been identified by RSA as directly related to range operations subject to the Munitions Rule (ADEM Admin. Code R. 335-14-7-.13). Any contamination on the ranges resulting from exempted military munitions use is covered under the Munitions Rule's "used for its intended purpose" exemption pursuant to ADEM Admin. Code R. 335-14-7-.13(3)(a)1. This deferral of the requirement to submit a comprehensive RFI is related to contamination from exempted military munitions use only, and does not constitute a deferral of the requirements to investigate, remediate, perform interim measures or otherwise properly address any activities or contamination co-located on such SWMUs and/or AOCs which are/were not directly related to range activities and which do not qualify for exemption pursuant to ADEM Admin. Code Rules 335-14-7-.13(3)(a), 335-14-7-.13(4)(a), 335-14-7-.13(5), or 335-14-7-.13(6)(a), as required by Conditions V.C., VI.F.1.e., or other portions of this permit.

3. The Permittee shall develop and implement a plan establishing the protocol and frequency for conducting periodic evaluations (at least annual) of range activities (e.g., review of SOPs, etc.) and inspections on ranges. This plan shall be designed and implemented in order to determine compliance with the requirements of ADEM Admin. Code R. 335-14-7-.13; to identify past and present solid waste management activities and units, including those related to ordnance activities and munitions debris, which do not qualify for exemption pursuant to ADEM Admin. Code Rules 335-14-7-.13(3)(a), 335-14-7-.13(4)(a), 335-14-7-.13(5), or 335-14-7-.13(6)(a); and to ensure that materials removed from ranges, disposed, or otherwise managed are handled in accordance with all applicable rules and regulations, and in a manner protective of human health and the environment. This plan shall be submitted to the Department within 120 days following the effective date of this permit.

4. The Permittee shall include the findings of the evaluations and inspections required in Condition V.B.3. of this permit in the operating record as required by ADEM Admin. Code R. 335-14-5-.05(4) and Condition II.K. of this permit, and shall report said findings in accordance with the requirements of Conditions VI.B. and VI.C. of this permit.

V.C INVESTIGATION AND REMEDIATION OF SWMUs and AOCs LOCATED ON OPERATIONAL RANGES

The Permittee shall coordinate with range personnel in order to determine the scheduled use of the operational ranges and conduct in a timely manner the required investigation and remediation activities (such as described in Parts VI.A.5 of this permit) for SWMUs and/or AOCs that are located on the operational range but not related to range activities, or which do not qualify for exemption pursuant to ADEM Admin. Code Rules 335-14-7-.13(3)(a), 335-14-7-.13(4)(a), 335-14-7-.13(5), or 335-14-7-.13(6)(a). The investigation and remediation of SWMUs and/or AOCs located on an operational range which are not directly related to range activities (e.g., burial pits,

Draft

prior manufacturing areas, waste management areas, etc.) shall be conducted in a timely and expeditious manner and shall not be deferred until closure or cessation of range activities or the removal of the range from the Operational Range Inventory. (ADEM Admin. Code R. 335-14-7-13(3)(a)1(iii)).

V.D REMOVAL FROM OPERATIONAL RANGE INVENTORY

1. The Permittee shall notify the Department within 30 days following removal of a range, or a portion of a range, from the Operational Range Inventory or otherwise determining that a range or portion of a range no longer qualifies as an operational range. This notification shall be accompanied by a request for permit modification (pursuant to Condition I.J of this permit) to remove the range from the Operational Range Inventory included in Section L-1 (Table L-7) of the permit renewal application.

2. Upon removal of a range, or a portion of a range, from the Operational Range Inventory, the Permittee shall comply with the requirements of Part VI (Solid Waste Management Unit/Area of Concern Identification and Evaluation) of this Permit for the entire range area (or the portion removed), including areas and activities utilized as a part of previous operational range activities. Additionally, the range will remain subject to all other requirements of this permit.

Draft

PART VI

SOLID WASTE MANAGEMENT UNIT IDENTIFICATION AND EVALUATION

VI.A. APPLICABILITY

The Conditions of this Part apply to:

1. The solid waste management units (SWMUs) and areas of concern (AOCs) identified in Table VI.1;

2. The SWMUs/AOCs identified in Table VI.2, which require investigation and/or remediation;

3. The SWMUs/AOCs identified in Table VI.3, which require no further investigation under this permit at this time;

4. The SWMUs/AOCs identified in Table VI.4, which are regulated by Parts I-III and VI of this permit;

5. The SWMUs/AOCs identified in Table VI.5, which require Interim Measures and/or Source Removal;

6. The SWMUs/AOCs identified in Table VI.6, which require a Corrective Measures Implementation (CMI) Plan.

7. Any additional SWMUs or AOCs discovered during the course of groundwater monitoring, field investigations, environmental audits, or other means; and,

8. Contamination beyond the facility boundary, if applicable. The Permittee shall implement corrective actions beyond the facility boundary where necessary to protect human health and the environment, unless the Permittee demonstrates to the satisfaction of the Department that, despite the Permittee's best efforts, as determined by the Department, the Permittee was unable to obtain the necessary permission to undertake such actions. The Permittee is not relieved of all responsibility to clean up a release that has migrated beyond the facility boundary where off-site access is denied. On-site measures to address such releases will be determined on a case-by-case basis. Assurances of financial responsibility for completion of such off-site corrective action will be required.

VI.B. NOTIFICATION AND ASSESSMENT REQUIREMENTS FOR NEWLY IDENTIFIED SWMUs AND AOCs

1. The Permittee shall notify the Department in writing, within 15 calendar days of discovery, of any additional AOC(s) as described under Permit Condition VI.A.7. The notification shall include, at a minimum, the location of the AOC(s) and all available information pertaining to the nature of the release (*e.g.*, media affected, hazardous

Draft

constituents released, magnitude of release, *etc.*). If the Department determines that further investigation of an AOC is required, the permit will be modified in accordance with ADEM Admin. Code Rule 335-14-8-.04(2).

2. The Permittee shall notify the Department in writing, within 15 calendar days of discovery, of any additional SWMUs as described under Permit Condition VI.A.7.

3. The Permittee shall prepare and submit to the Department, within 90 calendar days of notification, a SWMU Assessment Report (SAR) for each SWMU identified under Permit Condition VI.B.2. At a minimum, the SAR shall provide the following information:

   a. Location of unit(s) on a topographic map of appropriate scale such as required under ADEM Admin. Code Rule 335-14-8-.02(5)(b)19.

   b. Designation of type and function of unit(s).

   c. General dimensions, capacities and structural description of unit(s) (supply any available plans/drawings).

   d. Dates that the unit(s) were operated.

   e. Specification of all wastes that have been managed at/in the unit(s) to the extent available. Include any available data on hazardous constituents in the wastes.

   f. All available information pertaining to any release of hazardous waste or hazardous constituents from such unit(s) (to include groundwater data, soil analyses, air, and/or surface water data).

4. Based upon the results of the SAR, the Department shall determine the need for further investigations at the SWMUs covered in the SAR. If the Department determines that such investigations are needed, the Permittee shall initiate an investigation as outlined in Permit Condition VI.D.1 immediately upon receiving notification of the Department's determination.

VI.C. NOTIFICATION REQUIREMENTS FOR NEWLY DISCOVERED RELEASES AT PREVIOUSLY IDENTIFIED SWMUs or AOCs

1. The Permittee shall notify the Department in writing of any newly discovered release(s) of hazardous waste or hazardous constituents discovered during the course of groundwater monitoring, field investigations, environmental audits, or other means, within 15 calendar days of discovery. Such newly discovered releases may be from SWMUs or AOCs identified in Permit Condition VI.A.3 or SWMUs or AOCs identified in Permit Condition VI.A.7 for which further investigation was not required.

2. If the Department determines that further investigation of the SWMUs or AOCs is needed, the Permittee shall initiate an investigation as outlined in Permit Condition VI.D. immediately upon receiving notification of the Department's determination.

Draft

VI.D. RCRA FACILITY INVESTIGATION (RFI)

1. The Permittee must perform a RCRA Facility Investigation (RFI) for any SWMU and AOC identified by the Department in accordance with Permit Conditions VI.A.2, VI.B.4, and VI.C.2.

2. The RFI must completely identify the concentration of hazardous constituents released from each SWMU and AOC and fully delineate the area where such hazardous constituents have come to be located.

3. The RFI must fully characterize the nature and extent of contamination released from each SWMU or AOC under investigation.

4. The RFI must be performed in a manner consistent with the most recent edition of the Alabama Environmental Investigation and Remediation Guidance.

5. Except as provided by Permit Condition VI.D.6., the RFI must be completed within 180 calendar days from the effective date of this permit or, for SWMUs or AOCs identified pursuant to Permit Condition VI.B. and C., within 180 calendar days from the receipt of notification from the Department that an RFI is required. If, prior to the effective date of this permit, the Department has approved a work plan that includes a schedule for completing the RFI, the RFI shall be completed in accordance with the approved schedule.

6. RFI Schedule of Compliance

   a. For RFIs expected to require greater than 180 calendar days to complete, the Permittee may submit a schedule of compliance subject to Departmental approval and/or modification.

   b. Submittal of an RFI Schedule of Compliance does not delay or otherwise postpone the Permittee's obligation to initiate the RFI.

   c. The Schedule of Compliance must include:

      i. A detailed narrative discussion, which explains why the RFI cannot be completed within 180 days; and,

      ii. A detailed and chronological listing of milestones with estimated durations that provides sufficient information to track the progress of the investigation.

   d. The RFI Schedule of Compliance shall be reviewed by the Department in accordance with Permit Condition VI.G.

   e. The Permittee shall complete the RFI in accordance with the approved RFI Schedule of Compliance.

Draft

7. RFI Progress Reports

a. For an RFI being conducted in accordance with the approved RFI Schedule of Compliance, the Permittee must submit progress reports on a monthly basis.

b. The RFI Progress Reports must include:

i. A description of the RFI activities completed during the reporting period;

ii. Summaries of any problems or potential problems encountered during the reporting period;

iii. Actions taken to rectify problems;

iv. Changes in relevant personnel;

v. Projected work for the next reporting period;

vi. Any proposed revisions to the RFI Schedule of Compliance. Modifications of the RFI Schedule of Compliance are subject to approval by the Department; and,

vii. A summary of any data collected during the reporting period, including:

A. The location of each sampling point identified on a site map;

B. The concentration of each hazardous constituent detected at each sampling point; and,

C. Submittal of RFI Progress Reports, work plans, or other documents during the RFI does not alter the approved RFI Schedule of Compliance.

8. RFI Reports

a. The Permittee shall prepare and submit to the Department an RFI Report within 60 calendar days from the completion of investigation activities in accordance with the approved RFI Schedule of Compliance, if applicable.

b. The RFI Report must provide a detailed description of all required elements of the investigation as described in the most recent edition of the Alabama Environmental Investigation and Remediation Guidance.

c. The RFI Report shall be reviewed by the Department in accordance with Permit Condition VI.G.

Draft

VI.E. SELECTION OF CORRECTIVE MEASURES AND PERMIT MODIFICATION

1. The Permittee shall develop and submit to the Department a Corrective Measures Implementation (CMI) Plan for any areas of the Permittee's site where hazardous constituents have come to be located at concentrations exceeding those appropriate for the protection of human health and the environment. The CMI Plan must include all applicable elements of the proposed remedy pursuant to the most recent edition of the Alabama Environmental Investigation and Remediation Guidance.

2. The CMI Plan shall be submitted to the Department within 120 calendar days following the Permittee's submittal of the RFI Report indicating that hazardous constituents have come to be located at any area of the Permittee's facility, or beyond the facility, at concentrations exceeding those appropriate for the protection of human health and the environment, or within 120 calendar days following notification from the Department that a CMI Plan is required, whichever occurs earlier.

3. The CMI Plan shall be submitted along with a request for permit modification pursuant to ADEM Admin. Code R. 335-14-8-.04(2), and shall include any applicable fees pursuant to ADEM Admin. Code R. 335-1-6. This modification will serve to incorporate the proposed final remedy, including all procedures necessary to implement and monitor the remedy, into this permit.

4. The CMI Work Plan shall be submitted for the SWMUs/AOCs listed in Table VI.6 within 120 days from permit issuance.

VI.F. INTERIM MEASURES (IM)

1. IM Work Plan(s)

   a. Upon notification by the Department, the Permittee shall prepare and submit an Interim Measures (IM) Work Plan for any SWMU or AOC that the Department determines is necessary. IM are necessary in order to minimize or prevent further migration of contaminants and limit human and environmental exposure to contaminants while long-term corrective measures are evaluated and, if necessary, implemented. The IM Work Plan shall be submitted within 30 calendar days of such notification and shall include the elements listed in Permit Condition VI.F.1.b. Such IM may be conducted concurrently with investigations required under the terms of this permit. The Permittee may initiate IM by submitting an IM Work Plan for approval and reporting in accordance with the requirements under Permit Condition VI.F.

   b. The IM Work Plan shall ensure that the IM are designed to mitigate any current or potential threat(s) to human health or the environment and is consistent with and integrated into any long-term solution at the facility. The IM Work Plan shall include: the IM objectives, procedures for implementation (including any designs, plans, or specifications), and schedules for implementation.

Draft

c. The IM Work Plan must be approved by the Department, in writing, prior to implementation. The Department shall specify the start date of the IM Work Plan schedule in the letter approving the IM Work Plan.

d. The IM Report shall be reviewed by the Department in accordance with Permit Condition VI.G.

e. The Permittee shall submit IM WPs for the SWMUs and AOCs listed in Table VI.5 of this permit to the Department for review and approval. The IM WPs shall be submitted within 180 days from the effective date of this permit.

2. IM Implementation

a. The Permittee shall implement the IM in accordance with the approved IM Work Plan.

b. The Permittee shall give notice to the Department as soon as possible of any planned changes, reductions or additions to the IM Work Plan.

c. Final approval of corrective action required under ADEM Admin. Code Rule 335-14-5-.06(12), which is achieved through IM, shall be in accordance with ADEM Admin. Code Rule 335-14-8-.04(2) and Permit Condition VI.E.

3. IM Reports

a. If the time required for completion of IM is greater than one year, the Permittee shall provide the Department with Progress Reports at intervals specified in the approved work plan. The Progress Reports shall, at a minimum, contain the following information:

i. A description of the portion of the IM completed;

ii. Summaries of any deviations from the IM Work Plan during the reporting period;

iii. Summaries of any problems or potential problems encountered during the reporting period;

iv. Projected work for the next reporting period; and,

v. Copies of laboratory/monitoring data.

b. The Permittee shall prepare and submit the IM Report to the Department within 90 calendar days of completion of IM conducted under Permit Condition VI.F. The IM Report shall, at a minimum, contain the following information:

i. A description of IM implemented;

ii. Summaries of results;

Draft

iii. Summaries of all problems encountered;

iv. Summaries of accomplishments and/or effectiveness of IM; and,

v. Copies of all relevant laboratory or monitoring data, *etc.*, in accordance with Permit Condition I.C.10.

VI.G. SUBMITTALS

1. All work plans, reports, schedules, and other documents ("submittals") required by this permit shall be subject to approval by the Department to assure that such submittals and schedules are consistent with the requirements of this Permit and with applicable regulations and guidance. The Permittee shall revise all submittals and schedules as directed by the Department.

2. The Department will review all submittals in accordance with the conditions of this permit. The Department will notify the Permittee in writing of any submittal that is disapproved, and the basis therefore. If the Department disapproves a submittal, the Department shall: (1) notify the Permittee in writing of the submittal's deficiencies and specify a due date for submission of a revised submittal, (2) revise the submittal and notify the Permittee of the revisions, or (3) conditionally approve the submittal and notify the Permittee of the conditions. Permit Condition VI.H. shall apply only to submittals that have been disapproved and revised by the Department, or that have been disapproved by the Department, then revised and resubmitted by the Permittee, and again disapproved by the Department.

3. All submittals shall be submitted within the time frame specified by the Department and in accordance with the approved schedule of compliance. Extensions of the due date for submittals may be granted by the Department based on the Permittee's demonstration that sufficient justification for the extension exists.

4. All submittals required by this permit shall be signed and certified in accordance with ADEM Admin. Code Rule 335-14-8-.02(2).

5. Two (2) copies of all submittals shall be provided by the Permittee to the Department in accordance with Permit Condition I.K.

VI.H. DISPUTE RESOLUTION

Notwithstanding any other provision in this permit, in the event the Permittee disagrees, in whole or in part, with the Department's revision of a submittal or disapproval of any revised submittal required by this Part, the following may, at the Permittee's discretion, apply:

1. In the event that the Permittee chooses to invoke the provisions of this section, the Permittee shall notify the Department in writing within 30 calendar days of receipt of the Department's revision of a submittal or disapproval of a revised submittal. Such notice shall set forth:

   a. The specific matters in dispute;

Draft

b. The position the Permittee asserts should be adopted as consistent with the requirements of this permit;

c. The basis for the Permittee's position; and,

d. Any matters considered necessary for the Department's determination.

2. The Department and the Permittee shall have additional 30 calendar days from the Department's receipt of the notification provided for in Permit Condition VI.H.1. to meet or confer to resolve any disagreement.

3. In the event agreement is reached, the Permittee shall submit and implement the revised submittal in accordance with and within the time frame specified in such agreement.

4. If agreement is not reached within the 30-day period, the Department will notify the Permittee in writing of his/her decision on the dispute, and the Permittee shall comply with the terms and conditions of the Department's decision in the dispute. For the purposes of this provision in this permit, the responsibility for making this decision shall not be delegated below the Land Division Chief.

5. With the exception of those conditions under dispute, the Permittee shall proceed to take any action required by those portions of the submission and of this permit that the Department determines are not affected by the dispute.

Draft

Table VI.1

The following Solid Waste Management Unit(s) (SWMU) and/or Area(s) of Concern (AOC) numbers and descriptions correspond with those noted in the RCRA Facility Assessment (RFA) Report. Where discrepancies exist, the permit will take precedence.

It should be noted that as used in Table VI.1, VI.2, VI.3, VI.4, VI.5, VI.6, and VIII.1, the SWMU/AOC number is RSA - ### except where specifically noted otherwise (e.g., MSFC - ###).

Master List of known SWMUs/AOCs at the facility:

SWMU/AOC NUMBER	SWMU/AOC NAME	UNIT COMMENT
001	Fox Army Community Hospital Incinerator	
002	In-ground Oil/Water Separator, Bldg 3338	
003	In-ground Oil/Water Separator, Bldg 3617	
004	In-ground Oil/Water Separator & Washrack	
005	Inactive Waste Accumulation Area	
006	Paint Shop & Sump at Motor Pool, Bldg 3634	
007	Hazardous Waste Storage Area, Bldg 3775	
008	Inactive Sewage Treatment Plant #4	
009	Inactive Sewage Treatment Plant #3	
010	Closed Sanitary Landfill	
011	Former Sewage Treatment Plant No. 1	
012	Active Open Burn Pans, Unit 2 (OB)	
013	Unlined Inactive Open Burn Pad	
014	Unlined Inactive Burn Trenches Unit #2	
015	Hazardous Waste Storage Igloo, No. 1 (8621)	
016	Hazardous Waste Storage Igloo, No. 2 (8622)	
017	Hazardous Waste Storage Igloo, No. 3 (8623)	
018	Hazardous Waste Storage Igloo, No. 4 (8624)	
019	Hazardous Waste Storage Igloo, No. 5 (8625)	
020	Hazardous Waste Storage Igloo, No. 6 (8630)	
021	Hazardous Waste Storage Igloo, No. 7 (8631)	
022	Hazardous Waste Storage Igloo, No. 8 (8632)	
023	Hazardous Waste Storage Igloo, No. 9 (8633)	
024	Hazardous Waste Storage Igloo No. 10	
025	Hazardous Waste Vacant Storage Igloo No. 11	
026	Hazardous Waste Vacant Storage Igloo No. 12	
027	Hazardous Waste Vacant Storage Igloo No. 13	
028	In-ground Oil/Water Separator, 5693 Area	
029	Redstone Arsenal Sanitary Sewer System	
030	Former Central Oil/Water Separator	
031	Former Central Oil/Water Separator Storage Tanks	
032	Inactive Scrap Metal Storage Area	
033	Plating Room Floor Drains, Bldg 5432	
034	Waste Aviation Fuel Temporary Storage Area	
035	In-ground Oil/Water Separator, Bldg 4812	

Draft

Table VI.1 (cont'd)

SWMU/AOC NUMBER	SWMU/AOC NAME	UNIT COMMENT
036	In-ground Oil/Water Separator, Bldg 4832	
037	Underground Used Oil Storage Tank at Bldg 7857	
038	Underground Used Oil Storage Tank Bldg 3240	
039	Underground Used Oil Storage Tank Bldg 3338	
040	Underground Used Oil Storage Tank Bldg 3617	
041	Underground Used Oil Storage Tank Bldg 3636	
042	Underground Used Oil Storage Tank Bldg 4812E	
043	Underground Used Oil Storage Tank Bldg 5435A	
044	Underground Used Oil Storage Tank Bldg 5435B	
045	Smoke Munitions Plant 3	
046	Inactive Chemical Munition Test Site, Area CC	
047	Chemical Training Facility, Area EE	
048	Inactive Sanitary Landfill, Area G	
049	Capped Arsenic Waste Lagoons – West, Area F	
050	Inactive Munitions Demil/Disposal Area H	
051	Inactive Munitions Demil/Disposal Area I	
052	Inactive Munitions Demil/Disposal Area N	
053	Inactive Sanitary & Industrial Landfill, Area Q3	
054	Inactive Sanitary & Industrial Landfill, Area T	
055	Inactive Sanitary & Industrial Landfill, Area S	
056	Closed Arsenic Waste Ponds (South) Area U	
057	Former Lewisite Drum Storage Yard, Area V	
058	Inactive Rubble Fill/Waste Pile, Area W	
059	Inactive Construction Rubble Fill, Area R	
060	Inactive Sanitary & Industrial Landfill, Area Q4	
061	Inactive Munitions Demil/Disposal, Area P	
062	Inactive Munitions Demil	
063	Inactive Chemical Munitions Disposal, Area M	
064	Inactive Munitions Demil/Disposal Area BB	
065	Former Chemical Drum Storage Area, Area X	
066	Inactive Ash Disposal Site, Area X-1	
067	Former Chemical Drum Storage Area, Area AA	
068	Inactive Chemical Disposal Area, Area Z	
069	Former Chemical Drum Storage Area, Area Y	
070	Inactive Toxic Chemical Storage Area, Area Y1	
071	High Explosive Drop Test Site, Area A	
072	Mortar Shell Test Site, Area B	
073	High Explosive Impact Test Site, Area C	
074	High Explosive Impact Test Site, Area D	
075	Inactive Solid Waste Incinerator	
076	RDX/HMX Filtration Unit 1, Thiokol North	
077	RDX/HMX Filtration Unit 2, Thiokol South	
078	RDX/HMX Filtration Unit 1 Sump, Thiokol North	
079	RDX/HMX Filtration Unit 2 Sump, Thiokol South	

Draft

Table VI. 1 (cont'd)

SWMU/AOC NUMBER	SWMU/AOC NAME	UNIT COMMENT
080	RDX/HMX Suspension Transfer Pad/Sump	
081	RDX/HMX Filtration Units, Charcoal Column Dolly	
082	Former Sparging Unit, Bldg 7595	
083	Paint Spray Booth Sump, Bldg 7344	
084	Inactive Temporary Waste Storage Pad, Bldg 7344	
085	Inactive Temporary Waste Storage Pad 1, Bldg 7359	
086	Inactive Temporary Waste Storage Pad 2, Bldg 7359	
087	Inactive Temporary Waste Storage Pad 1&2, Bldg 7368	
088	Inactive Temporary Waste Storage Pad, Bldg 7625	
089	Inactive Temporary Waste Storage Pad, Bldg 7726	
090	Inactive Temporary Waste Storage Pad, Bldg 7340	
091	Inactive Temporary Waste Storage Pad, Bldg 7595	
092	Temporary Waste Storage Pad, Bldg 7552	
093	Reclaimed Empty Drum Storage Pad, Bldg 7368	
094	Chlorinated Solvent Distillation Unit 1, Bldg 7625	
095	Chlorinated Solvent Distillation Unit 2, Bldg 7368	
096	Chlorinated Solvent Distillation Unit 3, Bldg 7740	
097	Chlorinated Solvent Distillation Unit 4, Bldg 7726	
098	Chlorinated Solvent Distillation Unit 5, Bldg 7346	
099	Abandoned Plating Shop Tank/Sumps, Bldg 7614	
100	Aboveground Waste Oil Tank, Bldg 7630	
101[a]	DDT Contaminated Area DD	
102	DDT Plant Site Q-6	
103	DDT Settling Lagoon	
104	Inactive ISP Wastewater Discharge Ditch	
105	DDT Drainage Ditches	
106	DDT Earthen Dams	
107	Closed DDT Soil/Debris Landfill	
108	Test Range 4 Missile Impact Site	
109	Former Chemical Munitions Staging Area	
110	Former Drum Storage/Construction Debris, Area Y	
111	Construction Debris, Area W	
112	Suspected Former Demil/Disposal, Area W	
113	Inactive Disposal Trenches/Burn Pits, Area W	
114	Inactive Madkin Mt Rock Quarry	
115	Inactive East Side Blowdown Lagoon, Test Area 5	
116	South Side Blowdown Lagoon, Test Area 5	
117	Former Liquid Caustic Mfg Plant, Area R	

Draft

Table VI.1 (cont'd)

SWMU/AOC NUMBER	SWMU/AOC NAME	UNIT COMMENT
118	Inactive ISP Industrial Discharge Lagoon	
119[b]	GAF Manufacturing Facility	
120	Matthew's Cave and Ravine	
121	Paint Shop/Paint Washout Booth, Bldg 4762	
122	Dismantled Lewisite Mfg. Plant, Area U	
123	Inactive Cement Plant Sump	
124	Dismantled Calgon DDT Contaminated Water Treatment Plant	
125	Satellite Waste Accumulation Area, Bldg 5477	
126	Inactive Open Burn Trench, Area U	
127	Photo Lab Process Wastewater Sump Bldg 5451	
128	Inactive Mustard Gas Demil Area, Area W	
129	Thiokol Burning Pit/Rocket Washout Area	
130	Inactive Radiographic Septic Tank, Bldg 7345	
131	Active Open Detonation Area (OD)	
132	Dismantled Popping Furnace	
133	Inactive Rocket Washrack/Sump, Unit 2	
134	Inactive Disposal Trench/Burn Pit, Area U	
135 A-G, I-N	1.1 Propellant Waste Captive Sumps	
135 H	1.1 Propellant Waste Captive Sump, Bldg 7593	
136 A-J	1.1 Propellant Waste Drum Storage Pads	
137 A-L, N-P	1.3 Propellant Waste Sumps	
138 A-L, N-Q	1.3 Propellant Waste Drum Storage Pads	
138 M	ROP Tetryl Processing Line	
139	Closed Arsenic Waste Pond (North) Area U	
140	Inactive Disposal Area near T/S Tower	
141	4.2-inch Mortar Disposal Site, Bldg 4656	
142	TCE Spill by Thiokol Degreasing Process	
143	Petroleum Contaminated Soil Site, South of Bldg 3240	
144	Degreaser at Bldg 7554	
145	GW Northeast part of RSA (~9900 acres)	
146	GW Southeast part of RSA, underlies former Thiokol Plant (~6600 acres)	
147	GW Central part of RSA (~1300 acres)	
148	GW Central Area – East of MSFC (~3600 acres)	
149	GW West Central Area – West MSFC (~3900 acres)	
150	GW Western part of RSA (~3900 acres)	
151	GW Southern part of RSA, underlies OB/OD Area (~570 acres)	
152	GW Southern part of RSA, underlies GCWD (~570 acres)	

Draft

Table VI. 1 (cont'd)

SWMU/AOC NUMBER	SWMU/AOC NAME	UNIT COMMENT
153	GW Western edge of RSA (~6300 acres)	
154	GW South-Central part of RSA (~3300 acres)	
155	GW Southwestern area of RSA (1600 acres)	
156	GW Southern part of RSA (~1400 acres)	
157	GW Southeastern part of RSA, underlies GCWD Storage Area (~100 acres)	
158	Flammable Material Storage Bldg, TSA Bldg 3233	
159	Chemical Containment Storage, TSA Bldg 3327	
160	Mixer Bldg, TSA Bldg 7339	
161	Care Prep Bldg, TSA Bldg 7346	
162	Small Motor Loading "T", TSA Bldg 7347A	
163	Propellant Mixer, TSA Bldg 7353	
164	Mixer Bldg, TSA Bldg 7356	
165	Casting Bldg, TSA Bldg 7360	
166	Liner Preparation, TSA Bldg 7369	
167	Mixer Bldg, TSA Bldg 7382	
168	Motor Casting and Processing Bldg, TSA Bldg 7554	
169	Motor Assembly and Packout, TSA Bldg 7555	
170	Deaeration Cleanup, TSA Bldg 7593	
171	Propellant Mixing, TSA Bldg 7594	
172	Motor Pool, TSA Bldg 7630	
173	Chemistry Lab, Pad 1, TSA Bldg 7632	
174	Chemistry Lab, Pad 2, TSA Bldg 7632	
175	Physical Property Lab, Pad 1, TSA Bldg 7636	
176	Physical Property Lad, Pad 2, TSA Bldg 7636	
177	Small Motor Finishing, TSA Bldg 7654	
178	Control Lab and First Aid, Pad 1, TSA Bldg 7667	
179	Control Lab and First Aid, Pad 2, TSA Bldg 7667	
180	Nitramine Drying Pilot, TSA Bldg 7688	
181	Nitramine Grinding Pilot, TSA Bldg 7690	
182	1.1 Grinder Bldg "P2", TSA Bldg 7695	
183	Former Lewisite Manufacturing Lines 1 & 2	
187	Northern Thiokol Propellant Mixing Facility	
188	Northern Burial Area/Burning Ground #3	
189	Motor/Oxidizer Preparation Facilities, ROP Line 2 Area	
190	Disposal/Drainage Area West of ROP Line 2	
191	ROP Line 1 Service Facilities	
192	Tetryl and Igniter Processing, ROP Line 1 Area	
193	Igniter Preparation Facility	
194	Physical Test Laboratory and Storage Facilities	

Draft

Table VI. 1 (cont'd)

SWMU/AOC NUMBER	SWMU/AOC NAME	UNIT COMMENT
195	Propellant Mixing Facility #1, Bldg 7363	
196	Test Stand and Cleaning Bldg, Bldg 7373	
197	Rocket Motor Static Test Stand	
198	Equipment/Tool Cleaning Facility, Bldg 7359	
199	Propellant Mixing Facility #2, Bldg 7382	
200	ROP Line 5 Area Operations Facilities	
201	Research Laboratory, Bldg 7632	
202	Graded Area Northeast of ROP Storage Igloos	
203	Igloo Area Loading Dock, Bldg 7351	
204	Oxidizer Facility, Bldg 7691	
205	Photo Lab and Motor Service Facility, Former Bldg 7628	
206	Propellant Mixing Facility #2 and Casting Facility, Bldg 7339/40	
207	Gorgas Laboratory, Bldg 7770	
208	South Plant Testing Facilities	
209	Propellant Crushing/Grinding and Fuse Production	
210	Nitroglycerine Wash House	
211	South Plant Storage Magazines	
212	Propellant Dry Houses	
213	ROP Line 4 Area Operations Facilities	
214	ROP Line 6 Area Operations Facilities	
215	RSA-146 Historic Service Facilities	
216	Laboratory Injection Test Facility, Bldg 5475	
217	Inert Storage Warehouse Facilities	
218	Defense Reutilization Material Office (DRMO) Open Storage Area	
219	Chemical Storage Area in Salvage Yard	
220	Construction Material Storage Yard	
221	Fuse Storage and Munitions Disposal Area	
222	Roads and Grounds Maintenance Shop, Bldg 5494	
223	Central Railroad Classification Yard	
224	Container Storage Area	
225	Fuse Modification Line 7	
226	Open Storage 54-2	
227	Inactive Washrack (adjacent to Bldg 5492)	
228	Sewage Treatment Plant 2	
229	Former PX Service Station (Bldg 3197)	
230	Abandoned Rubble Pile	
231	SMF #1 Mixing& Prep Facilities	
232	SMF #1 Service Station	
233	SMF #2 Mixing & Prep Facilities	
234	Waste Disposal Pit	

Draft

Table VI. 1 (cont'd)

SWMU/AOC NUMBER	SWMU/AOC NAME	UNIT COMMENT
235	Bulk Fuel Storage Facility	
236	Grenade Packing & Assembly	
237	Propellant Cutting and Drying	
238	Plant 2, Mustard Lines 5 and 6	
239	ROP Line #1 Boiler House	
240	Substation No.7, Formerly Bldg 5290 (demolished)	
241	Hazardous Waste Storage Igloo, Bldg 7313	
242	Hazardous Waste Storage Igloo, Bldg 7314	
243	Propellant Storage, Bldg 7342	
244	Propellant Mixing Bldg, Bldg 7356	
245	Steam Heating Plant, Bldg 7579	
246	Sewer Ejector & Motor Pool, Bldg 7630	
247	Steel Fabrication/Maintenance Facility, Bldg 7644	
248	Battery Maintenance Shop, Bldg 3633	
249	Inactive Old Bone Yard Disposal Site 2	
250	Former Storage Warehouse, Bldg 778/5678	
251	Former Phosgene Plant	
252	Incendiary Bomb Facility Plant 2 Area	
253	Utility/Flammable Materials Storage (B6109)	
254	Range 1 Bombing Targets	
255	Coal/Manganese Ore Storage Area N. of RSA-065	
256	Scarred Area #2-NE of RSA-032 w/in Historic RR Spur Line	
257	Rock Pond	
258	Guard Shack Waiting Shelter/Paint Spray, Bldg 7862	
259	TA #2 Leach Field	
260	Test Stand C, TA#2 Bldg 7843	
261	Lance Missile Conditioning Facility, Bldg 7847	
262	CWS Warehouse Area (Bldgs 8021, 8022, 8023, 8024, 8025, 8026, and 8027)	
263	CWS Motor Pool (Bldg 8017)/Change House (Bldg 8020)	
264	RR Spring	
265	Gasoline Drum Storage Area	
266	Gulf Chemical Depot Storage Magazines	
267	Drainage Ditch #4	
268	Sewage Treatment Plant, Bldg 8018	
269	Former UST, Bldg 7852	
270	Hazardous Waste TSA & Recycling Facility Bldg 5423	

Draft

Table VI. 1 (cont'd)

SWMU/AOC NUMBER	SWMU/AOC NAME	UNIT COMMENT
271	Former Boiler House, Bldg 7729	
272	Former UST for Boiler Unit, Bldg 7650	
273	Propellant Conditioning & Motor Cycling, Bldg 7364	
274	Physics Laboratory & High Explosives Storage Magazine, Bldg 7540	
275	Film Processing Laboratory, Former Bldg S-7173	
276	Former Boiler House, Bldg 7362	
277	Bldg 5487, Wastewater Maintenance Shop Acid Bath Wash Down Area	
278	Highway 565 Area	
279	Smoke Grenade Area	
280	Skunk Hollow Small Arms Range	
281	Disposal Trenches at RSA-046 Range	
282	Former Mortar Test Site (Not in Range)	
283	Former Primary Substation No. 2 Bldg 3796	
284	Fire Training Area	
285	Former WP Grenade Test Area	
286	Boiler/Steam Plant, Bldg 3624	
287	Component Storage Warehouse, Bldg 3634	
288	Drinking WTP#1, Sludge Thickener & Drying Beds, Bldgs 8043 & 8044	
289	Drinking WTP#2, Sludge Thickener (Bldg 9102) & Sludge Drying Beds	
290	Drinking WTP#3, Sludge Thickener & Drying Beds, Bldgs 5431 & 5433	
291	UST at Former Bldg T-3162 (Steam Plant)	
292	UST at Bldg 3311 (Boiler & Compressor House)	
293	Former USTs at Bldg 3639 (Screening & Proportioning Smoke Components Bldg)	
294	Field Training Exercise Area E	
295	Hazardous Waste TSA, Bldg S-3335	
296	Disposal Area North of RSA-011	
297	Ammunition Packing/Shipping, Bldg 7551	
298	Hazardous Waste TSA, Bldg 8408	
299	Hazardous Waste TSA, Bldg 7216	
300	Hazardous Waste TSA, Bldg 7172	
301	Hazardous Waste TSA, Bldg 7173	
302	Hazardous Waste TSA, Bldg 3802	
303	Hazardous Waste TSA, Bldg 7700	
304	OWS, Washrack & Sump, adjacent to Bldg 5498	
305	Dispatcher's Office with Washrack, Bldg 3664	
306	Steam Heating Plant, Bldg 7291	

Draft

Table VI. 1 (cont'd)

SWMU/AOC NUMBER	SWMU/AOC NAME	UNIT COMMENT
307	Hazardous Waste TSAs B and C, Bldg 7347	
308	Exterior Sump at Bldg 7120	
309	Covered Trench & Sump at Bldg 7155	
310	Former OWS & Suspected OWS at Bldg 7289	
311	Exterior Sump & Interior Concrete Pits at Bldg 7352	
312	Former Range Area for Gate 7 Expansion	
313	Western Side of Former High Explosive Drop Area A	
314	Used Oil AST & Spill Site, Bldg 3670	
315	Abandoned Drum Area near the Golf Course	
316	7500 Area Hardstand Parking	
317	Construction Site East of Building 5674 off Technology Road	
318	Smoke Pot Disposal Area	
319	Former Oil/Water Separator, Bldg 4812 & Pad	
320	Parking/Equipment Staging Area	
321	Cleared Area East and Northeast of Bldg 3639	
322	Hazardous Waste Storage Igloo, Bldg 8205	
323	Hazardous Waste Storage Igloo, Bldg 8208	
324	Hazardous Waste Storage Igloo, Bldg 8209	
325	Hazardous Waste Storage Igloo, Bldg 8210	
326	Hazardous Waste Storage Igloo, Bldg 8211	
327	Hazardous Waste Storage Igloo, Bldg 8212	
328	Hazardous Waste Storage Igloo, Bldg 8213	
329	Hazardous Waste Storage Igloo, Bldg 8214	
330	Hazardous Waste Storage Igloo, Bldg 8216	
331	Hazardous Waste Storage Igloo, Bldg 8217	
332	Hazardous Waste Storage Igloo, Bldg 8218	
333	Hazardous Waste Storage Igloo, Bldg 8219	
334	Hazardous Waste Storage Igloo, Bldg 8220	
335	Hazardous Waste Storage Igloo, Bldg 8221	
336	Hazardous Waste Storage Igloo, Bldg 8222	
337	Hazardous Waste Storage Igloo, Bldg 8223	
338	Hazardous Waste Storage Igloo, Bldg 8224	
339	Hazardous Waste Storage Igloo, Bldg 8225	
340	Hazardous Waste Storage Igloo, Bldg 8226	
341	Hazardous Waste Storage Igloo, Bldg 8227	
342	Hazardous Waste Storage Igloo, Bldg 8228	
343	Hazardous Waste Storage Igloo, Bldg 8229	
344	Hazardous Waste Storage Igloo, Bldg 8230	
345	Hazardous Waste Storage Igloo, Bldg 8231	
A	Inactive Propellant Storage Wells South	
B	Abandoned Army Propellant Mfg Bldg 7598	

Draft

Table VI. 1 (cont'd)

SWMU/AOC NUMBER	SWMU/AOC NAME	UNIT COMMENT
C	Abandoned Army Propellant Mixing Bldg 7596	
D	Paint Storage Shed, Bldg 3547	
E	No. 2 Fuel Oil Spill, Tank 5693 at the Fuel Farm	
F	Fenced Open Storage/Laydown Yard	
MSFC-002/087	Inactive Abandoned Drum Disposal Site/Inactive Cyanide Lagoon	
MSFC-003	Inactive Old Bone Yard Disposal Site #1	
MSFC-027	Inactive (M-1) Waste Accumulation Area	
MSFC-033*	SWAA Bldg 4815	
MSFC-033A	Surface Soils East of Building 4816 Adjacent to MSFC-033	
MSFC-034	Former Chemical Production Area	
MSFC-035	Inactive Sump/Tiled Drain Field – East TA	
MSFC-043*	Waste Oil Trap for Bldg 4816	
MSFC-052E	Portion of Industrial Sewer East of MSFC Property	
MSFC-053	Former Propellant Storage Area and Test Stand Site	
MSFC-055	Dismantled Stauffer Chemical Mfg Plant	
MSFC-060	Drainage System for Historic Redstone Test Site	
MSFC-065	1800-Ft Surface Drainage D itch/Area	
MSFC-068*	Bldg 4815 Surface Drainage Area	
MSFC-074	Inactive Disposal Site, East Test Area	
MSFC-077	Former Burning Pits	
MSFC-082	Former Mustard Gas Demil Site and Mustard Shell Disposal Trenches	
MSFC-D	Containment Area for Tanks 4234 A, B & C	
IOU-1	Huntsville Spring Branch East of McDonald Creek	
IOU-2	Huntsville Spring Branch East of Patton Road	
IOU-3	Huntsville Spring Branch Patton Road through Olin	
IOU-4	Huntsville Spring Branch, Indian Creek Confluence	
IOU-5	McDonald Creek	
IOU-6	Indian Creek	
IOU-7	Southeastern Boundary System	
IOU-8	McKinley Range	
IOU-9	Southwest Area	
IOU-10	Bradford Sinks	
IOU-11	Tennessee River East	
IOU-12	Tennessee River West	

Note: * Denotes SWMUs/AOCs that are under the control of the MSFC; however, they are located on RSA (Army) Property.

[a] – Denotes SWMUs/AOCs that are covered under the Olin-Triana Consent Decree

[b] – For Generator purposes the SWMU/AOC has its own ID #

Draft

Table VI.2

The following Solid Waste Management Unit(s) (SWMU) and/or Area(s) of Concern (AOC) numbers and descriptions correspond with those noted in the RCRA Facility Assessment (RFA) Report. Where discrepancies exist, the permit will take precedence.

List of SWMUs and AOCs requiring a RCRA Facility Investigation (RFI):

SWMU/AOC NUMBER	SWMU/AOC NAME	UNIT COMMENT
008	Inactive Sewage Treatment Plant #4	
009	Inactive Sewage Treatment Plant #3	
010	Closed Sanitary Landfill	
013	Unlined Inactive Open Burn Pad	
014	Unlined Inactive Burn Trenches Unit #2	
028	In-ground Oil/Water Separator, 5693 Area	
030	Former Central Oil/Water Separator	
031	Former Central Oil/Water Separator Storage Tanks	
032	Inactive Scrap Metal Storage Area	
046	Inactive Chemical Munition Test Site, Area CC	
050	Inactive Munitions Demil/Disposal Area H	
051	Inactive Munitions Demil/Disposal Area I	
052	Inactive Munitions Demil/Disposal Area N	
061	Inactive Munitions Demil/Disposal, Area P	
062	Inactive Munitions Demil	
063	Inactive Chemical Munitions Disposal, Area M	
064	Inactive Munitions Demil/Disposal Area BB	
065	Former Chemical Drum Storage Area, Area X	
066	Inactive Ash Disposal Site, Area X-1	
067	Former Chemical Drum Storage Area, Area AA	
068	Inactive Chemical Disposal Area, Area Z	
069	Former Chemical Drum Storage Area, Area Y	
070	Inactive Toxic Chemical Storage Area, Area Y1	
071	High Explosive Drop Test Site, Area A	
072	Mortar Shell Test Site, Area B	
073	High Explosive Impact Test Site, Area C	
074	High Explosive Impact Test Site, Area D	
104	Inactive ISP Wastewater Discharge Ditch	
109	Former Chemical Munitions Staging Area	
110	Former Drum Storage/Construction Debris, Area Y	
112	Suspected Former Demil/Disposal, Area W	
113	Inactive Disposal Trenches/Burn Pits, Area W	
114	Inactive Madkin Mt. Rock Quarry	
115	Inactive East Side Blowdown Lagoon, Test Area 5	

Draft

Table VI.2 (cont'd)

SWMU/AOC NUMBER	SWMU/AOC NAME	UNIT COMMENT
116	South Side Blowdown Lagoon, Test Area 5	
117	Former Liquid Caustic Mfg. Plant, Area R	
118	Inactive ISP Industrial Discharge Lagoon	
126	Inactive Open Burn Trench, Area U	
128	Inactive Mustard Gas Demil Area, Area W	
129	Thiokol Burning Pit/Rocket Washout Area	
132	Dismantled Popping Furnace	
133	Inactive Rocket Washrack/Sump	
135H	1.1 Propellant Wastes Captive Sump, Bldg 7593	
141	4.2-inch Mortar Disposal Site, Bldg 4656	
143	Petroleum Contaminated Soil Site, S. of Bldg 3240	
145	GW Northeast part of RSA (~9900 acres)	
146	GW Southeast part of RSA, underlies former Thiokol Plant (~6600 acres)	
147	GW Central part of RSA (~1300 acres)	
148	GW Central Area – East of MSFC (~3600 acres)	
149	GW West Central Area – West MSFC (~3900 acres)	
150	GW Western part of RSA (~3900 acres)	
151	GW Southern part of RSA, underlies OB/OD Area (~570 acres)	
152	GW Southern part of RSA, underlies GCWD (~570 acres)	
153	GW Western edge of RSA (~6300 acres)	
154	GW South-Central part of RSA (~3300 acres)	
155	GW Southwestern area of RSA (1600 acres)	
156	GW Southern part of RSA (~1400 acres)	
157	GW Southeastern part of RSA, underlies GCWD Storage Area (~100 acres)	
188	Northern Burial Area/Burning Ground #3	
208	South Plant Testing Facilities	
216	Laboratory Injection Test Facility, Bldg 5475	
217	Inert Storage Warehouse Facilities	
218	Defense Reutilization Material Office (DRMO) Open Storage Area	
219	Chemical Storage Area in Salvage Yard	

Draft

Table VI.2 (cont'd)

SWMU/AOC NUMBER	SWMU/AOC NAME	UNIT COMMENT
221	Fuse Storage and Munitions Disposal Area	
230	Abandoned Rubble Pile	
231	SMF #1 Mixing& Prep Facilities	
234	Waste Disposal Pit	
238	Plant 2, Mustard Lines 5 and 6	
241	Hazardous Waste Storage Igloo, Bldg 7313	
245	Steam Heating Plant, Bldg 7579	
246	Sewer Ejector & Motor Pool, Bldg 7630	
249	Inactive Old Bone Yard Disposal Site 2	
254	Range 1 Bombing Targets	
257	Rock Pond	
260	Test Stand C, TA#2 Bldg 7843	
262	CWS Warehouse Area (Bldgs 8021, 8022, 8023, 8024, 8025, 8026 and 8027)	
264	RR Spring	
266	Gulf Chemical Depot Storage Magazines	
269	Former UST, Bldg 7852	
271	Former Boiler House, Bldg 7729	
278	Highway 565 Area	
281	Disposal Trenches at RSA-046 Range	
282	Former Mortar Test Site (Not in Range)	
283	Former Primary Substation No. 2 Bldg 3796	
284	Fire Training Area	
286	Boiler/Steam Plant, Bldg 3624	
290	Drinking WTP#3, Sludge Thickener & Drying Beds, Bldgs 5431 & 5433	
291	UST at Former Bldg T-3162 (Steam Plant)	
293	Former USTs at Bldg 3639 (Screening & Proportioning Smoke Components Bldg)	

Draft

Table VI.2 (cont'd)

SWMU/AOC NUMBER	SWMU/AOC NAME	UNIT COMMENT
304	OWS, Washrack & Sump, adjacent to Bldg 5498	
308	Exterior Sump at Bldg 7120	
309	Covered Trench & Sump at Bldg 7155	
311	Exterior Sump & Interior Concrete Pits at Bldg 7352	
312	Former Range Area for Gate 7 Expansion	
313	Western Side of Former High Explosive Drop Area A	
314	Used Oil AST & Spill Site, Bldg 3670	
316	7500 Area Hardstand Parking	
317	Construction Site East of Building 5674 off Technology Road	
318	Smoke Pot Disposal Area	
319	Former Oil/Water Separator, Bldg 4812 & Pad	
320	Parking/Equipment Staging Area	
321	Cleared Area East and Northeast of Bldg 3639	
E	No. 2 Fuel Oil Spill, Tank 5693 at the Fuel Farm	
F	Fenced Open Storage/Laydown Yard	
MSFC-003	Inactive Old Bone Yard Disposal Site #1	
MSFC-033*	SWAA Bldg 4815	
MSFC-034	Former Chemical Production Area	
MSFC-035	Inactive Sump/Tiled Drain Field – East TA	
MSFC-043*	Former Waste Oil Trap and Separator (Bldg 4817)	
MSFC-068*	Surface Drainage for Bldg 4815	
MSFC-082	Former Mustard Gas Demil Site and Mustard Shell Disposal Trenches	
IOU-1	Huntsville Spring Branch East of McDonald Creek	
IOU-2	Huntsville Spring Branch East of Patton Road	
IOU-3	Huntsville Spring Branch Patton Road through Olin	
IOU-4	Huntsville Spring Branch, Indian Creek Confluence	
IOU-5	McDonald Creek	
IOU-6	Indian Creek	
IOU-7	Southeastern Boundary System	
IOU-8	McKinley Range	
IOU-9	Southwest Area	
IOU-10	Bradford Sinks	
IOU-11	Tennessee River East	
IOU-12	Tennessee River West	

Note: * Denotes SWMUs/AOCs that are under the control of the MSFC; however, they are located on RSA (Army) Property.

Draft

Table VI.3

The following Solid Waste Management Unit(s) (SWMU) and/or Area(s) of Concern (AOC) numbers and descriptions correspond with those noted in the RCRA Facility Assessment (RFA) Report. Where discrepancies exist, the permit will take precedence.

List of SWMUs and AOCs requiring no further action at this time:

SWMU/AOC NUMBER	SWMU/AOC NAME	UNIT COMMENT
001	Fox Army Community Hospital Incinerator	
002	In-ground Oil/Water Separator, Bldg 3338	
004	In-ground Oil/Water Separator & Washrack	
006	Paint Shop & Sump at Motor Pool, Bldg 3634	
007	Hazardous Waste Storage Area, Bldg 3775	
024	Hazardous Waste Storage Igloo No. 10	
025	Hazardous Waste Vacant Storage Igloo No. 11	
026	Hazardous Waste Vacant Storage Igloo No. 12	
027	Hazardous Waste Vacant Storage Igloo No. 13	
029	Redstone Arsenal Sanitary Sewer System	
033	Plating Room Floor Drains, Bldg 5432	
034	Waste Aviation Fuel Temporary Storage Area	
035	In-ground Oil/Water Separator, Bldg 4812	
036	In-ground Oil/Water Separator, Bldg 4832	
037	Underground Used Oil Storage Tank at Bldg 7857	
038	Underground Used Oil Storage Tank Bldg 3240	
039	Underground Used Oil Storage Tank Bldg 3338	
040	Underground Used Oil Storage Tank Bldg 3617	
041	Underground Used Oil Storage Tank Bldg 3636	
042	Underground Used Oil Storage Tank Bldg 4812E	
043	Underground Used Oil Storage Tank Bldg 5435A	
044	Underground Used Oil Storage Tank Bldg 5435B	
047	Chemical Training Facility, Area EE	
075	Inactive Solid Waste Incinerator	
076	RDX/HMX Filtration Unit 1, Thiokol North	
077	RDX/HMX Filtration Unit 2, Thiokol South	
078	RDX/HMX Filtration Unit 1 Sump, Thiokol North	
079	RDX/HMX Filtration Unit 2 Sump, Thiokol South	
080	RDX/HMX Suspension Transfer Pad/Sump	
081	RDX/HMX Filtration Units, Charcoal Column Dolly	
082	Former Sparging Unit, Bldg 7595	
084	Inactive Temporary Waste Storage Pad, Bldg 7344	
086	Inactive Temporary Waste Storage Pad 2, Bldg 7359	
090	Inactive Temporary Waste Storage Pad, Bldg 7340	
091	Inactive Temporary Waste Storage Pad, Bldg 7595	
099	Abandoned Plating Shop Tank/Sumps, Bldg 7614	

Draft

Table VI.3 (cont'd)

SWMU/AOC NUMBER	SWMU/AOC NAME	UNIT COMMENT
100	Aboveground Waste Oil Tank, Bldg 7630	
102	DDT Plant Site Q-6	
103	DDT Settling Lagoon	
106	DDT Earthen Dams	
107	Closed DDT Soil/Debris Landfill	
108	Test Range 4 Missile Impact Site	
111	Construction Debris, Area W	
119	GAF Manufacturing Facility	
120	Matthew's Cave and Ravine	
121	Paint Shop/Paint Washout Booth, Bldg 4762	
123	Inactive Cement Plant Sump	
124	Dismantled Calgon DDT Contaminated Water Treatment Plant	
125	Satellite Waste Accumulation Area, Bldg 5477	
127	Photo Lab Process Wastewater Sump Bldg 5451	
130	Inactive Radiographic Septic Tank, Bldg 7345	
134	Inactive Disposal Trench/Burn Pit, Area U	
135 A-G, I-N	1.1 Propellant Waste Captive Sumps	
136 A-J	1.1 Propellant Waste Drum Storage Pads	
137 A-L, N-P	1.3 Propellant Waste Sumps	
138 A-L, N-Q	1.3 Propellant Waste Drum Storage Pads	
158	Flammable Material Storage Bldg, TSA Bldg 3233	
159	Chemical Containment Storage, TSA Bldg 3327	
160	Mixer Bldg, TSA Bldg 7339	
161	Care Prep Bldg, TSA Bldg 7346	
162	Small Motor Loading "T", TSA Bldg 7347A	
163	Propellant Mixer, TSA Bldg 7353	
164	Mixer Bldg, TSA Bldg 7356	
165	Casting Bldg, TSA Bldg 7360	
166	Liner Preparation, TSA Bldg 7369	
167	Mixer Bldg, TSA Bldg 7382	
168	Motor Casting and Processing Bldg, TSA Bldg 7554	
169	Motor Assembly and Packout, TSA Bldg 7555	
170	Deaeration Cleanup, TSA Bldg 7593	
171	Propellant Mixing, TSA Bldg 7594	
173	Chemistry Lab, Pad 1, TSA Bldg 7632	
174	Chemistry Lab, Pad 2, TSA Bldg 7632	
175	Physical Property Lab, Pad 1, TSA Bldg 7636	
176	Physical Property Lab, Pad 2, TSA Bldg 7636	
177	Small Motor Finishing, TSA Bldg 7654	
178	Control Lab and First Aid, Pad 1, TSA Bldg 7667	
179	Control Lab and First Aid, Pad 2, TSA Bldg 7667	
180	Nitramine Drying Pilot, TSA Bldg 7688	
181	Nitramine Grinding Pilot, TSA Bldg 7690	

Draft

Table VI.3 (cont'd)

SWMU/AOC NUMBER	SWMU/AOC NAME	UNIT COMMENT
182	1.1 Grinder Bldg "P2", TSA Bldg 7695	
190	Disposal and Drainage Area West of ROP Line 2 Area	
193	Igniter Preparation Facility	
202	Graded Area Northeast of ROP Storage Igloos	
222	Roads and Grounds Maintenance Shop, Bldg 5494	
223	Central Railroad Classification Yard	
224	Container Storage Area	
228	Sewage Treatment Plant 2	
229	Former PX Service Station (Bldg 3197)	
232	SMF #1 Service Station	
235	Bulk Fuel Storage Facility	
240	Substation No.7, Formerly Bldg 5290 (demolished)	
243	Propellant Storage, Bldg 7342	
244	Propellant Mixing Bldg, Bldg 7356	
248	Battery Maintenance Shop, Bldg 3633	
251	Former Phosgene Plant	
253	Utility/Flammable Materials Storage (B6109)	
256	Scarred Area #2-NE of RSA-032 w/in Historic RR Spur Line	
258	Guard Shack Waiting Shelter/Paint Spray, Bldg 7862	
259	TA #2 Leach Field	
267	Drainage Ditch #4	
268	Sewage Treatment Plant, Bldg 8018	
270	Hazardous Waste TSA & Recycling Facility Bldg 5423	
276	Former Boiler House, Bldg 7362	
277	Bldg 5487, Wastewater Maintenance Shop Acid Bath Wash Down Area	
279	Smoke Grenade Area	
285	Former WP Grenade Test Area	
287	Component Storage Warehouse, Bldg 3634	
289	Drinking WTP#2, Sludge Thickener (Bldg 9102) & Sludge Drying Beds	
292	UST at Bldg 3311 (Boiler & Compressor House)	
295	Hazardous Waste TSA, Bldg S-3335	
296	Disposal Area North of RSA-011	
297	Ammunition Packing/Shipping, Bldg 7551	
298	Hazardous Waste TSA, Bldg 8408	*
299	Hazardous Waste TSA, Bldg 7216	*
300	Hazardous Waste TSA, Bldg 7172	*
301	Hazardous Waste TSA, Bldg 7173	*
302	Hazardous Waste TSA, Bldg 3802	*
303	Hazardous Waste TSA, Bldg 7700	*

Draft

Table VI.3 (cont'd)

SWMU/AOC NUMBER	SWMU/AOC NAME	UNIT COMMENT
307	Hazardous Waste TSAs B and C, Bldg 7347	*
310	Former OWS & Suspected OWS at Bldg 7289	
B	Abandoned Army Propellant Mfg., Bldg 7598	
MSFC-002/087	Inactive Abandoned Drum Disposal Site/Inactive Cyanide Lagoon	
MSFC-052E	Portion of Industrial Sewer East of MSFC Property	
MSFC-053	Former Propellant Storage Area and Test Stand Site	
MSFC-055	Site of Former Stauffer Chemical Company	
MSFC-060	Drainage System for Historic Redstone Test Site	
MSFC-065	1800-ft Surface Drainage Ditch/Area	
MSFC-074	Inactive Disposal Site, East Test Area	
MSFC-077	Former Burning Pits	
MSFC-D	Containment Area for Tanks 4234 A, B, & C	

* These sites are active and conditions will be re-evaluated when they are closed.

Draft

Table VI.4

The following Solid Waste Management Unit(s) (SWMU) and/or Area(s) of Concern (AOC) numbers and descriptions correspond with those noted in the RCRA Facility Assessment (RFA) Report. Where discrepancies exist, the permit will take precedence.

List of SWMUs and AOCs regulated by Parts I – III and VI of this permit.

SWMU/AOC NUMBER	SWMU/AOC NAME	UNIT COMMENT
012	Active Open Burn Pans, Unit 2 (OB)	
015	Hazardous Waste Storage Igloo, No.1 (8621)	
016	Hazardous Waste Storage Igloo, No.2 (8622)	
017	Hazardous Waste Storage Igloo, No.3 (8623)	
018	Hazardous Waste Storage Igloo, No. 4(8624)	
019	Hazardous Waste Storage Igloo, No. 5(8625)	
020	Hazardous Waste Storage Igloo, No. 6 (8630)	
021	Hazardous Waste Storage Igloo, No. 7(8631)	
022	Hazardous Waste Storage Igloo, No.8 (8632)	
023	Hazardous Waste Storage Igloo, No.9(8633)	
131	Active Open Detonation Area (OD)	
322	Hazardous Waste Storage Igloo, Bldg 8205	
323	Hazardous Waste Storage Igloo, Bldg 8208	
324	Hazardous Waste Storage Igloo, Bldg 8209	
325	Hazardous Waste Storage Igloo, Bldg 8210	
326	Hazardous Waste Storage Igloo, Bldg 8211	
327	Hazardous Waste Storage Igloo, Bldg 8212	
328	Hazardous Waste Storage Igloo, Bldg 8213	
329	Hazardous Waste Storage Igloo, Bldg 8214	
330	Hazardous Waste Storage Igloo, Bldg 8216	
331	Hazardous Waste Storage Igloo, Bldg 8217	
332	Hazardous Waste Storage Igloo, Bldg 8218	
333	Hazardous Waste Storage Igloo, Bldg 8219	
334	Hazardous Waste Storage Igloo, Bldg 8220	
335	Hazardous Waste Storage Igloo, Bldg 8221	
336	Hazardous Waste Storage Igloo, Bldg 8222	
337	Hazardous Waste Storage Igloo, Bldg 8223	
338	Hazardous Waste Storage Igloo, Bldg 8224	
339	Hazardous Waste Storage Igloo, Bldg 8225	
340	Hazardous Waste Storage Igloo, Bldg 8226	
341	Hazardous Waste Storage Igloo, Bldg 8227	
342	Hazardous Waste Storage Igloo, Bldg 8228	
343	Hazardous Waste Storage Igloo, Bldg 8229	
344	Hazardous Waste Storage Igloo, Bldg 8230	
345	Hazardous Waste Storage Igloo, Bldg 8231	

Draft

Table VI.5

The following Solid Waste Management Unit(s) (SWMU) and/or Area(s) of Concern (AOC) numbers and descriptions correspond with those noted in the RCRA Facility Assessment (RFA) Report. Where discrepancies exist, the permit will take precedence.

The following SWMUs and AOCs require Interim Measures (IM) and/or Source Removal:

SWMU/AOC NUMBER	SWMU/AOC NAME	UNIT COMMENT
051	Inactive Munitions Demil & Disposal, Area I	IM Work Plan to include removal of munitions/explosives in trenches.
052	Inactive Munitions Demil & Disposal, Area N	IM Work Plan to include removal of disposal trenches/UXO.
061	Inactive Munitions Demil/Disposal Area P	IM Work Plan to include removal of chemical agent in trenches.
063	Inactive Chemical Munitions Disposal Area M	IM Work Plan to include removal of CWM in burial trenches.
064	Inactive Munitions Demil/Disposal Area BB	IM Work Plan to include removal of chemical agent/CWM in trenches.
066	Inactive Ash Disposal Site, Area X-1	IM Work Plan to include removal of solvent contaminated waste disposal/demil areas.
068	Inactive Chemical Disposal, Area Z	IM Work Plan to include removal of explosive and laboratory contaminants in the burial trenches.
110	Former Drum Storage/Construction Debris, Area Y	IM Work Plan to include removal of surface MEC and piles of Dragon Rocket Motors.
112	Suspected Former Demil/Disposal, Area W	IM Work Plan to include removal of demil/disposal areas and UXO.
113	Inactive Disposal Trenches/Burn Pits	IM Work Plan to include removal of disposal trenches.
114	Inactive Madkin Mt Rock Quarry	IM Work Plan to include removal of waste piles and UXO.

Draft

Table VI.5 (cont'd)

SWMU/AOC NUMBER	SWMU/AOC NAME	UNIT COMMENT
188	Northern Burial Area/Burning Ground #3	IM Work Plan to include removal of debris piles, munitions, chemical & production wastes.
257	Rock Pond	IM Work Plan to include removal of UXO, slag/munitions debris piles.
264	RR Spring	IM Work Plan to include removal of munitions debris.
046/281	Disposal Trenches at RSA-046 Range	IM Work Plan to include removal of disposal trenches.
MSFC-003	Old Bone Yard Site	IM Work Plan to include removal of disposed chemical munitions, toxic materials, chemical wastes and burn pits.
MSFC-035	Inactive Sump/Tiled Drain Field – East TA	IM Work Plan to include removal of chemical wastes.

Draft

Table VI.6

The following Solid Waste Management Unit(s) (SWMU) and/or Area(s) of Concern (AOC) numbers and descriptions correspond with those noted in the RCRA Facility Assessment (RFA) Report. Where discrepancies exist, the permit will take precedence.

The following SWMUs and AOCs require a Corrective Measure Implementation (CMI) Plan:

Some sites listed within this table have had corrective measures implemented for one or more medium, and require a CMI plan for different media. Corrective measures at these sites are described in the documents listed in Table VIII.1. For example, RSA-087 is included on this table as requiring a CMI plan for groundwater and is also included on Table VIII.1 as having a corrective measures plan for surface media.

SWMU/AOC NUMBER	SWMU/AOC NAME	UNIT COMMENT	POTENTIALLY AFFECTED MEDIA*
003	In-ground Oil/Water Separator, Bldg 3617		Groundwater
011	Former Sewage Treatment Plant No. 1, OU-10	Groundwater to be investigated and/or remediated as part of RSA-146.	Groundwater
045	Smoke Munitions Plant 3		Soil and Groundwater
048	Inactive Sanitary Landfill, Area G		Soil and Groundwater
049	Capped Arsenic Waste Ponds – West, OU-5	Groundwater to be investigated and/or remediated as part of RSA-148.	Groundwater
056/122/139	Dismantled Lewisite Manufacturing Plant Sites, Closed Arsenic Waste Ponds and Former Arsenic Trichloride Manufacturing Disposal Area, OU-6		Soil and Groundwater
057	Inactive Arsenic Waste Lagoons – East, OU-6	Groundwater to be investigated and/or remediated as part of RSA-147.	Groundwater
058	Inactive Rubble Fill/Waste Pile, Area W	Groundwater to be investigated and/or remediated as part of RSA-145.	Groundwater
059	Inactive Construction Rubble Fill, Area R		Soil and Groundwater
083	Paint Spray Booth Sump, Bldg 7344		Groundwater

Draft

Table VI.6 (cont'd)

SWMU/AOC NUMBER	SWMU/AOC NAME	UNIT COMMENT	POTENTIALLY AFFECTED MEDIA*
087	Inactive Temporary Waste Storage Pad 1&2, Bldg 7368	Groundwater to be investigated and/or remediated as part of RSA-146.	Groundwater
088	Inactive Temporary Waste Storage Pad, Bldg 7625	Groundwater to be investigated and/or remediated as part of RSA-146.	Groundwater
089	Inactive Temporary Waste Storage Pad, Bldg 7726	Groundwater to be investigated and/or remediated as part of RSA-146.	Groundwater
092	Inactive Temporary Waste Storage Pad, Bldg 7552	Groundwater to be investigated and/or remediated as part of RSA-146.	Groundwater
093	Reclaimed Empty Drum Storage Pad, Bldg 7368		Groundwater
094	Chlorinated Solvent Distillation Unit 1, OU-10	Groundwater to be investigated and/or remediated as part of RSA-146.	Groundwater
095	Chlorinated Solvent Distillation Unit 2, Bldg 7368	Groundwater to be investigated and/or remediated as part of RSA-146.	Groundwater
096	Chlorinated Solvent Distillation Unit 3, Bldg 7740	Groundwater to be investigated and/or remediated as part of RSA-146.	Groundwater
097	Chlorinated Solvent Distillation Unit 4, Bldg 7726	Groundwater to be investigated and/or remediated as part of RSA-146.	Groundwater
138M	ROP Tetryl Processing Line	Groundwater to be investigated and/or remediated as part of RSA-146.	Groundwater
140	Inactive Disposal Area near T/S Tower	Soil to be remediated as RSA-140. Groundwater to be remediated with RSA-219	Soil and Groundwater
142	TCE Spill by Thiokol Degreasing Process	Groundwater to be investigated and/or remediated as part of RSA-146.	Groundwater
144	Degreaser at Bldg 7554	Groundwater to be investigated and/or remediated as part of RSA-146.	Groundwater
172	Motor Pool, TSA Bldg 7630	Groundwater to be investigated and/or remediated as part of RSA-146.	Groundwater
183	Former Lewisite Manufacturing Plants 1 and 2, OU-5		Soil and Groundwater

Draft

Table VI.6 (cont'd)

SWMU/AOC NUMBER	SWMU/AOC NAME	UNIT COMMENT	POTENTIALLY AFFECTED MEDIA*
187	Northern Thiokol Propellant Mixing Facility	Groundwater to be investigated and/or remediated as part of RSA-146.	Groundwater
189	Motor/Oxidizer Preparation Facilities (ROP Line 2 Area)	Groundwater to be investigated and/or remediated as part of RSA-146.	Groundwater
191	ROP Line 1 Service Facilities	Groundwater to be investigated and/or remediated as part of RSA-146.	Groundwater
192	Tetryl and Igniter Processing (ROP Line 1 Area)	Groundwater to be investigated and/or remediated as part of RSA-146.	Groundwater
194	Physical Test Laboratory and Storage Facilities	Groundwater to be investigated and/or remediated as part of RSA-146.	Groundwater
195	Propellant Mixing Facility #1, Bldg 7363	Groundwater to be investigated and/or remediated as part of RSA-146.	Groundwater
196/098	Test Stand and Cleaning Building/Chlorinated Solvent Unit Bldg 7346, OU-10	Groundwater to be investigated and/or remediated as part of RSA-146.	Groundwater
197	Rocket Motor Static Test Stand	Groundwater to be investigated and/or remediated as part of RSA-146.	Groundwater
198/085	Equipment/Tool Cleaning Facility, Bldg 7359/Inactive Temporary Storage Pad 1	Groundwater to be investigated and/or remediated as part of RSA-146.	Groundwater
199	Propellant Mixing Facility #2, Bldg 7382	Groundwater to be investigated and/or remediated as part of RSA-146.	Groundwater
200	ROP Line 5 Area Operations Facilities	Groundwater to be investigated and/or remediated as part of RSA-146.	Groundwater
201	Research Laboratory, Bldg 7632		Soil and Groundwater
203	Igloo Area Loading Dock, Bldg 7351	Groundwater to be investigated and/or remediated as part of RSA-146.	Groundwater
205	Photo Lab and Motor Service Facility, Former Bldg 7628	Groundwater to be investigated and/or remediated as part of RSA-146.	Groundwater

Draft

Table VI.6 (cont'd)

SWMU/AOC NUMBER	SWMU/AOC NAME	UNIT COMMENT	POTENTIALLY AFFECTED MEDIA*
206	Propellant Mixing Facility #2 and Casting Facility, Bldg 7339/40		Groundwater
207	Gorgas Laboratory, Bldg 7770	Groundwater to be investigated and/or remediated as part of RSA-146.	Groundwater
209	Propellant Crushing/Grinding and Fuse Production		Groundwater
210	Nitroglycerine Wash House	Groundwater to be investigated and/or remediated as part of RSA-146.	Groundwater
211	South Plant Storage Magazines	Groundwater to be investigated and/or remediated as part of RSA-146.	Groundwater
212	Propellant Dry Houses	Groundwater to be investigated and/or remediated as part of RSA-146.	Groundwater
213	ROP Line 4 Area Operations Facilities	Groundwater to be investigated and/or remediated as part of RSA-146.	Groundwater
214	ROP Line 6 Area Operations Facilities	Groundwater to be investigated and/or remediated as part of RSA-146.	Groundwater
215	RSA-146 Historic Service Facilities	Groundwater to be investigated and/or remediated as part of RSA-146.	Groundwater
220	Construction Material Storage Yard	Groundwater to be investigated and/or remediated as part of RSA-146.	Groundwater
225	Fuse Modification Line 7		Groundwater
226	Open Storage 54-2	Groundwater to be investigated and/or remediated as part of RSA-147.	Groundwater
227	Inactive Washrack (adjacent to Bldg 5492)	Groundwater to be investigated and/or remediated as part of RSA-147.	Groundwater
233	SMF #2 Mixing & Prep Facilities	Groundwater to be investigated and/or remediated as part of RSA-145.	Groundwater
236	Grenade Packing & Assembly	Groundwater to be investigated and/or remediated as part of RSA-145.	Groundwater

Draft

Table VI.6 (cont'd)

SWMU/AOC NUMBER	SWMU/AOC NAME	UNIT COMMENT	POTENTIALLY AFFECTED MEDIA*
237	Propellant Cutting and Drying	Groundwater to be investigated and/or remediated as part of RSA-146.	Groundwater
239	ROP Line #1 Boiler House		Soil and Groundwater
242	Hazardous Waste Storage Igloo, Bldg 7314		Soil
247	Steel Fabrication/Maintenance Facility, Bldg 7644		Soil and Groundwater
252	Incendiary Bomb Facility Plant 2 Area		Soil and Groundwater
255	Coal/Manganese Ore Storage Area N. of RSA-065		Soil
261	Lance Missile Conditioning Facility, Bldg 7847	Groundwater to be investigated and/or remediated as part of RSA-154.	Groundwater
263	CWS Motor Pool (Bldg 8017)/Change House (Bldg 8020)		Groundwater
265	Gasoline Drum Storage Area	Groundwater to be investigated and/or remediated as part of RSA-155.	Groundwater
272	Former UST for Boiler Unit, Bldg 7650	Groundwater to be investigated and/or remediated as part of RSA-146.	Groundwater
273	Propellant Conditioning & Motor Cycling, Bldg 7364	Groundwater to be investigated and/or remediated as part of RSA-146.	Groundwater
274	Physics Laboratory & High Explosives Storage Magazine, Bldg 7540	Groundwater to be investigated and/or remediated as part of RSA-146.	Groundwater
275	Film Processing Laboratory, Former Bldg S-7173	Groundwater to be investigated and/or remediated as part of RSA-146.	Soil and Groundwater
280	Skunk Hollow Small Arms Range		Soil
288	Drinking WTP#1, Sludge Thickener & Drying Beds, Bldgs 8043 & 8044	Groundwater to be investigated and/or remediated as part of RSA-155.	Groundwater
294	Field Training Exercise Area E		Soil and Groundwater

Draft

Table VI.6 (cont'd)

SWMU/AOC NUMBER	SWMU/AOC NAME	UNIT COMMENT	POTENTIALLY AFFECTED MEDIA*
305	Dispatcher's Office with Washrack, Bldg 3664	Groundwater to be investigated and/or remediated as part of RSA-145.	Groundwater
306	Steam Heating Plant, Bldg 7291		Groundwater
315	Abandoned Drum Area near the Golf Course		Soil
A	Inactive Propellant Storage Wells South	Groundwater to be investigated and/or remediated as part of RSA-146.	Groundwater
C	Abandoned Army Propellant Mixing Bldg 7596	Groundwater to be investigated and/or remediated as part of RSA-146.	Groundwater
D	Paint Storage Shed, Bldg 3547	Groundwater to be investigated and/or remediated as part of RSA-145.	Groundwater
MSFC-033A	Surface Soils East of Building 4816, Adjacent to MSFC-033		Soil
IWGW	Installation-Wide Groundwater	LUCs	Groundwater

*The SWMUs that require CMI Plans for Groundwater only shall be submitted to the Department upon completion of investigation activities of the respective SWMUs (e.g., CMI for RSA-214 to be included in CMI Plan for RSA-146, etc.).

Draft

PART VII

GROUNDWATER MONITORING AND CORRECTIVE ACTION

VII.A. REQUIRED PROGRAM(S)

1. Groundwater monitoring shall consist of the General Groundwater Monitoring Program of Permit Condition VII.B., the Compliance Monitoring Program contained in Permit Condition VII.D and the Corrective Action Monitoring Program contained in Permit Condition VII.E.

2. The Permittee shall commence groundwater monitoring as required by this permit no later than 120 calendar days after the effective date of this permit.

VII.B. GENERAL GROUNDWATER MONITORING PROGRAM

1. Well Location, Installation and Construction

The Permittee shall install and/or designate groundwater monitoring wells in order to maintain a groundwater monitoring system to comply with the requirements of ADEM Admin. Code Rules 335-14-5-.06(8), 335-14-5-.06(9), 335-14-5-.06(10), and 335-14-5-.06(11) as applicable and as specified below:

a. The Permittee shall maintain all groundwater monitoring wells at the facility as identified in Table VII.1 of this permit, at the locations specified on Figure II.G-5 of the permit renewal application, and any other groundwater monitoring wells specified by Permit Condition VII.B.1.d.

i. All groundwater monitoring wells shall be maintained in accordance with the plans and specifications presented in Section II.G of the permit renewal application and in accordance with ADEM Admin. Code Rule 335-14-5-.06.

ii. A groundwater monitoring well shall not be removed from any monitoring program specified in this permit without an approved permit modification pursuant to Permit Condition I.J.

iii. If a groundwater monitoring well is damaged, the Permittee shall immediately notify the Department in writing, which includes a description of the well repair activities to be conducted. The well repair procedures must be approved by the Department prior to implementation. Within 30 calendar days after the well is repaired, the Permittee shall submit a written notification to the Department that the well repair activities were conducted in accordance with the approved procedures.

iv. If a groundwater monitoring well is deleted from the monitoring program(s) required by this permit in accordance with Permit Conditions VII.B.1.a.ii. and I.J., it shall be abandoned within 90 calendar days after deletion using procedures to be approved by the Department. Within 30

Draft

calendar days after the well is abandoned, the Permittee shall submit a written notification to the Department that the well abandonment activities were conducted in accordance with the approved procedures.

b. Groundwater monitoring wells RS107, RS187, RS210, RS240, RS241, RS337, and RS476 shall define the point of compliance for the OB and OD Units. Groundwater monitoring well RS253 shall be used as the background well for the OB and OD units.

c. The Permittee shall maintain the background monitoring well(s) listed in Table VII.1 to assess the groundwater quality for the respective units.

d. The Permittee shall install and/or designate groundwater monitoring wells as necessary to assess changes in the rate and extent of any plume of contamination or as otherwise deemed necessary to maintain compliance with ADEM Admin. Code Rules 335-14-5-.06(6), 335-14-5-.06(8), 335-14-5-.06(9), 335-14-5-.06(10), and 335-14-5-.06(11), as applicable. A plan in the form of a permit modification, in accordance with Permit Condition I.J, request specifying the design, location and installation of any additional monitoring wells should be submitted to the Department at least 90 calendar days prior to installation which, at a minimum, shall include:

i. Well construction techniques including casing depths and proposed total depth of well(s);

ii. Well development method(s);

iii. A complete description of well construction materials;

iv. A schedule of implementation for construction; and,

v. Provisions for determining the lithologic characteristics, hydraulic conductivity, grain size distribution, and porosity for the applicable aquifer unit(s) at the location of the new well(s).

2. General Groundwater Monitoring Requirements

a. The Permittee shall determine the groundwater surface elevation from all monitoring wells listed in Table VII.1 of this permit at least annually and each time a sampling event is conducted. The results of these determinations should be submitted in accordance with Permit Condition VII.B.6. Elevation data should be recorded and reported as mean sea level (MSL) and referenced to an appropriate North American Vertical Datum (NAVD) benchmark.

i. The Permittee shall sample GW Wells listed in Table VII.1 at the OB and OD areas for the constituents listed in Table VII.2 on an annual basis.

Draft

b. The Permittee shall determine the groundwater flow rate and direction in the underlying aquifer(s) at least annually and submit the results in accordance with Permit Condition VII.B.6.

c. The Permittee shall determine background concentrations of hazardous constituents and other chemical parameters required to be monitored by this permit in accordance with Section II.G of the permit renewal application and ADEM Admin. Code Rule 335-14-5-.06(8)(g).

3. Groundwater Protection Standard

a. The groundwater protection standard, as required under ADEM Admin. Code Rule 335-14-5-.06(3), shall consist of Table VII.3 of this permit which lists the hazardous constituents and their respective concentration limits.

b. The groundwater protection standard applies to all hazardous waste or hazardous constituent releases as deemed appropriate by the Department to protect human health and the environment.

4. Compliance Period

a. The compliance period, during which the groundwater protection standard specified in Permit Condition VII.B.3. applies, shall begin at the time of the first sampling event of the compliance monitoring program (Permit Condition VII.D.), or the corrective action monitoring program (Permit Condition VII.E.), whichever is earlier.

b. The compliance period shall continue (after beginning pursuant to Permit Condition VII.B.4.a.) until the groundwater protection standard as defined by Permit Condition VII.B.3.a. has not been exceeded for a period of three consecutive years.

c. If the Permittee is engaged in a corrective action program pursuant to Permit Condition VII.E., then the compliance period shall continue as required by ADEM Admin. Code Rule 335-14-5-.06(7)(c) until the groundwater protection standard has not been exceeded for a period of three consecutive years after corrective action has been terminated and this permit has been modified, in accordance with Permit Condition I.J., to implement a compliance monitoring program pursuant to Permit Condition VII.D. or a detection monitoring program pursuant to Permit Condition VII.C., as required by ADEM Admin. Code Rule 335-14-5-.06(11)(f).

5. Sampling and Analysis Procedures

The Permittee shall use the following techniques and procedures when obtaining and analyzing samples from the groundwater monitoring wells described in Permit Condition VII.B.1. to provide a reliable indication of the quality of the groundwater as required under ADEM Admin. Code Rules 335-14-5-.06(8)(d), (e), and (g):

Draft

a. Samples shall be collected, preserved, and shipped (when shipped off-site for analysis) in accordance with the procedures specified in Section II.G of the permit application.

b. Samples shall be analyzed according to the procedures specified in Section II.G of the permit application, the most recent edition of SW-846 or other appropriate methods approved by the Department. Analytical method detection limits shall be less than or equal to the concentration limits specified in Table VII.3, unless otherwise approved in writing by the Department.

c. Samples shall be tracked and controlled using the chain-of-custody procedures specified in Section II.G of the permit application.

d. Statistical analyses used to evaluate the groundwater monitoring data shall be as described in Section II.G of the permit application and ADEM Admin. Code Rule 335-14-5-.06(8)(h).

e. All samples taken in accordance with this permit shall not be filtered prior to analysis.

6. Recordkeeping and Reporting

a. The Permittee shall keep and maintain all monitoring, testing, and analytical data obtained in accordance with Permit Conditions VII.B., VII.C, VII.D, and VII.E. as required by Permit Condition I.C.10.

b. The Permittee shall submit to the Department written reports to include all analytical sampling data, established background values, statistical evaluations, groundwater elevations, associated potentiometric maps, and the annual groundwater flow rate and direction determinations. The analytical method and the method detection limit (MDL) for each constituent must be integrated into all reports of analysis. The reports shall be submitted within 60 calendar days after the first sampling events and on an annual basis thereafter. Copies of these reports shall be kept at the facility in accordance with Permit Conditions I.C.10.c. and I.C.10.e.

c. The Permittee shall submit progress reports to the Department describing implementation of groundwater monitoring and/or corrective action activities at the site as required by Part VII of this permit on a quarterly basis. The first progress report shall be submitted to the Department within 90 calendar days after the effective date of this permit. The progress reports shall continue until such time as the required monitoring and/or corrective action systems and activities required by this permit are fully constructed and operational. In the event that additional monitoring and/or corrective action requirements are imposed through a permit modification, in accordance with Permit Condition I.J., the quarterly reporting requirement shall resume, commencing upon the effective date of the permit modification and continuing until the required monitoring and/or corrective action systems and activities are again fully constructed and operational.

Draft

VIIC. DETECTION MONITORING PROGRAM (RESERVED)

VII.D. COMPLIANCE MONITORING PROGRAM

The requirements of this Condition are applicable to the OB and OD Units. Except as specified otherwise in this permit, the Compliance Monitoring Program shall be implemented in accordance with Section II.G of the permit application, and ADEM Admin. Code Rule 335-14-5-.06(10).

1. Monitoring Requirements

In addition to the general groundwater monitoring requirements specified in Permit Condition VII.B.2., the Permittee shall:

a. Sample all point of compliance wells and background wells and analyze for the constituents listed in Tables VII.2. and VII.3 of this permit annually in accordance with Permit Condition VII.B.5 throughout the compliance monitoring period. This schedule shall begin within 120 calendar days of the effective date of this permit.

b. Sample and analyze for temperature (degrees F or C), specific conductance (Mhos/cm), and pH (standard units), at all background and point of compliance monitoring well locations each time the well is sampled in accordance with Permit Condition VII.B.5. The data obtained should be submitted as raw data in the reports required by Permit Condition VII.B.6.

c. Sample all point of compliance and designated background monitoring wells and analyze, in accordance with Permit Condition VII.B.5., for the constituents listed in ADEM Admin Code Rule 335-14-5-Appendix IX in addition to the constituents listed in Tables VII.2. and VII.3 of this permit at the beginning of the compliance monitoring period and thereafter on an annual basis throughout the compliance period. [ADEM Admin. Code Rule 335-14-5-.06(10)(g).]

2. Reporting and Response Requirements

In addition to the recordkeeping and reporting requirements specified in Permit Condition VII.B.6., the Permittee shall perform statistical evaluation of monitoring well analytical data for each monitoring event pursuant to Permit Condition VII.B.5 and ADEM Admin. Code Rule 335-14-5-.06(10)(d).

a. If the Permittee determines, pursuant to Permit Conditions VII.B.5. and VII.D.1.c. and ADEM Admin. Code Rules 335-14-5-.06(10)(d) and 335-14-5-.06(10)(g), that any constituent(s) listed in ADEM Admin. Code Rule 335-14-5-Appendix IX but not listed in Table VII.3. of this permit is detected at any point of compliance or background well, he or she must comply with ADEM Admin. Code Rule 335-14-5-.06(10)(g).

Draft

b. If the Permittee determines pursuant to Permit Conditions VII.B.5. and VII.D.1.c. and ADEM Admin. Code Rule 335-14-5-.06(10)(d) that any concentration limits listed in Table VII.3 of this permit exceeded in any monitoring well at the point of compliance, he or she must comply with ADEM Admin. Code Rule 335-14-5-.06(10)(h).

VII.E. CORRECTIVE ACTION MONITORING PROGRAM

The requirements of this Condition are applicable to RSA-049, RSA-053, RSA-054/RSA-055, RSA-060 and RSA-204. Except as specified otherwise in this permit, the Corrective Action Monitoring Programs shall be implemented in accordance with the approved CMI Plans and Corrective Action Plans (CAPs) for the SWMUs/AOCs and ADEM Admin. Code Rule 335-14-5-.06(11).

1. Monitoring Systems

In addition to the point of compliance and background well monitoring systems identified in Permit Conditions VII.B.1.b. and VII.B.1.c., the Permittee shall:

a. Maintain groundwater monitoring wells RS065, RS065A, RS066, RS643, RS961, RS1111, RS1114, RS1121, RS1148, RS1149, RS1151, RS1152, RS1153, RS1154, RS1157, RS1158, RS1159, RS1160, RS1164, RS1167, RS1294, RS1353, RS1413 (shallow and deep), RS1414, RS1416, RS1418, RS1419, RS1483, RS1486c, RS1488d, RS1489e, RS1514 (shallow and deep), RS1518 (all screened intervals), RS1520 (all screened intervals), RS1522 (shallow and deep), RS1523, RS1527, RS1534 (all screened intervals), RS1673a, RS1675 (shallow and deep), RS1711, RS1779, RS1783 (shallow and deep), RS1785 (shallow and deep), RS1786 (shallow and deep), RS1806 (all screened intervals), MSW13, MSW14, MSW16, MSW18a, INCRK-01, OFF-SW27 and P-SW11 as boundary wells/sampling points for the entire facility as specified in Table VII.1 of this permit.

b. Maintain groundwater monitoring wells RS054, RS263, RS633, RS635, RS636, RS1074, RS1090, RS1589, RS1590, RS1591, RS1592 and RS1973 as effectiveness wells for RSA-049 as specified in Table VII.1 of this permit. Wells RS634, RS1087, RS1593, and RS1594 shall be maintained as background wells for RSA-049.

c. Maintain groundwater monitoring wells RS1996, RS1997, RS138, RS139, RS179, RS192, RS273, RS274, RS348 and RS349 as effectiveness wells for RSA-053, as specified in Table VII.1 of this permit. RS270, RS2175 and RS2003 shall be maintained as upgradient wells for RSA-053 and RSP-1207 (Spring) shall be maintained as a point of compliance for RSA-053.

d. Maintain groundwater monitoring wells RS038, RS039, RS165, RS166, RS200, RS201, RS223, RS297, RS384 and RS385 as effectiveness wells for RSA-054/RSA-055, as specified in Table VII.1 of this permit.

Draft

e. Maintain groundwater monitoring wells RS020, RS022, RS197, RS282, RS292, RS552, RS555, RS556, RS2723 and RS2759 as effectiveness wells for RSA-060, as specified in Table VII.1 of this permit. RS285 will be maintained as a background well for RSA-060.

f. Maintain groundwater monitoring wells RS690, RS691, RS1223, RS1550, RS2027, RS2029, RS2030, RS2031, RS2032, RS2033, RS2034, RS2668, RS2670, RS2672, RS2673, RS2674, RS2675, RS2676, RS2677, RS2678, RS2683, RS2791, RS2792, RS2793, RS2794, and RS2874 as effectiveness wells for RSA-204, as specified in Table VII.1 of this permit.

g. **RESERVED**

2. Corrective Action Program

a. The Permittee shall conduct a Corrective Action Program, as described in the approved CMI Plans, to remove or treat in place all hazardous constituents that exceed their respective groundwater protection standards as described in Table VII.3. of this permit at the point of compliance, between the point of compliance and the down-gradient facility property boundary, and beyond the facility boundary in accordance with ADEM Admin. Code Rule 335-14-5-.06(11)(e)2.

b. Pursuant to ADEM Admin. Code Rules 335-14-5-.06(11)(c) and 335-14-5-.06(11)(e)3., the Permittee shall continue to implement the corrective action program as described in the approved CMI Plans within 120 calendar days after the effective date of this permit.

c. The Permittee shall handle/treat groundwater in accordance with the approved CMI Plans and with the applicable requirements of the Hazardous Waste Facility Permit AL7 210 020 742 as issued by the Department.

3. Monitoring Requirements

In addition to the general groundwater monitoring requirements specified in Permit Condition VII.B.2., the Permittee shall:

a. Sample all background, upgradient, point of compliance and effectiveness monitoring wells shown in Table VII.1 of this permit and analyze for the constituents listed in Table VII.2 of this permit on an annual basis beginning within 120 calendar days of the effective date of this permit and continuing through the end of the compliance period.

i. At RSA-049, the Permittee shall sample GW Wells listed in Table VII.1 on a semiannual basis for the constituents listed in Table VII.3.

ii. At RSA-053, the Permittee shall sample groundwater wells listed in Table VII.1 on a quarterly basis for the constituents listed in Table VII.3. After two years of quarterly sampling, the Permittee may request a permit modification, in accordance with Permit Condition I.J., to modify

Draft

the sampling frequency based on sampling results presented in the Annual Effectiveness Reports.

iii. At RSA-054/RSA-055, the Permittee shall sample the groundwater wells listed in Table VII.1 on a quarterly basis for the constituents listed in Table VII.3. After one year of quarterly sampling, the Permittee may request a permit modification, in accordance with Permit Condition I.J., to modify the sampling frequency based on sampling results presented in the Annual Effectiveness Report.

iv. At RSA-060, upon submittal of the CMI report, the Permittee shall initiate sampling of the groundwater wells listed in Table VII.1 on a quarterly basis for the constituents listed in Table VII.3. After three years of quarterly monitoring, the Permittee may request a permit modification, in accordance with Permit Condition I.J., to modify the sampling frequency or analyte list based on sampling results presented in the Annual Effectiveness Report.

v. At RSA-204, upon submittal of the CMI report, the Permittee shall initiate sampling of the groundwater wells listed in Table VII.1 on a quarterly basis for the first year and then on a semiannual basis for the next two years as prescribed in the CMI Plan for the constituents listed in Table VII.3. After two years of semiannual monitoring, the Permittee may request a permit modification, in accordance with Permit Condition I.J., to modify the sampling frequency or analyte list based on sampling results presented in the Annual Effectiveness Report.

b. Sample all background, upgradient, point of compliance, effectiveness, and boundary monitoring wells shown in Table VII.1. of this permit and analyze for the constituents listed in Table VII.3. of this permit on an annual basis beginning within 120 calendar days of the effective date of this permit and continuing through the end of the compliance period.

c. Sample all background, upgradient, point of compliance, effectiveness, and boundary monitoring wells shown in Table VII.1. of this permit and analyze for temperature (degrees F or C), specific conductance (Mhos/cm), and pH (standard units) each time the well is sampled. The data obtained should be submitted as raw data in the reports required by Permit Condition VII.B.6.

d. When evaluating the monitoring results to determine the effectiveness of the corrective measures, in accordance with Permit Condition VII.E.4., the Permittee shall:

i. Determine if the corrective action system effectively addresses the entire plume of contamination;

ii. Determine if the concentration of the hazardous constituents are decreasing (pH increasing or decreasing toward neutrality, as applicable) in the effectiveness wells specified in Permit Condition VII.A.1.;

Draft

iii. Determine if hazardous waste or hazardous constituents are being released into the environment; and,

iv. Determine if hazardous constituents have been detected in the boundary wells specified in Permit Condition VII.A.1.

4. Reporting and Response Requirements

In addition to the recordkeeping and reporting requirements specified in Permit Condition VII.B.6.:

a. The Permittee shall report the effectiveness of the corrective action program annually as required under ADEM Admin. Code Rule 335-14-5-.06(11)(g). These reports shall be submitted to the Department within 60 calendar days of each annual anniversary of this permit after corrective action is initiated and continue until corrective action is completed. The Permittee must provide data from groundwater monitoring along with an analysis of that data and any conclusions regarding the effectiveness of the program in accordance with Permit Condition VII.E.3.d. If the analysis of the data warrants any change to the corrective action program, the Permittee must include these revisions in the annual report which will be followed up within 90 calendar days with an application for permit modification in accordance with Permit Condition I.J.

b. If corrective action is terminated under Permit Condition VII.B.4.c., the Permittee must sample all background, point of compliance, effectiveness and boundary sampling locations for the compounds listed in ADEM Admin. Code Rule 335-14-5-Appendix IX. Based upon the sampling results, the Permittee may petition the Department, in accordance with Permit Condition I.J, for a permit modification to implement either a detection monitoring program or a compliance monitoring program.

Draft

Table VII.1

MONITORING WELL DESIGNATIONS

TEST LOCATION	TYPE[1]	LATITUDE	LONGITUDE	UNIT(S) MONITORED	DEPTH (ft)	GROUND ELEVATION (ft. MSL)	TOP OF RISER ELEVATION (ft. MSL)	SCREENED INTERVAL (ft. bgs)	MONITORED ZONE[2]
RS107	POC	34°34' 15.98"N	86°39' 56.34"W	OB and OD RSA-012	43.0	569.29	571.58	30.0-40.0	Overburden
RS187	POC	34°34' 20.18"N	86°39' 59.72"W	OB and OD RSA-012	33.5	564.39	566.42	26.0-30.5	Overburden
RS210	POC	34°34' 13.05"N	86°40' 02.47"W	OB and OD RSA-012	54.0	567.52	570.27	40.0-50.0	Overburden
RS240	POC	34°34' 20.00"N	86°39' 59.81"W	OB and OD RSA-012	74.0	565.01	567.91	57.0-66.0	Bedrock
RS241	POC	34°34' 21.12"N	86°40' 02.10"W	OB and OD RSA-012	33.5	570.64	573.49	18.9-27.9	Overburden
RS337	POC	34°34' 12.74"N	86°40' 02.54"W	OB and OD RSA-012	161.0	567.30	569.91	151.0-160.0	Bedrock
RS476	POC	34°34' 15.73"N	86° 40' 07.06"W	OB and OD RSA-012	38.0	563.65	562.00	17.0-37.0	Overburden
RS253	BKG	34° 33' 58.65"N	86° 39' 48.62"W	OB and OD (GW RSA-151)	27.6	574.56	576.71	17.6 – 26.6	Overburden
RS054	EFF	34° 39' 14.28"N	86° 39' 26.15"W	RSA-049	56.8	613.56	616.66	41.8-51.8	Overburden
RS263	EFF	34° 39' 13.23”N	86° 39' 24.34"W	RSA-049	42.4	608.86	610.76	32.4-41.8	Overburden
RS633	EFF	34° 39' 17.36"N	86° 39' 15.89"W	RSA-049	50.0	613.47	615.97	29.0-44.0	Overburden
RS634	BKG	34° 39' 21.04"N	86° 39' 20.58"W	RSA-049 (GW RSA-149)	33.5	612.93	615.43	17.8-32.8	Overburden
RS635	EFF	34° 39' 22.67"N	86° 39' 24.64"W	RSA-049	40.5	619.78	622.28	25.0-40.0	Overburden
RS636	EFF	34° 39' 17.36"N	86° 39' 27.79"	RSA-049	43.5	621.77	624.44	27.5-42.5	Overburden
RS1074	EFF	34° 39' 13.29"N	86° 39' 16.54"W	RSA-049	106.0	608.57	611.36	95.7-105.7	Bedrock
RS1087	BKG	34° 39' 21.23"N	86° 39' 20.35"W	RSA-049 (GW RSA-149)	76.5	612.86	616.4	66.2-76.2	Bedrock
RS1090	EFF	34° 39' 18.46"N	86° 39' 27.81"W	RSA-049	95.0	623.20	626.04	83.0-92.7	Bedrock
RS1589	EFF	34° 39' 16.25"N	86° 39' 15.91"W	RSA-049	49.0	611.03	614.61	34.0-49.0	Overburden

Draft

TEST LOCATION	TYPE[1]	LATITUDE	LONGITUDE	UNIT(S) MONITORED	DEPTH (ft)	GROUND ELEVATION (ft. MSL)	TOP OF RISER ELEVATION (ft. MSL)	SCREENED INTERVAL (ft. bgs)	MONITORED ZONE[2]
RS1590	EFF	34° 39' 14.30"N	86° 39' 19.93"W	RSA-049	79.0	610.16	612.48	69.0-79.0	Bedrock
RS1591	EFF	34° 39' 14.16"N	86° 39' 21.80"W	RSA-049	66.0	610.53	613.71	51.0-66.0	Bedrock
RS1592	EFF	34° 39' 14.17"N	86° 39' 21.91"W	RSA-049	48.0	610.53	613.71	33.0-48.0	Overburden
RS1593	BKG	34° 39' 14.81"N	86° 39' 31.67"W	RSA-049 (GW RSA-149)	117.0	620.67	623.91	107.0-117.0	Bedrock
RS1594	BKG	34° 39' 14.68"N	86° 39' 31.78"W	RSA-049 (GW RSA-149)	45.0	620.32	623.86	30.0-45.0	Overburden
RS1973	EFF	34°39'9.878"N	86°39'16.988"W	RSA-049	46.0	614.83	617.54	36.0-46.0	Overburden
RS1996	EFF	34°37'48.09"N	86°38'51.83"W	RSA-053	52.5	605.77	607.97	42.1-52.1	Overburden
RS1997	EFF	34°37'47.49"N	86°38'51.39"W	RSA-053	90.0	605.13	607.85	80.0-90.0	Bedrock
RS138	EFF	34°37'40.16"N	86°38'42.52"W	RSA-053	43.0	568.70	570.84	21.5-41.5	Overburden
RS139	EFF	34°37'39.98"N	86°38'47.00"W	RSA-053	40.0	580.83	583.32	30.0-40.0	Overburden
RS179	EFF	34°37'37.09"N	86°38'47.35"W	RSA-053	24.9	559.27	561.31	19.7-24.7	Overburden
RS192	EFF	34°37'45.18"N	86°38'44.03"W	RSA-053	66.0	600.29	602.45	57.0-66.0	Overburden
RS270	UPG	34°37'55.88"N	86°38'57.55"W	RSA-053	46.6	591.48	594.2	36.6-45.6	Overburden
RS273	EFF	34°37'50.13"N	86°38'46.19"W	RSA-053	40.2	603.59	605.89	27.7-36.7	Overburden/ Perched
RS274	EFF	34°37'50.19"N	86°38'46.32"W	RSA-053	71.6	603.46	606.00	59.1-68.1	Overburden
RS348	EFF	34°37'56.87"N	86°38'52.45"W	RSA-053	38.0	603.51	606.36	26.0-36.0	Overburden/ Perched
RS349	EFF	34°37'56.89"N	86°38'52.32"W	RSA-053	63.0	603.67	606.34	52.0-62.0	Overburden
RS2175	UPG	34°37'52.58"N	86°38'55.01"W	RSA-053	92.0	603.71	605.04	81.0-91.0	Bedrock
RS2003	UPG	34°37'52.58"N	86°38'55.08"W	RSA-053	58.0	603.33	604.48	47.0-57.0	Overburden
RSP-1207	POC	34°37'37.61"N	86°38'43.23"W	RSA-053	N/A	N/A	N/A	N/A	Spring

Draft

TEST LOCATION	TYPE[1]	LATITUDE	LONGITUDE	UNIT(S) MONITORED	DEPTH (ft)	GROUND ELEVATION (ft. MSL)	TOP OF RISER ELEVATION (ft. MSL)	SCREENED INTERVAL (ft. bgs)	MONITORED ZONE[2]
RS038	EFF	34° 38' 30.46"N	86° 38' 28.93"W	RSA-054/055	52.5	625.69	628.56	37.5-47.5	Overburden
RS039	EFF	34° 38' 24.35"N	86° 38' 31.13"W	RSA-054/055	46.0	634.77	638.49	30.0-41.0	Overburden
RS165	EFF	34° 38' 41.58"N	86° 38' 29.24"W	RSA-054/055	44.0	609.28	611.99	21.0-41.0	Overburden
RS166	EFF	34° 38' 24.53"N	86° 38' 41.24"W	RSA-054/055	66.0	615.61	617.93	51.0-61.0	Overburden
RS200	EFF	34° 38' 44.88"N	86° 38' 33.19"W	RSA-054/055	41.0	604.26	607.00	26.0-37.0	Overburden
RS201	EFF	34° 38' 30.25"N	86° 38' 43.05"W	RSA-054/055	60.0	611.82	614.23	47.0-57.0	Overburden
RS223	EFF	34° 38' 36.33"N	86° 38' 29.49"W	RSA-054/055	44.0	614.13	616.86	29.0-39.0	Overburden
RS297	EFF	34° 38' 42.21"N	86° 38' 43.02"W	RSA-054/055	44.4	627.86	630.65	31.9-40.9	Overburden
RS384	EFF	34° 38' 25.94"N	86° 38' 43.36"W	RSA-054/055	42.0	614.74	617.69	27.0-42.0	Overburden
RS385	EFF	34° 38' 37.37"N	86° 38' 45.74"W	RSA-054/055	40.0	630.40	632.66	30.0-40.0	Overburden
RS020	EFF	34°37'31.66"N	86°38'22.77"W	RSA-060	26.0	556.36	570.56	10.0-21.0	Overburden
RS022	EFF	34°37'29.49"N	86°38'32.71"W	RSA-060	41.0	567.05	570.12	14.0-25.0	Overburden
RS197	EFF	34°37'36.97"N	86°38'36.23"W	RSA-060	52.2	574.78	576.50	39.0-49.0	Overburden
RS282	EFF	34°37'37.03"N	86°38'24.85"W	RSA-060	28.3	568.23	570.92	15.8-24.8	Overburden
RS285	BKG	34°37'44.14"N	86°38'34.66"W	RSA-060	43.5	572.87	575.25	31.0-40.0	Overburden
RS292	EFF	34°37'40.01"N	86°38'33.72"W	RSA-060	32.6	572.08	574.77	20.0-29.4	Overburden
RS552	EFF	34°37'29.88"N	86°38'32.58"W	RSA-060	62.0	569.90	572.61	52.0-62.0	Bedrock
RS555	EFF	34°37'32.45"N	86°38'33.60"W	RSA-060	47.0	573.10	575.94	37.0-47.0	Overburden
RS556	EFF	34°37'25.615"N	86°38'31.30"W	RSA-060	35.5	563.50	566.31	25.5-35.5	Interface
RS2723[4]	EFF	34°37'30.80"N	86°38'27.53"W	RSA-060	TBD	TBD	TBD	10.0-20.0	Overburden

Draft

TEST LOCATION	TYPE[1]	LATITUDE	LONGITUDE	UNIT(S) MONITORED	DEPTH (ft)	GROUND ELEVATION (ft. MSL)	TOP OF RISER ELEVATION (ft. MSL)	SCREENED INTERVAL (ft. bgs)	MONITORED ZONE[2]
RS2759[4]	EFF	34°37'35.41"N	86°38'35.07"W	RSA-060	TBD	TBD	TBD	15.0-25.0	Overburden
RS690	EFF	34° 37' 13.65"N	86° 36' 38.47"W	RSA-204	23.5	579.47	582.59	13.5 - 23.5	Overburden
RS691	EFF	34° 37' 17.50"N	086° 36' 35.04"W	RSA-204	22.0	577.53	580.64	12.0 - 22.0	Interface
RS1223	EFF	34° 37' 18.60"N	86° 36' 38.61"W	RSA-204	29.0	578.65	581.43	18.7 - 28.7	Interface
RS1550	EFF	34° 37' 21.73"N	86° 36' 35.61"W	RSA-204	26.0	575.04	575.28	16.0 - 26.0	Overburden
RS2027	EFF	34° 37' 21.09"N	86° 36' 40.47"W	RSA-204	34.7	580.94	583.40	24.3 - 34.3	Interface
RS2029	EFF	34° 37' 18.48"N	86° 36' 40.55"W	RSA-204	32.2	585.66	588.11	21.7 - 31.7	Interface
RS2030	EFF	34° 37' 13.79"N	86° 36' 36.26"W	RSA-204	24.2	581.54	584.12	13.8 - 23.8	Interface
RS2031	EFF	34° 37' 14.67"N	86° 36' 33.72"W	RSA-204	25.7	576.94	579.83	15.3 - 25.3	Interface
RS2032	EFF	34° 37' 18.92"N	86° 36' 35.04"W	RSA-204	32.5	577.66	576.91	22.1 - 32.1	Interface
RS2033	EFF	34° 37' 22.72"N	86° 36' 34.51"W	RSA-204	42.8	571.54	574.29	32.4 - 42.4	Interface
RS2034	EFF	34° 37' 22.84"N	86° 36' 37.54"W	RSA-204	24.6	576.73	579.13	14.2 - 24.2	Interface
RS2668	EFF	34° 37' 20.85"N	86° 36' 39.40"W	RSA-204	55	580.92	583.71	45 - 55	Bedrock
RS2670	EFF	34° 37' 16.15"N	86° 36' 36.89"W	RSA-204	50	579.45	582.23	40 - 50	Bedrock
RS2672	EFF	34° 37' 14.25"N	86° 36' 35.87"W	RSA-204	29.9	581.40	581.12	19.5 - 29.5	Interface
RS2673	EFF	34° 37' 15.16"N	86° 36' 36.59"W	RSA-204	27.2	582.14	582.05	16.8 - 26.8	Interface
RS2674	EFF	34° 37' 15.84"N	86° 36' 35.23"W	RSA-204	27.8	579.80	582.12	17.4 - 27.4	Interface
RS2675	EFF	34° 37' 16.24"N	86° 36' 36.60"W	RSA-204	30.3	579.17	581.99	19.9 - 29.9	Overburden
RS2676	EFF	34° 37' 17.46"N	86° 36' 37.23"W	RSA-204	20.5	578.89	581.06	10.1 - 20.1	Overburden
RS2677	EFF	34° 37' 19.12"N	86° 36' 38.21"W	RSA-204	29.5	578.31	580.75	19.1 - 29.1	Overburden

Draft

TEST LOCATION	TYPE[1]	LATITUDE	LONGITUDE	UNIT(S) MONITORED	DEPTH (ft)	GROUND ELEVATION (ft. MSL)	TOP OF RISER ELEVATION (ft. MSL)	SCREENED INTERVAL (ft. bgs)	MONITORED ZONE[2]
RS2678	EFF	34° 37' 20.02"N	086° 36' 37.65"W	RSA-204	28.4	578.348	580.788	18.0 - 28.0	Overburden
RS2683	EFF	34° 37' 21.49"N	086° 36' 39.73"W	RSA-204	28.8	579.491	581.813	18.4 - 28.4	Overburden
RS2791[4]	EFF	TBD	TBD	RSA-204	TBD	TBD	TBD	TBD	Interface
RS2792[4]	EFF	TBD	TBD	RSA-204	TBD	TBD	TBD	TBD	Bedrock
RS2793[4]	EFF	TBD	TBD	RSA-204	TBD	TBD	TBD	TBD	Interface
RS2794[4]	EFF	TBD	TBD	RSA-204	TBD	TBD	TBD	TBD	Bedrock
RS2874[4]	EFF	TBD	TBD	RSA-204	TBD	TBD	TBD	TBD	Interface
RS065	BDY	34°40'58.86"N	86°36'41.71"W	Facility-Wide	58.0	596.85	597.98	43.0-58.0	Interface
RS066	BDY	34°40' 02.80"N	86°36' 38.08"W	Facility-Wide	47.0	583.98	583.98	32.0-47.0	Interface
RS961	BDY	34°37'37.52"N	86°35'22.155"W	Facility-Wide	45.5	566.46	568.92	35.5-45.5	Interface
RS1111	BDY	34° 41' 46.97"N	86° 41' 58.25"W	Facility-Wide	25.0	605.75	608.36	15.0-25.0	Overburden
RS1114	BDY	34° 41' 00.30"N	86° 42' 52.73"W	Facility-Wide	61.0	598.59	601.27	50.6 – 60.6	Overburden
RS1121	BDY	34° 39' 42.59"N	86° 42' 50.81"W	Facility-Wide	16.0	584.49	587.36	5.6-15.6	Overburden
RS1153 EP[3]- 3	BDY	34° 34' 17.14"N	86° 40' 20.69"W	Facility-Wide	45.0	564.95	567.61	34.6-44.6	Interface
RS1159 EP[3]- 5	BDY	34° 35' 3.22"N	86° 36' 8.30"W	Facility-Wide	40.6	565.21	567.69	25.0-40.0	Interface
RS1353	BDY	34° 38' 43.58"N	86° 42' 35.94"W	Facility-Wide	36.0	581.39	584.01	25.8-35.8	Overburden
RS1414	BDY	34°41'27.246"N	86°42'44.679"W	Facility-Wide	85.0	643.30	645.47	75.0-85.0	Interface
RS1419	BDY	34°41'0.625"N	86°37'18.301"W	Facility-Wide	25.0	578.34	580.56	10.0-25.0	Overburden
RS1523	BDY	34° 37' 02.71"N	86° 35' 12.16"W	Facility-Wide	22.0	568.09	571.10	11.8 – 21.8	Interface
RS1527 (off site)	BDY	34° 36' 38.96"N	86° 35' 14.10"W	Facility-Wide	21.0	567.38	570.80	11.0 – 21.0	Interface

Draft

TEST LOCATION	TYPE[1]	LATITUDE	LONGITUDE	UNIT(S) MONITORED	DEPTH (ft)	GROUND ELEVATION (ft. MSL)	TOP OF RISER ELEVATION (ft. MSL)	SCREENED INTERVAL (ft. bgs)	MONITORED ZONE[2]
RS1711	BDY	34°36'9.326"N	86°35'15.345"W	Facility-Wide	54.0	565.72	568.23	44.0 – 54.0	Interface
MSW13	BDY	34°41'48.127"N	86°41'56.881"W	Facility-Wide	0.0	NA	NA	NA	Surface water
MSW14	BDY	34°42'32.59"N	86°38'21.466"W	Facility-Wide	0.0	NA	NA	NA	Surface water
MSW16	BDY	34°39'40.587"N	86°36'17.672"W	Facility-Wide	0.0	NA	NA	NA	Surface water
MSW18a	BDY	34°37'18.974"N	86°35'15.024"W	Facility-Wide	0.0	NA	NA	NA	Surface water
INCRK-01	BDY	34°34'54.971"N	86°43'47.586"W	Facility-Wide	0.0	556.00	NA	NA	Surface water
OFF-SW27 (off site)	BDY	34°35'48.045"N	86°35'9.743"W	Facility-Wide	0.0	NA	NA	NA	Surface water
P-SW11	BDY	34°34'21.525"N	86°40'20.909"W	Facility-Wide	0.0	556.00	NA	NA	Surface water
RS065A	BDY	34°40'46.52"N	86°36'37.19"W	Facility-Wide Bedrock	142.0	585.89	588.89	57.0 – 77.0 127.0-142.0	Bedrock
RS643	BDY	34°37' 29.87"N	86°35' 21.23"W	Facility-Wide Bedrock	56.0	577.66	580.11	44.7 – 55.1	Bedrock
RS1148 EP[3]- 1	BDY	34°35' 21.629"N	86° 41' 28.22"W	Facility-Wide Bedrock	194.0	565.09	568.07	182.3-192.3	Bedrock
RS1149 EP[3]- 1	BDY	34° 35' 21.65"N	86° 41' 28.31"W	Facility-Wide Bedrock	274.4	565.23	567.80	259.4-274.4	Bedrock
RS1151 EP[3]- 2	BDY	34° 35' 00.22"N	86° 40' 39.41"W	Facility-Wide Bedrock	235.5	560.22	565.00	225.0-235.0	Bedrock
RS1152 EP[3]- 2	BDY	34° 35' 00.11"N	86° 40' 39.24"W	Facility-Wide Bedrock	300.3	560.16	564.79	270.0-285.0	Bedrock
RS1154 EP[3]- 3	BDY	34°34'17.042"N	86°40'20.77"W	Facility-Wide Bedrock	191.0	565.06	567.73	176.0-191.0	Bedrock
RS1157 EP[3]- 4	BDY	34° 34' 41.19"N	86° 37' 00.55"W	Facility-Wide Bedrock	200.3	562.99	565.43	190.0-200.0	Bedrock
RS1158 EP[3]- 4	BDY	34° 34' 41.30"N	86° 37' 00.48"W	Facility-Wide Bedrock	327.8	562.81	565.34	316.0-326.0	Bedrock
RS1160 EP[3]- 5	BDY	34° 35' 03.17"N	86° 36' 08.41"W	Facility-Wide Bedrock	205.5	565.24	567.85	195.5-205.5	Bedrock
RS1164 EP[3]- 6	BDY	34° 35' 7.55"N	86° 35' 16.45"W	Facility-Wide Bedrock	278.8	563.31	566.47	268.8-278.8	Bedrock

Draft

TEST LOCATION	TYPE[1]	LATITUDE	LONGITUDE	UNIT(S) MONITORED	DEPTH (ft)	GROUND ELEVATION (ft. MSL)	TOP OF RISER ELEVATION (ft. MSL)	SCREENED INTERVAL (ft. bgs)	MONITORED ZONE[2]
RS1167	BDY	34° 38' 15.09"N	86° 36' 08.57"W	Facility-Wide Bedrock	198.0	566.36	568.28	182.2-192.2	Bedrock
RS1294 EP[4]- 6	BDY	34° 35' 07.73"N	86° 35' 16.61"W	Facility-Wide Bedrock	119.5	563.29	565.85	109.0-119.0	Bedrock
RS1413S	BDY	34°41'47.371"N	86°41'54.903"W	Facility-Wide Bedrock	175.0	609.56	612.28	90.0-120.0	Nested Bedrock
RS1413D	BDY	34°41'47.371"N	86°41'54.903"W	Facility-Wide Bedrock	175.0	609.56	612.28	155.0-175.0	Nested Bedrock
RS1416	BDY	34°42'33.373"N	86°39'3.342"W	Facility-Wide Bedrock	56.0	683.69	685.69	36.0-56.0	Bedrock
RS1418	BDY	34°42'32.778"N	86°38'25.385"W	Facility-Wide Bedrock	92.0	629.14	631.32	82.0-92.0	Bedrock
RS1483	BDY	34°41'27.095"N	86°42'44.787"W	Facility-Wide Bedrock	101.0	642.52	644.76	91.0-101.0	Bedrock
RS1486c	BDY	34°42'33.373"N	86°39'3.342"W	Facility-Wide Bedrock	258.0	683.30	685.65	144.0-154.5	CMT Bedrock
RS1488d	BDY	34°42'32.817"N	86°38'25.297"W	Facility-Wide Bedrock	125.0	628.99	631.63	121.5-124.5	CMT Bedrock
RS1489e	BDY	34°41'0.625"N	86°37'18.301"W	Facility-Wide Bedrock	200.0	578.75	581.18	184.5-197.0	CMT Bedrock
RS1514S	BDY	34° 37' 16.10"N	86° 35' 30.17"W	Facility-Wide Bedrock	150.0	569.55	572.07	121.0-126.0	Nested Bedrock
RS1514D	BDY	34° 37' 16.10"N	86° 35' 30.17"W	Facility-Wide Bedrock	150.0	569.55	572.07	144.0-149.0	Nested Bedrock
RS1518a	BDY	34° 37' 02.71"N	86° 35' 12.12"W	Facility-Wide Bedrock	240.0	567.67	570.15	55.5-61.0	FLUTe Bedrock
RS1518b	BDY	34° 37' 02.71"N	86° 35' 12.12"W	Facility-Wide Bedrock	240.0	567.67	570.15	83.0-89.0	FLUTe Bedrock
RS1518c	BDY	34° 37' 02.71"N	86° 35' 12.12"W	Facility-Wide Bedrock	240.0	567.67	570.15	100.0-110.0	FLUTe Bedrock
RS1518d	BDY	34° 37' 02.71"N	86° 35' 12.12"W	Facility-Wide Bedrock	240.0	567.67	570.15	152.0-163.0	FLUTe Bedrock
RS1518e	BDY	34° 37' 02.71"N	86° 35' 12.12"W	Facility-Wide Bedrock	240.0	567.67	570.15	213.0-229.0	FLUTe Bedrock
RS1520a	BDY	34° 36' 22.62"N	86° 35' 16.66"W	Facility-Wide Bedrock	260.0	569.09	571.76	67.0 – 75.0	FLUTe Bedrock
RS1520b	BDY	34° 36' 22.62"N	86° 35' 16.66"W	Facility-Wide Bedrock	260.0	569.09	571.76	99.0-113.0	FLUTe Bedrock
RS1520c	BDY	34° 36' 22.62"N	86° 35' 16.66"W	Facility-Wide Bedrock	260.0	569.09	571.76	130.0-143.0	FLUTe Bedrock

Draft

TEST LOCATION	TYPE[1]	LATITUDE	LONGITUDE	UNIT(S) MONITORED	DEPTH (ft)	GROUND ELEVATION (ft. MSL)	TOP OF RISER ELEVATION (ft. MSL)	SCREENED INTERVAL (ft. bgs)	MONITORED ZONE[2]
RS1520d	BDY	34° 36' 22.62"N	86° 35' 16.66"W	Facility-Wide Bedrock	260.0	569.09	571.76	164.0-175.0	FLUTe Bedrock
RS1520e	BDY	34° 36' 22.62"N	86° 35' 16.66"W	Facility-Wide Bedrock	260.0	569.09	571.76	210.0-214.0	FLUTe Bedrock
RS1520f	BDY	34° 36' 22.62"N	86° 35' 16.66"W	Facility-Wide Bedrock	260.0	569.09	571.76	230.5-244.5	FLUTe Bedrock
RS1522S (off site)	BDY	34° 36' 39.14"N	86° 35' 14.43"W	Facility-Wide Bedrock	182.0	567.56	570.06	100.0-110.0	Nested Bedrock
RS1522D (off site)	BDY	34° 36' 39.14"N	86° 35' 14.43"W	Facility-Wide Bedrock	182.0	567.56	570.06	172.0-182.0	Nested Bedrock
RS1534a	BDY	34° 35' 50.22"N	86° 35' 24.43"W	Facility-Wide Bedrock	260.0	574.68	577.36	99.5-103.5	FLUTe Bedrock
RS1534b	BDY	34° 35' 50.22"N	86° 35' 24.43"W	Facility-Wide Bedrock	260.0	574.68	577.36	127.3-134.3	FLUTe Bedrock
RS1534c	BDY	34° 35' 50.22"N	86° 35' 24.43"W	Facility-Wide Bedrock	260.0	574.68	577.36	182.2-186.2	FLUTe Bedrock
RS1534d	BDY	34° 35' 50.22"N	86° 35' 24.43"W	Facility-Wide Bedrock	260.0	574.68	577.36	218.6-225.9	FLUTe Bedrock
RS1534e	BDY	34° 35' 50.22"N	86° 35' 24.43"W	Facility-Wide Bedrock	260.0	574.68	577.36	235.0-235.9	FLUTe Bedrock
RS1534f	BDY	34° 35' 50.22"N	86° 35' 24.43"W	Facility-Wide Bedrock	260.0	574.68	577.36	252.0-257.0	FLUTe Bedrock
RS1673a	BDY	34° 40' 59.57"N	86° 37' 37.65"W	Facility-Wide Bedrock	125.0	595.82	597.48	72.9 – 77.9	Bedrock
RS1675S	BDY	34°39'27.698"N	86°36'41.371"W	Facility-Wide Bedrock	171.0	567.42	569.77	102.0-117.0	Nested Bedrock
RS1675D	BDY	34°39'27.698"N	86°36'41.371"W	Facility-Wide Bedrock	171.0	567.42	569.77	161.0-171.0	Nested Bedrock
RS1779	BDY	34° 41' 00.44"N	86° 42' 52.97"W	Facility-Wide Bedrock	121.0	600.69	603.19	116.0-121.0	Bedrock
RS1783S	BDY	34° 38' 08.09"N	86° 42' 32.72"W	Facility-Wide Bedrock	122.0	584.20	586.61	44.0 – 54.0	Nested Bedrock
RS1783D	BDY	34° 38' 08.09"N	86° 42' 32.72"W	Facility-Wide Bedrock	122.0	584.20	586.61	117.0-122.0	Nested Bedrock
RS1785S	BDY	34° 36' 36.12"N	86° 42' 31.56"W	Facility-Wide Bedrock	120.0	560.86	563.31	38.5 – 48.5	Nested Bedrock
RS1785D	BDY	34° 36' 36.12"N	86° 42' 31.56"W	Facility-Wide Bedrock	120.0	560.86	563.31	110.0-120.0	Nested Bedrock
RS1786S	BDY	34° 35' 46.68"N	86° 43' 14.14"W	Facility-Wide Bedrock	190.0	571.66	574.26	38.0 – 48.0	Nested Bedrock

Draft

TEST LOCATION	TYPE[1]	LATITUDE	LONGITUDE	UNIT(S) MONITORED	DEPTH (ft)	GROUND ELEVATION (ft. MSL)	TOP OF RISER ELEVATION (ft. MSL)	SCREENED INTERVAL (ft. bgs)	MONITORED ZONE[2]
RS1786D	BDY	34° 35' 46.68"N	86° 43' 14.14"W	Facility-Wide Bedrock	190.0	571.66	574.26	178.0-188.0	Nested Bedrock
RS1806a	BDY	34° 33' 20.19"N	86° 39' 07.77"W	Facility-Wide Bedrock	257.0	567.86	570.15	51.0 – 64.0	FLUTe Bedrock
RS1806b	BDY	34° 33' 20.19"N	86° 39' 07.77"W	Facility-Wide Bedrock	257.0	567.86	570.15	96.0-101.0	FLUTe Bedrock
RS1806c	BDY	34° 33' 20.19"N	86° 39' 07.77"W	Facility-Wide Bedrock	257.0	567.86	570.15	248.0-257.0	FLUTe Bedrock

[1] Well Type:
POC - Point of Compliance Well
EFF - Effectiveness Monitoring Well
BDY – Boundary Well
BKG – Background Well
UPG – Upgradient Well

[2] Monitored Zone:
Interface – Well screened across the overburden and bedrock
CMT - Continuous Multichannel Tubing, multi-screened well in a single borehole
FLUTe – Flexible Liner Underground Technologies, multi-screened well in a single borehole
Nested – Two separate wells in a single borehole

[3] – EP – Exit Pathway Well Clusters along southern boundary
[4] – Proposed new long term monitoring well. For RSA-060, the proposed location and screened interval are shown. The proposed well designation is provided for RSA-204. The well is to be installed during corrective measures activities at the site. Monitoring at this location will be in accordance with permit condition VII.E.3.a.

Draft

TABLE VII.2

GROUNDWATER QUALITY MONITORING CONSTITUENTS*

UNIT*	HAZARDOUS CONSTITUENT
RSA-049	Arsenic
	Mercury
	Carbon Tetrachloride
	Trichloroethene (TCE)
RSA-053	Chlorobenzene
	Benzene
	4,4'-DDD
	4,4'-DDE
	4,4'-DDT
	Aldrin
	Alpha-BHC
	Alpha-Chlordane
	Beta-BHC
	Delta-BHC
	Dieldrin
	Endosulfan I
	Endosulfan II
	Endosulfan Sulfate
	Endrin
	Endrin Aldehyde
	Endrin Ketone
	Gamma-BHC (Lindane)
	Gamma-Chlordane
	Heptachlor
	Heptachlor Epoxide
	Methoxychlor
	Toxaphene
RSA-054/055	VOCs[1]
	SVOCs[2]
	Pesticides[5]
	TAL Metals[3]
	Trichlorotrifluoroethane
	Methyl Acetate
	Cyclohexane
	1,3-Dichloropropene
	2-Hexanone
	1,2-Dibromo-3-Chloropropane
	Benzaldehyde
	Acetophenone
	2-Nitrophenol

Draft

UNIT*	HAZARDOUS CONSTITUENT
RSA-054/055	Bis(2-Chloroethoxy)Methane
	Hexachlorobutadiene
	Caprolactam
	1,1-Biphenyl
	Fluorine
	4,6-Dinitro-2-Methylphenol
	4-Nitroaniline
	Atrazine
	Dibenz(a,h)Anthracene
	Aldrin
	Alpha-Chlordane
	Delta-BHC
	Endosulfan I
	Endosulfan II
	Endosulfan Sulfate
	Endrin Aldehyde
	Endrin Ketone
	Gamma-Chlordane
RSA-060	Arsenic
	Cadmium
	Iron
	Manganese
	1,4,6-trinitrotoluene
	2-nitrotoluene
	4,4’-DDD
	4,4’-DDE
	4,4’-DDT
	Aldrin
	Alpha-BHC
	Beta-BHC
	Dieldrin
	4-chloroaniline
	1,1,2,2-tetrachloroethane
	1,1-dichloroethene
	cis 1,2-dichloroethene
	Benzene
	Chlorobenzene
	Tetrachloroethene
	Trichloroethene
	Vinyl Chloride

Draft

UNIT*	HAZARDOUS CONSTITUENT
RSA-204	VOCs[1]
	Perchlorate
	Energetics[6]
OB and OD	Energetics[6]
	TAL Metals[3]
	SVOCs[2]
	PAHs[4]
	Perchlorate
	VOCs[1]
Facility-Wide	Energetics[6]
	TAL Metals[3]
	Perchlorate
	SVOCs[2]
	PAHs[4]
	PCBs[7]
	Pesticides[5]
	VOCs[1]
Facility-Wide Bedrock	Energetics[6]
	TAL Metals[3]
	Perchlorate
	SVOCs[2]
	PAHs[4]
	PCBs[7]
	Pesticides[5]
	VOCs[1]

* Identifies the unit(s) at which the given constituent must be monitored.

1. VOCs shall include the following: acetone, acetonitrile, acrolein, acrylonitrile, aldrin, allyl chloride, benzene, bromodichloromethane (THM), bromoform (tribromomethane) (THM), bromomethane (methyl bromide), 2-butanone (methyl ethyl ketone), sec-butylbenzene, tert-butylbenzene, carbon disulfide, carbon tetrachloride, chlorobenzene (monochlorobenzene), chloroethane, chloroform (THM), chloromethane (methyl chloride), 2-chlorotoluene (o-chlorotoluene), dibromochloromethane (THM), 1,2-dibromo-3-chloropropane (DBCP), 1,2-dibromoethane (ethylene dibromide or edb), 1,3-dichlorobenzene (m-dichlorobenzene), dichlorodifluoromethane, 1,1-dichloroethane, 1,2-dichloroethane (EDC), 1,2-dichloroethene-(cis), 1,2-dichloroethene-(trans), 1,1-dichloroethene, 1,2-dichloropropane, 1,3-dichloropropene-(cis), 1,3-dichloropropene-(trans), ethylbenzene, formaldehyde, isobutyl alcohol (isobutanol), isopropylbenzene (cumene), methanol, methylene chloride (dichloromethane), 4-methyl-2-pentanone (methyl isobutyl ketone) , methyl-tert-butyl-ether (MTBE), styrene, 1,1,1,2-tetrachloroethane, 1,1,2,2-tetrachloroethane, tetrachloroethene (PCE), toluene, 1,1,1-trichloroethane, 1,1,2-trichloroethane, trichloroethene (TCE), trichlorofluoromethane, 1,2,3-trichloropropane, 1,2,4-trimethylbenzene, 1,3,5-trimethylbenzene, vinyl acetate, vinyl chloride, xylenes (total).

2. SVOCs shall include the following: acenaphthene, acenaphthylene, aniline, anthracene, azobenzene, benzidine, benzo(a)anthracene, benzo(a)pyrene, benzo(b)fluoranthene, benzo(g,h,i)perylene,

Draft

benzo(k)fluoranthene, benzoic acid, benzyl alcohol, bis(2-chloroethyl)ether, bis(2-chloroisopropyl)ether (2,2-oxybis(1-chloropropane)), bis(2-ethylhexyl)phthalate (DEHP), butyl benzyl phthalate, carbazole, 4-chloroaniline, chlorobenzilate, chloro-m-cresol, p- (4-chloro-3-methylphenol), 2-chloronaphthalene (beta-chloronaphthalene), 2-chlorophenol, 3-chlorophenol (m-chlorophenol), chrysene, di (2-ethylhexyl) adipate, dichloroacetic acid, di-n-butyl phthalate (dibutyl phthalate), di-n-octyl phthalate (dioctyl phthalate), dibenzo(a,h)anthracene, dibenzofuran, 1,2-dichlorobenzene (o-dichlorobenzene), 1,4-dichlorobenzene (p-dichlorobenzene), 3,3-dichlorobenzidine, 2,4-dichlorophenol, diethyl phthalate, 2,4-dimethylphenol, 2,6-dimethylphenol, 3,4-dimethylphenol, dimethyl phthalate, 2,4-dinitrophenol, 2,4-dinitrotoluene, 2,6-dinitrotoluene, fluoranthene, fluorene, hexachlorobenzene, hexachlorobutadiene, hexachlorocyclopentadiene, hexachloroethane, HMX (octahydro-1,3,5,7-tetranitro-1,3,5,7-tetrazocine) , indeno(1,2,3-cd)pyrene, isophorone, 2-methylnaphthalene, methyl parathion, 2-methylphenol (o-cresol), 3-methylphenol (m-cresol), 4-methylphenol (p-cresol), monochloroacetic acid, naphthalene, n-nitroso-di-n-propylamine, n-nitrosodimethylamine, n-nitrosodiphenylamine, 2-nitroaniline, nitrobenzene, 4-nitrophenol (p-nitrophenol), parathion, pentachlorobenzene, pentachlorophenol, phenanthrene, phenol, propylene glycol, pyrene, RDX (hexahydro-1,3,5-trinitro-1,3,5-triazine), 2,3,4,6-tetrachlorophenol, tetrahydrofuran, trichloroacetic acid, 1,2,4-trichlorobenzene, 2,4,5-trichlorophenol, 2,4,6-trichlorophenol, 1,3,5-trinitrobenzene, trinitrophenylmethylnitramine, 2,4,6-trinitrotoluene

3. TAL Metals shall include the following: Aluminum, Antimony, Arsenic, Barium, Beryllium, Cadmium, Calcium, Chromium, Cobalt, Copper, Iron, Lead, Magnesium, Manganese, Mercury, Nickel, Potassium, Selenium, Silver, Sodium, Thallium, Vanadium and Zinc.

4. PAHs shall include the following: acenaphthene, acenaphthylene, anthracene, benzo(a)anthracene, benzo(a)pyrene, benzo(b)fluoranthene, benzo(g,h,i)perylene, benzo(k)fluoranthene, bis(2-chloroethyl)ether, bis(2-ethylhexyl)phthalate, butyl benzyl phthalate, carbazole, 4-chloroaniline, 2-chlorophenol, chrysene, dibenzo(a,h)anthracene, 1,2-dichlorobenzene (o-dichlorobenzene), 1,4-dichlorobenzene (p-dichlorobenzene), 3,3-dichlorobenzidine, 2,4-dichlorophenol, diethyl phthalate, 2,4-dimethylphenol, di-n-butyl phthalate (dibutyl phthalate), 2,4-dinitrophenol, 2,4-dinitrotoluene, 2,6-dinitrotoluene, di-n-octyl phthalate (dioctyl phthalate), fluoranthene, fluorene, hexachlorobenzene, hexachlorobutadiene, hexachlorocyclopentadiene, hexachloroethane, indeno(1,2,3-cd)pyrene, isophorone, 2-methylnaphthalene, 2-methylphenol (o-cresol), naphthalene, nitrobenzene, n-nitroso di-n-propylamine, n-nitrosodiphenylamine, pentachlorophenol, phenanthrene, phenol, pyrene, 1,2,4-trichlorobenzene, 2,4,5-trichlorophenol and 2,4,6-trichlorophenol.

5. Pesticides shall include the following: alachlor, aldicarb, aldicarb sulfone, aldicarb sulfoxide, aldrin, atrazine, carbofuran, chlordane, chlorobenzilate, chlorpyrifos, 4,4' - DDD, 4,4' - DDE, 4,4' - DDT, diallate, 2,4-dichlorophenoxyacetic acid (2,4-d), dieldrin, dimethoate, 2,4-dinitro-6-sec-butylphenol (dinoseb), diquat, disulfoton, endosulfan , endothall, endrin, glyphosate, HCH (alpha) (alpha - BHC), HCH (beta) (beta - BHC), HCH (gamma) Lindane (gamma - BHC), heptachlor, heptachlor epoxide, kepone, malathion, methoxychlor, oxamyl (vydate), phorate, picloram, pronamide, simazine, sulfotep (tetraethyldithiopyrophosphate) and toxaphene.

6. Energetics shall include 1,3,5-Trinitrobenze (TNB); 1,3-Dinitrobenzene (DNB); 2,4,6-Trinitrotoluene (TNT); 2,4 and 2,6-Dinitrotoluene (DNT); Octahydro-1,3,5,7-tetranitro-1,3,5,7-tetrazocine or High Melting point Explosive (HMX); 2-Nitrotoluene (NT), 3-NT and 4-NT; 4-Amino-2,6-DNT; 2 Amino-4,6-DNT; Tetryl; Nitrobenzene (NB); Pentaerythritol tetranitrate (PETN); and Cyclotrimethylenetrinitramine or Research Department Explosive or Royal Demolition Explosive (RDX)

Draft

7. PCBs shall include Aroclor 1016, Aroclor 1221, Aroclor1232, Aroclor 1242, Aroclor 1248, Aroclor 1254, Aroclor 1260, Aroclor 5460, 2,3,3’,4,4’,5,5’-Heptachlorobiphenyl (PCB 189), 2,3’,4,4’,5,5’-Hexachlorobiphenyl (PCB 167), 2,3,3’,4,4’,5’- Hexachlorobiphenyl (PCB 157), 2,3,3’,4,4’,5-Hexachlorobiphenyl (PCB 156), 3,3’,4,4’,5,5’- Hexachlorobiphenyl (PCB 169), 2’,3,4,4’,5-Pentachlorobiphenyl (PCB 123), 2,3’,4,4’,5- Pentachlorobiphenyl (PCB 118), 2,3,3’,4,4’-Pentachlorobiphenyl (PCB 105), 2,3,4,4’,5- Pentachlorobiphenyl (PCB 114), 3,3’,4,4’,5-Pentachlorobiphenyl (PCB 126), 3,3’,4,4’-Tetrachlorobiphenyl (PCB 77) and 3,4,4’,5-Tetrachlorobiphenyl (PCB 81)

Draft

TABLE VII.3

GROUNDWATER PROTECTION STANDARD

UNIT[1]	HAZARDOUS CONSTITUENT	MAXIMUM CONCENTRATION LIMIT (µg/L)[2]
OB and OD	Energetics[10]	Background
	TAL Metals[4]	Background
	SVOCs[5]	Background
	PAHs[8]	Background
	Perchlorate	See Note 3
	VOCs[6]	Background
	Appendix IX constituents (one event)	Background
RSA-049	Arsenic	Background
	Mercury	Background
	Carbon Tetrachloride	Background
	Trichloroethene (TCE)	Background
RSA-053	Chlorobenzene	100
	Benzene	5
	4,4'-DDD	0.28
	4,4'-DDE	0.20
	4,4'-DDT	0.20
	Aldrin	0.00021
	Alpha-BHC	0.0062
	Alpha-Chlordane	2
	Beta-BHC	0.022
	Delta-BHC	0.27
	Dieldrin	0.0015
	Endosulfan I	7.8
	Endosulfan II	7.8
	Endosulfan Sulfate	7.8
	Endrin	2
	Endrin Aldehyde	0.17
	Endrin Ketone	0.17
	Gamma-BHC (Lindane)	0.2
	Gamma-Chlordane	2
	Heptachlor	0.4
	Heptachlor Epoxide	0.2

Draft

TABLE VII.3 (con't)

UNIT[1]	HAZARDOUS CONSTITUENT	MAXIMUM CONCENTRATION LIMIT (µg/L)[2]
RSA-053	Methoxychlor	40
	Toxaphene	3
RSA-054/055	VOCs[6]	EPA RSLs[9]
	SVOCs[5]	EPA RSLs[9]
	Pesticides[7]	EPA RSLs[9]
	TAL Metals[4]	EPA RSLs[9]
	Trichlorotrifluoroethane	530
	Methyl Acetate	1600
	Cyclohexane	5.3
	1,3-Dichloropropene	0.41
	2-Hexanone	3.4
	1,2-Dibromo-3-Chloropropane	0.2
	Benzaldehyde	150
	Acetophenone	150
	2-Nitrophenol	60
	Bis(2-Chloroethoxy)Methane	4.6
	Hexachlorobutadiene	0.26
	Caprolactam	770
	1,1-Biphenyl	0.83
	Fluorine	4000
	4,6-Dinitro-2-Methylphenol	0.12
	4-Nitroaniline	3.3
	Atrazine	3
	Dibenz(a,h)Anthracene	0.0029
	Aldrin	0.004
	Alpha-Chlordane	2
	Delta-BHC	0.27
	Endosulfan I	7.8
	Endosulfan II	7.8
	Endosulfan Sulfate	7.8
	Endrin Aldehyde	0.17
	Endrin Ketone	0.17
	Gamma-Chlordane	2
RSA-060	Arsenic	10
	Cadmium	5
	Iron	1100
	Manganese	32
	2,4,6-Trinitrotoluene	0.76
	2-Nitrotoluene	0.27

Draft

UNIT[1]	HAZARDOUS CONSTITUENT	MAXIMUM CONCENTRATION LIMIT (µg/L)[2]
RSA-060	4,4'-DDD	0.28
	4,4'-DDE	0.20
	4,4'-DDT	0.20
	Aldrin	0.004
	Alpha-BHC	0.0062
	Beta-BHC	0.022
	Dieldrin	0.0015
	4-Chloroaniline	0.32
	1,1,2,2-Tetrachloroethane	0.066
	1,1-dichloroethene	7
	cis 1,2-Dichloroethene	70
	Benzene	5
	Chlorobenzene	100
	Tetrachloroethene	5
	Trichloroethene	5
	Vinyl Chloride	2
RSA-204	VOCs[6]	EPA RSLs[9]
	Perchlorate	See Note 3
	Energetics[10]	EPA RSLs[9]
Facility-Wide	Energetics[10]	EPA RSLs[9]
	TAL Metals[4]	EPA RSLs[9]
	Perchlorate	See Note 3
	SVOCs[5]	EPA RSLs[9]
	PAHs[8]	EPA RSLs[9]
	Pesticides[7]	EPA RSLs[9]
	PCBs[11]	EPA RSLs[9]
	VOCs[6]	EPA RSLs[9]
Facility-Wide Bedrock	Energetics[10]	EPA RSLs[9]
	Perchlorate	See Note 3
	VOCs[6]	EPA RSLs[9]
	TAL Metals[4]	EPA RSLs[9]
	SVOCs[5]	EPA RSLs[9]
	PAHs[8]	EPA RSLs[9]
	Pesticides[7]	EPA RSLs[9]
	PCBs[11]	EPA RSLs[9]

Notes:

1. Identifies the unit(s) at which the given constituent must be monitored.

Draft

2. Drinking Water Standards and Health Advisories, USEPA MCL (latest edition). Background values are the calculated site-specific background concentration in accordance with ADEM Admin. Code R.335-14-5-Appendix IV. MDL must not exceed established MCL (Maximum Concentration Limit) regulatory levels. Where Background values do not exist, the values listed in the most recent US EPA Regional Screening Level (RSL) Table, using a Hazard Quotient (HQ) of 0.1 shall be referenced.

3. Perchlorate is not listed as a hazardous constituent in Appendix IX; however, it is a constituent of concern for RSA and shall be included in the groundwater protection standards. A background level for perchlorate does not exist; therefore, the standard listed in the most recent US EPA RSL Table, using a HQ of 0.1 shall be referenced.

4. TAL Metals shall include the following: Aluminum, Antimony, Arsenic, Barium, Beryllium, Cadmium, Calcium, Chromium, Cobalt, Copper, Iron, Lead, Magnesium, Manganese, Mercury, Nickel, Potassium, Selenium, Silver, Sodium, Thallium, Vanadium and Zinc.

5. SVOCs shall include the following: acenaphthene, acenaphthylene, aniline, anthracene, azobenzene, benzidine, benzo(a)anthracene, benzo(a)pyrene, benzo(b)fluoranthene, benzo(g,h,i)perylene, benzo(k)fluoranthene, benzoic acid, benzyl alcohol, bis(2-chloroethyl)ether, bis(2-chloroisopropyl)ether (2,2-oxybis(1-chloropropane)), bis(2-ethylhexyl)phthalate (DEHP), butyl benzyl phthalate, carbazole, 4-chloroaniline, chlorobenzilate, chloro-m-cresol, p- (4-chloro-3-methylphenol), 2-chloronaphthalene (beta-chloronaphthalene), 2-chlorophenol, 3-chlorophenol (m-chlorophenol), chrysene, di (2-ethylhexyl) adipate, dichloroacetic acid, di-n-butyl phthalate (dibutyl phthalate), di-n-octyl phthalate (dioctyl phthalate), dibenzo(a,h)anthracene, dibenzofuran, 1,2-dichlorobenzene (o-dichlorobenzene), 1,4-dichlorobenzene (p-dichlorobenzene), 3,3-dichlorobenzidine, 2,4-dichlorophenol, diethyl phthalate, 2,4-dimethylphenol, 2,6-dimethylphenol, 3,4-dimethylphenol, dimethyl phthalate, 2,4-dinitrophenol, 2,4-dinitrotoluene, 2,6-dinitrotoluene, fluoranthene, fluorene, hexachlorobenzene, hexachlorobutadiene, hexachlorocyclopentadiene, hexachloroethane, HMX (octahydro-1,3,5,7-tetranitro-1,3,5,7-tetrazocine) , indeno(1,2,3-cd)pyrene, isophorone, 2-methylnaphthalene, methyl parathion, 2-methylphenol (o-cresol), 3-methylphenol (m-cresol), 4-methylphenol (p-cresol), monochloroacetic acid, naphthalene, n-nitroso di-n-propylamine, n-nitrosodimethylamine, n-nitrosodiphenylamine, 2-nitroaniline, nitrobenzene, 4-nitrophenol (p-nitrophenol), parathion, pentachlorobenzene, pentachlorophenol, phenanthrene, phenol, propylene glycol, pyrene, RDX (hexahydro-1,3,5-trinitro-1,3,5-triazine), 2,3,4,6-tetrachlorophenol, tetrahydrofuran, trichloroacetic acid, 1,2,4-trichlorobenzene, 2,4,5-trichlorophenol, 2,4,6-trichlorophenol, 1,3,5-trinitrobenzene, trinitrophenylmethylnitramine and 2,4,6-trinitrotoluene. Where background values do not exist, the values listed in the most recent US EPA RSL Table, using a HQ of 0.1 shall be referenced.

6. VOCs shall include the following: acetone, acetonitrile, acrolein, acrylonitrile, aldrin, allyl chloride, benzene, bromodichloromethane (THM), bromoform (tribromomethane) (THM), bromomethane (methyl bromide), 2-butanone (methyl ethyl ketone), sec-butylbenzene, tert-butylbenzene, carbon disulfide, carbon tetrachloride, chlorobenzene (monochlorobenzene), chloroethane, chloroform (THM), chloromethane (methyl chloride), 2-chlorotoluene (o-chlorotoluene), dibromochloromethane (THM), 1,2-dibromo-3-chloropropane (DBCP), 1,2-dibromoethane (ethylene dibromide or edb), 1,3-dichlorobenzene (m-dichlorobenzene), dichlorodifluoromethane, 1,1-dichloroethane, 1,2-dichloroethane (EDC), 1,2-dichloroethene-(cis), 1,2-dichloroethene-(trans), 1,1-dichloroethene, 1,2-dichloropropane, 1,3-dichloropropene-(cis), 1,3-dichloropropene-(trans), ethylbenzene, formaldehyde, isobutyl alcohol (isobutanol), isopropylbenzene (cumene), methanol, methylene chloride (dichloromethane), 4-methyl-2-pentanone (methyl isobutyl ketone) , methyl-tert-butyl-ether (MTBE), styrene, 1,1,1,2-tetrachloroethane, 1,1,2,2-tetrachloroethane, tetrachloroethene (PCE),

Draft

toluene, 1,2,4-trichlorobenzene, 1,1,1-trichloroethane, 1,1,2-trichloroethane, trichloroethene (TCE), trichlorofluoromethane, 1,2,3-trichloropropane, 1,2,4-trimethylbenzene, 1,3,5-trimethylbenzene, vinyl acetate, vinyl chloride and xylenes (total). Where background values do not exist, the values listed in the most recent US EPA RSL Table, using a HQ of 0.1 shall be referenced.

7. Pesticides shall include the following: alachlor, aldicarb, aldicarb sulfone, aldicarb sulfoxide, aldrin, atrazine, carbofuran, chlordane, chlorobenzilate, chlorpyrifos, 4,4' - DDD, 4,4' - DDE, 4,4' - DDT, diallate, 2,4-dichlorophenoxyacetic acid (2,4-d), dieldrin, dimethoate, 2,4-dinitro-6-sec-butylphenol (dinoseb), diquat, disulfoton, endosulfan , endothall, endrin, glyphosate, HCH (alpha) (alpha - BHC), HCH (beta) (beta - BHC), HCH (gamma) Lindane (gamma - BHC), heptachlor, heptachlor epoxide, kepone, malathion, methoxychlor, oxamyl (vydate), phorate, picloram, pronamide, simazine, sulfotep (tetraethyldithiopyrophosphate) and toxaphene. Where background values do not exist, the values listed in the most recent US EPA RSL Table, using a HQ of 0.1 shall be referenced.

8. PAHs shall include the following: acenaphthene, acenaphthylene, anthracene, benzo(a)anthracene, benzo(a)pyrene, benzo(b)fluoranthene, benzo(g,h,i)perylene, benzo(k)fluoranthene, bis(2-chloroethyl)ether, bis(2-ethylhexyl)phthalate, butyl benzyl phthalate, carbazole, 4-chloroaniline, 2-chlorophenol, chrysene, dibenzo(a,h)anthracene, 1,2-dichlorobenzene (o-dichlorobenzene), 1,4-dichlorobenzene (p-dichlorobenzene), 3,3-dichlorobenzidine, 2,4-dichlorophenol, diethyl phthalate, 2,4-dimethylphenol, di-n-butyl phthalate (dibutyl phthalate), 2,4-dinitrophenol, 2,4-dinitrotoluene, 2,6-dinitrotoluene, di-n-octyl phthalate (dioctyl phthalate), fluoranthene, fluorene, indeno(1,2,3-cd)pyrene, isophorone, 2-methylnaphthalene, 2-methylphenol (o-cresol), naphthalene, nitrobenzene, n-nitroso-di-n-propylamine, n-nitrosodiphenylamine, pentachlorophenol, phenanthrene, phenol, pyrene, 1,2,4-trichlorobenzene, 2,4,5-trichlorophenol and 2,4,6-trichlorophenol. Where background values do not exist, the values listed in the most recent US EPA RSL Table, using a HQ of 0.1 shall be referenced.

9. EPA RSLs are the values listed for Tap Water in the most recent US EPA Regional Screening Level (RSL) Table, using a Hazard Quotient (HQ) of 0.1.

10. Energetics shall include 1,3,5-Trinitrobenze (TNB); 1,3-Dinitrobenzene (DNB); 2,4,6-Trinitrotoluene (TNT); 2,4 and 2,6-Dinitrotoluene (DNT); Octahydro-1,3,5,7-tetranitro-1,3,5,7-tetrazocine or High Melting point Explosive (HMX); 2-Nitrotoluene (NT), 3-NT and 4-NT; 4-Amino-2,6-DNT; 2 Amino-4,6-DNT; Tetryl; Nitrobenzene (NB); Pentaerythritol tetranitrate (PETN); and Cyclotrimethylenetrinitramine or Research Department Explosive or Royal Demolition Explosive (RDX)

11. PCBs shal include Aroclor 1016, Aroclor 1221, Aroclor1232, Aroclor 1242, Aroclor 1248, Aroclor 1254, Aroclor 1260, Aroclor 5460, 2,3,3’,4,4’,5,5’-Heptachlorobiphenyl (PCB 189), 2,3’,4,4’,5,5’-Hexachlorobiphenyl (PCB 167), 2,3,3’,4,4’,5’- Hexachlorobiphenyl (PCB 157), 2,3,3’,4,4’,5-Hexachlorobiphenyl (PCB 156), 3,3’,4,4’,5,5’- Hexachlorobiphenyl (PCB 169), 2’,3,4,4’,5-Pentachlorobiphenyl (PCB 123), 2,3’,4,4’,5- Pentachlorobiphenyl (PCB 118), 2,3,3’,4,4’-Pentachlorobiphenyl (PCB 105), 2,3,4,4’,5- Pentachlorobiphenyl (PCB 114), 3,3’,4,4’,5-Pentachlorobiphenyl (PCB 126), 3,3’,4,4’-Tetrachlorobiphenyl (PCB 77) and 3,4,4’,5-Tetrachlorobiphenyl (PCB 81)

Draft

Table VII.4.

ADDITIONAL MONITORING PARAMETERS

PARAMETER	UNIT OF MEASURE	LOCATION
Temperature	Degrees, (°F or °C)	Field*
Conductivity	Mhos/cm	Field*
pH	Standard Units (S.U.)	Field*
Reduction oxidation potential	Millivolts (mV)	Field*
Dissolved Oxygen	Milligrams/liter (mg/l)	Field*
Turbidity	Nephelometric turbidity Units (NTU)	Field*

* To be submitted as raw data in the annual reports required by Permit Condition VII.B.6.b.

Draft

PART VIII

CORRECTIVE MEASURES IMPLEMENTATION

VIII.A. APPLICABILITY

The conditions of this Part apply to SWMUs and AOCs identified in Table VIII.1.

VIII.B. GENERAL CONDITIONS

1. The Permittee is required to perform corrective measures for the SWMUs and AOCs identified in Condition VIII.A. The approved remedy for these defined units, waterway areas, or land parcels includes any and all actions set forth in this permit and in the approved Interim Measures Plans, Corrective Measures Studies (CMSs), Corrective Measures Implementation (CMI) Plans, Records of Decision (RODs), Remedial Action Work Plans (RA WPs) and Land Use Control Remedial Design (LUC RD) Plans approved by the Department, as noted in Table VIII.1.

2. Remedial Cleanup Levels

   Upon approval, pursuant to the Condition VI.E, of the CMI Plan designating applicable cleanup level(s), the cleanup level(s) for the areas specific to the CMI Plan will be deemed to be a condition of this permit.

3. Groundwater Monitoring and Remediation

   Where required pursuant to Conditions VIII.B.1 and VIII.C of this permit, the Permittee shall comply with the general groundwater monitoring requirements of Part VII of this permit.

4. Land Use Controls

   Where required pursuant to Conditions VIII.B.1 and VIII.C of this permit, the Permittee shall establish appropriate land use controls to achieve protection of human health and the environment. The Permittee shall comply with Conditions VIII.B.5 and VIII.B.6 of this permit when implementing corrective measures requiring land use controls. In the event an off-site property owner will not allow an environmental covenant to be imposed, the Permittee shall notify the Department within 14 calendar days of receipt of such written notification of the refusal by the off-site property owner. If the property owner does not provide a written refusal of the request to allow an environmental covenant to be imposed, the Permittee shall notify the Department within 14 days of delivery of the request to the off-site property owner. In such cases, the Department may allow the Permittee to propose an alternate area-specific land use control in accordance with ADEM Admin. Code Rule 335-5-1-.02(i), subject to the Department's review and approval.

Draft

5. Survey Plat

For corrective measures where residual concentrations of contaminants will remain in-place at levels greater than those appropriate for unrestricted land use, or for corrective measures that rely on land use controls, the Permittee must:

a. No later than the submission of the certification of closure of each hazardous waste disposal unit, the Permittee shall submit to the local zoning authority, or the authority with jurisdiction over local land use, and to the Department, a survey plat indicating the location and dimensions of the SWMUs, AOCs, and capped or partially remediated areas with respect to permanently surveyed benchmarks, the locations of sampling points, and the concentrations of hazardous constituents detected. This plat must be prepared and certified by a professional land surveyor registered in the State of Alabama. The plat must be filed with the local zoning authority or the authority with jurisdiction over local land use and must contain a note, prominently displayed, which states the Permittee's obligation to limit the property to the specified restricted uses.

b. Maintain the survey plat as described in Condition VIII.B.5.a of this permit and in the CMI Report, until the Permittee has demonstrated, to the satisfaction of the Department that the levels of hazardous constituents in all contaminated media are within limits appropriate for unrestricted land uses.

6. Environmental Covenant

No later than the submission of the survey plat required in Condition VIII.B.5, the Permittee must:

a. Record in the probate judge’s office of the county in which the property is located or a portion thereof an environmental covenant in accordance with ADEM Admin. Code R. 335-5 and ADEM Policy Memo #304 that will in perpetuity notify any potential purchaser of the property that:

i. The land is contaminated with hazardous constituents in concentrations that exceed unrestricted use standards;

ii. The use of the property is restricted by this permit for certain residential, municipal, or industrial purposes and may lead to an increased risk of exposure to hazardous constituents depending upon the activities initiated at the site. Such activities may yield an increased level of human health risk to the owner;

Draft

iii. The potential purchaser or entity that desires to work in the contaminated area should notify the Permittee before mobilizing to the area covered by the land use control.

b. Submit to the Department a certification, signed by the Permittee in accordance with Permit Condition I.C.11, that the environmental covenant specified in this part has been performed. This certification must include a copy of the covenant and of the document in which the notation has been placed.

c. Maintain the environmental covenant described in Permit Condition VIII.B.6 until the Permittee has demonstrated, to the satisfaction of the Department that the levels of hazardous constituents in all contaminated media are within limits appropriate for unrestricted land uses.

d. Submit applicable fees in accordance with ADEM Admin. Code R. 335-5-1-.06, Fee Schedule J.

7. Security

Security measures, where required by Conditions VIII.B.1 and VIII.C of this permit, will be conducted in accordance with ADEM Admin. Code R. 335-14-5-.02(5) and as prescribed in the approved CMI Plan, LUC RD or RA WP.

8. Inspection

Where corrective measures addressed in Conditions VIII.B.1 include provisions to cap in place or partially remediate properties or land areas, whether owned or not owned by the Permittee, the Permittee shall specify inspection protocols on a scheduled basis to ensure continued integrity of the remedy and to ensure that land use remains appropriately restricted per the environmental covenant established pursuant to Permit Condition VIII.B.6. Inspection provisions shall be as prescribed in the approved CMI Plan.

VIII.C. AREA SPECIFIC CONDITIONS

The Permittee shall implement the actions and conditions as described in the referenced CMI Plans identified in Table VIII.1 and this Permit; the current area specific conditions are as follows:

1. RSA-005, Inactive Waste Accumulation Area, OU-2: The Permittee shall excavate contaminated soil and replace it with clean soil. The excavated, contaminated soil will be stockpiled onto impervious material within the fenced area at RSA-005 and covered with a waterproof material to prevent contaminant migration. Composite samples will be taken from each stockpile and TCLP metals analyses will be performed. Soil meeting regulatory levels will be shipped to an off-site, permitted, Subtitle D landfill for disposal as a non-hazardous special waste. Stockpiled soil that does not meet regulatory

Draft

levels will be treated at RSA-005 with Enviroblend® Metal Waste Treatment by Premier Magnesia, LLC to chemically "fix" the metals and render the soil non-hazardous for shipment and disposal in an off-site, permitted, Subtitle D landfill. This corrective action has been designed to achieve unrestricted site use. If unrestricted site use is not achieved, additional corrective actions will be required.

2. RSA-035, In-Ground Oil/Water Separator, Building 4812: The Permittee shall excavate soil and replace it with clean soil. The corrective action has been designed to achieve unrestricted site use. If unrestricted site use is not achieved, additional corrective actions will be required.

3. RSA-049, Capped Arsenic Waste Ponds – West, OU-5: The Permittee shall conduct groundwater monitoring in addition to inspecting and maintaining the existing multi-layer RCRA-type cap that was installed in 1997 and the following engineering and administrative controls. The Permittee shall conduct groundwater monitoring in accordance with Section VII of this permit.

   a. No intrusive activities, including excavations and well installations, shall be permitted at RSA-049 that may compromise the existing cap.
   b. The site shall not be developed with residential, school, child care or playground facilities.
   c. The cap shall be maintained by mowing and performing necessary repairs in a timely manner.
   d. Cap inspections shall be performed as required in Appendix D of the operative edition of Redstone Arsenal Regulation 200-7 (Site Access Control Program), and whenever mowing is done.
   e. No buildings that are to be occupied shall be constructed at RSA-049 without vapor barrier studies or engineered controls to prevent vapor intrusion. The Permittee shall submit building plans and engineering control remedial design plans to the Department for review and approval at least 90 days prior to scheduled commencement of construction activities.
   f. No structures which have the potential to breach or negatively impact the cap shall be constructed on RSA-049.
   g. The existing chain link fence and gates shall be maintained and warning signs shall be installed, inspected and maintained at RSA-049. The warning signs shall be installed at entrance locations and other locations to be seen from any approach legible from a distance of 25 feet.
   h. The Army shall monitor and report on the presence and effectiveness of environmental use restrictions and controls annually.
   i. The LUCs shall be maintained until the concentrations of hazardous substances at RSA-049 are at levels suitable for unrestricted use and exposure, and a permit modification, in accordance with Permit Condition I.J, to remove the LUCs is submitted to the Department for review and approval.

4. RSA-053, Inactive Sanitary and Industrial Landfill, Operable Unit 07: The Permittee shall excavate soil from the southern waste disposal trench area

Draft

(WDTA) and consolidate it in the northern WDTA. A low-permeability soil cap shall be installed and maintained to prevent exposure to the waste material remaining in the northern WDTA. The Permittee shall conduct groundwater monitoring in accordance with Part VII of this permit in addition to maintaining the following institutional and engineering controls:

a. Signs shall be maintained around the soil cover identifying it as a "No Dig Area". The warning signs must meet the requirements specified in ADEM Administrative Code 335-14-5-.02(5)(c) and 335-14-6-.02(5)(c), which state that signs shall be posted at each entrance to the active portion of the facility and at other locations in sufficient numbers to be seen from any approach to the active portion and that they must be legible from 25 feet.

b. Fencing at RSA-053 shall meet the requirements specified in Alabama Administrative Code 335-14-5-.02(5).
Residential use and/or residential development of the WDTA area of the site (southern and northern), including use or development for residential housing, elementary and secondary schools, child care facilities, and playgrounds, are prohibited. An Environmental Use Restriction (EUR) shall be completed, incorporated into the facility Master Plan and recorded in the land records for the property

c. No intrusive activities, including excavations and well installations, that would compromise the effectiveness of the multilayer RCRA-type cap are permitted at the site unless prior approval is obtained from ADEM.

d. Routine maintenance requirements include, but are not limited to the following:
    i. Mowing shall be conducted a minimum of twice a year.
    ii. Quarterly inspections must be performed on the soil cap in the northern WDTA.
    iii. Repair of any disturbance or breach of the soil cap shall be conducted within 10 days of identifying the need for such repairs.
    iv. Repairs to the warning signs shall be completed on an as-needed basis and shall be conducted within 10 days of identifying the need for such repairs.

e. Annually, the Permittee shall evaluate and determine whether any changes in site use or construction have occurred which are inconsistent with the restrictions described herein. If uses inconsistent with the CMI Plan are identified, ADEM shall be notified within 10 days after such uses are identified.

f. Inspection requirements include, but are not limited to the following:
    i. Inspection of the warning signs surrounding the northern WDTA soil cap to ensure that they are present and legible shall be performed on an annual basis.
    ii. Inspection of the soil cap for the northern WDTA shall be performed on a quarterly basis to ensure that no breach of the soil cap has occurred and that underlying waste is not exposed.
    iii. An inspection/maintenance report shall be submitted to ADEM no less frequent than annually. This report may be submitted as

Draft

a separate report or as part of another report for the site. The report shall document the results of the quarterly inspections, include a discussion of any maintenance activities conducted, and identify the status of the Land Use Controls (LUCs) identified in the CMI Plan and how any deficiencies or inconsistent uses have been addressed. The annual evaluation should address whether the use restrictions and controls referenced previously were recorded in the land records and base master plan, whether the owners and state and local agencies were notified of the use restrictions and controls affecting the property, and whether use of the property has conformed to such restrictions and controls. The report should include a copy of the annual inspection report, any violations noted, and recommendations for any changes to the CMI Plan.

g. Notice shall be provided to ADEM in the annual monitoring report regarding any observed changes in use, any identified proposed changes in use, applications for building permits, or proposals for any site work inconsistent with the EUR. RSA shall notify ADEM at least 90 days in advance of the proposed closing on any sale or other conveyance of any interest in any or all of the Property, in accordance with ADEM Memorandum #304.

h. The LUCs shall be maintained until the concentrations of hazardous substances at RSA-053 are at levels suitable for unrestricted use and exposure, and a permit modification, in accordance with Permit Condition I.J., to remove the LUCs is approved by the Department.

5. RSA-054/RSA-055, Inactive Sanitary and Industrial Landfill, OU-1: The Permittee shall excavate soil and waste from the southern portion of the landfill (RSA-055), from under Fowler Road and from adjacent to Lindner Road near its intersection with Jungerman Road. The wastes shall be moved to and consolidated in the northern portion of the landfill (RSA-054). A low-permeability soil cover shall be installed over the consolidated wastes and maintained to prevent exposure to the waste. The Permittee shall conduct groundwater monitoring in accordance with Part VII of this permit in addition to installing and maintaining the following institutional and engineering controls:

a. Signs shall be installed and maintained around the soil cap identifying it as a “No Dig Area”. The warning signs shall be placed a maximum of 200 feet apart along Fowler and Lindner Roads and a maximum of 400 feet apart along the northern and western soil cover boundaries. The signs must be legible from 25 feet.

b. No structures are to be built over the northern portion of RSA-054/055 where the clay cover will be placed.

c. The entire site is unsuitable for residential use or residential development. No residential housing, elementary or secondary schools, child care facilities or playgrounds are to be constructed. Industrial structures may be constructed in the southern portion of RSA-054/055 (south of Fowler Road) provided that further evaluation indicates that there would be no unacceptable health risk associated with vapor

Draft

intrusion or indoor air exposure. The Permittee shall obtain ADEM approval prior to any planned construction at RSA-054/055.

d. An Environmental Use Restriction (EUR) shall be completed, incorporated into the facility Master Plan and recorded in the land records for the property

e. No intrusive activities, including excavations and well installations, that would compromise the effectiveness of soil cap, are permitted at RSA-054/055 unless prior approval is obtained from ADEM.

f. Routine maintenance and inspection requirements include, but are not limited to the following:

   i. Mowing shall be conducted at least twice a year. Inspect the soil cap in the northern portion of RSA-054/055 at least once a quarter to ensure that no breach of the cap has occurred. Inspect the storm water conveyance system in the northern portion of RSA-054/055 at least quarterly to ensure that the system is uncompromised and in good working order.

   ii. Repair any disturbance or breach of the soil cap or storm water conveyance system within 10 days of identifying the need for such repairs.

   iii. Inspect the warning signs around the capped landfill area to ensure that they are present and legible at least annually.

   iv. Repair the warning signs on an as-needed basis and within 10 days of identifying the need for such repairs.

   v. At least annually, evaluate RSA-054/055 to determine whether any changes in site use or construction have occurred that are inconsistent with the restrictions described herein. If inconsistent uses are identified, ADEM shall be notified within 10 days.

   vi. An inspection/maintenance report shall be submitted to ADEM at least annually. This report may be submitted as a stand-alone report or as part of another report for RSA-054/055. The report shall document the results of the quarterly cap and storm water conveyance system inspections, include a discussion of the maintenance activities conducted, and identify the status of the Land Use Controls (LUCs) identified in the CMI Plan and how any deficiencies or inconsistent uses have been addressed. The annual report should address whether the use restrictions and controls were recorded in the land records and base master plan, whether the owners and state and local agencies were notified of the use restrictions and controls affecting the property, and whether use of the property has conformed to such restrictions and controls. The report should include any violations noted and the procedures followed to address the violations.

g. The annual monitoring report shall provide ADEM information regarding any observed changes in use, any identified proposed changes in use, applications for building permits, or proposals for any site work that is inconsistent with the EUR. RSA shall notify ADEM at least 90 days in advance of the proposed closing on any sale or other

Draft

conveyance of any interest in any or all of the Property, in accordance with ADEM Memorandum #304.

h. The LUCs shall be maintained until the concentrations of hazardous substances at RSA-054/055 are at levels suitable for unrestricted use and exposure, and a permit modification, in accordance with Permit Condition I.J., to remove the LUCs is approved by the Department.

6. RSA-057, Inactive Arsenic Waste Lagoons – East, OU-6: The Permittee shall inspect and maintain LUCs required as follows.

a. No residential use or development shall be permitted at RSA-057.
b. Maintain warning signs at key site entry points. The warning signs shall be installed at entrance and other locations to be seen from any approach legible from a distance of 25 feet.
c. Prevent exposure of construction worker to soils with arsenic concentrations of greater than 100 mg/kg.
d. No soils shall be excavated at the site without a use permit.
e. Special handling procedures shall be required for future site excavations for industrial development as outlined in all applicable documents (e.g., Soils Management Plan, Investigation-Derived Waste Management Plan, etc.)
f. The Permittee shall monitor and report on the presence and effectiveness of land use restrictions and controls annually.
g. The LUCs shall be maintained until the concentrations of hazardous substances at RSA-057 are at levels to allow for unrestricted use and exposure, and a permit modification, in accordance with Permit Condition I.J, to remove the LUCs is approved by the Department.

7. RSA-058, Inactive Rubble Fill/Waste Pile: The Permittee shall excavate soil, dispose off-site, and replace with clean soil. The corrective action has been designed to achieve industrial site use for surface media. The Permittee shall conduct fish tissue, surface water, and sediment monitoring annually in accordance with the CMI plan and inspect and maintain LUCs required as follows.

a. No residential use or development, including development for residential housing, elementary and secondary schools, child care facilities, and playgrounds shall be permitted at RSA-058.
b. Recreational fishing within the Central Swamp is prohibited.
c. Maintain warning signs for restrictions on fishing at locations to be seen from any approach legible from a distance of 25 feet.
d. Implement the long-term monitoring plan for fish tissue, surface water, and sediment at the site. Maintain biological fish tissue sampling locations 058-Fish01 and 058-Fish02, and surface water/sediment sampling locations 058-SWSD001, 058-SWSD002, 058-SWSD003 for RSA-058 as identified in the CMI Plan.
e. An EUR shall be completed, incorporated into the facility Master Plan and recorded in the land records for the property
f. An annual monitoring report on the presence and effectiveness of land use restrictions and controls shall be submitted to ADEM for the site.

Draft

This report shall document the annual inspection and identify the status of the EUR and how any deficiencies or inconsistent uses have been addressed. The annual evaluation shall address whether the use restrictions and controls referenced previously are communicated in the deed(s), whether the owners and state and local agencies are notified of the use restrictions and controls affecting the property, and whether use of the property has conformed with such restrictions and controls. RSA shall notify ADEM at least 90 days in advance of the proposed closing on any sale or other conveyance of any interest in any or all of the Property, in accordance with ADEM Memorandum #304.

g. The LUCs shall be maintained until the concentrations of hazardous substances at RSA-058 are suitable for unrestricted use and exposure, and a permit modification, in accordance with Permit Condition I.J., to remove the LUCs is approved by the Department.

8. RSA-060, Inactive Sanitary and Industrial Landfill, Operable Unit 7: The Permittee shall excavate soil from the southern portion of the site and consolidate it in the northern portion of the site. A low-permeability soil cap shall be installed and maintained to prevent exposure to the waste material remaining in the northern area of the site. The Permittee shall conduct groundwater monitoring in accordance with Part VII of this permit in addition to maintaining the following institutional and engineering controls:

a. Signs shall be maintained around the soil cover identifying it as a “No Dig Area”. The warning signs must meet the requirements specified in ADEM Administrative Code 335-14-5-.02(5)(c) and 335-14-6-.02(5)(c), which state that signs shall be posted at each entrance to the active portion of the facility and at other locations in sufficient numbers to be seen from any approach to the active portion and that they must be legible from 25 feet.

b. Fencing at RSA-060 shall consist of high visibility, plastic coated, single strand wire that will be maintained at a three-foot height above the ground surface with steel posts. The fence shall be installed as described in Appendix J of the CMI work plan and shall meet the requirements specified in Alabama Administrative Code 335-14-5-.02(5).

c. Residential use and/or residential development of the waste disposal area of the site (southern and northern), including use or development for residential housing, elementary and secondary schools, child care facilities, and playgrounds, are prohibited.

d. An Environmental Use Restriction (EUR) shall be completed, incorporated into the facility Master Plan and recorded in the land records for the property.

e. No intrusive activities, including excavations and well installations, that would compromise the effectiveness of the multilayer RCRA-type cap are permitted at the site unless prior approval is obtained from ADEM.

f. Routine maintenance requirements include, but are not limited to the following:

i. Mowing shall be conducted a minimum of twice a year.

Draft

ii. Quarterly inspections must be performed on the soil cap in the northern disposal area. Repair of any disturbance or breach of the soil cap shall be conducted within 10 days of identifying the need for such repairs.

iii. Repairs to the warning signs shall be completed on an as-needed basis and shall be conducted within 10 days of identifying the need for such repairs.

iv. Repairs to the perimeter fencing shall be completed on an as-needed basis and shall be conducted within 10 days of identifying the need for such repairs.

g. Annually, the Permittee shall evaluate and determine whether any changes in site use or construction have occurred which are inconsistent with the restrictions described herein. If uses inconsistent with the CMI Plan are identified, ADEM shall be notified within 10 days after such uses are identified.

h. Inspection requirements include, but are not limited to the following:

i. Inspection of the warning signs surrounding the northern disposal area soil cap to ensure that they are present and legible shall be performed on an annual basis.

ii. Inspection of the perimeter fence to ensure the fence is positioned at the proper height, not covered by vegetation, the components (wire, posts, fasteners, gates, locking mechanisms) meet the engineering specifications shall be performed on an annual basis.

iii. Inspection of the soil cap for the northern disposal area shall be performed on a quarterly basis to ensure that no breach of the soil cap has occurred and that underlying waste is not exposed.

iv. An inspection/maintenance report shall be submitted to ADEM no less frequent than annually. This report may be submitted as a separate report or as part of another report for the site. The report shall document the results of the quarterly inspections, include a discussion of any maintenance activities conducted, and identify the status of the Land Use Controls (LUCs) identified in the CMI Plan and how any deficiencies or inconsistent uses have been addressed. The annual evaluation should address whether the use restrictions and controls referenced previously were recorded in the land records and base master plan, whether the owners and state and local agencies were notified of the use restrictions and controls affecting the property, and whether use of the property has conformed to such restrictions and controls. The report should include a copy of the annual inspection report, any violations noted, and recommendations for any changes to the CMI Plan.

i. Notice shall be provided to ADEM in the annual monitoring report regarding any observed changes in use, any identified proposed changes in use, applications for building permits, or proposals for any site work inconsistent with the EUR. RSA shall notify ADEM at least 90 days in advance of the proposed closing on any sale or other conveyance of any interest in any or all of the Property, in accordance with ADEM Admin. Code r. 335-5-1-.02(3).

Draft

j. The LUCs shall be maintained until the concentrations of hazardous substances at RSA-060 are at levels suitable for unrestricted use and exposure, and a permit modification, in accordance with Permit Condition I.J., to remove the LUCs is approved by the Department.

9. RSA-095, Chlorinated Solvent Distillation Unit 2, Building 7368, OU-9: The Permittee shall excavate perchlorate-contaminated vadose zone soil and dispose it off-site, implement soil, groundwater, condensate and vapor monitoring, electrical resistive heating (ERH) of soil and groundwater, groundwater filtration, liquid-phase carbon adsorption of groundwater and vapors, thermal oxidation of vapors and sewer discharge of the filtered groundwater. The corrective action has been designed to achieve unrestricted site use for surface media. If unrestricted site use for surface media is not achieved, additional corrective actions will be required.

10. RSA-101 shall be addressed in accordance with the Olin Consent Decree and the *Joint Technical Proposal to Implement Remedial Activities Pursuant to Consent Decree* (Reference Civil Action No. CV80-PT-5300-NE Filed May 31, 1983).

11. RSA-142, TCE Spill by Thiokol Degreasing Process, OU-9: The Permittee shall excavate perchlorate-contaminated vadose zone soil and dispose it off-site, implement soil, groundwater, condensate and vapor monitoring, ERH of soil and groundwater, groundwater filtration, liquid-phase carbon adsorption of groundwater and vapors, thermal oxidation of vapors and sewer discharge of the filtered groundwater. The corrective action has been designed to achieve unrestricted site use for surface media. If unrestricted site use for surface media is not achieved, additional corrective actions will be required.

12. RSA-194, Physical Testing Laboratory and Storage Facilities, OU-10: The Permittee shall excavate contaminated soil and replace it with clean soil. The excavated, contaminated soil will either be loaded directly for transport to a Subtitle D landfill or stockpiled onto impervious material within RSA-194 and covered with waterproof material to prevent contaminant migration. Composite samples of the stockpile will be taken at a frequency of one sample per 200 cubic yards of material for analysis of perchlorate. If perchlorate concentrations are below the cleanup goal, the soil will be used as backfill during site restoration. Soil with perchlorate concentrations exceeding the cleanup goal will be shipped to a permitted Subtitle D landfill for disposal as a non-hazardous special waste. Prior to transport and disposal of excavated waste, appropriate approval from ADEM and the selected waste disposal facility is required. This corrective action has been designed to achieve unrestricted site use. If unrestricted site use is not achieved, additional corrective actions will be required.

13. RSA-198, Equipment /Tool Cleaning Facility, Building 7359/RSA-085, Inactive Temporary Waste Storage Pad 1, Building 7359, OU-09: The Permittee shall excavate contaminated soil and replace it with clean soil. The excavated, contaminated soil will either be loaded directly for transport to a

Draft

Subtitle D landfill or stockpiled onto impervious material within RSA-198 and covered with waterproof material to prevent contaminant migration. Composite samples of the stockpile will be taken at a frequency of one sample per 200 cubic yards of material for analysis of perchlorate. If perchlorate concentrations are below the cleanup goal, the soil will be used as backfill during site restoration. Soil with perchlorate concentrations exceeding the cleanup goal will be shipped to a permitted Subtitle D landfill for disposal as a non-hazardous special waste. Prior to transport and disposal of excavated waste, appropriate approval from ADEM and the selected waste disposal facility is required. This corrective action has been designed to achieve unrestricted site use. If unrestricted site use is not achieved, additional corrective actions will be required.

14. RSA-199, Propellant Mixing Facility #2, Building 7382, OU-10: The Permittee shall excavate contaminated soil and replace it with clean soil. The excavated, contaminated soil will either be loaded directly for transport to a Subtitle D landfill or be stockpiled onto impervious material within RSA-199 and covered with waterproof material to prevent contaminant migration. Composite samples of the stockpile will be taken at a frequency of one sample per 200 cubic yards of material for analysis of perchlorate. If perchlorate concentrations are below the cleanup goal, the soil will be used as backfill during site restoration. Soil with perchlorate concentrations exceeding the cleanup goal will be shipped to a permitted Subtitle D landfill for disposal as a non-hazardous special waste. Prior to transport and disposal of excavated waste, appropriate approval from ADEM and the selected waste disposal facility is required. This corrective action has been designed to achieve unrestricted site use. If unrestricted site use is not achieved, additional corrective actions will be required.

15. RSA-204, Oxidizer Facility, Building 7691, OU-10: This corrective action has been designed to achieve unrestricted site use. If unrestricted site use is not achieved, additional corrective actions will be required.
    a. As described in the Revision 2 CMI Work Plan for RSA-204, the Permittee shall excavate contaminated soil, dispose it off-site, and replace it with clean soil. The excavated, contaminated soil will be stockpiled onto impervious material within or nearby RSA-204 and covered with waterproof material to prevent contaminant migration. Composite samples of the stockpile will be taken at a frequency of one sample per 200 cubic yards of material for perchlorate analysis. If perchlorate concentrations are below the cleanup goal, the soil will be used as backfill during site restoration. Soil with perchlorate concentrations exceeding the cleanup goal will be shipped to a permitted Subtitle D landfill for disposal as a non-hazardous special waste. Prior to transport and disposal of excavated waste, appropriate approval from ADEM and the selected waste disposal facility is required.
    b. The Permittee shall implement in situ enhanced bioremediation (ISEB) for groundwater, introducing emulsified vegetable oil (EVO) via well points and direct push-technology injection points. The groundwater

Draft

shall be monitored for attenuation (groundwater sampling and reporting) in accordance with the CMI Plan and Part VII of this permit.

c. If not all of the perchlorate contaminated soil can be removed adjacent to the foundations of Building 7689, an impermeable, multi-layer cap, as described in the CMI WP, shall be installed and maintained to prevent exposure to any contaminated soil. In case a cap is required, the Permittee shall maintain the following institutional and engineering controls:

i. Excavation or other activities that would disturb the cap adjacent to Building 7689 are prohibited, unless prior approval by ADEM and conducted with appropriate health and safety precautions. If such activities are conducted, the cover must be restored upon completion of the work.

ii. The area of the cap shall be identified with signage prohibiting digging without approval of the Chief of the Installation Restoration Branch of the Environmental Management Division at the United States Army Garrison, Redstone Arsenal.

iii. Soil currently covered by Building 7689 must remain covered with the building unless soil confirmation sampling demonstrates that perchlorate concentrations are below the 1.7 milligrams per kilogram cleanup goal.

iv. An EUR, in accordance with ADEM Admin. Code r. 335-5-1-.02(3), shall be completed, incorporated into the facility Master Plan and recorded in the land records for the property.

v. The Army shall monitor and report on the presence and effectiveness of land use restrictions and controls annually.

vi. Routine maintenance requirements include, but are not limited to the following:

I. Site inspections shall consist of complete walkthroughs and visual inspections of the capped area.

II. Although the capped area will be paved with concrete, mowing shall be conducted in areas adjacent to the cap at least twice a year.

III. Repair of any disturbance or breach of the cap shall be conducted within 10 days of identifying the need for such repairs.

IV. Repairs to the signage prohibiting digging shall be completed on an as-needed basis and shall be conducted within 10 days of identifying the need for such repairs.

vii. Inspection requirements include, but are not limited to the following:

I. Inspection of the signs prohibiting digging near the cap shall be performed semiannually to ensure that they are present and legible.

II. Inspection of the capped area shall be performed semiannually to ensure that no breach of the cap has occurred and that underlying waste is not exposed.

Draft

III. An inspection/maintenance report shall be submitted to ADEM at least annually. This report may be submitted as a separate report or as part of another report for the site. The report shall document the results of the semiannual inspections, include a discussion of any maintenance activities conducted, and identify the status of the LUCs and how any deficiencies or inconsistent uses have been addressed. The annual report should address whether the use restrictions and controls have been recorded in the land records and base master plan, whether the owners and state and local agencies were notified of the use restrictions and controls affecting the property, and whether use of the property has conformed to such restrictions and controls.

IV. Prior to modifying the inspection frequency, the Army shall submit a permit modification request to ADEM for review and approval.

viii. Notice shall be provided to ADEM in the annual monitoring report regarding any observed changes in use, any identified proposed changes in use, applications for building permits, or proposals for any site work inconsistent with the EUR. RSA shall notify ADEM at least 90 days in advance of the proposed closing on any sale or other conveyance of any interest in any or all of the Property, in accordance with ADEM Admin. Code Rule 335-5-1-.02(3).

ix. The LUCs shall be maintained until the concentrations of hazardous substances at RSA-204 are at levels suitable for unrestricted use and exposure, and a permit modification, in accordance with Permit Condition I.J., to remove the LUCs is approved by the Department.

16. RSA-227, Inactive Washrack Adjacent to Building 5492, OU 06. As described in the CMI Work Plan for RSA-227, the Permittee shall excavate contaminated soil and replace it with clean soil. The excavated, contaminated soil will either be loaded directly for transport to a Subtitle D landfill or be stockpiled onto impervious material within RSA-227, surrounded by a one-foot high berm and covered with a waterproof material to prevent contaminant migration. Composite samples will be taken from each stockpile and PAH and arsenic analyses will be performed. Soil meeting regulatory levels will be shipped to an off-site, permitted, Subtitle D landfill for disposal as a non-hazardous special waste. Prior to transport and disposal of excavated waste, appropriate approval from ADEM and the selected waste disposal facility is required. This corrective action has been designed to achieve unrestricted site use. If unrestricted site use is not achieved, additional corrective actions will be required.

17. RSA-250, Former Storage Warehouse, Building 778/5678, OU 03: The Permittee shall excavate contaminated soil and replace it with clean soil. The excavated, contaminated soil will either be loaded directly for transport to a

Draft

Subtitle D landfill or be stockpiled onto impervious material within RSA-250, surrounded by a one-foot high berm and covered with a waterproof material to prevent contaminant migration. Composite samples will be taken from each stockpile and TCLP metals analyses will be performed. Soil meeting regulatory levels will be shipped to an off-site, permitted, Subtitle D landfill for disposal as a non-hazardous special waste. Prior to transport and disposal of excavated waste, appropriate approval from ADEM and the selected waste disposal facility is required. This corrective action has been designed to achieve unrestricted site use. If unrestricted site use is not achieved, additional corrective actions will be required.

18. MSFC-027, Inactive Waste Accumulation Area, OU-18: As described in the CNI Work Plan for MSFC-027, the Permittee shall excavate soil that has been contaminated with arsenic, pesticides, and PCBs, and replace it with clean soil. Soil meeting regulatory levels will be shipped to an off-site, permitted, Subtitle D landfill for disposal as a non-hazardous special waste. The corrective action has been designed to achieve unrestricted site use. If unrestricted site use is not achieved, additional corrective actions will be required. Any actions associated with groundwater beneath MSFC-027 will be addressed by the groundwater unit investigation (i.e., OU-3) being conducted by the National Aeronautics and Space Administration George C. Marshall Space Flight Center.

19. Groundwater at the following SWMUs shall be addressed as part of separate SWMUs. The Permittee shall conduct groundwater monitoring in accordance with Section VII of this permit.

    a. RSA-011, Former Sewage Treatment Plant No. 1, OU-10: No further action required for surface media (i.e., surface soil, subsurface soil and soil vapor). The groundwater shall be investigated and/or remediated as part of RSA-146.

    b. RSA-087, Inactive Temporary Waste Storage Pads 1 & 2, Building 7368: No further action required for surface media. The groundwater shall be investigated and/or remediated as part of RSA-146.

    c. RSA-088, Inactive Temporary Waste Storage Pad, Building 7625: No further action required for surface media. The groundwater shall be investigated and/or remediated as part of RSA-146.

    d. RSA-094, Chlorinated Solvent Distillation Unit 1, OU-10: No further action required at this time for surface media (i.e., surface soil, subsurface soil and soil vapor). The groundwater shall be investigated and/or remediated as part of RSA-146.

    e. RSA-096, Chlorinated Solvent Distillation Unit 3, Building 7740: No further action required at this time for surface media (i.e., surface soil, subsurface soil and soil vapor). The groundwater shall be investigated and/or remediated as part of RSA-146.

Draft

f. RSA-196/RSA-098, Test Stand and Cleaning Building, OU-10: No further action required at this time for surface media (i.e., surface soil, subsurface soil and soil vapor. The groundwater shall be investigated and/or remediated as part of RSA-146.

g. RSA-200, ROP Line 5 Area Operations Facilities: No further action required for surface media. The groundwater shall be investigated and/or remediated as part of RSA-146.

h. MSFC-2/87, Inactive Abandoned Drum Disposal Site/Inactive Cyanide Lagoon, OU-18: No further action required for surface media (i.e., surface soil, subsurface soil, surface water, sediment, spring water, and soil vapor). The groundwater shall be investigated and/or remediated as part of RSA-149.

20. Groundwater, Installation-Wide; As indicated in the IROD dated September 2007, LUCs are required as follows:
    a. No drinking water wells shall be installed on the Arsenal. Groundwater, including springs and seeps shall not be used for drinking water, or irrigation.
    b. Groundwater shall only be used for non-potable purposes, preventing human consumption and controlling other exposures.
    c. The Permittee shall pursue formal coordination with the adjacent local government agencies (e.g., Madison County, Morgan County, and the City of Huntsville) regarding any pending groundwater actions (e.g., installation of groundwater wells where potentially contaminated groundwater may be encountered, etc,) off the Arsenal. The Permittee shall report the status of the coordination with the local governmental agencies in the annual corrective action effectiveness report.
    d. The Permittee shall control the vapors from the groundwater by mitigating the plume off the Arsenal.The Permittee shall monitor and report on the environmental use restrictions and controls annually.
    e. To determine the effectiveness of the Installation Wide Groundwater IROD, and in accordance with Permit Condition VII.B.1.c, the Permittee shall submit a Site Wide Groundwater Monitoring Plan to the Department for review and approval. The Site Wide Groundwater Monitoring Plan shall be submitted to the Department within 180 days from the effective date of this permit.

VIII.D. CORRECTIVE MEASURES IMPLEMENTATION (CMI) AND ANNUAL MONITORING REPORTS

1. CMI Progress and Annual Reports

If the time required to complete implementation of a specific set of corrective measures, as described in the Department-approved CMI Plan, is greater than 180 calendar days, the Permittee shall provide ADEM with progress reports according to the schedule approved by ADEM in the CMI Plan. If no schedule

Draft

has been approved as part of the associated plan, progress reports shall be submitted at least quarterly. The progress reports shall, at a minimum, contain the following information:

a. A description of the portion of CMI Plan, completed;

b. Summaries of and deviations from the approved CMI Plan, during the reporting period;

c. Summaries of current and potential problems, including recommended solutions and alternatives as well as corrective actions undertaken;

d. Any monitoring data (soil, air, dust, water) collected for any reason during the construction period for the purposes of monitoring potential for human and ecological exposure; and,

e. Projected work for the next period and impacts to the approved schedule.

2. Final CMI Reports

Upon completion of construction of corrective measures systems, implementation of land use controls, interim removal actions, or other short-term activities required by this permit, or the approved CMI Plan, the Permittee shall submit to the Department a Final Report containing, at a minimum, the following:

a. A description of activities completed;

b. For cap and cover remedies, as-built construction drawings presenting the final in-place three-dimensional location of contaminated material. A plan view of the remediated areas shall be presented in addition to a cross section of the in-place capped areas;

c. Hazardous waste manifests indicating the handling of any excavated material that has been shipped off-site to a Department-approved, certified landfill;

d. For remedies involving land use controls, a copy of the survey plat and environmental covenant required by Condition VIII.B of this permit;

e. Monitoring data (soil, air, dust, water) collected for any reason during the construction period for the purposes of monitoring potential for human and ecological exposure; and

f. Certification, prepared in accordance with ADEM Admin. Code Rule 335-14-8-02 (2)(d) by the Permittee and a registered Professional Engineer (State of Alabama), that the corrective measures implementation phase (*i.e.*, construction) required by this permit is

Draft

complete and that the approved system and/or facilities are ready for operation in accordance with the intended design (*i.e.*, CMI Plan).

3. Corrective Measures (CM) Effectiveness Reports

a. For corrective measures that have been fully implemented and where the corrective measures system(s) must operate for a period of time to achieve cleanup goals or levels, the Permittee shall submit an overall CM Effectiveness Report (addressing all Corrective Measures systems at the facility which are subject to this permit condition) annually, unless otherwise approved by the Department, beginning 180 calendar days following the Department's approval of the Final CMI Report for the initial Corrective Measures system subject to this permit condition. The overall CM Effectiveness Report shall include, at a minimum, the following information for each SWMU and/or AOC included in the report:

i. A detailed narrative presenting an evaluation of the effectiveness of the selected remedy;

ii. Summaries of compliance with and progress toward achieving cleanup goals;

iii. Any significant revisions, adjustments, or proposed modifications to the selected remedy;

iv. Tabulated environmental sampling and monitoring data including, but not limited to, groundwater quality, elevation data, and a graphical representation of all constituents detected during each sampling event from recovery wells, monitoring wells, drinking water wells, and other locations;

v. Chain of custody, field reports, and laboratory data sheets to include the date of collection, the date the sample was extracted, and the date of sample analysis for samples collected during the reporting period;

vi. Any monitoring data (soil, air, dust, water) collected for any reason during the post-construction period for the purposes of monitoring potential for human and ecological exposure;

vii. Isoconcentration maps depicting the distribution of parameters for each sampling event;

viii. Time versus concentration plots for each monitoring parameter for each recovery well and a representative number of effectiveness wells;

Draft

ix. Tabulated volumetric data on groundwater pumped and pumping rates (monthly and cumulative) for each recovery well;

x. Records of any groundwater recovery system operation time, including shutdown periods, not including any minor (less than 24 hours) shutdowns for repairs, maintenance, etc.;

xi. Potentiometric surface maps;

xii. Description of land use during the reporting period at the designated area requiring corrective measures; and,

xiii. Findings of the Permittee's investigation into the continued effectiveness of land use controls per Condition VIII.B.

b. If, at any time, the Permittee determines that any remedy selection specified in Condition VIII.B or VIII.C of this permit no longer satisfies the applicable requirements of ADEM Admin. Code R. 335-14-5-.06(12) or this permit for releases of hazardous waste or hazardous constituents originating from SWMUs or AOCs, the Permittee must, within 90 calendar days, submit an application for a permit modification, pursuant to Permit Condition I.J, to make any appropriate changes to the CMI Plan.

c. The application for changes in the CMI Plan, including changes in inspection and monitoring provisions of the CMI Plan, shall be submitted as an application for a permit modification pursuant to the requirements of ADEM Admin. Code R. 335-14-8-.04.

4. Final Report of Corrective Measures

Within 90 calendar days following attainment of cleanup levels or goals as outlined in this Permit and the approved CMI Plans, the Permittee shall submit to the Department a Final Report of Corrective Measures (FRCM). The FRCM shall contain a certification by the Permittee and a registered Professional Engineer (State of Alabama), that all remedial measures required by this permit and the approved CMI Plan has been completed. The FRCM shall outline any procedures and schedules for dismantling of corrective measures systems, groundwater monitoring or recovery systems, removal of land use controls, and any other remedial systems or controls required by this permit or the approved CMI Plan.

Draft

Table VIII.1

The following Solid Waste Management Unit(s) (SWMU) and/or Area(s) of Concern (AOC) numbers and descriptions correspond with those noted in the RCRA Facility Assessment (RFA) Report. Where discrepancies exist, the permit will take precedence.

List of SWMUs and AOCs requiring Corrective Measures:

Although some sites are listed within this table as having corrective measures for specific media, additional corrective measures may be required for other media. For example, RSA-087 is included on this table as having corrective measures for surface media and is also included on Table VI.6 as requiring a CMI plan for the groundwater underlying the site.

Applicable SWMU/AOC	*CMS/CMI/ROD/LUC RD	Approval Date
RSA-005	Revision 1, CMI Work Plan for Surface Media, dated August 25, 2015	05/05/2016
RSA-011, Former Sewage Treatment Plant No. 1, OU-10	ROD for Surface Media at RSA-011, dated August 2007	09/05/2007
RSA-049, Capped Arsenic Waste Ponds – West, OU-5	Final LUC RD for Surface Media at RSA-049, dated June 1, 2009	07/02/2009
RSA-053, Inactive Sanitary and Industrial Landfill, OU-7	CMI for Surface Media and Groundwater at RSA-053, dated September 10, 2012	04/16/2013
RSA-054/RSA-055, Inactive Sanitary and Industrial Landfill, OU-1	Revision 2, CMI Work Plan for Surface Media and Groundwater, dated December 10, 2012	04/16/2013
RSA-057, Inactive Arsenic Waste Lagoons, East, OU-6	Final ROD for Surface Media at RSA-057, dated August 2007	09/10/2007
	Final Remedial Action Work Plan for RSA-057, dated March 4, 2008	03/31/2008
	Revision 4, Remedial Action Phase 1 Completion Report for RSA-057, dated August 7, 2012	09/19/2012
RSA-058, Inactive Rubble Fill/Waste Pile	Revision 2 CMI Work Plan, RSA-058, dated November 14, 2014	05/15/2015
RSA-060, Inactive Sanitary and Industrial Landfill, OU-7	Revision 2 CMI Work Plan, RSA-060, dated July 25, 2016	9/29/2016
RSA-087, Inactive Temporary Waste Storage Pad 1 & 2, Bldg 7368	Revision 2 CMI Work Plan for Surface Media, RSA-087 and RSA-088, dated August 5, 2013	11/26/2013
RSA-088, Inactive Temporary Waste Storage Pad, Bldg 7625	Revision 2 CMI Work Plan for Surface Media, RSA-087 and RSA-088, (August 5, 2013)	11/26/2013
RSA-094, Chlorinated Solvent Distillation Unit 1, OU-10	ROD for Surface Media at RSA-094, dated August 2009	09/03/2009

Draft

Table VIII.1 (con't)

Applicable SWMU/AOC	*CMS/CMI/ROD/LUC RD	Approval Date
RSA-095, Chlorinated Solvent Distillation Unit 2, Bldg 7368, OU-9	Revision 1 CMI WP for Surface Media, RSA-095 and RSA-142, dated September 6, 2013, Revised May 18, 2016	06/03/2016
RSA-096, Chlorinated Solvent Distillation Unit 3, Building 7740	CMI WP for Surface Media at RSA-096, dated June 7, 2012 (Reissued on December 7, 2012)	04/16/2013
RSA-101, DDT Contaminated Area DD	Consent Decree and *Joint Technical Proposal to Implement Remedial Activities Pursuant to Consent Decree* (Reference Civil Action No. CV80-PT-5300-NE)	Filed 05/31/1983
RSA-142, TCE Spill by Thiokol Degreasing Process, OU-9	Revision 1 CMI WP for Surface Media, RSA-095 and RSA-142, dated September 6, 2013, Revised May 18, 2016	06/03/2016
RSA-194, Physical Testing Laboratory and Storage Facilities, OU-10	Revision 1 CMI WP for Surface Media, RSA-194, RSA-198 and RSA-199, dated May 18, 2016	9/29/2016
RSA-196/098, Test Stand and Cleaning Building/Chlorinated Solvent Unit Bldg 7346, OU-10	ROD for Surface Media at RSA-196/098, dated August 2009	09/11/2009
RSA-198/085, Equipment /Tool Cleaning Facility, Building 7359/RSA-085, Inactive Temporary Waste Storage Pad 1, Building 7359, OU-09	Revision 1 CMI WP for Surface Media, RSA-194, RSA-198 and RSA-199, dated May 18, 2016	9/29/2016
RSA-199, Propellant Mixing Facility #2, Building 7382, OU-10	Revision 1 CMI WP for Surface Media, RSA-194, RSA-198 and RSA-199, dated May 18, 2016	9/29/2016
RSA-200, ROP Line 5 Area Operations Facilities	Revision 2 CMI Work Plan for Surface Media, RSA-200, dated August 5, 2013	11/26/2013
RSA-204, Oxidizer Facility, Bldg 7691	Revision 2 CMI Work Plan for Surface Media and Groundwater at RSA-204, dated September 23, 2016	TBD
RSA-227, Inactive Washrack Adjacent to Building 5492, OU 06	Revision 1 CMI WP for Surface Media at RSA-227, dated March 24, 2016	TBD
RSA-250, Former Storage Warehouse, Building 778/5678, OU-3	Revision 1 CMI Work Plan for Surface Media at RSA-250, dated July 20, 2016	9/29/2016

Draft

Table VIII.1 (con't)

Applicable SWMU/AOC	*CMS/CMI/ROD/LUC RD	Approval Date
Installation-Wide Groundwater Interim Record of Decision (IROD)	Interim ROD, Interim Remedial Action for Installation-Wide Groundwater, dated September 2007	09/21/2007
	Installation-Wide Groundwater LUC RD, dated June 1, 2009	08/18/2009
MSFC-002/087, Inactive Abandoned Drum Disposal Site/Inactive Cyanide Lagoon, OU-18	ROD for Surface Media at MSFC-002/087, dated May 2008	06/20/2008
MSFC-027, Inactive Waste Accumulation Area, OU-18	CMI Work Plan for MSFC-027, dated April 26, 2016	TBD

*Note: RODs, LUC RD and/or RA WP documents serve as the CMI Plan for some SWMUs/AOCs pursuant to this Permit and are subject to the same Permit requirements.

Draft

SECTION M: REDSTONE ARSENAL EXPLOSIVE DESTRUCTION SYSTEM

REDSTONE ARSENAL
REDSTONE ARSENAL EXPLOSIVE DESTRUCTION SYSTEM (RSA-EDS)
MAJOR PERMIT MODIFICATION APPLICATION
PERMIT NUMBER AL7 210 020 742

1.0 Introduction

The purpose of this document is to inform the Alabama Department of Environmental Management (ADEM) that Redstone Arsenal (RSA) desires to modify the Alabama Hazardous Wastes Management and Minimization Act (AHWMMA) Hazardous Waste Permit, Permit Number AL7 210 020 742. In accordance with ADEM Administrative Code (AAC), Regulation 335-14-8-.04, RSA submits the proposed modification application described below as a Major modification.

2.0 Description of Proposed Modification and Rationale

In September 2010, ADEM issued an AHWMMA Hazardous Waste Permit to RSA. The permit governs the storage, treatment, and disposal of hazardous waste, as well as corrective measures for multiple solid waste management units (SWMUs) and areas of concern (AOCs). Table VI.5 of the AHWMMA permit identified 17 sites that require interim measures (IMs) and/or source removal actions to be completed.

In March 2011, RSA submitted the Interim Measures Work Plan for Seventeen Suspect Chemical Warfare Materiel Sites to ADEM for approval. The Interim Measures Work Plan (IMWP) lays out the process for when site-specific work plans will be developed and submitted to ADEM for approval. These site-specific IMWPs will identify the activities necessary to complete the required IM and/or source removal actions. Implementation of site-specific IMWPs is anticipated to generate large quantities of recovered munitions and other items that contain chemical agent or industrial chemical fills, based on results from a recent historical research and analysis project conducted by the U.S. Army.

Currently, RSA does not have the capacity or capability to treat the anticipated quantity of recovered items that may result from IM activities. This modification request, therefore, proposes the addition of up to two Explosive Destruction System (EDS) Phase 2 units to provide the necessary treatment capability to complete the initial stage of IM.

The RSA-EDS site will be located within the 8200 series block of the RSA storage igloos area.

The EDS units are classified as containers and will be used to treat/destroy hazardous waste recovered munitions or other items that resulted from installation IM activities.

There will be no permitted hazardous waste tanks, incineration, land disposal, waste piles, containment building, or miscellaneous treatment units included in this permit modification application; therefore, permit modification application headings pertaining to these hazardous waste management unit types are not applicable and are noted as such in the proposed modification application text. Where appropriate, the RSA permit documentation is referenced herein.

3.0 Justification

The addition of EDS units meets the major modification criteria described in AAC 335-14-8-.04(2)(a)1 as it is a substantial addition to the permit occurring after permit issuance.

OMB# 2050-0024; Expires 01/31/2017

SEND COMPLETED FORM TO: The Appropriate State or Regional Office.	United States Environmental Protection Agency **RCRA SUBTITLE C SITE IDENTIFICATION FORM**	

1. Reason for Submittal MARK ALL BOX(ES) THAT APPLY	**Reason for Submittal:** ☐ To provide an Initial Notification (first time submitting site identification information / to obtain an EPA ID number for this location) ☒ To provide a Subsequent Notification (to update site identification information for this location) ☐ As a component of a First RCRA Hazardous Waste Part A Permit Application ☒ As a component of a Revised RCRA Hazardous Waste Part A Permit Application (Amendment #_____) ☐ As a component of the Hazardous Waste Report (If marked, see sub-bullet below) ☐ Site was a TSD facility and/or generator of >1,000 kg of hazardous waste, >1 kg of acute hazardous waste, or >100 kg of acute hazardous waste spill cleanup in one or more months of the report year (or State equivalent LQG regulations)			
2. Site EPA ID Number	**EPA ID Number** A L 7 2 1 0 0 2 0 7 4 2			
3. Site Name	**Name:** US ARMY GARRISON-REDSTONE			
4. Site Location Information	**Street Address:** REDSTONE ARSENAL			
	City, Town, or Village: REDSTONE ARSENAL			**County:** MADISON
	State: ALABAMA	**Country:** UNITED STATES		**Zip Code:** 35898
5. Site Land Type	☐ Private ☐ County ☐ District ☑ Federal ☐ Tribal ☐ Municipal ☐ State ☐ Other			
6. NAICS Code(s) for the Site (at least 5-digit codes)	**A.** 9 2 8 1 1 0		**C.** 3 3 6 4 1 1	
	B. 5 4 1 7 1 2		**D.**	
7. Site Mailing Address	**Street or P.O. Box:** BUILDING 4488, MARTIN ROAD			
	City, Town, or Village: REDSTONE ARSENAL			
	State: ALABAMA	**Country:** UNITED STATES		**Zip Code:** 35898
8. Site Contact Person	**First Name:** TERRY	**MI:** W.	**Last:** HAZLE	
	Title: CHIEF, ENVIRONMENTAL MANAGEMENT DIVISION			
	Street or P.O. Box: BUILDING 4488, MARTIN ROAD			
	City, Town or Village: REDSTONE ARSENAL			
	State: ALABAMA	**Country:** UNITED STATES		**Zip Code:** 35898
	Email: terry.w.hazle.civ@mail.mil			
	Phone: 256-955-6967		**Ext.:**	**Fax:** 256-876-0887
9. Legal Owner and Operator of the Site	**A. Name of Site's Legal Owner:** US ARMY GARRISON-REDSTONE			**Date Became Owner:** 04/25/1986
	Owner Type: ☐ Private ☐ County ☐ District ☑ Federal ☐ Tribal ☐ Municipal ☐ State ☐ Other			
	Street or P.O. Box: BUILDING 4488, MARTIN ROAD			
	City, Town, or Village: REDSTONE ARSENAL			**Phone:** 256-955-6967
	State: ALABAMA	**Country:** UNITED STATES		**Zip Code:** 35898
	B. Name of Site's Operator: US Army Garrison-Redstone			**Date Became Operator:** 04/25/1986
	Operator Type: ☐ Private ☐ County ☐ District ☑ Federal ☐ Tribal ☐ Municipal ☐ State ☐ Other			

10. Type of Regulated Waste Activity (at your site)
Mark "Yes" or "No" for all current activities (as of the date submitting the form); complete any additional boxes as instructed.

A. Hazardous Waste Activities; Complete all parts 1-10.

Y ☑ N ☐ **1. Generator of Hazardous Waste**
If "Yes," mark only one of the following – a, b, or c.

- ☑ a. LQG: Generates, in any calendar month, 1,000 kg/mo (2,200 lbs/mo.) or more of hazardous waste; **or** Generates, in any calendar month, or accumulates at any time, more than 1 kg/mo (2.2 lbs/mo) of acute hazardous waste; **or** Generates, in any calendar month, **or** accumulates at any time, more than 100 kg/mo (220 lbs/mo) of acute hazardous spill cleanup material.
- ☐ b. SQG: 100 to 1,000 kg/mo (220 – 2,200 lbs/mo) of non-acute hazardous waste.
- ☐ c. CESQG: Less than 100 kg/mo (220 lbs/mo) of non-acute hazardous waste.

If "Yes" above, indicate other generator activities in 2-10.

Y ☐ N ☑ **2. Short-Term Generator** (generate from a short-term or one-time event and not from on-going processes). If "Yes," provide an explanation in the Comments section.

Y ☐ N ☑ **3. United States Importer of Hazardous Waste**

Y ☐ N ☑ **4. Mixed Waste (hazardous and radioactive) Generator**

Y ☐ N ☑ **5. Transporter of Hazardous Waste**
If "Yes," mark all that apply.

- ☐ a. Transporter
- ☐ b. Transfer Facility (at your site)

Y ☑ N ☐ **6. Treater, Storer, or Disposer of Hazardous Waste** Note: A hazardous waste Part B permit is required for these activities.

Y ☐ N ☑ **7. Recycler of Hazardous Waste**

Y ☐ N ☑ **8. Exempt Boiler and/or Industrial Furnace**
If "Yes," mark all that apply.

- ☐ a. Small Quantity On-site Burner Exemption
- ☐ b. Smelting, Melting, and Refining Furnace Exemption

Y ☑ N ☐ **9. Underground Injection Control**

Y ☐ N ☑ **10. Receives Hazardous Waste from Off-site**

B. Universal Waste Activities; Complete all parts 1-2.

Y ☑ N ☐ **1. Large Quantity Handler of Universal Waste (you accumulate 5,000 kg or more) [refer to your State regulations to determine what is regulated]. Indicate types of universal waste managed at your site. If "Yes," mark all that apply.**

- a. Batteries ☑
- b. Pesticides ☐
- c. Mercury containing equipment ☑
- d. Lamps ☑
- e. Other (specify) _____ ☐
- f. Other (specify) _____ ☐
- g. Other (specify) _____ ☐

Y ☐ N ☑ **2. Destination Facility for Universal Waste**
Note: A hazardous waste permit may be required for this activity.

C. Used Oil Activities; Complete all parts 1-4.

Y ☑ N ☐ **1. Used Oil Transporter**
If "Yes," mark all that apply.

- ☐ a. Transporter
- ☑ b. Transfer Facility (at your site)

Y ☑ N ☐ **2. Used Oil Processor and/or Re-refiner**
If "Yes," mark all that apply.

- ☐ a. Processor
- ☑ b. Re-refiner

Y ☐ N ☑ **3. Off-Specification Used Oil Burner**

Y ☐ N ☑ **4. Used Oil Fuel Marketer**
If "Yes," mark all that apply.

- ☐ a. Marketer Who Directs Shipment of Off-Specification Used Oil to Off-Specification Used Oil Burner
- ☐ b. Marketer Who First Claims the Used Oil Meets the Specifications

D. Eligible Academic Entities with Laboratories—Notification for opting into or withdrawing from managing laboratory hazardous wastes pursuant to 40 CFR Part 262 Subpart K

❖ You can ONLY Opt into Subpart K if:

- you are at least one of the following: a college or university; a teaching hospital that is owned by or has a formal affiliation agreement with a college or university; or a non-profit research institute that is owned by or has a formal affiliation agreement with a college or university; AND
- you have checked with your State to determine if 40 CFR Part 262 Subpart K is effective in your state

Y☐ N☑ 1. Opting into or currently operating under 40 CFR Part 262 Subpart K for the management of hazardous wastes in laboratories **See the item-by-item instructions for definitions of types of eligible academic entities. Mark all that apply:**

☐ **a. College or University**

☐ **b. Teaching Hospital that is owned by or has a formal written affiliation agreement with a college or university**

☐ **c. Non-profit Institute that is owned by or has a formal written affiliation agreement with a college or university**

Y☐ N☑ 2. Withdrawing from 40 CFR Part 262 Subpart K for the management of hazardous wastes in laboratories

11. Description of Hazardous Waste

A. Waste Codes for Federally Regulated Hazardous Wastes. Please list the waste codes of the Federal hazardous wastes handled at your site. List them in the order they are presented in the regulations (e.g., D001, D003, F007, U112). Use an additional page if more spaces are needed.

See						
Attachment 1						

B. Waste Codes for State-Regulated (i.e., non-Federal) Hazardous Wastes. Please list the waste codes of the State-Regulated hazardous wastes handled at your site. List them in the order they are presented in the regulations. Use an additional page if more spaces are needed.

NONE						

Attachment 1

11. Description of Hazardous Waste

Waste Codes for Federally Regulated Hazardous Wastes

D001	F001	P047	P120	U053	U121	U185	U243
D002	F002	P048	P121	U055	U122	U186	U244
D003	F003	P050	P122	U056	U123	U187	U246
D004	F004	P054	P123	U057	U124	U188	U247
D005	F005	P056	U001	U060	U125	U190	U359
D006	F006	P062	U002	U061	U126	U191	
D007	F007	P063	U003	U067	U127	U194	
D008	F008	P064	U004	U068	U128	U196	
D009	F009	P065	U006	U069	U129	U200	
D010	F027	P067	U007	U070	U130	U201	
D011	K045	P068	U008	U071	U131	U203	
D012	P001	P069	U009	U072	U132	U204	
D013	P003	P071	U010	U074	U133	U205	
D014	P005	P073	U011	U075	U134	U207	
D015	P006	P074	U012	U077	U135	U208	
D016	P009	P076	U014	U078	U136	U209	
D017	P010	P077	U015	U079	U138	U210	
D018	P011	P078	U017	U080	U139	U211	
D019	P012	P081	U019	U081	U140	U212	
D020	P013	P085	U020	U082	U141	U213	
D021	P014	P087	U021	U083	U142	U214	
D022	P015	P092	U022	U084	U144	U215	
D023	P016	P093	U023	U086	U145	U216	
D024	P020	P094	U025	U088	U146	U217	
D025	P021	P095	U028	U090	U147	U218	
D026	P022	P096	U029	U091	U148	U219	
D027	P023	P097	U031	U092	U150	U220	
D028	P024	P098	U032	U098	U151	U221	
D029	P028	P099	U033	U099	U153	U222	
D030	P029	P101	U034	U101	U154	U223	
D031	P030	P102	U036	U102	U158	U225	
D032	P031	P104	U037	U103	U159	U226	
D033	P033	P105	U039	U105	U160	U227	
D034	P034	P106	U042	U106	U161	U228	
D035	P036	P109	U043	U107	U162	U230	
D036	P038	P110	U044	U108	U165	U231	
D037	P039	P111	U045	U109	U167	U232	
D038	P040	P112	U046	U112	U169	U233	
D039	P041	P113	U047	U113	U170	U234	
D040	P042	P114	U048	U115	U171	U236	
D041	P043	P115	U050	U117	U182	U239	
D042	P044	P116	U051	U118	U183	U240	
D043	P045	P119	U052	U120	U184	U242	
43	43	43	43	43	43	43	5

306

12. Notification of Hazardous Secondary Material (HSM) Activity

Y ☐ N ☑ Are you notifying under 40 CFR 260.42 that you will begin managing, are managing, or will stop managing hazardous secondary material under 40 CFR 261.2(a)(2)(ii), 40 CFR 261.4(a)(23), (24), or (25)?

If "Yes," you must fill out the Addendum to the Site Identification Form: Notification for Managing Hazardous Secondary Material.

13. Comments

SECTION 1, Reason for Submittal: Addition of up to 24 storage units (igloos) for a total of 33 igloo storage units.

and addition of up to two (2) container treatment units (EDS)

SECTION 9B: Legal Owner and Operator of the Site:

Owner: The US Army Garrison-Redstone is the overall operator of the permit.

Operator of the Subpart X Open Burn/Open Detonation Unit: The US Army Aviation and Missile Research Development and Engineering Center (AMRDEC)

Operator Storage Units: US Army Garrison- Redstone

Operator EDS: US Army Recovered Chemical Materiel Directorate (RCMD).

RCMD will provide centralized management and direction for the treatment/destruction operations, including personnel.

14. Certification. I certify under penalty of law that this document and all attachments were prepared under my direction or supervision in accordance with a system designed to assure that qualified personnel properly gather and evaluate the information submitted. Based on my inquiry of the person or persons who manage the system, or those persons directly responsible for gathering the information, the information submitted is, to the best of my knowledge and belief, true, accurate, and complete. I am aware that there are significant penalties for submitting false information, including the possibility of fines and imprisonment for knowing violations. For the RCRA Hazardous Waste Part A Permit Application, all owner(s) and operator(s) must sign (see 40 CFR 270.10(b) and 270.11).

Signature of legal owner, operator, or an authorized representative	Name and Official Title (type or print)	Date Signed (mm/dd/yyyy)
	Laurence Gottschalk, Director (RCMD)	12/14/2015
	James B. Lackey, Director (AMRDEC)	12/18/2015
	COL. William L. Marks, II, Commander	12/18/2015

EPA ID Number | A | L | 7 | 2 | 1 | 0 | 0 | 2 | 0 | 7 | 4 | 2 |

OMB#: 2050-0024; Expires 01/31/2017

United States Environmental Protection Agency

HAZARDOUS WASTE PERMIT INFORMATION FORM

1. Facility Permit Contact	**First Name:** TERRY	**MI:** W.	**Last Name:** HAZLE
	Contact Title: CHIEF, ENVIRONMENTAL MANAGEMENT DIVISION		
	Phone: 256-955-6967	**Ext.:**	**Email:** terry.w.hazle.civ@mail.mil
2. Facility Permit Contact Mailing Address	**Street or P.O. Box:** BUILDING 4488, MARTIN ROAD		
	City, Town, or Village: REDSTONE ARSENAL		
	State: ALABAMA		
	Country: UNITED STATES	**Zip Code:** 35898-5000	
3. Operator Mailing Address and Telephone Number	**Street or P.O. Box:** 4488 Martin Road		
	City, Town, or Village: Redstone Arsenal		
	State: Alabama	**Phone:** 256-955-6967	
	Country: United States	**Zip Code:** 35898-5000	
4. Facility Existence Date	**Facility Existence Date (mm/dd/yyyy):** 03/01/1942		

5. Other Environmental Permits

A. Facility Type *(Enter code)*	B. Permit Number													C. Description
P	7	0	9	-	0	0	0	7						CAA TITLE V PERMIT
N	A	L	0	0	0	0	0	1	9					NPDES
R	4	5	-	0	3									SOLID WASTE LANDFILL
U	9	9	-	5	4	0								DRINKING WATER
N	5	5	9	2										NPDES
P	7	0	9	-	0	0	7	-	Z	0	1	0		CLEAN AIR ACT
P	7	0	9	-	0	0	7	-	Z	0	1	7		CLEAN AIR ACT
P	7	0	9	-	0	0	7	-	X	0	1	4		CLEAN AIR ACT
P	7	0	9	-	0	0	7	-	X	0	1	3		CLEAN AIR ACT
P	7	0	9	-	0	0	7	-	Z	0	1	9		CLEAN AIR ACT
P	7	0	9	-	0	0	7	-	Z	0	2	0		CLEAN AIR ACT
P	7	0	9	-	0	0	7	-	Z	0	2	1		CLEAN AIR ACT - Cont on p. 1a of 6

6. Nature of Business: Redstone Arsenal's mission includes: research, development, engineering, testing, procurement, production, and logistics support of operational missile and rocket systems. Also included are training, production, verification, and stockpile reliability activities.

Date Redstone began handling hazardous materials - March 1942

5. Other Environmental Permits (See Instructions)		
A. Facility Type *(Enter Code)*	**B. Permit Number**	**C. Description**
P	709-007-Z022	CLEAN AIR ACT
P	709-007-Z023	CLEAN AIR ACT
P	709-007-Z026	CLEAN AIR ACT
P	709-007-X018	CLEAN AIR ACT
P	709-007-X024	CLEAN AIR ACT
P	709-007-X025	CLEAN AIR ACT

7. Process Codes and Design Capacities – Enter information in the Section on Form Page 3

A. PROCESS CODE – Enter the code from the list of process codes below that best describes each process to be used at the facility. If more lines are needed, attach a separate sheet of paper with the additional information. For "other" processes (i.e., D99, S99, T04 and X99), describe the process (including its design capacity) in the space provided in Item 8.

B. PROCESS DESIGN CAPACITY – For each code entered in Item 7.A; enter the capacity of the process.

1. **AMOUNT – Enter the amount. In a case where design capacity is not applicable (such as in a closure/post-closure or enforcement action) enter the total amount of waste for that process.**
2. **UNIT OF MEASURE – For each amount entered in Item 7.B(1), enter the code in Item 7.B(2) from the list of unit of measure codes below that describes the unit of measure used. Select only from the units of measure in this list.**

C. PROCESS TOTAL NUMBER OF UNITS – Enter the total number of units for each corresponding process code.

Process Code	Process	Appropriate Unit of Measure for Process Design Capacity
	Disposal	
D79	Underground Injection Well Disposal	Gallons; Liters; Gallons Per Day; or Liters Per Day
D80	Landfill	Acre-feet; Hectares-meter; Acres; Cubic Meters; Hectares; Cubic Yards
D81	Land Treatment	Acres or Hectares
D82	Ocean Disposal	Gallons Per Day or Liters Per Day
D83	Surface Impoundment Disposal	Gallons; Liters; Cubic Meters; or Cubic Yards
D99	Other Disposal	Any Unit of Measure Listed Below
	Storage	
S01	Container	Gallons; Liters; Cubic Meters; or Cubic Yards
S02	Tank Storage	Gallons; Liters; Cubic Meters; or Cubic Yards
S03	Waste Pile	Cubic Yards or Cubic Meters
S04	Surface Impoundment	Gallons; Liters; Cubic Meters; or Cubic Yards
S05	Drip Pad	Gallons; Liters; Cubic Meters; Hectares; or Cubic Yards
S06	Containment Building Storage	Cubic Yards or Cubic Meters
S99	Other Storage	Any Unit of Measure Listed Below
	Treatment	
T01	Tank Treatment	Gallons Per Day; Liters Per Day
T02	Surface Impoundment	Gallons Per Day; Liters Per Day
T03	Incinerator	Short Tons Per Hour; Metric Tons Per Hour; Gallons Per Hour; Liters Per Hour; BTUs Per Hour; Pounds Per Hour; Short Tons Per Day; Kilograms Per Hour; Gallons Per Day; Metric Tons Per Hour; or Million BTU Per Hour
T04	Other Treatment	Gallons Per Day; Liters Per Day; Pounds Per Hour; Short Tons Per Hour; Kilograms Per Hour; Metric Tons Per Day; Short Tons Per Day; BTUs Per Hour; Gallons Per Day; Liters Per Hour; or Million BTU Per Hour
T80	Boiler	Gallons; Liters; Gallons Per Hour; Liters Per Hour; BTUs Per Hour; or Million BTU Per Hour

Process Code	Process	Appropriate Unit of Measure for Process Design Capacity (for T81 – T94)
	Treatment (Continued)	
T81	Cement Kiln	Gallons Per Day; Liters Per Day; Pounds Per Hour; Short Tons Per Hour; Kilograms Per Hour; Metric Tons Per Day; Metric Tons Per Hour; Short Tons Per Day; BTU Per Hour; Liters Per Hour; Kilograms Per Hour; or Million BTU Per Hour
T82	Lime Kiln	
T83	Aggregate Kiln	
T84	Phosphate Kiln	
T85	Coke Oven	
T86	Blast Furnace	
T87	Smelting, Melting, or Refining Furnace	
T88	Titanium Dioxide Chloride Oxidation Reactor	
T89	Methane Reforming Furnace	
T90	Pulping Liquor Recovery Furnace	
T91	Combustion Device Used in the Recovery of Sulfur Values from Spent Sulfuric Acid	
T92	Halogen Acid Furnaces	
T93	Other Industrial Furnaces Listed in 40 CFR 260.10	
T94	Containment Building Treatment	Cubic Yards; Cubic Meters; Short Tons Per Hour; Gallons Per Hour; Liters Per Hour; BTU Per Hour; Pounds Per Hour; Short Tons Per Day; Kilograms Per Hour; Metric Tons Per Day; Gallons Per Day; Liters Per Day; Metric Tons Per Hour; or Million BTU Per Hour
	Miscellaneous (Subpart X)	
X01	Open Burning/Open Detonation	Any Unit of Measure Listed Below
X02	Mechanical Processing	Short Tons Per Hour; Metric Tons Per Hour; Short Tons Per Day; Metric Tons Per Day; Pounds Per Hour; Kilograms Per Hour; Gallons Per Hour; Liters Per Hour; or Gallons Per Day
X03	Thermal Unit	Gallons Per Day; Liters Per Day; Pounds Per Hour; Short Tons Per Hour; Kilograms Per Hour; Metric Tons Per Day; Metric Tons Per Hour; Short Tons Per Day; BTU Per Hour; or Million BTU Per Hour
X04	Geologic Repository	Cubic Yards; Cubic Meters; Acre-feet; Hectare-meter; Gallons; or Liters
X99	Other Subpart X	Any Unit of Measure Listed Below

Unit of Measure	Unit of Measure Code
Gallons	**G**
Gallons Per Hour	**E**
Gallons Per Day	**U**
Liters	**L**
Liters Per Hour	**H**
Liters Per Day	**V**

Unit of Measure	Unit of Measure Code
Short Tons Per Hour	**D**
Short Tons Per Day	**N**
Metric Tons Per Hour	**W**
Metric Tons Per Day	**S**
Pounds Per Hour	**J**
Kilograms Per Hour	**X**
Million BTU Per Hour	**X**

Unit of Measure	Unit of Measure Code
Cubic Yards	**Y**
Cubic Meters	**C**
Acres	**B**
Acre-feet	**A**
Hectares	**Q**
Hectare-meter	**F**
BTU Per Hour	**I**

7. Process Codes and Design Capacities (Continued)

EXAMPLE FOR COMPLETING Item 7 (shown in line number X-1 below): A facility has a storage tank, which can hold 533.788 gallons.

Line Number		A. Process Code (From list above)			B. PROCESS DESIGN CAPACITY (1) Amount (Specify)	(2) Unit of Measure	C. Process Total Number of Units	For Official Use Only					
X	**1**	**S**	**0**	**2**	**533.788**	**G**	**001**						
	1	S	0	1	435,600	G*	033						
	2	X	0	1	5.175	N	012						
	3												
	4												
	5												
	6												
	7												
	8												
	9												
1	**0**												
1	**1**				*See Attachment 2								
1	**2**												
1	**3**												

Note: If you need to list more than 13 process codes, attach an additional sheet(s) with the information in the same format as above. Number the line sequentially, taking into account any lines that will be used for "other" process (i.e., D99, S99, T04, and X99) in Item 8.

8. Other Processes (Follow instructions from Item 7 for D99, S99, T04, and X99 process codes)

Line Number (Enter #s in sequence with Item 7)		A. Process Code (From list above)			B. PROCESS DESIGN CAPACITY (1) Amount (Specify)	(2) Unit of Measure	C. Process Total Number of Units	For Official Use Only					
X	**2**	**T**	**0**	**4**	**100.00**	**U**	**001**						
1		T	0	4	0.0043536	S*	002						
					*See Attachment 3								

Attachment 2

Calculation Assumptions

Hazardous Waste Storage Units (Addition of 24 Units for a total of 33 Units) for storing recovered munitions and other items

Estimated quantity of waste to be stored is based on design capacity of a storage unit (igloo) housing 55-gallon sized storage containers

- Storage Unit 26'5" x 81' = 13,200 maximum volume capacity in gallons.
- 13,200 maximum gallon capacity / 55 gallons = 240, 55-gallon drums (each storage unit)
- 33 – Storage Units × 240, 55-gallon drums = 7,920, 55-gallon drums or 435,600[a] gallons capacity.

Note:

[a] The maximum estimated quantity of hazardous waste that may be stored in the 33 storage units.

Attachment 3

Explosive Destruction System (EDS) Process Design Calculation

Treatment using the EDS is a batch process where one or more items may be processed at a time. The maximum number of items that can be treated is based on the amount of explosives (burster and fuse) items contain and the amount of donor charge needed to access the items. At no time will the total net explosive weight (NEW) [a] limit of an EDS be exceeded.

Each EDS Phase 2 units is capable of safely withstanding up to 4.8 pounds of TNT equivalent explosives for each detonation and one detonation per day. Up to two EDS units will be operated at the RSA-EDS site.

The following calculation represents the maximum treatment design capacity scenario.

Estimated quantity of waste treated in the EDS:

A single EDS Phase 2 unit can process 4.8 lbs/day NEW[a]

- $\frac{4.8 \text{ pounds}}{\text{Day}} \times \frac{1 \text{ metric ton}}{2204.62 \text{ pounds}} = \frac{.0021768 \text{ metric ton}}{\text{day}}$ per EDS Unit

Maximum capacity for 2 EDS units:

- $\frac{.0021768 \text{ metric ton}}{\text{day}} \times 2 \text{ EDS units} = \frac{0.0043536 \text{ metric ton}}{\text{day}}$

Note:

[a] NEW = The actual weight (in pounds) of explosive mixtures or compounds, including the trinitrotoluene equivalent of energetic material that is used in determining explosive limits.

(This page intentionally left blank.)

9. Description of Hazardous Wastes - Enter Information in the Sections on Form Page 5

A. EPA HAZARDOUS WASTE NUMBER – Enter the four-digit number from 40 CFR, Part 261 Subpart D of each listed hazardous waste you will handle. For hazardous wastes which are not listed in 40 CFR, Part 261 Subpart D, enter the four-digit number(s) from 40 CFR Part 261, Subpart C that describes the characteristics and/or the toxic contaminants of those hazardous wastes.

B. ESTIMATED ANNUAL QUANTITY – For each listed waste entered in Item 9.A, estimate the quantity of that waste that will be handled on an annual basis. For each characteristic or toxic contaminant entered in Item 9.A, estimate the total annual quantity of all the non-listed waste(s) that will be handled which possess that characteristic or contaminant.

C. UNIT OF MEASURE – For each quantity entered in Item 9.B, enter the unit of measure code. Units of measure which must be used and the appropriate codes are:

ENGLISH UNIT OF MEASURE	CODE	METRIC UNIT OF MEASURE	CODE
POUNDS	P	KILOGRAMS	K
TONS	T	METRIC TONS	M

If facility records use any other unit of measure for quantity, the units of measure must be converted into one of the required units of measure, taking into account the appropriate density or specific gravity of the waste.

D. PROCESSES

1. PROCESS CODES:

For listed hazardous waste: For each listed hazardous waste entered in Item 9.A, select the code(s) from the list of process codes contained in Items 7.A and 8.A on page 3 to indicate all the processes that will be used to store, treat, and/or dispose of all listed hazardous wastes.

For non-listed waste: For each characteristic or toxic contaminant entered in Item 9.A, select the code(s) from the list of process codes contained in Items 7.A and 8.A on page 3 to indicate all the processes that will be used to store, treat, and/or dispose of all the non-listed hazardous wastes that possess that characteristic or toxic contaminant.

NOTE: THREE SPACES ARE PROVIDED FOR ENTERING PROCESS CODES. IF MORE ARE NEEDED:

1. **Enter the first two as described above.**
2. **Enter "000" in the extreme right box of Item 9.D(1).**
3. **Use additional sheet, enter line number from previous sheet, and enter additional code(s) in Item 9.E.**

2. PROCESS DESCRIPTION: If code is not listed for a process that will be used, describe the process in Item 9.D(2) or in Item 9.E(2).

NOTE: HAZARDOUS WASTES DESCRIBED BY MORE THAN ONE EPA HAZARDOUS WASTE NUMBER – Hazardous wastes that can be described by more than one EPA Hazardous Waste Number shall be described on the form as follows:

1. **Select one of the EPA Hazardous Waste Numbers and enter it in Item 9.A. On the same line complete Items 9.B, 9.C, and 9.D by estimating the total annual quantity of the waste and describing all the processes to be used to store, treat, and/or dispose of the waste.**
2. **In Item 9.A of the next line enter the other EPA Hazardous Waste Number that can be used to describe the waste. In Item 9.D.2 on that line enter "included with above" and make no other entries on that line.**
3. **Repeat step 2 for each EPA Hazardous Waste Number that can be used to describe the hazardous waste.**

EXAMPLE FOR COMPLETING Item 9 (shown in line numbers X-1, X-2, X-3, and X-4 below) – A facility will treat and dispose of an estimated 900 pounds per year of chrome shavings from leather tanning and finishing operations. In addition, the facility will treat and dispose of three non-listed wastes. Two wastes are corrosive only and there will be an estimated 200 pounds per year of each waste. The other waste is corrosive and ignitable and there will be an estimated 100 pounds per year of that waste. Treatment will be in an incinerator and disposal will be in a landfill.

Line Number		A. EPA Hazardous Waste No. (Enter code)				B. Estimated Annual Qty of Waste	C. Unit of Measure (Enter code)	D. PROCESSES									
								(1) PROCESS CODES (Enter Code)									(2) PROCESS DESCRIPTION (If code is not entered in 9.D(1))
X	1	K	0	5	4	900	P	T	0	3	D	8	0				
X	2	D	0	0	2	400	P	T	0	3	D	8	0				
X	3	D	0	0	1	100	P	T	0	3	D	8	0				
X	4	D	0	0	2												Included With Above

9. Description of Hazardous Wastes ***(Continued. Use additional sheet(s) as necessary; number pages as 5a, etc.)***

Line Number		A. EPA Hazardous Waste No. (Enter code)				B. Estimated Annual Qty of Waste	C. Unit of Measure (Enter code)	D. PROCESSES									
								(1) PROCESS CODES (Enter Code)									(2) PROCESS DESCRIPTION (If code is not entered in 9.D(1))
	1	D	0	0	1	75,000	P	S	0	1							
	2	D	0	0	2	25,000	P	S	0	1							
	3	D	0	0	3	100,000	P	S	0	1							
	4	D	0	0	4	10,000	P	S	0	1							
	5	D	0	0	5	200,000	P	S	0	1							
	6	D	0	0	6	200,000	P	S	0	1							
	7	D	0	0	7	200,000	P	S	0	1							
	8	D	0	0	8	300,000	P	S	0	1							
	9	D	0	0	9	3,000	P	S	0	1							
1	0	D	0	1	0	10	P	S	0	1							
1	1	D	0	1	1	2,500	P	S	0	1							
1	2	D	0	1	2	5	P	S	0	1							
1	3	D	0	1	3	5	P	S	0	1							
1	4	D	0	1	4	5	P	S	0	1							
1	5	D	0	1	5	5	P	S	0	1							
1	6	D	0	1	6	2,000	P	S	0	1							
1	7	D	0	1	7	2,000	P	S	0	1							
1	8	D	0	1	8	125,000	P	S	0	1							
1	9	D	0	1	9	500	P	S	0	1							
2	0	D	0	2	0	5	P	S	0	1							
2	1	D	0	2	1	200	P	S	0	1							
2	2	D	0	2	2	228	P	S	0	1							
2	3	D	0	2	3	10	P	S	0	1							
2	4																
2	5																
2	6																
2	7																
2	8																
2	9																
3	0																
3	1																
3	2																
3	3																
3	4																
3	5																
3	6																Cont on page 5a thru 5h of 6

ID Number *(Enter from page 1)*					
A L 7 2 1 0 0 2 0 7 4 2					
9. Description of Hazardous Wastes (Continued)					
Line Number	**A. EPA Hazardous Waste No. (Enter code)**	**B. Estimated Annual Quantity of Waste**	**C. Unit of Measure (Enter Code)**	**D. Processes**	
				(1) Process Codes (Enter Code)	**(2) Process Description (if a Code is not Entered in 9.D(1))***
24	D024	10	P	S01	
25	D025	10	P	S01	
26	D026	301	P	S01	
27	D027	7,500	P	S01	
28	D028	27	P	S01	
29	D029	50,000	P	S01	
30	D030	5	P	S01	
31	D031	5	P	S01	
32	D032	5	P	S01	
33	D033	5	P	S01	
34	D034	10	P	S01	
35	D035	15,000	P	S01	
36	D036	20	P	S01	
37	D037	1,000	P	S01	
38	D038	100	P	S01	
39	D039	125,000	P	S01	
40	D040	200,000	P	S01	
41	D041	24,000	P	S01	
42	D042	5	P	S01	
43	D043	5	P	S01	
44	F001	200,000	P	S01	
45	F002	150,000	P	S01	
46	F003	5,500	P	S01	
47	F004	1,500	P	S01	
48	F005	80,000	P	S01	
49	F006	10	P	S01	
50	F007	10	P	S01	
51	F008	5	P	S01	
52	F009	5	P	S01	
53	F027	5	P	S01	
54	K045	3,000	P	S01	

ID Number *(Enter from page 1)*					
A L 7 2 1 0 0 2 0 7 4 2					
9. Description of Hazardous Wastes (Continued)					
Line Number	**A. EPA Hazardous Waste No. (Enter code)**	**B. Estimated Annual Quantity of Waste**	**C. Unit of Measure (Enter Code)**	**D. Processes**	
				(1) Process Codes (Enter Code)	**(2) Process Description (if a Code is not Entered in 9.D(1))***
55	P001	5	P	S01	
56	P003	5	P	S01	
57	P005	5	P	S01	
58	P006	5	P	S01	
59	P009	5	P	S01	
60	P010	5	P	S01	
61	P011	5	P	S01	
62	P012	10	P	S01	
63	P013	5	P	S01	
64	P014	5	P	S01	
65	P015	15	P	S01	
66	P016	5	P	S01	
67	P020	5	P	S01	
68	P021	5	P	S01	
69	P022	10	P	S01	
70	P023	5	P	S01	
71	P024	5	P	S01	
72	P028	10	P	S01	
73	P029	5	P	S01	
74	P030	10,000	P	S01	
75	P031	5	P	S01	
76	P033	5	P	S01	
77	P034	5	P	S01	
78	P036	5	P	S01	
79	P038	5	P	S01	
80	P039	5	P	S01	
81	P040	5	P	S01	
82	P041	5	P	S01	
83	P042	10	P	S01	
84	P043	5	P	S01	

ID Number *(Enter from page 1)*					
A L 7 2 1 0 0 2 0 7 4 2					
9. Description of Hazardous Wastes (Continued)					
Line Number	**A. EPA Hazardous Waste No. (Enter code)**	**B. Estimated Annual Quantity of Waste**	**C. Unit of Measure (Enter Code)**	**D. Processes**	
				(1) Process Codes (Enter Code)	**(2) Process Description (if a Code is not Entered in 9.D(1))***
85	P044	5	P	S01	
86	P045	5	P	S01	
87	P047	5	P	S01	
88	P048	10	P	S01	
89	P050	5	P	S01	
90	P054	5	P	S01	
91	P056	5	P	S01	
92	P062	5	P	S01	
93	P063	5	P	S01	
94	P064	5	P	S01	
95	P065	5	P	S01	
96	P067	5	P	S01	
97	P068	5	P	S01	
98	P069	5	P	S01	
99	P071	5	P	S01	
100	P073	5	P	S01	
101	P074	5	P	S01	
102	P076	5	P	S01	
103	P077	5	P	S01	
104	P078	5	P	S01	
105	P081	5	P	S01	
106	P085	5	P	S01	
107	P087	5	P	S01	
108	P092	5	P	S01	
109	P093	5	P	S01	
110	P094	5	P	S01	
111	P095	5	P	S01	
112	P096	5	P	S01	
113	P097	5	P	S01	
114	P098	2,000	P	S01	

ID Number *(Enter from page 1)*					
A L 7 2 1 0 0 2 0 7 4 2					
9. Description of Hazardous Wastes (Continued)					
Line Number	**A. EPA Hazardous Waste No. (Enter code)**	**B. Estimated Annual Quantity of Waste**	**C. Unit of Measure (Enter Code)**	**D. Processes**	
				(1) Process Codes (Enter Code)	**(2) Process Description (if a Code is not Entered in 9.D(1))***
115	P099	5	P	S01	
116	P101	10	P	S01	
117	P102	10	P	S01	
118	P104	10	P	S01	
119	P105	5	P	S01	
120	P106	5	P	S01	
121	P109	5	P	S01	
122	P110	5	P	S01	
123	P111	5	P	S01	
124	P112	5	P	S01	
125	P113	5	P	S01	
126	P114	5	P	S01	
127	P115	5	P	S01	
128	P116	5	P	S01	
129	P119	20	P	S01	
130	P120	5	P	S01	
131	P121	5	P	S01	
132	P122	5	P	S01	
133	P123	5	P	S01	
134	U001	5	P	S01	
135	U002	50	P	S01	
136	U003	7	P	S01	
137	U004	5	P	S01	
138	U006	5	P	S01	
139	U007	5	P	S01	
140	U008	10	P	S01	
141	U009	21	P	S01	
142	U010	5	P	S01	
143	U011	5	P	S01	
144	U012	5	P	S01	

ID Number *(Enter from page 1)*					
A L 7 2 1 0 0 2 0 7 4 2					
9. Description of Hazardous Wastes (Continued)					
Line Number	**A. EPA Hazardous Waste No. (Enter code)**	**B. Estimated Annual Quantity of Waste**	**C. Unit of Measure (Enter Code)**	**D. Processes**	
				(1) Process Codes (Enter Code)	**(2) Process Description (if a Code is not Entered in 9.D(1))***
145	U014	5	P	S01	
146	U015	100	P	S01	
147	U017	5	P	S01	
148	U019	100	P	S01	
149	U020	5	P	S01	
150	U021	5	P	S01	
151	U022	5	P	S01	
152	U023	5	P	S01	
153	U025	5	P	S01	
154	U028	10	P	S01	
155	U029	5	P	S01	
156	U031	25	P	S01	
157	U032	50	P	S01	
158	U033	5	P	S01	
159	U034	5	P	S01	
160	U036	5	P	S01	
161	U037	200	P	S01	
162	U039	5	P	S01	
163	U042	5	P	S01	
164	U043	5	P	S01	
165	U044	50	P	S01	
166	U045	5	P	S01	
167	U046	5	P	S01	
168	U047	5	P	S01	
169	U048	5	P	S01	
170	U050	5	P	S01	
171	U051	5	P	S01	
172	U052	10	P	S01	
173	U053	5	P	S01	
174	U055	5.5	P	S01	

ID Number *(Enter from page 1)*					
A L 7 2 1 0 0 2 0 7 4 2					
9. Description of Hazardous Wastes (Continued)					
Line Number	**A. EPA Hazardous Waste No. (Enter code)**	**B. Estimated Annual Quantity of Waste**	**C. Unit of Measure (Enter Code)**	**D. Processes**	
				(1) Process Codes (Enter Code)	**(2) Process Description (if a Code is not Entered in 9.D(1))***
175	U056	5	P	S01	
176	U057	20	P	S01	
177	U060	5	P	S01	
178	U061	5	P	S01	
179	U067	5	P	S01	
180	U068	5	P	S01	
181	U069	10	P	S01	
182	U070	5	P	S01	
183	U071	5	P	S01	
184	U072	5	P	S01	
185	U074	5	P	S01	
186	U075	5	P	S01	
187	U077	2,300	P	S01	
188	U078	5	P	S01	
189	U079	5	P	S01	
190	U080	3,400	P	S01	
191	U081	5	P	S01	
192	U082	5	P	S01	
193	U083	5	P	S01	
194	U084	5	P	S01	
195	U086	5	P	S01	
196	U088	5	P	S01	
197	U090	5	P	S01	
198	U091	5	P	S01	
199	U092	5	P	S01	
200	U098	360	P	S01	
201	U099	5	P	S01	
202	U101	5	P	S01	
203	U102	5	P	S01	
204	U103	5	P	S01	

ID Number *(Enter from page 1)*					
A L 7 2 1 0 0 2 0 7 4 2					
9. Description of Hazardous Wastes (Continued)					
Line Number	**A. EPA Hazardous Waste No. (Enter code)**	**B. Estimated Annual Quantity of Waste**	**C. Unit of Measure (Enter Code)**	**D. Processes**	
				(1) Process Codes (Enter Code)	**(2) Process Description (if a Code is not Entered in 9.D(1))***
205	U105	5	P	S01	
206	U106	5	P	S01	
207	U107	5	P	S01	
208	U108	50	P	S01	
209	U109	5	P	S01	
210	U112	200	P	S01	
211	U113	5	P	S01	
212	U115	5	P	S01	
213	U117	5	P	S01	
214	U118	5	P	S01	
215	U120	5	P	S01	
216	U121	5	P	S01	
217	U122	20	P	S01	
218	U123	5	P	S01	
219	U124	5	P	S01	
220	U125	5	P	S01	
221	U126	5	P	S01	
222	U127	5	P	S01	
223	U128	5	P	S01	
224	U129	5	P	S01	
225	U130	5	P	S01	
226	U131	5	P	S01	
227	U132	5	P	S01	
227	U133	12,000	P	S01	
229	U134	5	P	S01	
230	U135	5	P	S01	
231	U136	5	P	S01	
232	U138	5	P	S01	
233	U139	5	P	S01	
234	U140	10.5	P	S01	

ID Number *(Enter from page 1)*					
A L 7 2 1 0 0 2 0 7 4 2					
9. Description of Hazardous Wastes (Continued)					
Line Number	**A. EPA Hazardous Waste No. (Enter code)**	**B. Estimated Annual Quantity of Waste**	**C. Unit of Measure (Enter Code)**	**D. Processes**	
				(1) Process Codes (Enter Code)	**(2) Process Description (if a Code is not Entered in 9.D(1))***
235	U141	5	P	S01	
236	U142	5	P	S01	
237	U144	5	P	S01	
238	U145	5	P	S01	
239	U146	5	P	S01	
240	U147	75	P	S01	
241	U148	5	P	S01	
242	U150	50	P	S01	
243	U151	10	P	S01	
244	U153	5	P	S01	
245	U154	1,000	P	S01	
246	U158	400	P	S01	
247	U159	500	P	S01	
248	U160	5	P	S01	
249	U161	5	P	S01	
250	U162	5	P	S01	
251	U165	5	P	S01	
252	U167	5	P	S01	
253	U169	20	P	S01	
254	U170	5	P	S01	
255	U171	5	P	S01	
256	U182	5	P	S01	
257	U183	5	P	S01	
258	U184	5	P	S01	
259	U185	5	P	S01	
260	U186	5	P	S01	
261	U187	5	P	S01	
262	U188	100	P	S01	
263	U190	20	P	S01	
264	U191	5	P	S01	

ID Number *(Enter from page 1)*					
A L 7 2 1 0 0 2 0 7 4 2					
9. Description of Hazardous Wastes (Continued)					
Line Number	**A. EPA Hazardous Waste No. (Enter code)**	**B. Estimated Annual Quantity of Waste**	**C. Unit of Measure (Enter Code)**	**D. Processes**	
				(1) Process Codes (Enter Code)	**(2) Process Description (if a Code is not Entered in 9.D(1))***
265	U194	5	P	S01	
266	U196	10	P	S01	
267	U200	5	P	S01	
268	U201	5	P	S01	
269	U203	5	P	S01	
270	U204	5	P	S01	
271	U205	5	P	S01	
272	U207	5	P	S01	
273	U208	5	P	S01	
274	U209	5	P	S01	
275	U210	500	P	S01	
276	U211	500	P	S01	
277	U212	400	P	S01	
278	U213	5	P	S01	
279	U214	5	P	S01	
280	U215	5	P	S01	
281	U216	5	P	S01	
282	U217	5	P	S01	
283	U218	5	P	S01	
284	U219	10	P	S01	
285	U220	400	P	S01	
286	U221	5	P	S01	
287	U222	10	P	S01	
288	U223	10	P	S01	
289	U225	5	P	S01	
290	U226	500	P	S01	
291	U227	100	P	S01	
292	U228	1,000	P	S01	
293	U230	5	P	S01	
294	U231	5	P	S01	

ID Number *(Enter from page 1)*					
A L 7 2 1 0 0 2 0 7 4 2					
9. Description of Hazardous Wastes (Continued)					
Line Number	**A. EPA Hazardous Waste No. (Enter code)**	**B. Estimated Annual Quantity of Waste**	**C. Unit of Measure (Enter Code)**	**D. Processes**	
				(1) Process Codes (Enter Code)	**(2) Process Description (if a Code is not Entered in 9.D(1))***
295	U232	5	P	S01	
296	U233	5	P	S01	
297	U234	5	P	S01	
298	U236	5	P	S01	
299	U239	250	P	S01	
300	U240	5	P	S01	
301	U242	5	P	S01	
302	U243	5	P	S01	
303	U244	5	P	S01	
304	U246	5	P	S01	
305	U247	5	P	S01	
306	U359	5	P	S01	
307	D001	68.75	T	X01	
308	D002			X01	Included with above
309	D003			X01	Included with above
310	D004			X01	Included with above
311	D005			X01	Included with above
312	D006			X01	Included with above
313	D007			X01	Included with above
314	D008			X01	Included with above
315	D009			X01	Included with above
316	D010			X01	Included with above
317	D011			X01	Included with above
318	D018			X01	Included with above
319	D019			X01	Included with above
320	D021			X01	Included with above
321	D022			X01	Included with above
322	D023			X01	Included with above
323	D024			X01	Included with above
324	D025			X01	Included with above
325	D026			X01	Included with above
326	D027			X01	Included with above
327	D028			X01	Included with above
328	D029			X01	Included with above
329	D030			X01	Included with above
330	D032			X01	Included with above
331	D035			X01	Included with above
332	D036			X01	Included with above
333	D038			X01	Included with above

ID Number *(Enter from page 1)*					
A L 7 2 1 0 0 2 0 7 4 2					
9. Description of Hazardous Wastes (Continued)					
Line Number	**A. EPA Hazardous Waste No. (Enter code)**	**B. Estimated Annual Quantity of Waste**	**C. Unit of Measure (Enter Code)**	**D. Processes**	
				(1) Process Codes (Enter Code)	**(2) Process Description (if a Code is not Entered in 9.D(1))***
334	D039			X01	Included with above
335	D040			X01	Included with above
336	F001			X01	Included with above
337	F002			X01	Included with above
338	F003			X01	Included with above
339	F004			X01	Included with above
340	F005			X01	Included with above
341	U133			X01	Included with above
342	D001	1,500	P	T04	
343	D002			T04	Included with above
344	D003			T04	Included with above
345	D004			T04	Included with above
346	D005			T04	Included with Above
347	D006			T04	Included with Above
348	D007			T04	Included with Above
349	D008			T04	Included with Above
350	D009			T04	Included with Above
351	D010			T04	Included with Above
352	D011			T04	Included with Above
353	D018			T04	Included with Above
354	D019			T04	Included with Above
355	D022			T04	Included with Above
356	D028			T04	Included with Above
357	D029			T04	Included with Above
358	D030			T04	Included with Above
359	D034			T04	Included with Above
360	D039			T04	Included with Above
361	D040			T04	Included with Above
362	D043			T04	Included with Above
363	P036			T04	Included with Above
364	P095			T04	Included with Above

10. Map

Attach to this application a topographical map, or other equivalent map, of the area extending to at least one mile beyond property boundaries. The map must show the outline of the facility, the location of each of its existing intake and discharge structures, each of its hazardous waste treatment, storage, or disposal facilities, and each well where it injects fluids underground. Include all spring, rivers, and other surface water bodies in this map area. See instructions for precise requirements.

11. Facility Drawing

All existing facilities must include a scale drawing of the facility (see instructions for more detail).

12. Photographs

All existing facilities must include photographs (aerial or ground-level) that clearly delineate all existing structures; existing storage, treatment, and disposal areas; and sites of future storage, treatment, or disposal areas (see instructions for more detail).

13. Comments

Section 3: Operator Mailing Address and Telephone Number:

Operator (Storage Units): US ARMY GARRISON-REDSTONE
BUILDING 4488, MARTIN ROAD
REDSTONE ARSENAL, AL (USA) 35898
256-842-1448

Operator (EDS): US ARMY RCMD
BUILDING E4585, HOADLEY ROAD
ABERDEEN PROVING GROUND, MD (USA) 21010

Section 7: Process Codes and Design Capacities
There will be an additional 24 igloos for a total of 33 igloos used for container storage of recovered chemical-filled munitions and other items. The maximum storage for each igloo is 13,200 gallons, which will allow up to 240, 55-gallon drums* to be stored in each igloo for a combined total additional capacity of 7,920, 55-gallon drums, or 435,600 gallons of waste. See Attachment 2 for Storage Units volume calculations.

The weights for line 2 (process code X01) are expressed as net explosive weight.

Section 8: Other Processes
The treatment capacity of an Explosive Destruction System (EDS) Phase 2 unit is 4.8 Ibs net explosive weight per day. See Attachment 3 for process design calculations. Explosives shaped charges are used to detonate a munition burster (if present) and breach the munition wall exposing the chemical fill. A predetermined amount of reagent is added to treat the chemical fill and explosive residue. Agitation with heat (if required) follows. Liquid and solid wastes generated from the treatment process are then removed from the Containment Vessel, containerized (in 55-gallon drums) and placed in a hazardous waste storage area for offsite disposition.

Section 10: Map
See Topographical Map(s) referenced in Part II, Section B of the AHWMMA Hazardous Waste Permit Modification. The RSA-EDS site will be located within the 8200 series block of the RSA storage igloos area or other location at RSA as deemed necessary for emergency response.

Sections 11 and 12: Facility Drawing and Photographs
Section B in the RCRA Permit Modification.

*For calculation purposes, 55-gallon drums are assumed.

PREFACE

The Recovered Chemical Materiel Directorate (RCMD) is tasked with providing and operating the Explosive Destruction System (EDS) at Redstone Arsenal (RSA), Alabama, for the onsite treatment/destruction of recovered munitions or other items that contain chemical agent or industrial chemical fills.

Up to two EDS units will be deployed to support the overall goals of (1) destroying recovered chemical-filled items in compliance with the Chemical Weapons Convention (CWC) and Public Law and (2) conducting the treatment/destruction activities in a safe, environmentally acceptable, and cost-effective manner.

This Alabama Hazardous Wastes Management Minimization Act (AHWMMA) Hazardous Waste Facility Permit AL7 210 020 742 permit modification application contains information for EDS hazardous waste operations at RSA and addresses only the Redstone Arsenal Explosive Destruction System (RSA-EDS) site operations. Other hazardous waste operations at RSA are governed by other applications and/or permits; however, where applicable, RSA permits and documentation are referenced herein.

The EDS units are classified as containers. There will be no permitted hazardous waste tank storage, incineration, land disposal, waste piles, containment building, or miscellaneous treatment units at the RSA-EDS site; therefore, permit modification application headings pertaining to these hazardous waste management unit types are not applicable and are noted as such.

This part of the permit modification application consists of the following:

Preface PREFACE

Section B FACILITY DESCRIPTION

Attachment B-1

Section C WASTE CHARACTERISTICS

Attachments C-1 through C-5

Section D PROCESS DESCRIPTION

Attachments D-1 through D-4

Section E GROUNDWATER MONITORING SYSTEMS

Section F PROCEDURES TO PREVENT HAZARDS

Attachments F-1 through F-3

Section G CONTINGENCY PLAN

Section H PERSONNEL TRAINING

Attachments H-1 and H-2

Section I CLOSURE, POST-CLOSURE, AND FINANCIAL REQUIREMENTS

Section J CORRECTIVE ACTION FOR SOLID WASTE MANAGEMENT UNITS

Section K OTHER FEDERAL LAWS

Section L CERTIFICATION

Section M TECHNICAL DATA PACKAGE

(This page intentionally left blank.)

LIST OF ACRONYMS

AAC	ADEM Administrative Code
ADEM	Alabama Department of Environmental Management
AED	automatic external defibrillator
AFS	Air Filtration System
AFSS	Advanced Fragment Suppression System
AHWMMA	Alabama Hazardous Wastes Management and Minimization Act
amp	ampere
ASME	American Society of Mechanical Engineers
ASTM	American Society for Testing and Materials
CERCLA	Comprehensive Environmental Response, Compensation, and Liability Act
CFR	Code of Federal Regulations
CG	phosgene
CNB	carbon tetrachloride + chloroacetophenone + benzene
CNS	chloroacetophenone + chloropicrin + chloroform
CPR	cardiopulmonary resuscitation
CSC	conical-shaped charge
CWC	Chemical Weapons Convention
CWM	chemical warfare materiel
DA	diphenylchloroarsine
DA Pam	Department of the Army Pamphlet
DAAMS	Depot Area Air Monitoring System
DES	Directorate of Emergency Services
DMS	Data Management System
DoD	Department of Defense
DOT	Department of Transportation
DPW	Department of Public Works
EA	Environmental Assessment
ECBC	Edgewood Chemical Biological Center
EDS	Explosive Destruction System
EMD	Environmental Management Division
EMT	Emergency Medical Technician

EOD	explosive ordnance disposal
EPA	U.S. Environmental Protection Agency
EPDM	ethylene propylene diene monomer
FM	Field Manual
FM smoke	titanium tetrachloride
FS smoke	sulfur trioxide + chlorosulfonic acid
FSS	Fragment Suppression System
GPOS	General Purpose Operations Shelter
GTR	German Traktor Rocket
H	Levinstein mustard
HAZCOM	hazard communications
HAZWOPER	Hazardous Waste Operations and Emergency Response
HD	distilled sulfur mustard
HEGA	high efficiency gas adsorber
HEMSI	Huntsville Emergency Medical Services Incorporated
HEPA	high efficiency particulate air
HN-3	nitrogen mustard
HS	sulfur mustard
HT	mustard-T mixture
HWSA	Hazardous Waste Storage Area
IC	Incident Commander
IDLH	immediately dangerous to life and health
IM	interim measure
IOC	Installation Operations Center
IRT	Installation Response Team
ISCP	Installation Spill Contingency Plan
kPa	kilopascal
kW	kilowatt

L	lewisite
LDR	Land Disposal Regulation
LSC	linear-shaped charge
m^3	cubic meter
MAP	Mobile Analytical Platform
MARB	Materiel Assessment Review Board
MEA	monoethanolamine
mg/L	milligram per liter
MSFC	Marshall Space Flight Center
$NaMnO_4$	sodium permanganate
NaOCl	sodium hypochlorite
NaOH	sodium hydroxide
NASA	National Aeronautics and Space Administration
NEC	National Electric Code
NELAP	National Environmental Laboratory Accreditation Program
NEMA	National Electrical Manufacturer's Association
NEPA	National Environmental Policy Act
NEW	net explosive weight
NFPA	National Fire Protection Association
NRC	National Response Center
NRT	near real-time
OSC	On-Scene Coordinator
OSHA	Occupational Safety and Health Administration
PCB	polychlorinated biphenyl
PD	phenyldichloroarsine
PDS	Personnel Decontamination Station
PEIS	Programmatic Environmental Impact Statement
PINS	portable isotopic neutron spectroscopy
PMCS	preventive maintenance checks and services
PPE	personal protective equipment
ppm	parts per million

ppmw	parts per million by weight
psi	pounds per square inch
QA/QC	quality assurance/quality control
RCMD	Recovered Chemical Materiel Directorate
RCRA	Resource Conservation and Recovery Act
RDX	cyclonite
RSA	Redstone Arsenal
RSA-EDS	Redstone Arsenal-Explosive Destruction System
SCBA	self-contained breathing apparatus
SHO	Safety and Health Officer
SIC	sulfur-impregnated carbon
SME	subject matter expert
SOP	Standing Operating Procedure
SPCC	Spill Prevention, Control, and Countermeasure
STEL	short-term exposure limit
SWMU	solid waste management unit
TNT	trinitrotoluene
TSDF	treatment, storage, and disposal facility
TVA	Tennessee Valley Authority
UBC	Uniform Building Code
UL	Underwriters Laboratory
UN	United Nations
USFWS	U.S. Fish and Wildlife Service
V	volt
VCS	Vapor Containment Structure
VSL	vapor screening level
WNWR	Wheeler National Wildlife Refuge

TABLE OF CONTENTS

Section	Title	Page
PREFACE		i
LIST OF ACRONYMS		v
LIST OF FIGURES		xxi
LIST OF TABLES		xxiii
LIST OF ATTACHMENTS		xxv
B	FACILITY DESCRIPTION	B-1-1
B-1	GENERAL DESCRIPTION	B-1-1
B-1a	Recovered Chemical Materiel Directorate (RCMD)	B-1-2
B-1b	Overview of the RSA-EDS Operations	B-1-3
B-1b(1)	RSA-EDS Primary Process and Support Structures	B-1-3
B-1b(2)	EDS Process Overview	B-1-3
B-1c	Hazardous Waste Treatment Units to Be Permitted	B-1-4
B-1d	Hazardous Wastes Managed	B-1-4
B-2	TOPOGRAPHIC MAP	B-2-1
B-2a	General Requirements	B-2-1
B-2b	Additional Information Requirements	B-2-3
B-3	LOCATION INFORMATION	B-3-1
B-3a	Seismic Standard	B-3-1
B-3b	Floodplain Standards	B-3-1
B-4	TRAFFIC INFORMATION	B-4-1
C	WASTE CHARACTERISTICS	C-1-1
C-1	CHEMICAL AND PHYSICAL ANALYSES	C-1-1
C-1a	Containerized Wastes	C-1-2

TABLE OF CONTENTS (Continued)

Section	Title	Page
C-1a(1)	Chemical Fills	C-1-3
C-1a(2)	Energetics	C-1-3
C-1a(3)	Characterization Prior to Treatment	C-1-3
C 1a(4)	Treatment Effectiveness	C-1-4
C-1a(5)	Wastes Generated from EDS Treatment Operations and Support Activities	C-1-5
C-1b	Wastes in Tanks	C-1-7
C-1c	Waste Piles	C-1-7
C-1d	Landfilled Wastes	C-1-7
C-1e	Wastes in Incinerators, Boilers, and Industrial Furnaces	C-1-7
C-1f	Wastes to Be Land Treated	C-1-7
C-1g	Wastes in Miscellaneous Treatment Units	C-1-7
C-2	WASTE ANALYSIS PLAN	C-2-1
C-2a	Parameters and Rationale	C-2-1
C-2b	Test Methods	C-2-1
C-2c	Sampling Methods	C-2-2
C-2d	Laboratory QA/QC	C-2-2
C-2e	Frequency of Analyses	C-2-2
C-2f	Additional Requirements for Wastes Generated Offsite	C-2-3
C-2g	Additional Requirements for Ignitable, Reactive, or Incompatible Wastes	C-2-3
C-2h	Additional Requirements Pertaining to Incinerator, Boiler, and Industrial Furnace Facilities	C-2-4
C-2i	Additional Requirements Pertaining to Containment Buildings	C-2-4
C-3	WASTE ANALYSIS REQUIREMENTS PERTAINING TO LAND DISPOSAL RESTRICTIONS	C-3-1
C-3a	Waste Analysis	C-3-1
C-3a(1)	Spent Solvent and Dioxin Wastes	C-3-2
C-3a(2)	Listed Wastes	C-3-2
C-3a(3)	Characteristic Wastes	C-3-2
C-3a(4)	Radioactive Mixed Waste	C-3-3

TABLE OF CONTENTS (Continued)

Section	Title	Page
C-3a(5)	Leachates	C-3-3
C-3a(6)	Lab Packs	C-3-3
C-3a(7)	Contaminated Debris	C-3-3
C-3a(8)	Waste Mixtures and Wastes with Overlapping Requirements	C-3-4
C-3a(9)	Dilution and Aggregation of Wastes	C-3-4
C-3b	Notification, Certification, and Recordkeeping Requirements	C-3-4
C-3b(1)	Retention of Generator Notices and Certifications	C-3-4
C-3b(2)	Notification and Certification Requirements for Treatment Facilities	C-3-4
C-3b(3)	Notification and Certification Requirements for Land Disposal Facilities	C-3-5
C-3b(4)	Wastes Shipped to Subtitle C Facilities	C-3-5
C-3b(5)	Wastes Shipped to Subtitle D Facilities	C-3-5
C-3b(6)	Recyclable Materials	C-3-5
C-3b(7)	Recordkeeping	C-3-6
C-3c	Requirements Pertaining to the Storage of Restricted Wastes	C-3-6
C-3c(1)	Restricted Wastes Stored in Containers	C-3-6
C-3c(2)	Restricted Wastes Stored in Tanks	C-3-6
C-3c(3)	Storage of Liquid Polychlorinated Biphenyl (PCB) Wastes	C-3-6
C-3d	Exemptions, Extensions, and Variances to Land Disposal Restrictions	C-3-7
D	PROCESS DESCRIPTION	D-1
D.1	Overview	D-1
D.2	EDS Flow Process	D-1
D.2a	RSA-EDS Site Operations	D-2
D.2a(1)	Helium Leak Check	D-2
D.2a(2)	Unpack Recovered Munitions and Other Items	D-2
D.2a(3)	Place Item(s) in Fragment Suppression System (FSS) or Advanced Fragment Suppression System (AFSS) and Attach Explosive Shaped Charges	D-3
D.2a(4)	Access Item and Destroy Burster (If Present)	D-3
D.2a(5)	Treat Chemical Fill and Un-reacted Explosive Residues	D-3

TABLE OF CONTENTS (Continued)

Section	Title	Page
D.2a(6)	Sample Liquid Wastes (Neutralent)	D-3
D.2a(7)	Rinse with Water	D-4
D.2a(8)	Flush Vapors and Sample Headspace	D-4
D.2a(9)	Remove Solid Wastes	D-4
D.2a(10)	Rinse Containment Vessel with Water	D-4
D.2a(11)	Prepare for Next Item(s)	D-4
D.3	Waste Management	D-5
D.4	Utilities and Site Support Equipment at RSA-EDS Site	D-5
D-1	CONTAINERS	D-1-1
D-1a	Description of EDS Container	D-1-1
D-1a(1)	Physical Characteristics	D-1-2
D-1a(1)(a)	EDS	D-1-2
D-1a(1)(a)(i)	Trailer Subsystem	D-1-3
D-1a(1)(a)(ii)	Lift Assist Subsystem	D-1-4
D-1a(1)(a)(iii)	Containment Vessel Subsystem	D-1-4
D-1a(1)(a)(iv)	Clamp Hanger Subsystem	D-1-7
D-1a(1)(a)(v)	Hydraulic Nut Subsystem	D-1-7
D-1a(1)(a)(vi)	Rotary Agitation Subsystem	D-1-8
D-1a(1)(a)(vii)	Reagent Supply Subsystem	D-1-10
D-1a(1)(a)(viii)	Waste Transfer Subsystem	D-1-13
D-1a(1)(a)(ix)	Electrical Subsystem	D-1-14
D-1a(1)(a)(x)	Explosive Opening Subsystem	D-1-14
D-1a(1)(a)(xi)	Helium Supply and Leak Detection Subsystem	D-1-17
D-1a(2)	Operations and Maintenance	D-1-18
D-1a(2)(a)	Pre-Operations	D-1-18
D-1a(2)(b)	Operations	D-1-19
D-1a(3)	Management Practices	D-1-22
D-1a(4)	Operating Standards	D-1-23

TABLE OF CONTENTS (Continued)

Section	Title	Page
D-1b	Inspection and Closure	D-1-23
D-1b(1)	Inspection	D-1-23
D-1b(2)	Closure	D-1-23
D-1c	Monitoring, Analysis, Inspection, and Response	D-1-24
D-1d	Compliance with RCRA Organic Air Emissions	D-1-24
D-2	TANK SYSTEMS	D-2–D-10-1
D-3	SURFACE IMPOUNDMENTS	D-2–D-10-1
D-4	WASTE PILES	D-2–D-10-1
D-5	INCINERATORS, BOILERS, OR INDUSTRIAL FURNACES	D-2–D-10-1
D-6	LAND TREATMENT	D-2–D-10-1
D-7	LANDFILLS	D-2–D-10-1
D-8	DRIP PADS	D-2–D-10-1
D-9	PROCESS VENTS	D-2–D-10-2
D-10	MISCELLANEOUS TREATMENT UNITS	D-2–D-10-2
E	GROUNDWATER MONITORING SYSTEMS	E-1
F	PROCEDURES TO PREVENT HAZARDS	F-1-1
F-1	SECURITY	F-1-1
F-1a	Security Procedures and Equipment	F-1-1

TABLE OF CONTENTS (Continued)

Section	Title	Page
F-1a(1)	Twenty-Four Hour Surveillance System	F-1-1
F-1a(2)	Barrier and Means to Control Entry	F-1-2
F-1a(2)(a)	Barrier	F-1-2
F-1a(2)(b)	Means to Control Entry	F-1-2
F-1a(3)	Warning Signs	F-1-2
F-2	INSPECTION SCHEDULE	F-2-1
F-2a	General Inspection Requirements	F-2-1
F-2a(1)	Types of Problems	F-2-1
F-2a(2)	Frequency of Inspections	F-2-1
F-2a(3)	Schedule of Remedial Action	F-2-1
F-2a(4)	Inspection Log	F-2-1
F-2b	Specific Process Inspection Requirements	F-2-2
F-2b(1)	Container Inspection	F-2-2
F-2b(2)	Tank System Inspection	F-2-2
F-2b(3)	Waste Pile Inspection	F-2-2
F-2b(4)	Surface Impoundment Inspection	F-2-2
F-2b(5)	Incinerators Inspection	F-2-3
F-2b(6)	Landfill Inspection	F-2-3
F-2b(7)	Land Treatment Facility Inspection	F-2-3
F-2b(8)	Miscellaneous Unit Inspection	F-2-3
F-2b(9)	Boilers and Industrial Furnaces Inspections	F-2-3
F-2b(10)	Containment Building Inspection	F-2-3
F-2b(11)	Drip Pad Inspection	F-2-4
F-2b(12)	Inspection Procedures for Equipment Leaks, Applicability, and Waste Analysis	F-2-4
F-2b(13)	Inspection Procedures for Tanks, Surface Impoundments, and Containers	F-2-4
F-3	WAIVER OR DOCUMENTATION OF PREPAREDNESS AND PREVENTION REQUIREMENTS	F-3-1
F-3a	Equipment Requirements	F-3-1

TABLE OF CONTENTS (Continued)

Section	Title	Page
F-3a(1)	Internal Communications	F-3-1
F-3a(2)	External Communications	F-3-1
F-3a(3)	Emergency Equipment	F-3-1
F-3a(4)	Water and Fire Control	F-3-2
F-3b	Aisle Space Requirements	F-3-2
F-3c	Testing and Maintenance of Equipment	F-3-2
F-3d	Arrangements with Local Authorities	F-3-2
F-4	PREVENTIVE PROCEDURES, STRUCTURES, AND EQUIPMENT	F-4-1
F-4a	Unloading Operations	F-4-1
F-4b	Runoff	F-4-1
F-4c	Prevention of Water Supply Contamination	F-4-1
F-4d	Equipment and Power Failure	F-4-2
F-4e	Personnel Protection Procedures	F-4-3
F-4f	Prevent Release to Atmosphere	F-4-3
F-5	PREVENTION OF ACCIDENTAL IGNITION OR REACTION OF IGNITABLE, REACTIVE, OR INCOMPATIBLE WASTES	F-5-1
F-5a	Precautions to Prevent Accidental Ignition or Reaction of Ignitable or Reactive Wastes	F-5-1
F-5a(1)	Storage of Ignitable or Reactive Wastes	F-5-1
F-5a(2)	Preventive Operation Practices	F-5-1
F-5a(3)	EDS Design for Explosion Containment	F-5-2
F-5a(4)	EDS Waste Treatment and Vessel Integrity Documentation	F-5-3
F-5a(5)	Fire Protection	F-5-4
F-5b	General Precautions for Handling Ignitable or Reactive Wastes and Mixing of Incompatible Wastes	F-5-5
F-5c	Management of Ignitable or Reactive Wastes in Containers	F-5-5
F-5d	Management of Incompatible Wastes in Containers	F-5-5

TABLE OF CONTENTS (Continued)

Section	Title	Page
G	CONTINGENCY PLAN	G-1
G-1	GENERAL INFORMATION	G-1-1
G-2	EMERGENCY COORDINATOR	G-2-1
G-3	IMPLEMENTATION	G-3-1
G-4	EMERGENCY RESPONSE PROCEDURES	G-4-1
G-4a	Notification	G-4-1
G-4b	Identification of Hazardous Materials	G-4-2
G-4c	Hazard Assessment	G-4-2
G-4d	Notification Procedures	G-4-2
G-4e	Control Procedures	G-4-3
G-4f	Prevention of Recurrence or Spread of Fire, Explosion, or Release	G-4-5
G-4g	Storage and Treatment of Released Material	G-4-6
G-4h	Incompatible Waste	G-4-6
G-4i	Post-Emergency Equipment Maintenance	G-4-6
G-4j	Container Spills and Leakage	G-4-7
G-4k	Tank Spills and Leakage	G-4-7
G-4l	Surface Impoundment Spills and Leakage	G-4-7
G-5	EMERGENCY EQUIPMENT	G-5-1
G-5a	RSA-EDS Site Communication and Alarm Systems (Internal and External)	G-5-1
G-5b	Emergency Personnel Decontamination Station (PDS)	G-5-2
G-6	COORDINATION AGREEMENTS	G-6-1
G-7	EVACUATION PLAN	G-7-1
G-8	REQUIRED REPORTS	G-8-1

TABLE OF CONTENTS (Continued)

Section	Title	Page
H	PERSONNEL TRAINING	H-1
H-1	OUTLINE OF TRAINING PROGRAM	H-1-1
H-1a	Job Titles and Duties	H-1-2
H-1b	Training Content, Frequency, and Techniques	H-1-2
H-1b(1)	EDS Operators	H-1-2
H-1b(2)	RSA-EDS Site Visitors, Inspectors, and Non-routine Workers	H-1-3
H-1c	Training Coordinator/Manager	H-1-3
H-1d	Relevance of Training to Job Position	H-1-4
H-1e	Training for Emergency Response	H-1-5
H-2	TRAINING IMPLEMENTATION	H-2-1
I-1	CLOSURE PLAN	I-1-1
I-1a	Introduction	I-1-1
I-1b	General Description	I-1-1
I-1c	Closure Strategy	I-1-1
I-1c(1)	Temporary Closeout	I-1-2
I-1c(2)	RCRA Closure	I-1-2
I-1c(3)	Closeout and Closure Activities	I-1-2
I-1d	Closure Performance Standard	I-1-3
I-1e	Partial Closure and Final Closure Activities	I-1-7
I-1f	Maximum Waste Inventory	I-1-8
I-1g	Disposal or Decontamination of Equipment, Structures, and Soils	I-1-8
I-1g(1)	Closure of Containers	I-1-10
I-1g(2)	Closure of Tanks	I-1-10
I-1g(3)	Closure of Waste Piles	I-1-10
I-1g(4)	Closure of Surface Impoundments via Waste Removal	I-1-10
I-1g(5)	Closure of Incinerators, Boilers, and Industrial Furnaces	I-1-11
I-1g(6)	Closure of Land Treatment Facilities	I-1-11
I-1g(7)	Closure of Miscellaneous Units	I-1-11

TABLE OF CONTENTS (Continued)

Section	Title	Page
I-1h	Closure of Landfills	I-1-11
I-1i	Closure of Drip Pads	I-1-11
I-1j	Closure of Containment Buildings	I-1-11
I-1k	Ancillary Closure Activities	I-1-12
I-1k(1)	Decontamination Verification	I-1-12
I-1k(1)(a)	Sampling to Confirm Decontamination	I-1-12
I-1k(1)(b)	Structures or Equipment Monitoring	I-1-13
I-1l	Schedule for Closure	I-1-13
I-1m	Extension for Closure Time	I-1-13
I-1n	Certification of Closure	I-1-14
I-1o	Survey Plat	I-1-14
I-2	POST-CLOSURE PLAN	I-2–I-8-1
I-3	POST-CLOSURE NOTICES	I-2–I-8-1
I-4	CLOSURE COST ESTIMATE	I-2–I-8-1
I-5	FINANCIAL ASSURANCE MECHANISM FOR CLOSURE	I-2–I-8-1
I-6	POST-CLOSURE COST ESTIMATE	I-2–I-8-1
I-7	FINANCIAL ASSURANCE MECHANISM FOR POST-CLOSURE CARE	I-2–I-8-2
I-8	LIABILITY REQUIREMENTS	I-2–I-8-2
J	CORRECTIVE ACTION FOR SOLID WASTE MANAGEMENT UNITS	J-1
K	OTHER FEDERAL LAWS	K-1

TABLE OF CONTENTS (Continued)

Section	Title	Page
L	CERTIFICATION	L-1
M	TECHNICAL DATA PACKAGE	M-1

(This page intentionally left blank.)

LIST OF FIGURES

Figure	Title	Page
B-1-1	Location of RSA	B-1-6
B-1-2	Location of RSA-EDS Site	B-1-7
B-1-3	Example EDS Site Layout	B-1-8
B-2-1	Topographic Map of RSA	B-2-5
B-2-2	RSA-EDS Site Topographic Map	B-2-7
D-1	Simplified Block Flow Diagram for the EDS	D-6
D-1-1	Major Components of EDS Phase 2 Unit	D-1-25
D-1-2	EDS Phase 2 Containment Vessel Door	D-1-26
D-1-3	Containment Vessel Waste Transfer	D-1-27
D-1-4	Secondary Containment Pan Waste Transfer	D-1-28
D-1-5	Typical Munition FSS	D-1-29
D-1-6	6-Round 4.2-Inch Mortar Multiple Munition FSS	D-1-30
D-1-7	Advanced Fragment Suppression System	D-1-31
D-1-8	Example of an EDS Within an Environmental Enclosure	D-1-32
G-1-1	Example EDS Site Layout	G-1-2
G-7-1	RSA General Evacuation Map	G-7-3
I-1-1	Example RSA-EDS Site Layout	I-1-15
I-1-2	Example of an EDS Inside an Environmental Enclosure	I-1-16
I-1-3	General Decision Process for Clean Closure	I-1-17
I-1-4	Monitoring Process for Meeting Temporary Closeout and RCRA	I-1-18

(This page intentionally left blank.)

LIST OF TABLES

Table	Title	Page
C-1-1	Chemical Fills, Treatment Reagents, Treatment, and Vapor Screening Levels	C-1-8
C-1-2	RCRA Hazardous Waste Designation, Rationale, and Disposition	C-1-9
C-1-3	General Description of Chemical Fill and Potential Item Types	C-1-34
C-1-4	Physical and Chemical Characteristics of Explosives	C-1-35
C-2-1	Selected Parameters, Test Methods, and Rationale for EDS Process Wastes	C-2-5
C-2-2	Sampling Equipment, Methods, and Frequency	C-2-10
C-2-3	Sample Quantity Requirements	C-2-12
D-1	Chemical Fills, Treatment Reagents, and Treatment Levels	D-7
D-1-1	EDS Phase 2 Unit Physical Characteristics Summary	D-1-33
D-1-2	Fragment Suppression System Characteristics	D-1-36
D-1-3	Advanced Fragment Suppression System Characteristics Summary	D-1-37
F-2-1	Inspection Schedule for EDS Units at RSA-EDS Site	F-2-5
G-2-1	RSA Fire Stations	G-2-3
G-2-2	Key Organizations and Telephone Numbers	G-2-4
G-5-1	RSA-EDS Site Emergency Equipment	G-5-3
H-1-1	RSA-EDS Personnel Introductory Training Requirements	H-1-6
H-1-2	RSA-EDS Personnel Minimum Continuing Training Requirements	H-1-7
I-1-1	Acceptable Levels for Decontamination and Reuse	I-1-19
I-1-2	Headspace Monitoring Requirements	I-1-20
I-1-3	Summary of Confirmatory Sampling and Analysis Methods	I-1-21
I-1-4	Maximum Inventory of Wastes	I-1-22
I-1-5	Typical Temporary EDS Closeout Sequence	I-1-23
I-1-6	EDS RCRA Closure Sequences	I-1-24

(This page intentionally left blank.)

LIST OF ATTACHMENTS

Attachment	Title
ATTACHMENT B-1	PHOTOGRAPHS OF THE EDS
ATTACHMENT C-1	CHEMICAL AND PHYSICAL PROPERTIES FOR CHEMICAL FILLS, ENERGETIC COMPOUNDS, AND REAGENTS
ATTACHMENT C-2	EXAMPLE DIAGRAMS AND PHOTOGRAPHS OF POTENTIAL RECOVERED MUNITIONS AT RSA-EDS SITE
ATTACHMENT C-3	CHEMICAL AGENT TREATMENT LEVEL ANALYTICAL RESULTS AND WASTE PROFILES FOR EDS PROCESS WASTE
ATTACHMENT C-4	EDS TREATMENT CHEMISTRY
ATTACHMENT C-5	RCRA WASTE ANALYSIS QUALITY ASSURANCE/QUALITY CONTROL PLAN
ATTACHMENT D-1	RSA-EDS SITE SUPPORT EQUIPMENT
ATTACHMENT D-2	EDS PHASE 2 UNIT TRAILER CONTAINMENT PAN SECONDARY CONTAINMENT CALCULATIONS
ATTACHMENT D-3	SUBPARTS BB AND CC COMPLIANCE STRATEGY
ATTACHMENT D-4	EDS AIR FILTRATION SYSTEM CARBON FILTER PERFORMANCE
ATTACHMENT F-1	EXAMPLE INSPECTION LOG SHEETS
ATTACHMENT F-2	PROTECTIVE CLOTHING
ATTACHMENT F-3	RSA-EDS SITE-SPECIFIC MONITORING PLAN AND MONITORING DEVICES

LIST OF ATTACHMENTS (Continued)

Attachment	Title
ATTACHMENT H-1	RSA-EDS JOB TITLES AND DESCRIPTIONS
ATTACHMENT H-2	COURSE DESCRIPTIONS

SECTION B
FACILITY DESCRIPTION

B-1 GENERAL DESCRIPTION [40 CFR 270.14(b)(1) and 264.10; AAC 335-14-8-.02(5)(b)1 and 335-14-5-.02(1)]

The Redstone Arsenal-Explosive Destruction System (RSA-EDS) site will be located at Redstone Arsenal (RSA) in Madison County, Alabama. **Figure B-1-1**[1] shows the location of RSA. RSA is a contiguous U.S. Army installation located in Madison County of northcentral Alabama. It is bounded on the north by Interstate 565, on the east and northeast by the City of Huntsville, on the west and northwest by the City of Madison, and on the south by the Tennessee River. Over the past 10 years, the property (City of Madison) to the west of RSA has undergone substantial commercial and residential development. RSA is approximately 6 miles wide in an east to west direction and 10 miles long in a north to south direction. The installation occupies an approximate area of 57.4 square miles or 37,910 acres. Approximately 4,000 acres, a portion of Wheeler National Wildlife Refuge (WNWR), located within the installation boundary are used by the Army under a permit agreement with the U.S. Department of Interior's U.S. Fish and Wildlife Service. RSA began operation during the World War II era as an element of the Chemical Warfare Service. Construction of the Chemical Warfare Services structures, appurtenances, and other improvements on the land began in 1941. Shortly thereafter, the Ordnance Corps began development of ordnance facilities, which, through the years, evolved into what is now known as Redstone Arsenal.

Area Land Use

Living, shopping, and recreation areas are clustered in the northern portion of RSA; Weeden and Madkin Mountains separate these areas from the rest of the installation. The central portion of RSA is comprised mainly of the National Aeronautics and Space Administration's (NASA's) Marshall Space Flight Center (MSFC), various administration facilities, and research and development activities. The majority of the western and southern portions of the installation are devoted to test areas, training, and ammunition storage.

Range and test areas are those locations where live ammunition or ordnance is or was used. Training areas consist of classroom, academic, and outdoor training, "including non-live fire training in ordnance

[1] All figures are located at the end of this section.

and missile systems, land navigation, bivouacking, and other types of outdoor exercises." Together, these two land use categories comprise more than half (57.7 percent) of RSA. RSA's airfield, maintenance, industrial, supply/storage, and administration facilities represent about 17.7 percent of RSA. Open space, which generally indicates the presence of "ecologically sensitive areas, protected habitat, archaeological/cultural resource sites, borrow area, flood plains, wetlands, solid waste management units (SWMUs), or explosive safety arcs" and grazing areas represent about 16.1 percent of RSA. The MSFC facilities cover about 4.9 percent of RSA. Various housing, community, medical, and outdoor recreation facilities cover about 3.4 percent of RSA.

The majority of the open space at RSA is the approximately 4,085 acres of the WNWR, permitted for use by RSA. The refuge was established in 1938, encompassing a total of 34,500 acres on the Tennessee Valley Authority (TVA) Wheeler Reservoir on the Tennessee River, and is managed by the Department of Interior, U.S. Fish and Wildlife Service (USFWS). The portion of the refuge located on RSA encompasses portions of Wheeler Reservoir, Indian Creek, and Huntsville Spring Branch.

Beyond RSA, land use is dominated by (1) the city of Huntsville and its surrounding communities located to the north, northeast, and east of RSA and the City of Madison and its surrounding communities located to the north-northwest of RSA; (2) agricultural land (potentially including pasture/hay, row crops, small grains, fallow areas, and urban/recreational grasses) located west and northwest of RSA; (3) wetlands and surface water bodies associated primarily with the WNWR and the Tennessee River and located west, south, and northeast of RSA; and (4) a combination of forested uplands and agricultural land, including a variety of smaller communities located south of the Tennessee River and east (beyond the City of Huntsville) of RSA.

Additional information about RSA can be found in **Section B-1** of the Request for Modification of the Redstone Arsenal Alabama Hazardous Waste Management and Minimization Act (AHWMMA) Permit dated March 2015.

B-1a Recovered Chemical Materiel Directorate (RCMD)

RCMD is tasked with treating/destroying recovered munitions and other items that contain chemical agent or industrial chemical fills at RSA using the Explosive Destruction System (EDS). Up to two EDS units will be deployed at RSA.

EDS operations at RSA will support the overall goals of (1) investigating and remediating 17 suspect sites that require interim measures (IMs) and/or source removal actions and (2) conducting treatment/destruction activities in a safe, environmentally acceptable, and cost-effective manner.

This permit modification application addresses the treatment of recovered munitions or other items containing chemical agent or industrial chemical fills, which may or may not include explosive components, using EDS units.

B-1b Overview of the RSA-EDS Operations

The RSA-EDS site will be located within the 8200 series block of the RSA storage igloos area (see **Figure B-1-2**). **Figure B-1-3** depicts an example EDS site layout. Although the configuration may change based on specific site conditions, the associated equipment type and support trailers for an EDS operation remain the same.

B-1b(1) RSA-EDS Primary Process and Support Structures

Up to two EDS Phase 2 units will be operated at the RSA-EDS site. Each EDS unit will be housed inside an Environmental Enclosure. Photographs of an EDS unit are included in **Attachment B-1**. Detailed information about the EDS support equipment and layout of the major components of the EDS units is provided in **Section D-1**.

B-1b(2) EDS Process Overview

The EDS is a container-like transportable treatment unit designed to treat/destroy recovered munitions and other items that contain chemical agents or industrial chemicals. The purpose of treatment is to deactivate the explosive component (if present), reduce the toxicity of the chemical fill and explosive residues, and decontaminate item or munition casing fragments before shipment to an offsite permitted treatment, storage, and disposal facility (TSDF). A description of the EDS treatment process, as well as a process flow diagram, is provided in **Section D**.

B-1c Hazardous Waste Treatment Units to Be Permitted

The EDS is a container-like transportable treatment system (mounted on a trailer) comprised mainly of a Containment Vessel designed to destroy chemical-filled munitions with or without explosive components. Up to two EDS units (treatment in container [T04]) will be permitted.

Section D-1 of this permit modification application provides an engineering description of the design and operation of the EDS units to be permitted.

In addition to the EDS units to be permitted, there will be a less than 90-day hazardous waste storage area and satellite accumulation areas at the operating site. Satellite accumulation areas will be located within the fenceline at the Personnel Decontamination Stations (PDSs), Environmental Enclosures, and Mobile Analytical Platform (MAP).

In accordance with the generator standards of 40 CFR 262.34, AAC 335-14-3-.03(5)(a), and AAC 335-14-3-.03(5)(c), these waste management units will be operated and used for temporary storage of waste pending shipment to a permitted TSDF. Because these hazardous waste management units do not require a Resource Conservation and Recovery Act (RCRA) permit for operation, they are not discussed in further detail in this permit modification application.

SWMUs at RSA are described in Parts V and VI of the RSA Hazardous Waste Facility Permit.

B-1d Hazardous Wastes Managed

Information on the types of items that may be treated/destroyed is provided in **Section C** of this modification application.

Potential hazardous wastes generated during RSA-EDS site operations include but are not limited to the following:

- Neutralent and rinsates
- Spent decontamination solution and containment pan liquids
- Decontaminated metal parts and fragments

- Unexploded or untreated energetics or propellant material (unlikely to occur but could be generated)
- Spent carbon from drum filters and Environmental Enclosure Air Filtration System (AFS)
- Spent prefilters and high efficiency particulate air (HEPA) filters from the Environmental Enclosure AFS
- Used personal protective equipment (PPE)
- Miscellaneous solid and liquid wastes as a result of support, maintenance, and cleanup activities
- Laboratory and sampling liquid wastes
- Laboratory and sampling solid wastes
- Dunnage from unpack activities
- Empty overpacks
- Grayloc® Seal and O-rings.

Information on the wastes that will be managed at the RSA-EDS site is provided in **Section C-1**, Chemical and Physical Analyses.

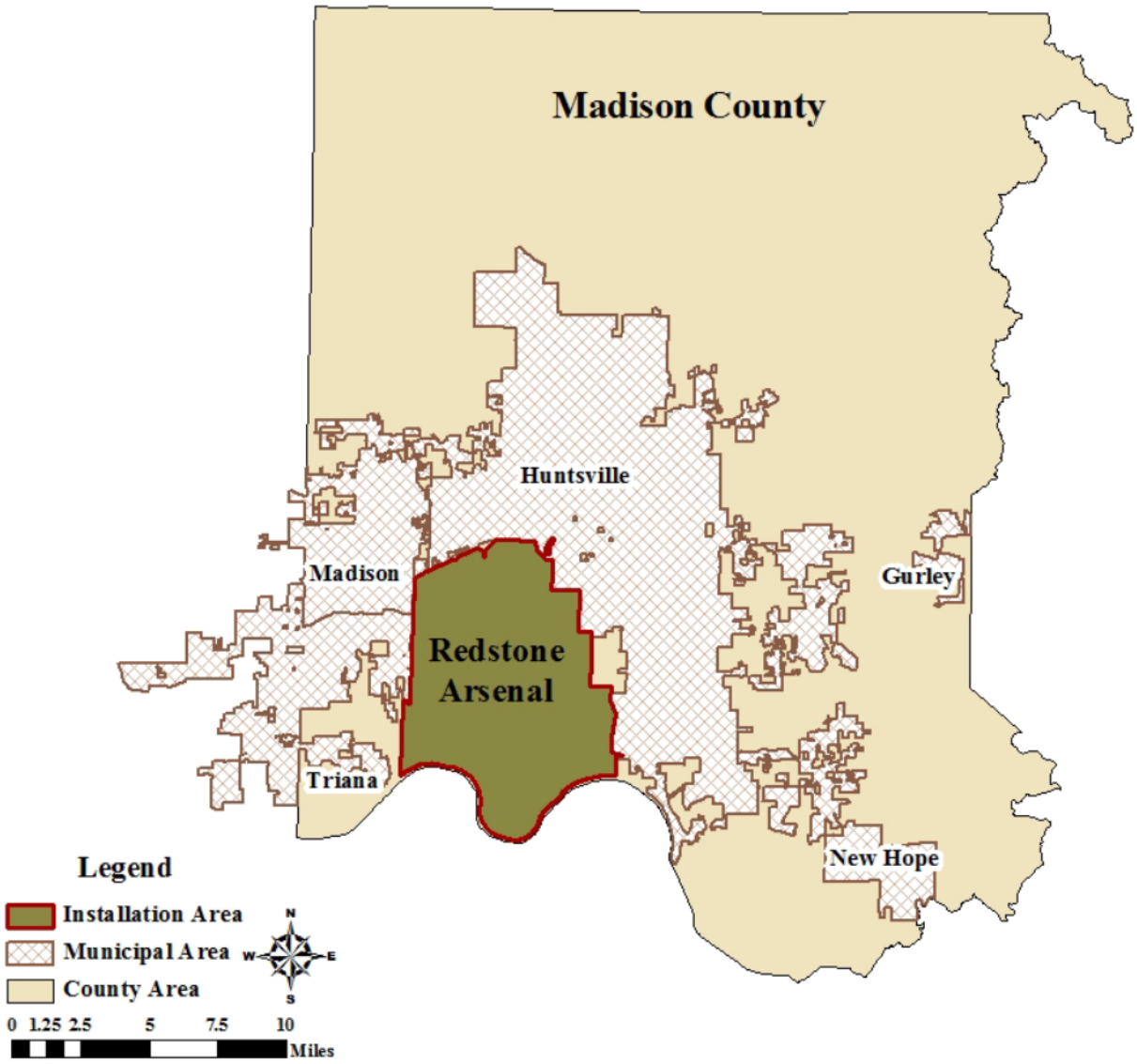

Figure B-1-1. Location of RSA

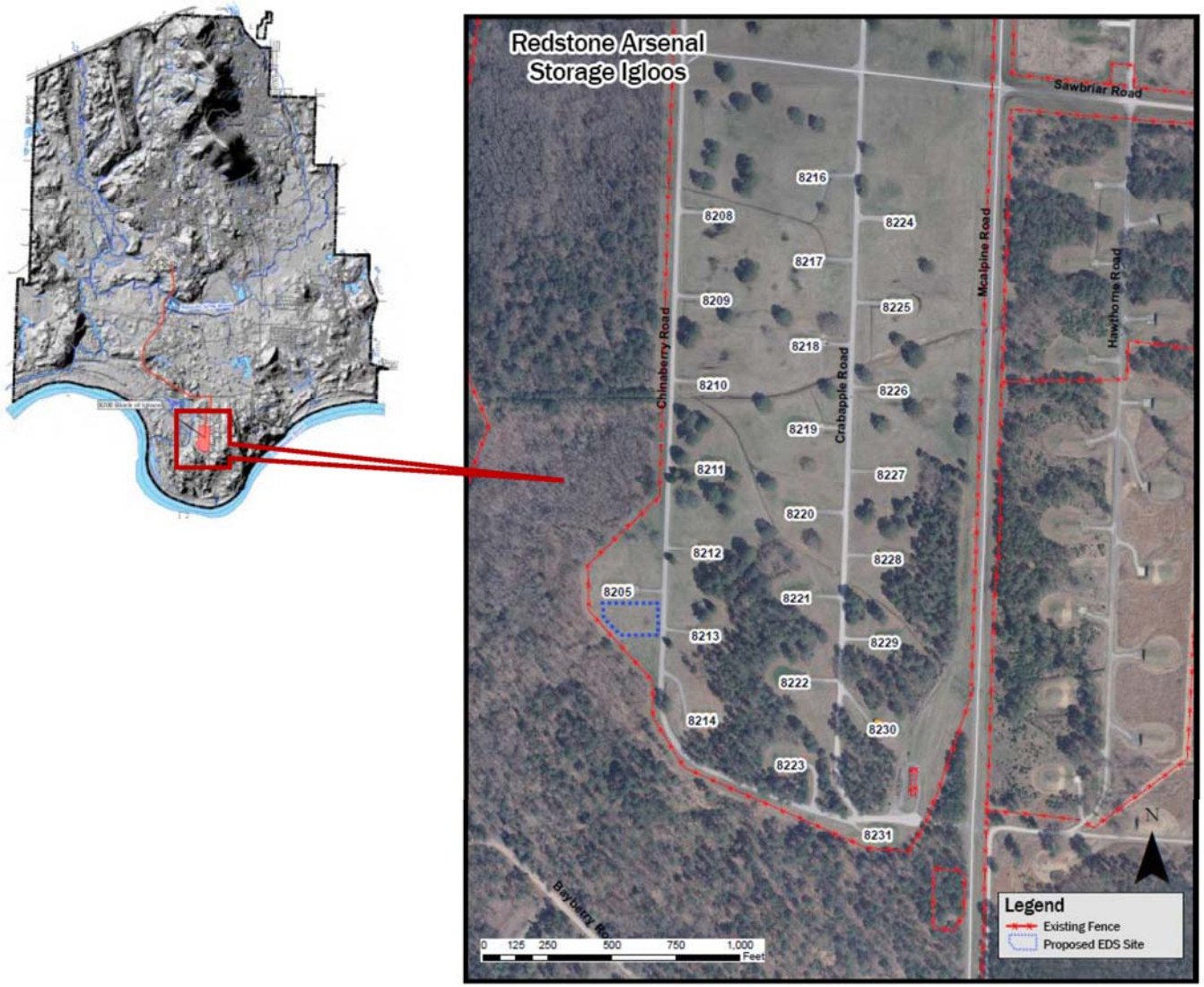

Figure B-1-2. Location of RSA-EDS Site

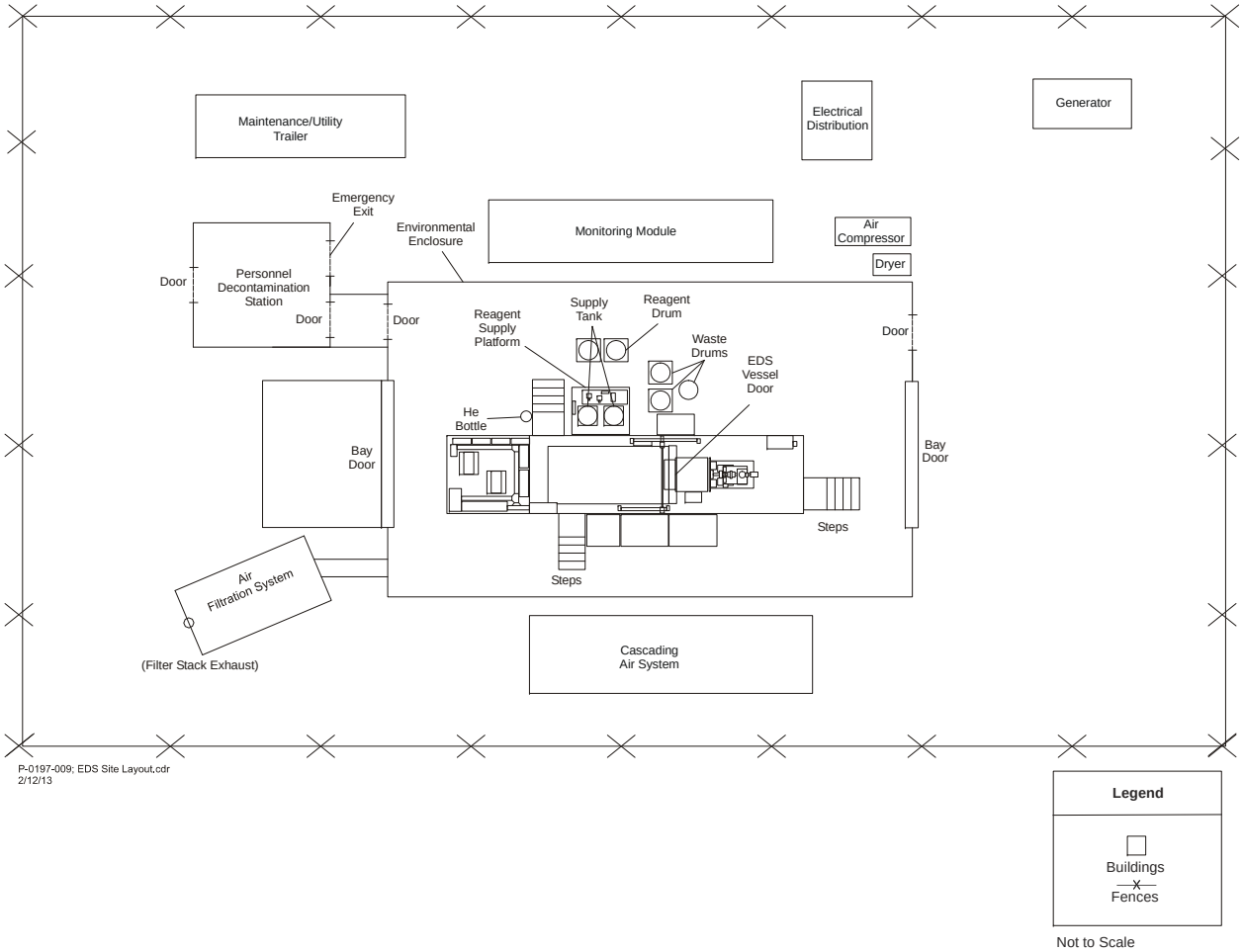

Figure B-1-3. Example EDS Site Layout[2]

[2] The figure depicts an example EDS layout with one EDS unit; however, final placement of equipment may change or number of EDS units may be increased to two.

B-2 TOPOGRAPHIC MAP

B-2a General Requirements [40 CFR 270.14(b)(19); AAC 335-14-8-.02(5)(b)19]

The topography of the RSA is comprised of low-lying wetland to mountainous areas. Low lying areas are mainly comprised of valleys and wetlands located in the southern portion of RSA while the mountainous areas are comprised of Madkin Mountain, Weeden Mountain, Ward Mountain, and Bradford and Hatton Mountains.

Topography and Typical Drainage

The elevations within RSA range from approximately 556 feet to 1,240 feet above mean sea level. RSA's general topographic features can be described as ranging from low-lying wetland to mountainous areas. Madkin Mountain, approximately 1,230 feet above sea level; Weeden Mountain, approximately 1,210 feet above sea level; Ward Mountain, approximately 900 feet above sea level; and Bradford and Hatton Mountains, approximately 800 to 850 feet above sea level, represent the highest elevations within the contiguous boundaries of RSA. Low lying areas are mainly comprised of valleys and wetlands located in the southern portion of RSA and range in elevation from 556 to 560 feet above mean sea level. Numerous surface water bodies exist in and around RSA. These surface water bodies range from wet weather springs to lakes.

The Tennessee River is the southern boundary of the installation. Major systems that flow through the installation include Indian Creek, Huntsville Spring Branch, and McDonald Creek, which empty into the Tennessee River. McDonald Creek drains the northeastern portion of the installation and empties into Huntsville Spring Branch. Huntsville Spring Branch flows from the city of Huntsville into the installation and runs in an easterly direction before emptying into the Wheeler Lake reservoir. Indian Creek flows into the northwestern portion of the installation and follows a southerly direction before converging with Huntsville Spring Branch within Wheeler Lake. Indian Creek empties into the Tennessee River at Wheeler Reservoir near the southwestern boundary of the installation.

Madison Quadrangle

Elevations within the Madison Quadrangle of RSA range from approximately 556 feet within the WNWR boundary to approximately 1,230 feet at the peak of Madkin Mountain. The area within this quadrangle

is densely populated in comparison to the other quadrangles and is occupied by both U.S. Army/RSA and the NASA/MSFC activities and personnel.

Surface waters located within this area meander throughout, but essentially flow in a north to south direction. The primary tributary is Indian Creek, which flows into Wheeler Lake and subsequently to the Tennessee River.

Triana Quadrangle

Elevations within the Triana Quadrangle (**Appendix B-1** of the Request for Modification of the Redstone Arsenal Alabama AHWMMA Permit), of RSA range from approximately 556 feet within the WNWR boundary to approximately 800 to 850 feet above sea level at the peaks of Bradford and Hatton Mountains. The area within this quadrangle is not densely populated in comparison to the other quadrangles that comprise RSA.

Surface waters located within this area meander throughout, but essentially flow in a north to south direction. The primary tributaries are Indian Creek and Huntsville Spring Branch, which flow to the Tennessee River. Five named surface water bodies (Swan Pond, Bradford Sinks, Lees Pond, Cribbs Pond, and Rock Pond) and several unnamed bodies are located within the RSA portion of the Triana Quandrangle.

Huntsville Quadrangle

RSA occupies less than 10 percent of the total area contained within the Huntsville Quadrangle. The elevations within the RSA area of this quadrangle range from approximately 556 to 600 feet above mean sea level.

Surface waters located within this area meander throughout, but essentially flow in a north to south direction. The primary tributary is Huntsville Spring Branch, which enters the arsenal on its eastern boundary from a northeasterly direction and flows through Wheeler Lake to the Tennessee River. A substantial amount of the property north and south of Martin Road is low lying and considered wetlands. This area is prone to flooding during heavy rainfall.

Farley Quadrangle

A very minimal part of RSA is located within the Farley Quadrangle. The elevations within the RSA area of this quadrangle range from approximately 560 to 620 feet above mean sea level.

Surface waters located within this area meander throughout, but essentially flow in a north to south direction. There are a number of wet-weather surface waters and storm drainage discharge points, which ultimately exit into the Tennessee River. Wetlands are also located in the southern portion (near the Tennessee River) of this area. There are no major tributaries within this area of RSA.

The RSA-EDS site will be located within the 8200 series block of the RSA storage igloos area (see **Figure B-1-2**). The EDS site is located inside the RSA legal boundaries. An example EDS site layout is shown in **Figure B-1-3**. The RSA-EDS site will not be located within the 100-year floodplain. **Appendix B-9** of the Request for Modification of the Redstone Arsenal AHWMMA Permit, March 2015, shows the 100-year floodplain boundary throughout RSA.

A topographic map of the RSA is provided as **Figure B-2-1**[1] and shows the surface water flow for the facility and surrounding land use. **Figure B-2-2** is a topographic map of the RSA-EDS site showing a distance of 1,000 feet around the EDS and includes a windrose showing prevailing windspeed and direction.

B-2b Additional Information Requirements [40 CFR 270.14(c), 264.95, and 264.97; AAC 335-14-8-.02(5)(c), 335-14-5-.06(6), and 335-14-5-.06(8)]

As there are no surface impoundments, hazardous waste landfills, or land treatment facilities that manage hazardous waste located at the RSA-EDS site, this requirement is not applicable. Groundwater monitoring at RSA is discussed in Part VII and SWMUs are discussed in Parts V and VI of the RSA Hazardous Waste Facility Permit.

[1] All figures are located at the end of this section.

(This page intentionally left blank.)

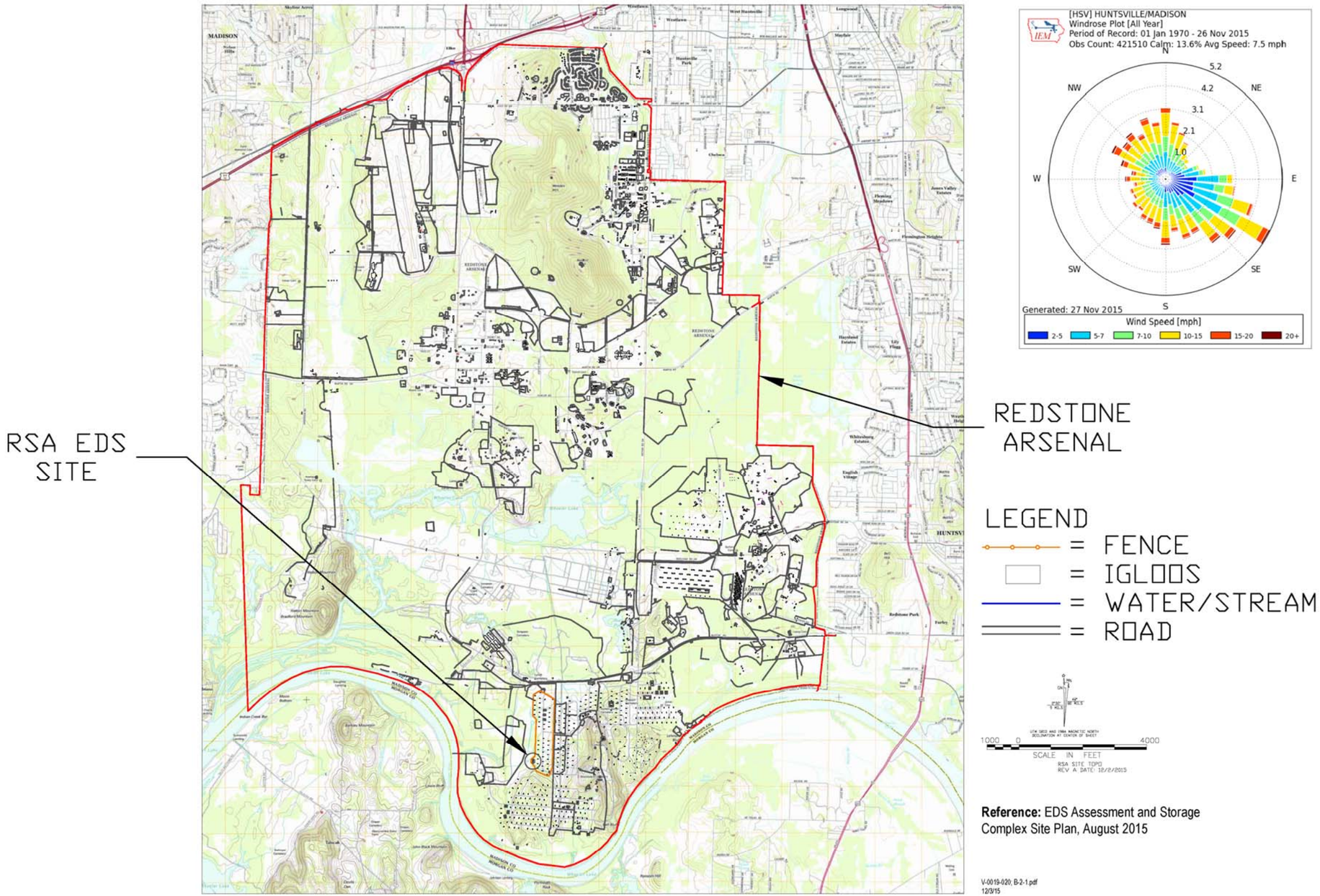

1 Figure B-2-1. Topographic Map of RSA

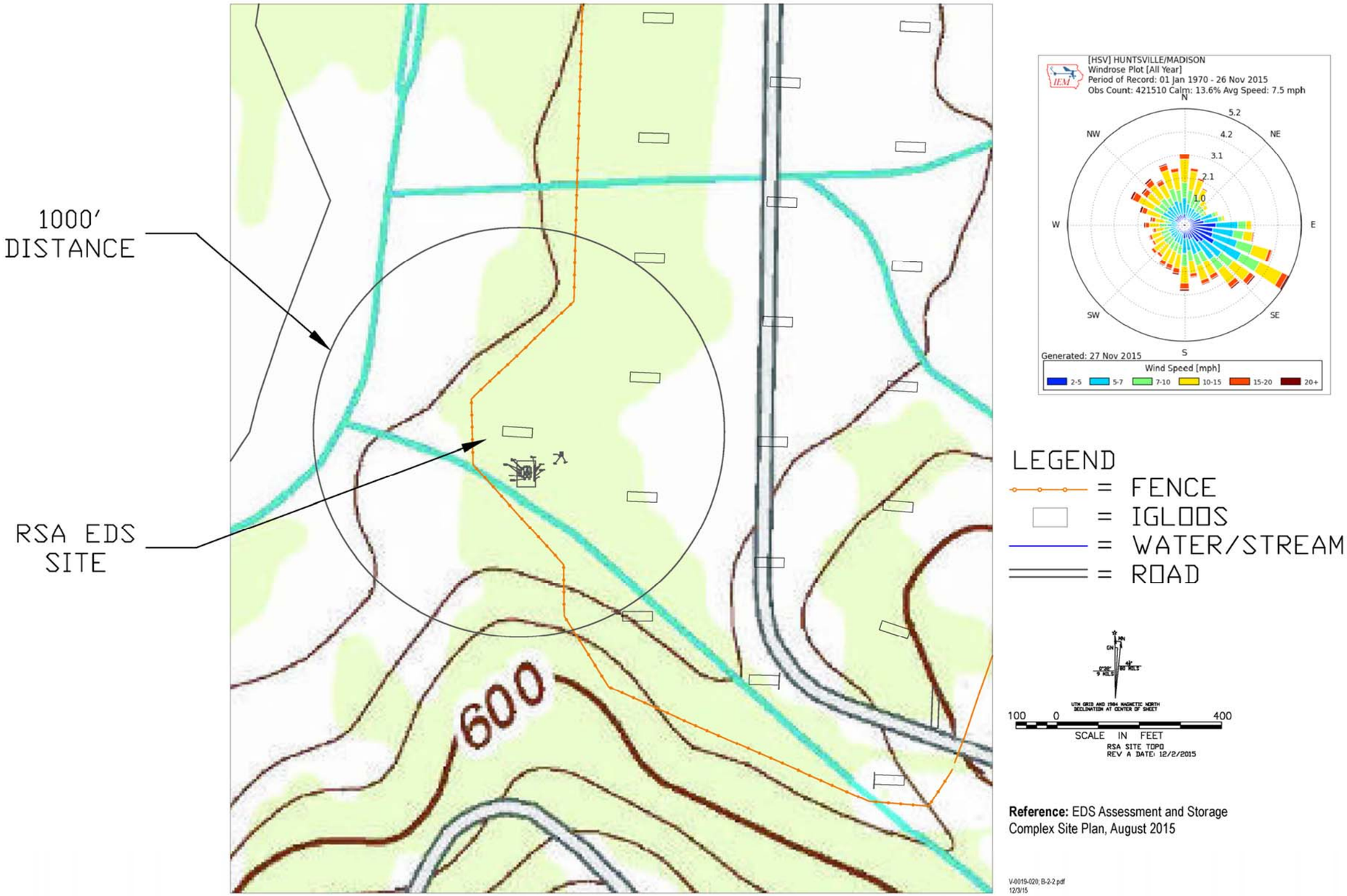

1 Figure B-2-2. RSA-EDS Site Topographic Map

B-3 LOCATION INFORMATION

B-3a Seismic Standard [40 CFR 270.14(b)(11)(i) and (ii), 264.18(a), and Appendix VI to Part 264]

The RSA-EDS site at RSA (located in Madison County, Alabama) is not located in the political jurisdictions listed in 40 CFR Part 264 Appendix VI. Therefore, the requirements of this section are not applicable.

B-3b Floodplain Standards [40 CFR 270.14(b)(11)(iii) and 264.18(b); AAC 335-14-8-.02(5)(b)11(iii) and 335-14-5-.02(9)(b)]

As indicated in the RSA 100-year floodplain boundary map (**Appendix B-9** of the Request for Modification of the Redstone Arsenal AHWMMA Permit, March 2015), the RSA-EDS site will not be located within the 100-year floodplain.

(This page intentionally left blank.)

B-4 TRAFFIC INFORMATION [40 CFR 270.14(b)(10); AAC 335-14-8-.02(5)(b)10]

This subsection describes the general traffic patterns and roads that exist throughout RSA, plus provides a description on how recovered munitions or other items will be transported to the EDS for treatment.

The primary roads serving the Arsenal are laid out in a grid pattern from north to south and east to west. Rideout Road, Toftoy Thruway, and Patton Road run north to south and are located at approximately one-mile intervals. The primary east to west roads are Goss Road, Martin Road, and Redstone Road. These roads are approximately three miles apart. This road system configuration provides reasonable access to and from the various activities throughout the Arsenal. All major roads within the Arsenal have all-weather surfaces that are continually maintained in serviceable condition. In addition to the primary roads, numerous secondary and tertiary roads are located throughout the Arsenal. All primary roads are surfaced with asphaltic concrete. The majority of the secondary roads have bitumen plant-mix pavement or asphalt surface treatment. The tertiary roads are generally surfaced with gravel and are located in lightly traveled areas such as the test areas. Approximately 162 miles of the facility roadways are unpaved. The remaining roads within the facility, approximately 132 miles, are both treated and untreated. All roads, with the exception of some tertiary roads, are capable of bearing loads up to 50,000 pounds per axle. All roads used for ingress and egress from the RSA Hazardous Waste Storage Area (HWSA) are capable of bearing loads up to 50,000 pounds per axle. At present, none of the roads on the facility are public highways. Access to the facility is controlled via gate entry and is not accessible to the public and is limited to permitted vehicles.

The traffic on the access roads to the RSA-EDS site will be minimal and site access will be controlled by a gated entrance. Personal vehicles will be parked outside site fence lines, and therefore, will not affect traffic within the operational site.

Recovered munitions or other items will be transported from the permitted storage igloos in the RSA HWSA to the EDS site using an approved vehicle (e.g., flatbed trailer, box truck, or other appropriate vehicle). The items will be contained in overpacks such as propellant charge cans or multiple round containers. The munitions will be transferred by hand or using waste handling equipment such as a forklift, hand dolly, or other moving device within the EDS site to an EDS unit for treatment. The igloo storage area is accessed via a second and controlled gate entry. The public will not have access to these roads and all transportation of munitions will occur in accordance with Army Regulation 190-11, including the use of escorts. Roads that will be used to transport hazardous wastes to and from the RSA-EDS site will be gravel-lined or paved and capable of highway loading.

(This page intentionally left blank.)

ATTACHMENT B-1

PHOTOGRAPHS OF THE EDS

(This page intentionally left blank.)

Figure Attachment B-1-1. EDS Phase 2

Figure Attachment B-1-2. EDS Phase 2 Back View – Inside Enclosure

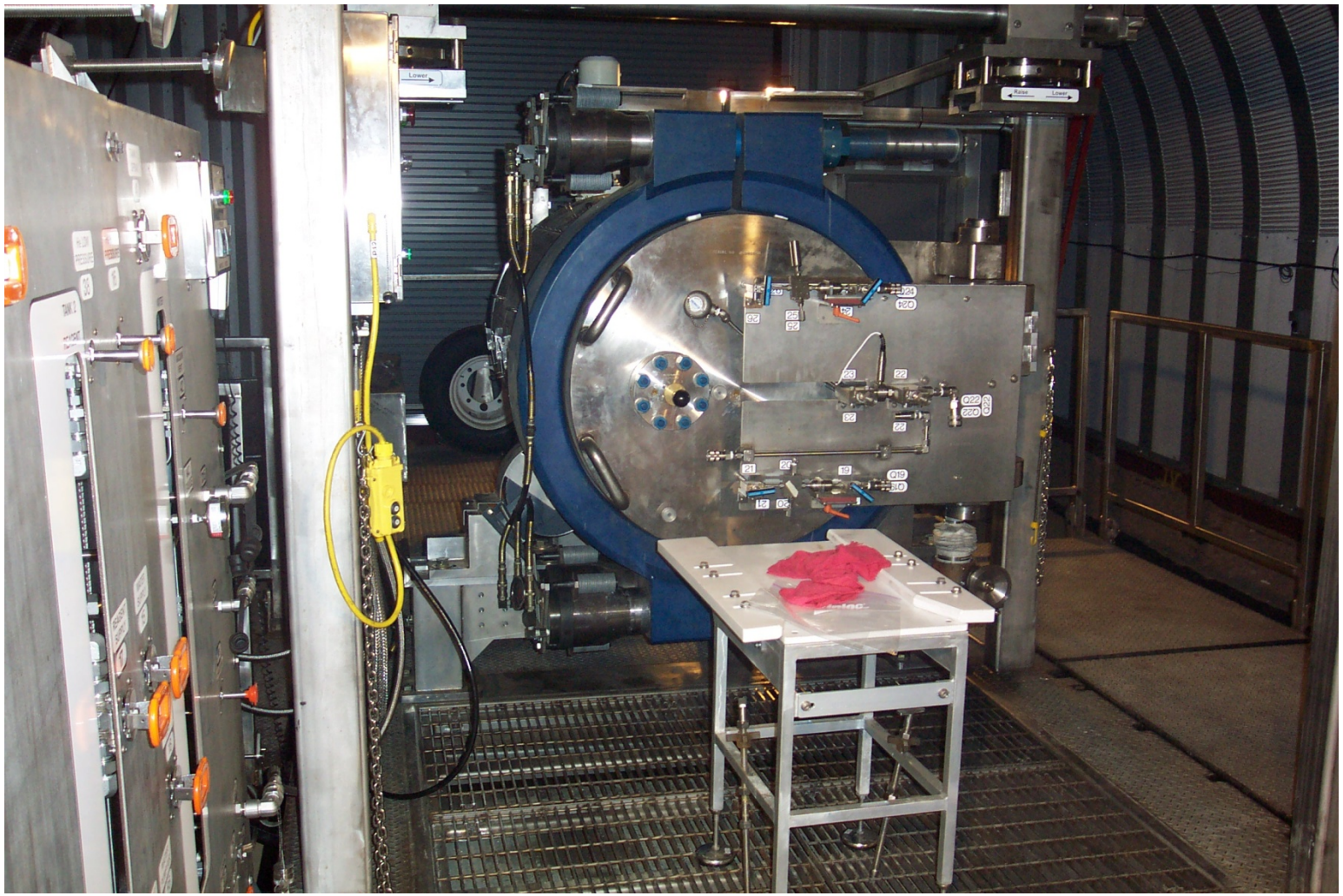

Figure Attachment B-1-3. EDS Phase 2 Containment Vessel – Front View

(This page intentionally left blank.)

SECTION C
WASTE CHARACTERISTICS

C-1 CHEMICAL AND PHYSICAL ANALYSES [40 CFR 270.14(b)(2), 264.13(a); AAC 335-14-8-.02(5)(b)2 and 335-14-5-.02(4)(a)]

Up to two Explosive Destruction System (EDS) units will be located at Redstone Arsenal (RSA) to process recovered munitions or other items that contain chemical agent or industrial chemical fills. The recovered munitions or other items may or may not include explosive components. Potential chemical fills to be processed in the EDS units are as follows:

- Sulfur mustard agent (HD/HS/HT)
- Nitrogen mustard (HN-3)
- Lewisite (L)
- Phosgene (CG)
- Carbon tetrachloride + chloroacetophenone + benzene (CNB)
- Chloroacetophenone + chloropicrin + chloroform (CNS)
- Arsenicals[1] [diphenylchloroarsine (DA) and/or phenyldichloroarsine (PD)
- HD + arsenicals (PD/DA)
- Sulfur trioxide + chlorsulfonic acid (FS smoke)
- Titanium tetrachloride (FM smoke).

Chemical and physical properties of the chemical fills that may be treated at the Redstone Arsenal Explosive Destruction System (RSA-EDS) site are provided in **Attachment C-1**.

Treatment in an EDS unit will begin by placing the items to be treated in the Containment Vessel. Once the items are enclosed in the Containment Vessel with shaped charges applied, the items are then detonated to access chemical fills and deactivate any explosive components. Liquid reagents are then added to treat the chemical fill and further deactivate explosives (if present). When treatment is complete, the liquid effluent is drained and solid material is removed manually from the Containment Vessel. The liquid and solid wastes are containerized and stored pending shipment to a permitted treatment, storage, and disposal facility (TSDF). The EDS unit is then prepared for the next set of items for processing. A

[1] Arsenicals may be a single chemical as listed or in any combination thereof.

detailed description of the EDS treatment process is provided in **Section D-1** of this permit modification application.

Table C-1-1[2] identifies the potential chemical fills, associated treatment reagent, treatment levels for liquid wastes, and chemical agent vapor screening level requirements for solid wastes generated from chemical agent process operations.

C-1a Containerized Wastes [40 CFR 270.15, 264.172, and 264.177; AAC 335-14-8-.02(6), 335-14-5-.09(3), and 335-14-5-.09(8)]

The EDS is a container-like transportable treatment system (mounted on a trailer) comprised mainly of a Containment Vessel designed to destroy chemical-filled munitions with or without explosive components. The wastes to be treated in an EDS unit are recovered munitions or other items containing chemical agent or industrial chemical fills that may or may not include explosive components. The EDS unit(s) will process recovered items of various sizes and configurations, whereby the total net explosive weight does not exceed 4.8 pounds in the EDS Phase 2 unit per batch.

Items will be brought from an RSA permitted storage area to an EDS unit prior to treatment. The items will be contained in overpacks such as propellant charge cans or multiple round containers. The overpack is considered the primary container for the item contained within, provides containment protection, and is compatible with the material contained within.

The EDS unit serves as the reaction vessel for the subsequent treatment of chemical fills and deactivation of energetics. The unit has been designed to be compatible with the chemical fills to be treated, the treatment reagents used during processing, as well as designed to contain the shock, munition fragments, and fill material during the munition opening process. **Table C-1-2** identifies the wastes to be processed and the potential resulting treatment residues and other process wastes, along with origin, Environmental Protection Agency (EPA) waste code number, basis for hazardous waste designation, and disposition. **Table C-1-3** presents potential fill material and associated munition or item type(s) that could be processed in an EDS unit at the RSA site. **Attachment C-3** contains EDS waste characterization data and waste profiles from recent EDS operations.

[2] All tables are located at the end of this section.

C-1a(1) Chemical Fills

Chemical and physical characteristic information on the potential chemical agent or industrial chemical fills to be treated are presented in **Attachment C-1**. Toxicity characteristic organics are associated with some of the chemical agents and toxicity characteristic metals may be present in some chemical fills due to leaching of metals from munition casings or as contaminants. Potential waste codes associated with these constituents are detailed in **Table C-1-2**.

C-1a(2) Energetics

Energetic components of a munition are comprised of fuzes, bursters, ignition cartridges, and propellant that contain explosives and other components. All energetic wastes (fuzes, bursters, ignition cartridges, and propellant) are classified as reactive hazardous wastes. The energetic wastes are explosive, or they contain Class 1.1 explosives. Examples of explosives (found in bursters and supplementary charges) are tetryl and tetrytol, both Class 1.1 explosives (49 CFR 173.53). Tetrytol contains tetryl and trinitrotoluene (TNT).

Fuzes are composed of boosters, detonators, and other components. These components are classified as reactive hazardous wastes either because they are explosive or contain Class 1.1 explosives. They are also classified as a characteristic waste because they may contain metals such as lead from lead azide and barium from barium nitrate; and some propellant in 105mm munitions may contain dinitrotoluene. **Table C-1-4** presents physical and chemical characteristics of explosives that may be treated at the RSA-EDS site.

C-1a(3) Characterization Prior to Treatment

Prior to treatment in an EDS unit, items will have been characterized by the U.S. Army Materiel Assessment Review Board (MARB). Chemical fill, energetic presence, and potential stability/condition will have been characterized using non-intrusive means that include historical documentation, physical appearance, X-rays, and portable isotopic neutron spectroscopy (PINS). Thus, at the time of treatment/destruction, sufficient information will be known about an item to treat/destroy it in the EDS. No further characterization is necessary to conduct treatment.

C-1a(4) Treatment Effectiveness

The primary objective of "treatment" is to convert the chemical fill to less toxic products to minimize health and safety hazards associated with the handling and transportation of chemical materiel destined for further treatment and ultimate disposal. All liquid wastes generated from the EDS treatment porcess will be subsequently shipped to a permitted TSDF for further treatment.

The product of treatment is termed "neutralent" and the term "treatment reagent" is applied to the treatment reagent liquids that react with the chemical-fill for detoxification. A treatment reagent reacts with a chemical agent or industrial chemical to convert the chemical fill to less toxic products that are not classified as chemical warfare materiel (CWM). However, these products may still present certain hazards to personnel or the environment.

Laboratory studies were conducted to develop treatment chemistry with the objectives to eliminate/minimize chemical agent characteristics and minimize any health hazards associated with handling and transportation for further waste treatment or disposal. Treatment reagents were evaluated and selected based on effectiveness at moderate temperatures, equipment compatibility, and safety. **Attachment C-4** provides information on the treatment chemistry.

Treatment effectiveness of any energetic components will be determined by visual observation for unexploded components. Although unlikely, any observed unexploded components will be removed, placed in appropriate container(s), and transferred to explosive ordnance disposal (EOD) personnel for disposition. For the liquid neutralent and rinsewaters, treatment effectiveness will be determined by chemical analysis to the treatment levels identified in **Table C-1-1**. When treating chemical agent fills, neutralent and rinsate wastes must meet established treatment levels shown in **Table C-1-1.**

Data results from full-scale tests and previous operations indicate that a treatment level for mustard agent of less than or equal to 50 milligrams per liter (mg/L) is reached after treatment using monoethanolamine (MEA) reagent. Dermal toxicity testing was conducted in accordance with Department of Transportation (DOT) requirements (49 CFR 173) in 1996 and 1997 using MEA-based chemical agent neutralent at a concentration of 50 mg/L (50 parts per million [ppm]). The purpose of the dermal toxicity testing was to demonstrate that agent characteristics were neutralized; demonstrate process chemistry effectiveness; and determine proper DOT classification for transportation purposes.

At a 50 mg/L level, the dermal toxicity test results showed that a Package Group III (least restrictive packaging) was met; that agent characteristics were eliminated in MEA-based chemical agent neutralent and that the predominant hazard is corrosivity. The detection of chemical agent in a solution designed to destroy the agent is difficult as the neutralent matrix is reactive and interferes with spike sample recovery. At a 50 mg/L (50 ppm) level, the neutralent matrix is still reacting but the level can be detected by the detection instrumentation; thus, 50 ppm for mustard agent was selected as the adequate treatment level for measurement.

For CG operations, treatment effectiveness is determined by a pH measurement (paper method) above 7. There is no analytical method to show phosgene concentrations in a liquid matrix. The reaction of phosgene and sodium hydroxide (NaOH) is rapid. If the supply of NaOH is not sufficient, acidic byproducts will form. Therefore, pH measurement is used to ensure there is an excess amount of NaOH in the Containment Vessel and the reaction has gone to completion.

Recent EDS deployments to treat FM smoke and FS smoke have shown NaOH to be an appropriate reagent. Additionally, sodium permanganate ($NaMnO_4$) has been proven an appropriate reagent for lewisite and other arsenicals such as DA and PD and will also be used to treat mustard/arsenical mixtures. The propylene glycol/NaOH combination has shown to be an appropriate reagent for CNS and CNB.

When processing chemical agent fills, headspace monitoring will be used to screen solid wastes to ensure they meet the required screening level identified for each chemical agent (see **Table C-1-1**) before the wastes can be shipped to a permitted TSDF for further management.

C-1a(5) Wastes Generated from EDS Treatment Operations and Support Activities

Wastes generated from EDS treatment operations and support activities will include, but are not limited to, the following:

- Neutralent and rinsates[3]
- Spent decontamination solution and containment pan liquids[3]

[3] The EDS Waste Transfer Subsystem, a component of an EDS unit, is used to drain liquid wastes (neutralent and rinsates) and vent vapors from the Containment Vessel as well as drain/pump out liquids from the EDS trailer secondary containment pan and the reagent supply secondary containment pan to liquid waste containers. Four liquid waste containers are used in waste transfer activities during normal operations as described in **Section D** of this permit modification.

- Decontaminated metal parts and fragments
- Unexploded or untreated energetics or propellant material (unlikely to occur but could be generated)
- Spent carbon from drum filters and Environmental Enclosure Air Filtration System (AFS)
- Spent prefilters and high efficiency particulate air (HEPA) filters from the Environmental Enclosure AFS
- Used personal protective equipment (PPE)
- Miscellaneous solid and liquid wastes as a result of support, maintenance, and cleanup activities
- Laboratory and sampling solid wastes
- Laboratory and sampling liquid wastes
- Dunnage from unpack activities
- Empty overpacks
- Grayloc® Seal and O-rings.

These wastes will be stored in United Nations (UN)-rated containers compatible with the wastes contained as determined by references such as DOT requirements, container compatibility charts provided by container manufacturers, and information presented in 40 CFR 264 Appendix V regarding incompatible materials. The wastes will be stored in a less than 90-day hazardous waste storage area at the RSA-EDS site, pending shipment to a permitted TSDF for further treatment and/or ultimate disposal.

Attachment C-2 contains general data, diagrams, and photograph examples of the types of recovered munitions or items that may be processed at the RSA-EDS site.

C-1b Wastes in Tanks [40 CFR 264.190; AAC 335-14-5-.10(1)]

There will be no hazardous waste treatment or storage tanks located at the RSA-EDS site. Therefore, the requirements of this section are not applicable.

C-1c Waste Piles [40 CFR 264.250; AAC 335-14-5-.12(1)]

The hazardous waste management units addressed in this permit modification application are not waste piles. Therefore, the requirements for wastes in piles are not applicable.

C-1d Landfilled Wastes [40 CFR 264.300; AAC 335-14-5-.14(1)]

The hazardous waste management units addressed in this permit modification application are not landfills. Therefore, the requirements for landfilled wastes are not applicable.

C-1e Wastes in Incinerators, Boilers, and Industrial Furnaces [40 CFR 264.344; AAC 335-14-5-.15(5)]

The hazardous waste management units addressed in this permit modification application are not incinerators, boilers, or industrial furnaces. Therefore, the requirements of this section are not applicable.

C-1f Wastes to Be Land Treated [40 CFR 270.20, 264.272(a), and 264.272(c); AAC 335-14-8-.02(11), 335-14-5-.13(3)(a), and 335-14-5-.13(3)(c)]

The hazardous waste management units addressed in this permit modification application are not land treatment units. Therefore, the requirements of this section are not applicable.

C-1g Wastes in Miscellaneous Treatment Units [40 CFR 270.23, 40 CFR 261, Appendix VIII to Part 261, and 264.601; AAC 335-14-8-.02(14), 335-14-2, 335-14-2 Appendix VIII, and 335-14-5-.24(2)]

The hazardous waste management units addressed in this permit modification application are not miscellaneous treatment units; therefore, the requirements of this section are not applicable.

Table C-1-1. Chemical Fills, Treatment Reagents, Treatment, and Vapor Screening Levels

Chemical Fill	Treatment Reagent	Treatment Level[a]	Vapor Screening Level[b] (VSL)
Sulfur Mustards (HD/HS/HT)[c]	90 vol.% MEA	≤ 50 mg/L mustard agent	< 0.003 mg/m^3
Nitrogen Mustard (HN-3)	90 vol.% MEA	≤ 50 mg/L mustard agent	< 0.003 mg/m^3
Lewisite (L)	20 wt.% $NaMnO_4$	≤ 50 mg/L lewisite	< 0.003 mg/m^3
Phosgene (CG)	20 wt.% NaOH	pH > 7	N/A
Carbon tetrachloride + chloroacetophenone + benzene (CNB)	20 wt.% NaOH and Propylene glycol	≤ 1,000 ppm (CN)	N/A
Chloroacetophenone + chloropicrin + chloroform (CNS)	20 wt.% NaOH and Propylene glycol	≤ 1,000 ppm (CN) ≤ 1,000 ppm (PS)	N/A
Arsenicals[d] [Diphenylchloroarsine (DA) Phenyldichloroarsine (PD)	20 wt.% $NaMnO_4$	≤ 50 mg/L (DA) ≤ 50 mg/L (PD)	N/A
Mustard HD Arsenicals (DA/PD)	20 wt.% $NaMnO_4$	≤ 50 mg/L mustard agent ≤ 50 mg/L (DA) ≤ 50 mg/L (PD)	<0.003 mg/m^3 mustard agent
Titanium tetrachloride (FM smoke)	20 wt.% NaOH	pH ≥ 10	N/A
Sulfur trioxide + chlorosulfonic acid (FS smoke)	20 wt.% NaOH	pH ≥ 10	N/A

Notes:

[a] When treating chemical agent fills, the neutralent and rinsewaters must meet the treatment level shown.
[b] VSL values are for solid wastes associated with chemical agent only.
[c] HD/HS/HT will be measured as H.
[d] Arsenicals may be a single chemical as listed or any combination thereof.

MEA = monoethanolamine
mg/L = milligram per liter
mg/m^3 = milligram per cubic meter
N/A = not applicable
$NaMnO_4$ = sodium permanganate
NaOH = sodium hydroxide
ppm = parts per million
vol.% = volume percent
wt.% = weight percent

Table C-1-2. RCRA Hazardous Waste Designation, Rationale, and Disposition

Waste Material[a]	Source	Waste Codes[b]	Basis for Designation	Disposition of Waste Material
Sulfur Mustard-Filled Items (HD/HS/HT)	Recovered items	D003, D004-D011, D022, D028, D029, D030, D034, D039, D040, D043	Recovered items may or may not contain energetic components (fuzes and bursters); which if present, are Class 1.1 explosives per 49 CFR 173.53, thus, are reactive (D003). Propellant, if present, may contain dinitrotoluene (D030). Several TC organics have been identified as degradation compounds of mustard agents. These analytes and corresponding regulatory levels are: • chloroform (D022) 6.0 ppm • 1,2-dichloroethane (D028) 0.5 ppm • 1,1-dichloroethylene (D029) 0.7 ppm • hexachloroethane (D034) 3.0 ppm • tetrachloroethylene (D039) 0.7 ppm • trichloroethylene (D040) 0.5 ppm • vinyl chloride (D043) 0.2 ppm The chemical agent may also contain TC metals since some munitions are constructed of specialty alloys containing heavy metals and the chemical agent over time may leach metals from munition casings. Also, explosive components may contain lead (D008) from lead azide or barium (D005) from barium nitrate. Mercury (D009) may also be present in the mustard as a contaminant. 2,4-dinitrotoluene (D030) may be present from energetics at or above regulation level (0.13 ppm).	Recovered items will be detonated in the EDS, accessing the chemical fill. The chemical fill then will be chemically treated. Resulting neutralent, rinsewater, spent decontamination solutions, and solid wastes will be placed in containers and stored in a less than 90-day hazardous waste storage area at the RSA-EDS site, pending shipment to a permitted TSDF.

Table C-1-2. RCRA Hazardous Waste Designation, Rationale, and Disposition (Continued)

Waste Material[a]	Source	Waste Codes[b]	Basis for Designation	Disposition of Waste Material
Nitrogen Mustard-Filled (HN-3) Items	Recovered items	D003, D004-D011	Recovered items may or may not contain energetic components (fuzes and bursters); which if present, are Class 1.1 explosives per 49 CFR 173.53, thus, are reactive (D003). The chemical agent may also contain TC metals since some munitions are constructed of specialty alloys containing heavy metals and the chemical agent over time may leach metals from munition casings. Also, explosive components may contain lead (D008) from lead azide.	Recovered items will be detonated in the EDS, accessing the chemical fill. The chemical fill then will be chemically treated. Resulting neutralent, rinsewater, spent decontamination solutions, and solid wastes will be placed in containers and stored in a less than 90 day hazardous waste storage area at the RSA-EDS site, pending shipment to a permitted TSDF.
Lewisite (L)-Filled Items	Recovered items	D003, D004-D011, D030	Recovered items may or may not contain explosive components (fuzes and/or bursters), which if present are Class 1.1 explosives per 49 CFR 173.53; thus are reactive (D003). The chemical agent may contain TC metals since some munitions are constructed of specialty alloys containing heavy metals and the chemical agent over time may leach metals from munition casings. Explosive components may contain lead (D008) from lead azide or barium (D005) from barium nitrate. Propellant, if present, may contain 2,4-dinitrotoluene (D030). Lewisite contains arsenic (D004).	Recovered items will be detonated in the EDS, accessing the chemical fill. The chemical fill then will be chemically treated. Resulting neutralent, rinsewater, spent decontamination solutions, and solid wastes will be placed in containers and stored in a less than 90-day container storage area at the RSA-EDS site, pending shipment to a permitted TSDF.

Table C-1-2. RCRA Hazardous Waste Designation, Rationale, and Disposition (Continued)

Waste Material[a]	Source	Waste Codes[b]	Basis for Designation	Disposition of Waste Material
Phosgene (CG)-Filled Items	Recovered items	D003, D008; P095	Recovered items may or may not contain explosive components (fuzes and/or bursters), which if present are Class 1.1 explosives per 49 CFR 173.53; thus are reactive (D003). Phosgene is a listed waste (P095). Also, explosive components may contain lead (D008) from lead azide.	Recovered items will be detonated in the EDS, accessing the chemical fill. The chemical fill then will be chemically treated. Resulting neutralent, rinsewater, spent decontamination solutions, and solid wastes will be placed in containers and stored in a less than 90-day hazardous waste storage area at the RSA-EDS site, pending shipment to a permitted TSDF.
CNB-Filled Items	Recovered items	D001, D003, D008, D018, D019	Recovered items may or may not contain explosive components (fuzes and/or bursters), which if present are Class 1.1 explosives per 49 CFR 173.53; thus are reactive (D003). CNB is ignitable (D001) and contains the TC organics benzene (D018) and carbon tetrachloride (D019). Also, explosive components may contain lead (D008) from lead azide.	Recovered items will be detonated in the EDS, accessing the chemical fill. The chemical fill then will be chemically treated. Resulting neutralent, rinsewater, spent decontamination solutions, and solid wastes will be placed in containers and stored in a less than 90-day hazardous waste storage area at the RSA-EDS site, pending shipment to a permitted TSDF.

Table C-1-2. RCRA Hazardous Waste Designation, Rationale, and Disposition (Continued)

Waste Material[a]	Source	Waste Codes[b]	Basis for Designation	Disposition of Waste Material
CNS-Filled Items	Recovered items	D003, D008, D022, D034	Recovered items may or may not contain explosive components (fuzes and/or bursters), which if present, are Class 1.1 explosives per 49 CFR 173.53; thus are reactive (D003). CNS contains the TC organics chloroform (D022) and hexachloroethane (D034). Also, explosive components may contain lead (D008) from lead azide.	Recovered items will be detonated in the EDS, accessing the chemical fill. The chemical fill then will be chemically treated. Resulting neutralent, rinsewater, spent decontamination solutions, and solid wastes will be placed in containers and stored in a less than 90-day hazardous waste storage area at the RSA-EDS site, pending shipment to a permitted TSDF.
Arsenical-Filled Items (DA/PD)	Recovered items	D003, D004-D011, P036	Recovered items may or may not contain explosive components (fuzes and/or bursters), which if present, are Class 1.1 explosives per 49 CFR 173.53; thus are reactive (D003). May contain TC metals since some munitions are constructed of specialty alloys containing heavy metals, and the chemical agent over time may leach metals from munition casings. Also, explosive components may contain lead (D008) from lead azide. DA and PD contain arsenic (D004). PD is a listed waste and carries the waste code of P036.	Recovered items will be detonated in the EDS, accessing the chemical fill. The chemical fill then will be chemically treated. Resulting neutralent, rinsewater, spent decontamination solutions, and solid wastes will be placed in containers and stored in a less than 90-day hazardous waste storage area at the RSA-EDS site, pending shipment to a permitted TSDF.

Table C-1-2. RCRA Hazardous Waste Designation, Rationale, and Disposition (Continued)

Waste Material[a]	Source	Waste Codes[b]	Basis for Designation	Disposition of Waste Material
Mustard Arsenicals HD/PD/DA (or any combination thereof) Items	Recovered items	D003, D004-D011, D022, D028, D029, D030, D034, D039, D040, D043, P036	Recovered items may or may not contain energetic components (fuzes and bursters); if present, energetics are Class 1.1 explosives per 49 CFR 173.53, thus, are reactive (D003). Several TC organics have been identified as degradation compounds of mustard agents. These analytes and corresponding regulatory levels are: • chloroform (D022) 6.0 ppm • 1,2-dichloroethane (D028) 0.5 ppm • 1,1-dichloroethylene (D029) 0.7 ppm • hexachloroethane (D034) 3.0 ppm • tetrachloroethylene (D039) 0.7 ppm • trichloroethylene (D040) 0.5 ppm • vinyl chloride (D043) 0.2 ppm PD and DA contain arsenic (D004); mustard agent may also contain TC metals since some munitions are constructed of specialty alloys containing heavy metals and the chemical agent over time may leach metals from munition casings. Explosive components may contain lead (D008) from lead azide. 2,4-dinitrotoluene (D030) may be present from energetics at or above regulation level (0.13 ppm). PD is a listed waste and carries the waste code P036.	Recovered items will be detonated in the EDS, accessing the chemical fill. The chemical fill then will be chemically treated. Resulting neutralent, rinsewater, spent decontamination solutions, and solid wastes will be placed in containers and stored in a less than 90-day hazardous waste storage area at the RSA-EDS site, pending shipment to a permitted TSDF.

Table C-1-2. RCRA Hazardous Waste Designation, Rationale, and Disposition (Continued)

Waste Material[a]	Source	Waste Codes[b]	Basis for Designation	Disposition of Waste Material
FS Smoke-Filled Items	Recovered items	D002, D003, D008	FS smoke (titanium tetrachloride) is corrosive (D002). Items may or may not contain explosive components (fuzes and/or bursters), which if present, are Class 1.1 explosives per 49 CFR 173.53 and thus are reactive (D003). A corrosion inhibitor containing lead (D008) may have been added to FS smoke.	Recovered items will be detonated in the EDS, accessing the chemical fill. The chemical fill then will be chemically treated. Resulting neutralent, rinsewater, spent decontamination solutions, and solid wastes will be placed in containers and stored in a less than 90-day hazardous waste storage area at the RSA-EDS site, pending shipment to a permitted TSDF.
FM Smoke-Filled Items	Recovered items	D002, D003, D008	Recovered items may contain explosive components (fuzes and/or bursters), which if present, are Class 1.1 explosives per 49 CFR 173.53; thus are reactive (D003). FM smoke (titanium tetrachloride) is corrosive (D002) and a reactive (D003) waste. A corrosion inhibitor containing lead (D008) may have been added to FM smoke.	Recovered items will be detonated in the EDS, accessing the chemical fill. The chemical fill then will be chemically treated. Resulting neutralent, rinsewater, spent decontamination solutions, and solid wastes will be placed in containers and stored in a less than 90-day hazardous waste storage area at the RSA-EDS site, pending shipment to a permitted TSDF.

Table C-1-2. RCRA Hazardous Waste Designation, Rationale, and Disposition (Continued)

Waste Material[a]	Source	Waste Codes[b]	Basis for Designation	Disposition of Waste Material
Sulfur Mustard Neutralents (HD/HS/HT) (Decomposition byproducts plus MEA and water); MEA/Rinsewater	Generated from detonation of mustard-filled recovered items and chemical neutralization	D001, D002, D004-D011, D018, D019, D022, D028, D029, D030, D034, D039, D040, D043	Liquid neutralent waste may be ignitable (D001) and/or corrosive (D002) with a pH ≥12.5; may contain heavy metals from the munition casings and container components, thus, may contain TC metals; may contain TC organics known to be degradation and decomposition products of mustard agent. Lead (D008) may be present from lead azide. Based on data from previous EDS mustard neutralent analyses, other TC organics that may be present in the neutralent waste are benzene (D018), carbon tetrachloride (D019), 1,1 dichloroethylene (D029), 2,4-dinitrotoluene (D030), hexachloroethane (D034), tetrachloroethylene (D039), trichloroethylene (D040), and vinyl chloride (D043).	Liquid waste will be placed in containers and stored in a less than 90-day hazardous waste storage area at the RSA-EDS site, pending shipment to a permitted TSDF. Neutralent will be shipped for incineration.
Nitrogen Mustard Neutralents (HN-3) (Decomposition byproducts plus MEA and water); MEA/Rinsewater	Generated from detonation of nitrogen mustard-filled recovered items and chemical neutralization	D001, D002, D004-D011	Liquid neutralent waste may be ignitable (D001) and/or corrosive (D002) with a pH ≥12.5; may contain heavy metals from the munition casings and container components, thus, may contain TC metals. Lead (D008) may be present from lead azide.	Liquid waste will be placed in containers and stored in a less than 90-day hazardous waste storage area at the RSA-EDS site, pending shipment to a permitted TSDF. Neutralent will be shipped for incineration.
Lewisite Neutralents (L decomposition byproducts plus $NaMnO_4$ and water); $NaMnO_4$ Rinsewater	Generated from detonation of recovered lewisite items and chemical neutralization	D001, D004-D011, D030	May contain TC metals as a result of leached metals from munition casings and lead (D008) from lead azide contained in explosive components or barium (D005) from barium nitrate. May also contain 2,4-dinitrotoluene (D030). Contains arsenic (D004). $NaMnO_4$ may result in an oxidizing waste (D001).	Liquid waste will be placed in containers and stored in a less than 90-day hazardous waste storage area at the RSA-EDS site, pending shipment to a permitted TSDF. Neutralent will be shipped for incineration.

Table C-1-2. RCRA Hazardous Waste Designation, Rationale, and Disposition (Continued)

Waste Material[a]	Source	Waste Codes[b]	Basis for Designation	Disposition of Waste Material
Phosgene (CG) Neutralents (CG decomposition byproducts plus NaOH and water); NaOH Rinsewater	Generated from detonation of recovered CG items and chemical neutralization	D002, P095	Meets the definition of corrosivity (D002). Phosgene is a listed waste (P095).[c]	Liquid waste will be placed in containers and stored in a less than 90-day hazardous waste storage area at the RSA-EDS site, pending shipment to a permitted TSDF. Neutralent will be shipped for incineration.
CNB Neutralents (CNB decomposition byproducts plus propylene glycol/NaOH and water); Propylene Glycol/NaOH Rinsewater	Generated from detonation of recovered CNB items and chemical neutralization	D018, D019	TC organics benzene (D018) and carbon tetrachloride (D019) may be present above the regulatory levels.	Liquid waste will be placed in containers and stored in a less than 90-day hazardous waste storage area at the RSA-EDS site, pending shipment to a permitted TSDF. Neutralent will be shipped for incineration.
CNS Neutralents (CNS decomposition byproducts plus propylene glycol/NaOH and water); Propylene Glycol/NaOH Rinsewater	Generated from detonation of recovered CNS items and chemical neutralization	D007, D008, D010, D018, D022, D027, D029, D039, D040, D043	Based on laboratory and field treatability studies, neutralent may contain benzene (D018), chloroform (D022), 1,4 dichlorobenzene (D027), 1, 1, dichloroethylene (D029), tetrachloroethylene (D039), trichloroethylene (D040), and vinyl chloride (D043). TC metals chromium (D007), lead (D008), and selenium (D010) may also be present.	Liquid waste will be placed in containers and stored in a less than 90-day hazardous waste storage area at the RSA-EDS site, pending shipment to a permitted TSDF. Neutralent will be shipped for incineration.
Arsenical Neutralents (PD/DA) and $NaMnO_4$ Solution	Generated from detonation of recovered DA and PD items and chemical neutralization	D001, D004-D011, P036	Neutralent may contain TC metals (fill contains arsenic). $NaMnO_4$ may result in an oxidizing waste (D001). PD is a listed waste and carries the waste code P036.[c]	Liquid waste will be placed in containers and stored in a less than 90-day hazardous waste storage area at the RSA-EDS site, pending shipment to a permitted TSDF. Neutralent will be shipped for incineration.

Table C-1-2. RCRA Hazardous Waste Designation, Rationale, and Disposition (Continued)

Waste Material[a]	Source	Waste Codes[b]	Basis for Designation	Disposition of Waste Material
Mustard Arsenical Neutralent (HD/PD/DA or any combination thereof) $NaMnO_4$ Solution	Generated from the detonation of recovered mustard/arsenical items and chemical neutralization	D001, D004-D011, D018, D019, D022, D028, D029, D030, D034, D039, D040, D043, P036	May contain TC metals (fill contains arsenic) and organics associated with mustard. $NaMnO_4$ may result in an oxidizing waste (D001). PD is a listed hazardous waste (P036).[c]	Liquid waste will be placed in containers and stored in a less than 90-day hazardous waste storage area at the RSA-EDS site, pending shipment to a permitted TSDF. Neutralent will be shipped for incineration.
FS Smoke Neutralent (FS Smoke byproducts plus NaOH)	Generated from detonation of recovered FS smoke-filled items and chemical neutralization	D002	Neutralent may have a pH >12.5 (D002).	Liquid waste will be placed in containers and stored in a less than 90-day hazardous waste storage area at the RSA-EDS site, pending shipment to a permitted TSDF. Neutralent will be shipped for incineration.
FM Smoke Neutralent (FM Smoke byproducts plus NaOH)	Generated from detonation of recovered FM smoke-filled items and chemical neutralization	D002, D032	Neutralent may have a pH >12.5 (D002). Hexachlorobenzene (D032) may also be present in neutralent.	Liquid waste will be placed in containers and stored in a less than 90-day hazardous waste storage area at the RSA-EDS site, pending shipment to a permitted TSDF. Neutralent will be shipped for incineration.
Sulfur Mustard (HD/HS/HT) Rinsewater (Water/trace amounts of MEA)	Generated from rinsing the EDS Containment Vessel following treatment	D004-D011, D018, D019, D022, D028, D029, D030, D034, D039, D040, D043	May contain TC organics and TC metals from residues in the EDS Containment Vessel following treatment.	Liquid waste will be placed in containers and stored in a less than 90-day hazardous waste storage area at the RSA-EDS site, pending shipment to a permitted TSDF.

Table C-1-2. RCRA Hazardous Waste Designation, Rationale, and Disposition (Continued)

Waste Material[a]	Source	Waste Codes[b]	Basis for Designation	Disposition of Waste Material
Nitrogen Mustard (HN-3) Rinsewater (Water/trace amount of MEA)	Generated from rinsing the EDS Containment Vessel following treatment	D004-D011	May contain TC metals from residues in the EDS Containment Vessel following treatment.	Liquid waste will be placed in containers and stored in a less than 90-day hazardous waste storage area at the RSA-EDS site, pending shipment to a permitted TSDF.
Lewisite (L) Rinsewater (Water/trace amounts of $NaMnO_4$)	Generated from rinsing the EDS Containment Vessel following treatment	D004-D011	May contain TC metals. Contains arsenic (D004).	Liquid waste will be placed in containers and stored in a less than 90-day hazardous waste storage area at the RSA-EDS site, pending shipment to a permitted TSDF.
CG Rinsewater (Water/trace amounts of NaOH)	Generated from rinsing the EDS Containment Vessel following treatment	D002, P095	Phosgene is a listed waste (P095).[c] Rinsewater may have a pH >12.5 (D002).	Liquid waste will be placed in containers and stored in a less than 90-day hazardous waste storage area at the RSA-EDS site, pending shipment to a permitted TSDF.
CNB Rinsewater (Water/trace amounts of propylene glycol/NaOH)	Generated from rinsing the EDS Containment Vessel following treatment	D018, D019	TC organics benzene (D018) and carbon tetrachloride (D019) may be present above the regulatory levels.	Liquid waste will be placed in containers and stored in a less than 90-day hazardous waste storage area at the RSA-EDS site, pending shipment to a permitted TSDF.

Table C-1-2. RCRA Hazardous Waste Designation, Rationale, and Disposition (Continued)

Waste Material[a]	Source	Waste Codes[b]	Basis for Designation	Disposition of Waste Material
CNS Rinsewater (Water/trace amounts of propylene glycol/NaOH)	Generated from rinsing the EDS Containment Vessel following treatment	D007, D008, D010, D018, D022, D027, D029, D039, D040, D043	May contain TC organics and TC metals.	Liquid waste will be placed in containers and stored in a less than 90-day hazardous waste storage area at the RSA-EDS site, pending shipment to a permitted TSDF.
Mustard Arsenical (HD/DA/PD) Rinsewater (Water/trace amounts of $NaMnO_4$)	Generated from rinsing the EDS Containment Vessel following treatment	D001, D004-D011, D018, D019, D022, D028, D034, D039, D040, D043, P036	May contain TC metals and organics associated with mustard. $NaMnO_4$ may create an oxidizing waste (D001). PD is a listed hazardous waste (P036).[c]	Liquid waste will be placed in containers and stored in a less than 90-day hazardous waste storage area at the RSA-EDS site, pending shipment to a permitted TSDF.
Arsenical (DA/PD) Rinsewater (Water/trace amounts of $NaMnO_4$ solution)	Generated from rinsing the EDS Containment Vessel following treatment	D001, D004-D011, P036	May still contain TC metals. PD is a listed hazardous waste (P036).[c] $NaMnO_4$ may create an oxidizing waste (D001).	Liquid waste will be placed in containers and stored in a less than 90-day hazardous waste storage area at the RSA-EDS site, pending shipment to a permitted TSDF.
FS Smoke Rinsewater (Water/trace amounts of NaOH)	Generated from rinsing the EDS Containment Vessel following treatment	N/A	Nonhazardous based on previous EDS FS smoke rinsewater analytical results and waste shipment.	Liquid waste will be placed in containers and stored in a less than 90-day hazardous waste storage area at the RSA-EDS site, pending shipment offsite.
FM Smoke Rinsewater (Water/trace amounts of NaOH)	Generated from rinsing the EDS Containment Vessel following treatment	N/A	Nonhazardous based on previous EDS FM smoke rinsewater analytical results and waste shipment.	Liquid waste will be placed in containers and stored in a less than 90-day hazardous waste storage area at the RSA-EDS site, pending shipment offsite.

Table C-1-2. RCRA Hazardous Waste Designation, Rationale, and Disposition (Continued)

Waste Material[a]	Source	Waste Codes[b]	Basis for Designation	Disposition of Waste Material
Decontamination Solutions Associated with Mustard Agents (HD/HS/HT) (Mostly water/trace amounts of bleach/trace amounts of MEA)	Generated from the decontamination of the EDS Containment Vessel and/or components with a bleach/water solution	D002, D004-D011, D018, D019, D022, D028, D029, D030, D034, D039, D040, D043	May contain TC organics and TC metals from residues in the EDS Containment Vessel following treatment. May be corrosive due to bleach.	Liquid waste will be placed in containers and stored in a less than 90-day hazardous waste storage area at the RSA-EDS site, pending shipment to a permitted TSDF.
Decontamination Solutions Associated with Nitrogen Mustard (HN-3) (Mostly water/trace amounts of bleach/trace amounts of MEA)	Generated from the decontamination of the EDS Containment Vessel and/or components with a bleach/water solution	D002, D004-D011	May contain TC metals from residues in the EDS Containment Vessel following treatment. May be corrosive due to bleach.	Liquid waste will be placed in containers and stored in a less than 90-day hazardous waste storage area at the RSA-EDS site, pending shipment to a permitted TSDF.
Decontamination Solutions Associated with Lewisite (Mostly water/trace amounts of $NaMnO_4$ and/or peroxide [HPO_2])	Generated from the decontamination of the EDS Containment Vessel and/or components	D001, D004-D011	May contain TC metals. Permanganate or peroxide may result in an oxidizing solution.	Liquid waste will be placed in containers and stored in a less than 90-day hazardous waste storage area at the RSA-EDS site, pending shipment to a permitted TSDF.
Decontamination Solutions Associated with CG (Mostly water/mild detergent plus trace amounts of NaOH)	Generated from the decontamination of the EDS Containment Vessel	P095	CG is a listed waste (P095).[c]	Liquid waste will be placed in containers and stored in a less than 90-day hazardous waste storage area at the RSA-EDS site, pending shipment to a permitted TSDF.

Table C-1-2. RCRA Hazardous Waste Designation, Rationale, and Disposition (Continued)

Waste Material[a]	Source	Waste Codes[b]	Basis for Designation	Disposition of Waste Material
Decontamination Solutions Associated with CNB (Mostly water/mild detergent plus trace amounts of propylene glycol/NaOH)	Generated from the decontamination of the EDS Containment Vessel	D018, D019	TC organics benzene (D018) and carbon tetrachloride (D019) may still be present above the regulatory levels.	Liquid waste will be placed in containers and stored in a less than 90-day hazardous waste storage area at the RSA-EDS site, pending shipment to a permitted TSDF.
Decontamination Solutions Associated with CNS (Mostly water/mild detergent plus trace amounts of propylene glycol/NaOH)	Generated from the decontamination of the EDS Containment Vessel	D007, D008, D010, D018, D022, D027, D029, D039, D040, D043	May contain TC organics and TC metals.	Liquid waste will be placed in containers and stored in a less than 90-day hazardous waste storage area at the RSA-EDS site, pending shipment to a permitted TSDF.
Decontamination Solutions Associated with Mustard/Arsenicals (HD/DA/PD) (Mostly water/mild detergent plus trace amounts of $NaMnO_4$)	Generated from the decontamination of the EDS Containment Vessel	D001, D004-D011, D018, D019, D022, D028, D034, D039, D040, D043, P036	May contain TC metals and organics associated with mustard. PD is a listed hazardous waste (P036).[c]	Liquid waste will be placed in containers and stored in a less than 90-day hazardous waste storage area at the RSA-EDS site, pending shipment to a permitted TSDF.
Decontamination Solutions Associated with Arsenicals (DA/PD) (Mostly water/mild detergent plus trace amounts of $NaMnO_4$)	Generated from the decontamination of the EDS Containment Vessel	D001, D004-D011; P036	May contain TC metals. PD is a listed waste (P036).[c]	Liquid waste will be placed in containers and stored in a less than 90-day hazardous waste storage area at the RSA-EDS site, pending shipment to a permitted TSDF.

Table C-1-2. RCRA Hazardous Waste Designation, Rationale, and Disposition (Continued)

Waste Material[a]	Source	Waste Codes[b]	Basis for Designation	Disposition of Waste Material
Decontamination Solutions Associated with FS Smoke (Mostly water/mild detergent plus trace amounts of NaOH)	Generated from the decontamination of the EDS Containment Vessel	N/A	Nonhazardous based on previous EDS FS smoke rinsewater analytical results and waste shipment.	Liquid waste will be placed in containers and stored in a less than 90-day hazardous waste storage area at the RSA-EDS site, pending shipment offsite.
Decontamination Solutions associated with FM Smoke (Mostly water/mild detergent plus trace amounts of NaOH)	Generated from the decontamination of the EDS Containment Vessel	N/A	Nonhazardous based on previous EDS FM smoke rinsewater analytical results and waste shipment.	Liquid waste will be placed in containers and stored in a less than 90-day hazardous waste storage area at the RSA-EDS site, pending shipment offsite.
Decontaminated Metal Parts and Fragments – Mustard Agents (HD/HS/HT)	Generated from treatment of recovered mustard-filled items in the EDS	D004-D011	Decontaminated metal parts and fragments are not hazardous waste. Munition casings, metal parts, and fragments are composed of metal alloys and may contain TC metals.	Will be placed in containers and stored in a less than 90-day hazardous waste storage area at the RSA-EDS site, pending shipment to a permitted TSDF.
Decontaminated Metal Parts and Fragments – Nitrogen Mustard (HN-3)	Generated from treatment of recovered nitrogen mustard-filled items in the EDS	D004-D011	Decontaminated metal parts and fragments are not hazardous waste. Munition casings, metal parts, and fragments are composed of metal alloys and may contain TC metals.	Will be placed in containers and stored in a less than 90-day hazardous waste storage area at the RSA-EDS site, pending shipment to a permitted TSDF.
Decontaminated Metal Parts and Fragments – Lewisite (L)	Generated from treatment of recovered L-filled items in the EDS	D004-D011	Munition casings, metal parts, and fragments are composed of metal alloys and may contain TC metals.	Will be placed in containers and stored in a less than 90-day hazardous waste storage area at the RSA-EDS site, pending shipment to a permitted TSDF.

Table C-1-2. RCRA Hazardous Waste Designation, Rationale, and Disposition (Continued)

Waste Material[a]	Source	Waste Codes[b]	Basis for Designation	Disposition of Waste Material
Decontaminated Metal Parts and Fragments – Phosgene (CG)	Generated from treatment of recovered CG-filled items in the EDS	D004-D011, P095	Will carry the listed waste code for phosgene (P095).[c] Munition casings, metal parts, and fragments are composed of metal alloys and may contain TC metals.	Will be placed in containers and stored in a less than 90-day hazardous waste storage area at the RSA-EDS site, pending shipment to a permitted TSDF.
Decontaminated Metal Parts and Fragments – CNB	Generated from treatment of recovered CNB-filled items in the EDS	D004-D011	Decontaminated metal parts and fragments are not hazardous waste. Munition casings, metal parts, and fragments are composed of metal alloys and may contain TC metals.	Will be placed in containers and stored in a less than 90-day hazardous waste storage area at the RSA-EDS site, pending shipment to a permitted TSDF.
Decontaminated Metal Parts and Fragments – CNS	Generated from treatment of recovered CNS-filled items in the EDS	D004-D011	Decontaminated metal parts and fragments are not hazardous waste. Munition casings, metal parts, and fragments are composed of metal alloys and may contain TC metals.	Will be placed in containers and stored in a less than 90-day hazardous waste storage area at the RSA-EDS site, pending shipment to a permitted TSDF.
Decontaminated Metal Parts and Fragments – Mustard/Arsenicals (DA/PD)	Generated from the treatment of recovered mustard/arsenical-filled items in the EDS	D004-D011; P036	PD is a listed hazardous waste (P036).[c] May contain TC metals.	Will be placed in containers and stored in a less than 90-day hazardous waste storage area at the RSA-EDS site, pending shipment to a permitted TSDF.
Decontaminated Metal Parts and Fragments – Arsenicals (DA/PD or any combination thereof)	Generated from treatment of recovered arsenical-filled items in the EDS	D004-D011; P036	PD is a listed hazardous waste (P036).[c] May contain TC metals.	Will be placed in containers and stored in a less than 90-day hazardous waste storage area at the RSA-EDS site, pending shipment to a permitted TSDF.

Table C-1-2. RCRA Hazardous Waste Designation, Rationale, and Disposition (Continued)

Waste Material[a]	Source	Waste Codes[b]	Basis for Designation	Disposition of Waste Material
Decontaminated Metal Parts and Fragments – FS Smoke	Generated from treatment of recovered FS smoke-filled items in the EDS	N/A	Decontaminated metal parts and fragments are not hazardous wastes.	Will be placed in containers and stored in a less than 90-day hazardous waste storage area at the RSA-EDS site, pending shipment to a permitted TSDF.
Decontaminated Metal Parts and Fragments – FM Smoke	Generated from treatment of recovered FM smoke-filled items in the EDS	N/A	Decontaminated metal parts and fragments are not hazardous wastes.	Will be placed in containers and stored in a less than 90-day hazardous waste storage area at the RSA-EDS site, pending shipment to a permitted TSDF.
Empty Overpacks and Containers	Generated during EDS operations	N/A	These containers meet the definition of RCRA empty under 40 CFR 261.7; AAC 335-14-2-.01(7).	Empty containers will be monitored and reused as appropriate. If containers cannot be reused, they will be managed in accordance with RSA solid waste requirements.
Unexploded Energetic Components	Incomplete energetic detonation in the EDS	D003, D004-D011	Although unlikely, waste stream may be generated if incomplete detonation of munition energetics occurs. Components may still be reactive and may contain heavy metals.	Components will be transferred to EOD personnel for disposition.
Spent Carbon (from EDS in-line drum filter and Environmental Enclosure Air Filtration System)	Generated from carbon changeout activities	D004-D011, D018, D019, D022, D027, D028, D029, D030, D032, D034, D039, D040, D043, P036,[c] P095[c]	May contain TC metals and TC organics associated with chemical agents and munition components. May contain waste codes associated with listed hazardous waste.	Will be placed in containers and stored in a less than 90-day hazardous waste storage area at the RSA-EDS site, pending shipment to a permitted TSDF. Carbon will be shipped for incineration.

Table C-1-2. RCRA Hazardous Waste Designation, Rationale, and Disposition (Continued)

Waste Material[a]	Source	Waste Codes[b]	Basis for Designation	Disposition of Waste Material
Used PPE (Includes gloves, masks, and other protective gear) Sulfur Mustard Agents (HD/HS/HT)	Generated from personnel use in providing worker protection from chemical agent	D004-D011, D018, D019, D022, D028, D029, D030, D034, D039, D040, D043	May be contaminated with chemical agent; thus, may contain TC metals and TC organics associated with chemical agents.	Used PPE may be sent to a laundry facility within RSA for reuse, and therefore, will not be designated a hazardous waste. In the event PPE cannot be sent to laundry for reuse, it will be placed in containers and stored in a less than 90-day hazardous waste storage area at the RSA-EDS site, pending shipment to a permitted TSDF.
Used PPE (Includes gloves, masks, and other protective gear) Nitrogen Mustard (HN-3)	Generated from personnel use in providing worker protection from chemical agent	D004-D011	May be contaminated with chemical agent; thus, may contain TC metals associated with chemical agents.	Used PPE may be sent to a laundry facility within RSA for reuse, and therefore, will not be designated a hazardous waste. In the event PPE cannot be sent to laundry for reuse, it will be placed in containers and stored in a less than 90-day hazardous waste storage area at the RSA-EDS site, pending shipment to a permitted TSDF.

Table C-1-2. RCRA Hazardous Waste Designation, Rationale, and Disposition (Continued)

Waste Material[a]	Source	Waste Codes[b]	Basis for Designation	Disposition of Waste Material
Used PPE (Includes gloves, masks, and other protective gear) Lewisite (L)	Generated from personnel use in providing worker protection from chemical agent	D004	May be contaminated with chemical agent; thus, may contain TC metal arsenic (D004) associated with lewisite.	Used PPE may be sent to a laundry facility within RSA for reuse, and therefore, will not be designated a hazardous waste. In the event PPE cannot be sent to laundry for reuse, it will be placed in containers and stored in a less than 90-day hazardous waste storage area at the RSA-EDS site, pending shipment to a permitted TSDF.
Used PPE (Includes gloves, masks, and other protective gear) CG	Generated from personnel use in providing worker protection from CG	P095[c]	If contaminated, may contain listed waste associated with CG.	Used PPE may be sent to a laundry facility within RSA for reuse, and therefore, will not be designated a hazardous waste. In the event PPE cannot be sent to laundry for reuse, it will be placed in containers and stored in a less than 90-day hazardous waste storage area at the RSA-EDS site, pending shipment to a permitted TSDF.

Table C-1-2. RCRA Hazardous Waste Designation, Rationale, and Disposition (Continued)

Waste Material[a]	Source	Waste Codes[b]	Basis for Designation	Disposition of Waste Material
Used PPE (Includes gloves, masks, and other protective gear) CNB	Generated from personnel use in providing worker protection from CNB	N/A	Will likely not be a hazardous waste.	Used PPE may be sent to a laundry facility within RSA for reuse, and therefore, will not be designated a hazardous waste. In the event PPE cannot be sent to laundry for reuse, it will be placed in containers and stored in a less than 90-day hazardous waste storage area at the RSA-EDS site, pending shipment to a permitted TSDF.
Used PPE (Includes gloves, masks, and other protective gear) CNS	Generated from personnel use in providing worker protection from CNS	D007, D008, D010, D018, D022, D027, D029, D039, D040, D043	May contain associated TC metals and TC organics found in CNS neutralent.	Used PPE may be sent to a laundry facility within RSA for reuse, and therefore, will not be designated a hazardous waste. In the event PPE cannot be sent to laundry for reuse, it will be placed in containers and stored in a less than 90-day hazardous waste storage area at the RSA-EDS site, pending shipment to a permitted TSDF.

Table C-1-2. RCRA Hazardous Waste Designation, Rationale, and Disposition (Continued)

Waste Material[a]	Source	Waste Codes[b]	Basis for Designation	Disposition of Waste Material
Used PPE (Includes gloves, masks, and other protective gear) Mustard/Arsenicals (HD/DA/PD)	Generated from personnel use in providing worker protection from mustard/arsenicals	D004-D011, D018, D019, D022, D028, D029, D030, D034, D039, D040, D043, P036[c]	May be contaminated with TC metals and organics associated with mustard. PD is a listed hazardous waste (P036).	Used PPE may be sent to a laundry facility within RSA for reuse, and therefore, will not be designated a hazardous waste. In the event PPE cannot be sent to laundry for reuse, it will be placed in containers and stored in a less than 90-day hazardous waste storage area at the RSA-EDS site, pending shipment to a permitted TSDF.
Used PPE (Includes gloves, masks, and other protective gear) Arsenicals (DA/PD)	Generated from changeout of personnel use in providing worker protection from arsenicals	D004, P036[c]	May contain TC metal arsenic (D004). PD is a listed hazardous waste (P036).	Used PPE may be sent to a laundry facility within RSA for reuse, and therefore, will not be designated a hazardous waste. In the event PPE cannot be sent to laundry for reuse, it will be placed in containers and stored in a less than 90-day hazardous waste storage area at the RSA-EDS site, pending shipment to a permitted TSDF.

Table C-1-2. RCRA Hazardous Waste Designation, Rationale, and Disposition (Continued)

Waste Material[a]	Source	Waste Codes[b]	Basis for Designation	Disposition of Waste Material
Used PPE (Includes gloves, masks, and other protective gear) – FS Smoke	Generated from personnel use in providing worker protection	N/A	Will likely not meet the definition of a hazardous waste.	Used PPE may be sent to a laundry facility within RSA for reuse, and therefore, will not be designated a hazardous waste. In the event PPE cannot be sent to laundry for reuse, it will be placed in containers and stored in a less than 90-day hazardous waste storage area at the RSA-EDS site, pending shipment to a permitted TSDF.
Used PPE (Includes gloves, masks, and other protective gear) – FM Smoke	Generated from personnel use in providing worker protection	N/A	Will likely not meet the definition of a hazardous waste.	Used PPE may be sent to a laundry facility within RSA for reuse, and therefore, will not be designated a hazardous waste. In the event PPE cannot be sent to laundry for reuse, it will be placed in containers and stored in a less than 90-day hazardous waste storage area at the RSA-EDS site, pending shipment to a permitted TSDF.
Grayloc® Seal and O-Rings	Generated from changeout of the EDS Grayloc Seal and Metal Door Rings	P036, P095	May contain listed waste if generated from treatment of PD or CG. Otherwise, will likely not meet the definition of a hazardous waste.	Will be placed in containers and stored in a less than 90-day hazardous waste storage area at the RSA-EDS site, pending shipment to a permitted TSDF.

Table C-1-2. RCRA Hazardous Waste Designation, Rationale, and Disposition (Continued)

Waste Material[a]	Source	Waste Codes[b]	Basis for Designation	Disposition of Waste Material
Solid Laboratory Waste – Sulfur Mustard Agents (HD/HS/HT)	Generated from mobile analytical platform operations and monitoring sample and analysis	D004-D011, D018, D019, D022, D028, D029, D030, D034, D039, D040, D043	Laboratory waste solids include decontaminated solids comprising laboratory labware, paper, vials, wipes, and gloves; decontaminated GC syringes; sampling equipment, plastic bags, sheeting, rags, cardboard, and stainless steel sample bottle assemblies and packing material. These wastes may contain TC metals and TC organics associated with mustard.	Will be placed in containers and stored in a less than 90-day hazardous waste storage area at the RSA-EDS site, pending shipment to a permitted TSDF.
Solid Laboratory Waste – Nitrogen Mustard Agent (HN-3)	Generated from mobile analytical platform operations and monitoring sample and analysis	D004-D011	Laboratory waste solids include decontaminated solids comprising laboratory labware, paper, vials, wipes, and gloves; decontaminated GC syringes; sampling equipment, plastic bags, sheeting, rags, cardboard, and stainless steel sample bottle assemblies and packing material. These wastes may contain TC metals associated with mustard.	Will be placed in containers and stored in a less than 90-day hazardous waste storage area at the RSA-EDS site, pending shipment to a permitted TSDF.
Solid Laboratory Waste – Lewisite (L)	Generated from mobile analytical platform operations and monitoring sample and analysis	D004	Laboratory waste solids include decontaminated solids comprising laboratory labware, paper, vials, wipes, and gloves; decontaminated GC syringes; sampling equipment, plastic bags, sheeting, rags, cardboard, and stainless steel sample bottle assemblies and packing material. These wastes may contain TC metal arsenic (D004) associated with lewisite.	Will be placed in containers and stored in a less than 90-day hazardous waste storage area at the RSA-EDS site, pending shipment to a permitted TSDF.

Table C-1-2. RCRA Hazardous Waste Designation, Rationale, and Disposition (Continued)

Waste Material[a]	Source	Waste Codes[b]	Basis for Designation	Disposition of Waste Material
Solid Laboratory Waste – CNB	Generated from mobile analytical platform operations and monitoring sample and analysis	D018, D019	Laboratory waste solids include decontaminated solids comprising laboratory labware, paper, vials, wipes, and gloves; decontaminated GC syringes; sampling equipment, plastic bags, sheeting, rags, cardboard, and stainless steel sample bottle assemblies and packing material. These wastes may contain TC organics associated with CNB.	Will be placed in containers and stored in a less than 90-day hazardous waste storage area at the RSA-EDS site, pending shipment to a permitted TSDF.
Solid Laboratory Waste – CNS	Generated from mobile analytical platform operations and monitoring sample and analysis	D007, D008, D010, D018, D022, D027, D029, D039, D040, D043	Laboratory waste solids include solids comprising laboratory labware, paper, vials, wipes, and gloves; decontaminated GC syringes; sampling equipment, plastic bags, sheeting, rags, cardboard, and stainless steel sample bottle assemblies and packing material. These wastes may contain TC metals and organics associated with CNS.	Will be placed in containers and stored in a less than 90-day hazardous waste storage area at the RSA-EDS site, pending shipment to a permitted TSDF.
Solid Laboratory Waste – Mustard Arsenicals (HD/PD/DA)	Generated from mobile analytical platform operations and monitoring sample and analysis	D004-D011, D018, D019, D022, D028, D029, D030, D034, D039, D040, D043, P036[c]	Laboratory waste solids include decontaminated solids comprising laboratory labware, paper, vials, wipes, and gloves; decontaminated GC syringes; sampling equipment, plastic bags, sheeting, rags, cardboard, and stainless steel sample bottle assemblies and packing material. These wastes may contain TC metals and organics associated with mustard. PD (P036) is a listed hazardous waste.	Will be placed in containers and stored in a less than 90-day hazardous waste storage area at the RSA-EDS site, pending shipment to a permitted TSDF.
Liquid Laboratory Waste – Sulfur Mustard Agents (HD/HS/HT)	Generated from mobile analytical platform operations	D004-D011, D018, D019, D022, D028, D029, D030, D034, D039, D040, D043, F001-F005	Liquid laboratory wastes include decontaminated chemical agent working standards and solutions used in chemical agent analysis and solvents.	Will be placed in containers and stored in a less than 90-day hazardous waste storage area at the RSA-EDS site, pending shipment to a permitted TSDF.

Table C-1-2. RCRA Hazardous Waste Designation, Rationale, and Disposition (Continued)

Waste Material[a]	Source	Waste Codes[b]	Basis for Designation	Disposition of Waste Material
Liquid Laboratory Waste – Nitrogen Mustard Agent (HN-3)	Generated from mobile analytical platform operations	D004-D011, F001-F005	Liquid laboratory wastes include decontaminated chemical agent working standards and solutions used in chemical agent analysis and solvents.	Will be placed in containers and stored in a less than 90-day hazardous waste storage area at the RSA-EDS site, pending shipment to a permitted TSDF.
Liquid Laboratory Waste – Lewisite (L)	Generated from mobile analytical platform operations	D004-D011, F001-F005	Liquid laboratory wastes include decontaminated chemical agent working standards and solutions used in chemical agent analysis and solvents.	Will be placed in containers and stored in a less than 90-day hazardous waste storage area at the RSA-EDS site, pending shipment to a permitted TSDF.
Liquid Laboratory Waste – CNB	Generated from mobile analytical platform operations	D018, D019, F001-F005	Liquid laboratory wastes include decontaminated laboratory working standards and solutions used in chemical analysis and solvents.	Will be placed in containers and stored in a less than 90-day hazardous waste storage area at the RSA-EDS site, pending shipment to a permitted TSDF.
Liquid Laboratory Waste – CNS	Generated from mobile analytical platform operations	D007, D008, D010, D018, D022, D027, D029, D039, D040, D043, F001-F005	Liquid laboratory wastes include decontaminated laboratory working standards and solutions used in chemical analysis and solvents.	Will be placed in containers and stored in a less than 90-day hazardous waste storage area at the RSA-EDS site, pending shipment to a permitted TSDF.
Liquid Laboratory Waste – Mustard/Arsenicals (HD/PD/DA)	Generated from mobile analytical platform operations	D004-D011, D018, D019, D022, D028, D029, D030, D034, D039, D040, D043, P036,[c] F001-F005	Liquid laboratory wastes include decontaminated laboratory working standards and solutions used in chemical analysis and solvents.	Will be placed in containers and stored in a less than 90-day hazardous waste storage area at the RSA-EDS site, pending shipment to a permitted TSDF.

Table C-1-2. RCRA Hazardous Waste Designation, Rationale, and Disposition (Continued)

Notes:

[a] Waste material represents waste to be treated and waste generated from EDS treatment process and support activities.

[b] Waste codes presented are potential waste codes based on previous EDS operation analytical data or codes anticipated based on nature of the waste. Note that waste codes for material generated during the EDS treatment process may change based on actual sampling and analysis results.

[c] Phosgene (CG) and phenyldichloroarsine (PD) are listed hazardous wastes and will retain Environmental Protection Agency (EPA) waste codes after treatment. EDS treatment meets the technology based treatment standards combustion and chemical oxidation for the two wastes (40 CFR 268.40), and therefore, meet the Land Disposal Restriction (LDR) requirements.

CFR	=	Code of Federal Regulations
EDS	=	Explosive Destruction System
EOD	=	explosive ordnance disposal
GC	=	gas chromatograph
MEA	=	monoethanolamine
N/A	=	not applicable
$NaMnO_4$	=	sodium permanganate
NaOH	=	sodium hydroxide
PPE	=	personal protective equipment
RCRA	=	Resource Conservation and Recovery Act
RSA	=	Redstone Arsenal
TC	=	toxicity characteristic
TSDF	=	treatment, storage, and disposal facility

Table C-1-3. General Description of Chemical Fill and Potential Item Types[a]

Chemical Fill	Potential Item Type(s)[a]
Sulfur Mustards (HD/HS/HT)	4.2-inch mortar 105mm projectile, M60 155mm projectile, M104/M105/M110
Nitrogen Mustard (HN-3)	German Traktor Rocket
Mustard (HD) + Arsenicals (phenyldichloroarsine [PD]/diphenylchloroarsine [DA]	German Land Mine 105mm German projectile 155mm German projectile
Lewisite (L)	105mm projectile, M60
Phosgene (CG)	4.2-inch mortar
Carbon tetrachloride + Chloroacetophenone + Benzene (CNB)	4.2-inch mortar
Chloroacetophenone + Chloropicrin + Chloroform (CNS)	4.2-inch mortar
Arsenicals (DA/PD)	German Traktor Rocket
Sulfur trioxide + Chlorsulfonic Acid (FS smoke)	4.2-inch mortar
Titanium tetrachloride (FM smoke)	75mm projectile 155mm projectile, MKII

Note:

[a] The data in this table are intended to give a general idea of the type of items from which the chemical fills originated. Specific recovered items will vary in configuration, chemical fill, total weight, fill weight, and presence of fuzes, bursters, boosters, and propellant depending on the history and condition of the specific recovered item.

Sources: Information presented based on historical document review conducted to date.

Table C-1-4. Physical and Chemical Characteristics of Explosives

Waste	Composition	Molecular Weight (g/mol)	Density (g/cm^3)	Explosion Temperature Test Value (°C)	Heat of Combustion (cal/g) at Constant Pressure
Tetryl	2,4,6-trinitrophenylmethylnitramine	287.15	1.73 (crystal) 1.62 (cast)	257	2,914
Tetrytol	70% tetryl 30% TNT	266	1.60 (cast)	275	3,136

Notes:

cal/g = calorie per gram
g/cm^3 = gram per cubic centimeter
g/mol = gram per mole
TNT = trinitrotoluene

Source: Technical Manual, *Army Ammunition Data Sheets, Artillery, Ammunition, Guns, Howitzers, Mortars, Recoilless Rifles, Grenade Launchers, and Artillery Fuzes* (FSC 1310, 1315, 1320, 1390) TM 43-0001-28, April 1994.

1 (This page intentionally left blank.)

C-2 WASTE ANALYSIS PLAN [40 CFR 270.14(b)(3) and 264.13(b) and (c); AAC 335-14-8-.02(5)(b)(3) and 335-14-5-.02(4)(b) and (c)]

This section describes how wastes will be characterized at the RSA-EDS site operations and addresses: (1) analytical parameters and the rationale for their selection; (2) test methods; (3) sampling methods; (4) frequency of analyses; (5) additional requirements for wastes generated offsite; and (6) additional requirements for ignitable, reactive, or incompatible wastes.

C-2a Parameters and Rationale [40 CFR 264.13(b)(1); AAC 335-14-5-.02(4)(b)(1)]

Waste stream analytical parameters and the rationale for selecting these parameters are summarized in **Table C-2-1**.[1]

Note that the items will have been characterized for treatment purposes prior to acceptance at the RSA-EDS site for treatment, as described in **Section C-1a(3)** of this permit modification application. Therefore, no additional analysis is required.

C-2b Test Methods [40 CFR 264.13(b)(2); AAC 335-14-5.02(4)(b)(2)]

Table C-2-1 lists the test methods that will be used for characterizing wastes. Both process knowledge and sampling and analysis will be used as appropriate. Analytical methods used for waste characterization are from: *Test Methods for Evaluating Solid Waste, Physical/Chemical Methods*, SW-846, current edition; *Annual Book of ASTM Standards*, American Society for Testing and Materials; or other EPA-recognized methods.

Chemical agent analysis will be conducted using U.S. Army-approved analytical methods. General laboratory quality assurance/quality control (QA/QC) procedures will be in accordance with the specified analytical methods for individual parameters (see **Table C-2-1**), as described in SW-846, *Test Methods for Evaluating Solid Waste, Physical/Chemical Methods*, current edition. QA/QC requirements for waste analysis are provided in the *Waste Analysis Quality Assurance/Quality Control Plan* included in **Attachment C-5**. QA/QC for chemical agent analysis will be in accordance with the U.S. Army Chemical Materials Agency *Programmatic Laboratory and Monitoring Quality Assurance Plan*.

---

[1] All tables are located at the end of this section.

C-2c Sampling Methods [40 CFR 264.13(b)(3) and Part 261 Appendix I; AAC 335-14-5-.02(4)(b)(3) and 335-14-2 Appendix I]

Table C-2-2 lists the type of equipment and sampling methods, where appropriate, that will be used to obtain a representative sample of each waste type. All samples will be analyzed for chemical agent (as applicable) prior to being sent offsite to a contract laboratory for hazardous waste characterization. Methods used to obtain a representative sample will be consistent with the sampling approaches and protocols described in *Test Methods for Evaluating Solid Waste, Physical/Chemical Methods*, SW-846, current edition. For each waste stream sampled, appropriate QA/QC samples will be collected, as shown in **Table C-2-3**. Appropriate sampling techniques and sample containers selected are based on knowledge of the waste material matrix (solid, liquid) and analyte or parameter of interest.

C-2d Laboratory QA/QC

An analytical laboratory must conduct its operations in such a way as to provide reliable information. The RSA-EDS site Mobile Analytical Platform will be used for chemical agent analysis. The QA/QC of data generated by the onsite Mobile Analytical Platform will be controlled by the U.S. Army Chemical Materials Agency *Programmatic Laboratory and Monitoring Quality Assurance Plan*.

A contract laboratory accredited in the National Environmental Laboratory Accreditation Program (NELAP) will be used for Resource Conservation and Recovery Act (RCRA) characterization sample analyses and that laboratory's quality assurance plan will be followed for those analyses. The Recovered Chemical Materiel Directorate (RCMD) will ensure that the contract laboratory's QA/QC training program includes, at a minimum, sample custody procedures, an analyst training program, data review procedures, internal laboratory samples, and performance audits. The laboratory must have a data management system that allows them to meet analytical holding times and results reporting requirements. The laboratory must also achieve method detection limits sufficient to meet the established regulatory limits. The laboratory must also have acceptable preparation, analytical, and cleanup methodologies.

C-2e Frequency of Analyses [40 CFR 264.13(b)(4); AAC 335-14-5-.02(4)(b)(4)]

Each neutralent batch will be sampled and analyzed to ensure treatment levels identified in **Table C-1-1** are met. A neutralent batch is defined as the volume of treatment reagent and chemical fill contained in the EDS Containment Vessel after the munition or other container has been explosively opened (by

detonation) and the chemical fill has been treated. A rinsewater batch is the volume of liquid contained in the EDS Containment Vessel that is used to rinse the vessel after the neutralent has been drained.

Chemical agent analysis will be performed on every batch of chemical agent neutralent generated. Each batch of CG, FS smoke, and FM smoke neutralent generated will be sampled for pH measurement.

Every container of solid waste generated during EDS chemical agent treatment process will be agent-screened and must meet the levels identified in **Table C-1-1** before the wastes can be shipped offsite to a permitted TSDF for further management.

For RCRA waste characterization sampling and analysis, each neutralent and rinsewater waste container resulting from a treatment batch will be discretely sampled and those discrete samples from each waste stream will be composited for analysis.

In the future, process knowledge may be used in lieu of sampling or the frequency of sampling each container of neutralent and rinsewater waste container generated from a treatment batch may be reduced based on a statistical review of the analytical data, consideration of the hazardous constituents present in the munitions/items being treated, and Alabama Department of Environmental Management (ADEM) approval. **Table C-2-2** identifies the frequency of sampling and analysis.

C-2f Additional Requirements for Wastes Generated Offsite [40 CFR 264.13(b)(5); AAC 335-14-5-.02(4)(b)5]

All items to be treated in the EDS units will come from RSA. Therefore, this section is not applicable.

C-2g Additional Requirements for Ignitable, Reactive, or Incompatible Wastes [40 CFR 264.17 and 264.13(b)(6); AAC 335-14-5-.02(8) and 335-14-5-.02(4)(b)6]

The waste characterization program and information described in **Section C-1**, Chemical and Physical Analyses, and **Section C-2**, Waste Analysis Plan, provide the information and methods needed to identify ignitable, reactive, and incompatible wastes. The EDS units will treat items that may contain energetic material (reactives); thus, the EDS units have been designed to manage the hazards inherent in handling and managing the reactive materials. Additionally, the chemical fill and explosive components that will be treated in the EDS units are compatible with the associated treatment reagents and the process equipment to be used.

Recovered items will be brought to an EDS unit(s) for immediate treatment. The Army will contain, store, and manage all hazardous waste to prevent chemical reactions.

C-2h Additional Requirements Pertaining to Incinerator, Boiler, and Industrial Furnace Facilities [40 CFR 264.340; AAC 335-14-5-.15(1)]

The hazardous waste management units addressed in this permit modification application are not incinerators, boilers, or industrial furnaces that burn hazardous wastes; therefore, this section is not applicable.

C-2i Additional Requirements Pertaining to Containment Buildings [40 CFR 264.1100; AAC 335-14-5-.30(1)]

The hazardous waste management units addressed in this permit modification application are not containment buildings; therefore, this section is not applicable.

Table C-2-1. Selected Parameters, Test Methods, and Rationale for EDS Process Wastes

Waste Stream	Parameter/Analysis	Test Methods[a,b,c]	Analysis Rationale
Sulfur Mustard (HD/HS/HT) and Nitrogen Mustard (HN-3) Neutralents	H or HN-3	U.S. Army-approved methods	Verify treatment level is met.
	TC Metals	Process knowledge or 3010A or 3020A/6010C or 6020A; 7470A	Ensure safe handling, storage, and treatment; compliance with applicable regulations; ensure that all physical and chemical characteristics are known prior to disposition; determine further waste management needs.
	TC SVOCs	Process knowledge or 3510C or 3520C/8270D	
	TC VOCs	Process knowledge or 5030B/8260B	
	pH	Process knowledge or 9040C	Process knowledge will be used for RCRA waste characterization where appropriate.
	Ignitability	Process knowledge or 1010A or 1020B	
Lewisite (L) Neutralents	Lewisite	U.S. Army-approved methods	Verify treatment level is met.
	TC Metals	Process knowledge or 3010A or 3020A/6010C or 6020A; 7470A	Ensure safe handling, storage, and treatment; compliance with applicable regulations; ensure that all physical and chemical characteristics are known prior to disposition; determine further waste management needs.
	TC SVOCs	Process knowledge or 3510C or 351020C/8270D	
	TC VOCs	Process knowledge or 5030B/8260B	
	pH	Process knowledge or 9040C	Process knowledge will be used for RCRA waste characterization where appropriate
	Ignitability	Process knowledge or 1010A or 1020B	
Phosgene (CG) Neutralents	pH[d]	9041A/9040C	Verify treatment level is met
	TC Metals	Process knowledge or 3010A or 3020A/6010C or 6020A; 7470A	Ensure safe handling, storage, and treatment; compliance with applicable regulations; ensure that all physical and chemical characteristics are known prior to disposition; determine further waste management needs.
	TC SVOCs	Process knowledge or 3510C or 3520C/8270D	
	TC VOCs	Process knowledge or 5030B/8260B	Process knowledge will be used for RCRA waste characterization where appropriate.

Table C-2-1. Selected Parameters, Test Methods, and Rationale for EDS Process Wastes (Continued)

Waste Stream	Parameter/Analysis	Test Methods[a,b,c]	Analysis Rationale
CNB/CNS Neutralents	CN, PS	U.S. Army-approved methods	Verify treatment level is met.
	TC Metals	Process knowledge or 3010A or 3020A/6010C or 6020A; 7470A	Ensure safe handling, storage, and treatment; compliance with applicable regulations; ensure that all physical and chemical characteristics are known prior to disposition; determine further waste management needs.
	TC SVOCs	Process knowledge or 3510C or 3520C/8270D	
	TC VOCs	Process knowledge or 5030B/8260B	
	pH	Process knowledge or 9040C	Process knowledge will be used for RCRA waste characterization where appropriate.
Mustard Arsenical Neutralents (HD/PD/DA or combination thereof)	H/PD/DA	U.S. Army-approved methods	Verify treatment level is met.
	TC Metals	Process knowledge or 3010A or 3020A/6010C or 6020A; 7470A	Ensure safe handling, storage, and treatment; compliance with applicable regulations; ensure that all physical and chemical characteristics are known prior to disposition; determine further waste management needs.
	TC SVOCs	Process knowledge or 3510C or 3520C/8270D	
	TC VOCs	Process knowledge or 5030B/8260B	
	pH	Process knowledge or 9040C	Process knowledge will be used for RCRA waste characterization where appropriate.
	Ignitability	Process knowledge or 1010A or 1020B	
Arsenical Neutralent (DA/PD)	DA/PD	U.S. Army-approved methods	Verify treatment level is met.
	TC Metals	Process knowledge or 3010A or 3020A/6010C or 6020A; 7470A	Ensure safe handling, storage, and treatment; compliance with applicable regulations; ensure that all physical and chemical characteristics are known prior to disposition; determine further waste management needs.
	pH	Process knowledge or 9040C	
	TC SVOCs	Process knowledge or 3510C or 3520C/8270D	
	TC VOCs	Process knowledge or 5030B/8260B	Process knowledge will be used for RCRA waste characterization where appropriate.
	Ignitability	Process knowledge or 1010A or 1020B	

Table C-2-1. Selected Parameters, Test Methods, and Rationale for EDS Process Wastes (Continued)

Waste Stream	Parameter/Analysis	Test Methods[a,b,c]	Analysis Rationale
FM and FS Smoke Neutralents	pH[d]	9041A/9040C	Verify treatment level is met.
	TC Metals	Process knowledge or 3010A or 3020A/6010C or 6020A; 7470A	Ensure safe handling, storage, and treatment; compliance with applicable regulations; ensure that all physical and chemical characteristics are known prior to disposition; determine further waste management needs.
	TC SVOCs	Process knowledge or 3510C or 3520C/8270D	
	TC VOCs	Process knowledge or 5030B/8260B	
	Ignitability	Process knowledge or 1010A or 1020B	Process knowledge will be used for RCRA waste characterization where appropriate.
Rinsewaters	TC Metals	Process knowledge or 3010A or 3020A/6010C or 6020A; 7470A	Ensure safe handling, storage, and treatment; compliance with applicable regulations; ensure that all physical and chemical characteristics are known prior to disposition; determine further waste management needs.
	TC SVOCs	Process knowledge or 3510C or 3520C/8270D	
	TC VOCs	Process knowledge or 5030B/8260B	
	pH	Process knowledge or 9040C	Process knowledge will be used for RCRA waste characterization where appropriate.
	Ignitability	Process knowledge or 1010A or 1020B	
Spent Decontamination Solution[e]	H/HN-3/L (as applicable)	Process knowledge or U.S. Army-approved methods	Ensure safe handling, storage, and treatment; compliance with applicable regulations; ensure that all physical and chemical characteristics are known prior to disposition; determine further waste management needs.
	TC Metals	Process knowledge or 3010A or 3020A/6010C or 6020A; 7470A	
	TC SVOCs	Process knowledge or 3510C or 3520C/8270D	Process knowledge will be used for RCRA waste characterization where appropriate.
	TC VOCs	Process knowledge or 5030B/8260B	
	pH	Process knowledge or 9040C	
	Ignitability	Process knowledge or 1010A or 1020B	

Table C-2-1. Selected Parameters, Test Methods, and Rationale for EDS Process Wastes (Continued)

Waste Stream	Parameter/Analysis	Test Methods[a,b,c]	Analysis Rationale
Spent Carbon (from EDS Drum Filter, Environmental Enclosure Carbon Filtration System)	H/HN-3/L (as applicable) TC Organics TC Metals	U.S. Army-approved headspace monitoring methods Process knowledge Process knowledge	Ensure safe handling, storage, treatment; compliance with applicable regulations; determine further waste management needs. Process knowledge will be used for RCRA waste characterization where appropriate.
Potentially Contaminated PPE	H/HN-3/L (as applicable) TC Organics TC SVOCs TC VOCs	U.S. Army-approved headspace monitoring methods Process knowledge Process knowledge Process knowledge	Ensure safe handling, storage, and treatment; compliance with applicable regulations; determine further waste management needs and container management practices. Process knowledge will be used for RCRA waste characterization where appropriate.
Unexploded Energetic or Propellant Compounds (if generated)	H/HN-3/L (as applicable)	U.S. Army-approved headspace monitoring methods	Ensure safe handling, storage, and treatment; compliance with applicable regulations; determine further waste management needs and container management practices.
Solid Laboratory Waste (Including Labware, Sampling Equipment, Plastic Bags, Stainless Steel Sample Bottle Assemblies, and Packing Material)	H/HN-3/L (as applicable) TC Metals TC Organics	U.S. Army-approved headspace monitoring methods Process knowledge Process knowledge	Ensure safe handling, storage, and treatment; compliance with applicable regulations; determine further waste management needs and container management practices. Process knowledge will be used for RCRA waste characterization where appropriate.
Grayloc® Seal and O-Rings	H/HN-3/L (as applicable)	U.S. Army-approved headspace monitoring methods	Ensure safe handling, storage, and treatment; compliance with applicable regulations; determine further waste management needs and container management practices.

Table C-2-1. Selected Parameters, Test Methods, and Rationale for EDS Process Wastes (Continued)

Notes:

[a] Methods are from *Test Methods for Evaluating Solid Waste, Physical/Chemical Methods*, SW-846, current edition, unless otherwise specified. The analytical methods listed may have been updated since this permit modification application was developed. The most current methods will be used during EDS operations.

[b] Process knowledge may be used in lieu of sampling for RCRA waste characterization of neutralent and rinsewater wastes based on statistical review of analytical data, consideration of hazardous constituents present in the munitions/items being treated, and Alabama Department of Environmental Management (ADEM) approval.

[c] Sulfur Mustards HD, HS, and HT are analyzed as H.

[d] Method 9041A (pH paper method) will be used in the field to determine if treatment level has been met. Method 9040C will be used for RCRA waste characterization analysis conducted at the contract laboratory.

[e] If decontamination solutions were used for decontaminating chemical agent, then analyze for potential agent contaminants listed.

DA	=	diphenylchloroarsine
EDS	=	Explosive Destruction System
FM smoke	=	titanium tetrachloride
FS smoke	=	sulfur trioxide + chlorosulfonic acid
H	=	Levinstein mustard
HD	=	distilled sulfur mustard
HN-3	=	nitrogen mustard
HS	=	sulfur mustard
HT	=	mustard-T mixture
L	=	lewisite
PD	=	phenyldichloroarsine
PPE	=	personal protective equipment
PS	=	chloropicrin
RCRA	=	Resource Conservation and Recovery Act
SVOC	=	semivolatile organic compound
TC	=	toxicity characteristic
VOC	=	volatile organic compound

Table C-2-2. Sampling Equipment, Methods, and Frequency

Media and Waste Stream	Sample Type[a]	Method and Equipment[b]	Frequency
Vapor			
Headspace Monitoring for H/HN-3/L	Grab	Collect headspace sample in sample bag from Containment Vessel per EDS SOP and analyze before opening door.	Each chemical agent treatment operation.
Headspace Monitoring of Solids: Metal Parts and Fragments Spent Carbon Filters Laboratory Solid Waste Personnel Protective Equipment Grayloc® Seal and O-rings Unexploded Energetic Components (if generated)	Grab	Waste material will be bagged inside a waste container and the bagged contents will be monitored using MINICAMS® or DAAMS tubes.	Every container of solid waste generated from an EDS chemical agent treatment process.
Liquid			
Neutralent (for Agent Analysis, Process Monitoring, and RCRA Waste Characterization)	Grab	For chemical agent samples, collect liquid sample in a stainless steel bottle, glass jar or bottle, from EDS Containment Vessel sample valve assembly per EDS SOP. For pH analysis (CG, FS smoke and FM smoke neutralent), CN and PS (CNB and CNS neutralent), collect sample from Valve 28 of the Containment Vessel effluent discharge line per EDS SOP. For RCRA waste characterization sampling, collect discrete sample from each neutralent waste container using a COLIWASA or drum thief per EDS SOP or ASTM D5495-03. Composite discrete samples.	For chemical agent analysis, each batch of neutralent generated. For CNB and CNS neutralents, each batch generated. For CG, FS and FM smokes, pH analysis of each batch of neutralent generated. Each neutralent batch generated. For RCRA waste characterization, composite discrete neutralent waste container samples for analysis.

Table C-2-2. Sampling Equipment, Methods, and Frequency (Continued)

Media and Waste Stream	Sample Type[a]	Method and Equipment[b]	Frequency
Rinsewater	Grab	For RCRA waste characterization sampling, collect discrete sample from each rinsewater waste container using a COLIWASA per EDS SOP or ASTM D5495-03.	Each rinsewater batch generated. For RCRA waste characterization, composite discrete rinsewater waste container samples for analysis.
Spent Decontamination Solutions and Containment Pan/Sump Liquids/PDS Liquid Waste (for Agent Analysis and RCRA Waste Characterization)	Grab	Collect liquid samples from waste container using a COLIWASA per EDS SOP or ASTM D5495-03.	Each container (drum) generated.

Notes:

[a] For each liquid waste stream sampled, appropriate QA/QC samples will be collected as shown in **Table C-2-3** and described in **Attachment C-4**.

[b] As applicable, equipment used to sample waste materials will be disposable or designed for easy decontamination. Contaminated disposable equipment will be managed as hazardous waste, as appropriate. Cleanable equipment will be thoroughly decontaminated prior to reuse. Spent decontamination solutions will be managed as hazardous waste as appropriate.

CG = phosgene
CN = chloroacetophenone
CNB = carbon tetrachloride + chloroacetophenone + benzene
CNS = chloroacetophenone + chloropicrin + chloroform
COLIWASA = composite liquid waste sampler
DAAMS = Depot Area Air Monitoring System
EDS = Explosive Destruction System
FM smoke = titanium tetrachloride
FS smoke = sulfur trioxide + chlorosulfonic acid
HN-3 = nitrogen mustard
HS = sulfur mustard
HT = mustard-T mixture
L = lewisite
PDS = Personnel Decontamination Station
PS = chloropicrin
RCRA = Resource Conservation and Recovery Act
SOP = Standing Operating Procedure

Table C-2-3. Sample Quantity Requirements

Waste Stream	Parameter/Analysis[a]	Sample[b]	Field Duplicate Sample	Trip Blank[c]
Sulfur Mustard (HD/HS/HT) and Nitrogen Mustard (HN-3) Neutralents	H or HN-3	(1) – 25 mL Stainless steel bottle or 125 mL glass jar or bottle with a Teflon-lined cap	(1) – 25 mL Stainless steel bottle or 125 mL glass jar or bottle with a Teflon-lined cap	
	TC Metals	(1) – 1 L HDPE bottle (1) – 500 mL HDPE bottle	(1) – 1 L HDPE bottle (1) – 500 mL HDPE bottle	
	TC SVOCs	(2) – 1 L Amber glass bottles w/PTFE-lined cap	(2) – 1 L Amber glass bottles w/PTFE-lined cap	
	TC VOCs	(3) – 40 mL Amber glass VOA vials	(3) – 40 mL Amber glass VOA vials	(1) – 40 mL Amber glass VOA vial (deionized water)
	pH	(1) – 250 mL HDPE bottle	(1) – 250 mL HDPE bottle	
	Ignitability	(1) – 500 mL Glass bottle	(1) – 500 mL Glass bottle	
Lewisite Neutralents	Lewisite	(1) – 25 mL Stainless steel bottle or 125 mL glass jar or bottle with a Teflon-lined cap	(1) – 25 mL Stainless steel bottle or 125 mL glass jar or bottle with a Teflon-lined cap	
	TC Metals	(1) – 1 L HDPE bottle (1) – 500 mL HDPE bottle	(1) – 1 L HDPE bottle (1) – 500 mL HDPE bottle	
	TC SVOCs	(2) – 1 L Amber glass bottles w/PTFE-lined cap	(2) – 1 L Amber glass bottles w/PTFE-lined cap	
	TC VOCs	(3) – 40 mL Amber glass VOA vials	(3) – 40 mL Amber glass VOA vials	(1) – 40 mL Amber glass VOA vial (deionized water)
	pH	(1) – 250 mL HDPE bottle	(1) – 250 mL HDPE bottle	
	Ignitability	(1) – 500 mL Glass bottle	(1) – 500 mL Glass bottle	

Table C-2-3. Sample Quantity Requirements (Continued)

Waste Stream	Parameter/Analysis[a]	Sample[b]	Field Duplicate Sample	Trip Blank[c]
Phosgene (CG) Neutralents	pH	(1) – 250 mL HDPE bottle	(1) – 250 mL HDPE bottle	
	TC Metals	(1) – 1 L HDPE bottle (1) – 500 mL HDPE bottle	(1) – 1 L HDPE bottle (1) – 500 mL HDPE bottle	
	TC SVOCs	(2) – 1 L Amber glass bottles w/PTFE-lined cap	(2) – 1 L Amber glass bottles w/PTFE-lined cap	
	TC VOCs	(3) – 40 mL Amber glass VOA vials	(3) – 40 mL Amber glass VOA vials	(1) – 40 mL Amber glass VOA vial (deionized water)
CNB and CNS Neutralents	CN/PS	(1) – 25 mL Stainless steel bottle or 125 mL glass jar or bottle with a Teflon-lined cap	(1) – 25 mL Stainless steel bottle or 125 mL glass jar or bottle with a Teflon-lined cap	
	TC Metals	(1) – 1 L HDPE bottle (1) – 500 mL HDPE bottle	(1) – 1 L HDPE bottle (1) – 500 mL HDPE bottle	
	TC SVOCs	(2) – 1 L Amber glass bottles w/PTFE-lined cap	(2) – 1 L Amber glass bottles w/PTFE-lined cap	
	TC VOCs	(3) – 40 mL Amber glass VOA vials	(3) – 40 mL Amber glass VOA vials	(1) – 40 mL Amber glass VOA vial (deionized water)
	pH	(1) – 250 mL HDPE bottle	(1) – 250 mL HDPE bottle	
Arsenical Neutralents (DA/PD)	DA/PD	(1) – 25 mL Stainless steel bottle or 125 mL glass jar or bottle with a Teflon-lined cap	(1) – 25 mL Stainless steel bottle or 125 mL glass jar or bottle with a Teflon-lined cap	
	TC Metals	(1) – 1 L HDPE bottle (1) – 500 mL HDPE bottle	(1) – 1 L HDPE bottle (1) – 500 mL HDPE bottle	
	TC SVOCs	(2) – 1 L Amber glass bottles w/PTFE-lined cap	(2) – 1 L Amber glass bottles w/PTFE-lined cap	
	TC VOCs	(3) – 40 mL Amber glass VOA vials	(3) – 40 mL Amber glass VOA vials	(1) – 40 mL Amber glass VOA vial (deionized water)
	Ignitability	(1) – 500 mL Glass bottle	(1) – 500 mL Glass bottle	
	pH	(1) – 250 mL HDPE bottle	(1) – 250 mL HDPE bottle	

Table C-2-3. Sample Quantity Requirements (Continued)

Waste Stream	Parameter/Analysis[a]	Sample[b]	Field Duplicate Sample	Trip Blank[c]
Mustard Arsenical Neutralents (HD/DA/PD)	H/DA/PD	(1) – 25 mL Stainless steel bottle or 125 mL glass jar or bottle with a Teflon-lined cap	(1) – 25 mL Stainless steel bottle or 125 mL glass jar or bottle with a Teflon-lined cap	
	TC Metals	(1) – 1 L HDPE bottle (1) – 500 mL HDPE bottle	(1) – 1 L HDPE bottle (1) – 500 mL HDPE bottle	
	TC SVOCs	(2) – 1 L Amber glass bottles w/PTFE-lined cap	(2) – 1 L Amber glass bottles w/PTFE-lined cap	
	TC VOCs	(3) – 40 mL Amber glass VOA vials	(3) – 40 mL Amber glass VOA vials	(1) – 40 mL Amber glass VOA vial (deionized water)
	pH	(1) – 250 mL HDPE bottle	(1) – 250 mL HDPE bottle	
	Ignitability	(1) – 500 mL Glass bottle	(1) – 500 mL Glass bottle	
FM and FS Smoke Neutralents	pH	(1) – 250 mL HDPE bottle	(1) – 250 mL HDPE bottle	
	TC Metals	(1) – 1 L HDPE bottle (1) – 500 mL HDPE bottle	(1) – 1 L HDPE bottle (1) – 500 mL HDPE bottle	
	TC SVOCs	(2) – 1 L Amber glass bottles w/PTFE-lined cap	(2) – 1 L Amber glass bottles w/PTFE-lined cap	
	TC VOCs	(3) – 40 mL Amber glass VOA vials	(3) – 40 mL Amber glass VOA vials	(1) – 40 mL Amber glass VOA vial (deionized water)
	Ignitability	(1) – 500 mL Glass Bottle	(1) – 500 mL Glass Bottle	
Rinsewaters	TC Metals	(1) – 1 L HDPE bottle (1) – 500 mL HDPE bottle	(1) – 1 L HDPE bottle (1) – 500 mL HDPE bottle	
	TC SVOCs	(2) – 1 L Amber glass bottles w/PTFE-lined cap	(2) – 1 L Amber glass bottles w/PTFE-lined cap	
	TC VOCs	(3) – 40 mL Amber glass VOA vials	(3) – 40 mL Amber glass VOA vials	(1) – 40 mL Amber glass VOA vial (deionized water)
	pH	(1) – 250 mL HDPE bottle	(1) – 250 mL HDPE bottle	
	Ignitability	(1) – 500 mL Glass bottle	(1) – 500 mL Glass bottle	

Table C-2-3. Sample Quantity Requirements (Continued)

Waste Stream	Parameter/Analysis[a]	Sample[b]	Field Duplicate Sample	Trip Blank[c]
Spent Decontamination Solution	H/HN-3/Lewisite (as applicable)	(1) – 25 mL Stainless steel bottle or 125 mL glass jar or bottle with a Teflon-lined cap	(1) – 25 mL Stainless steel bottle or 125 mL glass jar or bottle with a Teflon-lined cap	
	TC Metals	(1) – 1 L HDPE bottle (1) – 500 mL HDPE bottle	(1) – 1 L HDPE bottle (1) – 500 mL HDPE bottle	
	TC SVOCs	(2) – 1 L Amber glass bottles w/PTFE-lined cap	(2) – 1 L Amber glass bottles w/PTFE-lined cap	
	TC VOCs	(3) – 40 mL Amber glass VOA vials	(3) – 40 mL Amber glass VOA vials	(1) – 40 mL Amber glass VOA vial (deionized water)
	pH	(1) – 250 mL HDPE bottle	(1) – 250 mL HDPE bottle	
	Ignitability	(1) – 500 mL Glass bottle	(1) – 500 mL Glass bottle	

Notes:

[a] Sulfur mustards HD/HS/HT are analyzed as H.
[b] All sample containers should be filled completely.
[c] One trip blank per cooler containing VOC samples.

CN = chloroacetophenone
CNB = carbon tetrachloride + chloroacetophenone + benzene
CNS = chloroacetophenone + chloropicrin + chloroform
DA = diphenylchloroarsine
FM smoke = titanium tetrachloride
FS smoke = sulfur trioxide + chlorosulfonic acid
H = Levinstein mustard
HD = distilled sulfur mustard
HDPE = high-density polyethylene
HN-3 = nitrogen mustard
HS = sulfur mustard
HT = mustard-T mixture
L = liter
mL = milliliter
PD = phenyldichloroarsine
PS = chloropicrin
PTFE = polytetrafluoroethylene (Teflon®)
SVOC = semivolatile organic compound
TC = toxicity characteristic
VOA = volatile organic analysis
VOC = volatile organic compound

(This page intentionally left blank.)

C-3 WASTE ANALYSIS REQUIREMENTS PERTAINING TO LAND DISPOSAL RESTRICTIONS [40 CFR 270.14(b)(2), 264.13, and 264.73, Part 268; AAC 335-14-8-.02(5)(b)2, 335-14-5-.02(4)(a) through (c), 335-14-5-.05(4), and 335-14-9-.01]

The Hazardous and Solid Waste Amendments of RCRA prohibit the land disposal of certain types of wastes that are subject to RCRA and establish concentration limits and treatment standards for certain restricted wastes prior to land disposal. All RSA-EDS hazardous wastes will be managed according to Land Disposal Restriction (LDR) requirements. Information provided in this section describes how RSA-EDS wastes subject to LDRs will be identified, characterized, documented, and certified.

The energetic components of items processed in the EDS units at the RSA-EDS site will meet the LDR requirements for reactivity by deactivation through detonation as well as treating residues using chemical reactions via treatment reagents. Likewise, the treatment standard for phosgene, a P095 listed waste, is met through detonation and chemical oxidation via the treatment reagent. Other wastes generated from EDS operations may need to be treated to achieve the treatment standards for Ignitibility (D001), Corrosivity (D002), Reactivity (D003), toxicity characteristic metals (D004 through D011) and toxicity characteristic organics (D012 through D043), and applicable underlying hazardous constituents associated with organic hazardous waste constituents prior to land disposal. These waste streams will be containerized and stored in a less than 90-day hazardous waste storage area pending shipment to a permitted hazardous waste TSDF for further management.

C-3a Waste Analysis [40 CFR 270.14(b)(2), 261.20 through 261.24, 264.13, 268.1, 268.7, 268.9, 268.32 through 268.37, 268.40 through 268.43; AAC 335-14-8-.02(5)(b)2, 335-14-2-.03(1) through (5), 335-14-5-.02(4)(a) through (c), 335-14-9-.01(1), (7) and (9), 335-14-9-.03(13) through (18), and 335-14-9-.04(1) through (4)]

Materials to be treated and the resulting waste and residuals from EDS processing will be characterized as described in **Sections C-1**, Chemical and Physical Analyses, and **C-2**, Waste Analysis Plan. The information provided by this characterization allows for determinations of LDR applicability and compliance with LDR treatment standards, concentration limits, identification of underlying hazardous constituents, and/or notification and certification requirements.

The sampling and analytical methods that will be followed for waste subject to LDRs are the same as described in **Section C-2**, Waste Analysis Plan, and **Table C-2-1**.

In the absence of process knowledge, the primary analytical method to determine the presence and concentrations of LDR materials in a waste sample will be the Toxicity Characteristic Leaching Procedure, and the resulting extract will be analyzed for metals and organics. To determine if free liquids are present, process knowledge will be used or the paint filter liquids test will be performed.

The frequency of analysis requirements for wastes subject to LDRs is the same as described in **Section C-2e**, Frequency of Analyses, and **Table C-2-2**.

C-3a(1) Spent Solvent and Dioxin Wastes [40 CFR 270.14(b)(2), 264.13, 268.7, and 268.31; AAC 335-14-8-.02(5)(b)(2), 335-14-5-.02(4)(a) through (c), 335-14-9-.01(7), and 335-14-9-.03(12)]

All F001 through F005 waste constituents will be identified on the LDR notification shipped to subsequent TSDFs at the time of shipment.

C-3a(2) Listed Wastes [40 CFR 270.14(b)(2), 264.13, 268.7, 268.33 through 268.36, 268.41, 268.42, and 268.43; AAC 335-14-8-.02(5)(b)(2), 335-14-5-.02(4)(a) through (c), 335-14-9-.01(7), 335-14-9-.03(14) and (17), and 335-14-9-.04(2) through (4)]

All wastes generated from EDS treatment operations and support activities being shipped offsite (see **Table C-1-2**) to a permitted TSDF will be evaluated before shipment to identify listed hazardous waste constituents and applicable waste codes. These waste codes will be identified on an LDR notification given to the subsequent TSDFs with each shipment.

C-3a(3) Characteristic Wastes [40 CFR 270.14(b)(2), 261.3(d)(1), 264.13, 268.7, 268.9, Part 268 Appendix VI, and Part 268 Appendix IX; AAC 335-14-8-.02(5)(b)2, 335-14-2-.01(3)(d)1, 335-14-5-.02(4)(a) through (c), 335-14-9-.01(7), 335-14-9-.01(9), 335-14-9 Appendix VI, and 335-14-9 Appendix IX]

Prior to shipment offsite, wastes generated from EDS treatment operations and support activities (see **Table C-1-2**) will be evaluated to identify characteristic hazardous waste constituents and applicable waste codes. These waste codes will be identified on an LDR notification given to the subsequent TSDF with each shipment.

C-3a(4) Radioactive Mixed Waste [40 CFR 270.14(b)(2), 264.13, 268.7, 268.35, 268.36, and 268.42(d); AAC 335-14-8-.02(5)(b)2, 335-14-5-.02(4)(a) through (c), 335-14-9-.01(7), 335-14-9-.03(16), 335-14-9-.03(17), and 335-14-9-.04(3)]

The hazardous waste management units addressed in this permit modification application will not generate or treat any radioactive mixed waste; therefore, this section is not applicable.

C-3a(5) Leachates [40 CFR 270.14(b)(2), 260.10, 264.13, and 268.35; AAC 335-14-8-.02(5)(b)2, 335-14-1-.02(1)(a)147, 335-14-5-.02(4)(a) through (c), and 335-14-9-.03(16)]

The hazardous waste management units addressed in this permit modification application will not generate or treat leachates; therefore, this section is not applicable.

C-3a(6) Lab Packs [40 CFR 270.14(b)(2), 264.13, 268.7(a)(7) through (9), 268.42(c), and Part 268 Appendix IV; AAC 335-14-8-.02(5)(b)2, 335-14-5-.02(4)(a) through (c), 335-14-9-.01(7) through (9), 335-14-9-.04(3), and 335-14-9 Appendix IV]

If lab packs are generated at the RSA-EDS site, process knowledge will be used to identify and complete LDR notifications prior to shipment offsite for treatment and/or disposal.

C-3a(7) Contaminated Debris [40 CFR 270.13(n), 268.2(g), 268.7, 268.9, 268.34, 268.36, and 268.45; AAC 335-14-8-.02(4)(n), 335-14-9-.01(2), 335-14-9-.01(7), 335-14-9-.01(9), 335-14-9-.03(15), 335-14-9-.03(17), and 335-14-9-.04(6)]

The EDS units will be processing recovered munitions and other items that contain chemical agent or industrial chemical fills. Hazardous waste debris will be generated and includes decontaminated metal parts and fragments/components, packing material, overpacks, PPE, and spent filters (prefilters, HEPA, and carbon). Hazardous waste debris will be containerized and shipped to a permitted TSDF for treatment to meet LDR requirements.

C-3a(8) Waste Mixtures and Wastes with Overlapping Requirements [40 CFR 270.14(b)(2), 264.13, 268.7, 268.9, 268.40(b), and 268.45(a); AAC 335-14-8-.02(5)(b)2, 335-14-5-.02(4)(a) through (c), 335-14-9-.01(7), 335-14-9-.01(9), 335-14-9-.04(1), and 335-14-9-.04(6)]

Tables C-1-2 and **C-2-1** detail the waste streams that the EDS units will be generating and treating, how those waste streams are identified, and what analyses will be performed. Land disposal will not take place at the RSA-EDS site. The waste streams will be characterized as detailed in **Table C-2-1** for shipment to treatment and ultimate disposal facilities.

C-3a(9) Dilution and Aggregation of Wastes [40 CFR 270.14(b)(2) and 268.3; AAC 335-14-8-.02(5)(b)2 and 335-14-9-.01(3)]

The EDS units will not treat waste by means of dilution. Neutralent, spent decontamination solution, and other liquid wastes will be aggregated in UN-rated containers that will be shipped to a permitted TSDF.

C-3b Notification, Certification, and Recordkeeping Requirements [40 CFR 270.14(b)(2), 264.73, 268.7, and 268.9(d); AAC 335-14-8-.02(5)(b)2, 335-14-5-.05(4), 335-14-9-.01(7), and 335-14-9-.01(9)]

C-3b(1) Retention of Generator Notices and Certifications [40 CFR 270.14(b)(2), 264.13, 264.73, 268.7, and 268.9(d); AAC 335-14-8-.02(5)(b)2, 335-14-5-.02(4)(a) through (c), 335-14-5-.05(4), 335-14-9-01(7), and 335-14-9-.01(9)]

Notices, certifications, demonstrations, analyses, and other documentation produced to support the determination for all regulated waste to be treated onsite, or generated and treated onsite or offsite, will be kept for a period of 3 years in the RSA-EDS site operating files.

C-3b(2) Notification and Certification Requirements for Treatment Facilities [40 CFR 270.14(b)(2), 264.13, and 268.7(d); AAC 335-14-8-.02(5)(b)2, 335-14-5-.02(4)(a) through (c), and 335-14-9-.01(7)]

For all EDS LDR wastes that will be sent off the RSA-EDS site for further management (treatment and/or disposal), notices and certifications, as applicable, will be made in writing and forwarded with the waste shipment to the receiving facility in accordance with the requirements of AAC 335-14-8-.02(5)(a), 335-14-5-.02(4), and 40 CFR 268.7(d).

C-3b(3) Notification and Certification Requirements for Land Disposal Facilities [40 CFR 270.14(b)(2), 264.13, and 268.7(c)(1); AAC 335-14-8-.02(5)(b)2, 335-14-5-.02(4)(a) through (c), and 335-14-9-.01(7)]

The hazardous waste management units addressed in this permit modification application are not land disposal facilities; therefore, this section is not applicable.

C-3b(4) Wastes Shipped to Subtitle C Facilities [40 CFR 270.14(b)(2), 264.13, 268.7(a) and (b), and 268.9(d); AAC 335-14-8-.02(5)(b)2, 335-14-5-.02(4)(a) through (c), 335-14-9-.01(7), and 335-14-9-.01(9)]

The RSA-EDS site operations will be shipping hazardous waste offsite for management in a Subtitle C facility. Notifications and certifications will be submitted in compliance with AAC 335-14-8-.02(5)(a), 335-14-9-.01(7), and 40 CFR 268.9(d).

Each first shipment of a waste stream will include a written notification and certification that the waste either meets or does not meet applicable treatment standards.

C-3b(5) Wastes Shipped to Subtitle D Facilities [40 CFR 270.14(b)(2), 264.13, 268.7(b), and 268.9(d); AAC 335-14-8-.02(5)(b)2, 335-14-5-.02(4)(a) through (c), 335-14-9-.01(7), and 335-14-9-.01(9)]

The EDS units will not be treating characteristic waste to remove the waste codes assigned in order to ship to a Subtitle D facility; therefore, this section is not applicable.

C-3b(6) Recyclable Materials [40 CFR 270.14(b)(2), 264.13, 266.20(b), and 268.7(b)(7); AAC 335-14-8-.02(5)(b)2, 335-14-5-.02(4)(a) through (c), 335-14-7-.03(1), and 335-14-9-.01(7)]

The EDS units will not be managing recyclable materials in a manner constituting disposal as described in AAC 335-14-8-.02(5)(a), 335-14-5-.02(4)(a) through (c), 335-14-9-.01(7), and 40 CFR 264.13 and 266.20(b); therefore, this section is not applicable.

C-3b(7) Recordkeeping [40 CFR 270.14(b)(2), 264.13, 264.73, 268.7(a)(5), 268.7(a)(6), 268.7(a)(7), 268.7(a)(8) and 268.7(d); AAC 335-14-8-.02(5)(b)2, 335-14-5-.02(4)(a) through (c), 335-14-5-.05(4), and 335-14-9-.01(7)]

Determinations of restricted wastes and documentation on where a restricted waste was treated, stored, and/or disposed of will be maintained in the RSA-EDS site operating records.

None of the generated wastes are expected to be excluded from regulatory requirements. If an unusual or out of the ordinary circumstance occurs and an exception is required, a one-time notice will be placed in the RSA-EDS site operating files detailing: (1) the basis for any waste excluded from the requirements of AAC 335-14-8-.02(5)(a), 335-14-5-.02(4), 335-14-5-.05(4), and 40 CFR 268.7(d); (2) the generation process; and (3) the basis for exclusion and disposition of the waste.

C-3c Requirements Pertaining to the Storage of Restricted Wastes [40 CFR 270.14(b)(2), 264.73, and 268.50; AAC 335-14-8-.02(5)(b)2, 335-14-5-.05(4), 335-14-9-.05(1)]

C-3c(1) Restricted Wastes Stored in Containers [40 CFR 270.14(b)(2), 264.73, and 268.50(a)(2)(i); AAC 335-14-8-.02(5)(b)2, 335-14-5-.05(4), and 335-14-9-.05(1)]

Wastes generated from EDS treatment operations and support activities will be stored 90 days or less. As applicable, each waste container will be marked with a description of its content and the start date of accumulation.

C-3c(2) Restricted Wastes Stored in Tanks [40 CFR 270.14(b)(2), 264.13(b)(6) and (7), 268.4, 268.5, 268.6, 268.14, 268.44, and 268.50(a)(2)(ii); AAC 335-14-8-.02(5)(b)2, 335-14-5-.02(4)(b)6 and 7, 335-14-9-.01(4), 335-14-9-.01(5), 335-14-9-.01(6), 335-14-9-.02(5), 335-14-9-.04(5), and 335-14-9-.05(1)]

The EDS units will not have tanks; therefore, this section is not applicable.

C-3c(3) Storage of Liquid Polychlorinated Biphenyl (PCB) Wastes [40 CFR 270.14(b)(2), 264.73, and 268.50(f); AAC 335-14-8-.02(5)(b)2, 335-14-5-.05(4), and 335-14-9-.05(1)]

The EDS units will not be storing liquid wastes containing PCBs; therefore, this section is not applicable.

C-3d Exemptions, Extensions, and Variances to Land Disposal Restrictions

[40 CFR 270.14(b)(2) and (21), 264.13(b)(6) and (7), 264.73, 268.4, 268.5, 268.6, 268.7, 268.14, 268.44, and 268.50(d); AAC 335-14-8-.02(5)(b)2 and 21, 335-14-5-.02(4)(b)6 and 7, 335-14-5-.05(4), 335-14-9-01(4), 335-14-9-.01(5), 335-14-9-.01(6), 335-14-9-.01(7), 335-14-9-.02(5), 335-14-9-.04(5), and 335-14-9-.05(1)]

The Army is not applying for any exemptions, extensions, or variances to the LDRs; therefore, this section is not applicable.

(This page intentionally left blank.)

ATTACHMENT C-1
CHEMICAL AND PHYSICAL PROPERTIES FOR CHEMICAL FILLS, ENERGETIC COMPOUNDS, AND REAGENTS

Safety Data Sheets for Potential Chemical Fills:

- Sulfur mustard (H/HD)
- Sulfur mustard and Bis(2-(2-chloroethylthio)ethyl) ether (HT)
- Nitrogen mustard (HN-3)
- Phosgene (CG)
- Lewisite (L)
- Diphenylchloroarsine (DA)
- Phenyldichloroarsine (PD)
- Chloroacetophenone/carbon tetrachloride/benzene mixture (CNB)
- Chloroacetophenone/chloropicrin/chloroform mixture (CNS)
- Titanium tetrachloride (FM smoke)
- Chlorosulfonic acid (FS smoke)
- Sulfur trioxide (FS smoke component)

Safety Data Sheets for Energetic Compounds:

- 2,4,6 Trinitrophenylmethylnitramine (Tetryl)
- Trinitrotoluene (TNT)

Safety Data Sheets for Treatment Reagents:

- Monoethanolamine (MEA)
- Sodium hydroxide (NaOH)
- Sodium permanganate ($NaMnO_4$)
- Propylene Glycol

(This page intentionally left blank.)

Table Attachment C-1-1. Types of Potential Chemical Fills to Be Managed at the RSA EDS

Potential Chemical Fill	Chemical Formula	Effects
Sulfur Mustard (H)	$C_4H_8Cl_2S$	H is a blister agent that produces cytotoxic action on hematopoietic (blood-forming) tissues; the rate of detoxification is very slow and repeated exposures produce a cumulative effect. Mustard agent has been found to be a human carcinogen.
Nitrogen Mustard (HN-3)	$C_6H_{12}Cl_3N$	HN-3 is a blister agent that produces eye injury and damage to the respiratory tract. Cytotoxic effects follow absorption through the intact skin, respiratory, and gastrointestinal tracts. The hematopoietic and lymphoid tissues are especially sensitive.
Phosgene (CG)	$COCl_2$	CG is a choking agent classified as an industrial chemical. CG is a highly volatile, reactive substance that affects the respiratory tract.
Lewisite (L)	$C_2H_2AsCl_3$	L is an arsenical vesicant. It is more volatile than mustard and is more dangerous as a liquid than as a vapor. The effects of L exposure are similar to mustard, except that pain is immediate.
Diphenylchloroarsine (DA)	$C_{12}H_{10}AsCl$	DA is a vomiting agent. Within 2 to 3 minutes after exposure, it causes irritation of the eyes and mucous membranes, viscous discharge from the nose similar to that caused by a cold, sneezing and coughing, severe headache, acute pain and tightness in the chest, and nausea and vomiting. For moderate concentrations, the effects last about 30 minutes after the individual leaves the contaminated area; at higher concentrations, the effects may last up to several hours.
Phenyldichloroarsine (PD)	$C_6H_5AsCl_2$	PD is classified as a blister agent, but it also acts as a vomiting agent. It is a colorless liquid. PD has an immediate effect on eyes and a delayed effect of 30 minutes to 1 hour on skin. PD blisters bare skin, but wet clothing decomposes it immediately.
Carbon Tetrachloride + Chloroacetophenone + Benzene (CNB)	Chloroacetophenone: $C_6H_5COCH_2Cl$ Carbon Tetrachloride: CCl_4 Benzene: C_6H_6	CNB is a tear agent. It is a slightly brown, flammable liquid that has an immediate, strongly irritating effect on the eyes, respiratory tract, and skin. Following heavy exposures, nausea and vomiting may occur. CNB can form lethal concentrations in closed or confined spaces.
Chloroacetophenone + Chloropicrin + Chloroform (CNS)	Chloroacetophenone: $C_6H_5COCH_2Cl$ Chloropicrin: $C(NO_2)C1_3$ Chloroform: $CHC1_3$	CNS is a tear and vomiting agent. It is a clear liquid that has an immediately strong irritating effect on the eyes and respiratory tract. CNS causes severe nausea. If inhaled for longer periods, vomiting, colic (severe abdominal pains and cramps), and diarrhea can occur.

Table Attachment C-1-1. Types of Potential Chemical Fills to Be Managed at the RSA EDS (Continued)

Chemical Fill	Chemical Formula	Effects
Titanium tetrachloride (FM Smoke)	$TiCl_4$	FM is a corrosive liquid that decomposes on contact with moist air, yielding a dense white smoke. Liquid FM produces acid burns of the skin or eyes. Exposure of the eyes to the spray will cause conjunctivitis with lacrimation and photophobia.
Sulfur trioxide + chlorosulfonic acid (FS Smoke)	$ClSO_3H$	FS is a strongly acid liquid that, when dispersed in the air, absorbs moisture to form a dense white fog consisting of small droplets of hydrochloric and sulfuric acids. In moderate concentrations, it is highly irritating to the eyes, nose, and skin. Local inflammation of the eyes, respiratory tract, and skin may be seen after severe exposures to the smoke. Contact with liquid FS produces acid burns and severe eye injury.

Source: FM 4-02.285 (FM 8-285), *Multiservice Tactics, Techniques, and Procedures for Treatment of Chemical Agent Casualties and Conventional Military Chemical Injuries*, Headquarters, Department of the Army, September 2007.

Safety Data Sheet

Distilled Mustard (HD)

Section I – Identification

Manufacturer's Address:
U.S. Army Edgewood Chemical Biological Center (ECBC)
ATTN: RDCB-DPC-RH
Aberdeen Proving Ground, MD 21010-5424
Business Phone: 410-436-4411 or 4414, Monday through Friday during the hours of 8:00 AM to 4:30 PM EDT
Emergency Phone/RDECOM Operations Center: 410-278-9131

Chemical Name: Bis- (2-chloroethyl) sulfide

Trade name and synonyms:
H; HD; HS
Mustard Gas
Sulfur mustard; Sulphur mustard gas
Sulfide, bis (2-chloroethyl)
Bis (beta-chloroethyl) sulfide
1,1'-thiobis(2-chloroethane)
1-chloro-2 (beta-chloroethylthio) ethane
Beta, beta'-dichlorodiethyl sulfide
2,2'dichlorodiethyl sulfide
Di-2-chloroethyl sulfideBeta, beta'-dichloroethyl sulfide
2,2'-dichloroethyl sulfide
EA 1033
Iprit
Kampstoff "Lost"; Lost
S-Lost; S-yperite; Schewefel-lost
Senfgas
Yellow Cross Liquid
Yperite;Y

Chemical Family: Chlorinated sulfur compound

Molecular Formula and Structural Formula:

$C_4 H_8 Cl_2 S$

$C1CH_2CH_2SCH_2CH_2Cl$

Recommended Use and Restrictions on Use: Laboratory Chemicals

Section II – Hazard(s) Identification

Hazard Classification:
Acute Toxicity, Category 1 (Dermal, Inhalation)

Germ Cell Mutagenicity, Category 2
Carcinogenicity, Category 1A
Eye Damage/Irritation, Category 1

Signal Word: Danger

Hazard Statements(s):
Fatal in contact with skin
Fatal if inhaled
Suspected of causing genetic defects
May cause cancer
Causes serious eye damage

Pictograms:

Precautionary Statements:

- Do not get in eyes, on skin, or on clothing.
- Wash hands thoroughly after handling.
- Do not eat, drink or smoke when using this product.
- Wear protective gloves/protective clothing/eye protection/face protection.
- If on skin: Wash with plenty of personnel decontaminant
- If in eyes: Rinse cautiously with water for several minutes. Remove contact lenses, if present and easy to do. Continue rinsing.
- Immediately call 911.
- Take off immediately all contaminated clothing and wash it before reuse.
- Store locked up.
- Dispose of contents/container in accordance with federal, state, and local laws.
- Do not breathe dust/fume/gas/mist/vapors/spray.
- In case of inadequate engineering controls, wear respiratory protection.
- If inhaled: Remove person to fresh air and keep comfortable for breathing.
- Specific treatment is urgent (see Section IV).
- Store in a well-ventilated place. Keep container tightly closed.
- Obtain Special instructions before use.
- Do not handle until all safety precautions have been read and understood.
- If exposed or concerned: Get medical advice/attention.

Description of any hazards not otherwise classified: No applicable information was found.

Section III - Composition/information on ingredients

Ingredients/Name: Sulfur Mustard
CAS Registry Numbers: 505-60-2
Percentage by Weight: 100%

Section IV – First-aid Measures

NOTE: Prior to rendering first aid, take steps for self protection such as donning a protective mask and other

protective equipment. Decontaminate the individual as indicated below.

Vapor Exposure: Immediately don a protective mask. Move to a clean air environment and decontaminate by removing all clothing and shampooing or rinsing the hair to prevent vapor off gassing.

Liquid Skin Exposure: Move away from the area of contamination and don a protective mask. Immediately remove all contaminated clothing and spot decontaminate the affected area of the skin with Reactive Skin Decontamination Lotion (RSDL) for at least a two-minute contact time, followed by a soap-and-water wash or shower. This is the preferred skin decontaminant for immediate spot decontamination. Two permissible alternative skin decontaminants include a) soap and water and b) 0.5% sodium hypochlorite solution. (NOTE: RSDL has been shown to be superior across the broad spectrum of agents to both soap and water and also to 0.5% sodium hypochlorite solutions. Do not use 0.5% sodium hypochlorite solution to rinse off RSDL, or in any combination with the lotion; this can lead to skin irritation and inflammation that may increase the absorbed dose of agent. RSDL is FDA-approved only for initial spot decontamination, not for full body decontamination. RSDL is also approved only for use on intact skin, not on wounds, eyes, or mucous membranes. For rinsing the eyes, mucous membranes, or open wounds, use water or saline only.)

Full-body decontamination should be performed with soap and water. Wash the skin surface and hair in warm or tepid water at least three times. The rapid physical removal of a chemical agent is essential. Scrubbing of exposed skin with a stiff brush or bristles is discouraged, because skin damage may occur and may increase absorption of agent. Use liquid soap (discard and replace the soap container after use), copious amounts of water, and mild to moderate friction with a single-use sponge or washcloth in the first and second washes. The third wash should be a rinse with copious amounts of warm or tepid water. Shampoo can be used to wash the hair. If tepid water is not available, but cold water is, use cold water. Do not delay decontamination to obtain tepid or warm water.

If 0.5% sodium hypochlorite solution is used on skin instead of soap and water, it should also be applied with mild to moderate friction, with a single-use sponge or washcloth in the first and second applications. The third wash should be a rinse with copious amounts of warm or tepid water.

Eye Contact: Immediately move away from the area of contamination and begin flushing eyes, mucous membranes, or open wounds with sterile saline or water. Flush the eyes immediately with sterile saline or water by tilting the head to the side, pulling the eyelids apart with gloved fingers and pouring slowly into the eyes. A Morgan lens may also be used for continuous eye irrigation. Transfer the patient to a medical facility **Immediately.**

Ingestion: Do not induce vomiting. First symptoms are likely to be gastrointestinal. Seek medical attention **Immediately. Do not handle vomited material to avoid further contamination.**

Inhalation: If breathing is difficult, administer oxygen. If breathing has stopped and there is no pulse, begin CPR while awaiting EMS response. Because of the potential of rescuer exposure to facial contamination or to agent in expired air, avoid mouth-to-mouth resuscitation. Dial 911 to request immediate transport of the individual to a medical treatment facility for evaluation and treatment.

NOTE: The U.S. Army Public Health Command is responsible the medical guidance provided in this SDS. Questions concerning medical guidance provided in the this SDS may be addressed to USAPHC, ATTN: Program 66/Surety Medicine, 5158 Blackhawk Road, Bldg E-1570, Aberdeen Proving Ground, Maryland 21010-5403

Section V - Fire-fighting measures

Extinguishing Media: Water, fog, foam and CO_2. Avoid use of extinguishing methods that will cause splashing or spreading of HD.

Special Fire Fighting Procedures: All persons not engaged in extinguishing the fire should be immediately evacuated from the area. Fires involving HD should be contained to prevent contamination to uncontrolled areas.

When responding to a fire alarm in buildings or areas containing agents, fire-fighting personnel should wear full firefighter protective clothing (flame resistant) during chemical agent fire-fighting and fire rescue operations. Respiratory protection is required. Positive pressure, full facepiece, NIOSH-approved self-contained breathing apparatus (SCBA) will be worn where there is danger of oxygen deficiency and when directed by the fire chief or chemical accident/incident (CAI) operations officer. In cases where fire fighters are responding to a chemical accident/incident for rescue/reconnaissance purposes they will wear appropriate levels of protective clothing (See Section VIII).

Do not breathe fumes. Skin contact with agent must be avoided at all times. Although the fire may destroy most of the agent, care must still betaken to assure the agent or contaminated liquids do not further contaminate other areas or sewers. Contact with the agent liquid or vapor can be fatal.

Unusual Fire and Explosion Hazards: None

NFPA 704 Signal:

Health - 4
Flammability - 1
Reactivity - 1
Special - 0

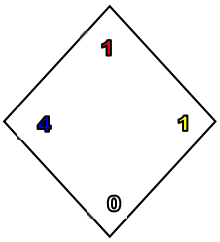

Section VI - Accidental release measures

Steps to Be Taken In Case Material Is Released or Spilled: Only personnel in full protective clothing (See Section VIII) will be allowed in an area where HD is spilled. In case of personnel contamination see Section IV for emergency and first aid instructions. See Section XIII for additional spill control and waste disposal methods.

Section VII - Handling and storage

Precautions to Be Taken in Handling and Storing: When handling agents, the buddy system will be incorporated. No smoking, eating, or drinking in areas containing agents is permitted. Containers should be periodically inspected for leaks, (either visually or using a detector kit). Stringent control over all personnel practices must be exercised. Decontaminating equipment will be conveniently located. Exits must be designed to permit rapid evacuation. Chemical showers, eyewash stations, and personal cleanliness facilities must be provided. Wash hands before meals and, as appropriate, shower thoroughly with special attention given to hair, face, neck, and hands using plenty of soap and water before leaving at the end of the workday.

Other Precautions: HD should be stored in containers made of glass for Research, Development, Test and Evaluation (RDTE) quantities or one-ton steel containers for large quantities. Agent containers will be stored in a single containment system with in a laboratory hood or in double containment system.

For additional information see "AR 385-10, The Army Safety Program," "DA Pam 385-61, Toxic Chemical Agent Safety Standards," and "DA Pam 40-173, Occupational Health Guidelines for the Evaluation and Control of Occupational Exposure to Mustard Agents H, HD, and HT".

Section VIII - Exposure control/personal protection

Exposure Limits for Respiratory Protection for HD:

Unprotected Workers:

Concentration (mg/m^3)	Time Limits
Less than or equal to 0.0004[1]	8 hours
Up to or less than 0.0016	2 hours[2]

Protected Workers:

Type of Respiratory Protection Worn (based on air monitoring results):

1. M40 Military Mask, CBRN NIOSH Approved Full Face Air Purifying Respirator

Concentration (mg/m^3)	Time Limits
$\leq$ 0.003	Time limit will be kept at a minimum to perform the operation, and will be dictated by the local Heat Stress Program for personal protective equipment and clothing[3]

2. Pressure Demand Supplied Air Respirator with Full Face Respirator

Concentration (mg/m^3)	Time Limits[4]
0.0004 to 0.7[5]	Time limit will be kept at a minimum to perform the operation, and will be dictated by the local Heat Stress Program for personal protective equipment and clothing.

3. Pressure Demand Supplied Air Respirator with Full Face Respirator in combination with an Auxiliary Self-contained Breathing Apparatus (SCBA) or just SCBA

Concentration (mg/m3)	Time Limits[4]
Greater than 0.7	These concentrations should be expected only in emergency situations. Operations should not be conducted at these concentrations.

---

[1] As an 8-hr TWA average.
[2] Maximum continuous time at this concentration. Equivalent to 8-hr TWA. Source: DA, Pamphlet 385-61, Toxic Chemical Agent Safety Standards, 13 November 2012.
[3] The M40 mask may be used for escape from environments containing concentrations above the STEL. The M40 mask may used for routine entry with real-time monitoring for the STEL and historical monitoring for the WPL. The M40 mask will not be used for routine protection above the STEL or in the absence of WPL monitoring.
[4] For SCBA wearers, time limit is constrained by life of the air cylinder (maximum of 30 to 45 minutes). For Air Supply wearers, time limits should be kept to a minimum. Should use of the auxiliary SCBA be necessary, time limit will be constrained by the life of the breathing air cylinder, and egress from the area must be performed before its expiration.
[5] The Immediately Dangerous to Life and Health Value.

Ventilation

Local Exhaust: Mandatory. Must be filtered or scrubbed to limit exit concentrations. Air emissions shall meet local, state and federal regulations.

Special: Chemical laboratory hoods will have an average inward face velocity of 100 linear feet per minute (lfpm)

+/- 20% with the velocity at any point not deviating from the average face velocity by more than 20%. Existing laboratory hoods will have an inward face velocity of 150 lfpm +/- 20%. Laboratory hoods will be located such that cross drafts do not exceed 20% of the inward face velocity. A visual performance test using smoke producing devices will be performed in assessing the ability of the hood to contain agent HD.

Other: Recirculation of exhaust air from agent areas is prohibited. No connection between agent area and other areas through the ventilation system is permitted. Emergency backup power is necessary. Hoods should be tested semiannually or after modification or maintenance operations. Operations should be performed 20 centimeters inside hoods.

Protective Gloves: Butyl Rubber gloves M3 and M4
Norton, Chemical Protective Glove Set

Eye Protection: As a minimum, safety glasses with side shields will be worn. For splash hazards use goggles and face shield. Maintain eyewash facilities in work area.

Other Protective Equipment: For laboratory operations, wear lab coats, gloves and have mask readily accessible. In addition, daily clean smocks, foot covers, and head covers will be required when handling contaminated lab animals. In the case of a spill, the minimum protective clothing should be Level B after the site has been evaluated, otherwise Level A.

Monitoring: Available monitoring equipment for agent HD is the M8/M9 detector paper, blue band tube, M256/M256A1 kits, bubbler, Depot Area Air Monitoring System (DAAMS), Automated Continuous Air Monitoring System (ACAMS), CAM-M1, Hydrogen Flame Photometric Emission Detector (HYFED), the Miniature Chemical Agent Monitor (MINICAM), and Real Time Analytical Platform (RTAP). Real-time, low-level monitors (with alarm) are required for HD operations. In their absence, an Immediately Dangerous to Life and Health (IDLH) atmosphere must be presumed. Laboratory operations conducted in appropriately maintained and alarmed engineering controls require only periodic low-level monitoring.

Section IX - Physical and Chemical Properties

Boiling Point: 218 ºC (424.4 ºF); at atmospheric pressure HD starts to decompose below the boiling point.

Vapor Pressure (torr): 0.106 @ 25 ºC

Vapor Density (relative to air): 5.5

Solubility: HD is practically insoluble in water; solubility of HD in distilled water is 0.92 g HD/100 g @ 22 ºC. HD is freely soluble in fats and oils, gasoline, kerosene, most organic solvents and chemical warfare agents.

Specific Gravity (H_20=1): 1.27 @ 25 ºC

Freezing/Melting Point (ºC): 14.45 ºC

Liquid Density (g/mL): 1.2685 g/mL @ 25 ºC

Volatility (mg/m^3): 906 @ 25 ºC

Viscosity (Centipoise): 5.175 @ 20 ºC

Molecular Weight: 159.07

Appearance and Odor: Pale yellow to dark brown oily liquid; colorless when pure. Garlic-like or horseradish

odor.

Odor threshold: Not available

Flashpoint: 105 ºC

Flammability Limits (% by volume): Not Available

Lower Explosive Limit: Not Available

Upper Explosive Limit: Not Available

Autoignition Temperature: Not Available

Decomposition Temperature: 180 ºC

pH: Not Available

Initial boiling point and boiling range: Not Available

Evaporation rate: Not Available

Partition coefficient: n-octanol/water: Not Available

Section X - Stability and Reactivity

Stability: A small amount of degradation occurs when stored in steel containers for over 50 years. This degradation appears to be caused by the formation of solid deposits "heels" comprised of a six membered ring cyclic sulfonium ion {1-(2-chloroethyl)-1, 4-dithianium chloride}, HD and Fe, which are detected at the bottom of containers.

Rate of Hydrolysis: HD on or under water undergoes hydrolysis only if dissolved. The rate of HD hydrolysis is controlled by the rate of mass transfer and is very slow.

Hydrolysis Products: Hydrogen chloride, thiodiglycol and sulfonium ion aggregates one of which is also very toxic.

Action on Metals and Other Materials: Very little when pure. The corrosion rate of HD on steel is 0.0001 in./month @ 65 ºC using munitions grade HD.

Hazardous Polymerization: Does not occur.

Section XI - Toxicological Information

Airborne Exposure Limits (AEL) [2]:

Worker Population Limit (WPL) 8-hr TWA [1] mg/m^3	STEL 15-min TWA [1] mg/m^3	IDLH [1] mg/m^3	General Population Limit (GPL) 12-hr TWA [1] mg/m^3
0.0004	0.003	0.7	0.00002

[1] These values can be found in the DA, Pamphlet 385-61, Toxic Chemical Agent Safety Standards, 13 November 2012.
[2] To date, the Occupational Safety and Health Administration (OSHA) have not promulgated a permissible exposure concentration for HD.

Routes of Entry: The routes of entry for mustard agents are inhalation and ingestion, as well as eye and skin contact.

Effects of Exposure: HD is a vesicant (causing blisters) and alkylating agent producing cytotoxic action on the hematopoietic (blood-forming) tissues, which are especially sensitive. The rate of detoxification of HD in the body is very slow and repeated exposures produce a cumulative effect.

HD is a human carcinogen as cited by the International Agency for Research on Cancer (IARC). HD has also been shown to be mutagenic in animals.

Signs and Symptoms: The acute signs and symptoms following mustard exposure are not immediate; they are delayed in appearance. The duration of the latent period and the degree of injury are both dependent on the severity of exposure as well as organs affected. The delay of onset is dose-dependent and may range from hours to days. The latency period for ocular (eye) effects is shorter than that for other tissues.

Mild eye exposure symptoms to mustard include inflammation, conjunctivitis possibly with lacrimation, grittiness in the eye, and erythema (reddening) of the lids and conjunctiva. Severe symptoms include photophobia, blepharospasm, pain, corneal erosion, iritis, conjunctival vascularization, ulceration and corneal opacification (blindness).

Skin exposure to mustard vapor is marked by delayed appearance. Mild symptoms include erythema, edema, itching, burning and pain. Severe symptoms include vesication or blisters. Liquid mustard exposure on skin may result in an area of gray-white necrotic skin surrounded by erythema and vesication.

Inhalation of mustard vapor causes damage primarily to the nasopharygeal, larygeal and tracheobronchial mucosa. Respiratory symptoms to mustard vapor vary in degree of onset and intensity related to the degree of exposure. Mild symptoms to the airway include hoarseness, inflammation of the respiratory mucosa, congestion, coughing and edema. Severe symptoms include necrosis, sloughing of the mucosa and chemical pneumonia. Repeated exposures or prolonged inhalation can cause bronchiectasis or chronic bronchitis.

Gastrointestinal symptoms of intense mustard exposure include nausea and vomiting.

Like other alkylating agents, systemic absorption results in injury to the bone marrow, lymph nodes, and spleen producing leukopenia and thrombocytopenia. Other systemic effects include: fever; CNS depression; bradycardia or cardiac irregularities; hemoconcentration; and shock.

Chronic Exposure: Chronic mustard-induced illnesses are most common in the eyes, skin, respiratory tract or bone marrow. Delayed, recurrent keratoconjunctivitis of the eyes has been documented in some cases as long as 45 years from original exposure. Healing of mustard blisters may result in skin exfoliation and areas of hypo- or hyperpigmentation. Exposure can cause chronic lung impairment (productive cough, shortness of breath, chest pain, frequent pulmonary infections and bronchitis). Prolonged human exposure has been associated with cancer of the tongue, paranasal sinus, larynx, bronchus, lung, and mediastinum (cavity between the right and left lung). Tumors observed have been of squamous (scale like) or undifferentiated (alterated) cell types. Consider the possibility of skin cancer because of the frequency of this lesion in animal studies. Since sulfur mustard agent is similar in its effects to nitrogen mustard, which has been associated with human leukemia, this disease might also be expected to occur in humans chronically exposed to mustard.

Toxicity Estimates:

Vapor (Inhalation/Ocular) [1]
ECt50 (Mild) = 25 mg-min/m^3
ECt50 (Severe) [2] = 75 mg-min/m^3 {3}
LCt50 = 1000 mg-min/m^3

Vapor (Percutaneous) [4,5]
ECt50 (Mild) = 50 mg-min/m^3
ECt50 (Severe) [2] = 500 mg-min/m^3
LCt50 = 10000 mg-min/m^3

Liquid (Percutaneous)
ED50 (Severe) = 600 mg/70 kg man
LD50 = 1400 mg/70 kg man

---

[1] Estimates for inhalation vapor exposure are based on a minute volume (MV) of 15 liters. The exposure time is 2 minutes. The concentration-time profile for lethality is described by the toxic load model ($C^n t=k$). The toxic load exponent (n) for lethality is 1.5.
[2] Based on ocular (eye) effects.
[3] FM 3-11.9, Potential Military Chemical/Biological Agents and Compounds, 10 January 2005.
[4] Personnel are masked.
[5] Values for percutaneous vapor are for moderate temperatures (85 ^oF and below). The effective dosages for hot temperatures (85 ^oF and above) will be less by at least a factor of 2.

Section XII - Ecological information

Persistence and degradability: Not Available

Bioaccumulative potential: Not Available

Mobility in soil: Not Available

Results of PBT and vPvB assessment: Not Available

Other adverse effects: Not Available

Section XIII - Disposal considerations

Recommended Field Procedures: The HD should be contained using vermiculite, diatomaceous earth, clay or fine sand and neutralized as soon as possible using copious amounts of nominal 5% sodium hypochlorite solution. Scoop up all material and place in an approved DOT container. Cover the contents with decontaminating solution as above. The exterior of the container will be decontaminated and labeled according to EPA and DOT regulations. All leaking containers will be over packed with sorbent (e.g. vermiculite) placed between the interior and exterior containers. Decontaminate and label according to EPA and DOT regulations. Dispose of the material in accordance with waste disposal methods provided below. Conduct general area monitoring with an approved monitor to confirm that the atmospheric concentrations do not exceed the STEL (See Sections XI and VIII).

If 5% sodium hypochlorite solution is not available then the following decontaminants may be used instead and are listed in the order of preference: **Calcium Hypochlorite and Super Tropical Bleach Slurry (STB).

****WARNING:** DO NOT USE PURE SOLID, UNDILUTED CALCIUM HYPOCHLORITE (HTH); it will COMBUST UPON CONTACT with liquid mustard.

Leaking munitions should be processed in accordance with established chemical demilitarization SOPs, see "DA Pam 385-61, Toxic Chemical Agent Safety Standards".

Recommended Laboratory Procedures: Use a minimum of 65 grams of 5.25% bleach decontamination solution for each gram of HD. Agitate for at least the first hour, and allow 24 hours for the reaction to complete. Adjust the resulting solution pH to between 10 and 12.

Test for presence of active chorine by use of acidic potassium iodide solution to give free iodine color by placing three millileters (ml) of decontaminated solution in a test tube. Add several crystals of potassium iodine and swirl to dissolve. Add 3 ml of 50 wt.% sulfuric acid: water and swirl. Immediate iodine color shows the presence of active chlorine. If negative, add additional bleach to the decontaminated solution, wait two hours and test again for active chlorine.

10% HTH may also be used to decontaminate HD. Follow all steps given above.

Scoop up all materials and clothing and place in an approved DOT container. The exterior of the container will be decontaminated and labeled according to EPA and DOT regulations. All leaking containers will be over packed with sorbent (e.g. vermiculite) placed between the interior and exterior containers. Decontaminate and label according to EPA and DOT regulations. Dispose of contents according to Federal, state and local regulations. Conduct general area monitoring with an approved monitor to confirm that the atmospheric concentrations do not exceed the STEL (See Sections XI and VIII).

NOTE: Surfaces contaminated with HD, then rinsed and decontaminated may evolve sufficient HD vapor to produce a physiological response. HD on laboratory glassware may be oxidized by its vigorous reaction with concentrated nitric acid.

Waste Disposal Method: Open pit burning or burying of HD or items containing or contaminated with HD in any quantity is prohibited. Waste HD and associated decontamination solutions may be Resource Conservation and Recovery Act (RCRA) regulated hazardous wastes due to a State listing of the chemical agent, or the characteristics of the waste, to include contaminates. An evaluation of the Federal and State waste disposal regulations must be conducted to determine the appropriate disposal method.

Section XIV - Transport information

NOTE: Forbidden for transport other than via military (Technical Escort Unit) transport according to 49 CFR Part 173.7(b), DOD 4500.9-R and AR 50-6.

Proper Shipping Name: Toxic by inhalation liquid, n.o.s. (Bis- (2-chloroethyl) sulfide)

UN ID Number: UN3381

DOT Hazard Class: 6.1, Packing Group I, Inhalation Hazard Zone A

DOT Label: Poison Inhalation Hazard or Toxic Inhalation Hazard. See 49 CFR 172.400a(a)(3) for exceptions to unit packaging labeling and 173.7(b) for other exceptions when material is transported by Technical Escort Units.

NOTE: “Poison” and “Toxic” are used interchangeably for all markings, labels and placards in continental US transportation. “Toxic” is required for international transportation.

DOT Marking: Toxic by inhalation liquid, n.o.s. (Bis- (2-chloroethyl) sulfide) UN3381, Inhalation Hazard Zone A

DOT Placard: Poison Inhalation Hazard or Toxic Inhalation Hazard

Emergency Accident Precautions And Procedures: See Sections V, VI, VIII, and XIII.

Precautions To Be Taken In Transportation: Motor vehicles will be placarded regardless of quantity. Drivers will be given full information regarding shipment and conditions in case of an emergency. AR 50-6 deals specifically with the shipment of chemical agents.

Section XV - Regulatory information

No applicable information was found.

Section XVI - Other information

Preparation Information:
U.S. Army Edgewood Chemical Biological Center (ECBC)
ATTN: RDCB-DPC-RH
Aberdeen Proving Ground, MD 21010-5424
Business Phone: 410-436-4411 or 4414, Monday through Friday during the hours of 8:00 AM to 4:30 PM EDT

Revised: 29 May 2015

The Edgewood Chemical Biological Center (ECBC), Department of the Army believes that the data contained herein are actual and are the results of the tests conducted by ECBC experts. The data is not to be taken as a warranty or representation for which the Department of the Army or ECBC assumes legal responsibility. This information is offered solely for consideration. Any use of this data and information contained in this SDS must be determined by the user to be in accordance with applicable Federal, State, and local laws and regulations.

(This page intentionally left blank.)

Safety Data Sheet

Poison (HT)

Section I – Identification

Manufacturer's Address:
U.S. Army Edgewood Chemical Biological Center (ECBC)
ATTN: RDCB-DPC-RH
Aberdeen Proving Ground, MD 21010-5424
Business Phone: 410-436-4411 or 4414, Monday through Friday during the hours of 8:00 AM to 4:30 PM EDT
Emergency Phone/RDECOM Operations Center: 410-278-9131

Chemical Name: Mixture of Bis(2-chloroethyl) sulfide (HD) and Bis(2-(2-chloroethylthio)ethyl) ether (T)

Trade Name and Synonyms:
HT

Chemical Family: Chlorinated sulfur compound

Molecular Formula and Chemical Structure: Mixture of 60% Sulfur Mustard (HD) and 40% Mustard -T (T) and other impurities

HD: $C_4H_8Cl_2S$
T: $C_8H_{16}Cl_2OS_2$

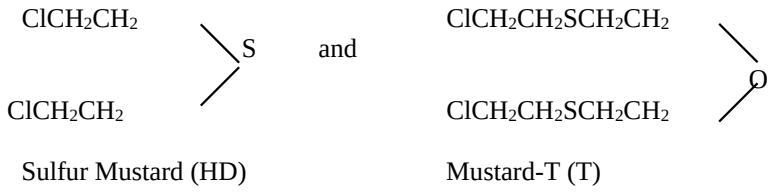

Recommended Use and Restrictions on Use: Laboratory Chemicals

Section II – Hazard(s) Identification

Hazard Classification:
Acute Toxicity, Category 1 (Dermal, Inhalation)
Germ Cell Mutagenicity, Category 2
Carcinogenicity, Category 1A
Eye Damage/Irritation, Category 1

Signal Word: Danger

Hazard Statements(s):
Fatal in contact with skin
Fatal if inhaled
Suspected of causing genetic defects
May cause cancer

Causes serious eye damage

Pictograms:

Precautionary Statements:

- Do not get in eyes, on skin, or on clothing.
- Wash hands thoroughly after handling.
- Do not eat, drink or smoke when using this product.
- Wear protective gloves/protective clothing/eye protection/face protection.
- If on skin: Wash with plenty of personnel decontaminant
- If in eyes: Rinse cautiously with water for several minutes. Remove contact lenses, if present and easy to do. Continue rinsing.
- Immediately call 911.
- Take off immediately all contaminated clothing and wash it before reuse.
- Store locked up.
- Dispose of contents/container in accordance with federal, state, and local laws.
- Do not breathe dust/fume/gas/mist/vapors/spray.
- In case of inadequate engineering controls, wear respiratory protection.
- If inhaled: Remove person to fresh air and keep comfortable for breathing.
- Specific treatment is urgent (see Section IV).
- Store in a well-ventilated place. Keep container tightly closed.
- Obtain Special instructions before use.
- Do not handle until all safety precautions have been read and understood.
- If exposed or concerned: Get medical advice/attention.

Description of any hazards not otherwise classified: No applicable information was found.

Section III - Composition/information on ingredients

Ingredients/Name: Sulfur Mustard & Mustard-T, HT
CAS Registry Numbers: Not Available
Percentage by Weight: Sulfur Mustard (HD) 60% and Mustard-T (T) with impurities 40%

Section IV – First-aid Measures

NOTE: Prior to rendering first aid, take steps for self protection such as donning a protective mask and other protective equipment. Decontaminate the individual as indicated below.

Vapor Exposure: Immediately don a protective mask. Move to a clean air environment and decontaminate by removing all clothing and shampooing or rinsing the hair to prevent vapor off gassing.

Liquid Skin Exposure: Move away from the area of contamination and don a protective mask. Immediately remove all contaminated clothing and spot decontaminate the affected area of the skin with Reactive Skin Decontamination Lotion (RSDL) for at least a two-minute contact time, followed by a soap-and-water wash or shower. This is the preferred skin decontaminant for immediate spot decontamination. Two permissible alternative

skin decontaminants include a) soap and water and b) 0.5% sodium hypochlorite solution. (NOTE: RSDL has been shown to be superior across the broad spectrum of agents to both soap and water and also to 0.5% sodium hypochlorite solutions. Do not use 0.5% sodium hypochlorite solution to rinse off RSDL, or in any combination with the lotion; this can lead to skin irritation and inflammation that may increase the absorbed dose of agent. RSDL is FDA-approved only for initial spot decontamination, not for full body decontamination. RSDL is also approved only for use on intact skin, not on wounds, eyes, or mucous membranes. For rinsing the eyes, mucous membranes, or open wounds, use water or saline only.)

Full-body decontamination should be performed with soap and water. Wash the skin surface and hair in warm or tepid water at least three times. The rapid physical removal of a chemical agent is essential. Scrubbing of exposed skin with a stiff brush or bristles is discouraged, because skin damage may occur and may increase absorption of agent. Use liquid soap (discard and replace the soap container after use), copious amounts of water, and mild to moderate friction with a single-use sponge or washcloth in the first and second washes. The third wash should be a rinse with copious amounts of warm or tepid water. Shampoo can be used to wash the hair. If tepid water is not available, but cold water is, use cold water. Do not delay decontamination to obtain tepid or warm water.

If 0.5% sodium hypochlorite solution is used on skin instead of soap and water, it should also be applied with mild to moderate friction, with a single-use sponge or washcloth in the first and second applications. The third wash should be a rinse with copious amounts of warm or tepid water.

Eye Contact: Immediately move away from the area of contamination and begin flushing eyes, mucous membranes, or open wounds with sterile saline or water. Flush the eyes immediately with sterile saline or water by tilting the head to the side, pulling the eyelids apart with gloved fingers and pouring slowly into the eyes. A Morgan lens may also be used for continuous eye irrigation. Transfer the patient to a medical facility **Immediately.**

Ingestion: Do not induce vomiting. First symptoms are likely to be gastrointestinal. Seek medical attention **Immediately. Do not handle vomited material to avoid further contamination.**

Inhalation: If breathing is difficult, administer oxygen. If breathing has stopped and there is no pulse, begin CPR while awaiting EMS response. Because of the potential of rescuer exposure to facial contamination or to agent in expired air, avoid mouth-to-mouth resuscitation. Dial 911 to request immediate transport of the individual to a medical treatment facility for evaluation and treatment.

NOTE: The U.S. Army Public Health Command is responsible the medical guidance provided in this SDS. Questions concerning medical guidance provided in the this SDS may be addressed to USAPHC, ATTN: Program 66/Surety Medicine, 5158 Blackhawk Road, Bldg E-1570, Aberdeen Proving Ground, Maryland 21010-5403.

Section V - Fire-fighting measures

Extinguishing Media: Water, fog, foam and CO_2. Avoid use of extinguishing methods that will splash or spread HT.

Unusual Fire & Explosion Hazards: Toxic fumes of hydrogen chloride and sulfur oxides may be produced in a fire. Vapors of unburned agent will exhibit toxic and vesicant effects.

Special Fire Fighting Procedures: All persons not engaged in extinguishing the fire should be immediately evacuated from the area. Fires involving HT should be contained to prevent contamination to uncontrolled areas. When responding to a fire alarm in buildings or areas containing agents, fire-fighting personnel should wear full firefighter protective clothing (flame resistant) during chemical agent fire-fighting and fire rescue operations. Respiratory protection is required. Positive pressure, full facepiece, NIOSH-approved self-contained breathing apparatus (SCBA) will be worn where there is danger of oxygen deficiency and when directed by the fire chief or chemical accident/incident (CAI) operations officer. In cases where fire-fighters are responding to a chemical

accident/incident for rescue/reconnaissance purposes, they will wear appropriate levels of protective clothing (see Section VIII).

Do not breathe fumes. Skin contact with agent must be avoided at all times. Although the fire may destroy most of the agent, care must still betaken to assure the agent or contaminated liquids do not further contaminate other areas or sewers. Contact with the agent liquid or vapor can be fatal.

NFPA 704 Signal:

Health - 4
Flammability - 1
Reactivity - 1
Special - 0

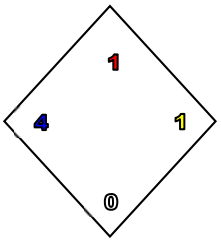

Section VI - Accidental release measures

Steps To Be Taken In Case Material Is Released Or Spilled: Only personnel in full protective clothing will be allowed in an area where HT is spilled (See Section VIII). In case of personnel contamination see Section IV for emergency and first aid instructions. See Section XIII for additional spill control and waste disposal methods.

Section VII - Handling and storage

Precautions To Be Taken In Handling and Storing: When handling agents, the buddy system will be incorporated. No smoking, eating, or drinking in areas containing agents is permitted. Containers should be periodically inspected for leaks, (either visually or using a detector kit). Stringent control over all personnel practices must be exercised. Decontaminating equipment will be conveniently located. Exits must be designed to permit rapid evacuation. Chemical showers, eyewash stations, and personal cleanliness facilities must be provided. Wash hands before meals and, as appropriate, shower thoroughly with special attention given to hair, face, neck, and hands using plenty of soap and water before leaving at the end of the workday.

Other Precautions: HT should be stored in containers made of glass for Research, Development, Test and Evaluation (RDTE) quantities or one-ton steel containers for large quantities. Agent containers will be stored in a single containment system with in a laboratory hood or in double containment system.

For additional information see "AR 385-10, The Army Safety Program," "DA Pam 385-61, Toxic Chemical Agent Safety Standards," and "DA Pam 40-173, Occupational Health Guidelines for the Evaluation and Control of Occupational Exposure to Mustard Agents H, HD, and HT".

Section VIII - Exposure control/personal protection

Exposure Limits for Respiratory Protection for HT:

Unprotected Workers:

Concentration (mg/m^3)	Time Limits
Less than or equal to 0.0004[1]	8 hours

Up to or less than 0.0016	2 hours[2]

Protected Workers:

Type of Respiratory Protection Worn (based on air monitoring results):

1. M40 Military Mask, CBRN NIOSH Approved Full Face Air Purifying Respirator

Concentration (mg/m^3)	Time Limits
$\leq$ 0.003	Time limit will be kept at a minimum to perform the operation, and will be dictated by the local Heat Stress Program for personal protective equipment and clothing[3]

2. Pressure Demand Supplied Air Respirator with Full Face Respirator

Concentration (mg/m^3)	Time Limits[4]
0.0004 to 0.7[5]	Time limit will be kept at a minimum to perform the operation, and will be dictated by the local Heat Stress Program for personal protective equipment and clothing.

3. Pressure Demand Supplied Air Respirator with Full Face Respirator in combination with an Auxiliary Self-contained Breathing Apparatus (SCBA) or just SCBA

Concentration (mg/m^3)	Time Limits[4]
Greater than 0.7	These concentrations should be expected only in emergency situations. Operations should not be conducted at these concentrations.

---

[1] As an 8-hr TWA average.
[2] Maximum continuous time at this concentration. Equivalent to 8-hr TWA. Source: DA, Pamphlet 385-61, Toxic Chemical Agent Safety Standards, 13 November 2012.
[3] The M40 mask may be used for escape from environments containing concentrations above the STEL. The M40 mask may used for routine entry with real-time monitoring for the STEL and historical monitoring for the WPL. The M40 mask will not be used for routine protection above the STEL or in the absence of WPL monitoring.
[4] For SCBA wearers, time limit is constrained by life of the air cylinder (maximum of 30 to 45 minutes). For Air Supply wearers, time limits should be kept to a minimum. Should use of the auxiliary SCBA be necessary, time limit will be constrained by the life of the breathing air cylinder, and egress from the area must be performed before its expiration.
[5] The Immediately Dangerous to Life and Health Value.

Ventilation:

Local Exhaust: Mandatory. Must be filtered or scrubbed to limit exit concentrations. Air emissions shall meet local, state and federal regulations.

Special: Chemical laboratory hoods will have an average inward face velocity of 100 linear feet per minute (lfpm) +/- 20% with the velocity at any point not deviating from the average face velocity by more than 20%. Existing laboratory hoods will have an inward face velocity of 150 lfpm +/- 20%. Laboratory hoods will be located such that cross drafts do not exceed 20% of the inward face velocity. A visual performance test using smoke producing devices will be performed in assessing the ability of the hood to contain agent HT.

Other: Recirculation of exhaust air from agent areas is prohibited. No connection between agent area and other areas through the ventilation system is permitted. Emergency backup power is necessary. Hoods should be tested semiannually or after modification or maintenance operations. Operations should be performed 20 centimeters

inside hoods.

Protective Gloves: Butyl Rubber gloves M3 and M4
Norton, Chemical Protective Glove Set

Eye Protection: As a minimum, safety glasses with side shields will be worn. For splash hazards use goggles and face shield. Maintain eyewash facilities in work area.

Other Protective Equipment: For laboratory operations, wear lab coats, gloves and have mask readily accessible. In addition, daily clean smocks, foot covers, and head covers will be required when handling contaminated lab animals. In the case of a spill, the minimum protective clothing should be Level B after the site has been evaluated, otherwise Level A.

Monitoring: Available monitoring equipment for agent HT is the M8/M9 detector paper, blue band tube, M256/M256A1 kits, bubbler, Depot Area Air Monitoring System (DAAMS), Automated Continuous Air Monitoring System (ACAMS), CAM-M1, Hydrogen Flame Photometric Emission Detector (HYFED), Miniature Chemical Agent Monitor (MINICAM), and the Real Time Analytical Platform RTAP).

Section IX - Physical and Chemical Properties

Boiling Point: No constant boiling point

Vapor Pressure (torr): 0.077 @ 25 ° C

Vapor Density (relative to air): 6.5 (calculated based on 60:40 HT mixture)

Solubility: Slightly soluble in water and soluble in most organic solvents.

Specific Gravity (H_20=1): 1.265 @ 20 °C

Freezing/Melting Point: 1.3 °C

Liquid Density (g/ml): 1.263 @ 20 °C

Volatility (mg/m^3): 783 @ 25 °C

Viscosity (CENTIPOISE): 7.62 @ 20 °C

Molecular Weight: 188.96 (based on 60:40 HT wt. %)

Appearance & Odor: Pale yellow to brown liquid. Garlic-like odor less pronounced than mustard.

Odor threshold: Not available

Flashpoint: Flashpoint range 109 to 115 °C

Flammability Limits (% by volume): Not Available

Lower Explosive Limit: Not Available

Upper Explosive Limit: Not Available

Autoignition Temperature: Not Available

Decomposition Temperature: 165 to 180 °C

pH: Not Available

Initial boiling point and boiling range: Not Available

Evaporation rate: Not Available

Partition coefficient: n-octanol/water: Not Available

Section X - Stability and Reactivity

Stability: Pressure develops in steel.

Rate of Hydrolysis: Hydrolyzed by prolonged boiling with water or treatment with caustic alkalis.

Hydrolysis Products: Hydrogen chloride, thiodiglycol and sulfonium aggregates; based on HD

Action on Metals and Other Materials: Very little when pure. Canadian HT corrodes steel at a rate of 0.00007 in./month @ 65 ºC.

Hazardous Polymerization: Will not occur.

Section XI - Toxicological Information

Airborne Exposure Limits (AEL) [2]:

Worker Population Limit (WPL) 8-hr TWA [1] mg/m^3	STEL 15-min TWA [1] mg/m^3	IDLH [1] mg/m^3	General Population Limit (GPL) 12-hr TWA [1] mg/m^3
0.0004	0.003	0.7	0.00002

[1] These values can be found in the DA, Pamphlet 385-61, Toxic Chemical Agent Safety Standards, 13 November 2012..
[2] To date, the Occupational Safety and Health Administration (OSHA) have not promulgated a permissible exposure concentration for HT.

Routes of Entry: The routes of entry for mustard agents are inhalation and ingestion, as well as eye and skin contact.

NOTE: The information on the toxicological data for HT has been taken from those found for HD since they are very similar in composition.

Effects Of Exposure: HT is a vesicant (causing blisters) and alkylating agent producing cytotoxic action on the hematopoietic (blood-forming) tissues, which are especially sensitive. The rate of detoxification of HT in the body is very slow and repeated exposures produce a cumulative effect.

HT has also been shown to be carcinogenic and mutagenic in animals.

Signs and Symptoms: The acute signs and symptoms following mustard exposure are not immediate; they are delayed in appearance. The duration of the latent period and the degree of injury are both dependent on the severity of exposure as well as organs affected. The delay of onset is dose-dependent and may range from hours to days. The latency period for ocular (eye) effects is shorter than that for other tissues.

Mild eye exposure symptoms to mustard include inflammation, conjunctivitis possibly with lacrimation, grittiness in the eye, and erythema (reddening) of the lids and conjunctiva. Severe symptoms include photophobia, blepharospasm, pain, corneal erosion, iritis, conjunctival vascularization, ulceration and corneal opacification (blindness).

Skin exposure to mustard vapor is marked by delayed appearance. Mild symptoms include erythema, edema, itching, burning and pain. Severe symptoms include vesication or blisters. Liquid mustard exposure on skin may result in an area of gray-white necrotic skin surrounded by erythema and vesication.

Inhalation of mustard vapor causes damage primarily to the nasopharygeal, larygeal and tracheobronchial mucosa. Respiratory symptoms to mustard vapor vary in degree of onset and intensity related to the degree of exposure. Mild symptoms to the airway include hoarseness, inflammation of the respiratory mucosa, congestion, coughing and edema. Severe symptoms include necrosis, sloughing of the mucosa and chemical pneumonia. Repeated exposures or prolonged inhalation can cause bronchiectasis or chronic bronchitis.

Gastrointestinal symptoms of intense mustard exposure include nausea and vomiting.

Like other alkylating agents, systemic absorption results in injury to the bone marrow, lymph nodes, and spleen producing leukopenia and thrombocytopenia. Other systemic effects include: fever; CNS depression; bradycardia or cardiac irregularities; hemoconcentration; and shock.

Chronic Exposure: Chronic mustard-induced illnesses are most common in the eyes, skin, respiratory track or bone marrow. Delayed, recurrent keratoconjunctivitis of the eyes has been documented in some cases as long as 45 years from original exposure. Healing of mustard blisters may result in skin exfoliation and areas of hypo- or hyperpigmentation. Exposure can cause chronic lung impairment (productive cough, shortness of breath, chest pain, frequent pulmonary infections and bronchitis). Prolonged human exposure has been associated with cancer of the tongue, paranasal sinus, larynx, bronchus, lung, and mediastinum (cavity between the right and left lung). Tumors observed have been of squamous (scale like) or undifferentiated (alterated) cell types. Consider the possibility of skin cancer because of the frequency of this lesion in animal studies. Since sulfur mustard agent is similar in its effects to nitrogen mustard, which has been associated with human leukemia, this disease might also be expected to occur in humans chronically exposed to mustard.

Toxicity Estimates [1]:

<u>Vapor (Inhalation/Ocular)</u>
ECt50 (Mild) = 25 mg-min/m^3
ECt50 (Severe) [2] = 100 mg-min/m^3 {3}
LCt50 = 1000 mg-min/m^3

<u>Vapor (Percutaneous) [4,5]</u>
ECt50 (Mild) = 50 mg-min/m^3
ECt50 (Severe) [2] = 500 mg-min/m^3
LCt50 = 10000 mg-min/m^3

<u>Liquid (Percutaneous)</u>
ED50 = 600 mg/70 kg man
LD50 = 1400 mg/70 kg man

---

[1] Data for HT are limited and toxicity estimates are based upon HD, as applicable. Estimates for inhalation vapor

exposure are based on a minute volume (MV) of 15 liters. The exposure time is 2 minutes. The concentration-time profiles are unknown.
[2] Based on ocular (eye) effects.
[3] Recent analysis of archival human data has indicated that this value studies have may be 75 mg-min/m^3.
[4] Personnel are masked.
[5] Values for percutaneous vapor are for moderate temperatures (85 ^oF and below). The effective dosages for hot temperatures (85 ^oF and above) will be less by at least a factor of 2.

Section XII - Ecological information

Persistence and degradability: Not Available

Bioaccumulative potential: Not Available

Mobility in soil: Not Available

Results of PBT and vPvB assessment: Not Available

Other adverse effects: Not Available

Section XIII - Disposal considerations

Recommended Field Procedures: Spills of HT must be contained by using vermiculite, diatomaceous earth, clay or fine sand. Decontaminate with copious amounts of a 5% sodium hypochlorite solution. Scoop up all material and place in approved DOT containers. Cover the contents of the drum with decontaminating solution as above. The exterior of the drum shall be decontaminated and then labeled IAW EPA and DOT regulations. All leaking containers shall be overpacked with absorbent (e.g. vermiculite) placed between the interior and exterior containers. Decontaminate and label IAW EPA and DOT regulations. Dispose of IAW Federal, state and local regulations. Conduct general area monitoring with an approved monitor to confirm that the atmospheric concentrations do not exceed the STEL (See Sections XI and VIII).

If 5 percent sodium hypochlorite solution is not available then the following decontaminants may be used instead and are listed in the order of preference: Calcium Hypochlorite* and Super Tropical Bleach Slurry (STB).

***WARNING:** Pure, undiluted Calcium Hypochlorite (HTH) will burn on contact with liquid blister agent.

Leaking munitions should be processed in accordance with established chemical demilitarization SOPs, see "DA Pam 385-61, Toxic Chemical Agent Safety Standards".

Recommended Laboratory Procedures: A minimum of 65 grams of decon solution per gram of HT is allowed to agitate for a minimum of one hour. Agitation is not necessary following the first hour if a single phase is obtained. At the end of 24 hours, the resulting solution shall be adjusted to a pH between 10 and 11. Test for presence of active chlorine by use of acidic potassium iodide solution to give free iodine color. Place 3 ml of the decontaminate in a test tube. Add several crystals of potassium iodine and swirl to dissolve. Add 3 ml of 50 wt. percent sulfuric acid: water and swirl. **Immediate** iodine color indicates the presence of active chlorine. If negative, add additional 5.25 percent Sodium Hypochlorite solution to the decontamination solution, wait two hours, then test again for active chlorine. Continue procedure until positive chlorine is given by solution.

A 10 wt percent HTH (calcium hypochlorite) mixture may be substituted for Sodium Hypochlorite. Use 65 grams of decon per gram of HT and continue the test as described for Sodium Hypochlorite.

Scoop up all material and place in approved DOT containers. Cover the contents of the drum with decontaminating solution as above. The exterior of the drum shall be decontaminated and then labeled IAW EPA and DOT

regulations. All leaking containers shall be overpacked with vermiculite placed between the interior and exterior containers. Decontaminate and label IAW EPA and DOT regulations. Dispose of the material IAW waste disposal methods provided below. Dispose of the material used to decontaminate exterior of drum IAW Federal, state and local regulations. Conduct general area monitoring with an approved monitor to confirm that the atmospheric concentrations do not exceed the STEL (See Sections XI and VIII).

NOTE: Surfaces contaminated with HT and then rinse-decontaminated may evolve sufficient HT vapor to produce a physiological response.

Waste Disposal Method: Open pit burning or burying of HT or items containing or contaminated with HT in any quantity is prohibited. Waste HT and associated decontamination solutions may be Resource Conservation and Recovery Act (RCRA) regulated hazardous wastes due to a State listing of the chemical agent, or the characteristics of the waste, to include contaminates. An evaluation of the Federal and State waste disposal regulations must be conducted to determine the appropriate disposal method.

Section XIV - Transport information

NOTE: Forbidden for transport other than via military (Technical Escort Unit) transport according to 49 CFR Part 173.7(b), DOD 4500.9-R and AR 50-6.

Proper Shipping Name: Toxic by inhalation liquid, n.o.s. (Bis(2-chloroethyl) sulfide and Bis(2-(2-chloroethylthio) ethyl) ether)

UN ID Number: UN3381

DOT Hazard Class: 6.1, Inhalation Hazard Zone A

Packing Group: I

DOT Label: Poison Inhalation Hazard or Toxic Inhalation Hazard. See 49 CFR 172.400a(a)(3) for exceptions to unit packaging labeling and 173.7(b) for other exceptions when material is transported by Technical Escort Units.

NOTE: “Poison” and “Toxic” are used interchangeably for all markings, labels and placards in continental US transportation. “Toxic” is required for international transportation.

DOT Marking: Toxic by inhalation liquid, n.o.s. (Bis(2-chloroethyl) sulfide and Bis(2-(2-chloroethylthio) ethyl) ether) UN3381, Inhalation Hazard Zone A

DOT Placard: Poison Inhalation Hazard or Toxic Inhalation Hazard

Emergency Accident Precautions And Procedures: See Sections V, VI, VIII, and XIII.

Precautions To Be Taken In Transportation: Motor vehicles will be placarded regardless of quantity. Drivers will be given full information regarding shipment and conditions in case of an emergency. AR 50-6 deals specifically with the shipment of chemical agents.

Section XV - Regulatory information

No applicable information was found.

Section XVI - Other information

Preparation Information:
U.S. Army Edgewood Chemical Biological Center (ECBC)
ATTN: RDCB-DPC-RH
Aberdeen Proving Ground, MD 21010-5424
Business Phone: 410-436-4411 or 4414, Monday through Friday during the hours of 8:00 AM to 4:30 PM EDT

Revised: 29 May 2015

The Edgewood Chemical Biological Center (ECBC), Department of the Army believes that the data contained herein are actual and are the results of the tests conducted by ECBC experts. The data is not to be taken as a warranty or representation for which the Department of the Army or ECBC assumes legal responsibility. This information is offered solely for consideration. Any use of this data and information contained in this SDS must be determined by the user to be in accordance with applicable Federal, State, and local laws and regulations.

(This page intentionally left blank.)

Safety Data Sheet

Nitrogen Mustard (HN-3)

Section I – Identification

Manufacturer's Address:
U.S. Army Edgewood Chemical Biological Center (ECBC)
ATTN: RDCB-DPC-RH
Aberdeen Proving Ground, MD 21010-5424
Business Phone: 410-436-4411 or 4414, Monday through Friday during the hours of 8:00 AM to 4:30 PM EDT
Emergency Phone/RDECOM Operations Center: 410-278-9131

Chemical Name: 2,2',2"-Trichlorotriethylamine

Trade name and synonyms:
Tris(2-chloroethyl)amine
Tri(2-chloroethyl)amine
HN-3
Nitrogen mustard-3
EA 1053
TO
TL 145
TS 160

Chemical Family: Chloroamino Hydrocarbon

Empirical Formula and Chemical Structure:

$C_6H_{12}Cl_3N$

```
                 CH2CH2Cl
               /
ClCH2CH2-N
               \
                CH2CH2Cl
```

Recommended Use and Restrictions on Use: Laboratory Chemicals

Section II – Hazard(s) Identification

Hazard Classification:
Acute Toxicity, Category 1 (Dermal, Inhalation)
Carcinogenicity, Category 1A
Eye Damage/Irritation, Category 1

Signal Word: Danger

Hazard Statements(s):

Fatal in contact with skin
Fatal if inhaled
May cause cancer
Causes serious eye damage

Pictograms:

Precautionary Statements:

- Do not get in eyes, on skin, or on clothing.
- Wash hands thoroughly after handling.
- Do not eat, drink or smoke when using this product.
- Wear protective gloves/protective clothing/eye protection/face protection.
- If on skin: Wash with plenty of personnel decontaminant
- If in eyes: Rinse cautiously with water for several minutes. Remove contact lenses, if present and easy to do. Continue rinsing.
- Immediately call 911.
- Take off immediately all contaminated clothing and wash it before reuse.
- Store locked up.
- Dispose of contents/container in accordance with federal, state, and local laws.
- Do not breathe dust/fume/gas/mist/vapors/spray.
- In case of inadequate engineering controls, wear respiratory protection.
- If inhaled: Remove person to fresh air and keep comfortable for breathing.
- Specific treatment is urgent (see Section IV).
- Store in a well-ventilated place. Keep container tightly closed.
- Obtain Special instructions before use.
- Do not handle until all safety precautions have been read and understood.
- If exposed or concerned: Get medical advice/attention.

Description of any hazards not otherwise classified: No applicable information was found.

Section III - Composition/information on ingredients

Ingredients/Name: Nitrogen Mustard - HN-3
CAS Registry Numbers: 555-77-1
Percentage by Weight: 100%

Section IV – First-aid Measures

NOTE: Prior to rendering first aid, take steps for self protection such as donning a protective mask and other protective equipment. Decontaminate the individual as indicated below.

Vapor Exposure: Immediately don a protective mask. Move to a clean air environment and decontaminate by removing all clothing and shampooing or rinsing the hair to prevent vapor off gassing.

Liquid Skin Exposure: Move away from the area of contamination and don a protective mask. Immediately

remove all contaminated clothing and spot decontaminate the affected area of the skin with Reactive Skin Decontamination Lotion (RSDL) for at least a two-minute contact time, followed by a soap-and-water wash or shower. This is the preferred skin decontaminant for immediate spot decontamination. Two permissible alternative skin decontaminants include a) soap and water and b) 0.5% sodium hypochlorite solution. (NOTE: RSDL has been shown to be superior across the broad spectrum of agents to both soap and water and also to 0.5% sodium hypochlorite solutions. Do not use 0.5% sodium hypochlorite solution to rinse off RSDL, or in any combination with the lotion; this can lead to skin irritation and inflammation that may increase the absorbed dose of agent. RSDL is FDA-approved only for initial spot decontamination, not for full body decontamination. RSDL is also approved only for use on intact skin, not on wounds, eyes, or mucous membranes. For rinsing the eyes, mucous membranes, or open wounds, use water or saline only.)

Full-body decontamination should be performed with soap and water. Wash the skin surface and hair in warm or tepid water at least three times. The rapid physical removal of a chemical agent is essential. Scrubbing of exposed skin with a stiff brush or bristles is discouraged, because skin damage may occur and may increase absorption of agent. Use liquid soap (discard and replace the soap container after use), copious amounts of water, and mild to moderate friction with a single-use sponge or washcloth in the first and second washes. The third wash should be a rinse with copious amounts of warm or tepid water. Shampoo can be used to wash the hair. If tepid water is not available, but cold water is, use cold water. Do not delay decontamination to obtain tepid or warm water.

If 0.5% sodium hypochlorite solution is used on skin instead of soap and water, it should also be applied with mild to moderate friction, with a single-use sponge or washcloth in the first and second applications. The third wash should be a rinse with copious amounts of warm or tepid water.

Eye Contact: Immediately move away from the area of contamination and begin flushing eyes, mucous membranes, or open wounds with sterile saline or water. Flush the eyes immediately with sterile saline or water by tilting the head to the side, pulling the eyelids apart with gloved fingers and pouring slowly into the eyes. A Morgan lens may also be used for continuous eye irrigation. Transfer the patient to a medical facility **Immediately.**

Ingestion: Do not induce vomiting. First symptoms are likely to be gastrointestinal. Seek medical attention **Immediately. Do not handle vomited material to avoid further contamination.**

Inhalation: If breathing is difficult, administer oxygen. If breathing has stopped and there is no pulse, begin CPR while awaiting EMS response. Because of the potential of rescuer exposure to facial contamination or to agent in expired air, avoid mouth-to-mouth resuscitation. Dial 911 to request immediate transport of the individual to a medical treatment facility for evaluation and treatment.

NOTE: The U.S. Army Public Health Command is responsible the medical guidance provided in this SDS. Questions concerning medical guidance provided in the this SDS may be addressed to USAPHC, ATTN: Program 66/Surety Medicine, 5158 Blackhawk Road, Bldg E-1570, Aberdeen Proving Ground, Maryland 21010-5403.

Section V - Fire-fighting measures

Extinguishing Media: Water, fog, and foam, CO_2. Avoid use of extinguishing methods that will cause splashing or spreading of HN-3.

Special Fire Fighting Procedures: All persons not engaged in extinguishing the fire should be immediately evacuated from the area. Fires involving HN-3 should be contained to prevent contamination to uncontrolled areas. When responding to a fire alarm in buildings or areas containing agents, fire-fighting personnel should wear full firefighter protective clothing (flame resistant) during chemical agent fire-fighting and fire rescue operations. Respiratory protection is required. Positive pressure, full facepiece, NIOSH-approved self-contained breathing apparatus (SCBA) will be worn where there is danger of oxygen deficiency and when directed by the fire chief or chemical accident/incident (CAI) operations officer. In cases where fire-fighters are responding to a chemical

accident/incident for rescue/reconnaissance purposes they will wear appropriate levels of protective clothing (See Section VIII).

Do not breathe fumes. Skin contact with agent must be avoided at all times. Although the fire may destroy most of the agent, care must still be taken to assure the agent or contaminated liquids do not further contaminate other areas or sewers. Contact with the agent liquid or vapor can be fatal.

Unusual Fire & Explosion Hazards: None

NFPA 704 Signal:

Health - 4
Flammability - 1
Reactivity - 1
Special - 0

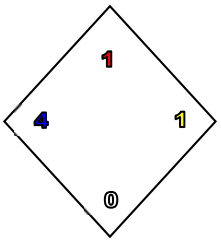

Section VI - Accidental release measures

Steps To Be Taken In Case Material Is Released or Spilled: Only personnel in full protective clothing (See Section VIII) will be allowed in an area where HN-3 is spilled. In case of personnel contamination see Section IV for emergency and first aid instructions. See Section XIII for additional spill control and waste disposal methods.

Section VII - Handling and storage

Precautions To Be Taken In Handling and Storing: When handling agents, the buddy system will be incorporated. No smoking, eating, or drinking in areas containing agents is permitted. Containers should be periodically inspected for leaks, (either visually or using a detector kit). Stringent control over all personnel practices must be exercised. Decontaminating equipment will be conveniently located. Exits must be designed to permit rapid evacuation. Chemical showers, eyewash stations, and personal cleanliness facilities must be provided. Wash hands before meals and, as appropriate, shower thoroughly with special attention given to hair, face, neck, and hands using plenty of soap and water before leaving at the end of the workday.

Other Precautions: HN-3 should be stored in containers made of glass for Research, Development, Test and Evaluation (RDTE) quantities or one-ton steel containers for large quantities. Agent containers will be stored in a single containment system with in a laboratory hood or in double containment system.

For additional information see "AR 385-10, The Army Safety Program," "DA Pam 385-61, Toxic Chemical Agent Safety Standards," and "DA Pam 40-173, Occupational Health Guidelines for the Evaluation and Control of Occupational Exposure to Mustard Agents H, HD, and HT."

Section VIII - Exposure control/personal protection

Respiratory Protection:

Concentration	Respiratory Protective Equipment

< 0.003 mg/m^3	A CBRN NIOSH approved full face piece, chemical canister air-purifying, protective masks will be on hand for escape. The M-40 series protective masks are acceptable for this use.
> or = 0.003 mg/m^3	CBRN NIOSH approved Air Supply Line with Full Face Respirator and Auxiliary Self-contained Breathing Apparatus (SCBA), or SCBA. (See DA Pam 386-61 for examples)

Ventilation

Local Exhaust: Mandatory. Must be filtered or scrubbed. Air emissions shall meet local, state and federal regulations.

Special: Chemical laboratory hoods will have an average inward face velocity of 100 linear feet per minute (lfpm) ± 20% with the velocity at any point not deviating from the average face velocity by more than 20%. Existing laboratory hoods will have an inward face velocity of 150 lfpm ± 20%. Laboratory hoods will be located such that cross drafts do not exceed 20% of the inward face velocity. A visual performance test using smoke producing devices will be performed in assessing the ability of the hood to contain agent HD.

Other: Recirculation of exhaust air from agent areas is prohibited. No connection between agent area and other areas through the ventilation system is permitted. Emergency backup power is necessary. Hoods should be tested semiannually or after modification or maintenance operations. Operations should be performed 20 centimeters inside hoods.

Protective Gloves: Butyl Rubber gloves M3 and M4
Norton, Chemical Protective Glove Set

Eye Protection: At a minimum, safety glasses with side shields will be worn. For splash hazards use goggles and face shield.

Other Protective Equipment: For laboratory operations, wear lab coats, gloves and have mask readily accessible. In addition, daily clean smocks, foot covers, and head covers will be required when handling contaminated lab animals. In the case of a spill, the minimum protective clothing should be Level B after the site has been evaluated, otherwise Level A.

Monitoring: Available monitoring equipment for agent HN-3 is the M8/M9 paper M18A2 kit, the M256/M256A1 kits, Depot Area Air Monitoring System (DAAMS) and the Miniature Chemical Agent Monitor (MINICAM).

Section IX - Physical and Chemical Properties

Boiling Point: 257 ^{o}C; at atmospheric pressure HN-3 decomposes below boiling.

Vapor Pressure (torr): 0.011 @ 25 ^{o}C

Vapor Density (Air=1): 7.1

Solubility: Solubility in water is approximately 0.08 g HN-3/L at ambient temperature. Miscible with common organic solvents.

Specific Gravity (H_20=1): 1.24 @ 25 ^{o}C

Freezing/Melting Point (ºC): -3.74 ºC

Liquid Density (g/mL): 1.2352 @ 25 ºC

Volatility (mg/m^3): 120 @ 25 ºC

Viscosity (Centipoise): Data not available

Molecular Weight: 204.53

Appearance and Odor: Dark oily liquid; colorless when pure. Has a geranium like odor; none when pure.

Odor threshold: Not available

Flashpoint: Data not available

Flammability Limits (% by volume): Data not available

Lower Explosive Limit: Not Available

Upper Explosive Limit: Not Available

Autoignition Temperature: Not Available

Decomposition Temperature: Above 150 ºC.

pH: Not Available

Initial boiling point and boiling range: Not Available

Evaporation rate: Not Available

Partition coefficient: n-octanol/water: Not Available

Section X - Stability and Reactivity

Stability: In storage HN-3 darkens and forms crystalline deposits. Relatively stable in steel containers, if dry.

Rate of Hydrolysis: Very slow. Hydrolysis is not complete even after several days unless alkali is present.

Hazardous Decomposition: Complete hydrolysis gives the following products: hydrochloric acid and triethanolamine (TEA), $N(CH_2CH_2OH)_3$. The process involves a complex series of reactions, with formation of hydrochloride, cyclic imonium salts, a dimer, etc.

Action on Metals and Other Materials: No attack on iron if dry. Corrodes steel at a rate 0.00001 to 0.00005 in./month @ 65 ºC.

Hazardous Polymerization: Slowly.

Section XI - Toxicological Information

Airborne Exposure Limit (AEL): The AEL for HN-3 has not been established. To date, the Occupational Safety and Health Administration (OSHA) has not promulgated a permissible exposure concentration for HN-3.

Given HN-3 similarity to HD a monitoring level of 0.003 mg/m^3 has been used as a STEL.

Effects of Overexposure: Vapors of HN-3 are irritating to the eyes and nasal membranes even in low concentrations. HN-3 is a vesicant (causing blisters) and alkylating agent producing cytotoxic action on the hematopoietic (blood forming) tissues. The body does not naturally detoxify HN-3, repeated exposures produces a cumulative effect.

Nitrogen Mustards have been found to be a human carcinogen by the International Agency for Research on Cancer (IARC).

Acute Physiological Action of HN-3 is classified as Local and Systemic.

Local Actions: HN-3 affects both the eyes and the skin. Skin damage occurs after percutaneous absorption. Skin penetration is rapid with skin irritation noted very shortly after contact with the agent. Reddening (erythema) of the skin may occur within 30 minutes to 1 hour following the exposure, depending on degree of exposure and individual sensitivity. Blistering of the skin may not occur for more than 6-12 hours. In some cases eye irritation, tearing, and sensitivity to light (photophobia) develop immediately. Tender skin, mucous membrane and perspiration-covered skin is more sensitive to the effects of HN-3. Local action on the eyes produces severe necrotic damage and loss of eyesight. Exposure of eyes to HN-3 vapor or aerosol produces lacrimation, photophobia, and inflammation of the conjunctiva and cornea. Greatest immediate effect of HN-3 is on the eyes.

Systemic Actions: Occurs primarily through inhalation and ingestion. The HN-3 vapor or aerosol is less toxic to the skin or eyes than the liquid form. When inhaled, the upper respiratory tract (nose, throat, trachea) is inflamed after a few hours latency period, accompanied by sneezing, persistent coughing, hoarseness, and loss of voice (similar to mustard exposures). Fever and moist rails develop followed by loss of appetite, diarrhea, fever, and apathy). Exposure to nearly lethal doses of HN-3 can produce injury to bone marrow, lymph nodes, and spleen as showed by a drop in white blood cell count, thus resulting in increased susceptibility to local and systemic infections. Ingestion of HN-3 will produce severe stomach pains, vomiting, and bloody stools.

Chronic Exposure: HN-3 can cause sensitization, chronic lung impairment, (cough, shortness of breath, chest pain); in mild vapor exposures there may be no skin lesions. After severe exposure or after exposure to liquid nitrogen mustard, reddening may appear earlier than in mustard contamination. There may be irritation and itching as with mustard; blisters may appear later. However, blisters may not occur for more than 6-12 hours following exposure. Skin lesions are similar to those caused by mustard.

Toxicity Estimates[1]:

<u>Vapor (Inhalation/Ocular)</u>
ECt50 (Mild) = 25 $mg\text{-}min/m^3$
ECt50 (Severe)[2] = 75 $mg\text{-}min/m^3$
LCt50 = 1000 $mg\text{-}min/m^3$

<u>Vapor (Percutaneous)[3,4]</u>
ECt50 (Mild) = 50 $mg\text{-}min/m^3$
ECt50 (Severe)[2] = 500 $mg\text{-}min/m^3$
LCt50 = 10000 $mg\text{-}min/m^3$

<u>Liquid (Percutaneous)</u>
ED50 = 600 mg/70 kg man
LD50 = 1400 mg/70 kg man

[1] Data for HN-3 are limited and toxicity estimates are based upon HD, as applicable. Estimates for inhalation vapor exposure are based on a minute volume (MV) of 15 liters. The exposure time is 2 minutes. The concentration-time profiles are unknown.
[2] Based on ocular (eye) effects.
[3] Personnel are masked.
[4] Values for percutaneous vapor are for moderate temperatures (85 ^{o}F and below). The effective dosages for hot temperatures (85 ^{o}F and above) will be less by at least a factor of 2.

Section XII - Ecological information

Persistence and degradability: Not Available

Bioaccumulative potential: Not Available

Mobility in soil: Not Available

Results of PBT and vPvB assessment: Not Available

Other adverse effects: Not Available

Section XIII - Disposal considerations

The HN-3 should be contained using vermiculite, diatomaceous earth, clay or fine sand and neutralized as soon as possible. A minimum of 65 grams of decon solution (5.25% sodium hypochlorite solution) is required for each gram of HN-3. HN-3 must be added to the decon solution. **Do not add decon solution to HN-3.** Allow decon/HN-3 solution to agitate for a minimum of one hour. Agitation is not necessary following the first hour if a single phase is obtained. At the end of 24 hours, the resulting solution shall be adjusted to a pH between10 to 11. Test for the presence of active chlorine by use of acidic potassium iodine and swirl to dissolve. Add 3 ml of 50 wt% sulfuric acid: water and swirl. Immediate iodine color indicates the presence of active chlorine. If negative, add additional 5.25% sodium hypochlorite solution to the decon solution, wait two hours, then test again for active chlorine. Continue procedure until active chlorine is given by solution. Scoop up all material and place in an approved DOT container. Cover the contents with decontaminating solution as above. The exterior of the container will be decontaminated and labeled according to EPA and DOT regulations. All leaking containers will be over packed with absorbent (e.g. vermiculite) placed between the interior and exterior containers. Decontaminate and label according to EPA and DOT regulations. Dispose of the material in accordance with waste disposal methods provided below. Conduct general area monitoring with an approved monitor to confirm that the atmospheric concentrations do not exceed the airborne exposure limits (See Sections XI and VIII).

A 10 wt% calcium hypochlorite (HTH) mixture may be substituted for sodium hypochlorite. Use 65 grams of decon per gram of HN-3 and continue the test as described above.

Warning: Do not use dry Supertropical Bleach (STB) or dry HTH as they react violently with some chemicals.

Note: Surfaces contaminated with HN-3, then rinsed and decontaminated may evolve sufficient HN-3 vapor to produce a physiological response. HN-3 on laboratory glassware may be oxidized by reacting with strong bleaches, alkalies, or other oxidizers.

Waste Disposal Method: Open pit burning or burying of HN-3 or items containing or contaminated with HN-3 in any quantity is prohibited. Waste HN-3 and associated decontamination solutions may be Resource Conservation and Recovery Act (RCRA) regulated hazardous wastes due to a State listing of the chemical agent, or the characteristics of the waste, to include contaminates. An evaluation of the Federal and State waste disposal regulations must be conducted to determine the appropriate disposal method.

Section XIV - Transport information

NOTE: Forbidden for transport other than via military (Technical Escort Unit) transport according to 49 CFR Part 173.7(b), DOD 4500.9-R and AR 50-6.

Proper Shipping Name: Toxic by inhalation liquid, n.o.s. (2,2',2"-Trichlorotriethylamine)

UN ID Number: UN3381

DOT Hazard Class: 6.1, Packing Group I, Inhalation Hazard Zone A

DOT Label: Poison Inhalation Hazard or Toxic Inhalation Hazard. See 49 CFR 172.400a(a)(3) for exceptions to unit packaging labeling and 173.7(b) for other exceptions when material is transported by Technical Escort Units.

NOTE: "Poison" and "Toxic" are used interchangeably for all markings, labels and placards in continental US transportation. "Toxic" is required for international transportation.

DOT Marking: Toxic by inhalation liquid, n.o.s. (2,2',2"-Trichlorotriethylamine) UN3381, Inhalation Hazard Zone A

DOT Placard: Poison Inhalation Hazard or Toxic Inhalation Hazard

Emergency Accident Precautions And Procedures: See Sections V, VI, VIII, and XIII.

Precautions To Be Taken In Transportation: Motor vehicles will be placarded regardless of quantity. Drivers will be given full information regarding shipment and conditions in case of an emergency. AR 50-6 deals specifically with the shipment of chemical agents.

Section XV - Regulatory information

No applicable information was found.

Section XVI - Other information

Preparation Information:
U.S. Army Edgewood Chemical Biological Center (ECBC)
ATTN: RDCB-DPC-RH
Aberdeen Proving Ground, MD 21010-5424
Business Phone: 410-436-4411 or 4414, Monday through Friday during the hours of 8:00 AM to 4:30 PM EDT

Revised: 29 May 2015

The Edgewood Chemical Biological Center (ECBC), Department of the Army believes that the data contained herein are actual and are the results of the tests conducted by ECBC experts. The data is not to be taken as a warranty or representation for which the Department of the Army or ECBC assumes legal responsibility. This information is offered solely for consideration. Any use of this data and information contained in this SDS must be determined by the user to be in accordance with applicable Federal, State, and local laws and regulations.

(This page intentionally left blank.)

Safety Data Sheet
Phosgene

www.ilmoproducts.com

Section 1: Product and Company Identification

ILMO Products Company
7 Eastgate Drive, Jacksonville, Illinois 62650
217-245-2183 800-424-9300 (Chemtrec)

Fax 217-243-7634
E-mail: info@ilmoproducts.com
Web: www.ilmoproducts.com

Product Code: Phosgene

Section 2: Hazards Identification

Danger

Hazard Classification:
Aspiration Hazard (Category 1)
Eye Effects (Category 1)
Gases Under Pressure
Skin Corrosion (Category 2)

Hazard Statements:
Causes serious eye damage
Causes skin irritation
Contains gas under pressure; may explode if heated
May be fatal if swallowed and enters airways

Precautionary Statements
Prevention:
Wash thoroughly after handling.
Wear eye protection/face protection.

Response:
Immediately call a poison center or doctor.
If on skin: Wash with plenty of water.
Do NOT induce vomiting.
If swallowed: Rinse mouth. Do NOT induce vomiting.
Take off contaminated clothing and wash it before reuse.
If skin irritation occurs: Get medical advice/attention.
If in eyes: Rinse cautiously with water for several minutes. Remove contact lenses, if present and easy to do. Continue rinsing.

Storage:
Protect from sunlight.

Generated by the SDS Manager from AsteRisk, LLC. All Rights Reserved

Store in well-ventilated place.
Store locked up.

Disposal:
Dispose of contents and/or container in accordance with applicable regulations.

Section 3: Composition/Information on Ingredients

CAS #
75-44-5

Chemical Substance	Chemical Family	Trade Names
PHOSGENE	acid halides, carboxylic, aliphatic	CARBONYL CHLORIDE; CARBON OXYCHLORIDE; CARBON DICHLORIDE OXIDE; CARBON DICHLORIDE; CARBONIC ACID DICHLORIDE; CHLOROFORMYL CHLORIDE; RCRA P095; STCC 4920540; UN 1076; CCl2O; Carbonic dichloride; Carbonic chloride; Carbonyl dichloride

Section 4: First Aid Measures

Skin Contact	Eye Contact	Ingestion	Inhalation	Note to Physicians
If frostbite or freezing occur, immediately flush with plenty of lukewarm water (105-115 F; 41-46 C). DO NOT USE HOT WATER. If warm water is not available, gently wrap affected parts in blankets. Get immediate medical attention.	Flush eyes with plenty of water for at least 15 minutes. Then get immediate medical attention.	If a large amount is swallowed, get medical attention.	If adverse effects occur, remove to uncontaminated area. Give artificial respiration if not breathing. If breathing is difficult, oxygen should be administered by qualified personnel. Get immediate medical attention.	For inhalation, consider oxygen.

Section 5: Fire Fighting Measures

Suitable Extinguishing Media	Products of Combustion	Protection of Firefighters
Non-flammable. Use suitable extinguishing media for surrounding fire.	At temp over 482F forms carbon monoxide, carbon dioxide, chlorine and hydrogen chloride gases, carbon tetrachloride and other toxic gases.	▪ Use a full-body encapsulating chemical protective suit with positive pressure self-contained breathing apparatus. ▪ Use a full-body encapsulating chemical protective suit with positive pressure self-contained breathing apparatus.

Section 6: Accidental Release Measures

Personal Precautions	Environmental Precautions	Methods for Containment
Keep unnecessary people away, isolate hazard area and deny entry. Stay upwind and keep out of low areas. Ventilate closed spaces before entering. Evacuation radius: 150 feet.	Avoid heat, flames, sparks and other sources of ignition.	Stop leak if possible without personal risk. Reduce vapors with water spray. Do not get water directly on material. Do not get water inside container. Trap spilled material at bottom in deep water pockets, excavated holding areas or within sand bag barriers.

Methods for Cleanup	Other Information

Generated by the SDS Manager from AsteRisk, LLC. All Rights Reserved

Methods for Cleanup	Other Information
Small spills: Flood with water. Large spills: Dike for later disposal. Dilute slowly and cautiously with water. Add an alkaline material (lime, crushed limestone, sodium bicarbonate, or soda ash).	Notify Local Emergency Planning Committee and State Emergency Response Commission for release greater than or equal to RQ (U.S. SARA Section 304). If release occurs in the U.S. and is reportable under CERCLA Section 103, notify the National Response Center at (800)424-8802 (USA) or (202)426-2675 (USA).

Section 7: Handling and Storage

Handling	Storage
Store and handle in accordance with all current regulations and standards. Notify State Emergency Response Commission for storage or use at amounts greater than or equal to the TPQ (U.S. SARA Section 302). SARA Section 303 requires facilities storing a material with a TPQ to participate in local emergency response planning (U.S. EPA 40 CFR 355.30). Store outside or in a detached building. Store in a well-ventilated area.	Protect from physical damage. Keep separated from incompatible substances.

Section 8: Exposure Controls/Personal Protection

Exposure Guidelines
PHOSGENE: 0.1 ppm (0.4 mg/m3) OSHA TWA 0.1 ppm ACGIH TWA 0.1 (0.4 mg/m3) NIOSH recommended TWA 10 hour(s) 0.2 ppm (0.8 mg/m3) NIOSH recommended ceiling 15 minute(s)

Engineering Controls

Handle only in fully enclosed systems.

Eye Protection	Skin Protection	Respiratory Protection
Wear splash resistant safety goggles with a face shield. Provide an emergency eye wash fountain and quick drench shower in the immediate work area.	Wear appropriate chemical resistant clothing.	Use a full-body encapsulating chemical protective suit with positive pressure self-contained breathing apparatus.

General Hygiene considerations

- Avoid breathing vapor or mist
- Avoid contact with eyes and skin
- Wash thoroughly after handling and before eating or drinking

Section 9: Physical and Chemical Properties

Physical State	Appearance	Color	Change in Appearance	Physical Form	Odor	Taste
Gas	Clear	Colorless	N/A	Gas	Hay-like odor, pungent odor	N/A

Flash Point	Flammability	Partition Coefficient	Autoignition Temperature	Upper Explosive Limits	Lower Explosive Limits
Not flammable	Not available	Not available	Nonflammable	Nonflammable	Nonflammable

Boiling Point	Freezing Point	Vapor Pressure	Vapor Density	Specific Gravity	Water Solubility	pH	Odor Threshold	Evaporation Rate	Viscosity
46 F (8 C)	-195 F (-126 C)	1180 mmHg @ 20 C	3.4 (Air=1)	1.4	Lightly soluble (594 mg/100 mL @ 25 C; slowly decomposes to hydrochloric acid and carbon dioxide.	Not applicable	0.125 ppm	Not applicable	Not available

Molecular Weight	Molecular Formula	Density	Weight per Gallon	Volatility by Volume	Volatility	Solvent Solubility
98.91	C-CL2-O	Not available	Not available	Not available	Not applicable	Soluble: Soluble in aromatic (benzene, toluene, xylene) and aliphatic hydrocarbons, chlorinated hydrocarbons (chloroform), and organic acids (acetic acid) and esters. Reacts with ethanol.

Generated by the SDS Manager from AsteRisk, LLC. All Rights Reserved

Section 10: Stability and Reactivity

Stability	Conditions to Avoid	Incompatible Materials
Contact with water or moist air may form flammable and/or toxic gases or vapors.	Contact with water or moist air may form flammable and/or toxic gases or vapors.	Bases, metals, combustible materials, oxidizing materials, alcohols, potassium, sodium, water, bases, secondary amines

Hazardous Decomposition Products	Possibility of Hazardous Reactions
Miscellaneous decomposition products	Will not polymerize.

Section 11: Toxicology Information

Acute Effects

Oral LD50	Dermal LD50	Inhalation
: 12.35 ppm/2 hour(s) inhalation-mouse LC50	Not available	Irritation (possibly severe), lack of sense of smell, vomiting, chest pain, difficulty breathing, headache, dizziness, bluish skin color, lung congestion, lung damage, death

Eye Irritation	Skin Irritation	Sensitization
Burns, tearing, eye damage	Irritation (possible severe)	Potentially fatal if inhaled, respiratory tract burns, skin burns, eye burns

Chronic Effects

Carcinogenicity	Mutagenicity	Reproductive Effects	Developmental Effects
Not available	Not available	Not available	No data

Section 12: Ecological Information

Fate and Transport

Eco toxicity	Persistence / Degradability	Bioaccumulation / Accumulation	Mobility in Environment
Fish toxicity: Not available Invertibrate toxicity: Not available Algal toxicity: Not available Phyto toxicity: Not available Other toxicity: Not available	Not available	Not available	Not available

Section 13: Disposal Considerations

Subject to disposal regulations: U.S. EPA 40 CFR 262. Hazardous Waste Number(s): P095. Dispose in accordance with all applicable regulations.

Section 14: Transportation Information

U.S. DOT 49 CFR 172.101

Proper Shipping Name	ID Number	Hazard Class or Division	Packing Group	Labeling Requirements	Passenger Aircraft or Railcar Quantity Limitations	Cargo Aircraft Only Quantity Limitations	Additional Shipping Description
Phosgene	UN1076	2.3	Not applicable	2.3; 8	Forbidden	Forbidden	Toxic-Inhalation Hazard Zone A

Canadian Transportation of Dangerous Goods

Shipping Name	UN Number	Class	Packing Group / Risk Group
Phosgene	UN1076	2.3; 8	Not applicable

Generated by the SDS Manager from AsteRisk, LLC. All Rights Reserved

Section 15: Regulatory Information

U.S. Regulations

CERCLA Sections	SARA 355.30	SARA 355.40
10 LBS RQ	10 LBS TPQ	10 LBS RQ

SARA 370.21

Acute	Chronic	Fire	Reactive	Sudden Release
Yes	No	No	Yes	Yes

SARA 372.65

PHOSGENE

OSHA Process Safety

100 LBS TQ

State Regulations

CA Proposition 65
Not regulated.

Canadian Regulations

WHMIS Classification
A, D1A, E

National Inventory Status

US Inventory (TSCA)	TSCA 12b Export Notification	Canada Inventory (DSL/NDSL)
Listed on inventory.	Not listed.	Not determined.

Section 16: Other Information

NFPA Rating
HEALTH=3 FIRE=0 REACTIVITY=1

0 = minimal hazard, 1 = slight hazard, 2 = moderate hazard, 3 = severe hazard, 4 = extreme hazard

Generated by the SDS Manager from AsteRisk, LLC. All Rights Reserved

(This page intentionally left blank.)

Safety Data Sheet

Lewisite (L)

Section I – Identification

Manufacturer's Address:
U.S. Army Edgewood Chemical Biological Center (ECBC)
ATTN: RDCB-DPC-RH
Aberdeen Proving Ground, MD 21010-5424
Business Phone: 410-436-4411 or 4414, Monday through Friday during the hours of 8:00 AM to 4:30 PM EDT
Emergency Phone/RDECOM Operations Center: 410-278-9131

Chemical Name: Dichloro- (2-chlorovinyl) arsine

Trade name and synonyms:
Arsine, (2-chlorovinyl) dichloro-
Arsonous dichloride, (2-chloroethenyl)
Chlorovinylarsine dichloride
2-Chlorovinyldichloroarsine
Beta-Chlorovinyldichloroarsine
Lewisite
L
EA 1034

Chemical Family: Arsenical (vesicant)

Molecular Formula and Chemical Structure:
$C_2 H_2 As Cl_3$

```
                    Cl
                    /
Cl CH = CH - As
                    \
                     Cl
```

Recommended Use and Restrictions on Use: Laboratory Chemicals

Section II – Hazard(s) Identification

Hazard Classification:
Acute Toxicity, Category 1 (Dermal, Inhalation)
Carcinogenicity, Category 2
Eye Damage/Irritation, Category 1

Signal Word: Danger

Hazard Statements(s):
Fatal in contact with skin
Fatal if inhaled

Suspected of causing cancer
Causes serious eye damage

Pictograms:

Precautionary Statements:

- Do not get in eyes, on skin, or on clothing.
- Wash hands thoroughly after handling.
- Do not eat, drink or smoke when using this product.
- Wear protective gloves/protective clothing/eye protection/face protection.
- If on skin: Wash with plenty of personnel decontaminant
- If in eyes: Rinse cautiously with water for several minutes. Remove contact lenses, if present and easy to do. Continue rinsing.
- Immediately call 911.
- Take off immediately all contaminated clothing and wash it before reuse.
- Store locked up.
- Dispose of contents/container in accordance with federal, state, and local laws.
- Do not breathe dust/fume/gas/mist/vapors/spray.
- In case of inadequate engineering controls, wear respiratory protection.
- If inhaled: Remove person to fresh air and keep comfortable for breathing.
- Specific treatment is urgent (see Section IV).
- Store in a well-ventilated place. Keep container tightly closed.
- Obtain Special instructions before use.
- Do not handle until all safety precautions have been read and understood.
- If exposed or concerned: Get medical advice/attention.

Description of any hazards not otherwise classified: No applicable information was found.

Section III - Composition/information on ingredients

Ingredients/Name: Lewisite
CAS Registry Numbers: 541-25-3
Percentage by Weight: 100%

Section IV – First-aid Measures

NOTE: Prior to rendering first aid, take steps for self protection such as donning a protective mask and other protective equipment. Decontaminate the individual as indicated below.

Vapor Exposure: Immediately don a protective mask. Move to a clean air environment and decontaminate by removing all clothing and shampooing or rinsing the hair to prevent vapor off gassing.

Liquid Skin Exposure: Move away from the area of contamination and don a protective mask. Immediately remove all contaminated clothing and spot decontaminate the affected area of the skin with Reactive Skin Decontamination Lotion (RSDL) for at least a two-minute contact time, followed by a soap-and-water wash or shower. This is the preferred skin decontaminant for immediate spot decontamination. Two permissible alternative skin decontaminants include a) soap and water and b) 0.5% sodium hypochlorite solution. (NOTE: RSDL has been

shown to be superior across the broad spectrum of agents to both soap and water and also to 0.5% sodium hypochlorite solutions. Do not use 0.5% sodium hypochlorite solution to rinse off RSDL, or in any combination with the lotion; this can lead to skin irritation and inflammation that may increase the absorbed dose of agent. RSDL is FDA-approved only for initial spot decontamination, not for full body decontamination. RSDL is also approved only for use on intact skin, not on wounds, eyes, or mucous membranes. For rinsing the eyes, mucous membranes, or open wounds, use water or saline only.)

Full-body decontamination should be performed with soap and water. Wash the skin surface and hair in warm or tepid water at least three times. The rapid physical removal of a chemical agent is essential. Scrubbing of exposed skin with a stiff brush or bristles is discouraged, because skin damage may occur and may increase absorption of agent. Use liquid soap (discard and replace the soap container after use), copious amounts of water, and mild to moderate friction with a single-use sponge or washcloth in the first and second washes. The third wash should be a rinse with copious amounts of warm or tepid water. Shampoo can be used to wash the hair. If tepid water is not available, but cold water is, use cold water. Do not delay decontamination to obtain tepid or warm water.

If 0.5% sodium hypochlorite solution is used on skin instead of soap and water, it should also be applied with mild to moderate friction, with a single-use sponge or washcloth in the first and second applications. The third wash should be a rinse with copious amounts of warm or tepid water.

Eye Contact: Immediately move away from the area of contamination and begin flushing eyes, mucous membranes, or open wounds with sterile saline or water. Flush the eyes immediately with sterile saline or water by tilting the head to the side, pulling the eyelids apart with gloved fingers and pouring slowly into the eyes. A Morgan lens may also be used for continuous eye irrigation. Transfer the patient to a medical facility **Immediately.**

Ingestion: Do not induce vomiting. First symptoms are likely to be gastrointestinal. Seek medical attention **Immediately. Do not handle vomited material to avoid further contamination.**

Inhalation: If breathing is difficult, administer oxygen. If breathing has stopped and there is no pulse, begin CPR while awaiting EMS response. Because of the potential of rescuer exposure to facial contamination or to agent in expired air, avoid mouth-to-mouth resuscitation. Dial 911 to request immediate transport of the individual to a medical treatment facility for evaluation and treatment.

NOTE: The U.S. Army Public Health Command is responsible the medical guidance provided in this SDS. Questions concerning medical guidance provided in the this SDS may be addressed to USAPHC, ATTN: Program 66/Surety Medicine, 5158 Blackhawk Road, Bldg E-1570, Aberdeen Proving Ground, Maryland 21010-5403.

Section V - Fire-fighting measures

Extinguishing Media: Water, fog, foam and CO_2. Avoid use of extinguishing methods that will cause splashing or spreading of L.

Special Fire Fighting Procedures: All persons not engaged in extinguishing the fire should be immediately evacuated from the area. Fires involving L should be contained to prevent contamination to uncontrolled areas. When responding to a fire alarm in buildings or areas containing agents, fire-fighting personnel should wear full firefighter protective clothing (flame resistant) during chemical agent fire-fighting and fire rescue operations. Respiratory protection is required. Positive pressure, full facepiece, NIOSH-approved self-contained breathing apparatus (SCBA) will be worn where there is danger of oxygen deficiency and when directed by the fire chief or chemical accident/incident (CAI) operations officer. In cases where firefighters are responding to a chemical accident/incident for rescue/reconnaissance purposes they will wear appropriate levels of protective clothing (See Section VIII).

Do not breathe fumes. Skin contact with agent must be avoided at all times. Although the fire may destroy most of the agent, care must still betaken to assure the agent or contaminated liquids do not further contaminate other areas

or sewers. Contact with the agent liquid or vapor can be fatal.

Unusual Fire and Explosion Hazards: None known

NFPA 704 Signal:

Health - 4
Flammability - 1
Reactivity - 1
Special - 0

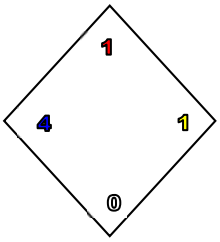

Section VI - Accidental release measures

Steps To Be Taken In Case Material Is Released Or Spilled: If leaks or spills of L occur only personnel in full protective clothing will be allowed in the area (See Section VIII). In case of personnel contamination see Section IV for emergency and first aid instructions. See Section XIII for additional spill control and waste disposal methods.

Section VII - Handling and storage

Precautions To Be Taken In Handling And Storing: When handling agents, the buddy system will be incorporated. No smoking, eating, or drinking in areas containing agents is permitted. Containers should be periodically inspected for leaks, (either visually or using a detector kit). Stringent control over all personnel practices must be exercised. Decontaminating equipment will be conveniently located. Exits must be designed to permit rapid evacuation. Chemical showers, eyewash stations, and personal cleanliness facilities must be provided. Wash hands before meals and shower thoroughly with special attention given to hair, face, neck, and hands using plenty of soap and water before leaving at the end of the workday.

Other Precautions: L should be stored in containers made of glass for Research, Development, Test and Evaluation (RDTE) quantities or one-ton steel containers for large quantities. Agent will be stored in a single containment system within a laboratory hood or in a double containment system.

For additional information see "AR 385-10, The Army Safety Program," "DA Pam 385-61, Toxic Chemical Agent Safety Standards," and "DA Pam 40-173, Occupational Health Guidelines for the Evaluation and Control of Occupational Exposure to Mustard Agents H, HD, and HT".

Section VIII - Exposure control/personal protection

Concentration	Respiratory Protective Equipment
< 0.003 mg/m^3	A CBRN NIOSH approved full face piece, chemical canister air-purifying, protective masks will be on hand for escape. The M-40 series protective masks are acceptable for this use.
> or = 0.003 mg/m^3	CBRN NIOSH approved Air Supply Line with Full Face Respirator and Auxiliary Self-contained Breathing Apparatus (SCBA), or SCBA. (See DA Pam 386-61 for examples)

Ventilation

Local Exhaust: Mandatory. Must be filtered or scrubbed to limit exit concentrations. Air emissions shall meet local, state and federal regulations.

Special: Chemical laboratory hoods will have an average inward face velocity of 100 linear feet per minute (lfpm) +/- 20% with the velocity at any point not deviating from the average face velocity by more than 20%. Existing laboratory hoods will have an inward face velocity of 150-lfpm +/- 20%. Laboratory hoods will be located such that cross drafts do not exceed 20% of the inward face velocity. A visual performance test using smoke producing devices will be performed in assessing the ability of the hood to contain Lewisite.

Other: Recirculation of exhaust air from agent areas is prohibited. No connection between agent area and other areas through the ventilation system is permitted. Emergency backup power is necessary. Hoods should be tested semiannually or after modification or maintenance operations. Operations should be performed 20 centimeters inside hoods.

Protective Gloves: Butyl Rubber gloves M3 and M4
Norton, Chemical Protective Glove Set

Eye Protection: As a minimum, safety glasses with side shields will be worn. For splash hazards use goggles and face shield. Maintain eyewash facilities in work area.

Other Protective Equipment: For laboratory operations, wear lab coats, gloves and have mask readily accessible. In addition, daily clean smocks, foot covers, and head covers will be required when handling contaminated lab animals. In the case of a spill, the minimum protective clothing should be Level B after the site has been evaluated, otherwise Level A.

Monitoring: Available monitoring equipment for agent L is the M18A2 (yellow band), bubblers (arsenic and GC method), M256 and A1 Kits, and the Miniature Chemical Agent Monitor (MINICAM).

Real-time, low-level monitors (with alarm) are required for L operations. In their absence, an Immediately Dangerous to Life and Health (IDLH) atmosphere must be presumed. Laboratory operations conducted in appropriately maintained and alarmed engineering controls require only periodic low-level monitoring.

Section IX - Physical and Chemical Properties

Boiling Point: 196 ºC (384.8 ºF)

Vapor Pressure (torr): 0.563 @ 25 ºC

Vapor Density (relative to air): 7.1

Solubility: Lewisite on contact with water or moist surfaces immediately hydrolyzes to form lewisite oxide (solid), which dissolves very slowly in water. Readily soluble in common organic solvents, oils and chemical warfare agents.

Specific Gravity (H_20=1): 1.891 @ 20 ºC

Freezing/Melting Point (ºC): -44.7 to -1.8 ºC (Depending on purity)

Liquid Density (g/mL): 1.8793 @ 25 ºC

Volatility (mg/m^3): 3,860 @ 25 ºC; 330 @ 0 ºC

Viscosity (CENTIPOISE): 2.257 @ 20 ºC

Molecular Weight (g/mol): 207.32

Appearance And Odor: Brown liquid; colorless when pure. A characteristic odor is usually geranium-like; odorless when pure.

Odor threshold: Not available

Flashpoint: Nonflammable

Flammability Limits (% by volume): Not Available

Lower Explosive Limit: Not Available

Upper Explosive Limit: Not Available

Autoignition Temperature: Not Available

Decomposition Temperature: At 149 ºC 0.5 % of L is destroyed and at 493 ºC greater than 99.99% of L is destroyed.

pH: Not Available

Initial boiling point and boiling range: Not Available

Evaporation rate: Not Available

Partition coefficient: n-octanol/water: Not Available

Section X - Stability and Reactivity

Stability: Fairly stable in glass and steel containers, but decomposes considerably upon denotation. Alkalis decompose L at ambient temperatures.

Rate of Hydrolysis: Rapid.

Hydrolysis Products: 2-Chlorovinylarsonous acid (CVAA), 2-chlorovinylarsenious oxide (lewisite oxide) and hydrochloric acid.

Action on Metals and Other Materials: None if dry; corrosive penetration on steel is 0.00001 to 0.00005 in./month @ 65 ºC. Extremely corrosive on aluminum and aluminum alloys.

Hazardous Polymerization: Does not occur.

Section XI - Toxicological Information

Airborne Exposure Limit (AEL): The permissible airborne exposure concentration of L for an 8-hour workday or

a 40-hour workweek is an 8-hour time weighted average (TWA) of 0.003 mg/m^3 as a ceiling value. A ceiling value may not be exceeded at anytime. The ceiling value for Lewisite is based upon the present technologically feasible detection limits of 0.003 mg/m^3. This value can be found in "DA Pam 40-173, Occupational Health Guidelines for the Evaluation and Control of Occupational Exposure to Mustard H, HD, and HT." To date, however, the Occupational Safety and Health Administration (OSHA) have not promulgated permissible exposure concentration for L.

Routes of Entry: The routes of entry for L are inhalation and ingestion, as well as eye and skin contact.

Effects of Exposure: L is a vesicant (causing blisters). Also, it acts as a systemic poison, causing pulmonary edema, diarrhea, restlessness, weakness, subnormal temperature, and low blood pressure. L is not detoxified by the body.

L is generally considered a suspect carcinogen because of its arsenic content.

Signs and Symptoms: The acute signs and symptoms following L exposure occur more quickly than those following exposure to mustard type agents. Contact to the skin with liquid L is immediately painful, and L is absorbed more promptly than mustard type agents.

Mild ocular (eye) symptoms to L are thought to parallel those for HD and include immediate pain, inflammation, conjunctivitis possibly with lacrimation, grittiness in the eye, and erythema (reddening) of the lids and conjunctiva. Severe symptoms include blepharospasm, pain, corneal erosion, iritis, ulceration and blindness.

Skin exposure to L is marked by stinging pain which increases in severity over time. Mild symptoms include erythema, edema, itching, burning and pain. Severe symptoms include vesication or blisters. Erythema appears within 30 minutes after exposure accompanied by pain with itching and irritation for 24 hours. Blisters appear within 12 hours after exposure with more pain that diminishes after 2-3 days. Skin burns are much deeper than with mustard type agents.

Inhalation of L is irritating to nasal passages and produces a burning sensation followed by profuse nasal secretions and violent sneezing. Prolonged exposure causes coughing and production of large quantities of froth mucus. In experimental animals, injury to respiratory tracts, due to vapor exposure is similar to mustards; however, edema of the lung is more marked and frequently accompanied by pleural fluid.

Systemic Effects: L on the skin and inhaled vapor, cause systemic poisoning. A manifestation of this is a change in capillary permeability, which permit's loss of sufficient fluid from the bloodstream to cause hemoconcentration, shock and death. In nonfatal cases, hemolysis of erythrocytes has occurred with a resultant hemolytic anemia. The excretion of oxidized products into the bile by the liver produces focal necrosis of that organ, necrosis of the mucosa of the biliary passages with periobiliary hemorrhages, and some injury to the intestinal mucosa. Acute systematic poisoning from large skin burns cause's pulmonary edema, diarrhea restlessness, weakness, subnormal temperature, and low blood pressure in animals.

Chronic Exposure: Lewisite can cause sensitization and chronic lung impairment.

Toxicity Estimates[1]:

<u>Vapor (Inhalation/Ocular)</u>
ECt50 (Mild) = 25 mg-min/m^3
ECt50 (Severe)[2] = 75 mg-min/m^3
LCt50 = 1000 mg-min/m^3

<u>Vapor (Percutaneous)[3,4]</u>
ECt50 (Mild) = 50 mg-min/m^3
ECt50 (Severe)[2] = 500 mg-min/m^3

LCt50 = 5000 - 10000 mg-min/m^3

Liquid (Percutaneous)
ED50 (Severe) = 600 mg/70 kg man
LD50 = 1400 mg/70 kg man

---

[1] Data for L are limited and toxicity estimates are based upon HD, as applicable. Estimates for inhalation vapor exposure are based on a minute volume (MV) of 15 liters. The exposure time is 2 minutes. The concentration-time profiles are unknown.
[2] Based on ocular (eye) effects.
[3] Personnel are masked.
[4] Values for percutaneous vapor are for moderate temperatures (85 ^{o}F and below). The effective dosages for hot temperatures (85 ^{o}F and above) will be less by at least a factor of 2.

Section XII - Ecological information

Persistence and degradability: Not Available

Bioaccumulative potential: Not Available

Mobility in soil: Not Available

Results of PBT and vPvB assessment: Not Available

Other adverse effects: Not Available

Section XIII - Disposal considerations

Recommended Field Procedures: Lewisite should be contained using vermiculite, diatomaceous earth, clay, or fine sand and neutralized as soon as possible using copious amounts of alcoholic caustic or carbonate. Caution must be exercised when using these decontaminates since acetylene will be given off. Household bleach can also be used if accompanied by stirring to allow contact. Scoop up all material and place in a DOT approved container. Cover the contents with decontaminating solution as above. After sealing, the exterior of the container will be decontaminated and labeled according to EPA and DOT regulations. All leaking containers will be over packed with sorbent (e.g. vermiculite) placed between the interior and exterior containers. Dispose of decontaminate according to Federal, state, and local laws. Conduct general area monitoring to confirm that the atmospheric concentrations do not exceed the airborne exposure limits (See Sections XI and VIII).

Leaking munitions should be processed in accordance with established chemical demilitarization SOPs, see "DA Pam 385-61, Toxic Chemical Agent Safety Standards".

Recommended Laboratory Procedures: Prepare a 10 wt% alcoholic sodium hydroxide solution by adding 100 grams of denatured ethanol to 900 grams of 10 wt% NaOH in water. A minimum of 200 grams of decontamination solution is required per gram of L. The decontamination and agent solution must be agitated for a minimum of one hour. At the end of the hour the resulting pH should be checked and adjusted to above 11.5 using additional NaOH, if required.

10 wt% alcoholic sodium carbonate or 5.25% bleach may be substituted for NaOH. Reaction time should be increased to 3-hours with agitation for the first hour. Final pH should be adjusted to above 11.5.

Scoop up all material and place in an approved DOT container. Cover the contents with decontaminating solution as above. The exterior of the container will be decontaminated and labeled according to EPA and DOT regulations. All

leaking containers will be over packed with sorbent (e.g. vermiculite) placed between the interior and exterior containers. Decontaminate and label according to EPA and DOT regulations. Dispose of the material in accordance with waste disposal methods provided below. Conduct general area monitoring with an approved monitor to confirm that the atmospheric concentrations do not exceed the airborne exposure limits (See Sections XI and VIII).

Waste Disposal Method: Due to the arsenic content, all waste L, and associated decontamination solutions, should be disposed IAW the Resource Conservation Recovery Act (RCRA) regulations.

Section XIV - Transport information

NOTE: Forbidden for transport other than via military (Technical Escort Unit) transport according to 49 CFR Part 173.7(b), DOD 4500.9-R and AR 50-6.

Proper Shipping Name: Toxic by inhalation liquid, n.o.s. (Dichloro- (2-chlorovinyl) arsine)

UN ID Number: UN3381

DOT Hazard Class: 6.1, Packing Group I, Inhalation Hazard Zone A

DOT Label: Poison Inhalation Hazard or Toxic Inhalation Hazard. See 49 CFR 172.400a(a)(3) for exceptions to unit packaging labeling and 173.7(b) for other exceptions when material is transported by Technical Escort Units.

NOTE: "Poison" and "Toxic" are used interchangeably for all markings, labels and placards in continental US transportation. "Toxic" is required for international transportation.

DOT Marking: Toxic by inhalation liquid, n.o.s. (Dichloro- (2-chlorovinyl) arsine) UN3381, Inhalation Hazard Zone A

DOT Placard: Poison Inhalation Hazard or Toxic Inhalation Hazard

Emergency Accident Precautions And Procedures: See Sections V, VI, VIII, and XIII.

Precautions To Be Taken In Transportation: Motor vehicles will be placarded regardless of quantity. Drivers will be given full information regarding shipment and conditions in case of an emergency. AR 50-6 deals specifically with the shipment of chemical agents.

Section XV - Regulatory information

No applicable information was found.

Section XVI - Other information

Preparation Information:
U.S. Army Edgewood Chemical Biological Center (ECBC)
ATTN: RDCB-DPC-RH
Aberdeen Proving Ground, MD 21010-5424
Business Phone: 410-436-4411 or 4414, Monday through Friday during the hours of 8:00 AM to 4:30 PM EDT

Revised: 29 May 2015

The Edgewood Chemical Biological Center (ECBC), Department of the Army believes that the data contained herein are actual and are the results of the tests conducted by ECBC experts. The data is not to be taken as a warranty or representation for which the Department of the Army or ECBC assumes legal responsibility. This information is offered solely for consideration. Any use of this data and information contained in this SDS must be determined by the user to be in accordance with applicable Federal, State, and local laws and regulations.

*** CHEMICAL IDENTIFICATION ***

RTECS NUMBER : CG9900000
CHEMICAL NAME : Arsine, chlorodiphenyl
CAS REGISTRY NUMBER : 712-48-1
BEILSTEIN REFERENCE NO. : 2937168
REFERENCE : 3-16-00-00944 (Beilstein Handbook Reference)
LAST UPDATED : 199612
DATA ITEMS CITED : 8
MOLECULAR FORMULA : C12-H10-As-Cl
MOLECULAR WEIGHT : 264.59
WISWESSER LINE NOTATION : G-AS-R&R
COMPOUND DESCRIPTOR : Organometallic
Human
SYNONYMS/TRADE NAMES :
* Arsinous chloride, diphenyl-
* Blue cross
* Chlor-difenylarsin
* Chlorodiphenylarsine
* Clark I
* Difenylchlorarsin
* Diphenylarsinous chloride
* Diphenylchloorarsine
* Diphenylchloroarsine
* Sneezing gas

*** HEALTH HAZARD DATA ***

** ACUTE TOXICITY DATA **

TYPE OF TEST : LCLo - Lowest published lethal concentration
ROUTE OF EXPOSURE : Inhalation
SPECIES OBSERVED : Human
DOSE/DURATION : 55 ppm/30M
TOXIC EFFECTS :
Details of toxic effects not reported other than lethal dose value
REFERENCE :
NTIS** National Technical Information Service. (Springfield, VA 22161)
Formerly U.S. Clearinghouse for Scientific & Technical Information.
Volume(issue)/page/year: PB214-270

TYPE OF TEST : LCLo - Lowest published lethal concentration
ROUTE OF EXPOSURE : Inhalation
SPECIES OBSERVED : Mammal - dog
DOSE/DURATION : 200 gm/m3/50M
TOXIC EFFECTS :
Lungs, Thorax, or Respiration - other changes
Gastrointestinal - changes in structure or function of salivary glands
Gastrointestinal - nausea or vomiting
REFERENCE :
ZGEMAZ Zeitschrift fuer die Gesamte Experimentelle Medizin. (Berlin, Fed. Rep. Ger.) V.1-139, 1913-65. For publisher information, see REXMAS.
Volume(issue)/page/year: 13,523,1921

TYPE OF TEST : LCLo - Lowest published lethal concentration
ROUTE OF EXPOSURE : Inhalation
SPECIES OBSERVED : Mammal - cat

DOSE/DURATION : 50 gm/m3/12M
TOXIC EFFECTS :
Sense Organs and Special Senses (Eye) - effect, not otherwise specified
Gastrointestinal - changes in structure or function of salivary glands
REFERENCE :
ZGEMAZ Zeitschrift fuer die Gesamte Experimentelle Medizin. (Berlin, Fed. Rep. Ger.) V.1-139, 1913-65. For publisher information, see REXMAS. Volume(issue)/page/year: 13,523,1921

TYPE OF TEST : LDLo - Lowest published lethal dose
ROUTE OF EXPOSURE : Subcutaneous
SPECIES OBSERVED : Mammal - cat
DOSE/DURATION : 500 ug/kg
TOXIC EFFECTS :
Lungs, Thorax, or Respiration - acute pulmonary edema
REFERENCE :
ZGEMAZ Zeitschrift fuer die Gesamte Experimentelle Medizin. (Berlin, Fed. Rep. Ger.) V.1-139, 1913-65. For publisher information, see REXMAS. Volume(issue)/page/year: 13,523,1921

*** U.S. STANDARDS AND REGULATIONS ***

OSHA PEL (Gen Indu):8H TWA 0.5 mg(As)/m3
CFRGBR Code of Federal Regulations. (U.S. Government Printing Office, Supt. of Documents, Washington, DC 20402) Volume(issue)/page/year: 29,1910.1000,1994

OSHA PEL (Construc):8H TWA 0.5 mg(As)/m3
CFRGBR Code of Federal Regulations. (U.S. Government Printing Office, Supt. of Documents, Washington, DC 20402) Volume(issue)/page/year: 29,1926.55,1994

OSHA PEL (Shipyard):8H TWA 0.5 mg(As)/m3
CFRGBR Code of Federal Regulations. (U.S. Government Printing Office, Supt. of Documents, Washington, DC 20402) Volume(issue)/page/year: 29,1915.1000,1993

OSHA PEL (Fed Cont):8H TWA 0.5 mg(As)/m3
CFRGBR Code of Federal Regulations. (U.S. Government Printing Office, Supt. of Documents, Washington, DC 20402) Volume(issue)/page/year: 41,50-204.50,1994

*** END OF RECORD ***

PHENYLDICHLOROARSINE

UN 1556

Shipping Name: Arsenic compound, liquid, n.o.s.
Other Names: Dichlorophenylarsine
Phenylarsine dichloride
TL 69

WARNING!
- POISON! BREATHING THE VAPOR, SWALLOWING THE MATERIAL OR SKIN CONTACT CAN KILL YOU! SKIN AND EYE CONTACT CAUSES SEVERE BURNS AND BLINDNESS!
- Firefighting gear (including SCBA) provides NO protection. If exposure occurs, remove and isolate gear immediately and thoroughly decontaminate personnel

Hazards:
- Vapors are heavier than air and will collect and stay in low areas
- Container may BLEVE when exposed to fire
- Combustion products include toxic fumes of arsine and hydrogen chloride

Awareness and Operational Level Training Response:
- DO NOT ATTEMPT RESCUE!
- Stay upwind and uphill
- Determine the extent of the problem
- BACK OFF! - Isolate a wide area around the release or fire, deny entry and call for expert help
- For container exposed to fire evacuate the area in all directions because of the risk of BLEVE
- Evacuate or shelter in place the immediate area and downwind for a large release
- Notify local health and fire officials and pollution control agencies
- If material or contaminated runoff enters waterways, notify downstream users of potentially contaminated water

Description:
- Colorless to yellow liquid
- Weak, but very unpleasant odor
- Sinks in water and is insoluble in water
- Reacts slowly with water to form toxic hydrochloric acid
- Flammable
- Vapors are heavier than air and will collect and stay in low areas
- Freezes at -4° F

Operational Level Training Response:

RELEASE, NO FIRE:
- Stop the release if it can be done safely from a distance
- Prevent material and runoff from entering sewers and waterways if it can be done safely well ahead of the release
- Use large amounts of water to disperse vapors - contain runoff
- Consider the application of foam to large areas of spilled liquid to control vapors
- Ventilate confined area if it can be done without placing personnel at risk
- If in a building, evacuate building and confine vapors by closing doors and shutting down HVAC systems

FIRE:
- Approach fire with extreme caution; consider letting fire burn
- Material does not easily burn; fight surrounding fire with an agent appropriate for the burning material
- Cool exposed containers with large quantities of water from unattended equipment or remove intact containers if it can be done safely
- If cooling streams are ineffective (unvented container distorts, bulges or shows any other signs of expanding), withdraw immediately to a secure location

First Aid:
- DO NOT ATTEMPT RESCUE!
- Provide Basic Life Support/CPR as needed
- Decontaminate the victim as follows:
  - Inhalation - remove the victim to fresh air and give oxygen if available
  - Skin - remove and isolate contaminated clothing (including shoes) and wash skin with soap and large volumes of water for 15 minutes
  - Eye - rinse eyes with large volumes of water or saline for 15 minutes
  - Swallowed - do not make the victim vomit
- Seek medical attention immediately
- Toxic effects may be delayed
- For skin burns decontaminate with water and apply a clean dry dressing
- Note to physician: if symptoms indicate, treatment is like that for arsine gas

CAS: 696-28-6

(This page intentionally left blank.)

U.S. Army Center for Health Promotion and Preventive Medicine

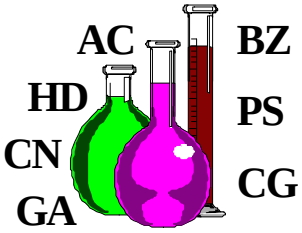

Detailed Facts About Tear Agent Chloracetophenone in Benzene and Carbon Tetrachloride (CNB)

218-21-1096

Physical Properties of Tearing Agent Chloroacetophenone in Benzene and Carbon Tetrachloride

Chemical Structure

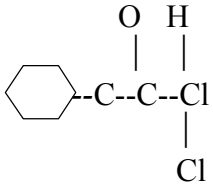

chloroacetophenone (CN)
(10 parts)

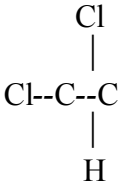

carbon tetrachloride (45 parts)

benzene (45 parts)

Chemical Formula

Chloroacetophenone (CN) - $C_6 H_5 COCH_2 Cl$
(10 parts by weight)
Carbon Tetrachloride - CCl_4
(45 parts by weight)
Benzene - $C_6 H_6$
(45 parts by weight)

Description

CNB is a slightly brown liquid smelling heavily of benzene. It has an immediate strong irritating effect on the eyes and respiratory tract. CNB is flammable.

Molecular Weight

119.7

Freezing Point

-7°C to -30°C

Agent CNB - The chemical mixture of chloroacetophenone in benzene and carbon tetrachloride. The Chemical Abstract Service Registry Number is not available.

Density	Liquid = 1.14 g/cc @ 20°C Vapor = approximately 4 (air = 1)
Solubility	No data available
Flash Point	Below 4.47°C; one of the main reasons CNB ceased to be used by police agencies.
Volatility	Benzene - 320,624 mg/m^3 @ 20°C 420,111 mg/m^3 @ 25°C Carbon Tetrachloride- 766,000 mg/m^3 @ 20°C

Toxicity Values ICt_{50} = 80 mg-min/m^3 LCt_{50} = 11,000 mg-min/m^3

(about the same as CN)

Exposure Limits

<u>Alpha-Chloroacetophenone (CN)</u>
Workplace Time-Weighted Average - 3 mg/m^3
General Population Limits - 0.32 mg/m^3

<u>Benzene</u>
Workplace Time-Weighted Average - 1 mg/m^3
General Population Limits - 32 ppm

<u>Carbon tetrachloride</u>
Workplace Time-Weighted Average - 2 mg/m^3
General Population Limits - 31 mg/m^3

Toxic Properties of Tear Agent Chloroacetophenone in Benzene and Carbon Tetrachloride

CNB was adopted in 1920 and remained in use until it was replaced by Chloroacetophenone and Chloropicrin in Chloroform. The advantages claimed for CNB was that its lower chloroacetophenone content made it more satisfactory than chloroacetophenone in chloroform (CNC) for training purposes.

Overexposure Effects

CNB is a formulation of chloroacetophenone. Like CN, CNB has a pronounced lacrimatory effect, resulting in a natural reflex to shut the eyes. It is similarly irritating to the skin, especially the face and such exposed portions of the body where sweat accumulates. CNB will penetrate clothing or adhere to it under long exposure due to its benzene component. The same rashes caused by CN will be caused by CNB. CNB has a slightly more powerful choking effect than CN. Eye toxicity remains about the same as CN. Some sensitive individuals may experience

nausea upon exposure. CNB can form lethal concentrations in closed or confined spaces, although concentrations in open areas are highly unlikely ever to do so.

Emergency and First Aid Procedures

Inhalation: remove the victim to fresh air immediately; perform artificial respiration if breathing has stopped; keep victim warm and at rest; seek medical attention immediately.

Eye Contact: wash eyes immediately with copious amounts of water, lifting the lower and upper lids occasionally; do not wear contact lenses when working with this chemical; seek medical attention immediately.

Skin Contact: wash the contaminated skin with soap or mild detergent and water immediately; remove the contaminated clothing immediately; wash the skin using soap or mild detergent and water; seek medical attention immediately when there are chemical burns or evidence of skin irritation.

Ingestion: induce vomiting by having victim touch the back of his throat with finger or by giving victim syrup of ipecac as directed; do not induce vomiting if victim is unconscious; seek medical attention immediately.

Decontamination: None needed in the field; wash contaminated surfaces with a 5 percent solution by weight of sodium hydroxide in 95 percent alcohol or with a mixture of 20 parts water and 80 parts carbitol (diethylene glycol).

Protective Equipment

Protective Gloves:	Wear impervious gloves.
Eye Protection:	Wear dust- and splash-proof safety goggles where there is any possibility of solid CNB or liquids containing CNB contacting the eyes; use appropriate protective mask.
Other:	Wear a complete set of protective clothing to include gloves and lab coat, apron, boots, plastic coveralls; other protective clothing and equipment should be available to prevent contact with skin or clothing; remove contaminated clothing immediately; do not wear clothing until it has been properly laundered.

Reactivity Data

Stability:	Adequate in storage.
Hydrolysis Rate:	None.
Hydrolysis Products:	None.
Corrosive Properties:	Very slight action on metals or other materials.

Persistency Short.

References

1. Code of Federal Regulations, Part 1910.1000, Title 29 (29 CFR 1910.1000), *Air Contaminants,* 1994.

2. Department of the Army Field Manual (DA FM) 3-9, *Potential Military Chemical/Biological Agents and Compounds,* 1990.

3. Department of the Army Technical Manual (DA TM) 3-250, *Storage, Shipment, Handling, and Disposal of Chemical Agents and Hazardous Chemicals,* 1969.

4. *The Merck Index, An Encyclopedia of Chemicals, Drugs, and Biologicals, Eleventh Edition,* Merck & Co., Inc., Rahway, New Jersey, 1989.

5. *Threshold Limit Values for Chemical Substances and Physical Agents and Biological Exposure Indices for 1995-1996,* American Conference of Governmental Industrial Hygienists (ACGIH), Cincinnati, Ohio.

6. U.S. Army Chemical Command Materiel Destruction Agency, *Site Monitoring Concept Study,* 15 September 1993.

For more information, contact:
Kenneth E. Williams
USACHPPM
Aberdeen Proving Ground, MD 21010-5422
Commercial (410) 436-2208, DSN: 584-2208
email: kwilliam@aeha1.apgea.army.mil

U.S. Army Center for Health Promotion and Preventive Medicine

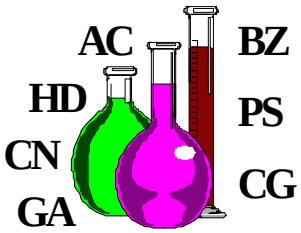

Detailed Facts About Tear Agent Chloroacetophenone and Chloropicrin in Chloroform (CNS)

218-20-1096

Physical Properties of Tearing Agent Chloroacetophenone and Chloropicrin in Chloroform

Chemical Structure

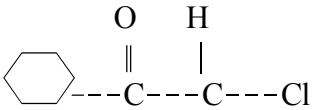

chloroacetophenone
(23.0%)

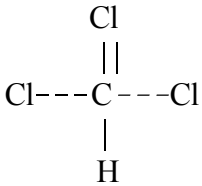

chloroform
(38.5%)

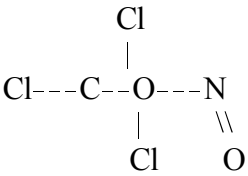

chloropicrin
(38.5%)

Chemical Formula

Chloroacetophenone (CN) - $C_6 H_5 COCH_2 Cl$
(23 percent)
Chloropicrin (PS) - $C(NO_2)C1_3$
(38.4 percent)
Chloroform - $CHC1_3$
(38.4 percent)

Description

CNS is a clear liquid smelling like flypaper; it has an immediately strong irritating effect on the eyes and respiratory tract. CNS may cause severe nausea.

Molecular Weight

141.78 (based on components)

Agent CNS - The chemical mixture of chloroacetophenone and chloropicrin in chloroform. Chemical Abstract Service Registry Number is not available.

Boiling Point	Begins at 60°C with chloroform and is complete with boiling of CN at 247°C.
Vapor Pressure (mm Hg)	78 @ 20°C
Freezing Point	2°C; this is the point at which crystals of CN separate and is not a true freezing point as in the case of a pure compound.
Density	Liquid = 1.47 g/cc @ 20°C Vapor = approximately 5.0 (air = 1)
Solubility	No data available.
Flash Point	None.
Volatility	605,000 mg/m^3 @ 20°C 900,500 mg/m^3 @ 30°C 1,620,000 mg/m^3 @ 50°C
Toxicity Values	ICt_{50} = 60 mg-min/m^3 LCt_{50} = 11,400 mg-min/m^3

Exposure Limits

<u>Alpha-Chloroacetophenone (CN)</u>

Workplace Time-Weighted Average -	0.3 mg/m^3
General Population Limits -	0.32 mg/m^3

<u>Chloropicrin</u>

Workplace Time-Weighted Average -	0.7 mg/m^3
General Population Limits -	0.67 mg/m^3

<u>Chloroform</u>

Workplace Time-Weighted Average -	240 mg/m^3
General Population Limits -	49 mg/m^3

Toxic Properties of Tear Agent Chloroacetophenone and Chloropicrin in Chloroform

CNS is a formulation of chloroacetophenone (CN). CNS was formulated not so much as a tear agent but as a vomiting agent. CNS was an American chemical warfare materiel developed after WWI; it has a mixture of 23 percent chloroacetophenone (CN), 38.4 percent chloropicrin (PS), and 38.4 percent chloroform.

Overexposure Effects

CNS is an example of multiple-component mixtures developed to achieve desired dissemination characteristics. Its hazards exist for inhalation, ingestion, and skin and eye exposure. It produces nausea within a minute of inhalation by a moderately sensitive person. If inhaled for longer periods, vomiting, colic (severe abdominal pains and cramps), and diarrhea are to be expected in its victims. Persons who are exposed to very large quantities of the vapors or liquid concentrations may suffer these symptoms for weeks. CNS is a non-lethal choking agent. It will cause the victims to gasp for air (thus inhaling more CNS) while causing discomfort to the bronchial tubes and lung sacs. CNS vapors may go into solution with sweat, making it a skin irritant, especially the face. If allowed to penetrate the clothing, CNS will cause stinging under the armpits, elbows, knees, and the area around the crotch and buttocks. Skin rashes may result after prolonged exposures. Prolonged eye exposure would not be recommended.

Emergency and First Aid Procedures

Inhalation: remove the victim to fresh air immediately; perform artificial respiration if breathing has stopped; keep victim warm and at rest; seek medical attention immediately.

Eye Contact: wash eyes immediately with copious amounts of water, lifting the lower and upper lids occasionally; do not wear contact lenses when working with this chemical; seek medical attention immediately.

Skin Contact: wash the contaminated skin with soap or mild detergent and water immediately; remove the contaminated clothing immediately, and wash the skin using soap or mild detergent and water; seek medical attention immediately when there are chemical burns or evidence of skin irritation.

Ingestion: induce vomiting by having victim touch the back of his throat with finger or by giving victim syrup of ipecac as directed; do not induce vomiting if victim is unconscious; seek medical attention immediately.

Protective Equipment

Protective Gloves:	Wear impervious gloves.
Eye Protection:	Wear dust- and splash-proof safety goggles where there is any possibility of solid CNB or liquids containing CNB contacting the eyes; wear appropriate protective mask.
Other:	Wear a complete set of protective clothing to include gloves and lab coat, apron, boots, plastic coveralls; other protective clothing and equipment should be available to prevent contact with skin or clothing; remove contaminated clothing immediately; do not wear clothing until it has been properly laundered.

Reactivity Data

Stability:	Stable in storage.
Hydrolysis Rate:	Does not readily hydrolyze.
Hydrolysis Products:	Hydrogen chloride and a hydroxyacetophenone.
Corrosive Properties:	Very little.
Persistency	Short.

References

1. Code of Federal Regulations, Part 1910.1000, Title 29 (29 CFR 1910.1000), *Air Contaminants,* 1994.

2. Department of the Army Field Manual (DA FM) 3-9, *Potential Military Chemical/Biological Agents and Compounds,* 1990.

3. *The Merck Index, An Encyclopedia of Chemicals, Drugs, and Biologicals, Eleventh Edition,* Merck & Co., Inc., Rahway, New Jersey, 1989.

4. *Threshold Limit Values for Chemical Substances and Physical Agents and Biological Exposure Indices for 1995-1996,* American Conference of Governmental Industrial Hygienists (ACGIH), Cincinnati, Ohio.

5. U.S. Army Chemical Command Materiel Destruction Agency, *Site Monitoring Concept Study*, 15 September 1993.

For more information, contact:
Kenneth E. Williams
USACHPPM
Aberdeen Proving Ground, MD 21010-5422
Commercial (410) 671-2208, DSN: 584-2208
email: kwilliam@aeha1.apgea.army.mil

SAFETY DATA SHEET

Version 4.17
Revision Date 01/20/2015
Print Date 03/09/2015

1. PRODUCT AND COMPANY IDENTIFICATION

1.1 Product identifiers

Product name	:	Titanium tetrachloride
Product Number	:	697079
Brand	:	Aldrich
Index-No.	:	022-001-00-5
CAS-No.	:	7550-45-0

1.2 Relevant identified uses of the substance or mixture and uses advised against

Identified uses : Laboratory chemicals, Manufacture of substances

1.3 Details of the supplier of the safety data sheet

Company : Sigma-Aldrich
3050 Spruce Street
SAINT LOUIS MO 63103
USA

Telephone : +1 800-325-5832
Fax : +1 800-325-5052

1.4 Emergency telephone number

Emergency Phone # : (314) 776-6555

2. HAZARDS IDENTIFICATION

2.1 Classification of the substance or mixture

GHS Classification in accordance with 29 CFR 1910 (OSHA HCS)
Acute toxicity, Inhalation (Category 2), H330
Skin corrosion (Category 1B), H314
Serious eye damage (Category 1), H318
Specific target organ toxicity - single exposure (Category 1), H370
Specific target organ toxicity - repeated exposure (Category 1), H372

For the full text of the H-Statements mentioned in this Section, see Section 16.

2.2 GHS Label elements, including precautionary statements

Pictogram

Signal word Danger

Hazard statement(s)

H314	Causes severe skin burns and eye damage.
H318	Causes serious eye damage.
H330	Fatal if inhaled.
H370	Causes damage to organs.
H372	Causes damage to organs through prolonged or repeated exposure.

Precautionary statement(s)

P260	Do not breathe dust/ fume/ gas/ mist/ vapours/ spray.
P264	Wash skin thoroughly after handling.
P270	Do not eat, drink or smoke when using this product.

P271	Use only outdoors or in a well-ventilated area.
P280	Wear protective gloves/ protective clothing/ eye protection/ face protection.
P284	Wear respiratory protection.
P301 + P330 + P331	IF SWALLOWED: Rinse mouth. Do NOT induce vomiting.
P303 + P361 + P353	IF ON SKIN (or hair): Remove/ Take off immediately all contaminated clothing. Rinse skin with water/ shower.
P304 + P340 + P310	IF INHALED: Remove victim to fresh air and keep at rest in a position comfortable for breathing. Immediately call a POISON CENTER or doctor/ physician.
P305 + P351 + P338 + P310	IF IN EYES: Rinse cautiously with water for several minutes. Remove contact lenses, if present and easy to do. Continue rinsing. Immediately call a POISON CENTER or doctor/ physician.
P307 + P311	IF exposed: Call a POISON CENTER or doctor/ physician.
P363	Wash contaminated clothing before reuse.
P403 + P233	Store in a well-ventilated place. Keep container tightly closed.
P405	Store locked up.
P501	Dispose of contents/ container to an approved waste disposal plant.

2.3 Hazards not otherwise classified (HNOC) or not covered by GHS

Reacts violently with water., Corrosive to the respiratory tract.
Lachrymator.

3. COMPOSITION/INFORMATION ON INGREDIENTS

3.1 Substances

Chemical characterization	:	Natural product
Synonyms	:	Titanium(IV) chloride Titanium tetrachloride TTC
Formula	:	Cl_4Ti
Molecular weight	:	189.68 g/mol
CAS-No.	:	7550-45-0
EC-No.	:	231-444-5
Index-No.	:	022-001-00-5

Hazardous components

Component	Classification	Concentration
Titanium tetrachloride		
	Acute Tox. 2; Skin Corr. 1B; Eye Dam. 1; STOT SE 1; STOT RE 1; H314, H318, H330, H370, H372	<= 100 %

For the full text of the H-Statements mentioned in this Section, see Section 16.

4. FIRST AID MEASURES

4.1 Description of first aid measures

General advice
Consult a physician. Show this safety data sheet to the doctor in attendance.Move out of dangerous area.

If inhaled
If breathed in, move person into fresh air. If not breathing, give artificial respiration. Consult a physician.

In case of skin contact
Take off contaminated clothing and shoes immediately. Wash off with soap and plenty of water. Take victim immediately to hospital. Consult a physician.

In case of eye contact
Rinse thoroughly with plenty of water for at least 15 minutes and consult a physician.Continue rinsing eyes during transport to hospital.

If swallowed
Do NOT induce vomiting. Never give anything by mouth to an unconscious person. Rinse mouth with water. Consult a physician.

4.2 Most important symptoms and effects, both acute and delayed
The most important known symptoms and effects are described in the labelling (see section 2.2) and/or in section 11

4.3 Indication of any immediate medical attention and special treatment needed
No data available

5. FIREFIGHTING MEASURES

5.1 Extinguishing media

Suitable extinguishing media
Dry powder

5.2 Special hazards arising from the substance or mixture
Hydrogen chloride gas, Titanium/titanium oxides

5.3 Advice for firefighters
Wear self-contained breathing apparatus for firefighting if necessary.

5.4 Further information
No data available

6. ACCIDENTAL RELEASE MEASURES

6.1 Personal precautions, protective equipment and emergency procedures
Wear respiratory protection. Avoid breathing vapours, mist or gas. Ensure adequate ventilation. Evacuate personnel to safe areas.
For personal protection see section 8.

6.2 Environmental precautions
Prevent further leakage or spillage if safe to do so. Do not let product enter drains.

6.3 Methods and materials for containment and cleaning up
Soak up with inert absorbent material and dispose of as hazardous waste. Do not flush with water. Keep in suitable, closed containers for disposal.

6.4 Reference to other sections
For disposal see section 13.

7. HANDLING AND STORAGE

7.1 Precautions for safe handling
Avoid contact with skin and eyes. Avoid inhalation of vapour or mist.
For precautions see section 2.2.

7.2 Conditions for safe storage, including any incompatibilities
Keep container tightly closed in a dry and well-ventilated place. Containers which are opened must be carefully resealed and kept upright to prevent leakage.
Never allow product to get in contact with water during storage.

Handle and store under inert gas. Moisture sensitive. Reacts violently with water.
Storage class (TRGS 510): Non-combustible, acute toxic Cat. 1 and 2 / very toxic hazardous materials

7.3 Specific end use(s)
Apart from the uses mentioned in section 1.2 no other specific uses are stipulated

8. EXPOSURE CONTROLS/PERSONAL PROTECTION

8.1 Control parameters

Components with workplace control parameters

Component	CAS-No.	Value	Control parameters	Basis
Titanium tetrachloride	7550-45-0	TWA	0.500000 mg/m3	USA. Workplace Environmental Exposure Levels (WEEL)

8.2 Exposure controls

Appropriate engineering controls
Avoid contact with skin, eyes and clothing. Wash hands before breaks and immediately after handling the product.

Personal protective equipment

Eye/face protection
Tightly fitting safety goggles. Faceshield (8-inch minimum). Use equipment for eye protection tested and approved under appropriate government standards such as NIOSH (US) or EN 166(EU).

Skin protection
Handle with gloves. Gloves must be inspected prior to use. Use proper glove removal technique (without touching glove's outer surface) to avoid skin contact with this product. Dispose of contaminated gloves after use in accordance with applicable laws and good laboratory practices. Wash and dry hands.

Full contact
Material: Nitrile rubber
Minimum layer thickness: 0.2 mm
Break through time: 480 min
Material tested:Dermatril® P (KCL 743 / Aldrich Z677388, Size M)

Splash contact
Material: Nitrile rubber
Minimum layer thickness: 0.11 mm
Break through time: 210 min
Material tested:Dermatril® (KCL 740 / Aldrich Z677272, Size M)

data source: KCL GmbH, D-36124 Eichenzell, phone +49 (0)6659 87300, e-mail sales@kcl.de, test method: EN374
If used in solution, or mixed with other substances, and under conditions which differ from EN 374, contact the supplier of the CE approved gloves. This recommendation is advisory only and must be evaluated by an industrial hygienist and safety officer familiar with the specific situation of anticipated use by our customers. It should not be construed as offering an approval for any specific use scenario.

Body Protection
Complete suit protecting against chemicals, Flame retardant protective clothing, The type of protective equipment must be selected according to the concentration and amount of the dangerous substance at the specific workplace.

Respiratory protection
Where risk assessment shows air-purifying respirators are appropriate use a full-face respirator with multi-purpose combination (US) or type ABEK (EN 14387) respirator cartridges as a backup to engineering controls. If the respirator is the sole means of protection, use a full-face supplied air respirator. Use respirators and components tested and approved under appropriate government standards such as NIOSH (US) or CEN (EU).

Control of environmental exposure
Prevent further leakage or spillage if safe to do so. Do not let product enter drains.

9. PHYSICAL AND CHEMICAL PROPERTIES

9.1 Information on basic physical and chemical properties

a)	Appearance	Form: liquid
b)	Odour	No data available
c)	Odour Threshold	No data available
d)	pH	No data available
e)	Melting point/freezing point	Melting point/range: -25 °C (-13 °F) - lit.
f)	Initial boiling point and	135 - 136 °C (275 - 277 °F) - lit.

	boiling range	
g)	Flash point	No data available
h)	Evaporation rate	No data available
i)	Flammability (solid, gas)	No data available
j)	Upper/lower flammability or explosive limits	No data available
k)	Vapour pressure	12.8 hPa (9.6 mmHg) at 20 °C (68 °F) 67 hPa (50 mmHg) at 55 °C (131 °F)
l)	Vapour density	No data available
m)	Relative density	1.73 g/cm3 at 20 °C (68 °F)
n)	Water solubility	insoluble
o)	Partition coefficient: n-octanol/water	No data available
p)	Auto-ignition temperature	No data available
q)	Decomposition temperature	No data available
r)	Viscosity	No data available
s)	Explosive properties	No data available
t)	Oxidizing properties	No data available

9.2 Other safety information
No data available

10. STABILITY AND REACTIVITY

10.1 Reactivity
No data available

10.2 Chemical stability
Stable under recommended storage conditions.

10.3 Possibility of hazardous reactions
Reacts violently with water.

10.4 Conditions to avoid
Exposure to moisture

10.5 Incompatible materials
Strong oxidizing agents, Water

10.6 Hazardous decomposition products
Other decomposition products - No data available
In the event of fire: see section 5

11. TOXICOLOGICAL INFORMATION

11.1 Information on toxicological effects

Acute toxicity
No data available

LC50 Inhalation - Rat - 1 h - 1,300 mg/m3

Dermal: No data available

No data available

Skin corrosion/irritation
Skin - Guinea pig
Result: Causes burns.

Serious eye damage/eye irritation
No data available

Respiratory or skin sensitisation
No data available

Germ cell mutagenicity
No data available

Carcinogenicity

IARC:	No component of this product present at levels greater than or equal to 0.1% is identified as probable, possible or confirmed human carcinogen by IARC.
ACGIH:	No component of this product present at levels greater than or equal to 0.1% is identified as a carcinogen or potential carcinogen by ACGIH.
NTP:	No component of this product present at levels greater than or equal to 0.1% is identified as a known or anticipated carcinogen by NTP.
OSHA:	No component of this product present at levels greater than or equal to 0.1% is identified as a carcinogen or potential carcinogen by OSHA.

Reproductive toxicity
No data available

No data available

Specific target organ toxicity - single exposure
Causes damage to organs.

Specific target organ toxicity - repeated exposure
Causes damage to organs through prolonged or repeated exposure.

Aspiration hazard
No data available

Additional Information

Repeated dose toxicity - Rat - male and female - Inhalation
RTECS: XR1925000

burning sensation, Cough, wheezing, laryngitis, Shortness of breath, spasm, inflammation and edema of the larynx, spasm, inflammation and edema of the bronchi, pneumonitis, pulmonary edema, Material is extremely destructive to tissue of the mucous membranes and upper respiratory tract, eyes, and skin.
To the best of our knowledge, the chemical, physical, and toxicological properties have not been thoroughly investigated.

Liver - Irregularities - Based on Human Evidence
Liver - Irregularities - Based on Human Evidence

12. ECOLOGICAL INFORMATION

12.1 Toxicity
No data available

12.2 Persistence and degradability
No data available

12.3 Bioaccumulative potential
No data available

12.4 Mobility in soil
No data available

12.5 Results of PBT and vPvB assessment
PBT/vPvB assessment not available as chemical safety assessment not required/not conducted

12.6 Other adverse effects

No data available

13. DISPOSAL CONSIDERATIONS

13.1 Waste treatment methods

Product
Offer surplus and non-recyclable solutions to a licensed disposal company. Contact a licensed professional waste disposal service to dispose of this material. Dissolve or mix the material with a combustible solvent and burn in a chemical incinerator equipped with an afterburner and scrubber.

Contaminated packaging
Dispose of as unused product.

14. TRANSPORT INFORMATION

DOT (US)
UN number: 1838 Class: 6.1 (8) Packing group: I
Proper shipping name: Titanium tetrachloride
Reportable Quantity (RQ): 1000 lbs

Poison Inhalation Hazard: Hazard zone B

IMDG
UN number: 1838 Class: 6.1 (8) Packing group: I EMS-No: F-A, S-B
Proper shipping name: TITANIUM TETRACHLORIDE

IATA
UN number: 1838 Class: 6.1 (8)
Proper shipping name: Titanium tetrachloride
IATA Passenger: Not permitted for transport
IATA Cargo: Not permitted for transport

15. REGULATORY INFORMATION

SARA 302 Components
The following components are subject to reporting levels established by SARA Title III, Section 302:

	CAS-No.	Revision Date
Titanium tetrachloride	7550-45-0	2007-07-01

SARA 313 Components
The following components are subject to reporting levels established by SARA Title III, Section 313:

	CAS-No.	Revision Date
Titanium tetrachloride	7550-45-0	2007-07-01

SARA 311/312 Hazards
Acute Health Hazard, Chronic Health Hazard

Massachusetts Right To Know Components

	CAS-No.	Revision Date
Titanium tetrachloride	7550-45-0	2007-07-01

Pennsylvania Right To Know Components

	CAS-No.	Revision Date
Titanium tetrachloride	7550-45-0	2007-07-01

New Jersey Right To Know Components

	CAS-No.	Revision Date
Titanium tetrachloride	7550-45-0	2007-07-01

California Prop. 65 Components
This product does not contain any chemicals known to State of California to cause cancer, birth defects, or any other reproductive harm.

16. OTHER INFORMATION

Full text of H-Statements referred to under sections 2 and 3.

Acute Tox.	Acute toxicity
Eye Dam.	Serious eye damage
H314	Causes severe skin burns and eye damage.
H318	Causes serious eye damage.
H330	Fatal if inhaled.
H370	Causes damage to organs.
H372	Causes damage to organs through prolonged or repeated exposure.
Skin Corr.	Skin corrosion
STOT RE	Specific target organ toxicity - repeated exposure
STOT SE	Specific target organ toxicity - single exposure

HMIS Rating

Health hazard:	4
Chronic Health Hazard:	*
Flammability:	0
Physical Hazard	2

NFPA Rating

Health hazard:	4
Fire Hazard:	0
Reactivity Hazard:	0

Further information

Copyright 2015 Sigma-Aldrich Co. LLC. License granted to make unlimited paper copies for internal use only.
The above information is believed to be correct but does not purport to be all inclusive and shall be used only as a guide. The information in this document is based on the present state of our knowledge and is applicable to the product with regard to appropriate safety precautions. It does not represent any guarantee of the properties of the product. Sigma-Aldrich Corporation and its Affiliates shall not be held liable for any damage resulting from handling or from contact with the above product. See www.sigma-aldrich.com and/or the reverse side of invoice or packing slip for additional terms and conditions of sale.

Preparation Information

Sigma-Aldrich Corporation
Product Safety – Americas Region
1-800-521-8956

Version: 4.17 Revision Date: 01/20/2015 Print Date: 03/09/2015

MATERIAL SAFETY DATA SHEET

Chlorosulfonic acid, 98%
00440

**** SECTION 1 - CHEMICAL PRODUCT AND COMPANY IDENTIFICATION ****

MSDS Name: Chlorosulfonic acid, 98%

Sulfuric Chlorohydrin; Sulfonic Acid, Monochloride.
Company Identification: Acros Organics N.V.
One Reagent Lane
Fairlawn, NJ 07410
For information in North America, call: 800-ACROS-01
For emergencies in the US, call CHEMTREC: 800-424-9300

**** SECTION 2 - COMPOSITION, INFORMATION ON INGREDIENTS ****

CAS#	Chemical Name	%	EINECS#
7790-94-5	CHLOROSULFONIC ACID	98	232-234-6

Hazard Symbols: T+ C
Risk Phrases: 14 35 37

**** SECTION 3 - HAZARDS IDENTIFICATION ****

EMERGENCY OVERVIEW

Appearance: not available.
Danger! May be fatal if swallowed. Harmful if inhaled. Corrosive.
Highly toxic. Hygroscopic. Lachrymator. Causes eye and skin burns.
Causes digestive and respiratory tract burns.
Target Organs: None.

Potential Health Effects

Eye:
Causes severe eye burns. Lachrymator.

Skin:
Causes skin burns.

Ingestion:
May be fatal if swallowed. Causes gastrointestinal tract burns.

Inhalation:
Harmful if inhaled. Causes chemical burns to the respiratory tract.
Chronic:
None

**** SECTION 4 - FIRST AID MEASURES ****

Eyes:
Immediately flush eyes with plenty of water for at least 15 minutes, occasionally lifting the upper and lower lids. Get medical aid immediately.
Skin:
Get medical aid immediately. Immediately flush skin with plenty of soap and water for at least 15 minutes while removing contaminated clothing and shoes. Wash clothing before reuse. Destroy contaminated shoes.
Ingestion:
Do NOT induce vomiting. If victim is conscious and alert, give 2-4 cupfuls of milk or water. Never give anything by mouth to an unconscious person. Get medical aid immediately.
Inhalation:
Remove from exposure to fresh air immediately. If not breathing, give artificial respiration. If breathing is difficult, give oxygen. Get medical aid. DO NOT use mouth-to-mouth respiration.
Notes to Physician:
Treat symptomatically and supportively.

**** SECTION 5 - FIRE FIGHTING MEASURES ****

General Information:
As in any fire, wear a self-contained breathing apparatus in pressure-demand, MSHA/NIOSH (approved or equivalent), and full protective gear. Containers may explode in the heat of a fire. Reacts violently with water. Vapors may be heavier than air. They can spread along the ground and collect in low or confined areas. Contact with metals may evolve flammable hydrogen gas.
Extinguishing Media:
If water is the only media available, use in flooding amounts. DO NOT USE WATER! Use dry chemical. Do NOT get water inside containers. Cool containers with flooding quantities of water until well after fire is out.
Autoignition Temperature: Not available.
Flash Point: Not available.
NFPA Rating: Not published.
Explosion Limits, Lower: 3.30 vol %
Upper: 37.70 vol %

**** SECTION 6 - ACCIDENTAL RELEASE MEASURES ****

General Information: Use proper personal protective equipment as indicated in Section 8.
Spills/Leaks:
Absorb spill with inert material, (e.g., dry sand or earth), then place into a chemical waste container. Neutralize spill with sodium bicarbonate. Provide ventilation. Do not expose spill to water. Do not get water inside containers.

**** SECTION 7 - HANDLING and STORAGE ****

Handling:
Wash thoroughly after handling. Wash hands before eating. Do not allow water to get into the container because of violent reaction. Do not breathe dust, vapor, mist, or gas. Do not get in eyes, on skin,

or on clothing. Use only in a chemical fume hood.

Storage:

Store in a cool, dry place. Store in a tightly closed container. Keep away from water. Corrosives area. Do not store in metal containers.

**** SECTION 8 - EXPOSURE CONTROLS, PERSONAL PROTECTION ****

Engineering Controls:

Use process enclosure, local exhaust ventilation, or other engineering controls to control airborne levels below recommended exposure limits. Use adequate ventilation to keep airborne concentrations low.

Exposure Limits

Chemical Name	ACGIH	NIOSH	OSHA - Final PELs
CHLOROSULFONIC ACID	none listed	none listed	none listed

OSHA Vacated PELs:

CHLOROSULFONIC ACID:

No OSHA Vacated PELs are listed for this chemical.

Personal Protective Equipment

Eyes:

Wear appropriate protective eyeglasses or chemical safety goggles as described by OSHA's eye and face protection regulations in 29 CFR 1910.133.

Skin:

Wear appropriate protective gloves to prevent skin exposure.

Clothing:

Wear a chemical apron. Wear appropriate protective clothing to prevent skin exposure.

Respirators:

Follow the OSHA respirator regulations found in 29CFR 1910.134. Always use a NIOSH-approved respirator when necessary.

**** SECTION 9 - PHYSICAL AND CHEMICAL PROPERTIES ****

Physical State:	Liquid
Appearance:	not available
Odor:	unpleasant odor
pH:	Not available.
Vapor Pressure:	1 mm Hg @ 32C
Vapor Density:	4
Evaporation Rate:	Not available.
Viscosity:	3 cP 16 deg C
Boiling Point:	151 - 152 deg C @ 7
Freezing/Melting Point:	-80 deg C
Decomposition Temperature:	> 151 deg C
Solubility:	reacts
Specific Gravity/Density:	1.7500g/cm3
Molecular Formula:	ClSO3H
Molecular Weight:	116.52

**** SECTION 10 - STABILITY AND REACTIVITY ****

Chemical Stability:

Stable under normal temperatures and pressures. Stable at room temperature in closed containers under normal storage and handling conditions. May decompose on exposure to moist air or water.

Conditions to Avoid:

Incompatible materials, moisture, contact with water, metals, combustible materials, organic materials, exposure to moist air or water.

Incompatibilities with Other Materials:

Acids, bases, alcohols, amines, finely powdered metals, plastics, rubber.

Hazardous Decomposition Products:

Hydrogen chloride, oxides of sulfur, irritating and toxic fumes and gases.

Hazardous Polymerization: Has not been reported

**** SECTION 11 - TOXICOLOGICAL INFORMATION ****

RTECS#:

CAS# 7790-94-5: FX5730000

LD50/LC50:

Not available.

Carcinogenicity:

CHLOROSULFONIC ACID -

Not listed by ACGIH, IARC, NIOSH, NTP, or OSHA.

Epidemiology:

No information available.

Teratogenicity:

No information available.

Reproductive Effects:

No information available.

Neurotoxicity:

No information available.

Mutagenicity:

No information available.

Other Studies:

No data available.

**** SECTION 12 - ECOLOGICAL INFORMATION ****

Ecotoxicity:

Not available.

Environmental Fate:

Not available.

Physical/Chemical:

Not available.

Other:

Not available.

**** SECTION 13 - DISPOSAL CONSIDERATIONS ****

Dispose of in a manner consistent with federal, state, and local regulations.
RCRA D-Series Maximum Concentration of Contaminants:
None listed.
RCRA D-Series Chronic Toxicity Reference Levels: None listed.
RCRA F-Series: None listed.
RCRA P-Series: None listed.
RCRA U-Series: None listed.
Not listed as a material banned from land disposal according to RCRA.

**** SECTION 14 - TRANSPORT INFORMATION ****

```
    US DOT
         Shipping Name: CHLOROSULFONIC ACID
                        POISON INHALATION HAZARD ZONE B
          Hazard Class: 8
             UN Number: UN1754
         Packing Group: I
    IMO
         Shipping Name: CHLOROSULPHONIC ACID (WITH OR WITHOUT SULPHUR TRIOXIDE)
                        XIDE)
          Hazard Class: 8
             UN Number: 1754
         Packing Group: I
    IATA
         Shipping Name: CHLOROSULPHONIC ACID
          Hazard Class: 8
             UN Number: 1754
         Packing Group:
    RID/ADR
         Shipping Name: CHLOROSULPHONIC ACID
  Dangerous Goods Code: 8(21A)
             UN Number: 1754
    Canadian TDG
         Shipping Name: CHLOROSULFONIC ACID
          Hazard Class: 8(9.2)
             UN Number: UN1754
```

**** SECTION 15 - REGULATORY INFORMATION ****

```
US FEDERAL
    TSCA
         CAS# 7790-94-5 is listed on the TSCA inventory.
       Health & Safety Reporting List
         None of the chemicals are on the Health & Safety Reporting List.
       Chemical Test Rules
         None of the chemicals in this product are under a Chemical Test Rule.
       Section 12b
         None of the chemicals are listed under TSCA Section 12b.
       TSCA Significant New Use Rule
         None of the chemicals in this material have a SNUR under TSCA.
    SARA
       Section 302 (RQ)
         final RQ = 1000 pounds (454 kg)
       Section 302 (TPQ)
         None of the chemicals in this product have a TPQ.
       SARA Codes
         CAS # 7790-94-5: acute, chronic, flammable, reactive.
       Section 313
         No chemicals are reportable under Section 313.
    Clean Air Act:
         This material does not contain any hazardous air pollutants.
         This material does not contain any Class 1 Ozone depletors.
         This material does not contain any Class 2 Ozone depletors.
    Clean Water Act:
         CAS# 7790-94-5 is listed as a Hazardous Substance under the CWA.
         None of the chemicals in this product are listed as Priority
         Pollutants under the CWA.
         None of the chemicals in this product are listed as Toxic Pollutants
         under the CWA.
    OSHA:
         None of the chemicals in this product are considered highly hazardous
         by OSHA.
STATE
    CHLOROSULFONIC ACID can be found on the following state right to know
```

lists: California, New Jersey, Florida, Pennsylvania, Minnesota, Massachusetts.
California No Significant Risk Level:
None of the chemicals in this product are listed.

European/International Regulations

European Labeling in Accordance with EC Directives

Hazard Symbols: T+ C

Risk Phrases:

R 14 Reacts violently with water.
R 35 Causes severe burns.
R 37 Irritating to respiratory system.

Safety Phrases:

S 26 In case of contact with eyes, rinse immediately with plenty of water and seek medical advice.
S 45 In case of accident of if you feel unwell, seek medical advice immediately (show the label where possible).

WGK (Water Danger/Protection)

CAS# 7790-94-5: 2

Canada

CAS# 7790-94-5 is listed on Canada's DSL/NDSL List.
This product has a WHMIS classification of C, E, F.
CAS# 7790-94-5 is not listed on Canada's Ingredient Disclosure List.

Exposure Limits

CAS# 7790-94-5:. OEL-UNITED KINGDOM:TWA 1 mg/m3

**** SECTION 16 - ADDITIONAL INFORMATION ****

MSDS Creation Date: 2/07/1996 Revision #3 Date: 1/21/1998

The information above is believed to be accurate and represents the best information currently available to us. However, we make no warranty of merchantability or any other warranty, express or implied, with respect to such information, and we assume no liability resulting from its use. Users should make their own investigations to determine the suitability of the information for their particular purposes. In no way shall Fisher be liable for any claims, losses, or damages of any third party or for lost profits or any special, indirect, incidental, consequential or exemplary damages, howsoever arising, even if Fisher has been advised of the possibility of such damages.

Back to product information.

MATERIAL SAFETY DATA SHEET

Sulfur trioxide, stabilized, 99+%
37575

**** SECTION 1 - CHEMICAL PRODUCT AND COMPANY IDENTIFICATION ****

MSDS Name: Sulfur trioxide, stabilized, 99+%

Sulfan(R), Sulfuric anhydride
Company Identification: Acros Organics N.V.
One Reagent Lane
Fairlawn, NJ 07410
For information in North America, call: 800-ACROS-01
For emergencies in the US, call CHEMTREC: 800-424-9300

**** SECTION 2 - COMPOSITION, INFORMATION ON INGREDIENTS ****

CAS#	Chemical Name	%	EINECS#
7446-11-9	Sulfur trioxide, 99%, stabilized		231-197-3

Hazard Symbols: C
Risk Phrases: 14 34

**** SECTION 3 - HAZARDS IDENTIFICATION ****

EMERGENCY OVERVIEW

Appearance: clear.
Hygroscopic.
Target Organs: None.

Potential Health Effects

Eye:
Contact with eyes may cause severe irritation, and possible eye burns.

Skin:
May cause severe irritation and possible burns.

Ingestion:
Not available.

Inhalation:

May cause severe irritation of the respiratory tract with sore throat, coughing, shortness of breath and delayed lung edema. Causes chemical burns to the respiratory tract.

Chronic:

Not available.

**** SECTION 4 - FIRST AID MEASURES ****

Eyes:

Immediately flush eyes with plenty of water for at least 15 minutes, occasionally lifting the upper and lower lids.

Skin:

Flush skin with plenty of soap and water for at least 15 minutes while removing contaminated clothing and shoes.

Ingestion:

Do NOT induce vomiting. Allow the victim to rinse his mouth and then to drink 2-4 cupfuls of water, and seek medical advice.

Inhalation:

Remove from exposure to fresh air immediately.

Notes to Physician:

Treat symptomatically and supportively.

**** SECTION 5 - FIRE FIGHTING MEASURES ****

General Information:

As in any fire, wear a self-contained breathing apparatus in pressure-demand, MSHA/NIOSH (approved or equivalent), and full protective gear.

Extinguishing Media:

Do NOT use water directly on fire. Use foam, dry chemical, or carbon dioxide.

Autoignition Temperature: Not available.
Flash Point: Not available.
NFPA Rating: Not published.
Explosion Limits, Lower: Not available.
Upper: Not available.

**** SECTION 6 - ACCIDENTAL RELEASE MEASURES ****

General Information: Use proper personal protective equipment as indicated in Section 8.

Spills/Leaks:

Absorb spill with inert material, (e.g., dry sand or earth), then place into a chemical waste container.

**** SECTION 7 - HANDLING and STORAGE ****

Handling:

Not available.

Storage:

Store at around 20ªC.

**** SECTION 8 - EXPOSURE CONTROLS, PERSONAL PROTECTION ****

Engineering Controls:

Use adequate general or local exhaust ventilation to keep airborne concentrations below the permissible exposure limits.

Exposure Limits

Chemical Name	ACGIH	NIOSH	OSHA - Final PELs
Sulfur trioxide, 99	none listed	none listed	none listed

```
| %, stabilized      |                   |                   |                 |
+--------------------+-------------------+-------------------+-----------------+

     OSHA Vacated PELs:
          Sulfur trioxide, 99%, stabilized:
             No OSHA Vacated PELs are listed for this chemical.

     Personal Protective Equipment

                Eyes:
                      Wear safety glasses and chemical goggles if splashing
                      is possible.
                Skin:
                      Wear appropriate protective gloves and clothing to
                      prevent skin exposure.
             Clothing:
                      Wear appropriate protective clothing to minimize
                      contact with skin.
          Respirators:
                      Wear a NIOSH/MSHA-approved (or equivalent)
                      full-facepiece airline respirator in the positive
                      pressure mode with emergency escape provisions.

             **** SECTION 9 - PHYSICAL AND CHEMICAL PROPERTIES ****

Physical State:             Not available.
Appearance:                 clear
Odor:                       None reported.
pH:                         Not available.
Vapor Pressure:             577 mbar @ 25 C
Vapor Density:              Not available.
Evaporation Rate:           Not available.
Viscosity:                  1.59 cP 30 deg
Boiling Point:              44.8 deg C @ 760.00mm Hg
Freezing/Melting Point:     16.8 deg C
Decomposition Temperature:  Not available.
Solubility:                 reacts violently with water
Specific Gravity/Density:   1.9200g/cm3
Molecular Formula:          O3S
Molecular Weight:           80.06

                  **** SECTION 10 - STABILITY AND REACTIVITY ****

     Chemical Stability:
          Stable under normal temperatures and pressures.
     Conditions to Avoid:
          Not available.
     Incompatibilities with Other Materials:
          Water - strong bases - metals - strong reducing agents.
     Hazardous Decomposition Products:
          Oxides of sulfur.
     Hazardous Polymerization: Has not been reported.

                **** SECTION 11 - TOXICOLOGICAL INFORMATION ****

     RTECS#:
          CAS# 7446-11-9: WT4830000
     LD50/LC50:
          Not available.
     Carcinogenicity:
       Sulfur trioxide, 99%, stabilized -
          Not listed by ACGIH, IARC, NIOSH, NTP, or OSHA.
```

**** SECTION 12 - ECOLOGICAL INFORMATION ****

Ecotoxicity:
Not available.

**** SECTION 13 - DISPOSAL CONSIDERATIONS ****

Dispose of in a manner consistent with federal, state, and local regulations.
RCRA D-Series Maximum Concentration of Contaminants:
None listed.
RCRA D-Series Chronic Toxicity Reference Levels: None
listed.
RCRA F-Series: None listed.
RCRA P-Series: None listed.
RCRA U-Series: None listed.
Not listed as a material banned from land disposal
according to RCRA.

**** SECTION 14 - TRANSPORT INFORMATION ****

US DOT
Shipping Name: SULFUR TRIOXIDE, INHIBITED
POISON INHALATION HAZARD ZONE B
Hazard Class: 8
UN Number: UN1829
Packing Group: I
IMO
Shipping Name: SULPHUR TRIOXIDE, INHIBITED
Hazard Class: 8
UN Number: 1829
Packing Group: I
IATA
Shipping Name: SULPHUR TRIOXIDE, INHIBITED
Hazard Class: 8
UN Number: 1829
Packing Group: I
RID/ADR
Shipping Name: SULPHUR TRIOXIDE, INHIBITED
Dangerous Goods Code: 8(1A)
UN Number: 1829
Canadian TDG
Shipping Name: SULFUR TRIOXIDE, INHIBITED
Hazard Class: 8(9.2)
UN Number: UN1829

**** SECTION 15 - REGULATORY INFORMATION ****

US FEDERAL
TSCA
CAS# 7446-11-9 is listed on the TSCA inventory.
Health & Safety Reporting List
None of the chemicals are on the Health & Safety Reporting List.
Chemical Test Rules
None of the chemicals in this product are under a Chemical Test Rule.
Section 12b
None of the chemicals are listed under TSCA Section 12b.
TSCA Significant New Use Rule
None of the chemicals in this material have a SNUR under TSCA.
SARA
Section 302 (RQ)
None of the chemicals in this material have an RQ.
Section 302 (TPQ)
CAS# 7446-11-9: TPQ = 100 pounds (This material is a reactive solid. T

Section 313
No chemicals are reportable under Section 313.

Clean Air Act:
This material does not contain any hazardous air pollutants.
This material does not contain any Class 1 Ozone depletors.
This material does not contain any Class 2 Ozone depletors.

Clean Water Act:
None of the chemicals in this product are listed as Hazardous Substances under the CWA.
None of the chemicals in this product are listed as Priority Pollutants under the CWA.
None of the chemicals in this product are listed as Toxic Pollutants under the CWA.

OSHA:
CAS# 7446-11-9 is considered highly hazardous by OSHA.

STATE
Sulfur trioxide, 99%, stabiliz can be found on the following state right to know lists: New Jersey, Pennsylvania, Massachusetts.
California No Significant Risk Level:
None of the chemicals in this product are listed.

European/International Regulations
European Labeling in Accordance with EC Directives
Hazard Symbols: C
Risk Phrases:
R 14 Reacts violently with water.
R 34 Causes burns.
Safety Phrases:
S 25 Avoid contact with eyes.
S 36/37/39 Wear suitable protective clothing, gloves and eye/face protection.
S 45 In case of accident of if you feel unwell, seek medical advice immediately (show the label where possible).
S 8 Keep container dry.

WGK (Water Danger/Protection)
CAS# 7446-11-9: 2

Canada
CAS# 7446-11-9 is listed on Canada's DSL/NDSL List.
This product does not have a WHMIS classification.
CAS# 7446-11-9 is not listed on Canada's Ingredient Disclosure List.

Exposure Limits
CAS# 7446-11-9:. OEL-CZECHOSLOVAKIA:TWA 1 mg/m3;STEL 2 mg/m3. OEL-FINLAND:STEL 1 ppm (3 mg/m3);Skin. OEL-HUNGARY:STEL 1 mg/m3. OEL-POLAND:TWA 1 mg/m3. OEL-RUSSIA:STEL 1 mg/m3;Skin

**** SECTION 16 - ADDITIONAL INFORMATION ****

MSDS Creation Date: 7/10/1993 Revision #2 Date: 9/02/1997

The information above is believed to be accurate and represents the best information currently available to us. However, we make no warranty of merchantability or any other warranty, express or implied, with respect to such information, and we assume no liability resulting from its use. Users should make their own investigations to determine the suitability of the information for their particular purposes. In no way shall Fisher be liable for any claims, losses, or damages of any third party or for lost profits or any special, indirect, incidental, consequential or exemplary damages, howsoever arising, even if Fisher has been advised of the possibility of such damages.

Back to product information.

ENSIGN-BICKFORD -- TETRYL
MATERIAL SAFETY DATA SHEET
NSN: 137500N026374
Manufacturer's CAGE: 0B2N1
Part No. Indicator: A
Part Number/Trade Name: TETRYL

==========

General Information

==========

Company's Name: ENSIGN-BICKFORD CO
Company's Street: 660 HOPMEADOW ST
Company's City: SIMSBURY
Company's State: CT
Company's Country: US
Company's Zip Code: 06070
Company's Emerg Ph #: 203-658-4411;203-843-2276
Company's Info Ph #: 203-658-4411;203-843-2276
Record No. For Safety Entry: 001
Tot Safety Entries This Stk#: 001
Status: SMJ
Date MSDS Prepared: 30APR91
Safety Data Review Date: 14FEB92
MSDS Preparer's Name: T.A. SHREVE
Preparer's Company: SAME
MSDS Serial Number: BMRQS
Hazard Characteristic Code: E2

==========

Ingredients/Identity Information

==========

Proprietary: NO
Ingredient: ANILINE, N-METHYL-N,2,4,6-TETRANITRO-; (TRINITRO-2,4,6-PHENYLMETHYLMITRAMINE)
Ingredient Sequence Number: 01
Percent: 100
NIOSH (RTECS) Number: BY6300000
CAS Number: 479-45-8
OSHA PEL: S, 1.5 MG/M3
ACGIH TLV: 1.5 MG/M3; 9293

Proprietary: NO
Ingredient: SUPP DATA:IT DOES NOT DETONATE, IT WILL BURN VIGOROUSLY. DEFLAGRATION TEMPERATURE IS 185C (365F).
Ingredient Sequence Number: 02
NIOSH (RTECS) Number: 9999999ZZ
OSHA PEL: NOT APPLICABLE
ACGIH TLV: NOT APPLICABLE

Proprietary: NO
Ingredient: SPILL PROC:FRICTION/IMPACT. PLACE MATL IN VELOSTAT BAG. CONTAM OF MATL W/SAND/DIRT/OTHER GRIT WILL RENDER IT MORE(ING 4)
Ingredient Sequence Number: 03
NIOSH (RTECS) Number: 9999999ZZ
OSHA PEL: NOT APPLICABLE
ACGIH TLV: NOT APPLICABLE

Proprietary: NO
Ingredient: ING 3:SENSITIVE TO DETONATION. IF POSS, SEPARATE ANY MATL THAT

APPEARS TO BE UNCONTAMD FROM MATL THAT APPEARS TO (ING 5)
Ingredient Sequence Number: 04
NIOSH (RTECS) Number: 9999999ZZ
OSHA PEL: NOT APPLICABLE
ACGIH TLV: NOT APPLICABLE

Proprietary: NO
Ingredient: ING 4:BE GRIT CONTAMD. STORE COLLECTED MATL FOR PROPER DISP.
Ingredient Sequence Number: 05
NIOSH (RTECS) Number: 9999999ZZ
OSHA PEL: NOT APPLICABLE
ACGIH TLV: NOT APPLICABLE

Proprietary: NO
Ingredient: WASTE DISP METH:LBLG/PACKAGING/STOR & TRANSPORTATION) MUST BE PERFOMRED I/A/W ALL APPLIC LOC/ST/FED LAWS & REGS. (ING 7)
Ingredient Sequence Number: 06
NIOSH (RTECS) Number: 9999999ZZ
OSHA PEL: NOT APPLICABLE
ACGIH TLV: NOT APPLICABLE

Proprietary: NO
Ingredient: ING 6:RECOM MET OF DISP OF WASTE EXPLO IS BY OPEN BURN/OPEN DETONATION. TETRYL MAY BE DESTROYED BY BOIL IN SOLN (ING 8)
Ingredient Sequence Number: 07
NIOSH (RTECS) Number: 9999999ZZ
OSHA PEL: NOT APPLICABLE
ACGIH TLV: NOT APPLICABLE

Proprietary: NO
Ingredient: ING 7:OF SODIUM CARBONATE. BY-PROD & SPECIFICS OF RXN ARE NOT AVAILABLE.
Ingredient Sequence Number: 08
NIOSH (RTECS) Number: 9999999ZZ
OSHA PEL: NOT APPLICABLE
ACGIH TLV: NOT APPLICABLE

Proprietary: NO
Ingredient: VENT:STRONGLY RECOMMENDED TO MINIMIZE EMPLOYEE EXPOSURE.
Ingredient Sequence Number: 09
NIOSH (RTECS) Number: 9999999ZZ
OSHA PEL: NOT APPLICABLE
ACGIH TLV: NOT APPLICABLE
==========

Physical/Chemical Characteristics

==========
Appearance And Odor: LIGHT YELLOW CRYSTALS.
Boiling Point: N/A
Melting Point: 265F,129C
Vapor Pressure (MM Hg/70 F): N/A
Vapor Density (Air=1): N/A
Evaporation Rate And Ref: NOT APPLICABLE
Solubility In Water: INSOLUBLE
Percent Volatiles By Volume: 100%
==========

Fire and Explosion Hazard Data

==========

Extinguishing Media: MEDIA SUITABLE FOR SURROUNDING FIRE (FP N).
Special Fire Fighting Proc: NIOSH/MSHA APPRVD SCBA & FULL PROT EQUIP(FP N). DO NOT FIGHT FIRES INVOLVING TETRYL! PROD IS PRIMARY (INITIATING) EXPLO & MAY DETONATE WHEN EXPOS TO (SUPP DATA)
Unusual Fire And Expl Hazrds: TETRYL IS PRIMARY(INITIATING) EXPLO. PROD IS LIKELY TO DETONATE WHEN EXPOS TO SHOCK/HEAT/IMPACT/SPARKS/FRICTION. PROD SHOULD BE HNDLD ONLY BY (SUPP DATA)

Reactivity Data

Stability: YES
Cond To Avoid (Stability): EXPOSURE TO SHOCK, SPARKS, PRESSURE, OR IMPACT MAY RESULT IN DETONATION.
Materials To Avoid: CARBON STEEL IS EASILY CORRODE BY TETRYL A SLIGHT CORROSION IS FOUND WITH ZINC AND ZINC PLATED STEEL.
Hazardous Decomp Products: THERMAL DECOMPOSITION MAY PRODUCE OXIDES OF CARBON & NITROGEN.
Hazardous Poly Occur: NO
Conditions To Avoid (Poly): NOT RELEVANT.

Health Hazard Data

LD50-LC50 Mixture: NONE SPECIFIED BY MANUFACTURER.
Route Of Entry - Inhalation: YES
Route Of Entry - Skin: NO
Route Of Entry - Ingestion: YES
Health Haz Acute And Chronic: EYE:MAY CAUSE IRRITATION, POSSIBLE EYE IRRITATION TO UPPER RESPIRATORY TRACT & POSSIBLE DEATH. INGEST:POISONING IS ACCOMPAINED BY FOLLOWING SYMPTOMS:LACK OF APPETITE, INSOMNIA, & GIDDINESS. SYMPTOMS USUALLY BEGIN AFTER 2-3 WEEKS OF BEING EXPOS TO TETRYL.
Carcinogenicity - NTP: NO
Carcinogenicity - IARC: NO
Carcinogenicity - OSHA: NO
Explanation Carcinogenicity: NOT RELEVANT.
Signs/Symptoms Of Overexp: SEE HEALTH HAZARDS.
Med Cond Aggravated By Exp: NONE SPECIFIED BY MANUFACTURER.
Emergency/First Aid Proc: EYE:FLUSH IMMED UNDER RUNNING WATER FOR AT LEAST 15 MIN, SEEK MED ATTN IMMED. SKIN:FLUSH IMMED UNDER RUNNING WATER FOR AT LEAST 15 MIN, SEEK MED ATTN IMMED. INHAL:GET VICTIM TO FRESH AIR. GIVE ARTF RESP IF BRTHG HAS STOPPED.SEEK MED ATTN IMMED. INGEST:INDUCE VOMIT IMMED BY STICKING FINGER DOWN THROAT. SEEK MED ATTN IMMED.

Precautions for Safe Handling and Use

Steps If Matl Released/Spill: ISOLATE SPILL AREA, KEEP ALL SOURCES OF IGNIT AWAY FROM SPILL & EVACUATE ALL NONESSENTIAL PERS TO SAFE DISTANT LOCATION. REMOVE ALL EXPLO THAT WERE NOT INVOLVED IN SPILL FROM SPILL AREA. CAREFULLY COLLECT SPILLED MATL, AVOID ANY EXCESS (ING 3)
Neutralizing Agent: NONE SPECIFIED BY MANUFACTURER.
Waste Disposal Method: WASTE TETRYL IS HAZ WASTE AS DEFINED UNDER RESOURCE CONSERVATION & RECOVERY ACT (RCRA) REGS, & MUST BE DISP OF @ PROPERLY PERMITTED TRTMT/STOR/DISP FACILITY (TSD). WASTE TETRYL DISP & ALL RELATED, REGULATED ACTIVITIES (INCL BUT NOT LIM TO (ING 6)
Precautions-Handling/Storing: HNDLE & STORE I/A/W ALL APPLICABLE FED, ST & LOCAL REGULATIONS AND INDUSTRY PRACTICES GOVERNING CLASS A PRIMARY (INITIATING) EXPLOSIVES.
Other Precautions: NONE.

==========

Control Measures

==========

Respiratory Protection: NIOSH/MSHA APPROVED DUST RESPIRATOR SHOULD BE WORN WHEN HANDLING TETRYL.
Ventilation: LOC EXHAUST:STRONGLY RECOM TO MINIMIZE EMPLOYEE EXPOS. SPECIAL:TETRYL DUST IS POISONOUS. MECH:EXHAUST VENT (ING 9)
Protective Gloves: BUTYL RUBBER GLOVES.
Eye Protection: CHEMICAL WORKERS GOGGLES (FP N).
Other Protective Equipment: COTTON COVERALLS (ANTISTATIC) WHICH WILL PROTECT AGAINST POWDER SPLASHES; SHOULD BE REPLACED WHEN CONTAMINATED.
Work Hygienic Practices: NONE SPECIFIED BY MANUFACTURER.
Suppl. Safety & Health Data: FIRE FIGHT PROC:HEAT/FLAMES.DO NOT ATTEMPT TO FIGHT TETRYL FIRES!ISOLATE AFFECTED AREA & EVACUATE ALL PERS TO DISTANT, SAFE AREA.EXPLO HAZ:QUALIFIED INDIVIDUALS WHO ARE THORO FAMILIAR W/PROPER EXPLO HNDLG PROC.HAZ GASES (NITROGEN OXIDES, NO*X'S)MAY BE REL WHEN TETRYL BURNS/DETONATES.IF TETRYL IS EXPOS TO FIRE & (ING 2)

==========

Transportation Data

==========

Trans Data Review Date: 92134
DOT PSN Code: EEL
DOT Proper Shipping Name: CYCLOTETRAMETHYLENETETRANITRAMINE, WETTED OR HMX, WETTED OR OCTOGEN, WETTED
DOT Class: 1.1D
DOT ID Number: UN0226
DOT Pack Group: II
DOT Label: EXPLOSIVE 1.1D
IMO PSN Code: ONJ
IMO Proper Shipping Name: TETRYL
IMO Regulations Page Number: 1112
IMO UN Number: 0208
IMO UN Class: 1.1 D
IMO Subsidiary Risk Label: -
IATA PSN Code: YXR
IATA UN ID Number: 0208
IATA UN Class: 1.1D
AFI PSN Code: YXR
AFI Prop. Shipping Name: TRINITROPHENYLMETHYLNITRAMINE OR TETRYL
AFI Class: 1.1D
AFI ID Number: UN0208
AFI Pack Group: II
AFI Basic Pac Ref: 5-116

==========

Disposal Data

==========

==========

Label Data

==========

Label Required: YES
Technical Review Date: 14FEB92
Label Date: 11FEB92
Label Status: G
Common Name: TETRYL
Chronic Hazard: NO
Signal Word: DANGER!
Acute Health Hazard-Moderate: X

Contact Hazard-Moderate: X
Fire Hazard-None: X
Reactivity Hazard-Severe: X
Special Hazard Precautions: ACUTE: INHALATION CAN CAUSE IRRITATION TO UPPER RESPIRATORY TRACT AND POSSIBLE DEATH. SWALLOWING CAN CAUSE LACK OF APPETITE, INSOMNIA, AND GIDDINESS. MAY CAUSE EYE IRRITATION, POSSIBLE EYE DAMAGE. SKIN MAY TURN YELLOW AND DERMATITIS MAY DEVELOP UPON CONTACT. CHRONIC: NONE LISTED BY MANUFACTURER.
Protect Eye: Y
Protect Skin: Y
Protect Respiratory: Y
Label Name: ENSIGN-BICKFORD CO
Label Street: 660 HOPMEADOW ST
Label City: SIMSBURY
Label State: CT
Label Zip Code: 06070
Label Country: US
Label Emergency Number: 203-658-4411;203-843-2276

(This page intentionally left blank.)

HERCULES -- TRINITROTOLUENE (TNT) TYPE 1 FLAKE FORM
MATERIAL SAFETY DATA SHEET
NSN: 137600N018210
Manufacturer's CAGE: 2D881
Part No. Indicator: A
Part Number/Trade Name: TRINITROTOLUENE (TNT) TYPE 1 FLAKE FORM

==========

General Information

==========

Company's Name: HERCULES INCORPORATED
Company's Street: RADFORD ARMY AMMUNITION PLANT
Company's City: RADFORD
Company's State: VA
Company's Country: US
Company's Zip Code: 24141
Company's Emerg Ph #: 703-639-7294
Company's Info Ph #: 703-639-7294
Record No. For Safety Entry: 001
Tot Safety Entries This Stk#: 001
Status: SMJ
Date MSDS Prepared: 02JUL91
Safety Data Review Date: 10SEP91
MSDS Serial Number: BKZPP
Hazard Characteristic Code: E1

==========

Ingredients/Identity Information

==========

Proprietary: NO
Ingredient: 2,4,6-TRINITROTOLUENE (TNT)
Ingredient Sequence Number: 01
Percent: 99
NIOSH (RTECS) Number: XU0175000
CAS Number: 118-96-7
OSHA PEL: S, 1.5 MG/M3
ACGIH TLV: S, 0.5 MG/M3; 9293

==========

Physical/Chemical Characteristics

==========

Appearance And Odor: FLAKES, PALE YELLOW IN COLOR.
Boiling Point: 464F,240C
Vapor Density (Air=1): N/A
Specific Gravity: 1.5-1.6
Evaporation Rate And Ref: NOT APPLICABLE
Solubility In Water: 0.01% @ 25C
Percent Volatiles By Volume: <0.1

==========

Fire and Explosion Hazard Data

==========

Flash Point: EXPLODES
Lower Explosive Limit: N/A
Upper Explosive Limit: N/A
Extinguishing Media: DELUGE WITH WATER-USE LARGE QUANTITIES.
Special Fire Fighting Proc: WEAR NIOSH/MSHA APPROVED SCBA AND FULL PROTECTIVE EQUIPMENT (FP N). EVACUATE THE AREA.
Unusual Fire And Expl Hazrds: HIGHLY DANGEROUS-SHOCK WILL EXPLODE IT. WILL DETONATE IF CONFINED AND EXPOSED TO EXTRME HEAT.

==========

Reactivity Data

Stability: YES
Cond To Avoid (Stability): AVOID CONTACT WITH ALKALINE MATERIALS. WILL DETONATE IF CONFINED AND EXPOSED TO EXTREME HEAT.
Materials To Avoid: SODIUM HYDROXIDE, POTASSIUM HYDROXIDE AND OTHER HIGHLY ALKALINE MATERIALS.
Hazardous Decomp Products: NOX.
Hazardous Poly Occur: NO
Conditions To Avoid (Poly): NOT RELEVANT.

Health Hazard Data

LD50-LC50 Mixture: NONE SPECIFIED BY MANUFACTURER.
Route Of Entry - Inhalation: YES
Route Of Entry - Skin: NO
Route Of Entry - Ingestion: NO
Health Haz Acute And Chronic: ALLERGENIC, CAN CAUSE DERMATITIS. DISCOLOR SKIN AND HAIR PALE YELLOW. CAUSES NAUSEA, VOMITING AND ANOREXIA ALSO LIVER AND BLOOD DAMAGE, AND APLASTIC ANEMIA.
Carcinogenicity - NTP: NO
Carcinogenicity - IARC: NO
Carcinogenicity - OSHA: NO
Explanation Carcinogenicity: NOT RELEVANT.
Signs/Symptoms Of Overexp: SEE HEALTH HAZARDS.
Med Cond Aggravated By Exp: NONE SPECIFIED BY MANUFACTURER.
Emergency/First Aid Proc: EYE:IMEEDIATELY FLUSH THOROUGHLY WITH LARGE AMOUNTS OF LOW PRESSURE WATER FOR AT LEAST 25 MINUTES. REMOVE CONTACT LENSES TO ASSURE THOROUGH FLUSHING. CALL MD. SKIN:WASH WITH TNT INDICATOR SOAP AND RUNNING WATER. INHAL:REMOVE TO FRESH AIR. TREAT ANY IRRITATION SYMPTOMATICALLY. CALL MD. INGEST:CALL MD IMMEDIATELY (FP N).

Precautions for Safe Handling and Use

Steps If Matl Released/Spill: CLEAN UP SPILL IMMEDIATELY USING A SOFT BRISTLE BRUSH AND A CONDUCTIVE RUBBER OR PLASTIC SHOVEL.
Neutralizing Agent: NONE SPECIFIED BY MANUFACTURER.
Waste Disposal Method: BURN ON OPEN BURNING GROUND IN ACCORDANCE WITH STATE AND LOCAL REGULATIONS. MAY ALSO BE BURNED IN AN INCINERATOR APPROVED FOR EXPLOSIVES. DISPOSE OF IN ACCORDANCE WITH FEDERAL, STATE AND LOCAL REGULATIONS (FP N).
Precautions-Handling/Storing: NONE SPECIFIED BY MANUFACTURER.
Other Precautions: NONE SPECIFIED BY MANUFACTURER.

Control Measures

Respiratory Protection: NIOSH/MSHA APPROVED RESPIRATOR FOR DUSTS.
Ventilation: MECHANICAL (GENERAL) VENTILATION.
Protective Gloves: COTTON OR LEATHER GLOVES.
Eye Protection: CHEMICAL WORKERS GOGGLES (FP N).
Other Protective Equipment: FLAME-PROOF COVERALLS AND CONDUCTIVE SHOES.
Work Hygienic Practices: NONE SPECIFIED BY MANUFACTURER.
Suppl. Safety & Health Data: NONE SPECIFIED BY MANUFACTURER.

Transportation Data

Trans Data Review Date: 91294

DOT PSN Code: EEL
DOT Proper Shipping Name: CYCLOTETRAMETHYLENETETRANITRAMINE, WETTED OR HMX, WETTED OR OCTOGEN, WETTED
DOT Class: 1.1D
DOT ID Number: UN0226
DOT Pack Group: II
DOT Label: EXPLOSIVE 1.1D
IMO PSN Code: PBV
IMO Proper Shipping Name: TRINITROTOLUENE
IMO Regulations Page Number: 1144
IMO UN Number: 0209
IMO UN Class: 1.1 D
IMO Subsidiary Risk Label: -
IATA PSN Code: YYG
IATA UN ID Number: 0209
IATA UN Class: 1.1D
AFI PSN Code: XSI
AFI Prop. Shipping Name: TETRAHYDROFURAN
AFI Class: 3
AFI ID Number: UN2056
AFI Pack Group: II
AFI Basic Pac Ref: 7-7

Disposal Data

Label Data

Label Required: YES
Technical Review Date: 10SEP91
Label Date: 10SEP91
Label Status: G
Common Name: TRINITROTOLUENE (TNT) TYPE 1 FLAKE FORM
Chronic Hazard: YES
Signal Word: DANGER!
Acute Health Hazard-Slight: X
Contact Hazard-Slight: X
Fire Hazard-Severe: X
Reactivity Hazard-Severe: X
Special Hazard Precautions: ACUTE:CAUSES NAUSEA, VOMITING, AND ANOREXIA. DO NOT BREATHE VAPORS OR SWALLOW MATERIAL. USE WITH ADEQUATE VENTILATION. CAN CAUSE SKIN IRRITATION. AVOID CONTACT WITH EYES, SKIN, AND CLOTHING. TARGET ORGANS:CAN CAUSE DERMATITIS, LIVER AND BLOOD DAMAGE. AN ALLERGEN.
Protect Eye: Y
Protect Skin: Y
Protect Respiratory: Y
Label Name: HERCULES INCORPORATED
Label Street: RADFORD ARMY AMMUNITION PLANT
Label City: RADFORD
Label State: VA
Label Zip Code: 24141
Label Country: US
Label Emergency Number: 703-639-7294

(This page intentionally left blank.)

SAFETY DATA SHEET

HAMPSHIRE CHEMICAL CORP.

Product name: Monoethanolamine

Issue Date: 04/01/2015
Print Date: 11/12/2015

HAMPSHIRE CHEMICAL CORP. encourages and expects you to read and understand the entire (M)SDS, as there is important information throughout the document. We expect you to follow the precautions identified in this document unless your use conditions would necessitate other appropriate methods or actions.

1. IDENTIFICATION

Product name: Monoethanolamine

Recommended use of the chemical and restrictions on use
Identified uses: Gas treatment agent. Chemical intermediate. We recommend that you use this product in a manner consistent with the listed use. If your intended use is not consistent with the stated use, please contact your sales or technical service representative.

COMPANY IDENTIFICATION
HAMPSHIRE CHEMICAL CORP.
2030 DOW CENTER
MIDLAND MI 48674-0001
UNITED STATES

Customer Information Number: 800-258-2436
SDSQuestion@dow.com

EMERGENCY TELEPHONE NUMBER
24-Hour Emergency Contact: 989-636-4400
Local Emergency Contact: 800-424-9300

2. HAZARDS IDENTIFICATION

Hazard classification
This material is hazardous under the criteria of the Federal OSHA Hazard Communication Standard 29CFR 1910.1200.
Flammable liquids - Category 4
Acute toxicity - Category 4 - Oral
Skin corrosion - Category 1B
Serious eye damage - Category 1

Label elements
Hazard pictograms

® ™ Trademark of The Dow Chemical Company ("Dow") or an affiliated company of Dow

Signal word: **DANGER!**

Hazards
Combustible liquid.
Harmful if swallowed.
Causes severe skin burns and eye damage.
Causes serious eye damage.

Precautionary statements

Prevention
Keep away from heat/sparks/open flames/hot surfaces. - No smoking.
Wash skin thoroughly after handling.
Do not eat, drink or smoke when using this product.
Wear protective gloves/ protective clothing/ eye protection/ face protection.

Response
IF SWALLOWED: Call a POISON CENTER or doctor/ physician if you feel unwell. Rinse mouth.
IF SWALLOWED: Rinse mouth. Do NOT induce vomiting.
IF ON SKIN (or hair): Take off immediately all contaminated clothing. Rinse skin with water/shower.
IF INHALED: Remove person to fresh air and keep comfortable for breathing. Immediately call a POISON CENTER or doctor/ physician.
IF IN EYES: Rinse cautiously with water for several minutes. Remove contact lenses, if present and easy to do. Continue rinsing. Immediately call a POISON CENTER or doctor/ physician.
Wash contaminated clothing before reuse.
In case of fire: Use dry sand, dry chemical or alcohol-resistant foam to extinguish.

Storage
Store in a well-ventilated place. Keep cool.
Store locked up.

Disposal
Dispose of contents/ container to an approved waste disposal plant.

Other hazards
no data available

3. COMPOSITION/INFORMATION ON INGREDIENTS

Synonyms: 2-aminoethanol
This product is a substance.

Component	CASRN	Concentration
Monoethanolamine	141-43-5	> 99.0 %
N,N-Diethanolamine	111-42-2	< 0.2 %

4. FIRST AID MEASURES

Description of first aid measures
General advice: First Aid responders should pay attention to self-protection and use the recommended protective clothing (chemical resistant gloves, splash protection). If potential for exposure exists refer to Section 8 for specific personal protective equipment.

Inhalation: Move person to fresh air; if effects occur, consult a physician.

Skin contact: Immediate continued and thorough washing in flowing water for at least 30 minutes is imperative while removing contaminated clothing. Prompt medical consultation is essential. Wash clothing before reuse. Properly dispose of leather items such as shoes, belts, and watchbands. Suitable emergency safety shower facility should be immediately available.

Eye contact: Wash immediately and continuously with flowing water for at least 30 minutes. Remove contact lenses after the first 5 minutes and continue washing. Obtain prompt medical consultation, preferably from an ophthalmologist. Suitable emergency eye wash facility should be immediately available.

Ingestion: Do not induce vomiting. Give one cup (8 ounces or 240 ml) of water or milk if available and transport to a medical facility. Do not give anything by mouth unless the person is fully conscious.

Most important symptoms and effects, both acute and delayed: Aside from the information found under Description of first aid measures (above) and Indication of immediate medical attention and special treatment needed (below), any additional important symptoms and effects are described in Section 11: Toxicology Information.

Indication of any immediate medical attention and special treatment needed
Notes to physician: Chemical eye burns may require extended irrigation. Obtain prompt consultation, preferably from an ophthalmologist. If burn is present, treat as any thermal burn, after decontamination. Due to irritant properties, swallowing may result in burns/ulceration of mouth, stomach and lower gastrointestinal tract with subsequent stricture. Aspiration of vomitus may cause lung injury. Suggest endotracheal/esophageal control if lavage is done. No specific antidote. Treatment of exposure should be directed at the control of symptoms and the clinical condition of the patient.

5. FIREFIGHTING MEASURES

Suitable extinguishing media: Water fog or fine spray. Dry chemical fire extinguishers. Carbon dioxide fire extinguishers. Foam. Alcohol resistant foams (ATC type) are preferred. General purpose synthetic foams (including AFFF) or protein foams may function, but will be less effective.

Unsuitable extinguishing media: Do not use direct water stream. May spread fire.

Special hazards arising from the substance or mixture
Hazardous combustion products: During a fire, smoke may contain the original material in addition to combustion products of varying composition which may be toxic and/or irritating. Combustion products may include and are not limited to: Nitrogen oxides. Carbon monoxide. Carbon dioxide.

Unusual Fire and Explosion Hazards: Violent steam generation or eruption may occur upon application of direct water stream to hot liquids.

Advice for firefighters
Fire Fighting Procedures: Keep people away. Isolate fire and deny unnecessary entry. Burning liquids may be extinguished by dilution with water. Do not use direct water stream. May spread fire. Burning liquids may be moved by flushing with water to protect personnel and minimize property damage.

Special protective equipment for firefighters: Wear positive-pressure self-contained breathing apparatus (SCBA) and protective fire fighting clothing (includes fire fighting helmet, coat, trousers, boots, and gloves). Avoid contact with this material during fire fighting operations. If contact is likely, change to full chemical resistant fire fighting clothing with self-contained breathing apparatus. If this is not available, wear full chemical resistant clothing with self-contained breathing apparatus and fight fire from a remote location. For protective equipment in post-fire or non-fire clean-up situations, refer to the relevant sections.

6. ACCIDENTAL RELEASE MEASURES

Personal precautions, protective equipment and emergency procedures: Evacuate area. Refer to section 7, Handling, for additional precautionary measures. Keep upwind of spill. Ventilate area of leak or spill. Only trained and properly protected personnel must be involved in clean-up operations. No smoking in area. Use appropriate safety equipment. For additional information, refer to Section 8, Exposure Controls and Personal Protection.

Environmental precautions: Prevent from entering into soil, ditches, sewers, waterways and/or groundwater. See Section 12, Ecological Information.

Methods and materials for containment and cleaning up: Small spills: Dilute with water. Absorb with materials such as: Non-combustible material. Sand. Clay. Vermiculite. Zorb-all®. Collect in suitable and properly labeled containers. Large spills: Contain spilled material if possible. Pump into suitable and properly labeled containers. See Section 13, Disposal Considerations, for additional information.

7. HANDLING AND STORAGE

Precautions for safe handling: Keep away from heat, sparks and flame. Containers, even those that have been emptied, can contain vapors. Do not cut, drill, grind, weld, or perform similar operations on or near empty containers. Do not get in eyes, on skin, on clothing. Do not swallow. Avoid breathing vapor. Wash thoroughly after handling. Keep container closed. Use with adequate ventilation. See Section 8, EXPOSURE CONTROLS AND PERSONAL PROTECTION.

Spills of these organic materials on hot fibrous insulations may lead to lowering of the autoignition temperatures possibly resulting in spontaneous combustion.

Conditions for safe storage: Monoethanolamine can react with iron to form an unstable material that can decompose at temperatures above 130 °C in air. Use caution when thawing drummed material. If steam heating is necessary, use only low pressure steam and stainless steel coils. Store in a dry place. Do not store in: Zinc. Aluminum. Copper. Copper alloys. Galvanized containers.

Storage stability

Storage Period:
Plastic drums.
24 Month
Bulk
6 Month

8. EXPOSURE CONTROLS/PERSONAL PROTECTION

Control parameters
Exposure limits are listed below, if they exist.

Component	Regulation	Type of listing	Value/Notation
Monoethanolamine	ACGIH	TWA	3 ppm
	ACGIH	STEL	6 ppm
	OSHA Z-1	TWA	6 mg/m3 3 ppm
N,N-Diethanolamine	Dow IHG	TWA	0.2 mg/m3
	Dow IHG	TWA	Absorbed via skin
	ACGIH	TWA Inhalable fraction and vapor	1 mg/m3
	ACGIH	TWA	Absorbed via skin

Exposure controls
Engineering controls: Use engineering controls to maintain airborne level below exposure limit requirements or guidelines. If there are no applicable exposure limit requirements or guidelines, use only with adequate ventilation. Local exhaust ventilation may be necessary for some operations.

Individual protection measures

Eye/face protection: Use chemical goggles. If exposure causes eye discomfort, use a full-face respirator.

Skin protection

Hand protection: Use gloves chemically resistant to this material. Examples of preferred glove barrier materials include: Polyethylene. Chlorinated polyethylene. Ethyl vinyl alcohol laminate ("EVAL"). Examples of acceptable glove barrier materials include: Viton. Butyl rubber. Neoprene. Natural rubber ("latex"). Polyvinyl chloride ("PVC" or "vinyl"). Nitrile/butadiene rubber ("nitrile" or "NBR"). Avoid gloves made of: Polyvinyl alcohol ("PVA"). NOTICE: The selection of a specific glove for a particular application and duration of use in a workplace should also take into account all relevant workplace factors such as, but not limited to: Other chemicals which may be handled, physical requirements (cut/puncture protection, dexterity, thermal protection), potential body reactions to glove materials, as well as the instructions/specifications provided by the glove supplier.

Other protection: Use protective clothing chemically resistant to this material. Selection of specific items such as face shield, boots, apron, or full body suit will depend on the task.

Respiratory protection: Respiratory protection should be worn when there is a potential to exceed the exposure limit requirements or guidelines. If there are no applicable exposure limit requirements or guidelines, use an approved respirator. Selection of air-purifying or positive-pressure supplied-air will depend on the specific operation and the potential airborne

concentration of the material. For emergency conditions, use an approved positive-pressure self-contained breathing apparatus.
The following should be effective types of air-purifying respirators: Organic vapor cartridge.

9. PHYSICAL AND CHEMICAL PROPERTIES

Appearance	
Physical state	Liquid.
Color	Colorless
Odor	Ammoniacal
Odor Threshold	No test data available
pH	12.1 *Literature* (50% aq. sol.)
Melting point/range	No test data available
Freezing point	10.5 °C (50.9 °F) *Literature*
Boiling point (760 mmHg)	170.3 °C (338.5 °F) at 1,013.25 hPa *Literature*
Flash point	**closed cup** 93 °C (199 °F) at 1 bar *Pensky-Martens Closed Cup ASTM D 93*
Evaporation Rate (Butyl Acetate = 1)	no data available
Flammability (solid, gas)	Not applicable to liquids
Lower explosion limit	3.0 % vol *Literature*
Upper explosion limit	23.5 % vol *Literature*
Vapor Pressure	0.5 hPa at 20 °C (68 °F) *Literature*
Relative Vapor Density (air = 1)	2.1 at 20 °C (68 °F) *Literature*
Relative Density (water = 1)	1.02 *Literature*
Water solubility	1000 g/L at 20 °C (68 °F) *Literature*
Partition coefficient: n-octanol/water	log Pow: -1.91 *Measured*
Auto-ignition temperature	410 °C (770 °F) *Literature*
Decomposition temperature	No test data available
Dynamic Viscosity	23.18 mPa.s at 20 °C (68 °F) *Literature*
Kinematic Viscosity	No test data available
Explosive properties	Not explosive
Oxidizing properties	No
Molecular weight	no data available

NOTE: The physical data presented above are typical values and should not be construed as a specification.

10. STABILITY AND REACTIVITY

Reactivity: No dangerous reaction known under conditions of normal use.

Chemical stability: Stable under recommended storage conditions. See Storage, Section 7. Hygroscopic

Possibility of hazardous reactions: Polymerization will not occur.

Conditions to avoid: Exposure to elevated temperatures can cause product to decompose. Avoid moisture.

Incompatible materials: Avoid contact with: Strong acids. Strong oxidizers. Product may potentially react with various halogenated organic solvents, resulting in temperature and/or pressure increases Corrosive when wet. Heating above 60°C in the presence of aluminum can result in corrosion and generation of flammable hydrogen gas. Avoid unintended contact with: Halogenated hydrocarbons.

Hazardous decomposition products: Decomposition products depend upon temperature, air supply and the presence of other materials.

11. TOXICOLOGICAL INFORMATION

Toxicological information on this product or its components appear in this section when such data is available.

Acute toxicity

Acute oral toxicity
Low toxicity if swallowed. Swallowing may result in gastrointestinal irritation or ulceration. Swallowing may result in burns of the mouth and throat.

LD50, Rat, 1,089 mg/kg

Acute dermal toxicity
Prolonged skin contact is unlikely to result in absorption of harmful amounts.

LD50, Rat, 2,504 mg/kg

Acute inhalation toxicity
Prolonged excessive exposure may cause adverse effects. Excessive exposure may cause irritation to upper respiratory tract (nose and throat).

LC50, Rat, 4 Hour, vapour, > 1.48 mg/l Estimated. No deaths occurred at this concentration.

Skin corrosion/irritation
Brief contact may cause skin burns. Symptoms may include pain, severe local redness and tissue damage.
Classified as corrosive to the skin according to DOT guidelines.

Serious eye damage/eye irritation

May cause severe irritation with corneal injury which may result in permanent impairment of vision, even blindness. Chemical burns may occur.
Vapor may cause eye irritation experienced as mild discomfort and redness.

Sensitization
Did not cause allergic skin reactions when tested in guinea pigs.

For respiratory sensitization:
No relevant data found.

Specific Target Organ Systemic Toxicity (Single Exposure)
Material is corrosive. Material is not classified as a respiratory irritant; however, upper respiratory tract irritation or corrosivity may be expected.

Specific Target Organ Systemic Toxicity (Repeated Exposure)
In animals, effects have been reported on the following organs:
Kidney.
Liver.

Carcinogenicity
Findings from a chronic diethanolamine skin painting study by NTP include liver and kidney tumors in mice; no tumors were observed in rats. Mechanistic studies indicate that tumor formation is of questionable relevance to humans. A number of factors may have influenced the results and are being considered in their interpretation.

Teratogenicity
Has been toxic to the fetus in laboratory animals at doses toxic to the mother. However, the relevance of this to humans is unknown. Dose levels producing these effects were many times higher than any dose levels expected from exposure due to use.

Reproductive toxicity
In animal studies, did not interfere with reproduction.

Mutagenicity
In vitro genetic toxicity studies were negative. Animal genetic toxicity studies were negative.

Aspiration Hazard
Based on available information, aspiration hazard could not be determined.

Carcinogenicity

Component	List	Classification
N,N-Diethanolamine	IARC	Group 2B: Possibly carcinogenic to humans
	ACGIH	A3: Confirmed animal carcinogen with unknown relevance to humans.

12. ECOLOGICAL INFORMATION

Ecotoxicological information on this product or its components appear in this section when such data is available.

Toxicity

Acute toxicity to fish
Material is moderately toxic to aquatic organisms on an acute basis (LC50/EC50 between 1 and 10 mg/L in the most sensitive species tested).

LC50, Cyprinus carpio (Carp), semi-static test, 96 Hour, 349 mg/l

Acute toxicity to aquatic invertebrates
EC50, Daphnia magna (Water flea), static test, 48 Hour, 65 mg/l

Acute toxicity to algae/aquatic plants
ErC50, Pseudokirchneriella subcapitata (green algae), 72 Hour, Growth rate inhibition, 2.5 mg/l, OECD Test Guideline 201 or Equivalent

NOEC, Pseudokirchneriella subcapitata (green algae), 72 Hour, Growth rate inhibition, 1 mg/l, OECD Test Guideline 201

Toxicity to bacteria
EC50, activated sludge, > 1,000 mg/l

Chronic aquatic toxicity
Chronic toxicity to fish
LOEC, Oryzias latipes (Orange-red killifish), 30 d, Other, 3.6 mg/l

Chronic toxicity to aquatic invertebrates
NOEC, Daphnia magna (Water flea), 21 d, number of offspring, 0.85 mg/l

Persistence and degradability

Biodegradability: Material is readily biodegradable. Passes OECD test(s) for ready biodegradability.
10-day Window: Pass
Biodegradation: > 90 %
Exposure time: 21 d
Method: OECD Test Guideline 301A or Equivalent

Theoretical Oxygen Demand: 2.36 mg/mg

Photodegradation
Sensitizer: OH radicals
Atmospheric half-life: 0.45 d
Method: Estimated.

Bioaccumulative potential

Bioaccumulation: Bioconcentration potential is low (BCF < 100 or Log Pow < 3).
Partition coefficient: n-octanol/water(log Pow): -1.91 Measured

Mobility in soil

Potential for mobility in soil is very high (Koc between 0 and 50).
Partition coefficient(Koc): 1.17 Estimated.

13. DISPOSAL CONSIDERATIONS

Disposal methods: DO NOT DUMP INTO ANY SEWERS, ON THE GROUND, OR INTO ANY BODY OF WATER. All disposal practices must be in compliance with all Federal, State/Provincial and local laws and regulations. Regulations may vary in different locations. Waste characterizations and compliance with applicable laws are the responsibility solely of the waste generator. AS YOUR SUPPLIER, WE HAVE NO CONTROL OVER THE MANAGEMENT PRACTICES OR MANUFACTURING PROCESSES OF PARTIES HANDLING OR USING THIS MATERIAL. THE INFORMATION PRESENTED HERE PERTAINS ONLY TO THE PRODUCT AS SHIPPED IN ITS INTENDED CONDITION AS DESCRIBED IN MSDS SECTION: Composition Information. FOR UNUSED & UNCONTAMINATED PRODUCT, the preferred options include sending to a licensed, permitted: Incinerator or other thermal destruction device.

14. TRANSPORT INFORMATION

DOT

Proper shipping name	Ethanolamine
UN number	UN 2491
Class	8
Packing group	III

Classification for SEA transport (IMO-IMDG):

Proper shipping name	ETHANOLAMINE
UN number	UN 2491
Class	8
Packing group	III
Marine pollutant	No
Transport in bulk according to Annex I or II of MARPOL 73/78 and the IBC or IGC Code	Consult IMO regulations before transporting ocean bulk

Classification for AIR transport (IATA/ICAO):

Proper shipping name	Ethanolamine
UN number	UN 2491
Class	8
Packing group	III

This information is not intended to convey all specific regulatory or operational requirements/information relating to this product. Transportation classifications may vary by container volume and may be influenced by regional or country variations in regulations. Additional transportation system information can be obtained through an authorized sales or customer service representative. It is the responsibility of the transporting organization to follow all applicable laws, regulations and rules relating to the transportation of the material.

15. REGULATORY INFORMATION

OSHA Hazard Communication Standard
This product is a "Hazardous Chemical" as defined by the OSHA Hazard Communication Standard, 29 CFR 1910.1200.

Superfund Amendments and Reauthorization Act of 1986 Title III (Emergency Planning and Community Right-to-Know Act of 1986) Sections 311 and 312
Fire Hazard
Acute Health Hazard

Superfund Amendments and Reauthorization Act of 1986 Title III (Emergency Planning and Community Right-to-Know Act of 1986) Section 313
This material does not contain any chemical components with known CAS numbers that exceed the threshold (De Minimis) reporting levels established by SARA Title III, Section 313.

Pennsylvania Worker and Community Right-To-Know Act:
The following chemicals are listed because of the additional requirements of Pennsylvania law:

Components	CASRN
Monoethanolamine	141-43-5

California Proposition 65 (Safe Drinking Water and Toxic Enforcement Act of 1986)
WARNING: This product contains a chemical(s) known to the State of California to cause cancer.

Components	CASRN
N,N-Diethanolamine	111-42-2

United States TSCA Inventory (TSCA)
All components of this product are in compliance with the inventory listing requirements of the U.S. Toxic Substances Control Act (TSCA) Chemical Substance Inventory.

:

16. OTHER INFORMATION

Product Literature
Additional information on this product may be obtained by calling your sales or customer service contact.

Hazard Rating System
NFPA

Health	Fire	Reactivity
3	2	0

Revision
Identification Number: 101197155 / A212 / Issue Date: 04/01/2015 / Version: 7.0

Most recent revision(s) are noted by the bold, double bars in left-hand margin throughout this document.

Legend

Absorbed via skin	Absorbed via skin
ACGIH	USA. ACGIH Threshold Limit Values (TLV)
Dow IHG	Dow Industrial Hygiene Guideline
OSHA Z-1	USA. Occupational Exposure Limits (OSHA) - Table Z-1 Limits for Air Contaminants
STEL	Short-term exposure limit
TWA	8-hour, time-weighted average

Information Source and References

This SDS is prepared by Product Regulatory Services and Hazard Communications Groups from information supplied by internal references within our company.

HAMPSHIRE CHEMICAL CORP. urges each customer or recipient of this (M)SDS to study it carefully and consult appropriate expertise, as necessary or appropriate, to become aware of and understand the data contained in this (M)SDS and any hazards associated with the product. The information herein is provided in good faith and believed to be accurate as of the effective date shown above. However, no warranty, express or implied, is given. Regulatory requirements are subject to change and may differ between various locations. It is the buyer's/user's responsibility to ensure that his activities comply with all federal, state, provincial or local laws. The information presented here pertains only to the product as shipped. Since conditions for use of the product are not under the control of the manufacturer, it is the buyer's/user's duty to determine the conditions necessary for the safe use of this product. Due to the proliferation of sources for information such as manufacturer-specific (M)SDSs, we are not and cannot be responsible for (M)SDSs obtained from any source other than ourselves. If you have obtained an (M)SDS from another source or if you are not sure that the (M)SDS you have is current, please contact us for the most current version.

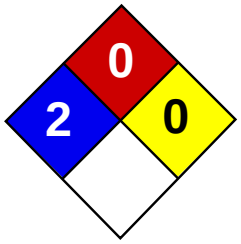

Health	3
Fire	0
Reactivity	0
Personal Protection	

Material Safety Data Sheet
Sodium Hydroxide, 20% MSDS

Section 1: Chemical Product and Company Identification

Product Name: Sodium Hydroxide, 20%

Catalog Codes: SLS2788

CAS#: Mixture.

RTECS: Not applicable.

TSCA: TSCA 8(b) inventory: Sodium hydroxide; Water

CI#: Not applicable.

Synonym:

Chemical Name: Not applicable.

Chemical Formula: Not applicable.

Contact Information:

Sciencelab.com, Inc.
14025 Smith Rd.
Houston, Texas 77396

US Sales: **1-800-901-7247**
International Sales: **1-281-441-4400**

Order Online: ScienceLab.com

CHEMTREC (24HR Emergency Telephone), call: 1-800-424-9300

International CHEMTREC, call: 1-703-527-3887

For non-emergency assistance, call: 1-281-441-4400

Section 2: Composition and Information on Ingredients

Composition:

Name	CAS #	% by Weight
Sodium hydroxide	1310-73-2	20
Water	7732-18-5	80

Toxicological Data on Ingredients: Sodium hydroxide LD50: Not available. LC50: Not available.

Section 3: Hazards Identification

Potential Acute Health Effects:
Very hazardous in case of skin contact (corrosive, irritant), of eye contact (irritant), of ingestion. Hazardous in case of inhalation. Liquid or spray mist may produce tissue damage particularly on mucous membranes of eyes, mouth and respiratory tract. Skin contact may produce burns. Inhalation of the spray mist may produce severe irritation of respiratory tract, characterized by coughing, choking, or shortness of breath. Inflammation of the eye is characterized by redness, watering, and itching. Skin inflammation is characterized by itching, scaling, reddening, or, occasionally, blistering.

Potential Chronic Health Effects:
Non-corrosive for skin. Non-irritant for skin. Non-sensitizer for skin. Non-permeator by skin. Non-irritating to the eyes. Non-hazardous in case of ingestion. Non-hazardous in case of inhalation. CARCINOGENIC EFFECTS: Not available. MUTAGENIC EFFECTS: Not available. TERATOGENIC EFFECTS: Not available. DEVELOPMENTAL TOXICITY: Not available. The substance is toxic to lungs, mucous membranes. Repeated or prolonged exposure to the substance can produce target organs damage. Repeated or prolonged contact with spray mist may produce chronic eye irritation and severe

skin irritation. Repeated or prolonged exposure to spray mist may produce respiratory tract irritation leading to frequent attacks of bronchial infection.

Section 4: First Aid Measures

Eye Contact:
Check for and remove any contact lenses. Immediately flush eyes with running water for at least 15 minutes, keeping eyelids open. Finish by rinsing thoroughly with running water to avoid a possible infection. Cold water may be used.

Skin Contact:
If the chemical got onto the clothed portion of the body, remove the contaminated clothes as quickly as possible, protecting your own hands and body. Place the victim under a deluge shower. If the chemical got on the victim's exposed skin, such as the hands : Gently and thoroughly wash the contaminated skin with running water and non-abrasive soap. Be particularly careful to clean folds, crevices, creases and groin. Cold water may be used. If irritation persists, seek medical attention. Wash contaminated clothing before reusing.

Serious Skin Contact:
Wash with a disinfectant soap and cover the contaminated skin with an anti-bacterial cream. Seek medical attention.

Inhalation: Allow the victim to rest in a well ventilated area. Seek immediate medical attention.

Serious Inhalation:
Evacuate the victim to a safe area as soon as possible. Loosen tight clothing such as a collar, tie, belt or waistband. If breathing is difficult, administer oxygen. If the victim is not breathing, perform mouth-to-mouth resuscitation. WARNING: It may be hazardous to the person providing aid to give mouth-to-mouth resuscitation when the inhaled material is toxic, infectious or corrosive. Seek immediate medical attention.

Ingestion:
Do not induce vomiting. Loosen tight clothing such as a collar, tie, belt or waistband. If the victim is not breathing, perform mouth-to-mouth resuscitation. Seek immediate medical attention.

Serious Ingestion: Not available.

Section 5: Fire and Explosion Data

Flammability of the Product: Non-flammable.

Auto-Ignition Temperature: Not applicable.

Flash Points: Not applicable.

Flammable Limits: Not applicable.

Products of Combustion: Not available.

Fire Hazards in Presence of Various Substances: Not applicable.

Explosion Hazards in Presence of Various Substances:
Risks of explosion of the product in presence of mechanical impact: Not available. Risks of explosion of the product in presence of static discharge: Not available.

Fire Fighting Media and Instructions: Not applicable.

Special Remarks on Fire Hazards: Not available.

Special Remarks on Explosion Hazards: Not available.

Section 6: Accidental Release Measures

Small Spill:

Dilute with water and mop up, or absorb with an inert dry material and place in an appropriate waste disposal container. If necessary: Neutralize the residue with a dilute solution of acetic acid.

Large Spill:
Corrosive liquid. Stop leak if without risk. Absorb with DRY earth, sand or other non-combustible material. Do not get water inside container. Do not touch spilled material. Use water spray curtain to divert vapor drift. Prevent entry into sewers, basements or confined areas; dike if needed. Call for assistance on disposal. Neutralize the residue with a dilute solution of acetic acid. Be careful that the product is not present at a concentration level above TLV. Check TLV on the MSDS and with local authorities.

Section 7: Handling and Storage

Precautions:
Keep container dry. Do not breathe gas/fumes/ vapour/spray. Never add water to this product In case of insufficient ventilation, wear suitable respiratory equipment If you feel unwell, seek medical attention and show the label when possible. Avoid contact with skin and eyes Keep away from incompatibles such as moisture.

Storage:
Alkalis may be stored in heavy duty gauge steel containers. Corrosive materials should be stored in a separate safety storage cabinet or room.

Section 8: Exposure Controls/Personal Protection

Engineering Controls:
Provide exhaust ventilation or other engineering controls to keep the airborne concentrations of vapors below their respective threshold limit value.

Personal Protection:
Face shield Lab Coat Vapor respirator. Be sure to use an approved/certified respirator or equivalent. Gloves. Boots.

Personal Protection in Case of a Large Spill:
Splash goggles. Full suit. Vapor respirator. Boots. Gloves. A self contained breathing apparatus should be used to avoid inhalation of the product. Suggested protective clothing might not be sufficient; consult a specialist BEFORE handling this product.

Exposure Limits:
Sodium hydroxide CEIL: 2 (mg/m3) from ACGIH [1995] Consult local authorities for acceptable exposure limits.

Section 9: Physical and Chemical Properties

Physical state and appearance: Liquid.

Odor: Odorless.

Taste: Not available.

Molecular Weight: Not applicable.

Color: Clear Colorless.

pH (1% soln/water): Basic.

Boiling Point: The lowest known value is 100°C (212°F) (Water).

Melting Point: Not available.

Critical Temperature: Not available.

Specific Gravity: Weighted average: 1.12 (Water = 1)

Vapor Pressure: The highest known value is 17.535 mm of Hg (@ 20°C) (Water).

Vapor Density: The highest known value is 0.62 (Air = 1) (Water).

Volatility: Not available.

Odor Threshold: Not available.

Water/Oil Dist. Coeff.: Not available.

Ionicity (in Water): Not available.

Dispersion Properties: See solubility in water.

Solubility: Easily soluble in cold water, hot water.

Section 10: Stability and Reactivity Data

Stability: The product is stable.

Instability Temperature: Not available.

Conditions of Instability: Not available.

Incompatibility with various substances: Not available.

Corrosivity: Slightly corrosive to corrosive in presence of glass.

Special Remarks on Reactivity: Not available.

Special Remarks on Corrosivity: Not available.

Polymerization: No.

Section 11: Toxicological Information

Routes of Entry: Absorbed through skin. Dermal contact. Eye contact. Inhalation. Ingestion.

Toxicity to Animals:
LD50: Not available. LC50: Not available.

Chronic Effects on Humans: The substance is toxic to lungs, mucous membranes.

Other Toxic Effects on Humans:
Very hazardous in case of skin contact (corrosive, irritant), of ingestion. Hazardous in case of inhalation.

Special Remarks on Toxicity to Animals: Not available.

Special Remarks on Chronic Effects on Humans: Not available.

Special Remarks on other Toxic Effects on Humans: Not available.

Section 12: Ecological Information

Ecotoxicity: Not available.

BOD5 and COD: Not available.

Products of Biodegradation:
Possibly hazardous short term degradation products are not likely. However, long term degradation products may arise.

Toxicity of the Products of Biodegradation: The product itself and its products of degradation are not toxic.

Special Remarks on the Products of Biodegradation: Not available.

Section 13: Disposal Considerations

Waste Disposal:

Section 14: Transport Information

DOT Classification: CLASS 8: Corrosive liquid.

Identification: : Sodium hydroxide, solution (Sodium hydroxide) : UN1824 PG: II

Special Provisions for Transport: Not available.

Section 15: Other Regulatory Information

Federal and State Regulations:
Pennsylvania RTK: Sodium hydroxide Massachusetts RTK: Sodium hydroxide TSCA 8(b) inventory: Sodium hydroxide; Water

Other Regulations: OSHA: Hazardous by definition of Hazard Communication Standard (29 CFR 1910.1200).

Other Classifications:

WHMIS (Canada):
CLASS D-2A: Material causing other toxic effects (VERY TOXIC). CLASS E: Corrosive liquid.

DSCL (EEC): R35- Causes severe burns.

HMIS (U.S.A.):

Health Hazard: 3

Fire Hazard: 0

Reactivity: 0

Personal Protection:

National Fire Protection Association (U.S.A.):

Health: 2

Flammability: 0

Reactivity: 0

Specific hazard:

Protective Equipment:
Gloves. Lab coat. Vapor respirator. Be sure to use an approved/certified respirator or equivalent. Wear appropriate respirator when ventilation is inadequate. Face shield.

Section 16: Other Information

References: Not available.

Other Special Considerations: Not available.

Created: 10/10/2005 12:05 PM

Last Updated: 06/09/2012 12:00 PM

The information above is believed to be accurate and represents the best information currently available to us. However, we make no warranty of merchantability or any other warranty, express or implied, with respect to such information, and we assume no liability resulting from its use. Users should make their own investigations to determine the suitability of the information for their particular purposes. In no event shall ScienceLab.com be liable for any claims, losses, or damages of any third party or for

lost profits or any special, indirect, incidental, consequential or exemplary damages, howsoever arising, even if ScienceLab.com has been advised of the possibility of such damages.

Material Safety Data Sheet

MSDS Date: 3/4/11

110635420-2

1. PRODUCT AND COMPANY IDENTIFICATION

Product Name: AS-5420

Synonyms: Sodium Permanganate Solution

Certified to a Maximum Use for Potable Water of 224 mg/L

Manufacturer/Supplier:
Applied Specialties, Inc.
33555 Pin Oak Parkway
Avon Lake, OH 44012

Customer Information Number: 440-933-9442
Emergency 24-Hour Health/Environmental Phone: 216-973-6118

2. CHEMICAL COMPOSITION

Component	CAS Number	Wt%	Exposure Guidelines (TWA Ceiling)	
Sodium Permanganate	10101-50-5	20	5.0 mg/m^3 Mn	OSHA
			0.2 mg/m^3 Mn	ACGIH

Chemical identity of some ingredients may be withheld as confidential as permitted by 29 CFR 1910.1200 and various State right to know laws.

3. HAZARDS IDENTIFICATION

EMERGENCY OVERVIEW

Dark purple liquid, odorless

DANGER! Very powerful oxidizer, explosive in contact with sulfuric acid or peroxides. May react violently with readily oxidizable materials. May ignite wood and cloth. Corrosive to eyes on contact. May cause severe burns. Do not ingest, avoid inhalation of vapors. May be harmful if swallowed or absorbed through skin

HMIS Rating: Health – 2 Fire – 1 Reactivity - 2

0- Minimal; 1- Slight Hazard; 2- Moderate Hazard; 3- Serious Hazard; 4-Severe Hazard

TARGET ORGANS - Eyes, skin, mucous membranes of the nose, throat, and lungs
ROUTES OF ENTRY INTO BODY - Inhalation, ingestion, skin absorption, skin or eye Contact
SIGNS AND SYMPTOMS OF EXPOSURE –Damaging to eye tissue, may cause irreversible permanent injury to eyes, may cause irritation or on prolonged contact damage skin. Harmful if swallowed or inhaled. May burn mucous membranes. Aspiration may cause irritation or lung damage.

OSHA Hazard Communication This material is hazardous as defined by 29 CFR 1910.1200

4. FIRST AID MEASURES

EYE CONTACT: If material gets into the eyes, flush the eyes with large amounts of water for at least 30 minutes, lifting the lower and upper lids occasionally. Get medical attention immediately, preferably from an ophthalmologist. DO NOT attempt to neutralize chemically. Decomposition products are alkaline. Contact lenses should not be worn when working with this substance or any other chemical. If contact lenses were worn, remove from the eye after the first 5 minutes of flushing.

SKIN CONTACT: Skin that becomes contaminated should be washed or showered for 30 minutes with soap and water to remove any chemical from skin. Get medical attention if irritation is severe and persistent. CAUTION: solution may ignite certain textiles. Contaminated clothing should be removed and laundered. Clothing that cannot be decontaminated, like leather boots, should be disposed of properly.

INHALATION: If a person breathes in large amounts of product mist, move the person to fresh air. If breathing has stopped, perform artificial respiration. Keep the affected person warm and at rest. Get medical attention as soon as is possible.

INGESTION: If a person swallows this product, give large quantities of water. Get medical attention immediately. Do not induce vomiting. Never give anything by mouth to an unconscious person.

5. FIRE FIGHTING MEASURES

Flash Point and Method: Not Determined

EXTINGUISHING MEDIA
Use water to flood fire exposed containers. Cool affected containers with large quantities of water from as far away as possible

FIRE FIGHTING EQUIPMENT
Wear NIOSH/MSHA approved, pressure-demand self-contained breathing apparatus and full protective gear including boots, protective gloves, and gas-tight goggles. Regular Fire Fighter's gear is inadequate

GENERAL HAZARD
Keep upwind. Avoid breathing dust, vapors, and fumes from this material. Avoid bodily contact with the material. Containers can build pressure if exposed to heat. Keep material out of water sources and sewers. Once AS-5420 becomes a waste, it is considered a D001 hazardous (ignitable) waste, See Section 6.

UNUSUAL FIRE AND EXPLOSION HAZARDS
Do not allow material to come into contact with acids, peroxides, formaldehyde, antifreeze, hydraulic fluids, combustible materials, organic materials, or easily oxidizable metal powders

HAZARDOUS COMBUSTION PRODUCTS
Contact with hydrochloric acid may cause toxic chlorine gas to be liberated

6. ACCIDENTAL RELEASE MEASURES

Persons not wearing protective equipment and clothing should be restricted from spill areas until clean up has been completed. Spilled material may be a slipping hazard. If AS-5420 is spilled, take the following steps:

Applied Specialties, Inc.

33555 Pin Oak Parkway, Avon Lake, OH
44012

1. Ventilate the spill area. Dike the area around the spill to prevent spreading.
2. Dilute to approximately 6% with water then reduce with sodium thiosulfate, a bisulfite, or a ferrous salt solution. Bisulfite or Ferrous salt may require dilute Sulfuric acid (10%) to promote reduction.
3. Adjust the pH to neutral with Sodium Carbonate if required
4. Decant or filter solution and deposit the sludge in an approved landfill.
5. To clean contaminated floors, flush with an abundant quantity of water and treat collected water as described above.
6. Discard any vacuumed material and the absorbent material in accordance to all FEDERAL, STATE AND LOCAL REGULATIONS.
7. Once this product becomes a waste, it is considered a D001 hazardous (ignitable) waste.
8. Containers are hazardous when empty.

NOTE: DO NOT wash or pour AS-5420 into any surface waters or streams or directly into sewers.

7. HANDLING AND STORAGE

HANDLING
Use with adequate ventilation. Wear appropriate protective equipment (See Section 8). Practice good industrial hygiene. Wash after handling and before eating, drinking, or smoking. Containers are hazardous when empty, follow all MSDS and label warnings even when empty.

STORAGE
Keep container tightly closed with the labels visible. Keep away from heat, and sunlight. Storage temperature range: 0-100°C (32-212°F). This material may decompose spontaneously if exposed to heat (135°C / 275°F). Store in well ventilated area. Segregate from acids, peroxides, combustibles, organic or easily oxidizable materials including antifreeze and hydraulic fluids.

8. EXPOSURE CONTROLS/PERSONAL PROTECTION

ENGINEERING CONTROLS
Use in areas with adequate ventilation. In applications where the product will be exposed to elevated temperatures, use local ventilation to remove potential decomposition products when needed.

PERSONAL PROTECTION

Respirator:	Only necessary in fire fighting situations or if sensitivity has developed
Eye Protection:	Wear chemical goggles and a face shield
Gloves:	Wear synthetic rubber gloves and check with the glove manufacturers
Clothing:	Normal working clothing is usually adequate, but wear a rubber apron in areas where splashing may occur
Other:	Eye wash and safety showers should be in immediate work area, practice good industrial hygiene

Recommendations: ESCAPE & FIRE FIGHTING-Self-contained breathing apparatus with a face-piece operated in pressure demand or other positive-pressure mode.

9. PHYSICAL AND CHEMICAL PROPERTIES

APPEARANCE	Dark purple liquid

Applied Specialties, Inc.

33555 Pin Oak Parkway, Avon Lake, OH
44012

ODOR	Odorless
BOILING POINT	101°C (213.8°F)
FREEZING POINT	-0.5°C (31°F)
FLASH POINT	Not applicable
VAPOR PRESSURE	760 mm Hg @ 105°C
SPECIFIC GRAVITY	1.160 ± 0.020
PRODUCT pH (5%)	7.5 ± 1.5
SOLUBILITY IN WATER	100%

10. STABILITY AND REACTIVITY

Stability	Stable under conditions specified in this data sheet. Thermal decomposition is dependent on time and temperature
Hazardous Polymerization	Will not occur
Incompatibilities	Acids, peroxides, formaldehyde, antifreeze, hydraulic fluids, and all combustible, organic, or easily oxidizable materials including metal powders.
Hazardous Decomposition Products	Contact with Hydrochloric acid may cause toxic chlorine gas to evolve.

11. TOXICOLOGICAL INFORMATION

No Data

12. ECOLOGICAL INFORAMTION

No Data

13. DISPOSAL CONSIDERATIONS

PRODUCT RESIDUES
Prohibition – Do not discharge to sewer
Destruction – Dispose in accordance with federal, state, and local regulations. Various options may be available. RCRA Hazardous D001 (ignitability)

USED PACKAGING
Decontamination – Empty packaging thoroughly rinse with water twice before disposal
Dispose in accordance with federal, state, and local regulations. Various options may be available

14. TRANSPORT INFORMATION

PROPER SHIPPING NAME	Permanganates, Inorganic, Aqueous Solution, N.O.S. (Sodium Permanganate)
HAZARD CLASS	5.1
IDENTIFICATION NUMBER	UN3214

Applied Specialties, Inc.

33555 Pin Oak Parkway, Avon Lake, OH
44012

PACKAGING GROUP	II
LABEL REQUIRED	OXIDIZER

15. REGULATORY INFORMATION

Federal Regulations

OSHA HAZARD COMMUNICATION STANDARD (26 CFR 1910.1200)
[X] Hazardous [ ] Non-Hazardous
None of the chemicals in this product are considered highly hazardous by OSHA.

CERCLA/SUPERFUND (40 CFR 117, Section 302)
This product does not contain any chemicals subject to the reporting requirements

SARA EXTREMELY HAZARDOUS SUBSTANCES (40 CFR 355)
This product does not contain any chemicals subject to the reporting requirements

SARA HAZARD CATEGORIES (40 CFR 370, Sections 311, 312)
[X] Acute [X] Chronic [X] Fire [ ] Pressure [X] Reactive [ ] None

SARA TOXIC SUBSTANCES (40 CFR 372, Section 313)
Sodium Permanganate 20% (For manganese compounds)

US TOXIC SUBSTANCES CONTROL ACT/INVENTORY STATUS (TSCA)
All components are listed

RCRA STATUS
If this product becomes a waste it is classified as D001 (Ignitable Waste)

NTP, IARC, OSHA, & ACGIH STATUS
None of the components are listed

REPORTABLE QUANTITY (RQ)
This product does not have a DOT reportable quantity

State Regulations

PENNSYLVANIA, NEW JERSEY, and MASSACHUSETTS RIGHT-TO-KNOW INFORMATION:

Component	CAS Number
Sodium Permanganate	10101-50-5

CALIFORNIA PROPOSITION 65:
This product does not contain toxic chemical(s) currently on the California list of known carcinogens and reproductive toxins

Pursuant to the California Safe Drinking Water and Toxic Enforcement Act of 1986 (proposition 65), this information is provided. This law requires that " clear and reasonable warning " be provided to any individual, knowingly or intentionally exposed to any substances identified by the state as being cancer or

Applied Specialties, Inc.

33555 Pin Oak Parkway, Avon Lake, OH
44012

reproductive hazards unless, it can be shown that the exposure poses “no significant risk”. Based on available data, the following chemicals listed by Proposition 65 may be present in this product:

16. OTHER INFORMATION

This information is given without any warranty or representation. We do not assume any legal responsibility for same, nor do we give permission, inducement, or recommendation to practice any patented invention without a license. It is offered solely for your consideration, investigation and verification. Before using any product, read its label carefully and completely.

Revision 2 / Supersedes 3/27/08 / JMJ

Revisions: ANSI format, Section 2 – Fire and Reactivity hazard ratings updated.

Applied Specialties, Inc.

33555 Pin Oak Parkway, Avon Lake, OH
44012

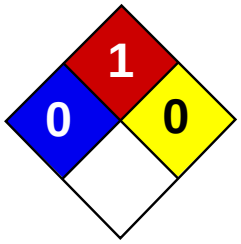

Health	2
Fire	1
Reactivity	0
Personal Protection	H

Material Safety Data Sheet
Propylene glycol MSDS

Section 1: Chemical Product and Company Identification

Product Name: Propylene glycol

Catalog Codes: SLP1162, SLP2974

CAS#: 57-55-6

RTECS: TY2000000

TSCA: TSCA 8(b) inventory: Propylene glycol

CI#: Not applicable.

Synonym: 1,2,-propanediol, 1,2-dihydroxypropane

Chemical Name: Propylene Glycol

Chemical Formula: CH3CHOHCH2OH

Contact Information:

Sciencelab.com, Inc.
14025 Smith Rd.
Houston, Texas 77396

US Sales: **1-800-901-7247**
International Sales: **1-281-441-4400**

Order Online: ScienceLab.com

CHEMTREC (24HR Emergency Telephone), call: 1-800-424-9300

International CHEMTREC, call: 1-703-527-3887

For non-emergency assistance, call: 1-281-441-4400

Section 2: Composition and Information on Ingredients

Composition:

Name	CAS #	% by Weight
Propylene glycol	57-55-6	100

Toxicological Data on Ingredients: Propylene glycol: ORAL (LD50): Acute: 20000 mg/kg [Rat]. 22000 mg/kg [Mouse]. DERMAL (LD50): Acute: 20800 mg/kg [Rabbit].

Section 3: Hazards Identification

Potential Acute Health Effects:
Hazardous in case of ingestion. Slightly hazardous in case of skin contact (irritant, permeator), of eye contact (irritant), of inhalation.

Potential Chronic Health Effects:
Slightly hazardous in case of skin contact (sensitizer). CARCINOGENIC EFFECTS: Not available. MUTAGENIC EFFECTS: Not available. TERATOGENIC EFFECTS: Not available. DEVELOPMENTAL TOXICITY: Not available. The substance may be toxic to central nervous system (CNS). Repeated or prolonged exposure to the substance can produce target organs damage.

Section 4: First Aid Measures

Eye Contact:

Check for and remove any contact lenses. Immediately flush eyes with running water for at least 15 minutes, keeping eyelids open. Cold water may be used. Get medical attention.

Skin Contact:
In case of contact, immediately flush skin with plenty of water. Cover the irritated skin with an emollient. Remove contaminated clothing and shoes. Cold water may be used.Wash clothing before reuse. Thoroughly clean shoes before reuse. Get medical attention.

Serious Skin Contact:
Wash with a disinfectant soap and cover the contaminated skin with an anti-bacterial cream. Seek immediate medical attention.

Inhalation:
If inhaled, remove to fresh air. If not breathing, give artificial respiration. If breathing is difficult, give oxygen. Get medical attention.

Serious Inhalation: Not available.

Ingestion:
Do NOT induce vomiting unless directed to do so by medical personnel. Never give anything by mouth to an unconscious person. If large quantities of this material are swallowed, call a physician immediately. Loosen tight clothing such as a collar, tie, belt or waistband.

Serious Ingestion: Not available.

Section 5: Fire and Explosion Data

Flammability of the Product: May be combustible at high temperature.

Auto-Ignition Temperature: 371°C (699.8°F)

Flash Points: CLOSED CUP: 99°C (210.2°F). OPEN CUP: 107°C (224.6°F) (Cleveland).

Flammable Limits: LOWER: 2.6% UPPER: 12.5%

Products of Combustion: These products are carbon oxides (CO, CO2).

Fire Hazards in Presence of Various Substances: Slightly flammable to flammable in presence of heat.

Explosion Hazards in Presence of Various Substances:
Risks of explosion of the product in presence of mechanical impact: Not available. Risks of explosion of the product in presence of static discharge: Not available.

Fire Fighting Media and Instructions:
SMALL FIRE: Use DRY chemical powder. LARGE FIRE: Use water spray, fog or foam. Do not use water jet.

Special Remarks on Fire Hazards: When heated to decomposition it emits acrid smoke and irritating fumes.

Special Remarks on Explosion Hazards: Not available.

Section 6: Accidental Release Measures

Small Spill:
Dilute with water and mop up, or absorb with an inert dry material and place in an appropriate waste disposal container. Finish cleaning by spreading water on the contaminated surface and dispose of according to local and regional authority requirements.

Large Spill:
Absorb with an inert material and put the spilled material in an appropriate waste disposal. Finish cleaning by spreading water on the contaminated surface and allow to evacuate through the sanitary system. Be careful that the product is not present at a concentration level above TLV. Check TLV on the MSDS and with local authorities.

Section 7: Handling and Storage

Precautions:
Keep away from heat. Keep away from sources of ignition. Empty containers pose a fire risk, evaporate the residue under a fume hood. Ground all equipment containing material. Do not ingest. Do not breathe gas/fumes/ vapor/spray. Wear suitable protective clothing. In case of insufficient ventilation, wear suitable respiratory equipment. If ingested, seek medical advice immediately and show the container or the label. Avoid contact with skin and eyes. Keep away from incompatibles such as oxidizing agents, reducing agents, acids, alkalis, moisture.

Storage:
Hygroscopic. Keep container tightly closed. Keep container in a cool, well-ventilated area. Do not store above 23°C (73.4°F).

Section 8: Exposure Controls/Personal Protection

Engineering Controls:
Provide exhaust ventilation or other engineering controls to keep the airborne concentrations of vapors below their respective threshold limit value. Ensure that eyewash stations and safety showers are proximal to the work-station location.

Personal Protection:
Splash goggles. Lab coat. Vapor respirator. Be sure to use an approved/certified respirator or equivalent. Gloves.

Personal Protection in Case of a Large Spill:
Splash goggles. Full suit. Vapor respirator. Boots. Gloves. A self contained breathing apparatus should be used to avoid inhalation of the product. Suggested protective clothing might not be sufficient; consult a specialist BEFORE handling this product.

Exposure Limits:
TWA: 10 (mg/m3) from AIHA Consult local authorities for acceptable exposure limits.

Section 9: Physical and Chemical Properties

Physical state and appearance: Liquid. (Oily liquid.)

Odor: Practically Odorless.

Taste: Practically Tasteless.

Molecular Weight: 76.1g/mole

Color: Colorless. Clear

pH (1% soln/water): Not available.

Boiling Point: 188°C (370.4°F)

Melting Point: -59°C (-74.2°F)

Critical Temperature: Not available.

Specific Gravity: 1.036 (Water = 1)

Vapor Pressure:
0 kPa (@ 20°C) 0.08 mmHg at 20 C 0.129 mmHg at 25 C

Vapor Density: 2.62 (Air = 1)

Volatility: Not available.

Odor Threshold: Not available.

Water/Oil Dist. Coeff.: The product is more soluble in water; log(oil/water) = -0.9

Ionicity (in Water): Not available.

Dispersion Properties: See solubility in water, acetone.

Solubility: Soluble in cold water, hot water, acetone.

Section 10: Stability and Reactivity Data

Stability: The product is stable.

Instability Temperature: Not available.

Conditions of Instability: Incompatible materials, excess heat, exposure to moist air or water

Incompatibility with various substances: Reactive with oxidizing agents, reducing agents, acids, alkalis.

Corrosivity: Non-corrosive in presence of glass.

Special Remarks on Reactivity:
Hygroscopic; keep container tightly closed. Incompatible with chloroformates, strong acids (nitric acid, hydrofluloric acid), caustics, aliphatic amines, isocyanates, strong oxidizers, acid anhydrides, silver nitrate, reducing agents.

Special Remarks on Corrosivity: Not available.

Polymerization: Will not occur.

Section 11: Toxicological Information

Routes of Entry: Absorbed through skin. Eye contact.

Toxicity to Animals:
Acute oral toxicity (LD50): 18500 mg/kg [Rabbit]. Acute dermal toxicity (LD50): 20800 mg/kg [Rabbit].

Chronic Effects on Humans: May cause damage to the following organs: central nervous system (CNS).

Other Toxic Effects on Humans:
Hazardous in case of ingestion. Slightly hazardous in case of skin contact (irritant, permeator), of inhalation.

Special Remarks on Toxicity to Animals: Not available.

Special Remarks on Chronic Effects on Humans:
May affect genetic material (mutagenic). May cause adverse reproductive effects and birth defects (teratogenic) based on animal test data.

Special Remarks on other Toxic Effects on Humans:
Acute Potential Health Effects: Skin: May cause mild skin irritation. It may be absorbed through the skin and cause systemic effects similar to those of ingestion. Eyes: May cause mild eye irritation with some immediate, transitory stinging, lacrimation, blepharospasm, and mild transient conjunctival hyperemia. There is no residual discomfort or injury once it is washed away. Inhalation: May cause respiratory tract irritation. Ingestion: It may cause gastrointestinal tract irritation. It may affect behavior/central nervous system(CNS depression, general anesthetic, convulsions, seizures, somnolence, stupor, muscle contraction or spasticity, coma), brain (changes in surface EEG), metabolism, blood (intravascular hemolysis, white blood cells - decreased neutrophil function), respiration (respiratory stimulation, chronic pulmonary edema, cyanosis), cardiovascular system(hypotension, bradycardia, arrhythmias, cardiac arrest), endocrine system (hypoglycemia), urinary system (kidneys), and liver. Chronic Potential Health Effects: Skin: Prolonged or repeated skin contact may cause allergic contact dermatitis. Ingestion: Prolonged or repeated ingestion may cause hyperglycemia and may affect behavior/CNS (symptoms similar to that of acute ingestion). Inhalation: Prolonged or repeated inhalation may affect behavior/CNS (with symptoms similar to ingestion), and spleen

Section 12: Ecological Information

Ecotoxicity:
Ecotoxicity in water (LC50): >5000 mg/l 24 hours [Goldfish]. >10000 mg/l 48 hours [guppy]. >10000 mg/l 48 hours [water flea].

BOD5 and COD: Not available.

Products of Biodegradation:
Possibly hazardous short term degradation products are not likely. However, long term degradation products may arise.

Toxicity of the Products of Biodegradation: The products of degradation are less toxic than the product itself.

Special Remarks on the Products of Biodegradation: Not available.

Section 13: Disposal Considerations

Waste Disposal:

Section 14: Transport Information

DOT Classification: Not a DOT controlled material (United States).

Identification: Not applicable.

Special Provisions for Transport: Not applicable.

Section 15: Other Regulatory Information

Federal and State Regulations:
Pennsylvania RTK: Propylene glycol Minnesota: Propylene glycol TSCA 8(b) inventory: Propylene glycol

Other Regulations: EINECS: This product is on the European Inventory of Existing Commercial Chemical Substances.

Other Classifications:

WHMIS (Canada): Not controlled under WHMIS (Canada).

DSCL (EEC):
R21/22- Harmful in contact with skin and if swallowed. S24/25- Avoid contact with skin and eyes.

HMIS (U.S.A.):

Health Hazard: 2

Fire Hazard: 1

Reactivity: 0

Personal Protection: h

National Fire Protection Association (U.S.A.):

Health: 0

Flammability: 1

Reactivity: 0

Specific hazard:

Protective Equipment:
Gloves. Lab coat. Vapor respirator. Be sure to use an approved/certified respirator or equivalent. Splash goggles.

Section 16: Other Information

References:
-Hawley, G.G.. The Condensed Chemical Dictionary, 11e ed., New York N.Y., Van Nostrand Reinold, 1987. -SAX, N.I. Dangerous Properties of Indutrial Materials. Toronto, Van Nostrand Reinold, 6e ed. 1984. -The Sigma-Aldrich Library of Chemical Safety Data, Edition II. -Supplier MSDS -LOLI -RTECS -HSDB

Other Special Considerations: Not available.

Created: 10/10/2005 08:24 PM

Last Updated: 06/09/2012 12:00 PM

The information above is believed to be accurate and represents the best information currently available to us. However, we make no warranty of merchantability or any other warranty, express or implied, with respect to such information, and we assume no liability resulting from its use. Users should make their own investigations to determine the suitability of the information for their particular purposes. In no event shall ScienceLab.com be liable for any claims, losses, or damages of any third party or for lost profits or any special, indirect, incidental, consequential or exemplary damages, howsoever arising, even if ScienceLab.com has been advised of the possibility of such damages.

ATTACHMENT C-2
EXAMPLE DIAGRAMS AND PHOTOGRAPHS OF POTENTIAL RECOVERED MUNITIONS AT RSA-EDS SITE[1,2]

- 4.2-inch Mortar, chemical/smoke
- 81mm Mortar, chemical/smoke, M57
- 105mm Projectile , chemical/smoke, M60
- 105mm Projectile, German, chemical
- 150mm Projectile, German, chemical
- 155mm Projectile, chemical, M110
- 155mm Projectile, chemical/smoke, M104
- 155mm Projectile, chemical/smoke, M105
- 155mm Projectile, chemical/smoke, MKII
- 75mm Projectile, chemical/smoke, MKII
- 75mm Projectile, smoke, M64
- German Traktor Rocket, chemical
- Land Mine, chemical, UK, No. 1 MKI

---

[1] The names of a number of the munitions depicted in this attachment contain the word "gas" instead of "chemical." This terminology was standard nomenclature at the time these munitions were developed as chemical warfare agents in general were called "gases" even though they were not gases at standard temperatures and pressures. Today the word "chemical" is preferred.

[2] These munition diagrams and photographs are examples of the types of items that will be processed in the Explosive Destruction System (EDS) unit at RSA, but the list is not all inclusive. Furthermore, munitions and items that will be processed are recovered and may not contain all components and parts shown in the schematics nor will they be in standard condition. The final decision on whether a particular recovered item will be processed in the EDS will depend on the characteristics of the recovered item and the capabilities of the EDS.

(This page intentionally left blank.)

Projectile, Mortar, 4.2-Inch, Gas or Smoke, M2, M2A1

Tabulated Data		Color Code (old)	
Length:	21.01 inches (533.7 mm) with fuze	Body:	Gray
Diameter:	4.19 inches (106.43 mm)	Markings:	Green, Yellow, or Red
Weight:	24.67 to 24.91 lb	Bands:	Green, Yellow, or Red
Fill:	HS, FS, CG, CNB, CNS		

1 Source: U.S. Army Chemical Materials Agency, *Redstone Arsenal Munitions Field Guide*, Revision 1, April 2011

Projectile, Mortar, 81mm, Gas or Smoke, M57

Tabulated Data		Color Code (old)	
Length:	22.89 inches (581.4 mm)	Body:	Blue-Gray
Diameter:	3.19 inches (81 mm)	Markings:	Yellow or Green
Weight:	12.46 lb	Bands:	Yellow or Green
Fill:	H or FS		

1 Source: U.S. Army Chemical Materials Agency, *Redstone Arsenal Munitions Field Guide*, Revision 1, April 2011

Projectile, 105mm, Gas and Smoke, M60

Tabulated Data		Color Code (old)	
Length:	15.73 inches (399.54 mm)	Body:	Gray
Diameter:	4.13 inches (105 mm)	Markings:	Yellow or Green
Weight:	37.77 lb	Bands:	1 Yellow or 2 Green
Fill:	HS or L		

1 Source: U.S. Army Chemical Materials Agency, *Redstone Arsenal Munitions Field Guide*, Revision 1, April 2011

10.5cm Projectile
FH Gr. Gelbring

Germany
Post-1925

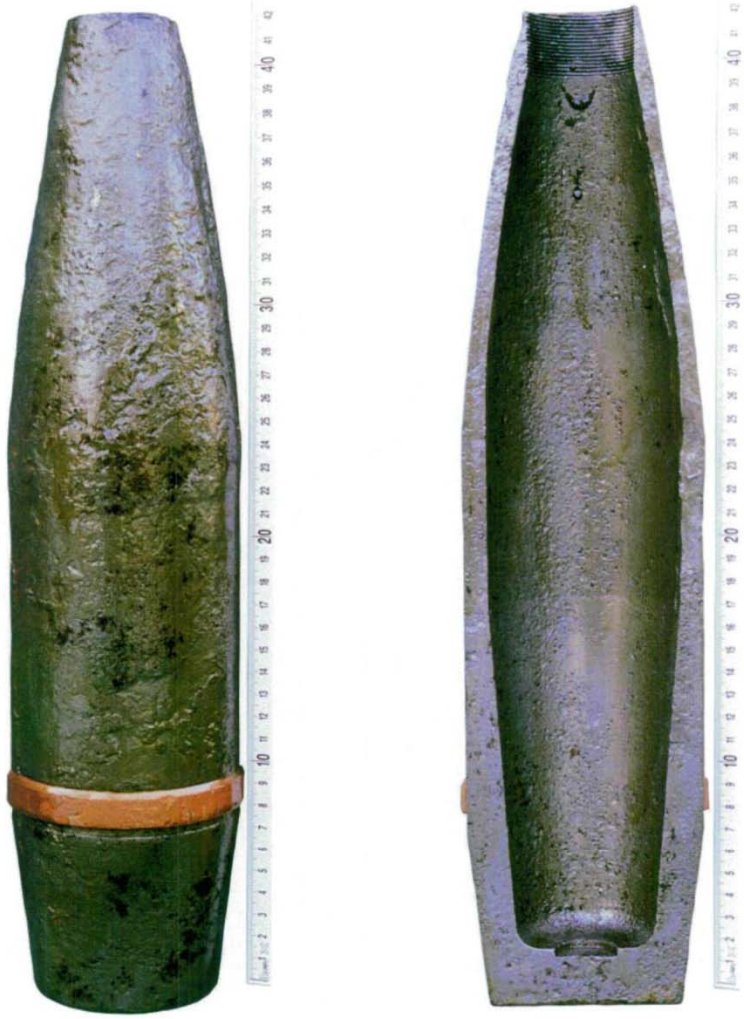

Diameter: 105mm
Length: 422mm, missing the fuze adapter
Chemical Agent: Mustard/arsenol

This projectile has a single copper rotating band. The recess in the bottom of the projectile cavity indicates that it had a narrow full length burster tube.

Source: Organisation for the Prohibition of Chemical Weapons, *Handbook of Pre-1946 Chemical Weapons*, Revision 1, January 2005

15cm Projectile
Gr. 19 Kh. Grunring-Gelb

Germany
Post-1925

Diameter: 150mm
Length: 585mm
Chemical Agent: Lost (mustard) summer lost, or winterlost

This projectile has two copper rotating bands and a filling plug in the side, with a small diameter burster.

Source: Organisation for the Prohibition of Chemical Weapons, *Handbook of Pre-1946 Chemical Weapons*, Revision 1, January 2005

Projectile, 155mm, Gas, M110

Tabulated Data		Color Code (old)	
Length:	28.78 inches (731 mm) with eyebolt lifting plug	Body:	Gray
Diameter:	6.1 inches (155 mm)	Markings:	Green
Weight:	107.34 lb	Bands:	2 Green
Fill:	HS		

Source: U.S. Army Chemical Materials Agency, *Redstone Arsenal Munitions Field Guide*, Revision 1, April 2011

Projectile, 155mm, Gas or Smoke, M104

Tabulated Data		Color Code (old)	
Length:	26.78 inches (680.21 mm) with eyebolt lifting plug	Body:	Gray
Diameter:	6.1 inches (155 mm)	Markings:	Green or Yellow
Weight:	94.9 to 98.8 lb	Bands:	2 Green or 1 Yellow
Fill:	HS		

Source: U.S. Army Chemical Materials Agency, *Redstone Arsenal Munitions Field Guide*, Revision 1, April 2011

Projectile, 155mm, Gas or Smoke, M105

Tabulated Data		Color Code (old)	
Length:	26.78 inches (680.21 mm) with eyebolt lifting plug	Body:	Gray
Diameter:	6.1 inches (155 mm)	Markings:	Green or Yellow
Weight:	97.0 lb	Bands:	2 Green or 1 Yellow
Fill:	HS	Note:	New color code shown

1 Source: U.S. Army Chemical Materials Agency, *Redstone Arsenal Munitions Field Guide*, Revision 1, April 2011

155mm Howitzer Projectile MK II, MK IIA1

United States

Diameter: 155mm
Length: 580mm to 594mm, 577mm as shown on left without adapter booster
Chemical Agent: BA, CA, CG, H/HS (L and R), NC, PG(center), PS, VN; FM and FS smokes

The 155mm MKII projectile was used by the US from WWI to the mid 1940s. The CW projo was a copy of the HE, with two primary differences allowing identification between the types. The high explosive round had a copper base cover attached with lead forced in a groove cut into the base. The CW fill version will normally not have this, though on rare occasions rejected HE rounds could be salvaged and used with CW fill. The CW projectile would also normally have a fuze adapter-booster once filled, to seal the CW agent in by its tapered pipe threads.

Source: Organisation for the Prohibition of Chemical Weapons, *Handbook of Pre-1946 Chemical Weapons*, Revision 1, January 2005

75mm Projectile MKII

United States

Diameter: 75mm
Length: 267mm, without adapter-booster
Chemical Agent: BA, CA, CG, CNS, FM, H/HD/HS, NC, PS

The 75mm MKII projectile was used by the US during the first World War. The CW projectile was a copy of the HE, with two primary differences allowing identification between the types. The high explosive round had a copper base cover attached with lead forced in a groove cut into the base. The CW fill version will normally not have this, though on rare occasions rejected HE rounds could be salvaged and used with CW fill. Secondly, the CW projectile would normally have a hex shaped fuze adapter once filled, to seal the CW agent in by its tapered pipe threads.

Source: Organisation for the Prohibition of Chemical Weapons, *Handbook of Pre-1946 Chemical Weapons*, Revision 1, January 2005

Projectile, 75mm, Chemical, M64

Tabulated Data		Color Code (old)	
Length:	23.49 inches with fuze (59.66 cm)	Body:	Gray
Diameter:	2.95 inches (75 mm)	Markings:	Yellow or Green
Fill:	FM, H, HS or L	Bands:	1 Yellow or 2 Green

1 Source: U.S. Army Chemical Materials Agency, *Redstone Arsenal Munitions Field Guide*, Revision 1, April 2011

Rocket, Chemical, 15cm, Type 41 (Traktor Rocket)

Tabulated Data		Color Code (old)	
Length:	40 inches (101.6 cm)	Body:	Field Gray or Olive Green
Diameter:	6.2 inches (15.75 cm)	Markings:	White or Green
Weight:	74.6 to 78 lb	Bands:	1 Green, 1 Yellow, 1 White, or 1 Blue
Fill:	HN-3, GA/Chlorobenzene or DA/Arsinol		

Source: U.S. Army Chemical Materials Agency, *Redstone Arsenal Munitions Field Guide*, Revision 1, April 2011

UK Chemical Mine, No. 1 MKI

Tabulated Data		Color	
Length:	20 inches (508 mm)	Body:	Gray-Blue
Diameter:	11.25 inches (286 mm)	Markings:	Black
Fill:	HT	Bands:	Yellow

Source: U.S. Army Chemical Materials Agency, *Redstone Arsenal Munitions Field Guide*, Revision 1, April 2011

(This page intentionally left blank.)

ATTACHMENT C-3
CHEMICAL AGENT TREATMENT LEVEL ANALYTICAL RESULTS AND WASTE PROFILES FOR EDS PROCESS WASTE

Potential Chemical Fills:

- Distilled sulfur mustard (HD)
- Sulfur mustard (HS)
- Sulfur mustard and Bis(2-(2-chloroethylthio)ethyl) ether (HT)
- Nitrogen mustard (HN-3)
- Phosgene (CG)
- Lewisite (L)
- Diphenylchloroarsine (DA)
- Phenyldichloroarsine (PD)
- Chloroacetophenone/carbon tetrachloride/benzene mixture (CNB)
- Chloroacetophenone/chloropicrin/chloroform mixture (CNS)
- Chlorosulfonic acid (FS smoke)
- Titanium tetrachloride (FM smoke)

(This page intentionally left blank.)

ATTACHMENT C-3

CHEMICAL AGENT TREATMENT LEVEL ANALYTICAL RESULTS AND WASTE PROFILES FOR EDS PROCESS WASTE

Agent	Waste Analytical Data	Waste Profile	Source
HD/HS/HT	Attached	Attached	PCAPP permit/DAFB
HN-3	Attached	Attached	PBEDS 2013
L	Attached	Attached	Spring Valley 2010
CG	Attached	Data not available	J-Field Testing conducted June 2010
CNB	Attached	Attached	J-Field Testing conducted May-June 2011
CNS	Attached	Attached	J-Field Testing conducted May-June 2011
DA/PD	Attached	Attached	PBEDS 2013
HD+ DA/PD	Data not available	Data not available	-
FS smoke	Attached	Data not available	Former Camp Sibert 2010
FM smoke	Attached	Attached	RSA 2010

(This page intentionally left blank.)

Environmental Monitoring Laboratory

ECBC Environmental Monitoring Laboratory
Building 34-111
Pine Bluff Arsenal, AR 71602-9500
Phone: 870-540-3291
Fax: 870-540-3515

Analytical Narrative

Client/Project: JPM-Elimination/ Pine Bluff EDS	**Date Received:** 11/14/2013
Extraction Analyst: Stephen Perkins	**Date Extracted:** 11/14/2013
Analyst: Stephen Perkins	**Batch No(s):** PB13111401
Reviewer: John Schwarz	**ECBC Sample No(s):** PBEDS140003

Sample Summary

One liquid (90% MEA) sample and associated quality control were analyzed using GCMS on 11/14/2013 following the procedures specified in IOP MT-60, Revision 0, for the following: HD, HN-3, 1,4-Dithiane, and 1,4-Thioxane

The sample as received was free of all analytes of interest to the laboratory Limit of Quantitation (LOQ) with the following exception.

1,4-Dithiane was detected in the sample at a concentration above the LOQ.

Sample & Method Performance

Tuning: All tune criteria were met.

Calibration: All initial and continuing calibration criteria were met.

Internal Standard Responses: All internal standard responses met method requirements.

Surrogate Recoveries: All surrogate recoveries met method requirements.

LCS/LCSD(s): All quality control criteria were met for the LCS/LCSD.

Method Blank(s): The method blank was free of the analytes of interest to one-half the laboratory LOQ.

MS/MSD(s): All quality control criteria were met for the MS/MSD with the following exceptions. The MSD recovery for 1,4-Dithiane was above the QC limits. Additionally, the relative percent difference for 1,4-Dithiane was greater than the QC limits. These exceptions do not affect the results reported.

CERTIFICATE OF ANALYSIS
This report shall not be reproduced, except in full,
Without the written consent of ECBC Environmental Monitoring Laboratory.
Please provide us feedback:
http://www.surveymonkey.com/s/CBARR-EML

Environmental Monitoring Laboratory

U.S. ARMY EDGEWOOD CHEMICAL BIOLOGICAL CENTER
CHEMICAL BIOLOGICAL APPLICATIONS & RISK REDUCTION
CBARR
BUSINESS UNIT
The Recognized Leader in Providing CB Solutions

Analytical Results

PART 1 MBFORM-41 Revision 12 March 2010

PROJECT:	PB EDS		
Reporting POC:	Ed Parshley of ECBC		CMA: Steven Norman
Phone/Fax:	**W:** (410) 436-6993	**F:**	edward.r.parshley.civ@mail.mil

Client Sample ID PBA-HN3-20131114-DL-01
Sample Date 11/14/2013 **Matrix** MEA
Date Rec'd 11/14/2013 **Remarks**

Lab ID: PBEDS140003 **Batch #: PB13111401** **Method:** MT-60

Analyte		*Result*	*Units*	*LOQ*	*Preparation*	*Analysis*	*Remarks*
1,4-Dithiane		3200	ug/L	630	11/14/2013	11/14/2013	
1,4-Thioxane	<	560	ug/L	560			
HD	<	620	ug/L	620			
HN-3	<	650	ug/L	650			
(Surrogate) BFB		102	%R				

All results reported to two significant figures. LOQ = Limit of Quantitation. D = Sample was diluted. E = Estimated value; result above upper calibration level. J = Detected above the method detection limit but below the LOQ. Result is an estimated value. Q = Unresolvable anomaly in QC results. B = Analyte detected in Method Blank.

Friday, November 15, 2013

Environmental Monitoring Laboratory

U.S. ARMY EDGEWOOD CHEMICAL BIOLOGICAL CENTER
CHEMICAL BIOLOGICAL APPLICATIONS & RISK REDUCTION
CBARR
BUSINESS UNIT
The Recognized Leader in Providing CB Solutions

Analytical QC Results

PART 2 MBFORM-41 Revision 12 March 2010

PROJECT: PB EDS
Reporting POC: Ed Parshley of ECBC CMA: Steven Norman
Phone/Fax: W: (410) 436-6993 F: edward.r.parshley.civ@mail.mil

Client Sample ID PBA-HN3-20131114-DL-01
Sample Date 11/14/2013 **Matrix** MEA
Date Rec'd 11/14/2013 **Remarks**

Lab ID: PBEDS140003 **Batch #: PB13111401** **Method:** MT-60

Matrix Spike

Analyte	*Result*	*Units*	*LOQ*	*Preparation*	*Analysis*	*Remarks*
1,4-Dithiane	86	%R		11/14/2013	11/14/2013	
1,4-Thioxane	75	%R				
HD	85	%R				
HN-3	85	%R				
(Surrogate) BFB	82	%R				

Lab ID: PBEDS140003 **Batch #: PB13111401** **Method:** MT-60

Matrix Spike Duplicate

Analyte	*Result*	*Units*	*LOQ*	*Preparation*	*Analysis*	*Remarks*
1,4-Dithiane	153	%R		11/14/2013	11/14/2013	
1,4-Thioxane	83	%R				
HD	96	%R				
HN-3	99	%R				
(Surrogate) BFB	96	%R				

Client Sample ID PB13111401-LCS
Sample Date 11/14/2013 **Matrix** MEA
Date Rec'd 11/14/2013 **Remarks**

Lab ID: PBEDS140007 **Batch #: PB13111401** **Method:** MT-60

Lab Control Spike

Analyte	*Result*	*Units*	*LOQ*	*Preparation*	*Analysis*	*Remarks*
1,4-Dithiane	91	%R		11/14/2013	11/14/2013	
1,4-Thioxane	79	%R				
HD	88	%R				
HN-3	97	%R				
(Surrogate) BFB	101	%R				

MS/MSD and LCS/LCSD results are in % recovery. LOQ = Limit of Quantitation. D = Sample was diluted. E = Estimated value; result above upper calibration level. J = Detected above the method detection limit but below the LOQ. Result is an estimated value. Q = Unresolvable anomaly in QC results.

Friday, November 15, 2013

Client Sample ID PB13111401-LCSD
Sample Date 11/14/2013 **Matrix** MEA
Date Rec'd 11/14/2013 **Remarks**

Lab ID: PBEDS140008 **Batch #: PB13111401** **Method:** MT-60

Lab Control Spike Duplicate

Analyte	*Result*	*Units*	*LOQ*	*Preparation*	*Analysis*	*Remarks*
1,4-Dithiane	85	%R		11/14/2013	11/14/2013	
1,4-Thioxane	75	%R				
HD	83	%R				
HN-3	90	%R				
(Surrogate) BFB	90	%R				

Client Sample ID PB13111401-MB
Sample Date 11/14/2013 **Matrix** MEA
Date Rec'd 11/14/2013 **Remarks**

Lab ID: PBEDS140009 **Batch #: PB13111401** **Method:** MT-60

Method Blank

Analyte		*Result*	*Units*	*LOQ*	*Preparation*	*Analysis*	*Remarks*
1,4-Dithiane	<	310	ug/L	630	11/14/2013	11/14/2013	
1,4-Thioxane	<	280	ug/L	560			
HD	<	310	ug/L	620			
HN-3	<	320	ug/L	650			
(Surrogate) BFB		90	%R				

MS/MSD and LCS/LCSD results are in % recovery. LOQ = Limit of Quantitation. D = Sample was diluted. E = Estimated value; result above upper calibration level. J = Detected above the method detection limit but below the LOQ. Result is an estimated value. Q = Unresolvable anomaly in QC results.

Friday, November 15, 2013

CH Confirmation # WO7T8623169

Please print or type. (Form designed for use on elite (12-pitch) typewriter.) Load# 13025 Form Approved. OMB No. 2050-0039

UNIFORM HAZARDOUS WASTE MANIFEST

1. Generator ID Number: AR0213820707
2. Page 1 of: 1
3. Emergency Response Phone: 800-424-9300
4. Manifest Tracking Number: 000584718 FLE

5. Generator's Name and Mailing Address
Pine Bluff Arsenal
10020 Kabrich Circle, Bldg. 10-030
Pine Bluff, AR 71602
Generator's Phone: 870-540-2807 Doug McKim

Generator's Site Address (if different than mailing address): Same---
Generator State ID# D0005

6. Transporter 1 Company Name: Clean Harbors Environmental Services (281) 930-2300 Phone
U.S. EPA ID Number: MAD039322250

7. Transporter 2 Company Name: ~~Clean Harbors Deer Park LP~~
U.S. EPA ID Number:

8. Designated Facility Name and Site Address
Clean Harbors Deer Park LP
2027 Battleground Road
LaPorte, TX 77571
Facility's Phone: 281-930-2300
U.S. EPA ID Number: Facility ID# 50089
TXD255141378

9a. HM	9b. U.S. DOT Description (including Proper Shipping Name, Hazard Class, ID Number, and Packing Group (if any))	10. Containers No.	10. Containers Type	11. Total Quantity	12. Unit Wt./Vol.	13. Waste Codes
X	1. RQ, Hazardous Waste Liquid, n.o.s., (Benzene & Lead), 9, NA3082, PGIII ERG # 171	0 0 3	D M	Est. 1,200	P	OUTS219H D004 D006 D008 D018 D019 D022 D028 D039 D040 D043
X	2. RQ, Hazardous Waste Liquid, n.o.s., (Mercury), 9, NA3082, PGIII ERG # 171	0 0 9	D M	Est. 3,600	P	OUTS119H D004 D009 D018 D022 D043
	3.					
	4.					

14. Special Handling Instructions and Additional Information
"Certificate of Disposal Required"
9a-1) Approval # CH196898 PBEDS CB&I PO# 200017
9a-2) Approval # CH196896 PBEDS CB&I PO# 200017
24-Hour Emergency Response Information 800-424-9300 provided by Offeror CB&I via contract with CHEMTREC.
Truck# 1227 Trailer# 538725

15. **GENERATOR'S/OFFEROR'S CERTIFICATION:** I hereby declare that the contents of this consignment are fully and accurately described above by the proper shipping name, and are classified, packaged, marked and labeled/placarded, and are in all respects in proper condition for transport according to applicable international and national governmental regulations. If export shipment and I am the Primary Exporter, I certify that the contents of this consignment conform to the terms of the attached EPA Acknowledgment of Consent.
I certify that the waste minimization statement identified in 40 CFR 262.27(a) (if I am a large quantity generator) or (b) (if I am a small quantity generator) is true.

Generator's/Offeror's Printed/Typed Name: Doug McKim for PBA
Signature: On behalf of PBA
Month 12 Day 16 Year 13

16. International Shipments ☐ Import to U.S. ☐ Export from U.S. Port of entry/exit:
Transporter signature (for exports only): Date leaving U.S.:

17. Transporter Acknowledgment of Receipt of Materials
Transporter 1 Printed/Typed Name: Anthony Patterson
Signature
Month 12 Day 16 Year 13
Transporter 2 Printed/Typed Name
Signature
Month Day Year

18. Discrepancy
18a. Discrepancy Indication Space ☐ Quantity ☐ Type ☐ Residue ☐ Partial Rejection ☐ Full Rejection
Manifest Reference Number:

18b. Alternate Facility (or Generator)
U.S. EPA ID Number
Facility's Phone:

18c. Signature of Alternate Facility (or Generator)
Month Day Year

19. Hazardous Waste Report Management Method Codes (i.e., codes for hazardous waste treatment, disposal, and recycling systems)

1.	2.	3.	4.
H040	H040		

20. Designated Facility Owner or Operator: Certification of receipt of hazardous materials covered by the manifest except as noted in Item 18a
Printed/Typed Name
Signature
Month Day Year

GENERATOR — INT'L — TRANSPORTER — DESIGNATED FACILITY

EPA Form 8700-22 (Rev. 3-05) Previous editions are obsolete.

DESIGNATED FACILITY TO DESTINATION STATE (IF REQUIRED)

Truck/Transporter Drum Inventory Sheet
CBI Federal Services/Pine Bluff Arsenal

Manifest 000584718FLE
Load # 13025
Date 12/16/13

Manifest # Line	Drum Number	Liquid Solid	Size/Type of Drum	Approval Number	PO Number	Manifest # Line	Drum Number	Liquid Solid	Size/Type of Drum	Approval Number	PO Number
9a-1	EDB-3270	Liquid	55-Gal Steel	CH196898	200017						
9a-1	EDB-3273	Liquid	55-Gal Steel	CH196898	200017						
9a-1	EDB-3280	Liquid	55-Gal Steel	CH196898	200017						
9a-2	EDB-3268	Liquid	55-Gal Steel	CH196896	200017						
9a-2	EDB-3271	Liquid	55-Gal Steel	CH196896	200017						
9a-2	EDB-3274	Liquid	55-Gal Steel	CH196896	200017						
9a-2	EDB-3276	Liquid	55-Gal Steel	CH196896	200017						
9a-2	EDB-3277	Liquid	55-Gal Steel	CH196896	200017						
9a-2	EDB-3278	Liquid	55-Gal Steel	CH196896	200017						
9a-2	EDB-3279	Liquid	55-Gal Steel	CH196896	200017						
9a-2	EDB-3282	Liquid	55-Gal Steel	CH196896	200017						
9a-2	EDB-3283	Liquid	55-Gal Steel	CH196896	200017						
			Total Drums Shipped (12)								

HIGHER HAZARD WASTE MATERIAL PROFILE CERTIFICATION FORM

Profile # CH196898

Please complete the following for the above listed profile:

Generator : Pine Bluff Arsenal

Address: 10020 Kabrich Circle, Bldg 10-030, Pine Bluff, AR 71602

Contact Name:
Don Seem with CB&I 314-606-0363

Identify Hazard Descriptions(s)
Mustard agent

Please describe modifications made to the waste or packaging. Utilize this space below to indicate any changes, modifications or updates required to meet Clean Harbors waste acceptance policies.

All waste will be 3xxx certified per Army pamphlet 385-61, "Toxic Chemical Agent Safety standards".

Changes in the process of generation or characteristics may necessitate submission of a new profile for the waste stream.

This document certifies that the above listed material(s) have been properly stabilized/deactivated in accordance with industry accepted best management practices and procedures. We further certify that the material(s) is/are stable for handling and transportation under normal conditions. Company shall indemnify and hold harmless Clean Harbors Environmental Services, Inc. from any damages or injuries arising from this certification's failure to be true, accurate or complete.

Signature Doug McKim Title Environmental Engineer

Printed Name Doug McKim Date 12-16-13

CleanHarbors

WASTE MATERIAL PROFILE SHEET

Clean Harbors Profile No. CH196898

A. GENERAL INFORMATION

GENERATOR EPA ID #/REGISTRATION # *AR0213820707* GENERATOR NAME: *Pine Bluff Arsenal*

GENERATOR CODE (Assigned by Clean Harbors) *PI0391* CITY *Pine Bluff* STATE/PROVINCE *AR* ZIP/POSTAL CODE *71602*

ADDRESS *10020 Kabrich Circle* PHONE: (419) 425-6067

CUSTOMER CODE (Assigned by Clean Harbors) *ITC0638* CUSTOMER NAME: *Shaw Environmental*

ADDRESS *16406 US Route 224 East* CITY *Findlay* STATE/PROVINCE *OH* ZIP/POSTAL CODE *45840*

B. WASTE DESCRIPTION

WASTE DESCRIPTION: *MEA Neutralent*

PROCESS GENERATING WASTE: Waste Generated from Explosive Destruction System

IS THIS WASTE CONTAINED IN SMALL PACKAGING CONTAINED WITHIN A LARGER SHIPPING CONTAINER ? No

C. PHYSICAL PROPERTIES (at 25C or 77F)

PHYSICAL STATE
- SOLID WITHOUT FREE LIQUID
- POWDER
- MONOLITHIC SOLID
- [x] LIQUID WITH NO SOLIDS
- LIQUID/SOLID MIXTURE
- % FREE LIQUID
- % SETTLED SOLID
- % TOTAL SUSPENDED SOLID
- SLUDGE
- GAS/AEROSOL

NUMBER OF PHASES/LAYERS
[x] 1 2 3

% BY VOLUME (Approx.)

TOP	0.00
MIDDLE	0.00
BOTTOM	0.00

VISCOSITY (If liquid present)
- [x] 1 - 100 (e.g. Water)
- 101 - 500 (e.g. Motor Oil)
- 501 - 10,000 (e.g. Molasses)
- > 10,000

COLOR
Clear

ODOR
- [x] NONE
- MILD
- STRONG

Describe:

BOILING POINT °F (°C)
- <= 95 (<=35)
- 95 - 100 (35-38)
- 101 - 129 (38-54)
- [x] >= 130 (>54)

MELTING POINT °F (°C)
- < 140 (<60)
- 140-200 (60-93)
- > 200 (>93)

TOTAL ORGANIC CARBON
- <= 1%
- 1-9%
- [x] >= 10%

FLASH POINT °F (°C)
- < 73 (<23)
- 73 - 100 (23-38)
- 101 -140 (38-60)
- 141 -200 (60-93)
- [x] > 200 (>93)

pH
- <= 2
- 2.1 - 6.9
- 7 (Neutral)
- [x] 7.1 - 12.4
- >= 12.5

SPECIFIC GRAVITY
- < 0.8 (e.g. Gasoline)
- 0.8-1.0 (e.g. Ethanol)
- [x] 1.0 (e.g. Water)
- 1.0-1.2 (e.g. Antifreeze)
- > 1.2 (e.g. Methylene Chloride)

ASH
- < 0.1
- 0.1 - 1.0
- 1.1 - 5.0
- 5.1 - 20.0
- > 20
- [x] Unknown

BTU/LB (MJ/kg)
- < 2,000 (<4.6)
- 2,000-5,000 (4.6-11.6)
- [x] 5,000-10,000 (11.6-23.2)
- > 10,000 (>23.2)

Actual:

D. COMPOSITION (List the complete composition of the waste, include any inert components and/or debris. Ranges for individual components are acceptable. If a trade name is used, please supply an MSDS. Please do not use abbreviations.)

CHEMICAL	MIN	--	MAX	UOM
1,2-DICHLOROETHANE		--		Trace
ARSENIC	1.0000000	--	100.0000000	PPM
BENZENE	0.0000000	--	1.0000000	%
CADMIUM		--		Trace
CARBON TETRACHLORIDE		--		Trace
CHLOROFORM		--		Trace
LEAD		--		Trace
MONOETHANOLAMINE	35.0000000	--	65.0000000	%
MUSTARD	0.0000000	--	50.0000000	PPM
SODIUM HYPOCHLORITE	1.0000000	--	2.0000000	%

DOES THIS WASTE CONTAIN ANY HEAVY GAUGE METAL DEBRIS OR OTHER LARGE OBJECTS (EX., METAL PLATE OR PIPING >1/4" THICK OR >12" LONG, METAL REINFORCED HOSE >12" LONG, METAL WIRE >12" LONG, METAL VALVES, PIPE FITTINGS, CONCRETE REINFORCING BAR OR PIECES OF CONCRETE >3")? YES [x] NO

If yes, describe, including dimensions:

DOES THIS WASTE CONTAIN ANY METALS IN POWDERED OR OTHER FINELY DIVIDED FORM? YES [x] NO

DOES THIS WASTE CONTAIN OR HAS IT CONTACTED ANY OF THE FOLLOWING: ANIMAL WASTES, HUMAN BLOOD, BLOOD PRODUCTS, BODY FLUIDS, MICROBIOLOGICAL WASTE, PATHOLOGICAL WASTE, HUMAN OR ANIMAL DERIVED SERUMS OR PROTEINS OR ANY OTHER POTENTIALLY INFECTIOUS MATERIAL? YES [x] NO

I acknowledge that this waste material is neither infectious nor does it contain any organism known to be a threat to human health. This certification is based on my knowledge of the material. Select the answer below that applies:

The waste was never exposed to potentially infectious material. YES NO

Chemical disinfection or some other form of sterilization has been applied to the waste. YES NO

I ACKNOWLEDGE THAT THIS PROFILE MEETS THE CLEAN HARBORS BATTERY PACKAGING REQUIREMENTS. YES NO

I ACKNOWLEDGE THAT MY FRIABLE ASBESTOS WASTE IS DOUBLE BAGGED AND WETTED. YES NO

SPECIFY THE SOURCE CODE ASSOCIATED WITH THE WASTE. *G19* SPECIFY THE FORM CODE ASSOCIATED WITH THE WASTE. *W113*

Report Printed On : Thursday, May 30, 2013 /WINWEB/Profile\Waste Profile.rdl Page 1 of 4

CleanHarbors

Clean Harbors Profile No. CH196898

E. CONSTITUENTS

Are these values based on testing or knowledge? ☑ Knowledge Testing

If based on knowledge, please describe in detail, the rationale applied to identify and characterize the waste material. Please include reference to Material Safety Data Sheets (MSDS) when applicable. Include the chemical or trade-name represented by the MSDS, and or detailed process or operating procedures which generate the waste.

Generator created profile from analytical..will be scanned w ith profile.

Please indicate which constituents below apply. Concentrations must be entered when applicable to assist in accurate review and expedited approval of your waste profile. Please note that the total regulated metals and other constituents sections require answers.

RCRA	REGULATED METALS	REGULATORY LEVEL (mg/l)	TCLP mg/l	TOTAL	UOM	NOT APPLICABLE
D004	ARSENIC	5.0	5.0000	5.0000000	PPM	
D005	BARIUM	100.0	0.9000	0.9000000	PPM	
D006	CADMIUM	1.0	0.8000	0.8000000	PPM	
D007	CHROMIUM	5.0	1.0000	1.0000000	PPM	
D008	LEAD	5.0	5.5000	5.5000000	PPM	
D009	MERCURY	0.2	0.0026	0.0030000	PPM	
D010	SELENIUM	1.0	0.9000	0.9000000	PPM	
D011	SILVER	5.0	0.4000	0.4000000	PPM	

	VOLATILE COMPOUNDS	
D018	BENZENE	0.5
D019	CARBON TETRACHLORIDE	0.5
D021	CHLOROBENZENE	100.0
D022	CHLOROFORM	6.0
D028	1,2-DICHLOROETHANE	0.5
D029	1,1-DICHLOROETHYLENE	0.7
D035	METHYL ETHYL KETONE	200.0
D039	TETRACHLOROETHYLENE	0.7
D040	TRICHLOROETHYLENE	0.5
D043	VINYL CHLORIDE	0.2
	SEMI-VOLATILE COMPOUNDS	
D023	o-CRESOL	200.0
D024	m-CRESOL	200.0
D025	p-CRESOL	200.0
D026	CRESOL (TOTAL)	200.0
D027	1,4-DICHLOROBENZENE	7.5
D030	2,4-DINITROTOLUENE	0.13
D032	HEXACHLOROBENZENE	0.13
D033	HEXACHLOROBUTADIENE	0.5
D034	HEXACHLOROETHANE	3.0
D036	NITROBENZENE	2.0
D037	PENTACHLOROPHENOL	100.0
D038	PYRIDINE	5.0
D041	2,4,5-TRICHLOROPHENOL	400.0
D042	2,4,6-TRICHLOROPHENOL	2.0
	PESTICIDES AND HERBICIDES	
D012	ENDRIN	0.02
D013	LINDANE	0.4
D014	METHOXYCHLOR	10.0
D015	TOXAPHENE	0.5
D016	2,4-D	10.0
D017	2,4,5-TP (SILVEX)	1.0
D020	CHLORDANE	0.03
D031	HEPTACHLOR (AND ITS EPOXIDE)	0.008

OTHER CONSTITUENTS	MAX	UOM	NOT APPLICABLE
BROMINE			☑
CHLORINE	1.0000	%	
FLUORINE			☑
IODINE			☑
SULFUR			☑
POTASSIUM			☑
SODIUM			☑
AMMONIA			☑
CYANIDE AMENABLE			☑
CYANIDE REACTIVE			☑
CYANIDE TOTAL			☑
SULFIDE REACTIVE	28.0000	PPM	

HOCs

☑ NONE
< 1000 PPM
>= 1000 PPM

PCBs

☑ NONE
< 50 PPM
>=50 PPM

IF PCBS ARE PRESENT, IS THE WASTE REGULATED BY TSCA 40 CFR 761?

YES ☑ NO

ADDITIONAL HAZARDS

DOES THIS WASTE HAVE ANY UNDISCLOSED HAZARDS OR PRIOR INCIDENTS ASSOCIATED WITH IT, WHICH COULD AFFECT THE WAY IT SHOULD BE HANDLED?

YES ☑ NO (If yes, explain)

CHOOSE ALL THAT APPLY

DEA REGULATED SUBSTANCE	EXPLOSIVE	FUMING	OSHA REGULATED CARCINOGENS
POLYMERIZABLE	RADIOACTIVE	REACTIVE MATERIAL	☑ NONE OF THE ABOVE

CleanHarbors

Clean Harbors Profile No. CH196898

F. REGULATORY STATUS

✓ YES NO USEPA HAZARDOUS WASTE?
D004 D006 D008 D018 D019 D022 D028 D039 D040 D043

YES ✓ NO DO ANY STATE WASTE CODES APPLY?

Texas Waste Code *OUTS219H*

YES ✓ NO DO ANY CANADIAN PROVINCIAL WASTE CODES APPLY?

✓ YES NO IS THIS WASTE PROHIBITED FROM LAND DISPOSAL WITHOUT FURTHER TREATMENT PER 40 CFR PART 268?

LDR CATEGORY: *This is subject to LDR.*
VARIANCE INFO:

YES ✓ NO IS THIS A UNIVERSAL WASTE?

YES NO IS THE GENERATOR OF THE WASTE CLASSIFIED AS CONDITIONALLY EXEMPT SMALL QUANTITY GENERATOR (CESQG)?

YES ✓ NO IS THIS MATERIAL GOING TO BE MANAGED AS A RCRA EXEMPT COMMERCIAL PRODUCT, WHICH IS FUEL (40 CFR 261.2 (C)(2)(ii))?

YES ✓ NO DOES TREATMENT OF THIS WASTE GENERATE A F006 OR F019 SLUDGE?

YES ✓ NO IS THIS WASTE STREAM SUBJECT TO THE INORGANIC METAL BEARING WASTE PROHIBITION FOUND AT 40 CFR 268.3(C)?

✓ YES NO DOES THIS WASTE CONTAIN VOC'S IN CONCENTRATIONS >=500 PPM?

YES ✓ NO DOES THE WASTE CONTAIN GREATER THAN 20% OF ORGANIC CONSTITUENTS WITH A VAPOR PRESSURE >= .3KPA (.044 PSIA)?

YES ✓ NO DOES THIS WASTE CONTAIN AN ORGANIC CONSTITUENT WHICH IN ITS PURE FORM HAS A VAPOR PRESSURE > 77 KPA (11.2 PSIA)?

YES ✓ NO IS THIS CERCLA REGULATED (SUPERFUND) WASTE ?

YES ✓ NO IS THE WASTE SUBJECT TO ONE OF THE FOLLOWING NESHAP RULES?

Hazardous Organic NESHAP (HON) rule (subpart G) Pharmaceuticals production (subpart GGG)

✓ YES NO IF THIS IS A US EPA HAZARDOUS WASTE, DOES THIS WASTE STREAM CONTAIN BENZENE?

YES ✓ NO Does the waste stream come from a facility with one of the SIC codes listed under benzene NESHAP or is this waste regulated under the benzene NESHAP rules because the original source of the waste is from a chemical manufacturing, coke by-product recovery, or petroleum refinery process?

YES NO Is the generating source of this waste stream a facility with Total Annual Benzene (TAB) >10 Mg/year?

What is the TAB quantity for your facility? [ ] Megagram/year (1 Mg = 2,200 lbs)

The basis for this determination is: Knowledge of the Waste Or Test Data Knowledge Testing

Describe the knowledge :

G. DOT/TDG INFORMATION

DOT/TDG PROPER SHIPPING NAME:

NA3082, HAZARDOUS WASTE, LIQUID, N.O.S., (BENZENE, LEAD), 9, PG III

H. TRANSPORTATION REQUIREMENTS

ESTIMATED SHIPMENT FREQUENCY ✓ ONE TIME WEEKLY MONTHLY QUARTERLY YEARLY OTHER *Other*

✓ **CONTAINERIZED**

0-50 CONTAINERS/SHIPMENT

STORAGE CAPACITY: *50*

CONTAINER TYPE:

CUBIC YARD BOX PALLET

TOTE TANK ✓ DRUM

OTHER:

DRUM SIZE: *55*

BULK LIQUID

GALLONS/SHIPMENT: *0 Min -0 Max* GAL.

BULK SOLID

SHIPMENT UOM: TON YARD

TONS/YARDS/SHIPMENT: *0 Min - 0 Max*

I. SPECIAL REQUEST

COMMENTS OR REQUESTS:

GENERATOR'S CERTIFICATION

I certify that I am authorized to execute this document as an authorized agent. I hereby certify that all information submitted in this and attached documents is correct to the best of my knowledge. I also certify that any samples submitted are representative of the actual waste. If Clean Harbors discovers a discrepancy during the approval process, Generator grants Clean Harbors the authority to amend the profile, as Clean Harbors deems necessary, to reflect the discrepancy.

AUTHORIZED SIGNATURE	NAME (PRINT)	TITLE	DATE
Doug McKim	Doug McKim	Environmental Engineer	6/3/2013

Clean Harbors Profile No. CH196898

Addendum

D. COMPOSITION

CHEMICAL	MIN	--	MAX	UOM
TETRACHLOROETHYLENE		--		Trace
TRICHLOROETHYENE		--		Trace
VINYL CHLORIDE		--		Trace
WATER	35.0000000	--	65.0000000	%

HIGHER HAZARD WASTE MATERIAL PROFILE CERTIFICATION FORM

Profile # CH196896

Please complete the following for the above listed profile:

Generator : Pine Bluff Arsenal

Address: 10020 Kabrich Circle, Bldg 10-030, Pine Bluff, AR 71602

Contact Name:
Don Seem with CB&I 314-606-0363

Identify Hazard Descriptions(s)
Mustard agent

Please describe modifications made to the waste or packaging. Utilize this space below to indicate any changes, modifications or updates required to meet Clean Harbors waste acceptance policies.

All waste will be 3xxx certified per Army pamphlet 385-61, "Toxic Chemical Agent Safety standards".

Changes in the process of generation or characteristics may necessitate submission of a new profile for the waste stream.

This document certifies that the above listed material(s) have been properly stabilized/deactivated in accordance with industry accepted best management practices and procedures. We further certify that the material(s) is/are stable for handling and transportation under normal conditions. Company shall indemnify and hold harmless Clean Harbors Environmental Services, Inc. from any damages or injuries arising from this certification's failure to be true, accurate or complete.

Signature Doug McKim Title Environmental Engineer

Printed Name Doug McKim Date 12/16/13

WASTE MATERIAL PROFILE SHEET

Clean Harbors Profile No. CH196896

A. GENERAL INFORMATION

GENERATOR EPA ID #/REGISTRATION # *AR0213820707* GENERATOR NAME: *Pine Bluff Arsenal*

GENERATOR CODE (Assigned by Clean Harbors) *PI0391* CITY *Pine Bluff* STATE/PROVINCE *AR* ZIP/POSTAL CODE *71602*

ADDRESS *10020 Kabrich Circle* PHONE: (419) 425-6067

CUSTOMER CODE (Assigned by Clean Harbors) *ITC0638* CUSTOMER NAME: *Shaw Environmental*

ADDRESS *16406 US Route 224 East* CITY *Findlay* STATE/PROVINCE *OH* ZIP/POSTAL CODE *45840*

B. WASTE DESCRIPTION

WASTE DESCRIPTION: *EDS Rinsate*

PROCESS GENERATING WASTE: **Waste generated from Explosive Destruction System - see attachment**

IS THIS WASTE CONTAINED IN SMALL PACKAGING CONTAINED WITHIN A LARGER SHIPPING CONTAINER ? **No**

C. PHYSICAL PROPERTIES (at 25C or 77F)

PHYSICAL STATE
- SOLID WITHOUT FREE LIQUID
- POWDER
- MONOLITHIC SOLID
- [x] LIQUID WITH NO SOLIDS
- LIQUID/SOLID MIXTURE
  - % FREE LIQUID
  - % SETTLED SOLID
  - % TOTAL SUSPENDED SOLID
- SLUDGE
- GAS/AEROSOL

NUMBER OF PHASES/LAYERS
- [x] 1 2 3

% BY VOLUME (Approx.)
- TOP *0.00*
- MIDDLE *0.00*
- BOTTOM *0.00*

VISCOSITY (If liquid present)
- [x] 1 - 100 (e.g. Water)
- 101 - 500 (e.g. Motor Oil)
- 501 - 10,000 (e.g. Molasses)
- > 10,000

COLOR
Clear

ODOR
- [x] NONE
- MILD
- STRONG

Describe:

BOILING POINT °F (°C)
- <= 95 (<=35)
- 95 - 100 (35-38)
- 101 - 129 (38-54)
- [x] >= 130 (>54)

MELTING POINT °F (°C)
- < 140 (<60)
- 140-200 (60-93)
- > 200 (>93)

TOTAL ORGANIC CARBON
- <= 1%
- 1-9%
- [x] >= 10%

FLASH POINT °F (°C)
- < 73 (<23)
- 73 - 100 (23-38)
- 101 -140 (38-60)
- 141 -200 (60-93)
- [x] > 200 (>93)

pH
- <= 2
- 2.1 - 6.9
- 7 (Neutral)
- [x] 7.1 - 12.4
- >= 12.5

SPECIFIC GRAVITY
- < 0.8 (e.g. Gasoline)
- 0.8-1.0 (e.g. Ethanol)
- [x] 1.0 (e.g. Water)
- 1.0-1.2 (e.g. Antifreeze)
- > 1.2 (e.g. Methylene Chloride)

ASH
- < 0.1
- 0.1 - 1.0
- 1.1 - 5.0
- 5.1 - 20.0
- > 20
- [x] Unknown

BTU/LB (MJ/kg)
- [x] < 2,000 (<4.6)
- 2,000-5,000 (4.6-11.6)
- 5,000-10,000 (11.6-23.2)
- > 10,000 (>23.2)

Actual:

D. COMPOSITION (List the complete composition of the waste, include any inert components and/or debris. Ranges for individual components are acceptable. If a trade name is used, please supply an MSDS. Please do not use abbreviations.)

CHEMICAL	MIN	--	MAX	UOM
ARSENIC	5.0000000	--	100.0000000	PPM
BENZENE	0.0000000	--	1.0000000	%
CHLOROFORM		--		Trace
MERCURY		--		Trace
MONOETHANOLAMINE	5.0000000	--	20.0000000	%
SODIUM HYPOCHLORITE	0.0000000	--	2.0000000	%
VINYL CHLORIDE		--		Trace
WATER	80.0000000	--	98.0000000	%

DOES THIS WASTE CONTAIN ANY HEAVY GAUGE METAL DEBRIS OR OTHER LARGE OBJECTS (EX., METAL PLATE OR PIPING >1/4" THICK OR >12" LONG, METAL REINFORCED HOSE >12" LONG, METAL WIRE >12" LONG, METAL VALVES, PIPE FITTINGS, CONCRETE REINFORCING BAR OR PIECES OF CONCRETE >3")? YES NO

If yes, describe, including dimensions:

DOES THIS WASTE CONTAIN ANY METALS IN POWDERED OR OTHER FINELY DIVIDED FORM? YES [x] NO

DOES THIS WASTE CONTAIN OR HAS IT CONTACTED ANY OF THE FOLLOWING; ANIMAL WASTES, HUMAN BLOOD, BLOOD PRODUCTS, BODY FLUIDS, MICROBIOLOGICAL WASTE, PATHOLOGICAL WASTE, HUMAN OR ANIMAL DERIVED SERUMS OR PROTEINS OR ANY OTHER POTENTIALLY INFECTIOUS MATERIAL? YES [x] NO

I acknowledge that this waste material is neither infectious nor does it contain any organism known to be a threat to human health. This certification is based on my knowledge of the material. Select the answer below that applies:

The waste was never exposed to potentially infectious material. YES NO

Chemical disinfection or some other form of sterilization has been applied to the waste. YES NO

I ACKNOWLEDGE THAT THIS PROFILE MEETS THE CLEAN HARBORS BATTERY PACKAGING REQUIREMENTS. YES NO

I ACKNOWLEDGE THAT MY FRIABLE ASBESTOS WASTE IS DOUBLE BAGGED AND WETTED. YES NO

SPECIFY THE SOURCE CODE ASSOCIATED WITH THE WASTE. *G25* SPECIFY THE FORM CODE ASSOCIATED WITH THE WASTE. *W119*

Report Printed On : Monday, June 03, 2013 /WINWEB/Profile\Waste Profile.rdl Page 1 of 3

CleanHarbors

Clean Harbors Profile No. CH196896

E. CONSTITUENTS

Are these values based on testing or knowledge? ☑ Knowledge Testing

If based on knowledge, please describe in detail, the rationale applied to identify and characterize the waste material. Please include reference to Material Safety Data Sheets (MSDS) when applicable. Include the chemical or trade-name represented by the MSDS, and or detailed process or operating procedures which generate the waste.

Generator completed profile using analytical and knowledge.

Please indicate which constituents below apply. Concentrations must be entered when applicable to assist in accurate review and expedited approval of your waste profile. Please note that the total regulated metals and other constituents sections require answers.

RCRA	REGULATED METALS	REGULATORY LEVEL (mg/l)	TCLP mg/l	TOTAL	UOM	NOT APPLICABLE
D004	ARSENIC	5.0	5.0000	8.0000000	PPM	
D005	BARIUM	100.0	0.8000	0.8000000	PPM	
D006	CADMIUM	1.0	0.0300	0.0300000	PPM	
D007	CHROMIUM	5.0	0.4000	0.4000000	PPM	
D008	LEAD	5.0	0.7000	0.7000000	PPM	
D009	MERCURY	0.2	0.2600	0.3000000	PPM	
D010	SELENIUM	1.0	0.9000	0.9000000	PPM	
D011	SILVER	5.0	0.3000	0.3000000	PPM	

	VOLATILE COMPOUNDS		
D018	BENZENE	0.5	0.5000
D019	CARBON TETRACHLORIDE	0.5	
D021	CHLOROBENZENE	100.0	
D022	CHLOROFORM	6.0	6.0000
D028	1,2-DICHLOROETHANE	0.5	
D029	1,1-DICHLOROETHYLENE	0.7	
D035	METHYL ETHYL KETONE	200.0	
D039	TETRACHLOROETHYLENE	0.7	
D040	TRICHLOROETHYLENE	0.5	
D043	VINYL CHLORIDE	0.2	0.2000

	SEMI-VOLATILE COMPOUNDS	
D023	o-CRESOL	200.0
D024	m-CRESOL	200.0
D025	p-CRESOL	200.0
D026	CRESOL (TOTAL)	200.0
D027	1,4-DICHLOROBENZENE	7.5
D030	2,4-DINITROTOLUENE	0.13
D032	HEXACHLOROBENZENE	0.13
D033	HEXACHLOROBUTADIENE	0.5
D034	HEXACHLOROETHANE	3.0
D036	NITROBENZENE	2.0
D037	PENTACHLOROPHENOL	100.0
D038	PYRIDINE	5.0
D041	2,4,5-TRICHLOROPHENOL	400.0
D042	2,4,6-TRICHLOROPHENOL	2.0

	PESTICIDES AND HERBICIDES	
D012	ENDRIN	0.02
D013	LINDANE	0.4
D014	METHOXYCHLOR	10.0
D015	TOXAPHENE	0.5
D016	2,4-D	10.0
D017	2,4,5-TP (SILVEX)	1.0
D020	CHLORDANE	0.03
D031	HEPTACHLOR (AND ITS EPOXIDE)	0.008

OTHER CONSTITUENTS	MAX	UOM	NOT APPLICABLE
BROMINE			☑
CHLORINE	1.0000	%	
FLUORINE			☑
IODINE			☑
SULFUR			☑
POTASSIUM			☑
SODIUM			☑
AMMONIA			☑
CYANIDE AMENABLE			☑
CYANIDE REACTIVE			☑
CYANIDE TOTAL			☑
SULFIDE REACTIVE	4.2000	PPM	

HOCs

☑ NONE
< 1000 PPM
>= 1000 PPM

PCBs

☑ NONE
< 50 PPM
>=50 PPM

IF PCBS ARE PRESENT, IS THE WASTE REGULATED BY TSCA 40 CFR 761?

YES ☑ NO

ADDITIONAL HAZARDS

DOES THIS WASTE HAVE ANY UNDISCLOSED HAZARDS OR PRIOR INCIDENTS ASSOCIATED WITH IT, WHICH COULD AFFECT THE WAY IT SHOULD BE HANDLED?

YES ☑ NO (If yes, explain)

CHOOSE ALL THAT APPLY

DEA REGULATED SUBSTANCE	EXPLOSIVE	FUMING	☑ OSHA REGULATED CARCINOGENS
POLYMERIZABLE	RADIOACTIVE	REACTIVE MATERIAL	NONE OF THE ABOVE

CleanHarbors

Clean Harbors Profile No. CH196896

F. REGULATORY STATUS

☑ YES NO USEPA HAZARDOUS WASTE?
D004 D009 D018 D022 D043

YES ☑ NO DO ANY STATE WASTE CODES APPLY?

Texas Waste Code *OUTS119H*

YES ☑ NO DO ANY CANADIAN PROVINCIAL WASTE CODES APPLY?

☑ YES NO IS THIS WASTE PROHIBITED FROM LAND DISPOSAL WITHOUT FURTHER TREATMENT PER 40 CFR PART 268?

LDR CATEGORY: *This is subject to LDR.*
VARIANCE INFO:

YES ☑ NO IS THIS A UNIVERSAL WASTE?

YES NO IS THE GENERATOR OF THE WASTE CLASSIFIED AS CONDITIONALLY EXEMPT SMALL QUANTITY GENERATOR (CESQG)?

YES NO IS THIS MATERIAL GOING TO BE MANAGED AS A RCRA EXEMPT COMMERCIAL PRODUCT, WHICH IS FUEL (40 CFR 261.2 (C)(2)(II))?

YES ☑ NO DOES TREATMENT OF THIS WASTE GENERATE A F006 OR F019 SLUDGE?

YES ☑ NO IS THIS WASTE STREAM SUBJECT TO THE INORGANIC METAL BEARING WASTE PROHIBITION FOUND AT 40 CFR 268.3(C)?

YES ☑ NO DOES THIS WASTE CONTAIN VOC'S IN CONCENTRATIONS >=500 PPM?

YES ☑ NO DOES THE WASTE CONTAIN GREATER THAN 20% OF ORGANIC CONSTITUENTS WITH A VAPOR PRESSURE >= .3KPA (.044 PSIA)?

YES ☑ NO DOES THIS WASTE CONTAIN AN ORGANIC CONSTITUENT WHICH IN ITS PURE FORM HAS A VAPOR PRESSURE > 77 KPA (11.2 PSIA)?

YES ☑ NO IS THIS CERCLA REGULATED (SUPERFUND) WASTE ?

YES ☑ NO IS THE WASTE SUBJECT TO ONE OF THE FOLLOWING NESHAP RULES?

Hazardous Organic NESHAP (HON) rule (subpart G) Pharmaceuticals production (subpart GGG)

☑ YES NO IF THIS IS A US EPA HAZARDOUS WASTE, DOES THIS WASTE STREAM CONTAIN BENZENE?

YES ☑ NO Does the waste stream come from a facility with one of the SIC codes listed under benzene NESHAP or is this waste regulated under the benzene NESHAP rules because the original source of the waste is from a chemical manufacturing, coke by-product recovery, or petroleum refinery process?

YES NO Is the generating source of this waste stream a facility with Total Annual Benzene (TAB) >10 Mg/year?

What is the TAB quantity for your facility? Megagram/year (1 Mg = 2,200 lbs)

The basis for this determination is: Knowledge of the Waste Or Test Data Knowledge Testing

Describe the knowledge :

G. DOT/TDG INFORMATION

DOT/TDG PROPER SHIPPING NAME:

NA3082, HAZARDOUS WASTE, LIQUID, N.O.S., (MERCURY, BENZENE), 9, PG III

H. TRANSPORTATION REQUIREMENTS

ESTIMATED SHIPMENT FREQUENCY ☑ ONE TIME WEEKLY MONTHLY QUARTERLY YEARLY OTHER *Other*

☑ **CONTAINERIZED**

0-25 CONTAINERS/SHIPMENT

STORAGE CAPACITY:
CONTAINER TYPE:
CUBIC YARD BOX PALLET
TOTE TANK ☑ DRUM
OTHER:
DRUM SIZE: *55*

BULK LIQUID

GALLONS/SHIPMENT: *0 Min -0 Max* GAL.

BULK SOLID

SHIPMENT UOM: TON YARD

TONS/YARDS/SHIPMENT: *0 Min - 0 Max*

I. SPECIAL REQUEST

COMMENTS OR REQUESTS:

GENERATOR'S CERTIFICATION

I certify that I am authorized to execute this document as an authorized agent. I hereby certify that all information submitted in this and attached documents is correct to the best of my knowledge. I also certify that any samples submitted are representative of the actual waste. If Clean Harbors discovers a discrepancy during the approval process, Generator grants Clean Harbors the authority to amend the profile, as Clean Harbors deems necessary, to reflect the discrepancy.

AUTHORIZED SIGNATURE	NAME (PRINT)	TITLE	DATE
Doug Mck	Doug McKim	Environmental Engineer	6/3/2013

Report Printed On : Monday, June 03, 2013 /WINWEB/Profile\Waste Profile.rdl Page 3 of 3

CleanHarbors
ENVIRONMENTAL SERVICES®

Land Disposal Restriction
Notification Form

Page : 1 of 2

Printed Date 12-16-13

MANIFEST INFORMATION

Generator : Pine Bluff Arsenal

Address: 10020 Kabrich Circle
Pine Bluff,AR 71602

EPA ID #: AR0213820707

Manifest Tracking Info.

Manifest No. 000584718 FLE
Load No. 13025
Confirmation/
Sales Order No: 718623169

LINE ITEM INFORMATION

Line Item:	Page No:	Profile No:	Treatability Group:	LDR Disposal Category
1.	1	CH195286	NON-WASTEWATER	2 (This is subject to LDR.)

EPA Waste Code	EPA Waste SubCategory
D004	Toxicity Characteristic for Arsenic
D007	Toxicity Characteristic for Chromium
D009	Low Mercury, not RMERC Residues

LINE ITEM INFORMATION

Line Item:	Page No:	Profile No:	Treatability Group:	LDR Disposal Category
2. 9a-2	1	CH196896	NON-WASTEWATER	2 (This is subject to LDR.)

EPA Waste Code	EPA Waste SubCategory
D004	Toxicity Characteristic for Arsenic
D009	Low Mercury, not RMERC Residues
D018D022D043	NONE

LINE ITEM INFORMATION

Line Item:	Page No:	Profile No:	Treatability Group:	LDR Disposal Category
3. 9a-1	1	CH196898	NON-WASTEWATER	2 (This is subject to LDR.)

EPA Waste Code	EPA Waste SubCategory
D004	Toxicity Characteristic for Arsenic
D006	Toxicity characteristic for Cadmium
D008	Toxicity Characteristic for Lead
D018D019D022D028D039D040D043	NONE

CleanHarbors
ENVIRONMENTAL SERVICES®

Land Disposal Restriction
Notification Form

Page : 2 of 2

Printed Date 12-16-13

Certification	Applies to Manifest Line Items
Pursuant to 40 CFR 268.7(a), I hereby notify that this shipment contains waste restricted under 40 CFR Part 268.	1 2 3.

Waste analysis data, where available, is attached.

Signature : Doug McKim Print Name Doug McKim

Title : Environmental Engineer Date : 6/3/2013

(This page intentionally left blank.)

DO NOT BIND HERE

CBARR

ECBC Environmental Monitoring Laboratory Analytical Narrative

Client/Project: USACOE/SPV-EDS	**Date Received:** 5/5/2010
Extraction Analyst: Brandon Dusick	**Date Extracted:** 5/5/2010
Analyst: Brandon Dusick	**Batch No(s):** SPV10050502
Reviewer: John Schwarz	**ECBC Sample No(s):** SPV100034

Sample Summary

One water sample and associated quality control were analyzed on 5/6/2010 following procedures specified in IOP MT-08 Version 6.0 for the following: 1,4-Dithiane, 1,4-Thioxane, HD, and L.

The sample was free of all agents of interest to the Laboratory Limit of Quantitation (LOQ).

Sample & Method Performance

Tune: All tuning criteria were met and the reported samples were analyzed within the twelve-hour tune limit.

Calibration: All continuing calibration criteria were met for the reported samples.

Surrogates/Internal Standards: All surrogate and internal standard criteria were met for the reported sample(s).

LCS/LCSDUP(s): All quality control criteria were met for the reported LCS/LCSD.

Method Blank(s): The method blank was free of all analytes of interest to one half the laboratory LOQ.

MS/MSD(s): All quality control criteria were met for the reported MS/MSD with two exceptions. The recoveries fro 1,4-Thioxane (118% for each) was slightly above the QC limit of 116%. The MS/MSD recoveries for HD were above the QC limits due to artificial inflation caused by an interference peak at the target ion (m/z=109) that was seen in the parent sample. These deviations have no negative impact on the results reported.

CBARR

Analytical Results

PART 1 MBFORM-41 Revision 12 March 2010

PROJECT:	Spring Valley EDS		
Reporting POC:	Ray DiBerardo of ECBC	ECBC: Ray DiBerardo	
Phone/Fax:	W:	F:	r

Client Sample ID HD-L-100505-DL-01

Sample Date 5/5/2010 **Matrix** Water

Date Rec'd 5/5/2010 **Remarks**

Lab ID: SPV100034 **Batch #: SPV10050502** **Method:** MT-8

Analyte		*Result*	*Units*	*LOQ*	*Preparation*	*Analysis*	*Remarks*
1,4-Dithiane	<	100	ug/L	100	5/5/2010	5/6/2010	
1,4-Thioxane	<	100	ug/L	100			
HD	<	10	ug/L	10			
L	<	100	ug/L	100			
(Surrogate) BFB		106	%R				

All results reported to two significant figures. LOQ = Limit of Quantitation. D = Sample was diluted. E = Estimated value; result above upper calibration level. J = Detected above the method detection limit but below the LOQ. Result is an estimated value. Q = Unresolvable anomaly in QC results. B = Analyte detected in Method Blank.

Thursday, May 06, 2010 *Page 1 of 1*

CBARR

Analytical QC Results

PART 2 MBFORM-41 Revision 12 March 2010

PROJECT:	Spring Valley EDS		
Reporting POC:	Ray DiBerardo of ECBC		ECBC: Ray DiBerardo
Phone/Fax:	W:	F:	r

Client Sample ID HDIL-100505-DL-01
Sample Date 5/5/2010 **Matrix** Water
Date Rec'd 5/5/2010 **Remarks**

Lab ID: SPV100034 **Batch #: SPV10050502** **Method:** MT-8

Matrix Spike

Analyte	*Result*	*Units*	*LOQ*	*Preparation*	*Analysis*	*Remarks*
1,4-Dithiane	128	%R		5/5/2010	5/6/2010	
1,4-Thioxane	118	%R				
HD	153	%R				
L	97	%R				
(Surrogate) BFB	109	%R				

Lab ID: SPV100034 **Batch #: SPV10050502** **Method:** MT-8

Matrix Spike Duplicate

Analyte	*Result*	*Units*	*LOQ*	*Preparation*	*Analysis*	*Remarks*
1,4-Dithiane	129	%R		5/5/2010	5/6/2010	
1,4-Thioxane	118	%R				
HD	157	%R				
L	96	%R				
(Surrogate) BFB	110	%R				

Client Sample ID SPV10050501-MB
Sample Date 5/5/2010 **Matrix** Water
Date Rec'd 5/5/2010 **Remarks**

Lab ID: SPV100035 **Batch #: SPV10050502** **Method:** MT-8

Method Blank

Analyte	*Result*	*Units*	*LOQ*	*Preparation*	*Analysis*	*Remarks*
1,4-Dithiane	< 50	ug/L	100	5/5/2010	5/6/2010	
1,4-Thioxane	< 50	ug/L	100			
HD	< 5.0	ug/L	10			
L	< 50	ug/L	100			
(Surrogate) BFB	109	%R				

MS/MSD and LCS/LCSD results are in % recovery. LOQ = Limit of Quantitation. D = Sample was diluted. E = Estimated value; result above upper calibration level. J = Detected above the method detection limit but below the LOQ. Result is an estimated value. Q = Unresolvable anomaly in QC results.

Client Sample ID SPV10050501-LCS
Sample Date 5/5/2010 **Matrix** Water
Date Rec'd 5/5/2010 **Remarks**

Lab ID: **SPV100036** **Batch #:** **SPV10050502** **Method:** MT-8

Lab Control Spike

Analyte	*Result*	*Units*	*LOQ*	*Preparation*	*Analysis*	*Remarks*
1,4-Dithiane	120	%R		5/5/2010	5/6/2010	
1,4-Thioxane	113	%R				
HD	102	%R				
L	84	%R				
(Surrogate) BFB	109	%R				

Client Sample ID SPV10050501-LCSD
Sample Date 5/5/2010 **Matrix** Water
Date Rec'd 5/5/2010 **Remarks**

Lab ID: **SPV100037** **Batch #:** **SPV10050502** **Method:** MT-8

Lab Control Spike Duplicate

Analyte	*Result*	*Units*	*LOQ*	*Preparation*	*Analysis*	*Remarks*
1,4-Dithiane	120	%R		5/5/2010	5/6/2010	
1,4-Thioxane	114	%R				
HD	102	%R				
L	81	%R				
(Surrogate) BFB	110	%R				

MS/MSD and LCS/LCSD results are in % recovery. LOQ = Limit of Quantitation. D = Sample was diluted. E = Estimated value; result above upper calibration level. J = Detected above the method detection limit but below the LOQ. Result is an estimated value. Q = Unresolvable anomaly in QC results.

05/12/2010 07:43 4107790235 CENAB-PP-E PAGE 02/08

USEcology

☐ US Ecology Nevada (Beatty) Fax (775) 553-2125
☐ US Ecology Idaho (Grand View) Fax (208) 834-2919
☑ US Ecology Texas (Robstown) Fax (361) 387-0794

Profile #: SVP #1

A. CUSTOMER INFORMATION *Waste as shipped will be: ☐ Industrial ☐ NON - Industrial *(Texas customers only)

Generator: USACE Spring Valley FUDS
Facility Address: 5201 Little Falls Road (No PO Box)
Mailing Address
City/State/Zip: Washington DC 20016
Technical Contact: Greg Norden
Phone: 419-425-6067 Fax: 419-425-6085
NAICS# ☐ CESQG ☐ SQG ☑ LQG EPA ID#: DCR000500678 State ID#

☐ Check if Billing is Same
Billing Company: Shaw E&I
Billing Address: 100 Technology Center Drive
City/State/Zip: Stoughton, MA 02072
Billing Contact: Kathy Creighton
Phone No.: 617-589-7475 Fax No.:
Email: kathy.creighton@shawgrp.com

B. SHIPPING INFORMATION

1. US DOT Shipping Name: Oxidizing Liquid, nos (sodium permanganate)
2. Hazard Class: 5.1
3. UN/NA #: 3099
4. Packaging Group: III
5. RQ: 100 pounds
6. Container Type: ☐ Bulk ☐ Totes ☐ Pallet ☐ Boxes ☐ Bags ☑ Drums ☐ Other Size Quantity: 1
7. Frequency: ☐ Year ☐ QTR ☐ Month ☑ 1 Time ☐ Other

C. GENERAL MATERIAL & REGULATORY INFORMATION

1. Common name for this waste: Sodium Permanganate Neutralent and Rinsate
2. Process generating the material: Deactivating lewisite containing round
3. Describe physical appearance of waste: dark purple liquid
4. Describe odor of waste: ☑ None ☐ Slight ☐ Strong Describe
5. Knowledge is from: ☑ Lab Analysis ☐ MSDS ☑ Process/Generator knowledge

☑ Yes ☐ No Is the waste restricted under EPA Land Disposal Restrictions (40 CFR 268) *If yes, please complete LDR form*
☑ Yes ☐ No Is the material <500 PPMW VOC as generated?
☐ Yes ☑ No Is the waste, or generating facility, subject to regulation under 40 CFR Part 61 Subpart FF (Benzene Rule) of NESHAPS? If yes, complete form "*attachment 4*". (Note: Waste generated from chemical manufacturing, coke-by-product recovery plants, petroleum refineries or treaters of such waste are subject to these requirements.)
☑ Yes ☐ No State waste codes
☐ Wastewater ☑ Non-wastewater ☐ Debris
☐ Yes ☐ No Alternative standards for Soil ?
☐ Yes ☑ No CERCLA Regulated (Superfund) Waste
☑ Yes ☐ No EPA Haz. Waste (list codes): D001
☐ Yes ☑ No Contains UHCs/Constituents of Concern: List in section D
☐ Yes ☑ No Has the waste been treated after the initial point of generation?
☐ Yes ☑ No Subpart XX (40 CFR 63.1080) *Controls Required?*
☐ Yes ☑ No Exempt Waste: If yes, list ref. 40 CFR
Source Code G Form Code W Mgt. Method #

D. MATERIAL COMPOSITION (Percent Chemical)

(Range Total > or = 100%) Values are ☐ TCLP ☐ TOTALS
(Include additional sheets as necessary)

	typical value	unit	range
Sodium Permaganate	0.001	4	%
Water	95	97	%
Residual TSS, soils, rust	0.001	2	%

☑ Yes ☐ No Oxidizer
☐ Yes ☑ No Explosive
☐ Yes ☑ No Organic Peroxide
☐ Yes ☑ No Shock Sensitive
☐ Yes ☑ No Tires
☐ Yes ☑ No Pyrophoric
☐ Yes ☑ No Radioactive**
☐ Yes ☑ No Exempt RAD**
☐ Yes ☑ No Halogenated Organic Compounds? (per 40 CFR 268, Appendix III)
☐ Yes ☑ No React. Sulfides ppm
☐ Yes ☑ No React. Cyanides ppm
☐ Yes ☑ No Water/Air (Pyrophoric) React.
☐ Yes ☑ No Thermally Unstable
☐ Yes ☑ No TSCA Regulated PCB Waste
☐ Yes ☑ No Regulated Medical/Infectious Waste
☐ Yes ☑ No Compressed Gasses
**Additional Radiological info is provided in USEI's WAC Addendum

E. PHYSICAL CHARACTERISTICS

1. Flash Pot 200 °F (if <140°F) 2. Typical pH: 11 pH Range 10 to 12
pH Range: ☐ ≤2 ☑ >2, <12.5 ☐ ≥12.5
☐ Yes ☑ No Possibility of incidental liquids from transportation?
☐ Yes ☑ No Does waste pass the EPA specified paint filter test? (Pass is a solid)

G. GENERATOR'S CERTIFICATION ☐ Yes ☑ No I certify this material may be disposed of without further treatment.

Certification Statement: I certify under penalty of law that I am familiar with this waste stream through analysis and/or process knowledge, and that all information provided is true, accurate, representative and complete, and that all known or suspected hazards have been disclosed. Furthermore, I certify that this form was completed in accordance with the instructions provided.

Signature: Scott Chang Print Name: SCOTT CHANG
Title: Chemist Date: 12 May 2010

Facility Use Only
First review: Second review: Final review:
Date approved: Date Dispatch:

Generator: USACE Spring Valley FUDS

Facility Address: 5201 Little Falls Road (No PO Box)

Mailing Address:

City/State/Zip: Washington DC 20016

Technical Contact: Greg Norden

Phone: 419-425-6067 Fax: 419-425-6085

NAICS#: ☐ CESQG ☐ SQG ☑ LQG EPA ID#: DCR000500678 State ID#:

☐ Check if Billing is Same

Billing Company: Shaw E&I

Billing Address: 100 Technology Center Drive

City/State/Zip: Stoughton, MA 02072

Billing Contact: Kathy Creighton

Phone No.: 617-589-7473 Fax No.:

Email: kathy.creighton@shawgrp.com

B. SHIPPING INFORMATION

1. US DOT Shipping Name: Oxidizing liquid, toxic, nos (arsenic) (sodium permanganate) 2. Hazard Class: 5.1
3. UN/NA #: 3099 4. Packaging Group: III 5. RQ: 1 pound
6. Container Type: ☐ Bulk ☐ Totes ☐ Pallet Size: 7. Frequency: ☐ Year ☐ QTR ☐ Month
☐ Boxes ☐ Bags ☑ Drums ☐ Other Quantity: 1 ☑ 1 Time ☐ Other

C. GENERAL MATERIAL & REGULATORY INFORMATION

1. Common name for this waste: Sodium Permanganate Neutralent and Rinsate
2. Process generating the material: Deactivating arsine containing round
3. Describe physical appearance of waste: dark purple liquid
4. Describe odor of waste: ☑ None ☐ Slight ☐ Strong Describe
5. Knowledge is from: ☑ Lab Analysis ☐ MSDS ☑ Process/Generator knowledge ☑ Yes ☐ No Is the waste restricted under EPA Land Disposal Restrictions (40 CFR 268) *If yes, please complete LDR form*

☑ Yes ☐ No Is the material <500 PPMW VOC as generated?

☐ Yes ☑ No Is the waste, or generating facility, subject to regulation under 40 CFR Part 61 Subpart FF (Benzene Rule) of NESHAPS? If yes, complete form "*attachment 4*". (Note: Waste generated from chemical manufacturing, coke-by-product recovery plants, petroleum refineries or treaters of such waste are subject to these requirements.)

☑ Yes ☐ No State waste codes

☐ Wastewater ☑ Non-wastewater ☐ Debris

☐ Yes ☑ No CERCLA Regulated (Superfund) Waste

☐ Yes ☐ No Alternative standards for Soil ?

☑ Yes ☐ No EPA Haz. Waste (list codes)

D001						
D004						

☐ Yes ☑ No Contains UHCs/Constituents of Concern: List in section D

☐ Yes ☑ No Has the waste been treated after the initial point of generation?

☐ Yes ☑ No Subpart XX (40 CFR 63.1080) *Controls Required?*

☐ Yes ☑ No Exempt Waste: If yes, list ref. 40 CFR

Source Code G: Form Code W: Mgt. Method H:

D. MATERIAL COMPOSITION (provide chemical name)

(Range Total ~ or = 100%) Values are ☐ TCLP ☐ TOTALS

(Include additional sheets as necessary)

	typical value	unit	range
Sodium Permanganate	0.001	4	%
Water	95	97	%
Residual TSS, sediment	0.001	2	%
Arsenic	0	200	ppm

E. Does the waste exhibit or contain the following:

☑ Yes ☐ No Oxidizer

☐ Yes ☑ No Explosive

☐ Yes ☑ No Organic Peroxide

☐ Yes ☑ No Shock Sensitive

☐ Yes ☑ No Tires

☐ Yes ☑ No Pyrophoric

☐ Yes ☑ No Radioactive**

☐ Yes ☑ No Exempt RAD**

☐ Yes ☑ No React. Sulfides ____ ppm

☐ Yes ☑ No React. Cyanides ____ ppm

☐ Yes ☑ No Water/Air (Pyrophoric) React.

☐ Yes ☑ No Thermally Unstable

☐ Yes ☑ No TSCA Regulated PCB Waste

☐ Yes ☑ No Regulated Medical/Infectious Waste

☐ Yes ☑ No Compressed Gasses

☐ Yes ☑ No Halogenated Organic Compounds? (per 40 CFR 268, Appendix III)

**Additional Radiological info is provided in USEPA WAC Addendum

F. PHYSICAL CHARACTERISTICS

1. Flash Pt: 200 °F (if <140°F) 2. Typical pH: 11 pH Range: 10 to 12

☐ Yes ☑ No Possibility of incidental liquids from transportation?

☐ Yes ☑ No Does waste pass the EPA specified paint filter test? (Pass is a solid)

pH Range: ☐ ≤2 ☑ >2, <12.5 ☐ ≥12.5

G. GENERATOR'S CERTIFICATION: ☐ Yes ☑ No I certify this material may be disposed of without further treatment.

Certification Statement: I certify under penalty of law that I am familiar with this waste stream through analysis and/or process knowledge, and that all information provided is true, accurate, representative and complete, and that all known or suspected hazards have been disclosed. Furthermore, I certify that this form was completed in accordance with the instructions provided.

Signature: Scott Chang Print Name: SCOTT CHANG

Title: Chemist Date: 12 MAY 2010

FACILITY USE ONLY
Initial review: Supplied review: Email review:
Date Approved: Date Disposed:

05/12/2010 07:43 4107790235 CENAB-PP-E PAGE 03/08

USEcology

☐ US Ecology Nevada (Beatty) Fax (775) 553-2125
☐ US Ecology Idaho (Grand View) Fax (208) 834-2919
☐ US Ecology Texas (Robstown) Fax (361) 387-0794

Profile #: SVP#2

A. CUSTOMER INFORMATION *Waste as shipped will be : ☐ Industrial ☐ NON - Industrial *(Texas customers only)

05/12/2010 07:43 4107790235 CENAB-PP-E PAGE 04/08

USEcology

☐ US Ecology Nevada (Beatty) Fax (775) 553-2125
☐ US Ecology Idaho (Grand View) Fax (208) 834-2919
☐ US Ecology Texas (Robstown) Fax (361) 387-0794

Profile #: SVP #3

A. CUSTOMER INFORMATION

*Waste as shipped will be: ☐ Industrial ☐ NON - Industrial *(Texas customers only)*

Generator: USACE Spring Valley FUDS
Facility Address: 5201 Little Falls Road (No PO Box)
Mailing Address
City/State/Zip: Washington DC 20016
Technical Contact: Greg Norden
Phone: 419-425-6067 Fax: 419-425-6085
NAICS#
☐ CESQG ☐ SQG ☑ LQG EPA ID# DCR000500678 State ID#

☐ Check if Billing is Same
Billing Company: Shaw E&I
Billing Address: 100 Technology Center Drive
City/State/Zip: Stoughton, MA 02072
Billing Contact: Kathy Creighton
Phone No.: 617-589-7475 Fax No.:
Email: kathy.creighton@shawgrp.com

B. SHIPPING INFORMATION

1. US DOT Shipping Name: Hazardous Waste Liquid nos (arsenic)(selenium)
2. UN/NA #: 3082 4. Packaging Group: III 5. RQ: 1 pound 3. Hazard Class: 9
6. Container Type: ☐ Bulk ☐ Totes ☐ Pallet ☐ Boxes ☐ Bags ☑ Drums ☐ Other Size Quantity: 1
7. Frequency: ☐ Year ☐ QTR ☐ Month ☑ 1 Time ☐ Other

C. GENERAL MATERIAL & REGULATORY INFORMATION

1. Common name for this waste: MEA Neutralent and Rinsates
2. Process generating the material: Deactivating mustard and chloroacetone containing round
3. Describe physical appearance of waste: cloudy brown liquid
4. Describe odor of waste: ☐ None ☑ Slight ☐ Strong Describe: ammonia like
5. Knowledge is from: ☑ Lab Analysis ☐ MSDS ☑ Process/Generator knowledge

☑ Yes ☐ No Is the waste restricted under EPA Land Disposal Restrictions (40 CFR 268) *If yes, please complete LDR form*
☑ Yes ☐ No Is the material <500 PPMW VOC as generated?
☐ Yes ☑ No Is the waste, or generating facility, subject to regulation under 40 CFR Part 61 Subpart FF (Benzene Rule) of NESHAPS? If yes, complete form "*attachment 4*". (Note: Waste generated from chemical manufacturing, coke-by-product recovery plants, petroleum refineries or treaters of such waste are subject to these requirements.)
☑ Yes ☐ No State waste codes
☐ Wastewater ☑ Non-wastewater ☐ Debris
☐ Yes ☑ No CERCLA Regulated (Superfund) Waste
☐ Yes ☐ No Alternative standards for Soil ?
☑ Yes ☐ No EPA Haz. Waste (list codes): D004, D010
☐ Yes ☑ No Contains UHCs/Constituents of Concern: List in section D
☐ Yes ☑ No Has the waste been treated after the initial point of generation?
☐ Yes ☑ No Subpart XX (40 CFR 63.1080) *Controls Required?*
☐ Yes ☑ No Exempt Waste: If yes, list ref. 40 CFR
Source Code G Form Code W Mgt. Method H

D. MATERIAL COMPOSITION (Physical Chemical)

(Range Total > or = 100%) Values are ☐ TCLP ☐ TOTALS
(Include additional sheets as necessary)

	typical value	unit	range
MEA	0.001	4	%
Water	95	97	%
Residual TSS, soils, rust	0.001	2	%
Arsenic	0	100	ppm
Selenium	0	20	ppm

E. Does the waste exhibit or contain the following:

☐ Yes ☑ No Oxidizer
☐ Yes ☑ No Explosive
☐ Yes ☑ No Organic Peroxide
☐ Yes ☑ No Shock Sensitive
☐ Yes ☑ No Tires
☐ Yes ☑ No Pyrophoric
☐ Yes ☑ No Radioactive**
☐ Yes ☑ No Exempt RAD**
☐ Yes ☑ No React. Sulfides ppm
☐ Yes ☑ No React. Cyanides ppm
☐ Yes ☑ No Water/Air (Pyrophoric) React.
☐ Yes ☑ No Thermally Unstable
☐ Yes ☑ No TSCA Regulated PCB Waste
☐ Yes ☑ No Regulated Medical/Infectious Waste
☐ Yes ☑ No Compressed Gasses
**Additional Radiological info is provided in USEI's WAC Addendum
☐ Yes ☑ No Halogenated Organic Compounds? (per 40 CFR 268, Appendix III)

F. PHYSICAL CHARACTERISTICS

1. Flash Pt: 200 °F (if <140°F) 2. Typical pH: 11
pH Range: 10 to 12
pH Range: ☐ ≤2 ☑ >2, <12.5 ☐ ≥12.5
☐ Yes ☑ No Possibility of incidental liquids from transportation?
☐ Yes ☑ No Does waste pass the EPA specified paint filter test? *(Pass is a solid)*

G. GENERATOR'S CERTIFICATION

☐ Yes ☑ No I certify this material may be disposed of without further treatment.

Certification Statement: I certify under penalty of law that I am familiar with this waste stream through analysis and/or process knowledge, and that all information provided is true, accurate, representative and complete, and that all known or suspected hazards have been disclosed. Furthermore, I certify that this form was completed in accordance with the instructions provided.

Signature: Scott Chang Print Name: Scott CHANG
Title: Chemist Date: 12 May 2010

Facility Use Only
Date Received: Second Review: Final review:
Date Dispatched: Date Detected:

05/12/2010 07:43 4107790235 CENAB-PP-E PAGE 05/08

USEcology

☐ US Ecology Nevada (Beatty) Fax (775) 553-2125
☐ US Ecology Idaho (Grand View) Fax (208) 834-2919
☐ US Ecology Texas (Robstown) Fax (361) 387-0794

Profile #: SVP #4

A. CUSTOMER INFORMATION

*Waste as shipped will be : ☐ Industrial ☐ NON - Industrial *(Texas customers only)*

Generator: USACE Spring Valley FUDS
Facility Address: 5201 Little Falls Road
(No PO Box)
Mailing Address
City/State/Zip: Washington DC 20016
Technical Contact: Greg Norden
Phone: 419-425-6067 Fax: 419-425-6085
NAICS#
☐ CESQG ☐ SQG ☑ LQG EPA ID# DCR000500678 State ID#

☐ Check if Billing is Same
Billing Company: Shaw E&I
Billing Address: 100 Technology Center Drive
City/State/Zip: Stoughton, MA 02072
Billing Contact: Kathy Creighton
Phone No.: 617-589-7475 Fax No.:
Email: kathy.creighton@shawgrp.com

B. SHIPPING INFORMATION

1. US DOT Shipping Name: Corrosive liquid basic inorganic n.o.s (monoethanolamine)(arsenic)
2. Hazard Class: 8
3. UN/NA #: 3266
4. Packaging Group: III
5. RQ: 1 pound
6. Container Type: ☐ Bulk ☐ Totes ☐ Pallet ☐ Boxes ☐ Bags ☑ Drums ☐ Other
Size
Quantity: 1
7. Frequency: ☐ Year ☐ QTR ☐ Month ☑ 1 Time ☐ Other

C. GENERAL MATERIAL & REGULATORY INFORMATION

1. Common name for this waste: MEA Neutralent
2. Process generating the material: Deactivating chloroacetone containing round
3. Describe physical appearance of waste: cloudy brown liquid
4. Describe odor of waste: ☐ None ☑ Slight ☐ Strong Describe: ammonia like
5. Knowledge is from: ☑ Lab Analysis ☐ MSDS ☑ Process/Generator knowledge

☑ Yes ☐ No Is the material <500 PPMW VOC as generated?
☑ Yes ☐ No Is the waste restricted under EPA Land Disposal Restrictions (40 CFR 268) *If yes, please complete LDR form*
☐ Yes ☑ No Is the waste, or generating facility, subject to regulation under 40 CFR Part 61 Subpart FF (Benzene Rule) of NESHAPS? If yes, complete form "*attachment 4*". (Note: Waste generated from chemical manufacturing, coke-by-product recovery plants, petroleum refineries or treaters of such waste are subject to these requirements.)
☑ Yes ☐ No State waste codes
☐ Yes ☑ No CERCLA Regulated (Superfund) Waste
☑ Yes ☐ No EPA Haz. Waste (list codes)

D004	D002					
D018	D043					
D010						

☐ Wastewater ☑ Non-wastewater ☐ Debris
☐ Yes ☐ No Alternative standards for Soil ?
☐ Yes ☑ No Contains UHCs/Constituents of Concern: List in section D
☐ Yes ☑ No Has the waste been treated after the initial point of generation?
☐ Yes ☑ No Subpart XX (40 CFR 63.1080) *Controls Required?*
☐ Yes ☑ No Exempt Waste: If yes, list ref. 40 CFR
Source Code G Form Code W Mgt. Method H

D. MATERIAL COMPOSITION (Chemical Analysis)

(Range Total > or = 100%) Values are ☐ TCLP ☐ TOTALS
(Include additional sheets as necessary)

	typical value	unit	range
MEA	0.001	4	%
Water	95	97	%
Residual TSS, soils, rust	0.001	2	%
Arsenic	0	100	ppm
Benzene	0	100	ppm
Selenium	0	10	ppm
Vinyl Chloride	0	2	ppm

E. Does the waste exhibit or contain the following:

☐ Yes ☑ No Oxidizer
☐ Yes ☑ No Explosive
☐ Yes ☑ No Organic Peroxide
☐ Yes ☑ No Shock Sensitive
☐ Yes ☑ No Tires
☐ Yes ☑ No Pyrophoric
☐ Yes ☑ No Radioactive**
☐ Yes ☑ No Exempt RAD**
☐ Yes ☑ No React. Sulfides ppm
☐ Yes ☑ No React. Cyanides ppm
☐ Yes ☑ No Water/Air (Pyrophoric) React.
☐ Yes ☑ No Thermally Unstable
☐ Yes ☑ No TSCA Regulated PCB Waste
☐ Yes ☑ No Regulated Medical/Infectious Waste
☐ Yes ☑ No Compressed Gasses
**Additional Radiological info is provided in USEI's WAC Addendum
☐ Yes ☑ No Halogenated Organic Compounds? (per 40 CFR 268, Appendix III)

F. PHYSICAL CHARACTERISTICS

1. Flash Poi 200 °F (if <140°F) 2. Typical pH: 11 pH Range 10 to 12
☐ Yes ☑ No Possibility of incidental liquids from transportation?
☐ Yes ☑ No Does waste pass the EPA specified paint filter test? *(Pass is a solid)*
pH Range: ☐ ≤2 ☑ >2, <12.5 ☐ ≥12.5

G. GENERATOR'S CERTIFICATION

☐ Yes ☑ No **I certify this material may be disposed of without further treatment.**
Certification Statement: I certify under penalty of law that I am familiar with this waste stream through analysis and/or process knowledge, and that all information provided is true, accurate, representative and complete, and that all known or suspected hazards have been disclosed. Furthermore, I certify that this form was completed in accordance with the instructions provided.

Signature: Scott Chang Print Name: Scott CHANG
Title: Chemist Date: 12 May 2010

USEI USE ONLY
First review: Second review: Final review:
Date approved: Date Denied:

05/12/2010 07:43 4107790235 CENAB-PP-E PAGE 06/08

USEcology

☐ US Ecology Nevada (Beatty) Fax (775) 553-2125
☐ US Ecology Idaho (Grand View) Fax (208) 834-2919
☐ US Ecology Texas (Robstown) Fax (361) 387-0794

Profile #: SVP #5

A. CUSTOMER INFORMATION

*Waste as shipped will be: ☐ Industrial ☐ NON - Industrial *(Texas customers only)*

Generator: USACE Spring Valley FUDS
Facility Address: 5201 Little Falls Road
(No PO Box)
Mailing Address:
City/State/Zip: Washington DC 20016
Technical Contact: Greg Norden
Phone: 419-425-6067 Fax: 419-425-6085
NAICS#: ☐ CESQG ☐ SQG ☑ LQG EPA ID# DCR000500678

☐ Check if Billing is Same
Billing Company: Shaw E&I
Billing Address: 100 Technology Center Drive
City/State/Zip: Stoughton, MA 02072
Billing Contact: Kathy Creighton
Phone No.: 617-589-7475 Fax No.:
Email: kathy.creighton@shawgrp.com
State ID#:

B. SHIPPING INFORMATION

1. US DOT Shipping Name: Hazardous Waste Liquid nos (benzene)
2. UN/NA #: 3082
4. Packaging Group: III
5. RQ: 10 pounds
3. Hazard Class: 9
6. Container Type: ☐ Bulk ☐ Totes ☐ Pallet ☐ Boxes ☐ Bags ☑ Drums ☐ Other
Size:
Quantity: 1
7. Frequency: ☐ Year ☐ QTR ☐ Month ☑ 1 Time ☐ Other

C. GENERAL MATERIAL & REGULATORY INFORMATION

1. Common name for this waste: No Key Elements Neutralent
2. Process generating the material: Destroying rounds that were empty or contained water
3. Describe physical appearance of waste: clear to cloudy water like liquid
4. Describe odor of waste: ☑ None ☐ Slight ☐ Strong Describe
5. Knowledge is from: ☑ Lab Analysis ☐ MSDS ☑ Process/Generator knowledge

☑ Yes ☐ No Is the material <500 PPMW VOC as generated?
☑ Yes ☐ No Is the waste restricted under EPA Land Disposal Restrictions (40 CFR 268) *If yes, please complete LDR form*
☐ Yes ☑ No Is the waste, or generating facility, subject to regulation under 40 CFR Part 61 Subpart FF (Benzene Rule) of NESHAPS? If yes, complete form "*attachment 4*". (Note: Waste generated from chemical manufacturing, coke-by-product recovery plants, petroleum refineries or treaters of such waste are subject to these requirements.)
☑ Yes ☐ No State waste codes
☐ Wastewater ☑ Non-wastewater ☐ Debris
☐ Yes ☑ No CERCLA Regulated (Superfund) Waste
☐ Yes ☐ No Alternative standards for Soil ?
☑ Yes ☐ No EPA Haz. Waste (list codes): D018
☐ Yes ☑ No Contains UHCs/Constituents of Concern: List in section D
☐ Yes ☑ No Has the waste been treated after the initial point of generation?
☐ Yes ☑ No Subpart XX (40 CFR 63.1080) *Controls Required?*
☐ Yes ☑ No Exempt Waste: If yes, list ref. 40 CFR
Source Code G Form Code W Mgt. Method H

D. MATERIAL COMPOSITION (Process Knowledge)

(Range Total > or = 100%) Values are ☐ TCLP ☐ TOTALS
(Include additional sheets as necessary)

	typical value	unit	range
Water	95	99	%
Residual TSS, soils, rust	0.001	2	%
Benzene	0		ppm

E. Does the waste exhibit or contain the following:

☐ Yes ☑ No Oxidizer
☐ Yes ☑ No Explosive
☐ Yes ☑ No Organic Peroxide
☐ Yes ☑ No Shock Sensitive
☐ Yes ☑ No Tires
☐ Yes ☑ No Pyrophoric
☐ Yes ☑ No Radioactive**
☐ Yes ☑ No Exempt RAD**
☐ Yes ☑ No Halogenated Organic Compounds? (per 40 CFR 268, Appendix III)
☐ Yes ☑ No React. Sulfides ____ ppm
☐ Yes ☑ No React. Cyanides ____ ppm
☐ Yes ☑ No Water/Air (Pyrophoric) React.
☐ Yes ☑ No Thermally Unstable
☐ Yes ☑ No TSCA Regulated PCB Waste
☐ Yes ☑ No Regulated Medical/Infectious Waste
☐ Yes ☑ No Compressed Gasses

**Additional Radiological info is provided in USE's WAC Addendum

F. PHYSICAL CHARACTERISTICS

1. Flash Pot 200 °F (if <140°F) 2. Typical pH: 7 pH Range 6 to 8
☐ Yes ☑ No Possibility of incidental liquids from transportation?
☐ Yes ☑ No Does waste pass the EPA specified paint filter test? (Pass is a solid)
pH Range: ☐ ≤2 ☑ >2, <12.5 ☐ ≥12.5

G. GENERATOR'S CERTIFICATION

☐ Yes ☑ No I certify this material may be disposed of without further treatment.

Certification Statement: I certify under penalty of law that I am familiar with this waste stream through analysis and/or process knowledge, and that all information provided is true, accurate, representative and complete, and that all known or suspected hazards have been disclosed. Furthermore, I certify that this form was completed in accordance with the instructions provided.

Signature: Scott Chang Print Name: SCOTT CHANG
Title: Chemist Date: 12 May 2010

Second Signature
Date Received:
Date Deposited:

05/12/2010 07:43 4107790235 CENAB-PP-E PAGE 07/08

USEcology

☐ US Ecology Nevada (Beatty) Fax (775) 553-2125
☐ US Ecology Idaho (Grand View) Fax (208) 834-2919
☐ US Ecology Texas (Robstown) Fax (361) 387-0794

Profile #: SVP # 6

A. CUSTOMER INFORMATION *Waste as shipped will be: ☐ Industrial ☐ NON - Industrial *(Texas customers only)

Generator: USACE Spring Valley FUDS
Facility Address: 5201 Little Falls Road
(No PO Box)
Mailing Address
City/State/Zip: Washington DC 20016
Technical Contact: Greg Norden
Phone: 419-425-6067 Fax: 419-425-6085
NAICS# ☐ CESQG ☐ SQG ☑ LQG EPA ID# DCR000500678 State ID#

☐ Check If Billing Is Same
Billing Company: Shaw E&I
Billing Address: 100 Technology Center Drive
City/State/Zip: Stoughton, MA 02072
Billing Contact: Kathy Creighton
Phone No.: 617-589-7475 Fax No.:
Email: kathy.creighton@shawgrp.com

B. SHIPPING INFORMATION

1. US DOT Shipping Name: Non Hazardous Liquid Waste
3. UN/NA #: NA 4. Packaging Group: NA 5. RQ: NA 2. Hazard Class: NA
6. Container Type: ☐ Bulk ☐ Totes ☐ Pallet ☐ Boxes ☐ Bags ☑ Drums ☐ Other Size Quantity: 1
7. Frequency: ☐ Year ☐ QTR ☐ Month ☑ 1 Time ☐ Other

C. GENERAL MATERIAL & REGULATORY INFORMATION

1. Common name for this waste: No Key Elements Rinsate
2. Process generating the material: Destroying rounds that were empty or contained water
3. Describe physical appearance of waste: clear to cloudy water like liquid
4. Describe odor of waste: ☑ None ☐ Slight ☐ Strong Describe
5. Knowledge is from: ☑ Lab Analysis ☐ MSDS ☑ Process/Generator knowledge

☑ Yes ☐ No Is the material <500 PPMW VOC as generated? ☑ Yes ☐ No Is the waste restricted under EPA Land Disposal Restrictions (40 CFR 268) *If yes, please complete LDR form*

☐ Yes ☑ No Is the waste, or generating facility, subject to regulation under 40 CFR Part 61 Subpart FF (Benzene Rule) of NESHAPS? If yes, complete form "*attachment 4*". (Note: Waste generated from chemical manufacturing, coke-by-product recovery plants, petroleum refineries or treaters of such waste are subject to these requirements.)

☑ Yes ☐ No State waste codes ☐ Wastewater ☑ Non-wastewater ☐ Debris

☐ Yes ☑ No CERCLA Regulated (Superfund) Waste ☐ Yes ☐ No Alternative standards for Soil?

☐ Yes ☑ No EPA Haz. Waste (list codes) ☐ Yes ☑ No Contains UHCs/Constituents of Concern: List in section D
☐ Yes ☑ No Has the waste been treated after the initial point of generation?
☐ Yes ☑ No Subpart XX (40 CFR 63.1080) *Controls Required?*
☐ Yes ☑ No Exempt Waste: If yes, list ref. 40 CFR
Source Code G Form Code W Mgt. Method H

D. MATERIAL COMPOSITION (Chemical Analysis)

(Range Total > or = 100%) Values are ☐ TCLP ☐ TOTALS
(Include additional sheets as necessary)

	typical value	unit	range
Water	95	99	%
Residual TSS, soils, rust	0.001	2	%

E. Does the waste exhibit or contain the following:

☐ Yes ☑ No Oxidizer
☐ Yes ☑ No Explosive
☐ Yes ☑ No Organic Peroxide
☐ Yes ☑ No Shock Sensitive
☐ Yes ☑ No Tires
☐ Yes ☑ No Pyrophoric
☐ Yes ☑ No Radioactive**
☐ Yes ☑ No Exempt RAD**
☐ Yes ☑ No Halogenated Organic Compounds? (per 40 CFR 268, Appendix III)

☐ Yes ☑ No React. Sulfides ____ ppm
☐ Yes ☑ No React. Cyanides ____ ppm
☐ Yes ☑ No Water/Air (Pyrophoric) React.
☐ Yes ☑ No Thermally Unstable
☐ Yes ☑ No TSCA Regulated PCB Waste
☐ Yes ☑ No Regulated Medical/Infectious Waste
☐ Yes ☑ No Compressed Gasses

**Additional Radiological info is provided in USEI's WAC Addendum

F. PHYSICAL CHARACTERISTICS

1. Flash Poi 200 °F (if <140°F) 2. Typical pH: 7 pH Range: 6 to 8
pH Range: ☐ ≤2 ☑ >2, <12.5 ☐ ≥ 12.5
☐ Yes ☑ No Possibility of incidental liquids from transportation?
☐ Yes ☑ No Does waste pass the EPA specified paint filter test? (Pass is a solid)

G. GENERATOR CERTIFICATION ☐ Yes ☑ No I certify this material may be disposed of without further treatment.

Certification Statement: I certify under penalty of law that I am familiar with this waste stream through analysis and/or process knowledge, and that all information provided is true, accurate, representative and complete, and that all known or suspected hazards have been disclosed. Furthermore, I certify that this form was completed in accordance with the instructions provided.

Signature: Scott Chang Print Name: Scott CHANG
Title: Chemist Date: 12 May 2010

Facility use only
Filed by:
Date received: Source of waste: Final review:
Date Dispatched:

USEcology

☐ US Ecology Nevada (Beatty) Fax (775) 553-2125
☐ US Ecology Idaho (Grand View) Fax (208) 834-2919
☐ US Ecology Texas (Robstown) Fax (361) 387-0794

Profile #: SVP #7

A. CUSTOMER INFORMATION *Waste as shipped will be: ☐ Industrial ☐ NON - Industrial *(Texas customers only)*

Generator: USACE Spring Valley FUDS
Facility Address: 5201 Little Falls Road (No PO Box)
Mailing Address
City/State/Zip: Washington DC 20016
Technical Contact: Greg Norden
Phone: 419-425-6067 Fax: 419-425-6085
NAICS# ☐ CESQG ☐ SQG ☑ LQG EPA ID# DCR000500678 State ID#

☐ Check if Billing is Same
Billing Company: Shaw E&I
Billing Address: 100 Technology Center Drive
City/State/Zip: Stoughton, MA 02072
Billing Contact: Kathy Creighton
Phone No.: 617-589-7475 Fax No.:
Email: kathy.creighton@shawgrp.com

B. SHIPPING INFORMATION

1. US DOT Shipping Name: Hazardous Waste Solid nos (arsenic)
2. Hazard Class: 9
3. UN/NA #: 3077
4. Packaging Group: III
5. RQ: 1 pound
6. Container Type: ☑ Bulk ☐ Totes ☐ Pallet ☐ Boxes ☐ Bags ☑ Drums ☐ Other Size Quantity: 2
7. Frequency: ☐ Year ☐ QTR ☐ Month ☑ 1 Time ☐ Other

C. GENERAL MATERIAL & REGULATORY INFORMATION

1. Common name for this waste: EDS Solids
2. Process generating the material: Spent filters and equipment from EDS operation
3. Describe physical appearance of waste: Various
4. Describe odor of waste: ☑ None ☐ Slight ☐ Strong Describe
5. Knowledge is from: ☐ Lab Analysis ☐ MSDS ☑ Process/Generator knowledge

☑ Yes ☐ No Is the material <500 PPMW VOC as generated?
☑ Yes ☐ No Is the waste restricted under EPA Land Disposal Restrictions (40 CFR 268) *If yes, please complete LDR form*
☐ Yes ☑ No Is the waste, or generating facility, subject to regulation under 40 CFR Part 61 Subpart FF (Benzene Rule) of NESHAPS? If yes, complete form "*attachment 4*". (Note: Waste generated from chemical manufacturing, coke-by-product recovery plants, petroleum refineries or treaters of such waste are subject to these requirements.)
☑ Yes ☐ No State waste codes
☐ Yes ☑ No CERCLA Regulated (Superfund) Waste
☑ Yes ☐ No EPA Haz. Waste (list codes): D004
☐ Wastewater ☑ Non-wastewater ☐ Debris
☐ Yes ☐ No Alternative standards for Soil ?
☐ Yes ☑ No Contains UHCs/Constituents of Concern: List in section D
☐ Yes ☑ No Has the waste been treated after the initial point of generation?
☐ Yes ☑ No Subpart XX (40 CFR 63.1080) *Controls Required?*
☐ Yes ☑ No Exempt Waste: If yes, list ref. 40 CFR
Source Code G Form Code W Mgt. Method H

D. MATERIAL COMPOSITION (Physical Chemical)

(Range Total > or = 100%) Values are ☐ TCLP ☐ TOTALS
(include additional sheets as necessary)

	typical value	unit	range
Filters	60	80	%
PPE & expendibles	10	20	%
Empty Containers	5	7	%
Arsenic	0	100	ppm

E. Does the waste exhibit or contain the following:

☐ Yes ☑ No Oxidizer
☐ Yes ☑ No Explosive
☐ Yes ☑ No Organic Peroxide
☐ Yes ☑ No Shock Sensitive
☐ Yes ☑ No Tires
☐ Yes ☑ No Pyrophoric
☐ Yes ☑ No Radioactive**
☐ Yes ☑ No Exempt RAD**
☐ Yes ☑ No Halogenated Organic Compounds? (per 40 CFR 268, Appendix III)
☐ Yes ☑ No React. Sulfides ppm
☐ Yes ☑ No React. Cyanides ppm
☐ Yes ☑ No Water/Air (Pyrophoric) React.
☐ Yes ☑ No Thermally Unstable
☐ Yes ☑ No TSCA Regulated PCB Waste
☐ Yes ☑ No Regulated Medical/Infectious Waste
☐ Yes ☑ No Compressed Gasses

**Additional Radiological info is provided in USEI's WAC Addendum

F. PHYSICAL CHARACTERISTICS

1. Flash Poi NA °F (if <140°F) 2. Typical pH: NA pH Range NA to
pH Range: ☐ ≤2 ☐ >2, <12.5 ☐ ≥12.5
☐ Yes ☑ No Possibility of incidental liquids from transportation?
☑ Yes ☐ No Does waste pass the EPA specified paint filter test? *(Pass is a solid)*

G. GENERATORS CERTIFICATION: ☐ Yes ☑ No I certify this material may be disposed of without further treatment.

Certification Statement: I certify under penalty of law that I am familiar with this waste stream through analysis and/or process knowledge, and that all information provided is true, accurate, representative and complete, and that all known or suspected hazards have been disclosed. Furthermore, I certify that this form was completed in accordance with the instructions provided.

Signature: Scott Chang Title: Chemist Print Name: Scott CHANG Date: 12 May 2010

Facility Use Only: Review Initials: Seen Previous Date Approved: Final review Date Denied:

ANALYTICAL LABORATORY SERVICES, INC.
www.analyticallab.com
NELAP Accredited
PA 22-293 NJ PA010
34 Dogwood Lane - Middletown, PA 17057 Phone: 717-944-5541 Fax: 717-944-1430

SAMPLE SUMMARY

Workorder: 9852445 83/84/85-10-223624/25/26 Discard Date: 07/28/2010

Lab ID	Sample ID	Matrix	Date Collected	Date Received	Collected By
9852445001	83-10-223624 CG Neutralent	Water	6/28/10 00:00	6/29/10 20:35	Customer
9852445002	84-10-223625 CG Rinsate	Water	6/28/10 00:00	6/29/10 20:35	Customer
9852445003	85-10-223626 CG SumpRinse	Water	6/28/10 00:00	6/29/10 20:35	Customer

Workorder Comments:

Notes

- Samples collected by ALSI personnel are done so in accordance with the procedures set forth in the ALSI Field Sampling Plan (20 - Field Services Sampling Plan).
- All Waste Water analyses comply with methodology requirements of 40 CFR Part 136.
- All Drinking Water analyses comply with methodology requirements of 40 CFR Part 141.
- Unless otherwise noted, all quantitative results for soils are reported on a dry weight basis.
- The Chain of Custody document is included as part of this report.

Standard Acronyms/Flags

J, B	Indicates an estimated value between the Method Detection Limit (MDL) and the Practical Quantitation Limit (PQL) for the analyte
U	Indicates that the analyte was Not Detected (ND)
MDL	Method Detection Limit
PQL	Practical Quantitation Limit
RDL	Reporting Detection Limit
ND	Not Detected - indicates that the analyte was Not Detected at the RDL
Cntr	Analysis was performed using this container
RegLmt	Regulatory Limit
LCS	Laboratory Control Sample
MS	Matrix Spike
MSD	Matrix Spike Duplicate
DUP	Sample Duplicate
%Rec	Percent Recovery
RPD	Relative Percent Difference

From 15 June 2010
EDS operation J-Field, APG
Two 75 mm projectiles
filled with Phosgene (CG)

ANALYTICAL LABORATORY SERVICES, INC.
www.analyticallab.com
NELAP Accredited
PA 22-293 NJ PA010
34 Dogwood Lane - Middletown, PA 17057 Phone: 717-944-5541 Fax: 717-944-1430

ANALYTICAL RESULTS

D002

Workorder: 9852445 83/84/85-10-223624/25/26

Lab ID: 9852445001 Date Collected: 6/28/2010 00:00 Matrix: Water
Sample ID: 83-10-223624 CG Neutralent Date Received: 6/29/2010 20:35

Parameters	Results	Flag	Units	RDL	Method	Prepared	By	Analyzed	By	Cntr
WET CHEMISTRY										
Flashpoint/Ignitability	See comment	1,2			SW-846 1010			6/30/10 11:40	SDL	A
pH	12.69	3	pH_Units		SM4500B			6/30/10 23:06	SAD	B
TCLP METALS										
Arsenic, Total	1.4		mg/L	0.045	SW846 6010C	7/6/10	KMK	7/6/10 13:55	MWO	A1
Barium, Total	ND		mg/L	0.055	SW846 6010C	7/6/10	KMK	7/6/10 13:55	MWO	A1
Cadmium, Total	0.018		mg/L	0.011	SW846 6010C	7/6/10	KMK	7/6/10 13:55	MWO	A1
Chromium, Total	0.033		mg/L	0.030	SW846 6010C	7/6/10	KMK	7/6/10 13:55	MWO	A1
Lead, Total	0.057		mg/L	0.034	SW846 6010C	7/6/10	KMK	7/6/10 13:55	MWO	A1
Mercury, Total	ND		mg/L	0.010	SW846 7470A	7/6/10	MNP	7/6/10 17:54	MNP	A2
Selenium, Total	0.28		mg/L	0.11	SW846 6010C	7/6/10	KMK	7/6/10 13:55	MWO	A1
Silver, Total	ND		mg/L	0.022	SW846 6010C	7/6/10	KMK	7/6/10 13:55	MWO	A1
TCLP LEACHATE										
Extraction Fluid Used	2				SW846 1311			7/2/10 08:40	EL	A
Final pH	12.75		pH_Units		SW846 1311			7/2/10 08:40	EL	A
Preliminary pH after DI water	12.21		pH_Units		SW846 1311			7/2/10 08:40	EL	A
Preliminary pH after HCl	6.59		pH_Units		SW846 1311			7/2/10 08:40	EL	A

Sample Comments:

Due to spectral interference from Potassium, this sample was diluted 1/5 for the 6010C TCLP metals analysis. The detection limits were raised accordingly. MWO 7-6-10

Anna G Milliken
Laboratory Manager

Report ID: 9852445

Page 3 of 7

ANALYTICAL LABORATORY SERVICES, INC.
www.analyticallab.com
NELAP Accredited
PA 22-293 NJ PA010
34 Dogwood Lane - Middletown, PA 17057 Phone: 717-944-5541 Fax: 717-944-1430

ANALYTICAL RESULTS

Non - Hazardous

Workorder: 9852445 83/84/85-10-223624/25/26

Lab ID: **9852445002** Date Collected: 6/28/2010 00:00 Matrix: Water
Sample ID: **84-10-223625** CG Rinsate Date Received: 6/29/2010 20:35

Parameters	Results	Flag	Units	RDL	Method	Prepared	By	Analyzed	By	Cntr
WET CHEMISTRY										
Flashpoint/Ignitability	See comment	1,4			SW-846 1010			7/7/10 07:15	SDL	A
pH	12.50	3	pH_Units		SM4500B			6/30/10 23:15	SAD	B
TCLP METALS										
Arsenic, Total	0.15		mg/L	0.0090	SW846 6010C	7/1/10	KMK	7/1/10 14:05	MWO	A2
Barium, Total	0.047		mg/L	0.011	SW846 6010C	7/1/10	KMK	7/1/10 14:05	MWO	A2
Cadmium, Total	0.0024		mg/L	0.0022	SW846 6010C	7/1/10	KMK	7/1/10 14:39	MWO	A2
Chromium, Total	0.010		mg/L	0.0060	SW846 6010C	7/1/10	KMK	7/1/10 14:05	MWO	A2
Lead, Total	0.14		mg/L	0.0067	SW846 6010C	7/1/10	KMK	7/1/10 14:05	MWO	A2
Mercury, Total	ND		mg/L	0.010	SW846 7470A	7/2/10	MNP	7/2/10 11:35	MNP	A1
Selenium, Total	ND		mg/L	0.022	SW846 6010C	7/1/10	KMK	7/1/10 14:05	MWO	A2
Silver, Total	ND		mg/L	0.0044	SW846 6010C	7/1/10	KMK	7/1/10 14:05	MWO	A2
TCLP LEACHATE										
Final pH	12.37		pH_Units		SW846 1311			6/30/10 05:40	EL	A

Sample Comments:

The percent dry solid per the EPA leaching procedure was less than 0.5%. The sample was filtered to form the leachate.

Anna G Milliken
Laboratory Manager

Report ID: 9852445

Page 4 of 7

ANALYTICAL LABORATORY SERVICES, INC.
www.analyticallab.com
NELAP Accredited
PA 22-293 NJ PA010
34 Dogwood Lane - Middletown, PA 17057 Phone: 717-944-5541 Fax: 717-944-1430

ANALYTICAL RESULTS

Non-Hazardous

Workorder: 9852445 83/84/85-10-223624/25/26

Lab ID: **9852445003** Date Collected: 6/28/2010 00:00 Matrix: Water

Sample ID: **85-10-223626** CG Sump Rinse Date Received: 6/29/2010 20:35

Parameters	Results	Flag	Units	RDL	Method	Prepared	By	Analyzed	By	Cntr
WET CHEMISTRY										
Flashpoint/Ignitability	See comment	1,4			SW-846 1010			7/7/10 07:15	SDL	A
pH	11.89	3	pH_Units		SM4500B			6/30/10 23:25	SAD	B
TCLP METALS										
Arsenic, Total	0.092		mg/L	0.0090	SW846 6010C	7/1/10	KMK	7/1/10 14:09	MWO	A2
Barium, Total	0.035		mg/L	0.011	SW846 6010C	7/1/10	KMK	7/1/10 14:09	MWO	A2
Cadmium, Total	ND		mg/L	0.0022	SW846 6010C	7/1/10	KMK	7/1/10 14:09	MWO	A2
Chromium, Total	0.012		mg/L	0.0060	SW846 6010C	7/1/10	KMK	7/1/10 14:09	MWO	A2
Lead, Total	0.014		mg/L	0.0067	SW846 6010C	7/1/10	KMK	7/1/10 14:09	MWO	A2
Mercury, Total	ND		mg/L	0.010	SW846 7470A	7/2/10	MNP	7/2/10 11:38	MNP	A1
Selenium, Total	ND		mg/L	0.022	SW846 6010C	7/1/10	KMK	7/1/10 14:09	MWO	A2
Silver, Total	ND		mg/L	0.0044	SW846 6010C	7/1/10	KMK	7/1/10 14:09	MWO	A2
TCLP LEACHATE										
Final pH	11.83		pH_Units		SW846 1311			6/30/10 05:40	EL	A

Sample Comments:

The percent dry solid per the EPA leaching procedure was less than 0.5%. The sample was filtered to form the leachate.

Anna G Milliken
Laboratory Manager

Report ID: 9852445

Page 5 of 7

ANALYTICAL LABORATORY SERVICES, INC.

www.analyticallab.com
NELAP Accredited
PA 22-293 NJ PA010

ACCREDITED IN ACCORDANCE WITH nelac

34 Dogwood Lane - Middletown, PA 17057 Phone: 717-944-5541 Fax: 717-944-1430

Analytical Laboratory Services, Inc.
Environmental • Industrial Hygiene • Field Services
34 Dogwood Lane • Middletown, PA 17057 • 717-944-5541 • Fax: 717-944-1430

CHAIN OF CUSTODY/
REQUEST FOR ANALYSIS
ALL SHADED AREAS MUST BE COMPLETED BY THE CLIENT/SAMPLER. INSTRUCTIONS ON THE BACK.

Page 1 of 1
Course:
Tracking #:

Co. Name: Aberdeen Proving Ground
Contact Person: Mansoor Zakai (410) 436-2157
Address: P.O. Box 105
Gunpowder, Md. 21010

Bill to (if different than Report to): PO#:

Project Name/#: ALSI Quote #:

TAT: [X] Normal-Standard TAT is 10-12 business days. [ ] Rush-Subject to ALSI approval and surcharges. Date Required: Approved By:

Email? Y No. Fax? Y No.

ANALYSES/METHOD REQUESTED

Enter Number of Containers Per Analysis

TCLP Metals, pH, Flashpoint

	Sample Description/Location (Up to 14 Alphanumeric Spaces)	COC Comments	Sample Date	Military Time	°C or °C	Matrix	Container Type	Size	Preservative
1	83-10-223624		9/4/10			GS	1		
2	84-10-223625		9/4/10			GS	1		
3	85-10-223626		9/4/10			GS	1		
4									
5									
6									
7									
8									

SAMPLED BY (Please Print): Duane Vernon

LOGGED BY (Signature): REVIEWED BY (Signature):

Relinquished By / Company Name	Date	Time	Received By / Company Name	Date	Time
1 Client	9/2/10	1500	2 [illegible] AST	9/2/10	1500
3 [illegible]	9/3/10	1644	4 [illegible]	9/3/10	1716
5 [illegible]	9/3/10	9035	6 [illegible]	9/3/10	9035
7			8		
9			10		

Receipt Information: Received in Laboratory? Yes No; Cooler Temp: 2; Therm. ID: 1102; No. of Coolers: Notes:

Custody seals Present? Y N
(If present) Seals Intact? Y N
Received on Ice? Y N
COC/Labels complete/accurate? Y N
Correct preservation? Y N
Headspace/Volatiles? Y N
Correct sample volume? Y N
Correct containers? Y N
Circle appropriate Y or N.
Container in good condition? Y N

ALSI FIELD SERVICES: Pickup, Labor, Composite Sampling, Small Equipment, Other

Data Sample Collected in? NJ NY PA

SDWA Forms No. PA NJ NY PA

Standard, CLP-like, NJ-Reduced, NJ-Full, Other

Data Deliverables

EDD Criteria Required?

Copies: WHITE - ORIGINAL, CANARY - CUSTOMER COPY

Rev 6/07

Report ID: 9852445

Page 7 of 7

ALS Environmental

34 Dogwood Lane ▪ Middletown, PA 17057 ▪ Phone: 717-944-5541 ▪ Fax: 717-944-1430 ▪ www.alsglobal.com

NELAP Certifications: NJ PA010 , NY 11759 , PA 22-293 DoD ELAP: A2LA 0818.01
State Certifications: CT PH-0224 , DE ID 11 , GA 914 , MA PA0102 , MD 128 , LA 04162 , VA 421 , WY EPA Region 8 , WV 343

SAMPLE SUMMARY

Workorder: 9912999 TCLP Metals,VOC,Fp,pH

Discard Date: 08/03/2011

Lab ID	Sample ID	Matrix	Date Collected	Date Received	Collected By
9912999001	44-11-221864 CNS Neutralent	Liquid Waste	6/22/11 08:00	6/28/11 20:40	Customer
9912999002	46-11-221866 CNS Rinsate	Liquid Waste	6/22/11 08:15	6/28/11 20:40	Customer
9912999003	49-11-221867 CNS Rinsate and Sump Rinse	Liquid Waste	6/22/11 08:30	6/28/11 20:40	Customer

Workorder Comments:

This workorder was modified to change the client information for billing purposes. SJS 07/09/11

Notes

- Samples collected by ALS personnel are done so in accordance with the procedures set forth in the ALS Field Sampling Plan (20 - Field Services Sampling Plan).
- All Waste Water analyses comply with methodology requirements of 40 CFR Part 136.
- All Drinking Water analyses comply with methodology requirements of 40 CFR Part 141.
- Unless otherwise noted, all quantitative results for soils are reported on a dry weight basis.
- The Chain of Custody document is included as part of this report.
- All Library Search analytes should be regarded as tentative identifications based on the presumptive evidence of the mass spectra. Concentrations reported are estimated values.

Standard Acronyms/Flags

J, B Indicates an estimated value between the Method Detection Limit (MDL) and the Practical Quantitation Limit (PQL) for the analyte

From CNB and CNS Fills EDS
Test conducted at J. Field APG
May - June 2011
CNS Waste characterization only

ALS Environmental

34 Dogwood Lane ▪ Middletown, PA 17057 ▪ Phone: 717 944-5541 ▪ Fax: 717 944-1430 ▪ www.alsglobal.com

NELAP Certifications: NJ PA010 , NY 11759 , PA 22-293 DoD ELAP: A2LA 0818.01
State Certifications: CT PH-0224 , DE ID 11 , GA 914 , MA PA0102 , MD 128 , LA 04162 , VA 421 , WY EPA Region 8 , WV 343

ANALYTICAL RESULTS

D018, D029, D039, D040, D043
D007, D008, D010

Workorder: 9912999 TCLP Metals,VOC,Fp,pH

Lab ID: 9912999001 Date Collected: 6/22/2011 08:00 Matrix: Liquid Waste
Sample ID: 44-11-221864 CNS Neutralent Date Received: 6/28/2011 20:40

Parameters	Results	Flag	Units	RDL	Method	Prepared	By	Analyzed	By	Cntr
TCLP VOLATILE ORGANICS										
★ Benzene	131000		ug/L	2500	SW846 8260B			7/9/11 04:36	DJB	A
2-Butanone	ND		ug/L	1000	SW846 8260B			7/7/11 19:07	DJB	A
Carbon Tetrachloride	ND		ug/L	100	SW846 8260B			7/7/11 19:07	DJB	A
Chlorobenzene	18900		ug/L	100	SW846 8260B			7/7/11 19:07	DJB	A
Chloroform	ND		ug/L	100	SW846 8260B			7/7/11 19:07	DJB	A
1,2-Dichloroethane	ND		ug/L	100	SW846 8260B			7/7/11 19:07	DJB	A
★ 1,1-Dichloroethene	1330		ug/L	100	SW846 8260B			7/7/11 19:07	DJB	A
★ Tetrachloroethene	56300		ug/L	2500	SW846 8260B			7/9/11 04:36	DJB	A
★ Trichloroethene	10500		ug/L	2500	SW846 8260B			7/9/11 04:36	DJB	A
★ Vinyl Chloride	294		ug/L	100	SW846 8260B			7/7/11 19:07	DJB	A
Surrogate Recoveries	*Results*	*Flag*	*Units*	*Limits*	*Method*	*Prepared*	*By*	*Analyzed*	*By*	*Cntr*
1,2-Dichloroethane-d4 (S)	75.8		%	62-133	SW846 8260B			7/7/11 19:07	DJB	A
4-Bromofluorobenzene (S)	86		%	79-114	SW846 8260B			7/7/11 19:07	DJB	A
Dibromofluoromethane (S)	63.5	4	%	78-116	SW846 8260B			7/7/11 19:07	DJB	A
Toluene-d8 (S)	87.2		%	76-127	SW846 8260B			7/7/11 19:07	DJB	A
1,2-Dichloroethane-d4 (S)	80.8		%	62-133	SW846 8260B			7/9/11 04:36	DJB	A
4-Bromofluorobenzene (S)	95.9		%	79-114	SW846 8260B			7/9/11 04:36	DJB	A
Dibromofluoromethane (S)	85.7		%	78-116	SW846 8260B			7/9/11 04:36	DJB	A
Toluene-d8 (S)	94.9		%	76-127	SW846 8260B			7/9/11 04:36	DJB	A
WET CHEMISTRY										
Flashpoint/Ignitability	Not Ignitable	1,2	Deg. F		SW-846 1010			7/1/11 12:00	AH	A
pH	12.30	3	pH_Units		SM4500B			6/30/11 00:44	SAD	A
TCLP METALS										
Arsenic, Total	1.4		mg/L	0.081	SW846 6010C	6/30/11	KMK	6/30/11 13:03	MWO	A1
Barium, Total	ND		mg/L	0.099	SW846 6010C	6/30/11	KMK	6/30/11 13:03	MWO	A1
Cadmium, Total	0.13		mg/L	0.020	SW846 6010C	6/30/11	KMK	6/30/11 13:03	MWO	A1
★ Chromium, Total	8.7		mg/L	0.050	SW846 6010C	6/30/11	KMK	6/30/11 13:03	MWO	A1
★ Lead, Total	26.3		mg/L	0.060	SW846 6010C	6/30/11	KMK	6/30/11 13:03	MWO	A1
Mercury, Total	ND		mg/L	0.010	SW846 7470A	7/6/11	MNP	7/6/11 14:06	MNP	A2
★ Selenium, Total	1.7		mg/L	0.20	SW846 6010C	6/30/11	KMK	6/30/11 13:03	MWO	A1
Silver, Total	ND		mg/L	0.040	SW846 6010C	6/30/11	KMK	6/30/11 13:03	MWO	A1

ALS Environmental

34 Dogwood Lane • Middletown, PA 17057 • Phone: 717-944-5541 • Fax: 717-944-1430 • www.alsglobal.com

NELAP Certifications: NJ PA010 , NY 11759 , PA 22-293 DoD ELAP: A2LA 0818.01
State Certifications: CT PH-0224 , DE ID 11 , GA 914 , MA PA0102 , MD 128 , LA 04162 , VA 421 , WY EPA Region 8 , WV 343

ANALYTICAL RESULTS

Workorder: 9912999 TCLP Metals,VOC,Fp,pH

Lab ID: **9912999001** Date Collected: 6/22/2011 08:00 Matrix: Liquid Waste
Sample ID: **44-11-221864** Date Received: 6/28/2011 20:40

Parameters	Results	Flag	Units	RDL	Method	Prepared	By	Analyzed	By	Cntr
TCLP LEACHATE										
Final pH	13.00		pH_Units		SW846 1311			6/30/11 11:30	SDL	A

Sample Comments:

The percent dry solid per the EPA leaching procedure was less than 0.5%. The sample was filtered to form the leachate.

The GCMS volatiles analysis was performed at a dilution due to the level of target compounds.

Anna G Milliken
Technical Manager

ALS Environmental

34 Dogwood Lane ▪ Middletown, PA 17057 ▪ Phone: 717-944-5541 ▪ Fax: 717-944-1430 ▪ www.alsglobal.com

NELAP Certifications: NJ PA010 , NY 11759 , PA 22-293 DoD ELAP: A2LA 0818.01
State Certifications: CT PH-0224 , DE ID 11 , GA 914 , MA PA0102 , MD 128 , LA 04162 , VA 421 , WY EPA Region 8 , WV 343

ANALYTICAL RESULTS

D018, D039, D040
D008, D010

Workorder: 9912999 TCLP Metals,VOC,Fp,pH

Lab ID: 9912999002 Date Collected: 6/22/2011 08:15 Matrix: Liquid Waste
Sample ID: 46-11-221866 CNS Rinsate Date Received: 6/28/2011 20:40

Parameters	Results	Flag	Units	RDL	Method	Prepared	By	Analyzed	By	Cntr
TCLP VOLATILE ORGANICS										
Benzene	42700		ug/L	2500	SW846 8260B			7/13/11 00:12	DD	A
2-Butanone	ND		ug/L	1000	SW846 8260B			7/7/11 19:37	DJB	A
Carbon Tetrachloride	ND		ug/L	100	SW846 8260B			7/7/11 19:37	DJB	A
Chlorobenzene	6210		ug/L	100	SW846 8260B			7/7/11 19:37	DJB	A
Chloroform	ND		ug/L	100	SW846 8260B			7/7/11 19:37	DJB	A
1,2-Dichloroethane	ND		ug/L	100	SW846 8260B			7/7/11 19:37	DJB	A
1,1-Dichloroethene	547		ug/L	100	SW846 8260B			7/7/11 19:37	DJB	A
Tetrachloroethene	28200		ug/L	2500	SW846 8260B			7/13/11 00:12	DD	A
Trichloroethene	7120		ug/L	100	SW846 8260B			7/7/11 19:37	DJB	A
Vinyl Chloride	104		ug/L	100	SW846 8260B			7/7/11 19:37	DJB	A
Surrogate Recoveries	*Results*	*Flag*	*Units*	*Limits*	*Method*	*Prepared*	*By*	*Analyzed*	*By*	*Cntr*
1,2-Dichloroethane-d4 (S)	78.6		%	62-133	SW846 8260B			7/7/11 19:37	DJB	A
4-Bromofluorobenzene (S)	87		%	79-114	SW846 8260B			7/7/11 19:37	DJB	A
Dibromofluoromethane (S)	50.2	6	%	78-116	SW846 8260B			7/7/11 19:37	DJB	A
Toluene-d8 (S)	88.9		%	76-127	SW846 8260B			7/7/11 19:37	DJB	A
1,2-Dichloroethane-d4 (S)	81.9		%	62-133	SW846 8260B			7/13/11 00:12	DD	A
4-Bromofluorobenzene (S)	93.3		%	79-114	SW846 8260B			7/13/11 00:12	DD	A
Dibromofluoromethane (S)	83.5		%	78-116	SW846 8260B			7/13/11 00:12	DD	A
Toluene-d8 (S)	86.7		%	76-127	SW846 8260B			7/13/11 00:12	DD	A
WET CHEMISTRY										
Flashpoint/Ignitability	Not Ignitable	1,5	Deg. F		SW-846 1010			7/1/11 12:00	AH	A
pH	10.55	3	pH_Units		SM4500B			6/30/11 00:51	SAD	A
TCLP METALS										
Arsenic, Total	1.7		mg/L	0.081	SW846 6010C	6/30/11	KMK	6/30/11 13:07	MWO	A1
Barium, Total	ND		mg/L	0.099	SW846 6010C	6/30/11	KMK	6/30/11 13:07	MWO	A1
Cadmium, Total	0.20		mg/L	0.020	SW846 6010C	6/30/11	KMK	6/30/11 13:07	MWO	A1
Chromium, Total	2.2		mg/L	0.050	SW846 6010C	6/30/11	KMK	6/30/11 13:07	MWO	A1
Lead, Total	10.2		mg/L	0.060	SW846 6010C	6/30/11	KMK	6/30/11 13:07	MWO	A1
Mercury, Total	ND		mg/L	0.010	SW846 7470A	7/6/11	MNP	7/6/11 14:08	MNP	A2
Selenium, Total	2.2		mg/L	0.20	SW846 6010C	6/30/11	KMK	6/30/11 13:07	MWO	A1
Silver, Total	ND		mg/L	0.040	SW846 6010C	6/30/11	KMK	6/30/11 13:07	MWO	A1

ALS Environmental

34 Dogwood Lane ▪ Middletown, PA 17057 ▪ Phone: 717 944 5541 ▪ Fax: 717 944 1430 ▪ www.alsglobal.com

NELAP Certifications: NJ PA010 , NY 11759 , PA 22-293 DoD ELAP: A2LA 0818.01
State Certifications: CT PH-0224 , DE ID 11 , GA 914 , MA PA0102 , MD 128 , LA 04162 , VA 421 , WY EPA Region 8 , WV 343

ANALYTICAL RESULTS

Workorder: 9912999 TCLP Metals,VOC,Fp,pH

Lab ID: **9912999002** Date Collected: 6/22/2011 08:15 Matrix: Liquid Waste
Sample ID: **46-11-221866** Date Received: 6/28/2011 20:40

Parameters	Results	Flag	Units	RDL	Method	Prepared	By	Analyzed	By	Cntr
TCLP LEACHATE										
Final pH	12.00		pH_Units		SW846 1311			6/30/11 11:30	SDL	A

Sample Comments:

The percent dry solid per the EPA leaching procedure was less than 0.5%. The sample was filtered to form the leachate.

The GCMS volatiles analysis was performed at a dilution due to the level of target compounds.

Anna G Milliken
Technical Manager

ALS Environmental

34 Dogwood Lane ▪ Middletown, PA 17057 ▪ Phone: 717-944-5541 ▪ Fax: 717-944-1430 ▪ www.alsglobal.com

NELAP Certifications: NJ PA010 , NY 11759 , PA 22-293 DoD ELAP: A2LA 0818.01
State Certifications: CT PH-0224 , DE ID 11 , GA 914 , MA PA0102 , MD 128 , LA 04162 , VA 421 , WY EPA Region 8 , WV 343

ANALYTICAL RESULTS

D018

Workorder: 9912999 TCLP Metals,VOC,Fp,pH

Lab ID: 9912999003 Date Collected: 6/22/2011 08:30 Matrix: Liquid Waste

Sample ID: 49-11-221867 CNS Rinsate and Sump Rinse Date Received: 6/28/2011 20:40

Parameters	Results	Flag	Units	RDL	Method	Prepared	By	Analyzed	By	Cntr
TCLP VOLATILE ORGANICS										
Benzene	994		ug/L	100	SW846 8260B			7/8/11 08:35	MES	A
2-Butanone	ND		ug/L	1000	SW846 8260B			7/8/11 08:35	MES	A
Carbon Tetrachloride	ND		ug/L	100	SW846 8260B			7/8/11 08:35	MES	A
Chlorobenzene	113		ug/L	100	SW846 8260B			7/8/11 08:35	MES	A
Chloroform	467		ug/L	100	SW846 8260B			7/8/11 08:35	MES	A
1,2-Dichloroethane	ND		ug/L	100	SW846 8260B			7/8/11 08:35	MES	A
1,1-Dichloroethene	ND		ug/L	100	SW846 8260B			7/8/11 08:35	MES	A
Tetrachloroethene	205		ug/L	100	SW846 8260B			7/8/11 08:35	MES	A
Trichloroethene	ND		ug/L	100	SW846 8260B			7/8/11 08:35	MES	A
Vinyl Chloride	ND		ug/L	100	SW846 8260B			7/8/11 08:35	MES	A
Surrogate Recoveries	*Results*	*Flag*	*Units*	*Limits*	*Method*	*Prepared*	*By*	*Analyzed*	*By*	*Cntr*
1,2-Dichloroethane-d4 (S)	92.9		%	62-133	SW846 8260B			7/8/11 08:35	MES	A
4-Bromofluorobenzene (S)	93		%	79-114	SW846 8260B			7/8/11 08:35	MES	A
Dibromofluoromethane (S)	98.9		%	78-116	SW846 8260B			7/8/11 08:35	MES	A
Toluene-d8 (S)	98		%	76-127	SW846 8260B			7/8/11 08:35	MES	A
WET CHEMISTRY										
Flashpoint/Ignitability	Not Ignitable	1,7	Deg. F		SW-846 1010			7/1/11 12:00	AH	A
pH	12.12	3	pH_Units		SM4500B			6/30/11 00:58	SAD	A
TCLP METALS										
Arsenic, Total	0.10		mg/L	0.081	SW846 6010C	6/30/11	KMK	6/30/11 13:11	MWO	A1
Barium, Total	ND		mg/L	0.099	SW846 6010C	6/30/11	KMK	6/30/11 13:11	MWO	A1
Cadmium, Total	ND		mg/L	0.020	SW846 6010C	6/30/11	KMK	6/30/11 13:11	MWO	A1
Chromium, Total	0.080		mg/L	0.050	SW846 6010C	6/30/11	KMK	6/30/11 13:11	MWO	A1
Lead, Total	0.084		mg/L	0.060	SW846 6010C	6/30/11	KMK	6/30/11 13:11	MWO	A1
Mercury, Total	ND		mg/L	0.010	SW846 7470A	7/6/11	MNP	7/6/11 14:09	MNP	A2
Selenium, Total	ND		mg/L	0.20	SW846 6010C	6/30/11	KMK	6/30/11 13:11	MWO	A1
Silver, Total	ND		mg/L	0.040	SW846 6010C	6/30/11	KMK	6/30/11 13:11	MWO	A1
TCLP LEACHATE										
Final pH	9.00		pH_Units		SW846 1311			6/30/11 11:30	SDL	A

ALS Environmental

34 Dogwood Lane ▪ Middletown, PA 17057 ▪ Phone: 717 944 5541 ▪ Fax: 717 944 1430 ▪ www.alsglobal.com

NELAP Certifications: NJ PA010 , NY 11759 , PA 22-293 DoD ELAP: A2LA 0818.01
State Certifications: CT PH-0224 , DE ID 11 , GA 914 , MA PA0102 , MD 128 , LA 04162 , VA 421 , WY EPA Region 8 , WV 343

ANALYTICAL RESULTS

Workorder: 9912999 TCLP Metals,VOC,Fp,pH

Lab ID:	9912999003	Date Collected:	6/22/2011 08:30	Matrix:	Liquid Waste
Sample ID:	49-11-221867	Date Received:	6/28/2011 20:40		

Parameters	Results	Flag	Units	RDL	Method	Prepared	By	Analyzed	By	Cntr

Sample Comments:

The percent dry solid per the EPA leaching procedure was less than 0.5%. The sample was filtered to form the leachate.

The reporting limits for GCMS volatile analytes were raised due to the dilution of the sample caused by matrix.

Anna G Milliken
Technical Manager

ALS Environmental

34 Dogwood Lane • Middletown, PA 17057 • Phone: 717-944-5541 • Fax: 717 944 1430 • www.alsglobal.com

NELAP Certifications: NJ PA010 , NY 11759 , PA 22-293 DoD ELAP: A2LA 0818.01
State Certifications: CT PH-0224 , DE ID 11 , GA 914 , MA PA0102 , MD 128 , LA 04162 , VA 421 , WY EPA Region 8 , WV 343

ANALYTICAL RESULTS QUALIFIERS\FLAGS

Workorder: 9912999 TCLP Metals,VOC,Fp,pH

PARAMETER QUALIFIERS\FLAGS

[1] According to Pa/USEPA regulations, this sample is not considered to be ignitable. (Ref 40 CFR 261.21)

[2] Sample flashed at 142 degrees F.

[3] Analyte was analyzed past the 24 hour holding time.

[4] The surrogate Dibromofluoromethane for method SW846 8260B was outside of control limits. The % Recovery was reported as 63.5 and the control limits were 78 to 116. This result was reported at a dilution of 100.

[5] Sample flashed at 148 degrees F.

[6] The surrogate Dibromofluoromethane for method SW846 8260B was outside of control limits. The % Recovery was reported as 50.2 and the control limits were 78 to 116. This result was reported at a dilution of 100.

[7] Sample did not flash up to 200 degrees F.

ALS Environmental

34 Dogwood Lane ▪ Middletown, PA 17057 ▪ Phone: 717-944-5541 ▪ Fax: 717-944-1430 ▪ www.alsglobal.com

NELAP Certifications: NJ PA010 , NY 11759 , PA 22-293 DoD ELAP: A2LA 0818.01
State Certifications: CT PH-0224 , DE ID 11 , GA 914 , MA PA0102 , MD 128 , LA 04162 , VA 421 , WY EPA Region 8 , WV 343

Page 1 of 1

CHAIN OF CUSTODY/
REQUEST FOR ANALYSIS

ALL SHADED AREAS MUST BE COMPLETED BY ALS
CLIENT/SAMPLER INSTRUCTIONS ON THE BACK

Analytical Laboratory Services, Inc.

Co. Name: ABERDEEN PROVING GROUNDS
Contact: MANSOOR ZAKAI
Address: P.O. BOX 105
GUN POWDER, MD 21010
Phone: 436-2157
Bill to: Address on Reverse
PO#:
ALSI Quote #:
Project Name#:
Normal-Standard TAT is 10-12 business days.
Rush-Subject to ALSI approval and surcharges.
Date Required:
Approved By:
Email?
Fax?

ANALYSES/METHOD REQUESTED: TCLP METAL, FLASH PT, TCLP Volatiles, PH

Enter Number of Containers Per Analysis

Sample Description/Location (e.g. well, spring, or the WL report)	COC Comments	Sample Date	Sample Time	Matrix	Container Type	Preservative
1 44-11-22186		6/22	0800	L	L	
2 46-11-22186		6/22	0815	L	L	
3 49-11-22186		6/22	0820	L	L	
4						
5						
6						
7						
8						

SAMPLED BY (Please Print): John Ford

LOGGED BY (Signature): SSchuer

REVIEWED BY (Signature): 6/23/11

Relinquished By / Company Name	Date	Time	Received By / Company Name	Date	Time
1 FRED LEONARD	6/23-11	1800	2		
3	6/23-11	1940	4	6-23-11	1940
5 JAN	6-23-11	2000	6	6/23/11	2000
7			8		
9			10		

Data Deliverables: Standard, CLP-like, NJ-Reduced, NJ-Full, Other

EDD Format

DOD Criteria Required?

ALSI FIELD SERVICES: Pickup, Labor, Composite Sampler, Rental Equipment, Other

Sun Lumen Collected by?

Cooler Temp.: 1

Receipt Information

Custody Seals Present?
(If present, Seals Intact?)
Received on Ice?
COC/Labels Complete and Accurate?
Correct Container Used?
Correct Preservation?
Correct Sample Volume?
Correct Containers?
Circle appropriate Y or N.

Cooler Temp. (C): 10/5/5/4/4

No. of Coolers:

Notes:

Matrix: "Water: AHAC: Drinking Water; GW-Groundwater; DW-OIL-Oil; OL-Other Liquid; SL-Sludge; SO-Soil; WW-Wastewater
Container Type: AG-Amber Glass; CG-Clear Glass; PL-Plastic; Container Size: 250mL 500mL 1L 8oz., etc. Preservative: HCL; HNO3; NaOH; etc.

Distribution: WHITE - ORIGINAL; CANARY - CUSTOMER COPY; *G=Grab; C=Composite

Rev 5/07

ALS Environmental Laboratory Locations Across North America

Canada: Burlington · Calgary · Centre of Excellence · Edmonton · Fort McMurray · Fort St. John · Grande Prairie · London · Mississauga · Richmond Hill · Saskatoon · Thunder Bay · Vancouver Waterloo · Winnipeg · Yellowknife **United States:** Cincinnati · Everett · Fort Collins · Holland · Houston · Middletown · Salt Lake City · Spring City · York **Mexico:** Monterrey

Report ID: 9912999

Page 10 of 10

Results of Hazardous Waste Characterization from Drum CSB 100617-Wi-1
CNB Neutralant

Sample Parameter		Concentration	Unit	Limit	Unit
1,1,1,2-Tetrachloroethane	<	150	mg/L		
1,1,1-Trichloroethane	<	150	mg/L		
1,1,2,2-Tetrachloroethane	<	150	mg/L		
1,1,2-Trichloroethane	<	150	mg/L		
1,1-Dichloroethane	<	150	mg/L		
1,1-Dichloroethylene	<	150	mg/L	0.7	mg/L
1,1-Dichloropropene	<	150	mg/L		
1,2,3-Trichlorobenzene	<	150	mg/L		
1,2,3-Trichloropropane	<	150	mg/L		
1,2,4-Trichlorobenzene	<	150	mg/L		
1,2,4-Trimethylbenzene	<	150	mg/L		
1,2-Dibromoethane	<	150	mg/L		
1,2-Dichlorobenzene	<	150	mg/L		
1,2-Dichloroethane	<	150	mg/L	0.5	mg/L
1,2-Dichloropropane	<	150	mg/L		
1,3,5-Trimethyl benzene	<	150	mg/L		
1,3-Dichlorobenzene	<	150	mg/L		
1,3-Dichloropropane	<	150	mg/L		
1,4-Dichlorobenzene	<	150	mg/L		
2,2-Dichloropropane	<	150	mg/L		
2-Chloroethyl vinyl ether	<	150	mg/L		
2-Chlorotoluene	<	150	mg/L		
4-Chlorotoluene	<	150	mg/L		
4-Isopropyltoluene	<	150	mg/L		
Benzene		3000	mg/L	0.5	mg/L
Bromobenzene	<	150	mg/L		
Bromochloromethane	<	150	mg/L		
Bromodichloromethane	<	150	mg/L		
Bromoform	<	150	mg/L		
Bromomethane	<	250	mg/L		
Carbon Tetrachloride	<	150	mg/L	0.5	mg/L
Chlorobenzene	<	150	mg/L	100	mg/L
Chloroethane	<	250	mg/L		
Chloroform	<	150	mg/L	6	mg/L
Chloromethane (Methyl Chloride)	<	250	mg/L		
cis-1,2-Dichloroethylene	<	150	mg/L		
cis-1,3-Dichloropropylene	<	150	mg/L		
Dibromochloromethane	<	150	mg/L		
Dibromomethane (Methylene Bromide)	<	150	mg/L		
Dichlorodifluoromethane	<	150	mg/L		
Ethyl Benzene	<	150	mg/L		
Hexachlorobutadiene	<	150	mg/L		
Isopropylbenzene	<	150	mg/L		
m,p-Xylene	<	150	mg/L		
Methyl Ethyl Ketone	<	250	mg/L	200	mg/L
Methylene Chlrodie (Dichloromethane)	<	250	mg/L		

Results of Hazardous Waste Characterization from Drum CSB 100617-WI-1
CNB Neutralant

Sample Parameter		Concentration	Unit	Limit	Unit
Naphthalene	<	150	mg/L		
n-Butylbenzene	<	150	mg/L		
n-Propylbenzene	<	150	mg/L		
o-Xylene	<	150	mg/L		
sec-Butyl Benzene	<	150	mg/L		
Styrene	<	150	mg/L		
tert-Butylbenzene	<	150	mg/L		
Tetrachloroethylene	<	150	mg/L	0.7	mg/L
Toluene	<	150	mg/L		
trans-1,2-Dichloroethylene	<	150	mg/L		
trans-1,3-Dichloropropylene	<	150	mg/L		
Trichloroethylene	<	150	mg/L	0.5	mg/L
Trichlorofluoromethane	<	250	mg/L		
Vinyl Chloride	<	250	mg/L	0.2	mg/L
1,2,4-Trichlorobenzene	<	0.76	mg/L		
1,2-Dichlorobenzene	<	0.88	mg/L		
1,2-Diphenylhydrazine as Azobenzene	<	0.68	mg/L		
1,3-Dichlorobenzene	<	0.88	mg/L		
1,4-Dichlorobenzene	<	0.72	mg/L	7.5	mg/L
2,3-Dichloroaniline	<	0.52	mg/L		
2,4,5-Trichlorophenol	<	0.72	mg/L	2	mg/L
2,4,6-Trichlorophenol	<	0.72	mg/L		
2,4-Dichlorophenol	<	0.36	mg/L		
2,4-Dimethylphenol	<	4	mg/L		
2,4-Dinitrophenol	<	4	mg/L		
2,4-Dinitrotoluene	<	0.32	mg/L	0.13	mg/L
2,6-Dinitrotoluene	<	0.36	mg/L		
2-Chloronaphthalene	<	0.56	mg/L		
2-Chlorphenol	<	0.6	mg/L		
2-Methyl-4,6-dinitrophenol	<	4	mg/L		
2-Methylnaphthalene	<	0.2	mg/L		
2-Methylphenol (o-cresol)	<	1.48	mg/L	200	mg/L
2-Nitroaniline	<	0.68	mg/L		
2-Nitrophenol	<	0.72	mg/L		
3,3'-Dichlorobenzidine	<	0.96	mg/L		
3-Nitroaniline	<	0.6	mg/L		
4-Bromophenyl phenyl ether	<	0.52	mg/L		
4-Chloro-3-methylphenol	<	0.52	mg/L		
4-Chloroaniline	<	0.84	mg/L		
4-Chlorophenyl phenyl ether	<	0.4	mg/L		
4-Methylphenol (p-cresol)	<	2.04	mg/L	200	mg/L
4-Nitroaniline	<	0.72	mg/L		
4-Nitrophenol	<	4	mg/L		
Acenaphthene	<	0.6	mg/L		
Acenaphthylene	<	0.88	mg/L		
Acetophenone		84	mg/L		

Results of Hazardous Waste Characterization from Drum CSB 100617-WI-1
CNB Neutralant

Sample Parameter		Concentration	Unit	Limit	Unit
Aniline	<	1.36	mg/L		
Anthracene	<	0.44	mg/L		
a-Terpineol	<	0.72	mg/L		
Benzidine	<	6	mg/L		
Benzo(a)anthracene	<	0.64	mg/L		
Benzo(a)pyrene	<	0.6	mg/L		
Benzo(b)fluoranthene	<	0.6	mg/L		
Benzo(ghi)perylene	<	0.8	mg/L		
Benzo(k)fluoranthen	<	0.72	mg/L		
Benzoic Acid		180	mg/L		
Benzyl Alcohol	<	0.52	mg/L		
Benzyl butyl phthalate	<	1.6	mg/L		
Bis(2-chloroethoxy)methane	<	0.4	mg/L		
Bis(2-chloroethyl)ether	<	0.44	mg/L		
Bis(2-chloroisopropyl)ether	<	0.48	mg/L		
Bis(2-ethylhexyl)phthalate	<	3.4	mg/L		
Carbazole	<	1.6	mg/L		
Chrysene	<	0.56	mg/L		
Dibenzo(a,h)anthracene	<	1.32	mg/L		
Dibenzofuran	<	0.32	mg/L		
Diethyl phthalate	<	1	mg/L		
Dimethyl phthalate	<	0.8	mg/L		
Di-n-butylphthalate	<	0.76	mg/L		
Di-n-octylphthalate	<	1.56	mg/L		
Fluoranthene	<	0.68	mg/L		
Fluorene	<	0.76	mg/L		
Hexachlorobenzene	<	0.96	mg/L	0.13	mg/L
Hexachlorobutadiene	<	1.4	mg/L	0.5	mg/L
Hexachlorocyclopentadiene	<	1.24	mg/L		
Hexachloroethane	<	1.36	mg/L	3	mg/L
Indeno(1,2,3-cd)pyrene	<	0.88	mg/L		
Isophorone	<	0.64	mg/L		
Naphthalene	<	0.32	mg/L		
n-Decane	<	1.64	mg/L		
Nitrobenzene	<	0.6	mg/L	2	mg/L
N-Nitrosodimethylamine	<	1.48	mg/L		
N-Nitrosodi-n-propylamine	<	0.52	mg/L		
N-Nitrosodiphenylamine	<	0.56	mg/L		
n-Octadecane	<	1	mg/L		
Pentachlorophenol	<	4	mg/L	100	mg/L
Phenanthrene	<	0.44	mg/L		
Phenol		1.27	mg/L		
Pyrene	<	0.8	mg/L		
Pyridine	<	0.8	mg/L	5*	mg/L
Total Arsenic	<	0.26	mg/L	100*	mg/L
Total Barium		0.0934	mg/L	2000*	mg/L

Results of Hazardous Waste Characterization from Drum CSB 100617-WI-1
CNB Neutralant

Sample Parameter		Concentration	Unit	Limit	Unit
Total Cadmium		0.0505	mg/L	20*	mg/L
Total Chromium	<	0.05	mg/L	100*	mg/L
Total Lead		3.5	mg/L	100*	mg/L
Total Selenium	<	0.25	mg/L	20*	mg/L
Total Silver	<	0.05	mg/L	100*	mg/L
Total Mercury		0.0154	mg/L	4*	mg/L
Flash Point	>	150	° F	<140 °F	
Reactive Sulfide		256	mg/L		
TOX					

*TCLP Limit times a 20:1 dilution factor

Results of Hazardous Waste Characterization from Drum CSB 100617-WI-4
CNB Rinsate (Accumulation Date: 6/24/10)

Sample Parameter		Concentration	Unit	Limit	Unit
1,1,1,2-Tetrachloroethane	<	60	mg/L		
1,1,1-Trichloroethane	<	60	mg/L		
1,1,2,2-Tetrachloroethane	<	60	mg/L		
1,1,2-Trichloroethane	<	60	mg/L		
1,1-Dichloroethane	<	60	mg/L		
1,1-Dichloroethylene	<	60	mg/L	0.7	mg/L
1,1-Dichloropropene	<	60	mg/L		
1,2,3-Trichlorobenzene	<	60	mg/L		
1,2,3-Trichloropropane	<	60	mg/L		
1,2,4-Trichlorobenzene	<	60	mg/L		
1,2,4-Trimethylbenzene	<	60	mg/L		
1,2-Dibromoethane	<	60	mg/L		
1,2-Dichlorobenzene	<	60	mg/L		
1,2-Dichloroethane	<	60	mg/L	0.5	mg/L
1,2-Dichloropropane	<	60	mg/L		
1,3,5-Trimethyl benzene	<	60	mg/L		
1,3-Dichlorobenzene	<	60	mg/L		
1,3-Dichloropropane	<	60	mg/L		
1,4-Dichlorobenzene	<	60	mg/L		
2,2-Dichloropropane	<	60	mg/L		
2-Chloroethyl vinyl ether	<	60	mg/L		
2-Chlorotoluene	<	60	mg/L		
4-Chlorotoluene	<	60	mg/L		
4-Isopropyltoluene	<	60	mg/L		
Benzene		600	mg/L	0.5	mg/L
Bromobenzene	<	60	mg/L		
Bromochloromethane	<	60	mg/L		
Bromodichloromethane	<	60	mg/L		
Bromoform	<	60	mg/L		
Bromomethane	<	100	mg/L		
Carbon Tetrachloride	<	60	mg/L	0.5	mg/L
Chlorobenzene	<	60	mg/L	100	mg/L
Chloroethane	<	100	mg/L		
Chloroform	<	60	mg/L	6	mg/L
Chloromethane (Methyl Chloride)	<	100	mg/L		
cis-1,2-Dichloroethylene	<	60	mg/L		
cis-1,3-Dichloropropylene	<	60	mg/L		
Dibromochloromethane	<	60	mg/L		
Dibromomethane (Methylene Bromide)	<	60	mg/L		
Dichlorodifluoromethane	<	60	mg/L		
Ethyl Benzene	<	60	mg/L		
Hexachlorobutadiene	<	60	mg/L		
Isopropylbenzene	<	60	mg/L		
m,p-Xylene	<	60	mg/L		
Methyl Ethyl Ketone	<	100	mg/L	200	mg/L
Methylene Chlrodie (Dichloromethane)	<	100	mg/L		

Results of Hazardous Waste Characterization from Drum CSB 100617-WI-4
CNB Rinsate (Accumulation Date: 6/24/10)

Sample Parameter		Concentration	Unit	Limit	Unit
Naphthalene	<	60	mg/L		
n-Butylbenzene	<	60	mg/L		
n-Propylbenzene	<	60	mg/L		
o-Xylene	<	60	mg/L		
sec-Butyl Benzene	<	60	mg/L		
Styrene	<	60	mg/L		
tert-Butylbenzene	<	60	mg/L		
Tetrachloroethylene	<	60	mg/L	0.7	mg/L
Toluene	<	60	mg/L		
trans-1,2-Dichloroethylene	<	60	mg/L		
trans-1,3-Dichloropropylene	<	60	mg/L		
Trichloroethylene	<	60	mg/L	0.5	mg/L
Trichlorofluoromethane	<	100	mg/L		
Vinyl Chloride	<	100	mg/L	0.2	mg/L
1,2,4-Trichlorobenzene	<	0.38	mg/L		
1,2-Dichlorobenzene	<	0.44	mg/L		
1,2-Diphenylhydrazine as Azobenzene	<	0.34	mg/L		
1,3-Dichlorobenzene	<	0.44	mg/L		
1,4-Dichlorobenzene	<	0.36	mg/L	7.5	mg/L
2,3-Dichloroaniline	<	0.26	mg/L		
2,4,5-Trichlorophenol	<	0.36	mg/L	2	mg/L
2,4,6-Trichlorophenol	<	0.36	mg/L		
2,4-Dichlorophenol	<	0.18	mg/L		
2,4-Dimethylphenol	<	2	mg/L		
2,4-Dinitrophenol	<	2	mg/L		
2,4-Dinitrotoluene	<	0.16	mg/L	0.13	mg/L
2,6-Dinitrotoluene	<	0.18	mg/L		
2-Chloronaphthalene	<	0.28	mg/L		
2-Chlorphenol	<	0.3	mg/L		
2-Methyl-4,6-dinitrophenol	<	2	mg/L		
2-Methylnaphthalene	<	0.1	mg/L		
2-Methylphenol (o-cresol)	<	0.74	mg/L	200	mg/L
2-Nitroaniline	<	0.34	mg/L		
2-Nitrophenol	<	0.36	mg/L		
3,3'-Dichlorobenzidine	<	0.48	mg/L		
3-Nitroaniline	<	0.3	mg/L		
4-Bromophenyl phenyl ether	<	0.26	mg/L		
4-Chloro-3-methylphenol	<	0.26	mg/L		
4-Chloroaniline	<	0.42	mg/L		
4-Chlorophenyl phenyl ether	<	0.2	mg/L		
4-Methylphenol (p-cresol)	<	1.02	mg/L	200	mg/L
4-Nitroaniline	<	0.36	mg/L		
4-Nitrophenol	<	2	mg/L		
Acenaphthene	<	0.3	mg/L		
Acenaphthylene	<	0.44	mg/L		
Acetophenone		7.25	mg/L		

Results of Hazardous Waste Characterization from Drum CSB 100617-WI-4
CNB Rinsate (Accumulation Date: 6/24/10)

Sample Parameter		Concentration	Unit	Limit	Unit
Aniline	<	0.68	mg/L		
Anthracene	<	0.22	mg/L		
a-Terpineol	<	0.36	mg/L		
Benzidine	<	3	mg/L		
Benzo(a)anthracene	<	0.32	mg/L		
Benzo(a)pyrene	<	0.3	mg/L		
Benzo(b)fluoranthene	<	0.3	mg/L		
Benzo(ghi)perylene	<	0.4	mg/L		
Benzo(k)fluoranthen	<	0.36	mg/L		
Benzoic Acid		9.39	mg/L		
Benzyl Alcohol	<	0.26	mg/L		
Benzyl butyl phthalate	<	0.8	mg/L		
Bis(2-chloroethoxy)methane	<	0.2	mg/L		
Bis(2-chloroethyl)ether	<	0.22	mg/L		
Bis(2-chloroisopropyl)ether	<	0.24	mg/L		
Bis(2-ethylhexyl)phthalate	<	1.7	mg/L		
Carbazole	<	0.8	mg/L		
Chrysene	<	0.28	mg/L		
Dibenzo(a,h)anthracene	<	0.66	mg/L		
Dibenzofuran	<	0.16	mg/L		
Diethyl phthalate	<	0.5	mg/L		
Dimethyl phthalate	<	0.4	mg/L		
Di-n-butylphthalate	<	0.38	mg/L		
Di-n-octylphthalate	<	0.78	mg/L		
Fluoranthene	<	0.34	mg/L		
Fluorene	<	0.38	mg/L		
Hexachlorobenzene	<	0.48	mg/L	0.13	mg/L
Hexachlorobutadiene	<	0.7	mg/L	0.5	mg/L
Hexachlorocyclopentadiene	<	0.62	mg/L		
Hexachloroethane	<	0.68	mg/L	3	mg/L
Indeno(1,2,3-cd)pyrene	<	0.44	mg/L		
Isophorone	<	0.32	mg/L		
Naphthalene	<	0.16	mg/L		
n-Decane	<	0.82	mg/L		
Nitrobenzene	<	0.3	mg/L	2	mg/L
N-Nitrosodimethylamine	<	0.74	mg/L		
N-Nitrosodi-n-propylamine	<	0.26	mg/L		
N-Nitrosodiphenylamine	<	0.28	mg/L		
n-Octadecane	<	0.5	mg/L		
Pentachlorophenol	<	2	mg/L	100	mg/L
Phenanthrene	<	0.22	mg/L		
Phenol		0.18	mg/L		
Pyrene	<	0.4	mg/L		
Pyridine	<	0.4	mg/L	5*	mg/L
Total Arsenic	<	0.26	mg/L	100*	mg/L
Total Barium		0.0981	mg/L	2000*	mg/L

Results of Hazardous Waste Characterization from Drum CSB 100617-WI-4
CNB Rinsate (Accumulation Date: 6/24/10)

Sample Parameter		Concentration	Unit	Limit	Unit
Total Cadmium	<	0.0505	mg/L	20*	mg/L
Total Chromium	<	0.05	mg/L	100*	mg/L
Total Lead		3.5	mg/L	100*	mg/L
Total Selenium	<	0.25	mg/L	20*	mg/L
Total Silver	<	0.05	mg/L	100*	mg/L
Total Mercury		0.0154	mg/L	4*	mg/L
Flash Point	>	150	° F	<140 °F	
Reactive Sulfide		256	mg/L		
TOX					

*TCLP Limit times a 20:1 dilution factor

Results of Hazardous Waste Characterization from Drum CSB 100625-WIA
20% Weight NaOH Rinsate

Sample Parameter		Concentration	Unit	Limit	Unit
1,1,1,2-Tetrachloroethane	<	0.3	mg/L		
1,1,1-Trichloroethane	<	0.3	mg/L		
1,1,2,2-Tetrachloroethane	<	0.3	mg/L		
1,1,2-Trichloroethane	<	0.3	mg/L		
1,1-Dichloroethane	<	0.3	mg/L		
1,1-Dichloroethylene	<	0.3	mg/L	0.7	mg/L
1,1-Dichloropropene	<	0.3	mg/L		
1,2,3-Trichlorobenzene	<	0.3	mg/L		
1,2,3-Trichloropropane	<	0.3	mg/L		
1,2,4-Trichlorobenzene	<	0.3	mg/L		
1,2,4-Trimethylbenzene	<	0.3	mg/L		
1,2-Dibromoethane	<	0.3	mg/L		
1,2-Dichlorobenzene	<	0.3	mg/L		
1,2-Dichloroethane	<	0.3	mg/L	0.5	mg/L
1,2-Dichloropropane	<	0.3	mg/L		
1,3,5-Trimethyl benzene	<	0.3	mg/L		
1,3-Dichlorobenzene	<	0.3	mg/L		
1,3-Dichloropropane	<	0.3	mg/L		
1,4-Dichlorobenzene	<	0.3	mg/L		
2,2-Dichloropropane	<	0.3	mg/L		
2-Chloroethyl vinyl ether	<	0.3	mg/L		
2-Chlorotoluene	<	0.3	mg/L		
4-Chlorotoluene	<	0.3	mg/L		
4-Isopropyltoluene	<	0.3	mg/L		
Benzene	<	0.3	mg/L	0.5	mg/L
Bromobenzene	<	0.3	mg/L		
Bromochloromethane	<	0.3	mg/L		
Bromodichloromethane	<	0.3	mg/L		
Bromoform	<	0.3	mg/L		
Bromomethane	<	0.3	mg/L		
Carbon Tetrachloride	<	0.3	mg/L	0.5	mg/L
Chlorobenzene	<	0.3	mg/L	100	mg/L
Chloroethane	<	0.3	mg/L		
Chloroform	<	0.3	mg/L	6	mg/L
Chloromethane (Methyl Chloride)		2.9	mg/L		
cis-1,2-Dichloroethylene	<	0.3	mg/L		
cis-1,3-Dichloropropylene	<	0.3	mg/L		
Dibromochloromethane	<	0.3	mg/L		
Dibromomethane (Methylene Bromide)	<	0.3	mg/L		
Dichlorodifluoromethane	<	0.3	mg/L		
Ethyl Benzene	<	0.3	mg/L		
Hexachlorobutadiene	<	0.3	mg/L		
Isopropylbenzene	<	0.3	mg/L		
m,p-Xylene	<	0.3	mg/L		
Methyl Ethyl Ketone	<	0.5	mg/L	200	mg/L
Methylene Chlrodie (Dichloromethane)		7	mg/L		

Results of Hazardous Waste Characterization from Drum CSB 100625-WIA
20% Weight NaOH Rinsate

Sample Parameter		Concentration	Unit	Limit	Unit
Naphthalene	<	0.3	mg/L		
n-Butylbenzene	<	0.3	mg/L		
n-Propylbenzene	<	0.3	mg/L		
o-Xylene	<	0.3	mg/L		
sec-Butyl Benzene	<	0.3	mg/L		
Styrene	<	0.3	mg/L		
tert-Butylbenzene	<	0.3	mg/L		
Tetrachloroethylene	<	0.3	mg/L	0.7	mg/L
Toluene	<	0.3	mg/L		
trans-1,2-Dichloroethylene	<	0.3	mg/L		
trans-1,3-Dichloropropylene	<	0.3	mg/L		
Trichloroethylene	<	0.3	mg/L	0.5	mg/L
Trichlorofluoromethane	<	0.5	mg/L		
Vinyl Chloride	<	0.5	mg/L	0.2	mg/L
1,2,4-Trichlorobenzene	<	0.019	mg/L		
1,2-Dichlorobenzene	<	0.022	mg/L		
1,2-Diphenylhydrazine as Azobenzene	<	0.017	mg/L		
1,3-Dichlorobenzene	<	0.022	mg/L		
1,4-Dichlorobenzene	<	0.018	mg/L	7.5	mg/L
2,3-Dichloroaniline	<	0.013	mg/L		
2,4,5-Trichlorophenol	<	0.018	mg/L	2	mg/L
2,4,6-Trichlorophenol	<	0.018	mg/L		
2,4-Dichlorophenol	<	0.009	mg/L		
2,4-Dimethylphenol	<	0.1	mg/L		
2,4-Dinitrophenol	<	0.1	mg/L		
2,4-Dinitrotoluene	<	0.008	mg/L	0.13	mg/L
2,6-Dinitrotoluene	<	0.009	mg/L		
2-Chloronaphthalene	<	0.014	mg/L		
2-Chlorphenol	<	0.015	mg/L		
2-Methyl-4,6-dinitrophenol	<	0.1	mg/L		
2-Methylnaphthalene	<	0.005	mg/L		
2-Methylphenol (o-cresol)	<	0.037	mg/L	200	mg/L
2-Nitroaniline	<	0.017	mg/L		
2-Nitrophenol	<	0.018	mg/L		
3,3'-Dichlorobenzidine	<	0.024	mg/L		
3-Nitroaniline	<	0.015	mg/L		
4-Bromophenyl phenyl ether	<	0.013	mg/L		
4-Chloro-3-methylphenol	<	0.013	mg/L		
4-Chloroaniline	<	0.021	mg/L		
4-Chlorophenyl phenyl ether	<	0.01	mg/L		
4-Methylphenol (p-cresol)	<	0.051	mg/L	200	mg/L
4-Nitroaniline	<	0.018	mg/L		
4-Nitrophenol	<	0.1	mg/L		
Acenaphthene	<	0.015	mg/L		
Acenaphthylene	<	0.022	mg/L		
Acetophenone	<	0.018	mg/L		

Results of Hazardous Waste Characterization from Drum CSB 100625-WIA
20% Weight NaOH Rinsate

Sample Parameter		Concentration	Unit	Limit	Unit
Aniline	<	0.034	mg/L		
Anthracene	<	0.011	mg/L		
a-Terpineol	<	0.018	mg/L		
Benzidine	<	0.15	mg/L		
Benzo(a)anthracene	<	0.016	mg/L		
Benzo(a)pyrene	<	0.015	mg/L		
Benzo(b)fluoranthene	<	0.015	mg/L		
Benzo(ghi)perylene	<	0.02	mg/L		
Benzo(k)fluoranthen	<	0.018	mg/L		
Benzoic Acid	<	0.1	mg/L		
Benzyl Alcohol	<	0.013	mg/L		
Benzyl butyl phthalate	<	0.04	mg/L		
Bis(2-chloroethoxy)methane	<	0.01	mg/L		
Bis(2-chloroethyl)ether	<	0.011	mg/L		
Bis(2-chloroisopropyl)ether	<	0.012	mg/L		
Bis(2-ethylhexyl)phthalate	<	0.085	mg/L		
Carbazole	<	0.04	mg/L		
Chrysene	<	0.014	mg/L		
Dibenzo(a,h)anthracene	<	0.033	mg/L		
Dibenzofuran	<	0.008	mg/L		
Diethyl phthalate	<	0.025	mg/L		
Dimethyl phthalate	<	0.02	mg/L		
Di-n-butylphthalate	<	0.019	mg/L		
Di-n-octylphthalate	<	0.039	mg/L		
Fluoranthene	<	0.017	mg/L		
Fluorene	<	0.019	mg/L		
Hexachlorobenzene	<	0.024	mg/L	0.13	mg/L
Hexachlorobutadiene	<	0.035	mg/L	0.5	mg/L
Hexachlorocyclopentadiene	<	0.031	mg/L		
Hexachloroethane	<	0.034	mg/L	3	mg/L
Indeno(1,2,3-cd)pyrene	<	0.022	mg/L		
Isophorone	<	0.016	mg/L		
Naphthalene	<	0.008	mg/L		
n-Decane	<	0.041	mg/L		
Nitrobenzene	<	0.015	mg/L	2	mg/L
N-Nitrosodimethylamine	<	0.037	mg/L		
N-Nitrosodi-n-propylamine	<	0.013	mg/L		
N-Nitrosodiphenylamine	<	0.014	mg/L		
n-Octadecane	<	0.025	mg/L		
Pentachlorophenol	<	0.1	mg/L	100	mg/L
Phenanthrene	<	0.011	mg/L		
Phenol	<	0.009	mg/L		
Pyrene	<	0.02	mg/L		
Pyridine	<	0.02	mg/L	5*	mg/L
Total Arsenic	<	0.052	mg/L	100*	mg/L
Total Barium	<	0.004	mg/L	2000*	mg/L

Results of Hazardous Waste Characterization from Drum CSB 100625-WIA
20% Weight NaOH Rinsate

Sample Parameter		Concentration	Unit	Limit	Unit
Total Cadmium	<	0.003	mg/L	20*	mg/L
Total Chromium		0.0333	mg/L	100*	mg/L
Total Lead		0.154	mg/L	100*	mg/L
Total Selenium	<	0.05	mg/L	20*	mg/L
Total Silver	<	0.01	mg/L	100*	mg/L
Total Mercury	<	0.0004	mg/L	4*	mg/L
Flash Point	>	150	° F	<140 °F	
Reactive Sulfide		16	mg/L		
TOX					

*TCLP Limit times a 20:1 dilution factor

Results of Hazardous Waste Characterization from Drum CSB 100627-WIA
Water Rinsate

Sample Parameter		Concentration	Unit	Limit	Unit
1,1,1,2-Tetrachloroethane	<	0.3	mg/L		
1,1,1-Trichloroethane	<	0.3	mg/L		
1,1,2,2-Tetrachloroethane	<	0.3	mg/L		
1,1,2-Trichloroethane	<	0.3	mg/L		
1,1-Dichloroethane	<	0.3	mg/L		
1,1-Dichloroethylene	<	0.3	mg/L	0.7	mg/L
1,1-Dichloropropene	<	0.3	mg/L		
1,2,3-Trichlorobenzene	<	0.3	mg/L		
1,2,3-Trichloropropane	<	0.3	mg/L		
1,2,4-Trichlorobenzene	<	0.3	mg/L		
1,2,4-Trimethylbenzene	<	0.3	mg/L		
1,2-Dibromoethane	<	0.3	mg/L		
1,2-Dichlorobenzene	<	0.3	mg/L		
1,2-Dichloroethane	<	0.3	mg/L	0.5	mg/L
1,2-Dichloropropane	<	0.3	mg/L		
1,3,5-Trimethyl benzene	<	0.3	mg/L		
1,3-Dichlorobenzene	<	0.3	mg/L		
1,3-Dichloropropane	<	0.3	mg/L		
1,4-Dichlorobenzene	<	0.3	mg/L		
2,2-Dichloropropane	<	0.3	mg/L		
2-Chloroethyl vinyl ether	<	0.3	mg/L		
2-Chlorotoluene	<	0.3	mg/L		
4-Chlorotoluene	<	0.3	mg/L		
4-Isopropyltoluene	<	0.3	mg/L		
Benzene		0.81	mg/L	0.5	mg/L
Bromobenzene	<	0.3	mg/L		
Bromochloromethane	<	0.3	mg/L		
Bromodichloromethane	<	0.3	mg/L		
Bromoform	<	0.3	mg/L		
Bromomethane	<	0.3	mg/L		
Carbon Tetrachloride	<	0.3	mg/L	0.5	mg/L
Chlorobenzene	<	0.3	mg/L	100	mg/L
Chloroethane	<	0.3	mg/L		
Chloroform	<	0.3	mg/L	6	mg/L
Chloromethane (Methyl Chloride)	<	0.5	mg/L		
cis-1,2-Dichloroethylene	<	0.3	mg/L		
cis-1,3-Dichloropropylene	<	0.3	mg/L		
Dibromochloromethane	<	0.3	mg/L		
Dibromomethane (Methylene Bromide)	<	0.3	mg/L		
Dichlorodifluoromethane	<	0.3	mg/L		
Ethyl Benzene	<	0.3	mg/L		
Hexachlorobutadiene	<	0.3	mg/L		
Isopropylbenzene	<	0.3	mg/L		
m,p-Xylene	<	0.3	mg/L		
Methyl Ethyl Ketone	<	0.5	mg/L	200	mg/L
Methylene Chlrodie (Dichloromethane)		0.81	mg/L		

Results of Hazardous Waste Characterization from Drum CSB 100627-WIA
Water Rinsate

Sample Parameter		Concentration	Unit	Limit	Unit
Naphthalene	<	0.3	mg/L		
n-Butylbenzene	<	0.3	mg/L		
n-Propylbenzene	<	0.3	mg/L		
o-Xylene	<	0.3	mg/L		
sec-Butyl Benzene	<	0.3	mg/L		
Styrene	<	0.3	mg/L		
tert-Butylbenzene	<	0.3	mg/L		
Tetrachloroethylene	<	0.3	mg/L	0.7	mg/L
Toluene	<	0.3	mg/L		
trans-1,2-Dichloroethylene	<	0.3	mg/L		
trans-1,3-Dichloropropylene	<	0.3	mg/L		
Trichloroethylene	<	0.3	mg/L	0.5	mg/L
Trichlorofluoromethane	<	0.5	mg/L		
Vinyl Chloride	<	0.5	mg/L	0.2	mg/L
1,2,4-Trichlorobenzene	<	0.019	mg/L		
1,2-Dichlorobenzene	<	0.022	mg/L		
1,2-Diphenylhydrazine as Azobenzene	<	0.017	mg/L		
1,3-Dichlorobenzene	<	0.022	mg/L		
1,4-Dichlorobenzene	<	0.018	mg/L	7.5	mg/L
2,3-Dichloroaniline	<	0.013	mg/L		
2,4,5-Trichlorophenol	<	0.018	mg/L	2	mg/L
2,4,6-Trichlorophenol	<	0.018	mg/L		
2,4-Dichlorophenol	<	0.009	mg/L		
2,4-Dimethylphenol	<	0.1	mg/L		
2,4-Dinitrophenol	<	0.1	mg/L		
2,4-Dinitrotoluene	<	0.008	mg/L	0.13	mg/L
2,6-Dinitrotoluene	<	0.009	mg/L		
2-Chloronaphthalene	<	0.014	mg/L		
2-Chlorphenol	<	0.015	mg/L		
2-Methyl-4,6-dinitrophenol	<	0.1	mg/L		
2-Methylnaphthalene	<	0.005	mg/L		
2-Methylphenol (o-cresol)	<	0.037	mg/L	200	mg/L
2-Nitroaniline	<	0.017	mg/L		
2-Nitrophenol	<	0.018	mg/L		
3,3'-Dichlorobenzidine	<	0.024	mg/L		
3-Nitroaniline	<	0.015	mg/L		
4-Bromophenyl phenyl ether	<	0.013	mg/L		
4-Chloro-3-methylphenol	<	0.013	mg/L		
4-Chloroaniline	<	0.021	mg/L		
4-Chlorophenyl phenyl ether	<	0.01	mg/L		
4-Methylphenol (p-cresol)	<	0.051	mg/L	200	mg/L
4-Nitroaniline	<	0.018	mg/L		
4-Nitrophenol	<	0.1	mg/L		
Acenaphthene	<	0.015	mg/L		
Acenaphthylene	<	0.022	mg/L		
Acetophenone		0.424	mg/L		

Results of Hazardous Waste Characterization from Drum CSB 100627-WIA
Water Rinsate

Sample Parameter		Concentration	Unit	Limit	Unit
Aniline	<	0.034	mg/L		
Anthracene	<	0.011	mg/L		
a-Terpineol	<	0.018	mg/L		
Benzidine	<	0.15	mg/L		
Benzo(a)anthracene	<	0.016	mg/L		
Benzo(a)pyrene	<	0.015	mg/L		
Benzo(b)fluoranthene	<	0.015	mg/L		
Benzo(ghi)perylene	<	0.02	mg/L		
Benzo(k)fluoranthen	<	0.018	mg/L		
Benzoic Acid	<	0.1	mg/L		
Benzyl Alcohol	<	0.013	mg/L		
Benzyl butyl phthalate	<	0.04	mg/L		
Bis(2-chloroethoxy)methane	<	0.01	mg/L		
Bis(2-chloroethyl)ether	<	0.011	mg/L		
Bis(2-chloroisopropyl)ether	<	0.012	mg/L		
Bis(2-ethylhexyl)phthalate	<	0.085	mg/L		
Carbazole	<	0.04	mg/L		
Chrysene	<	0.014	mg/L		
Dibenzo(a,h)anthracene	<	0.033	mg/L		
Dibenzofuran	<	0.008	mg/L		
Diethyl phthalate	<	0.025	mg/L		
Dimethyl phthalate	<	0.02	mg/L		
Di-n-butylphthalate	<	0.019	mg/L		
Di-n-ocylphthalate	<	0.039	mg/L		
Fluoranthene	<	0.017	mg/L		
Fluorene	<	0.019	mg/L		
Hexachlorobenzene	<	0.024	mg/L	0.13	mg/L
Hexachlorobutadiene	<	0.035	mg/L	0.5	mg/L
Hexachlorocyclopentadiene	<	0.031	mg/L		
Hexachloroethane	<	0.034	mg/L	3	mg/L
Indeno(1,2,3-cd)pyrene	<	0.022	mg/L		
Isophorone	<	0.016	mg/L		
Naphthalene	<	0.008	mg/L		
n-Decane	<	0.041	mg/L		
Nitrobenzene	<	0.015	mg/L	2	mg/L
N-Nitrosodimethylamine	<	0.037	mg/L		
N-Nitrosodi-n-propylamine	<	0.013	mg/L		
N-Nitrosodiphenylamine	<	0.014	mg/L		
n-Octadecane	<	0.025	mg/L		
Pentachlorophenol	<	0.1	mg/L	100	mg/L
Phenanthrene	<	0.011	mg/L		
Phenol		0.0193	mg/L		
Pyrene	<	0.02	mg/L		
Pyridine	<	0.02	mg/L	5*	mg/L
Total Arsenic	<	0.052	mg/L	100*	mg/L
Total Barium		0.0824	mg/L	2000*	mg/L

Results of Hazardous Waste Characterization from Drum CSB 100627-WIA
Water Rinsate

Sample Parameter		Concentration	Unit	Limit	Unit
Total Cadmium		0.0158	mg/L	20*	mg/L
Total Chromium		0.0375	mg/L	100*	mg/L
Total Lead		0.0284	mg/L	100*	mg/L
Total Selenium	<	0.05	mg/L	20*	mg/L
Total Silver	<	0.01	mg/L	100*	mg/L
Total Mercury	<	0.0004	mg/L	4*	mg/L
Flash Point	>	150	° F	<140 °F	
Reactive Sulfide		16	mg/L		
TOX					

*TCLP Limit times a 20:1 dilution factor

ALS Environmental | Analytical Laboratory Services, Inc.
Now part of the ALS Group

34 Dogwood Lane ▪ Middletown, PA 17057 ▪ Phone: 717-944-5541 ▪ Fax: 717-944-1430 ▪ www.analyticallab.com ▪ www.alsglobal.com

NELAP Certifications: NJ PA010 , NY 11759 , PA 22-293 DoD ELAP: A2LA 0818.01
State Certifications: CT PH-0224 , DE ID 11 , GA 914 , MA PA0102 , MD 128 , LA 04162 , VA 421 , WY EPA Region 8 , WV 343

June 2, 2011

Mr. Mansoor Zakai
U.S. Army Garrison
AMSSB-GSH-EW
P.O. Box 105
Gunpowder, MD 21010

Certificate of Analysis

Project Name:	**Option YEAR 4 (4/1/09-03/31/10)**	Workorder:	**9907013**
Purchase Order:	**W91ZLK05D0006/DO #7**	Workorder ID:	**29-11-HM223644/30-11-HM223645**

Dear Mr. Zakai,

Enclosed are the analytical results for samples received by the laboratory on Tuesday, May 24, 2011.

The ALS Environmental laboratory in Middletown, Pennsylvania (formerly Analytical Laboratory Services, Inc.) is a National Environmental Laboratory Accreditation Program (NELAP) accredited laboratory and as such, certifies that all applicable test results meet the requirements of NELAP.

If you have any questions regarding this certificate of analysis, please contact Susan Scherer (Project Coordinator) or Anna G Milliken (Technical Manager) at (717) 944-5541.

Please visit us at www.analyticallab.com for a listing of ALS' NELAP accreditations and Scope of Work, as well as other links to Water Quality documentation on the internet.

This laboratory report may not be reproduced, except in full, without the written approval of ALS Environmental.

CC: Mr. Fred Leonard, Ms. Joyce Cimino

This page is included as part of the Analytical Report and must be retained as a permanent record thereof.

Anna G Milliken
Technical Manager

ALS Environmental | Analytical Laboratory Services, Inc.
Now part of the ALS Group
NELAP ACCREDITED TNI LABORATORY

34 Dogwood Lane ▪ Middletown, PA 17057 ▪ Phone: 717-944-5541 ▪ Fax: 717-944-1430 ▪ www.analyticallab.com ▪ www.alsglobal.com

NELAP Certifications: NJ PA010 , NY 11759 , PA 22-293 DoD ELAP: A2LA 0818.01
State Certifications: CT PH-0224 , DE ID 11 , GA 914 , MA PA0102 , MD 128 , LA 04162 , VA 421 , WY EPA Region 8 , WV 343

SAMPLE SUMMARY

Workorder: 9907013 29-11-HM223644/30-11-HM223645 Discard Date: 06/23/2011

Lab ID	Sample ID	Matrix	Date Collected	Date Received	Collected By
9907013001	29-11-HM223644	Solid	5/24/11 08:00	5/24/11 19:05	Customer ~~DM55 280~~
9907013002	30-11-HM223645	Solid	5/24/11 08:00	5/24/11 19:05	Customer 320 lb.
9907013003	31-11-HM223651	Solid	5/24/11 08:00	5/24/11 19:05	Customer DM55 280

Workorder Comments:

Notes

- Samples collected by ALS personnel are done so in accordance with the procedures set forth in the ALS Field Sampling Plan (20 - Field Services Sampling Plan).
- All Waste Water analyses comply with methodology requirements of 40 CFR Part 136.
- All Drinking Water analyses comply with methodology requirements of 40 CFR Part 141.
- Unless otherwise noted, all quantitative results for soils are reported on a dry weight basis.
- The Chain of Custody document is included as part of this report.
- All Library Search analytes should be regarded as tentative identifications based on the presumptive evidence of the mass spectra. Concentrations reported are estimated values.

Standard Acronyms/Flags

J, B	Indicates an estimated value between the Method Detection Limit (MDL) and the Practical Quantitation Limit (PQL) for the analyte
U	Indicates that the analyte was Not Detected (ND)
N	Indicates presumptive evidence of the presence of a compound
MDL	Method Detection Limit
PQL	Practical Quantitation Limit
RDL	Reporting Detection Limit
ND	Not Detected - indicates that the analyte was Not Detected at the RDL
Cntr	Analysis was performed using this container
RegLmt	Regulatory Limit
LCS	Laboratory Control Sample
MS	Matrix Spike
MSD	Matrix Spike Duplicate
DUP	Sample Duplicate
%Rec	Percent Recovery
RPD	Relative Percent Difference

223644 -360
~~223649 -300~~
~~223646 -280~~
~~223647~~

223645 320
46 280
47 380
49 320
50 300
53 400
53 325

51 280

ALS Environmental | Analytical Laboratory Services, Inc.
Now part of the ALS Group
34 Dogwood Lane ▪ Middletown, PA 17057 ▪ Phone: 717-944-5541 ▪ Fax: 717-944-1430 ▪ www.analyticallab.com ▪ www.alsglobal.com

NELAP Certifications: NJ PA010 , NY 11759 , PA 22-293 DoD ELAP: A2LA 0818.01
State Certifications: CT PH-0224 , DE ID 11 , GA 914 , MA PA0102 , MD 128 , LA 04162 , VA 421 , WV EPA Region 8 , WV 343

ANALYTICAL RESULTS

water sodium hydroxide propylene glycol

~~Partial~~ New

Workorder: 9907013 29-11-HM223644/30-11-HM223645

Lab ID: **9907013002** Date Collected: 5/24/2011 08:00 Matrix: Solid
Sample ID: **30-11-HM223645** Date Received: 5/24/2011 19:05

Parameters	Results	Flag	Units	RDL	Method	Prepared	By	Analyzed	By	Cntr
TCLP VOLATILE ORGANICS										
Benzene	192000		ug/L	2500	SW846 8260B			6/2/11 16:22	MES	A
2-Butanone	ND		ug/L	1000	SW846 8260B			6/2/11 07:20	DD	A
Carbon Tetrachloride	31600	316	ug/L	2500	SW846 8260B			6/2/11 16:22	MES	A
Chlorobenzene	251		ug/L	100	SW846 8260B			6/2/11 07:20	DD	A
Chloroform	ND		ug/L	100	SW846 8260B			6/2/11 07:20	DD	A
1,2-Dichloroethane	ND		ug/L	100	SW846 8260B			6/2/11 07:20	DD	A
1,1-Dichloroethene	ND		ug/L	100	SW846 8260B			6/2/11 07:20	DD	A
Tetrachloroethene	510		ug/L	100	SW846 8260B			6/2/11 07:20	DD	A
Trichloroethene	125		ug/L	100	SW846 8260B			6/2/11 07:20	DD	A
Vinyl Chloride	ND		ug/L	100	SW846 8260B			6/2/11 07:20	DD	A
Surrogate Recoveries	*Results*	*Flag*	*Units*	*Limits*	*Method*	*Prepared*	*By*	*Analyzed*	*By*	*Cntr*
1,2-Dichloroethane-d4 (S)	90		%	62-133	SW846 8260B			6/2/11 07:20	DD	A
4-Bromofluorobenzene (S)	97.6		%	79-114	SW846 8260B			6/2/11 07:20	DD	A
Dibromofluoromethane (S)	80.7		%	78-116	SW846 8260B			6/2/11 07:20	DD	A
Toluene-d8 (S)	91.1		%	76-127	SW846 8260B			6/2/11 07:20	DD	A
1,2-Dichloroethane-d4 (S)	88.7		%	62-133	SW846 8260B			6/2/11 16:22	MES	A
4-Bromofluorobenzene (S)	95.4		%	79-114	SW846 8260B			6/2/11 16:22	MES	A
Dibromofluoromethane (S)	90.8		%	78-116	SW846 8260B			6/2/11 16:22	MES	A
Toluene-d8 (S)	89.7		%	76-127	SW846 8260B			6/2/11 16:22	MES	A
WET CHEMISTRY										
Moisture	77.3		%	0.1	SM20-2540 G			5/26/11 18:15	DLV	A
Total Solids	22.7		%	0.1	SM20-2540 G			5/26/11 18:15	DLV	A
TCLP METALS										
Arsenic, Total	1.7		mg/L	0.081	SW846 6010C	6/1/11	KMK	6/1/11 13:19	MWO	A2
Barium, Total	0.12		mg/L	0.099	SW846 6010C	6/1/11	KMK	6/1/11 13:19	MWO	A2
Cadmium, Total	0.085		mg/L	0.020	SW846 6010C	6/1/11	KMK	6/1/11 13:19	MWO	A2
Chromium, Total	0.055		mg/L	0.050	SW846 6010C	6/1/11	KMK	6/1/11 13:19	MWO	A2
Lead, Total	2.9		mg/L	0.060	SW846 6010C	6/1/11	KMK	6/1/11 13:19	MWO	A2
Mercury, Total	ND		mg/L	0.010	SW846 7470A	6/1/11	MNP	6/1/11 11:53	MNP	A1
Selenium, Total	1.2		mg/L	0.20	SW846 6010C	6/1/11	KMK	6/1/11 13:19	MWO	A2
Silver, Total	ND		mg/L	0.040	SW846 6010C	6/1/11	KMK	6/1/11 13:19	MWO	A2

D018

D019

~~203384~~ ~~85~~ ~~86~~ ~~87~~ 88 90

203382 203383

D010

ALS Environmental | Analytical Laboratory Services, Inc.
Now part of the ALS Group
34 Dogwood Lane ▪ Middletown, PA 17057 ▪ Phone: 717-944-5541 ▪ Fax: 717-944-1430 ▪ www.analyticallab.com ▪ www.alsglobal.com

NELAP Certifications: NJ PA010 , NY 11759 , PA 22-293 DoD ELAP: A2LA 0818.01
State Certifications: CT PH-0224 , DE ID 11 , GA 914 , MA PA0102 , MD 128 , LA 04162 , VA 421 , WY EPA Region 8 , WV 343

ANALYTICAL RESULTS

Workorder: 9907013 29-11-HM223644/30-11-HM223645

Lab ID: **9907013001** Date Collected: 5/24/2011 08:00 Matrix: Solid
Sample ID: **29-11-HM223644** Date Received: 5/24/2011 19:05

Parameters	Results	Flag	Units	RDL	Method	Prepared	By	Analyzed	By	Cntr
TCLP LEACHATE										
Final pH	13.00		pH_Units		SW846 1311			5/28/11 10:00	EL	A

D002

Sample Comments:

The percent dry solid per the EPA leaching procedure was less than 0.5%. The sample was filtered to form the leachate.

One or more internal standards for the metals analysis were recovered at <70% due to sample matrix interference. The sample was diluted until the internal standard was within the required range. The detection limits were raised. MWO 6-1-11

One or more of the method 8260 internal standards were recovered outside of the control limits.

The GCMS volatiles analysis was performed at a dilution due to the level of target compounds.

Anna G Milliken
Technical Manager

ALS Environmental | Analytical Laboratory Services, Inc.
Now part of the ALS Group

34 Dogwood Lane ▪ Middletown, PA 17057 ▪ Phone: 717-944-5541 ▪ Fax: 717-944-1430 ▪ www.analyticallab.com ▪ www.alsglobal.com

NELAP Certifications: NJ PA010 , NY 11759 , PA 22-293 DoD ELAP: A2LA 0818.01
State Certifications: CT PH-0224 , DE ID 11 , GA 914 , MA PA0102 , MD 128 , LA 04162 , VA 421 , WY EPA Region 8 , WV 343

ANALYTICAL RESULTS

~~Neutralant~~ Rinse

Workorder: 9907013 29-11-HM223644/30-11-HM223645

Lab ID: **9907013001** Date Collected: 5/24/2011 08:00 Matrix: Solid

Sample ID: **29-11-HM223644** Date Received: 5/24/2011 19:05

Parameters	Results	Flag	Units	RDL	Method	Prepared	By	Analyzed	By	Cntr
TCLP VOLATILE ORGANICS										
Benzene	1060000		ug/L	25000	SW846 8260B			6/2/11 14:38	MES	A
2-Butanone	ND		ug/L	50000	SW846 8260B			6/2/11 08:41	DD	A
Carbon Tetrachloride	ND		ug/L	5000	SW846 8260B			6/2/11 08:41	DD	A
Chlorobenzene	ND		ug/L	5000	SW846 8260B			6/2/11 08:41	DD	A
Chloroform	ND	1	ug/L	5000	SW846 8260B			6/2/11 08:41	DD	A
1,2-Dichloroethane	ND		ug/L	5000	SW846 8260B			6/2/11 08:41	DD	A
1,1-Dichloroethene	ND		ug/L	5000	SW846 8260B			6/2/11 08:41	DD	A
Tetrachloroethene	ND		ug/L	5000	SW846 8260B			6/2/11 08:41	DD	A
Trichloroethene	ND		ug/L	5000	SW846 8260B			6/2/11 08:41	DD	A
Vinyl Chloride	ND		ug/L	5000	SW846 8260B			6/2/11 08:41	DD	A
Surrogate Recoveries	*Results*	*Flag*	*Units*	*Limits*	*Method*	*Prepared*	*By*	*Analyzed*	*By*	*Cntr*
1,2-Dichloroethane-d4 (S)	106		%	62-133	SW846 8260B			6/2/11 08:41	DD	A
4-Bromofluorobenzene (S)	83.9		%	79-114	SW846 8260B			6/2/11 08:41	DD	A
Dibromofluoromethane (S)	96		%	78-116	SW846 8260B			6/2/11 08:41	DD	A
Toluene-d8 (S)	115		%	76-127	SW846 8260B			6/2/11 08:41	DD	A
1,2-Dichloroethane-d4 (S)	115		%	62-133	SW846 8260B			6/2/11 14:38	MES	A
4-Bromofluorobenzene (S)	88.9		%	79-114	SW846 8260B			6/2/11 14:38	MES	A
Dibromofluoromethane (S)	102		%	78-116	SW846 8260B			6/2/11 14:38	MES	A
Toluene-d8 (S)	120		%	76-127	SW846 8260B			6/2/11 14:38	MES	A
WET CHEMISTRY										
Moisture	50.9		%	0.1	SM20-2540 G			5/26/11 18:15	DLV	B
Total Solids	49.1		%	0.1	SM20-2540 G			5/26/11 18:15	DLV	B
TCLP METALS										
Arsenic, Total	3.0		mg/L	0.20	SW846 6010C	6/1/11	KMK	6/1/11 13:43	MW O	A2
Barium, Total	ND		mg/L	0.25	SW846 6010C	6/1/11	KMK	6/1/11 13:43	MW O	A2
Cadmium, Total	0.052		mg/L	0.050	SW846 6010C	6/1/11	KMK	6/1/11 13:43	MW O	A2
Chromium, Total	ND		mg/L	0.13	SW846 6010C	6/1/11	KMK	6/1/11 13:43	MW O	A2
Lead, Total	9.7		mg/L	0.15	SW846 6010C	6/1/11	KMK	6/1/11 13:43	MW O	A2
Mercury, Total	ND		mg/L	0.010	SW846 7470A	6/1/11	MNP	6/1/11 11:52	MNP	A1
Selenium, Total	1.4		mg/L	0.50	SW846 6010C	6/1/11	KMK	6/1/11 13:43	MW O	A2
Silver, Total	ND		mg/L	0.10	SW846 6010C	6/1/11	KMK	6/1/11 13:43	MW O	A2

D018

203384
85
86
87
88
91

D008
D010

ALS Environmental | Analytical Laboratory Services, Inc.
Now part of the ALS Group

34 Dogwood Lane ▪ Middletown, PA 17057 ▪ Phone: 717-944-5541 ▪ Fax: 717-944-1430 ▪ www.analyticallab.com ▪ www.alsglobal.com

NELAP Certifications: NJ PA010 , NY 11759 , PA 22-293 DoD ELAP: A2LA 0818.01
State Certifications: CT PH-0224 , DE ID 11 , GA 914 , MA PA0102 , MD 128 , LA 04162 , VA 421 , WY EPA Region 8 , WV 343

ANALYTICAL RESULTS

Workorder: 9907013 29-11-HM223644/30-11-HM223645

Lab ID: **9907013002** Date Collected: 5/24/2011 08:00 Matrix: Solid
Sample ID: **30-11-HM223645** Date Received: 5/24/2011 19:05

Parameters	Results	Flag	Units	RDL	Method	Prepared	By	Analyzed	By	Cntr
TCLP LEACHATE										
Final pH	13.00		pH_Units		SW846 1311			5/28/11 10:00	EL	A

Doo 6

Sample Comments:

The percent dry solid per the EPA leaching procedure was less than 0.5%. The sample was filtered to form the leachate.

The GCMS volatiles analysis was performed at a dilution due to the level of target compounds.

Anna G Milliken
Technical Manager

(ALS) Environmental | ANALYTICAL LABORATORY SERVICES, INC.
Now part of the ALS Group
NELAP ACCREDITED TNI LABORATORY

34 Dogwood Lane ▪ Middletown, PA 17057 ▪ Phone: 717-944-5541 ▪ Fax: 717-944-1430 ▪ www.analyticallab.com ▪ www.alsglobal.com

NELAP Certifications: NJ PA010 , NY 11759 , PA 22-293 DoD ELAP: A2LA 0818.01
State Certifications: CT PH-0224 , DE ID 11 , GA 914 , MA PA0102 , MD 128 , LA 04162 , VA 421 , WY EPA Region 8 , WV 343

ANALYTICAL RESULTS

LAST RINSE

Workorder: 9907013 29-11-HM223644/30-11-HM223645

Lab ID: **9907013003** Date Collected: 5/24/2011 08:00 Matrix: Solid
Sample ID: **31-11-HM223651** Date Received: 5/24/2011 19:05

Parameters	Results	Flag	Units	RDL	Method	Prepared	By	Analyzed	By	Cntr
TCLP VOLATILE ORGANICS										
Benzene	27.7		ug/L	20.0	SW846 8260B			6/2/11 14:05	MES	A
2-Butanone	ND		ug/L	200	SW846 8260B			6/2/11 14:05	MES	A
Carbon Tetrachloride	ND		ug/L	20.0	SW846 8260B			6/2/11 14:05	MES	A
Chlorobenzene	ND		ug/L	20.0	SW846 8260B			6/2/11 14:05	MES	A
Chloroform	ND		ug/L	20.0	SW846 8260B			6/2/11 14:05	MES	A
1,2-Dichloroethane	ND		ug/L	20.0	SW846 8260B			6/2/11 14:05	MES	A
1,1-Dichloroethene	ND		ug/L	20.0	SW846 8260B			6/2/11 14:05	MES	A
Tetrachloroethene	ND		ug/L	20.0	SW846 8260B			6/2/11 14:05	MES	A
Trichloroethene	ND		ug/L	20.0	SW846 8260B			6/2/11 14:05	MES	A
Vinyl Chloride	ND		ug/L	20.0	SW846 8260B			6/2/11 14:05	MES	A
Surrogate Recoveries	*Results*	*Flag*	*Units*	*Limits*	*Method*	*Prepared*	*By*	*Analyzed*	*By*	*Cntr*
1,2-Dichloroethane-d4 (S)	116		%	62-133	SW846 8260B			6/2/11 14:05	MES	A
4-Bromofluorobenzene (S)	86.8		%	79-114	SW846 8260B			6/2/11 14:05	MES	A
Dibromofluoromethane (S)	105		%	78-116	SW846 8260B			6/2/11 14:05	MES	A
Toluene-d8 (S)	121		%	76-127	SW846 8260B			6/2/11 14:05	MES	A
WET CHEMISTRY										
Moisture	99.4		%	0.1	SM20-2540 G			5/26/11 18:15	DLV	A
Total Solids	0.6		%	0.1	SM20-2540 G			5/26/11 18:15	DLV	A
TCLP METALS										
Arsenic, Total	2.0	2	mg/L	0.081	SW846 6010C	6/1/11	KMK	6/1/11 13:23	MWO	A2
Barium, Total	ND		mg/L	0.099	SW846 6010C	6/1/11	KMK	6/1/11 13:23	MWO	A2
Cadmium, Total	0.034		mg/L	0.020	SW846 6010C	6/1/11	KMK	6/1/11 13:23	MWO	A2
Chromium, Total	ND		mg/L	0.050	SW846 6010C	6/1/11	KMK	6/1/11 13:23	MWO	A2
Lead, Total	2.1	2	mg/L	0.060	SW846 6010C	6/1/11	KMK	6/1/11 13:23	MWO	A2
Mercury, Total	ND		mg/L	0.010	SW846 7470A	6/1/11	MNP	6/1/11 11:54	MNP	A1
Selenium, Total	2.7	2,3	mg/L	2.0	SW846 6010C	6/1/11	KMK	6/1/11 15:46	MWO	A2
Silver, Total	ND	2	mg/L	0.040	SW846 6010C	6/1/11	KMK	6/1/11 13:23	MWO	A2
TCLP LEACHATE										
Final pH	12.00		pH_Units		SW846 1311			5/28/11 10:00	EL	A

D010

D002

ALS Environmental | Analytical Laboratory Services, Inc.
Now part of the ALS Group

34 Dogwood Lane ▪ Middletown, PA 17057 ▪ Phone: 717-944-5541 ▪ Fax: 717-944-1430 ▪ www.analyticallab.com ▪ www.alsglobal.com

NELAP Certifications: NJ PA010 , NY 11759 , PA 22-293 DoD ELAP: A2LA 0818.01
State Certifications: CT PH-0224 , DE ID 11 , GA 914 , MA PA0102 , MD 128 , LA 04162 , VA 421 , WY EPA Region 8 , WV 343

ANALYTICAL RESULTS

Workorder: 9907013 29-11-HM223644/30-11-HM223645

Lab ID:	9907013003	Date Collected:	5/24/2011 08:00	Matrix:	Solid
Sample ID:	31-11-HM223651	Date Received:	5/24/2011 19:05		

Parameters	Results	Flag	Units	RDL	Method	Prepared	By	Analyzed	By	Cntr

Sample Comments:

The percent dry solid per the EPA leaching procedure was less than 0.5%. The sample was filtered to form the leachate.

Anna G Milliken
Technical Manager

ALS Environmental | Analytical Laboratory Services, Inc.
Now part of the ALS Group

34 Dogwood Lane ▪ Middletown, PA 17057 ▪ Phone: 717-944-5541 ▪ Fax: 717-944-1430 ▪ www.analyticallab.com ▪ www.alsglobal.com

NELAP Certifications: NJ PA010 , NY 11759 , PA 22-293 DoD ELAP: A2LA 0818.01
State Certifications: CT PH-0224 , DE ID 11 , GA 914 , MA PA0102 , MD 128 , LA 04162 , VA 421 , WY EPA Region 8 , WV 343

ANALYTICAL RESULTS QUALIFIERS\FLAGS

Workorder: 9907013 29-11-HM223644/30-11-HM223645

PARAMETER QUALIFIERS\FLAGS

[1] The QC sample type LCS for method SW846 8260B was outside the control limits for the analyte Chloroform. The % Recovery was reported as 77.8 and the control limits were 78 to 122.

[2] The recovery of the Matrix Spike (MS) associated to this analyte was outside of the established control limits. The sample was post-digestion spiked, and this matrix spike was within acceptable recovery limits.

[3] The MS/MSD and post spike recoveries were outside control limits for this analyte. An unknown matrix interference is likely cause for the failures. The sample was diluted until the recovery was within the acceptable range. The detection limits were raised accordingly. MWO 6-1-11

ALS Environmental | Analytical Laboratory Services, Inc.
Now part of the ALS Group
34 Dogwood Lane ▪ Middletown, PA 17057 ▪ Phone: 717-944-5541 ▪ Fax: 717-944-1430 ▪ www.analyticallab.com ▪ www.alsglobal.com

NELAP Certifications: NJ PA010 , NY 11759 , PA 22-293 DoD ELAP: A2LA 0818.01
State Certifications: CT PH-0224 , DE ID 11 , GA 914 , MA PA0102 , MD 128 , LA 04162 , VA 421 , WY EPA Region 8 , WV 343

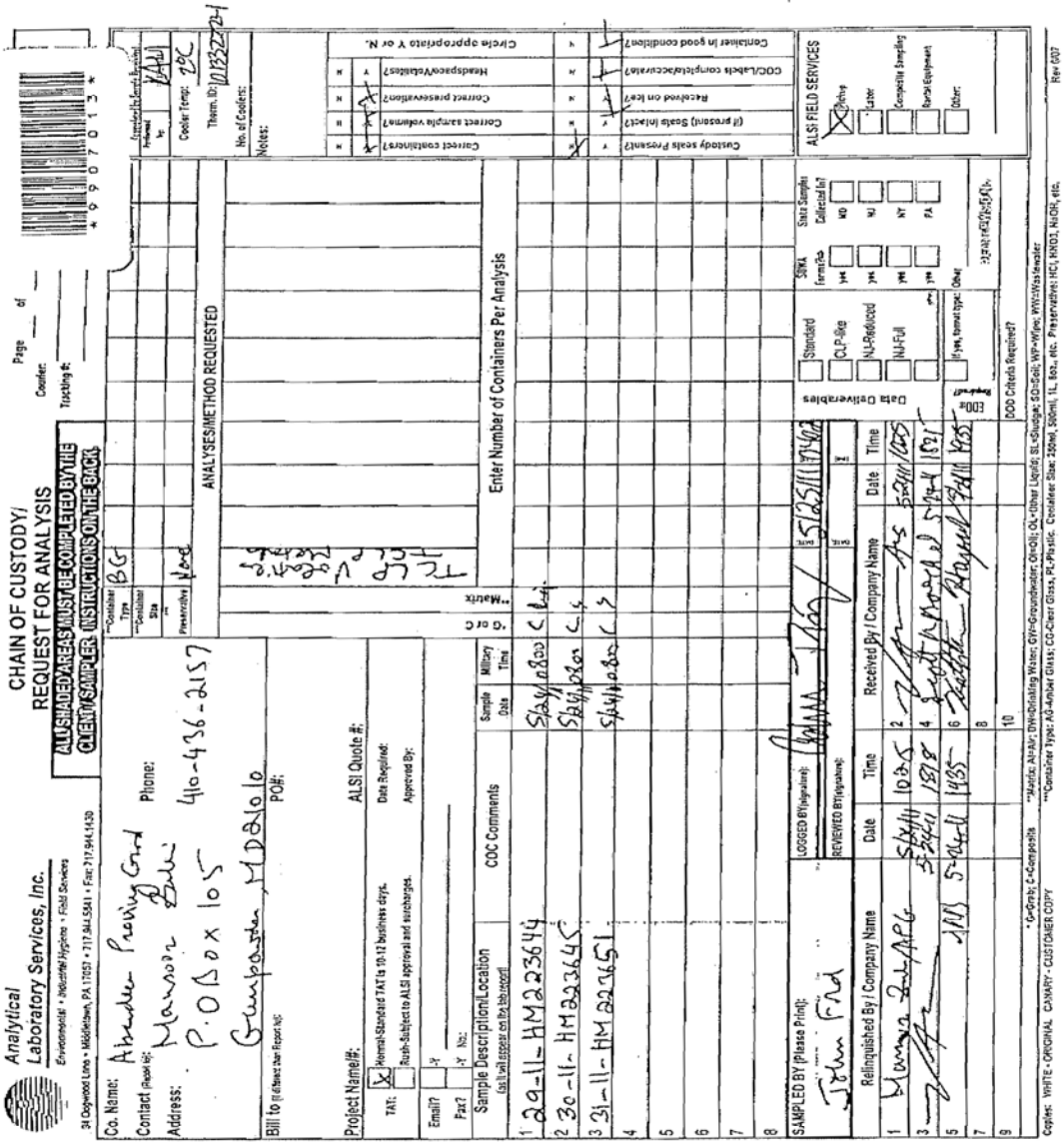

ALS Environmental Laboratory Locations Across North America

Canada: Burlington · Calgary · Centre of Excellence · Edmonton · Fort McMurray · Fort St. John · Grande Prairie · London · Mississauga · Richmond Hill · Saskatoon · Thunder Bay
Vancouver Waterloo · Winnipeg · Yellowknife United States: Cincinnati · Everett · Fort Collins · Holland · Houston · Middletown · Salt Lake City · Spring City · York Mexico: Monterrey

Report ID: 9907013

Page 10 of 10

ALS Environmental | Analytical Laboratory Services, Inc.
Now part of the ALS Group

34 Dogwood Lane ▪ Middletown, PA 17057 ▪ Phone: 717-944-5541 ▪ Fax: 717-944-1430 ▪ www.analyticallab.com ▪ www.alsglobal.com

NELAP Certifications: NJ PA010 , NY 11759 , PA 22-293 DoD ELAP: A2LA 0818.01
State Certifications: CT PH-0224 , DE ID 11 , GA 914 , MA PA0102 , MD 128 , LA 04162 , VA 421 , WY EPA Region 8 , WV 343

June 7, 2011

Mr. Mansoor Zakai
U.S. Army Garrison
AMSSB-GSH-EW
P.O. Box 105
Gunpowder, MD 21010

Certificate of Analysis

Project Name:	**Option YEAR 4 (4/1/09-03/31/10)**	Workorder:	**9907950**
Purchase Order:	**W91ZLK05D0006/DO #7**	Workorder ID:	**35/36/37-11-223660/659/664**

Dear Mr. Zakai,

Enclosed are the analytical results for samples received by the laboratory on Tuesday, May 31, 2011.

The ALS Environmental laboratory in Middletown, Pennsylvania (formerly Analytical Laboratory Services, Inc.) is a National Environmental Laboratory Accreditation Program (NELAP) accredited laboratory and as such, certifies that all applicable test results meet the requirements of NELAP.

If you have any questions regarding this certificate of analysis, please contact Susan Scherer (Project Coordinator) or Anna G Milliken (Technical Manager) at (717) 944-5541.

Please visit us at www.analyticallab.com for a listing of ALS' NELAP accreditations and Scope of Work, as well as other links to Water Quality documentation on the internet.

This laboratory report may not be reproduced, except in full, without the written approval of ALS Environmental.

CC: Mr. Fred Leonard, Ms. Joyce Cimino

This page is included as part of the Analytical Report and must be retained as a permanent record thereof.

Anna G Milliken
Technical Manager

(ALS) Environmental | Analytical Laboratory Services, Inc.
Now part of the ALS Group

34 Dogwood Lane ▪ Middletown, PA 17057 ▪ Phone: 717-944-5541 ▪ Fax: 717-944-1430 ▪ www.analyticallab.com ▪ www.alsglobal.com

NELAP Certifications: NJ PA010 , NY 11759 , PA 22-293 DoD ELAP: A2LA 0818.01
State Certifications: CT PH-0224 , DE ID 11 , GA 914 , MA PA0102 , MD 128 , LA 04162 , VA 421 , WY EPA Region 8 , WV 343

SAMPLE SUMMARY

Workorder: 9907950 35/36/37-11-223660/659/664 Discard Date: 06/28/2011

Lab ID	Sample ID	Matrix	Date Collected	Date Received	Collected By
9907950001	35-11-223660 420 lb.	Waste Water	5/31/11 09:00	5/31/11 19:50	Customer
9907950002	~~36-11-223659~~	Waste Water	5/31/11 09:05	5/31/11 19:50	Customer
~~9907950003~~	~~37-11-223664~~	Waste Water	5/31/11 09:10	5/31/11 19:50	Customer

Workorder Comments:

Notes

- Samples collected by ALS personnel are done so in accordance with the procedures set forth in the ALS Field Sampling Plan (20 - Field Services Sampling Plan).
- All Waste Water analyses comply with methodology requirements of 40 CFR Part 136.
- All Drinking Water analyses comply with methodology requirements of 40 CFR Part 141.
- Unless otherwise noted, all quantitative results for soils are reported on a dry weight basis.
- The Chain of Custody document is included as part of this report.
- All Library Search analytes should be regarded as tentative identifications based on the presumptive evidence of the mass spectra. Concentrations reported are estimated values.

Standard Acronyms/Flags

J, B	Indicates an estimated value between the Method Detection Limit (MDL) and the Practical Quantitation Limit (PQL) for the analyte
U	Indicates that the analyte was Not Detected (ND)
N	Indicates presumptive evidence of the presence of a compound
MDL	Method Detection Limit
PQL	Practical Quantitation Limit
RDL	Reporting Detection Limit
ND	Not Detected - indicates that the analyte was Not Detected at the RDL
Cntr	Analysis was performed using this container
RegLmt	Regulatory Limit
LCS	Laboratory Control Sample
MS	Matrix Spike
MSD	Matrix Spike Duplicate
DUP	Sample Duplicate
%Rec	Percent Recovery
RPD	Relative Percent Difference

221 867 - 380 lb
221868 - 410 lb.
1%
99% Water / Propylene glycol

223662 - 420 lb.
223663 - 290 lb.
223664 - 410 lb.

221864 Propylene glycol 4%
865 water 46%
866 NaOH 4%

ALS Environmental | Analytical Laboratory Services, Inc. Now part of the ALS Group

34 Dogwood Lane ▪ Middletown, PA 17057 ▪ Phone: 717-944-5541 ▪ Fax: 717-944-1430 ▪ www.analyticallab.com ▪ www.alsglobal.com

NELAP Certifications: NJ PA010 , NY 11759 , PA 22-293 DoD ELAP: A2LA 0818.01
State Certifications: CT PH-0224 , DE ID 11 , GA 914 , MA PA0102 , MD 128 , LA 04162 , VA 421 , WY EPA Region 8 , WV 343

ANALYTICAL RESULTS

1180-011

Workorder: 9907950 35/36/37-11-223660/659/664

Lab ID: **9907950001** Date Collected: 5/31/2011 09:00 Matrix: Waste Water
Sample ID: **35-11-223660** Date Received: 5/31/2011 19:50

Parameters	Results	Flag	Units	RDL	Method	Prepared	By	Analyzed	By	Cntr
TCLP VOLATILE ORGANICS										
Benzene	93200		ug/L	2500	SW846 8260B			6/7/11 13:38	MES	A
2-Butanone	ND		ug/L	200	SW846 8260B			6/5/11 06:40	CPK	A
Carbon Tetrachloride	6150		ug/L	500	SW846 8260B			6/6/11 21:20	DJB	A
Chlorobenzene	136		ug/L	20.0	SW846 8260B			6/5/11 06:40	CPK	A
Chloroform	55600		ug/L	500	SW846 8260B			6/6/11 21:20	DJB	A
1,2-Dichloroethane	ND		ug/L	20.0	SW846 8260B			6/5/11 06:40	CPK	A
1,1-Dichloroethene	85.8		ug/L	20.0	SW846 8260B			6/5/11 06:40	CPK	A
Tetrachloroethene	573		ug/L	20.0	SW846 8260B			6/5/11 06:40	CPK	A
Trichloroethene	182		ug/L	20.0	SW846 8260B			6/5/11 06:40	CPK	A
Vinyl Chloride	31.3		ug/L	20.0	SW846 8260B			6/5/11 06:40	CPK	A
Surrogate Recoveries	*Results*	*Flag*	*Units*	*Limits*	*Method*	*Prepared*	*By*	*Analyzed*	*By*	*Cntr*
1,2-Dichloroethane-d4 (S)	111		%	62-133	SW846 8260B			6/5/11 06:40	CPK	A
4-Bromofluorobenzene (S)	89.3		%	79-114	SW846 8260B			6/5/11 06:40	CPK	A
Dibromofluoromethane (S)	96.4		%	78-116	SW846 8260B			6/5/11 06:40	CPK	A
Toluene-d8 (S)	99.9		%	76-127	SW846 8260B			6/5/11 06:40	CPK	A
1,2-Dichloroethane-d4 (S)	113		%	62-133	SW846 8260B			6/6/11 21:20	DJB	A
4-Bromofluorobenzene (S)	93.4		%	79-114	SW846 8260B			6/6/11 21:20	DJB	A
Dibromofluoromethane (S)	98.9		%	78-116	SW846 8260B			6/6/11 21:20	DJB	A
Toluene-d8 (S)	101		%	76-127	SW846 8260B			6/6/11 21:20	DJB	A
1,2-Dichloroethane-d4 (S)	113		%	62-133	SW846 8260B			6/7/11 13:38	MES	A
4-Bromofluorobenzene (S)	101		%	79-114	SW846 8260B			6/7/11 13:38	MES	A
Dibromofluoromethane (S)	107		%	78-116	SW846 8260B			6/7/11 13:38	MES	A
Toluene-d8 (S)	124		%	76-127	SW846 8260B			6/7/11 13:38	MES	A
TCLP METALS										
Arsenic, Total	1.1		mg/L	0.081	SW846 6010C	6/2/11	KMK	6/2/11 15:28	MWO	A1
Barium, Total	ND		mg/L	0.099	SW846 6010C	6/2/11	KMK	6/2/11 15:28	MWO	A1
Cadmium, Total	0.17		mg/L	0.020	SW846 6010C	6/2/11	KMK	6/2/11 15:28	MWO	A1
Chromium, Total	ND		mg/L	0.050	SW846 6010C	6/2/11	KMK	6/2/11 15:28	MWO	A1
Lead, Total	ND		mg/L	0.060	SW846 6010C	6/2/11	KMK	6/2/11 15:28	MWO	A1
Mercury, Total	ND		mg/L	0.0020	SW846 7470A	6/2/11	MNP	6/2/11 11:19	MNP	A2
Selenium, Total	1.7		mg/L	0.20	SW846 6010C	6/2/11	KMK	6/2/11 15:28	MWO	A1
Silver, Total	ND		mg/L	0.040	SW846 6010C	6/2/11	KMK	6/2/11 15:28	MWO	A1

ALS Environmental | Analytical Laboratory Services, Inc.
Now part of the ALS Group

34 Dogwood Lane ▪ Middletown, PA 17057 ▪ Phone: 717-944-5541 ▪ Fax: 717-944-1430 ▪ www.analyticallab.com ▪ www.alsglobal.com

NELAP Certifications: NJ PA010 , NY 11759 , PA 22-293 DoD ELAP: A2LA 0818.01
State Certifications: CT PH-0224 , DE ID 11 , GA 914 , MA PA0102 , MD 128 , LA 04162 , VA 421 , WY EPA Region 8 , WV 343

ANALYTICAL RESULTS

Workorder: 9907950 35/36/37-11-223660/659/664

Lab ID: **9907950001** Date Collected: 5/31/2011 09:00 Matrix: Waste Water
Sample ID: **35-11-223660** Date Received: 5/31/2011 19:50

Parameters	Results	Flag	Units	RDL	Method	Prepared	By	Analyzed	By	Cntr
TCLP LEACHATE										
Final pH	10.35		pH_Units		SW846 1311			6/1/11 08:00	SDL	A

Sample Comments:

The GCMS volatiles analysis was performed at a dilution due to the level of target compounds.

Anna G Milliken
Technical Manager

ALS Environmental | Analytical Laboratory Services, Inc. Now part of the ALS Group

34 Dogwood Lane ▪ Middletown, PA 17057 ▪ Phone: 717-944-5541 ▪ Fax: 717-944-1430 ▪ www.analyticallab.com ▪ www.alsglobal.com

NELAP Certifications: NJ PA010 , NY 11759 , PA 22-293 DoD ELAP: A2LA 0818.01
State Certifications: CT PH-0224 , DE ID 11 , GA 914 , MA PA0102 , MD 128 , LA 04162 , VA 421 , WY EPA Region 8 , WV 343

ANALYTICAL RESULTS

Workorder: 9907950 35/36/37-11-223660/659/664

Lab ID: **9907950002** Date Collected: 5/31/2011 09:05 Matrix: Waste Water

Sample ID: **36-11-223659** Date Received: 5/31/2011 19:50

Parameters	Results	Flag	Units	RDL	Method	Prepared	By	Analyzed	By	Cntr
TCLP VOLATILE ORGANICS										
Benzene	3300000		ug/L	200000	SW846 8260B			6/7/11 16:20	MES	A
2-Butanone	ND		ug/L	1000	SW846 8260B			6/5/11 07:10	CPK	A
Carbon Tetrachloride	129		ug/L	100	SW846 8260B			6/5/11 07:10	CPK	A
Chlorobenzene	1440		ug/L	100	SW846 8260B			6/5/11 07:10	CPK	A
Chloroform	736		ug/L	100	SW846 8260B			6/5/11 07:10	CPK	A
1,2-Dichloroethane	ND		ug/L	100	SW846 8260B			6/5/11 07:10	CPK	A
1,1-Dichloroethene	167		ug/L	100	SW846 8260B			6/5/11 07:10	CPK	A
Tetrachloroethene	3070		ug/L	100	SW846 8260B			6/5/11 07:10	CPK	A
Trichloroethene	884		ug/L	100	SW846 8260B			6/5/11 07:10	CPK	A
Vinyl Chloride	ND		ug/L	100	SW846 8260B			6/5/11 07:10	CPK	A
Surrogate Recoveries	*Results*	*Flag*	*Units*	*Limits*	*Method*	*Prepared*	*By*	*Analyzed*	*By*	*Cntr*
1,2-Dichloroethane-d4 (S)	100		%	62-133	SW846 8260B			6/5/11 07:10	CPK	A
4-Bromofluorobenzene (S)	92		%	79-114	SW846 8260B			6/5/11 07:10	CPK	A
Dibromofluoromethane (S)	87.5		%	78-116	SW846 8260B			6/5/11 07:10	CPK	A
Toluene-d8 (S)	98.9		%	76-127	SW846 8260B			6/5/11 07:10	CPK	A
1,2-Dichloroethane-d4 (S)	112		%	62-133	SW846 8260B			6/7/11 16:20	MES	A
4-Bromofluorobenzene (S)	98.3		%	79-114	SW846 8260B			6/7/11 16:20	MES	A
Dibromofluoromethane (S)	106		%	78-116	SW846 8260B			6/7/11 16:20	MES	A
Toluene-d8 (S)	125		%	76-127	SW846 8260B			6/7/11 16:20	MES	A
TCLP METALS										
Arsenic, Total	2.2		mg/L	0.081	SW846 6010C	6/2/11	KMK	6/2/11 15:32	MWO	A1
Barium, Total	ND		mg/L	0.099	SW846 6010C	6/2/11	KMK	6/2/11 15:32	MWO	A1
Cadmium, Total	0.17		mg/L	0.020	SW846 6010C	6/2/11	KMK	6/2/11 15:32	MWO	A1
Chromium, Total	0.28		mg/L	0.050	SW846 6010C	6/2/11	KMK	6/2/11 15:32	MWO	A1
Lead, Total	3.3		mg/L	0.060	SW846 6010C	6/2/11	KMK	6/2/11 15:32	MWO	A1
Mercury, Total	ND		mg/L	0.010	SW846 7470A	6/2/11	MNP	6/2/11 11:20	MNP	A2
Selenium, Total	2.1		mg/L	0.20	SW846 6010C	6/2/11	KMK	6/2/11 15:32	MWO	A1
Silver, Total	ND		mg/L	0.040	SW846 6010C	6/2/11	KMK	6/2/11 15:32	MWO	A1
TCLP LEACHATE										
Final pH	11.00		pH_Units		SW846 1311			6/1/11 08:00	SDL	A

ALS Environmental | Analytical Laboratory Services, Inc.
Now part of the ALS Group

34 Dogwood Lane ▪ Middletown, PA 17057 ▪ Phone: 717-944-5541 ▪ Fax: 717-944-1430 ▪ www.analyticallab.com ▪ www.alsglobal.com

NELAP Certifications: NJ PA010 , NY 11759 , PA 22-293 DoD ELAP: A2LA 0818.01
State Certifications: CT PH-0224 , DE ID 11 , GA 914 , MA PA0102 , MD 128 , LA 04162 , VA 421 , WY EPA Region 8 , WV 343

ANALYTICAL RESULTS

Workorder: 9907950 35/36/37-11-223660/659/664

Lab ID:	**9907950002**	Date Collected:	5/31/2011 09:05	Matrix:	Waste Water
Sample ID:	**36-11-223659**	Date Received:	5/31/2011 19:50		

Parameters	Results	Flag	Units	RDL	Method	Prepared	By	Analyzed	By	Cntr

Sample Comments:

The GCMS volatiles analysis was performed at a dilution due to the level of target compounds.

Anna G Milliken
Technical Manager

ALS Environmental | Analytical Laboratory Services, Inc. Now part of the ALS Group

34 Dogwood Lane ▪ Middletown, PA 17057 ▪ Phone: 717-944-5541 ▪ Fax: 717-944-1430 ▪ www.analyticallab.com ▪ www.alsglobal.com

NELAP Certifications: NJ PA010 , NY 11759 , PA 22-293 DoD ELAP: A2LA 0818.01
State Certifications: CT PH-0224 , DE ID 11 , GA 914 , MA PA0102 , MD 128 , LA 04162 , VA 421 , WY EPA Region 8 , WV 343

ANALYTICAL RESULTS

Workorder: 9907950 35/36/37-11-223660/659/664

Lab ID: **9907950003** Date Collected: 5/31/2011 09:10 Matrix: Waste Water

Sample ID: **37-11-223664** Date Received: 5/31/2011 19:50

Parameters	Results	Flag	Units	RDL	Method	Prepared	By	Analyzed	By	Cntr
TCLP VOLATILE ORGANICS										
Benzene	394		ug/L	20.0	SW846 8260B			6/5/11 07:40	CPK	A
2-Butanone	ND		ug/L	200	SW846 8260B			6/5/11 07:40	CPK	A
Carbon Tetrachloride	ND		ug/L	20.0	SW846 8260B			6/5/11 07:40	CPK	A
Chlorobenzene	ND		ug/L	20.0	SW846 8260B			6/5/11 07:40	CPK	A
Chloroform	ND		ug/L	20.0	SW846 8260B			6/5/11 07:40	CPK	A
1,2-Dichloroethane	ND		ug/L	20.0	SW846 8260B			6/5/11 07:40	CPK	A
1,1-Dichloroethene	ND		ug/L	20.0	SW846 8260B			6/5/11 07:40	CPK	A
Tetrachloroethene	ND		ug/L	20.0	SW846 8260B			6/5/11 07:40	CPK	A
Trichloroethene	ND		ug/L	20.0	SW846 8260B			6/5/11 07:40	CPK	A
Vinyl Chloride	ND		ug/L	20.0	SW846 8260B			6/5/11 07:40	CPK	A
Surrogate Recoveries	*Results*	*Flag*	*Units*	*Limits*	*Method*	*Prepared*	*By*	*Analyzed*	*By*	*Cntr*
1,2-Dichloroethane-d4 (S)	115		%	62-133	SW846 8260B			6/5/11 07:40	CPK	A
4-Bromofluorobenzene (S)	91.9		%	79-114	SW846 8260B			6/5/11 07:40	CPK	A
Dibromofluoromethane (S)	98.6		%	78-116	SW846 8260B			6/5/11 07:40	CPK	A
Toluene-d8 (S)	98.2		%	76-127	SW846 8260B			6/5/11 07:40	CPK	A
TCLP METALS										
Arsenic, Total	0.12		mg/L	0.081	SW846 6010C	6/2/11	KMK	6/2/11 15:36	MWO	A1
Barium, Total	ND		mg/L	0.099	SW846 6010C	6/2/11	KMK	6/2/11 15:36	MWO	A1
Cadmium, Total	0.095		mg/L	0.020	SW846 6010C	6/2/11	KMK	6/2/11 15:36	MWO	A1
Chromium, Total	ND		mg/L	0.050	SW846 6010C	6/2/11	KMK	6/2/11 15:36	MWO	A1
Lead, Total	ND		mg/L	0.060	SW846 6010C	6/2/11	KMK	6/2/11 15:36	MWO	A1
Mercury, Total	ND		mg/L	0.0020	SW846 7470A	6/2/11	MNP	6/2/11 11:21	MNP	A2
Selenium, Total	ND		mg/L	0.20	SW846 6010C	6/2/11	KMK	6/2/11 15:36	MWO	A1
Silver, Total	ND		mg/L	0.040	SW846 6010C	6/2/11	KMK	6/2/11 15:36	MWO	A1
TCLP LEACHATE										
Final pH	13.00		pH_Units		SW846 1311			6/1/11 08:00	SDL	A

Sample Comments:

ALS Environmental | Analytical Laboratory Services, Inc.
Now part of the ALS Group

34 Dogwood Lane ▪ Middletown, PA 17057 ▪ Phone: 717-944-5541 ▪ Fax: 717-944-1430 ▪ www.analyticallab.com ▪ www.alsglobal.com

NELAP Certifications: NJ PA010 , NY 11759 , PA 22-293 DoD ELAP: A2LA 0818.01
State Certifications: CT PH-0224 , DE ID 11 , GA 914 , MA PA0102 , MD 128 , LA 04162 , VA 421 , WY EPA Region 8 , WV 343

ANALYTICAL RESULTS

Workorder: 9907950 35/36/37-11-223660/659/664

Lab ID:	**9907950003**	Date Collected:	5/31/2011 09:10	Matrix:	Waste Water
Sample ID:	**37-11-223664**	Date Received:	5/31/2011 19:50		

Parameters	Results	Flag	Units	RDL	Method	Prepared	By	Analyzed	By	Cntr

Anna G Milliken
Technical Manager

ALS Environmental | Analytical Laboratory Services, Inc. Now part of the ALS Group

34 Dogwood Lane ■ Middletown, PA 17057 ■ Phone: 717-944-5541 ■ Fax: 717-944-1430 ■ www.analyticallab.com ■ www.alsglobal.com

NELAP Certifications: NJ PA010 , NY 11759 , PA 22-293 DoD ELAP: A2LA 0818.01
State Certifications: CT PH-0224 , DE ID 11 , GA 914 , MA PA0102 , MD 128 , LA 04162 , VA 421 , WY EPA Region 8 , WV 343

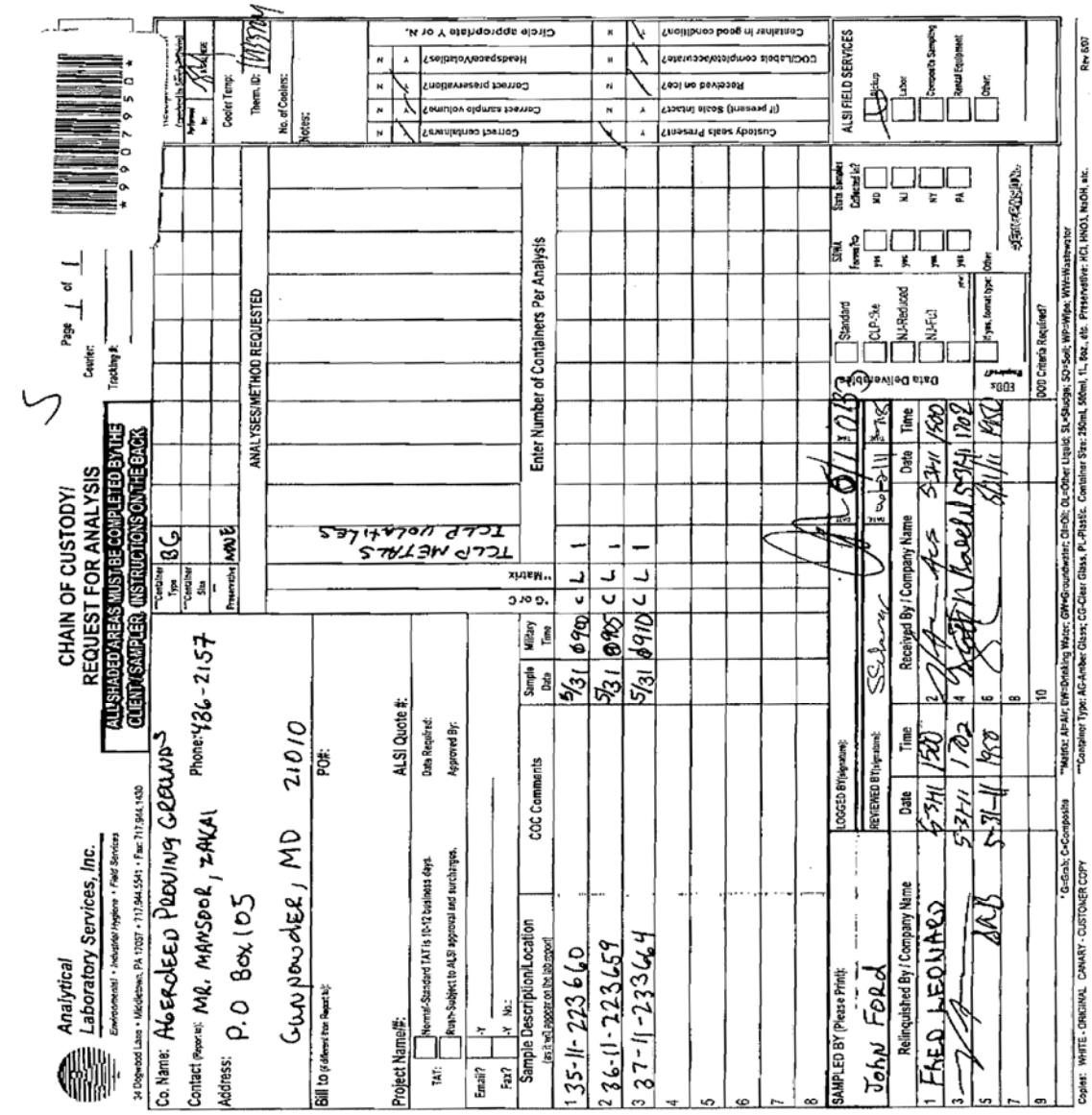

ALS Environmental Laboratory Locations Across North America

Canada: Burlington · Calgary · Centre of Excellence · Edmonton · Fort McMurray · Fort St. John · Grande Prairie · London · Mississauga · Richmond Hill · Saskatoon · Thunder Bay Vancouver Waterloo · Winnipeg · Yellowknife United States: Cincinnati · Everett · Fort Collins · Holland · Houston · Middletown · Salt Lake City · Spring City · York Mexico: Monterrey

ALS Environmental | Analytical Laboratory Services, Inc.
Now part of the ALS Group

34 Dogwood Lane ▪ Middletown, PA 17057 ▪ Phone: 717-944-5541 ▪ Fax: 717-944-1430 ▪ www.analyticallab.com ▪ www.alsglobal.com

NELAP Certifications: NJ PA010 , NY 11759 , PA 22-293 DoD ELAP: A2LA 0818.01
State Certifications: CT PH-0224 , DE ID 11 , GA 914 , MA PA0102 , MD 128 , LA 04162 , VA 421 , WY EPA Region 8 , WV 343

June 14, 2011

Mr. Mansoor Zakai
U.S. Army Garrison
AMSSB-GSH-EW
P.O. Box 105
Gunpowder, MD 21010

Certificate of Analysis

Project Name:	**Option YEAR 4 (4/1/09-03/31/10)**	Workorder:	**9909097**
Purchase Order:	**W91ZLK05D0006/DO #7**	Workorder ID:	**Option YEAR 4 (4/1/09-03/31/10**

Dear Mr. Zakai,

Enclosed are the analytical results for samples received by the laboratory on Tuesday, June 07, 2011.

The ALS Environmental laboratory in Middletown, Pennsylvania (formerly Analytical Laboratory Services, Inc.) is a National Environmental Laboratory Accreditation Program (NELAP) accredited laboratory and as such, certifies that all applicable test results meet the requirements of NELAP.

If you have any questions regarding this certificate of analysis, please contact Susan Scherer (Project Coordinator) or Anna G Milliken (Technical Manager) at (717) 944-5541.

Please visit us at www.analyticallab.com for a listing of ALS' NELAP accreditations and Scope of Work, as well as other links to Water Quality documentation on the internet.

This laboratory report may not be reproduced, except in full, without the written approval of ALS Environmental.

CC: Mr. Fred Leonard, Ms. Joyce Cimino

This page is included as part of the Analytical Report and must be retained as a permanent record thereof.

Anna G Milliken
Technical Manager

ALS Environmental | Analytical Laboratory Services, Inc.
Now part of the ALS Group

34 Dogwood Lane ▪ Middletown, PA 17057 ▪ Phone: 717-944-5541 ▪ Fax: 717-944-1430 ▪ www.analyticallab.com ▪ www.alsglobal.com

NELAP Certifications: NJ PA010 , NY 11759 , PA 22-293 DoD ELAP: A2LA 0818.01
State Certifications: CT PH-0224 , DE ID 11 , GA 914 , MA PA0102 , MD 128 , LA 04162 , VA 421 , WY EPA Region 8 , WV 343

SAMPLE SUMMARY

Workorder: 9909097 Option YEAR 4 (4/1/09-03/31/10 Discard Date: 07/05/2011

Lab ID	Sample ID	Matrix	Date Collected	Date Received	Collected By
9909097001	38-11-223674 ~~268 lb.~~	Water	6/6/11 10:00	6/7/11 20:30	Customer
9909097002	38-11-223670 310 lb.	Water	6/6/11 10:10	6/7/11 20:30	Customer

Workorder Comments:

Notes

- Samples collected by ALS personnel are done so in accordance with the procedures set forth in the ALS Field Sampling Plan (20 - Field Services Sampling Plan).
- All Waste Water analyses comply with methodology requirements of 40 CFR Part 136.
- All Drinking Water analyses comply with methodology requirements of 40 CFR Part 141.
- Unless otherwise noted, all quantitative results for soils are reported on a dry weight basis.
- The Chain of Custody document is included as part of this report.
- All Library Search analytes should be regarded as tentative identifications based on the presumptive evidence of the mass spectra. Concentrations reported are estimated values.

Standard Acronyms/Flags

J, B	Indicates an estimated value between the Method Detection Limit (MDL) and the Practical Quantitation Limit (PQL) for the analyte
U	Indicates that the analyte was Not Detected (ND)
N	Indicates presumptive evidence of the presence of a compound
MDL	Method Detection Limit
PQL	Practical Quantitation Limit
RDL	Reporting Detection Limit
ND	Not Detected - indicates that the analyte was Not Detected at the RDL
Cntr	Analysis was performed using this container
RegLmt	Regulatory Limit
LCS	Laboratory Control Sample
MS	Matrix Spike
MSD	Matrix Spike Duplicate
DUP	Sample Duplicate
%Rec	Percent Recovery
RPD	Relative Percent Difference

223673 - 265 lb.
223672 - 400 lb.
223671 - 400 lb.
~~223670~~

ALS Environmental | Analytical Laboratory Services, Inc. Now part of the ALS Group

34 Dogwood Lane ▪ Middletown, PA 17057 ▪ Phone: 717-944-5541 ▪ Fax: 717-944-1430 ▪ www.analyticallab.com ▪ www.alsglobal.com

NELAP Certifications: NJ PA010 , NY 11759 , PA 22-293 DoD ELAP: A2LA 0818.01
State Certifications: CT PH-0224 , DE ID 11 , GA 914 , MA PA0102 , MD 128 , LA 04162 , VA 421 , WY EPA Region 8 , WV 343

ANALYTICAL RESULTS

Workorder: 9909097 Option YEAR 4 (4/1/09-03/31/10

1180-609

Lab ID: **9909097001** Date Collected: 6/6/2011 10:00 Matrix: Water

Sample ID: **38-11-223674** Date Received: 6/7/2011 20:30

Parameters	Results	Flag	Units	RDL	Method	Prepared	By	Analyzed	By	Cntr
TCLP VOLATILE ORGANICS										
Benzene	759000		ug/L	50000	SW846 8260B			6/14/11 08:32	MES	A
2-Butanone	ND		ug/L	50000	SW846 8260B			6/12/11 04:24	MES	A
Carbon Tetrachloride	134000		ug/L	5000	SW846 8260B			6/12/11 04:24	MES	A
Chlorobenzene	40100		ug/L	5000	SW846 8260B			6/12/11 04:24	MES	A
Chloroform	27100		ug/L	5000	SW846 8260B			6/12/11 04:24	MES	A
1,2-Dichloroethane	ND		ug/L	5000	SW846 8260B			6/12/11 04:24	MES	A
1,1-Dichloroethene	ND		ug/L	5000	SW846 8260B			6/12/11 04:24	MES	A
Tetrachloroethene	56000		ug/L	5000	SW846 8260B			6/12/11 04:24	MES	A
Trichloroethene	6850		ug/L	5000	SW846 8260B			6/12/11 04:24	MES	A
Vinyl Chloride	ND		ug/L	5000	SW846 8260B			6/12/11 04:24	MES	A
Surrogate Recoveries	*Results*	*Flag*	*Units*	*Limits*	*Method*	*Prepared*	*By*	*Analyzed*	*By*	*Cntr*
1,2-Dichloroethane-d4 (S)	116		%	62-133	SW846 8260B			6/12/11 04:24	MES	A
4-Bromofluorobenzene (S)	101		%	79-114	SW846 8260B			6/12/11 04:24	MES	A
Dibromofluoromethane (S)	106		%	78-116	SW846 8260B			6/12/11 04:24	MES	A
Toluene-d8 (S)	133	1	%	76-127	SW846 8260B			6/12/11 04:24	MES	A
1,2-Dichloroethane-d4 (S)	86.9		%	62-133	SW846 8260B			6/14/11 08:32	MES	A
4-Bromofluorobenzene (S)	82		%	79-114	SW846 8260B			6/14/11 08:32	MES	A
Dibromofluoromethane (S)	85.1		%	78-116	SW846 8260B			6/14/11 08:32	MES	A
Toluene-d8 (S)	86.9		%	76-127	SW846 8260B			6/14/11 08:32	MES	A
TCLP METALS										
Arsenic, Total	1.1		mg/L	0.027	SW846 6010C	6/13/11	SRT	6/14/11 10:22	MWO	A1
Barium, Total	ND		mg/L	0.033	SW846 6010C	6/13/11	SRT	6/14/11 10:22	MWO	A1
Cadmium, Total	ND		mg/L	0.0066	SW846 6010C	6/13/11	SRT	6/14/11 10:22	MWO	A1
Chromium, Total	ND		mg/L	0.017	SW846 6010C	6/13/11	SRT	6/14/11 10:22	MWO	A1
Lead, Total	0.43		mg/L	0.020	SW846 6010C	6/13/11	SRT	6/14/11 10:22	MWO	A1
Mercury, Total	ND		mg/L	0.0020	SW846 7470A	6/13/11	MNP	6/13/11 11:27	MNP	A2
Selenium, Total	1.9		mg/L	0.066	SW846 6010C	6/13/11	SRT	6/14/11 10:22	MWO	A1
Silver, Total	ND		mg/L	0.013	SW846 6010C	6/13/11	SRT	6/14/11 10:22	MWO	A1
TCLP LEACHATE										
Final pH	13.00		pH_Units		SW846 1311			6/11/11 00:00	EL	A

ALS Environmental | Analytical Laboratory Services, Inc.
Now part of the ALS Group

34 Dogwood Lane ■ Middletown, PA 17057 ■ Phone: 717-944-5541 ■ Fax: 717-944-1430 ■ www.analyticallab.com ■ www.alsglobal.com

NELAP Certifications: NJ PA010 , NY 11759 , PA 22-293 DoD ELAP: A2LA 0818.01
State Certifications: CT PH-0224 , DE ID 11 , GA 914 , MA PA0102 , MD 128 , LA 04162 , VA 421 , WY EPA Region 8 , WV 343

ANALYTICAL RESULTS

Workorder: 9909097 Option YEAR 4 (4/1/09-03/31/10

Lab ID:	**9909097001**	Date Collected:	6/6/2011 10:00	Matrix:	Water
Sample ID:	**38-11-223674**	Date Received:	6/7/2011 20:30		

Parameters	Results	Flag	Units	RDL	Method	Prepared	By	Analyzed	By	Cntr

Sample Comments:

The percent dry solid per the EPA leaching procedure was less than 0.5%. The sample was filtered to form the leachate.

The GCMS volatiles analysis was performed at a dilution due to the level of target compounds.

Anna G Milliken
Technical Manager

ALS Environmental | Analytical Laboratory Services, Inc. Now part of the ALS Group

34 Dogwood Lane ▪ Middletown, PA 17057 ▪ Phone: 717-944-5541 ▪ Fax: 717-944-1430 ▪ www.analyticallab.com ▪ www.alsglobal.com

NELAP Certifications: NJ PA010 , NY 11759 , PA 22-293 DoD ELAP: A2LA 0818.01
State Certifications: CT PH-0224 , DE ID 11 , GA 914 , MA PA0102 , MD 128 , LA 04162 , VA 421 , WY EPA Region 8 , WV 343

ANALYTICAL RESULTS

1180-010

Workorder: 9909097 Option YEAR 4 (4/1/09-03/31/10

Lab ID: **9909097002** Date Collected: 6/6/2011 10:10 Matrix: Water

Sample ID: **38-11-223670** Date Received: 6/7/2011 20:30

Parameters	Results	Flag	Units	RDL	Method	Prepared	By	Analyzed	By	Cntr
TCLP VOLATILE ORGANICS										
Benzene	972000		ug/L	5000	SW846 8260B			6/12/11 04:57	MES	A
2-Butanone	ND		ug/L	50000	SW846 8260B			6/12/11 04:57	MES	A
Carbon Tetrachloride	192000		ug/L	5000	SW846 8260B			6/12/11 04:57	MES	A
Chlorobenzene	~~8000~~ ND		ug/L	5000	SW846 8260B			6/12/11 04:57	MES	A
Chloroform	171000		ug/L	5000	SW846 8260B			6/12/11 04:57	MES	A
1,2-Dichloroethane	ND		ug/L	5000	SW846 8260B			6/12/11 04:57	MES	A
1,1-Dichloroethene	ND		ug/L	5000	SW846 8260B			6/12/11 04:57	MES	A
Tetrachloroethene	10400		ug/L	5000	SW846 8260B			6/12/11 04:57	MES	A
Trichloroethene	ND		ug/L	5000	SW846 8260B			6/12/11 04:57	MES	A
Vinyl Chloride	ND		ug/L	5000	SW846 8260B			6/12/11 04:57	MES	A
Surrogate Recoveries	*Results*	*Flag*	*Units*	*Limits*	*Method*	*Prepared*	*By*	*Analyzed*	*By*	*Cntr*
1,2-Dichloroethane-d4 (S)	116		%	62-133	SW846 8260B			6/12/11 04:57	MES	A
4-Bromofluorobenzene (S)	102		%	79-114	SW846 8260B			6/12/11 04:57	MES	A
Dibromofluoromethane (S)	106		%	78-116	SW846 8260B			6/12/11 04:57	MES	A
Toluene-d8 (S)	128	3	%	76-127	SW846 8260B			6/12/11 04:57	MES	A
TCLP METALS										
Arsenic, Total	1.4		mg/L	0.041	SW846 6010C	6/13/11	SRT	6/14/11 10:26	MWO	A1
Barium, Total	0.057		mg/L	0.050	SW846 6010C	6/13/11	SRT	6/14/11 10:26	MWO	A1
Cadmium, Total	0.041		mg/L	0.0099	SW846 6010C	6/13/11	SRT	6/14/11 10:26	MWO	A1
Chromium, Total	1.4		mg/L	0.025	SW846 6010C	6/13/11	SRT	6/14/11 10:26	MWO	A1
Lead, Total	9.1		mg/L	0.030	SW846 6010C	6/13/11	SRT	6/14/11 10:26	MWO	A1
Mercury, Total	ND		mg/L	0.020	SW846 7470A	6/13/11	MNP	6/13/11 11:28	MNP	A2
Selenium, Total	1.5		mg/L	0.099	SW846 6010C	6/13/11	SRT	6/14/11 10:26	MWO	A1
Silver, Total	ND	2	mg/L	0.030	SW846 6010C	6/13/11	SRT	6/14/11 10:44	MWO	A1
TCLP LEACHATE										
Final pH	13.00		pH_Units		SW846 1311			6/11/11 00:00	EL	A

Sample Comments:

The percent dry solid per the EPA leaching procedure was less than 0.5%. The sample was filtered to form the leachate.

ALS Environmental | Analytical Laboratory Services, Inc.
Now part of the ALS Group

34 Dogwood Lane ▪ Middletown, PA 17057 ▪ Phone: 717-944-5541 ▪ Fax: 717-944-1430 ▪ www.analyticallab.com ▪ www.alsglobal.com

NELAP Certifications: NJ PA010 , NY 11759 , PA 22-293 DoD ELAP: A2LA 0818.01
State Certifications: CT PH-0224 , DE ID 11 , GA 914 , MA PA0102 , MD 128 , LA 04162 , VA 421 , WY EPA Region 8 , WV 343

ANALYTICAL RESULTS

Workorder: 9909097 Option YEAR 4 (4/1/09-03/31/10

Lab ID:	**9909097002**	Date Collected:	6/6/2011 10:10	Matrix:	Water
Sample ID:	**38-11-223670**	Date Received:	6/7/2011 20:30		

Parameters	Results	Flag	Units	RDL	Method	Prepared	By	Analyzed	By	Cntr

The GCMS volatiles analysis was performed at a dilution due to the level of target compounds.

Anna G Milliken
Technical Manager

ALS Environmental | Analytical Laboratory Services, Inc.
Now part of the ALS Group

34 Dogwood Lane ▪ Middletown, PA 17057 ▪ Phone: 717-944-5541 ▪ Fax: 717-944-1430 ▪ www.analyticallab.com ▪ www.alsglobal.com

NELAP Certifications: NJ PA010 , NY 11759 , PA 22-293 DoD ELAP: A2LA 0818.01
State Certifications: CT PH-0224 , DE ID 11 , GA 914 , MA PA0102 , MD 128 , LA 04162 , VA 421 , WY EPA Region 8 , WV 343

ANALYTICAL RESULTS QUALIFIERS\FLAGS

Workorder: 9909097 Option YEAR 4 (4/1/09-03/31/10

PARAMETER QUALIFIERS\FLAGS

[1] The surrogate Toluene-d8 for method SW846 8260B was outside of control limits. The % Recovery was reported as 133 and the control limits were 76 to 127. This result was reported at a dilution of 5000.

[2] The internal standard for the metals analysis was recovered at <70% due to sample matrix interference. The sample was diluted until the internal standard was within the required range. The detection limits were raised. MWO 6-14-11

[3] The surrogate Toluene-d8 for method SW846 8260B was outside of control limits. The % Recovery was reported as 128 and the control limits were 76 to 127. This result was reported at a dilution of 5000.

ALS Environmental | ANALYTICAL LABORATORY SERVICES, INC. Now part of the ALS Group | NELAP ACCREDITED TNI LABORATORY

34 Dogwood Lane ▪ Middletown, PA 17057 ▪ Phone: 717-944-5541 ▪ Fax: 717-944-1430 ▪ www.analyticallab.com ▪ www.alsglobal.com

NELAP Certifications: NJ PA010 , NY 11759 , PA 22-293 DoD ELAP: A2LA 0818.01
State Certifications: CT PH-0224 , DE ID 11 , GA 914 , MA PA0102 , MD 128 , LA 04162 , VA 421 , WY EPA Region 8 , WV 343

Analytical Laboratory Services, Inc.
Environmental • Industrial Hygiene • Field Services
34 Dogwood Lane • Middletown, PA 17057 • 717.944.5541 • Fax: 717.944.1430

CHAIN OF CUSTODY/ REQUEST FOR ANALYSIS
ALL SHADED AREAS MUST BE COMPLETED BY THE CLIENT/SAMPLER (INSTRUCTIONS ON THE BACK)

Page 1 of 1
Cooler:
Tracking #:

Co. Name: ABERDEEN PROVING GROUNDS
Contact (Report to): MR. MANSOOR ZAKAM Phone: 436-2157
Address: P.O BOX 105
ABERDEEN PROVING GROUNDS, MD 21010
Bill to (if different than Report to):
PO#:
ALSI Quote #:
Project Name/#:
TAT: Normal-Standard TAT is 10-12 business days. Rush-Subject to ALS approval and surcharges. Date Required: Approved By:
Email? Y
Fax? Y No:

	Sample Description/Location (as it will appear on the lab report)	Sample Date	Military Time	Matrix (Gorc)	Container Type	Container Size	Preservative	COC Comments	TCLP METALS	TCLP Volatiles	Enter Number of Containers Per Analysis
1	38-11-223674	6/6	1000	C	L	1					
2	39-11-223670	6/6	10/10	C	L	1					
3											
4											
5											
6											
7											
8											

ANALYSES/METHOD REQUESTED

Receipt Information (Internal ALS Section): Received by: Date: Time: Cooler Temp: Therm. ID: No. of Coolers: Notes:

Circle appropriate Y or N.		
Custody seals Present?	Y	N
(If present) Seals Intact?	Y	N
Received on Ice?	Y	N
COC Labels complete/accurate?	Y	N
Container in good condition?	Y	N
Correct containers?	Y	N
Correct sample volume?	Y	N
Correct preservation?	Y	N
Headspace/Volatiles?	Y	N

LOGGED BY (Signature): Date: Time:
REVIEWED BY (Signature): Date: Time:

SAMPLED BY (Please Print): JOHN FORD

	Relinquished By / Company Name	Date	Time	Received By / Company Name	Date	Time
1	FRED LEONARD	6-7-11	1625	[illegible]	6-7-11	1625
2				[illegible]	6-7-11	1800
3				[illegible]	6-7-11	1800
4				[illegible]	6-7-11	1800
5	JOHN FORD	6-7-11	2000	[illegible]	6/7/11	2000
6						
7						
8						
9						
10						

ALSI FIELD SERVICES: Pickup, Labor, Composite Sampling, Rental Equipment, Other:

Data Deliverables: Standard, CLP-Like, NJ-Reduced, NJ-Full, Form I, Format Type: Other
SDWA Format To: yes, yes, yes, yes
State Samples Collected In?: MD, NJ, NY, PA
EDDs: Electronic Format
DOD Criteria Required?

* Cu-Grab; Co-Composite
** Matrix: AirAir; DW=Drinking Water; GW=Groundwater; OilOil; OL=Other Liquid; SL=Sludge; SO=Soil; WP=Wipe; WW=Wastewater
*** Container Type: AG-Amber Glass; CG-Clear Glass; PL-Plastic. Container Size: 250ml, 500ml, 1L, 8oz, etc. Preservative: HCl, HNO3, NaOH, etc.

Copies: WHITE - ORIGINAL CANARY - CUSTOMER COPY
Rev 007

ALS Environmental | Analytical Laboratory Services, Inc.
Now part of the ALS Group

34 Dogwood Lane ▪ Middletown, PA 17057 ▪ Phone: 717-944-5541 ▪ Fax: 717-944-1430 ▪ www.analyticallab.com ▪ www.alsglobal.com

NELAP Certifications: NJ PA010 , NY 11759 , PA 22-293 DoD ELAP: A2LA 0818.01
State Certifications: CT PH-0224 , DE ID 11 , GA 914 , MA PA0102 , MD 128 , LA 04162 , VA 421 , WY EPA Region 8 , WV 343

June 22, 2011

Mr. Fred Leonard
U.S. Army Garrison
AMSSB-GSH-EW
P.O. Box 105
Gunpowder, MD 21010

Certificate of Analysis

Project Name:	**Option YEAR 4 (4/1/09-03/31/10)**	Workorder:	**9910453**
Purchase Order:	**W91ZLK05D0006/DO #7**	Workorder ID:	**47-11-223689, 48-11-223692-693**

Dear Mr. Leonard,

Enclosed are the analytical results for samples received by the laboratory on Tuesday, June 14, 2011.

The ALS Environmental laboratory in Middletown, Pennsylvania (formerly Analytical Laboratory Services, Inc.) is a National Environmental Laboratory Accreditation Program (NELAP) accredited laboratory and as such, certifies that all applicable test results meet the requirements of NELAP.

If you have any questions regarding this certificate of analysis, please contact Susan Scherer (Project Coordinator) or Anna G Milliken (Technical Manager) at (717) 944-5541.

Please visit us at www.analyticallab.com for a listing of ALS' NELAP accreditations and Scope of Work, as well as other links to Water Quality documentation on the internet.

This laboratory report may not be reproduced, except in full, without the written approval of ALS Environmental.

CC: Ms. Joyce Cimino, Mr. Mansoor Zakai

This page is included as part of the Analytical Report and must be retained as a permanent record thereof.

Anna G Milliken
Technical Manager

ALS Environmental | Analytical Laboratory Services, Inc.
Now part of the ALS Group

34 Dogwood Lane ▪ Middletown, PA 17057 ▪ Phone: 717-944-5541 ▪ Fax: 717-944-1430 ▪ www.analyticallab.com ▪ www.alsglobal.com

NELAP Certifications: NJ PA010 , NY 11759 , PA 22-293 DoD ELAP: A2LA 0818.01
State Certifications: CT PH-0224 , DE ID 11 , GA 914 , MA PA0102 , MD 128 , LA 04162 , VA 421 , WY EPA Region 8 , WV 343

SAMPLE SUMMARY

Workorder: 9910453 47-11-223689, 48-11-223692-693 Discard Date: 07/13/2011

Lab ID	Sample ID	Matrix	Date Collected	Date Received	Collected By
9910453001	47-11-223689 ✓	Liquid Waste	6/14/11 09:00	6/14/11 19:55	Customer
9910453002	48-11-223692-693 ✓ 90|91	Liquid Waste	6/14/11 09:05	6/14/11 19:55	Customer

Workorder Comments:

Notes

- -- Samples collected by ALS personnel are done so in accordance with the procedures set forth in the ALS Field Sampling Plan (20 - Field Services Sampling Plan).
- -- All Waste Water analyses comply with methodology requirements of 40 CFR Part 136.
- -- All Drinking Water analyses comply with methodology requirements of 40 CFR Part 141.
- -- Unless otherwise noted, all quantitative results for soils are reported on a dry weight basis.
- -- The Chain of Custody document is included as part of this report.
- -- All Library Search analytes should be regarded as tentative identifications based on the presumptive evidence of the mass spectra. Concentrations reported are estimated values.

Standard Acronyms/Flags

J, B	Indicates an estimated value between the Method Detection Limit (MDL) and the Practical Quantitation Limit (PQL) for the analyte
U	Indicates that the analyte was Not Detected (ND)
N	Indicates presumptive evidence of the presence of a compound
MDL	Method Detection Limit
PQL	Practical Quantitation Limit
RDL	Reporting Detection Limit
ND	Not Detected - indicates that the analyte was Not Detected at the RDL
Cntr	Analysis was performed using this container
RegLmt	Regulatory Limit
LCS	Laboratory Control Sample
MS	Matrix Spike
MSD	Matrix Spike Duplicate
DUP	Sample Duplicate
%Rec	Percent Recovery
RPD	Relative Percent Difference

689 305
690 ~~350~~ 400
691 400 lb
692 365 lb
693 300 lb

ALS Environmental | Analytical Laboratory Services, Inc. Now part of the ALS Group

34 Dogwood Lane ▪ Middletown, PA 17057 ▪ Phone: 717-944-5541 ▪ Fax: 717-944-1430 ▪ www.analyticallab.com ▪ www.alsglobal.com

NELAP Certifications: NJ PA010 , NY 11759 , PA 22-293 DoD ELAP: A2LA 0818.01
State Certifications: CT PH-0224 , DE ID 11 , GA 914 , MA PA0102 , MD 128 , LA 04162 , VA 421 , WY EPA Region 8 , WV 343

ANALYTICAL RESULTS

Workorder: 9910453 47-11-223689, 48-11-223692-693

Lab ID: **9910453001** Date Collected: 6/14/2011 09:00 Matrix: Liquid Waste

Sample ID: **47-11-223689** Date Received: 6/14/2011 19:55

Parameters	Results	Flag	Units	RDL	Method	Prepared	By	Analyzed	By	Cntr
TCLP VOLATILE ORGANICS										
Benzene	449000		ug/L	5000	SW846 8260B			6/20/11 17:25	MES	A
2-Butanone	ND		ug/L	50000	SW846 8260B			6/20/11 17:25	MES	A
Carbon Tetrachloride	ND		ug/L	5000	SW846 8260B			6/20/11 17:25	MES	A
Chlorobenzene	ND		ug/L	5000	SW846 8260B			6/20/11 17:25	MES	A
Chloroform	47600		ug/L	5000	SW846 8260B			6/20/11 17:25	MES	A
1,2-Dichloroethane	ND		ug/L	5000	SW846 8260B			6/20/11 17:25	MES	A
1,1-Dichloroethene	ND		ug/L	5000	SW846 8260B			6/20/11 17:25	MES	A
Tetrachloroethene	ND		ug/L	5000	SW846 8260B			6/20/11 17:25	MES	A
Trichloroethene	ND		ug/L	5000	SW846 8260B			6/20/11 17:25	MES	A
Vinyl Chloride	ND		ug/L	5000	SW846 8260B			6/20/11 17:25	MES	A
Surrogate Recoveries	*Results*	*Flag*	*Units*	*Limits*	*Method*	*Prepared*	*By*	*Analyzed*	*By*	*Cntr*
1,2-Dichloroethane-d4 (S)	91.8		%	62-133	SW846 8260B			6/20/11 17:25	MES	A
4-Bromofluorobenzene (S)	103		%	79-114	SW846 8260B			6/20/11 17:25	MES	A
Dibromofluoromethane (S)	93.1		%	78-116	SW846 8260B			6/20/11 17:25	MES	A
Toluene-d8 (S)	99.6		%	76-127	SW846 8260B			6/20/11 17:25	MES	A
TCLP METALS										
Arsenic, Total	0.048		mg/L	0.018	SW846 6010C	6/16/11	MNP	6/21/11 17:20	JWK	A1
Barium, Total	0.16		mg/L	0.022	SW846 6010C	6/16/11	MNP	6/21/11 17:20	JWK	A1
Cadmium, Total	0.044		mg/L	0.0044	SW846 6010C	6/16/11	MNP	6/21/11 17:20	JWK	A1
Chromium, Total	ND		mg/L	0.011	SW846 6010C	6/16/11	MNP	6/21/11 17:20	JWK	A1
Lead, Total	ND		mg/L	0.013	SW846 6010C	6/16/11	MNP	6/21/11 17:20	JWK	A1
Mercury, Total	ND	1	mg/L	0.0050	SW846 7470A	6/16/11	MNP	6/16/11 13:10	MNP	A2
Selenium, Total	0.080		mg/L	0.044	SW846 6010C	6/16/11	MNP	6/21/11 17:20	JWK	A1
Silver, Total	ND		mg/L	0.0089	SW846 6010C	6/16/11	MNP	6/21/11 17:20	JWK	A1
TCLP LEACHATE										
Extraction Fluid Used	2				SW846 1311			6/15/11 10:00	SDL	A
Final pH	6.14		pH_Units		SW846 1311			6/15/11 10:00	SDL	A
Preliminary pH after DI water	13.11		pH_Units		SW846 1311			6/15/11 10:00	SDL	A
Preliminary pH after HCl	11.90		pH_Units		SW846 1311			6/15/11 10:00	SDL	A

Sample Comments:

The GCMS volatiles analysis was performed at a dilution due to the level of target compounds.

1179-001

ALS Environmental | Analytical Laboratory Services, Inc.
Now part of the ALS Group

34 Dogwood Lane ▪ Middletown, PA 17057 ▪ Phone: 717-944-5541 ▪ Fax: 717-944-1430 ▪ www.analyticallab.com ▪ www.alsglobal.com

NELAP Certifications: NJ PA010 , NY 11759 , PA 22-293 DoD ELAP: A2LA 0818.01
State Certifications: CT PH-0224 , DE ID 11 , GA 914 , MA PA0102 , MD 128 , LA 04162 , VA 421 , WY EPA Region 8 , WV 343

ANALYTICAL RESULTS

Workorder: 9910453 47-11-223689, 48-11-223692-693

Lab ID:	**9910453001**	Date Collected:	6/14/2011 09:00	Matrix:	Liquid Waste
Sample ID:	**47-11-223689**	Date Received:	6/14/2011 19:55		

Parameters	Results	Flag	Units	RDL	Method	Prepared	By	Analyzed	By	Cntr

Anna G Milliken
Technical Manager

ALS Environmental | Analytical Laboratory Services, Inc. Now part of the ALS Group

34 Dogwood Lane ▪ Middletown, PA 17057 ▪ Phone: 717-944-5541 ▪ Fax: 717-944-1430 ▪ www.analyticallab.com ▪ www.alsglobal.com

NELAP Certifications: NJ PA010 , NY 11759 , PA 22-293 DoD ELAP: A2LA 0818.01
State Certifications: CT PH-0224 , DE ID 11 , GA 914 , MA PA0102 , MD 128 , LA 04162 , VA 421 , WY EPA Region 8 , WV 343

ANALYTICAL RESULTS

11179-003

Workorder: 9910453 47-11-223689, 48-11-223692-693

Lab ID: **9910453002** Date Collected: 6/14/2011 09:05 Matrix: Liquid Waste

Sample ID: **48-11-223692-693** Date Received: 6/14/2011 19:55

Parameters	Results	Flag	Units	RDL	Method	Prepared	By	Analyzed	By	Cntr
TCLP VOLATILE ORGANICS										
Benzene	594000		ug/L	10000	SW846 8260B			6/21/11 12:43	MES	A
2-Butanone	ND		ug/L	10000	SW846 8260B			6/17/11 22:38	DJB	A
Carbon Tetrachloride	40000		ug/L	1000	SW846 8260B			6/17/11 22:38	DJB	A
Chlorobenzene	ND		ug/L	1000	SW846 8260B			6/17/11 22:38	DJB	A
Chloroform	246000		ug/L	1000	SW846 8260B			6/17/11 22:38	DJB	A
1,2-Dichloroethane	ND		ug/L	1000	SW846 8260B			6/17/11 22:38	DJB	A
1,1-Dichloroethene	ND		ug/L	1000	SW846 8260B			6/17/11 22:38	DJB	A
Tetrachloroethene	1940		ug/L	1000	SW846 8260B			6/17/11 22:38	DJB	A
Trichloroethene	ND		ug/L	1000	SW846 8260B			6/17/11 22:38	DJB	A
Vinyl Chloride	ND		ug/L	1000	SW846 8260B			6/17/11 22:38	DJB	A
Surrogate Recoveries	*Results*	*Flag*	*Units*	*Limits*	*Method*	*Prepared*	*By*	*Analyzed*	*By*	*Cntr*
1,2-Dichloroethane-d4 (S)	90.4		%	62-133	SW846 8260B			6/17/11 22:38	DJB	A
4-Bromofluorobenzene (S)	103		%	79-114	SW846 8260B			6/17/11 22:38	DJB	A
Dibromofluoromethane (S)	93		%	78-116	SW846 8260B			6/17/11 22:38	DJB	A
Toluene-d8 (S)	101		%	76-127	SW846 8260B			6/17/11 22:38	DJB	A
1,2-Dichloroethane-d4 (S)	93.6		%	62-133	SW846 8260B			6/21/11 12:43	MES	A
4-Bromofluorobenzene (S)	102		%	79-114	SW846 8260B			6/21/11 12:43	MES	A
Dibromofluoromethane (S)	94.6		%	78-116	SW846 8260B			6/21/11 12:43	MES	A
Toluene-d8 (S)	99.5		%	76-127	SW846 8260B			6/21/11 12:43	MES	A
TCLP METALS										
Arsenic, Total	1.1		mg/L	0.081	SW846 6010C	6/16/11	MNP	6/21/11 17:33	JWK	A1
Barium, Total	0.13		mg/L	0.099	SW846 6010C	6/16/11	MNP	6/21/11 17:33	JWK	A1
Cadmium, Total	ND		mg/L	0.020	SW846 6010C	6/16/11	MNP	6/21/11 17:33	JWK	A1
Chromium, Total	ND		mg/L	0.050	SW846 6010C	6/16/11	MNP	6/21/11 17:33	JWK	A1
Lead, Total	ND		mg/L	0.060	SW846 6010C	6/16/11	MNP	6/21/11 17:33	JWK	A1
Mercury, Total	ND		mg/L	0.010	SW846 7470A	6/16/11	MNP	6/16/11 13:14	MNP	A2
Selenium, Total	1.8		mg/L	0.20	SW846 6010C	6/16/11	MNP	6/21/11 17:33	JWK	A1
Silver, Total	ND		mg/L	0.040	SW846 6010C	6/16/11	MNP	6/21/11 17:33	JWK	A1
TCLP LEACHATE										
Final pH	10.00		pH_Units		SW846 1311			6/16/11 11:15	SDL	A

Sample Comments:

The percent dry solid per the EPA leaching procedure was less than 0.5%. The sample was filtered to form the leachate.

The GCMS volatiles analysis was performed at a dilution due to the level of target compounds.

ALS Environmental | Analytical Laboratory Services, Inc.
Now part of the ALS Group

34 Dogwood Lane ▪ Middletown, PA 17057 ▪ Phone: 717-944-5541 ▪ Fax: 717-944-1430 ▪ www.analyticallab.com ▪ www.alsglobal.com

NELAP Certifications: NJ PA010 , NY 11759 , PA 22-293 DoD ELAP: A2LA 0818.01
State Certifications: CT PH-0224 , DE ID 11 , GA 914 , MA PA0102 , MD 128 , LA 04162 , VA 421 , WY EPA Region 8 , WV 343

ANALYTICAL RESULTS

Workorder: 9910453 47-11-223689, 48-11-223692-693

Lab ID:	**9910453002**	Date Collected:	6/14/2011 09:05	Matrix:	Liquid Waste
Sample ID:	**48-11-223692-693**	Date Received:	6/14/2011 19:55		

Parameters	Results	Flag	Units	RDL	Method	Prepared	By	Analyzed	By	Cntr

Anna G Milliken
Technical Manager

ALS Environmental | Analytical Laboratory Services, Inc. Now part of the ALS Group

34 Dogwood Lane ▪ Middletown, PA 17057 ▪ Phone: 717-944-5541 ▪ Fax: 717-944-1430 ▪ www.analyticallab.com ▪ www.alsglobal.com

NELAP Certifications: NJ PA010 , NY 11759 , PA 22-293 DoD ELAP: A2LA 0818.01
State Certifications: CT PH-0224 , DE ID 11 , GA 914 , MA PA0102 , MD 128 , LA 04162 , VA 421 , WY EPA Region 8 , WV 343

ANALYTICAL RESULTS QUALIFIERS\FLAGS

Workorder: 9910453 47-11-223689, 48-11-223692-693

PARAMETER QUALIFIERS\FLAGS

[1] The recovery of the Matrix Spike (MS) associated to this analyte was outside of the established control limits. The sample was post-digestion spiked, and this matrix spike was not within acceptable recovery limits. 06.16.11 MNP

ALS Environmental | Analytical Laboratory Services, Inc. — Now part of the ALS Group

34 Dogwood Lane ■ Middletown, PA 17057 ■ Phone: 717-944-5541 ■ Fax: 717-944-1430 ■ www.analyticallab.com ■ www.alsglobal.com

NELAP Certifications: NJ PA010 , NY 11759 , PA 22-293 DoD ELAP: A2LA 0818.01
State Certifications: CT PH-0224 , DE ID 11 , GA 914 , MA PA0102 , MD 128 , LA 04162 , VA 421 , WY EPA Region 8 , WV 343

Analytical Laboratory Services, Inc.
Environmental • Industrial Hygiene • Field Services
34 Dogwood Lane • Middletown, PA 17057 • 717-944-5541 • Fax: 717-944-1430

CHAIN OF CUSTODY/ REQUEST FOR ANALYSIS
ALL SHADED AREAS MUST BE COMPLETED BY THE CLIENT/SAMPLER (INSTRUCTIONS ON THE BACK)

Page 1 of 1
Cooler:
Tracking #:

Co. Name: ALLEGHENY PROJECT GROUNDS
Contact (Report to): MANSOOR ZAKAI
Phone:
Address: P.O. BOX 105
GUNPOWDER, MD 21010
Bill to (if different than Report to):
PO#:
Project Name/#:
ALSI Quote #:
Normal-Standard TAT is 15-12 business days.
TAT: Rush-Subject to ALSI approval and surcharges.
Data Required:
Approved By:
Email? Y
Fax? Y No:

Sample Description/Location (as it will appear on the lab report)	Sample Date	Military Time	COC Comments	"G or C	"Matrix	"Container Type	"Container Size	"Preservative	ANALYSES/METHOD REQUESTED	Enter Number of Containers Per Analysis
1 47-11-223689	6/14	0900		C	L	RG		NONE	TCLP METALS	1
2 48-11-223692-693	6/14	0905		C	L				TCLP VOLATILES	1
3										
4										
5										
6										
7										
8										

SAMPLED BY (Please Print): JOHN FORD

Relinquished By / Company Name	Date	Time	Received By / Company Name	Date	Time
1 FRED LEDNARD	6/14/11	1550	2 [illegible] AIS	6/14/11	1550
3 [illegible]	6/14/11	[illegible]	4 [illegible]	6/14/11	[illegible]
5			6		
7			8		
9			10		

LOGGED BY (Signature): DATE TIME
REVIEWED BY (Signature): DATE TIME

Data Deliverables: Standard; CLP-like; NJ-Reduced; NJ-Full; Format: Other
EDDs Required?
DOD Criteria Required?
State Samples Collected In? MD NJ NY PA
SIGNIL Form No YES YES YES YES
ALSI FIELD SERVICES: Pickup; Labor; Composite Sampling; Rental Equipment; Other:

Custody seals Present?	Y	
If present, Seals Intact?	Y	
Received on Ice?	Y	
Correct preservation?	Y	N
Headspace/Volatiles?	Y	N
COC/Labels complete/accurate?	Y	N
Container in good condition?	Y	N
Correct sample volume?	Y	N
Correct containers?	Y	N

Circle appropriate Y or N.
Notes:
Cooler Temp:
Therm. ID: [illegible]
No. of Coolers:
Received by:
Received for Lab by:

*G=Grab; C=Composite
**Matrix: Air=Air; DW=Drinking Water; GW=Groundwater; OH=Oil; OL=Other Liquid; SL=Sludge; SO=Soil; WP=Wipe; WW=Wastewater
***Container Type: AG-Amber Glass; CG-Clear Glass; PL-Plastic. Container Size: 250ml, 500ml, 1L, Box., etc. Preservative: HCl, HNO3, NaOH, etc.
Copies: WHITE - ORIGINAL CANARY - CUSTOMER COPY
Rev 6/07

ALS Environmental | Analytical Laboratory Services, Inc.
Now part of the ALS Group

34 Dogwood Lane ▪ Middletown, PA 17057 ▪ Phone: 717-944-5541 ▪ Fax: 717-944-1430 ▪ www.analyticallab.com ▪ www.alsglobal.com

NELAP Certifications: NJ PA010 , NY 11759 , PA 22-293 DoD ELAP: A2LA 0818.01
State Certifications: CT PH-0224 , DE ID 11 , GA 914 , MA PA0102 , MD 128 , LA 04162 , VA 421 , WY EPA Region 8 , WV 343

June 22, 2011

Mr. Fred Leonard
U.S. Army Garrison
AMSSB-GSH-EW
P.O. Box 105
Gunpowder, MD 21010

Certificate of Analysis

Project Name:	**Option YEAR 4 (4/1/09-03/31/10)**	Workorder:	**9910454**
Purchase Order:	**W91ZLK05D0006/DO #7**	Workorder ID:	**40-11-HM223664,41-11,42-11**

Dear Mr. Leonard,

Enclosed are the analytical results for samples received by the laboratory on Tuesday, June 14, 2011.

The ALS Environmental laboratory in Middletown, Pennsylvania (formerly Analytical Laboratory Services, Inc.) is a National Environmental Laboratory Accreditation Program (NELAP) accredited laboratory and as such, certifies that all applicable test results meet the requirements of NELAP.

If you have any questions regarding this certificate of analysis, please contact Susan Scherer (Project Coordinator) or Anna G Milliken (Technical Manager) at (717) 944-5541.

Please visit us at www.analyticallab.com for a listing of ALS' NELAP accreditations and Scope of Work, as well as other links to Water Quality documentation on the internet.

This laboratory report may not be reproduced, except in full, without the written approval of ALS Environmental.

CC: Ms. Joyce Cimino, Mr. Mansoor Zakai

This page is included as part of the Analytical Report and must be retained as a permanent record thereof.

Anna G Milliken
Technical Manager

ALS Environmental Laboratory Locations Across North America

Canada: Burlington · Calgary · Centre of Excellence · Edmonton · Fort McMurray · Fort St. John · Grande Prairie · London · Mississauga · Richmond Hill · Saskatoon · Thunder Bay Vancouver Waterloo · Winnipeg · Yellowknife **United States:** Cincinnati · Everett · Fort Collins · Holland · Houston · Middletown · Salt Lake City · Spring City · York **Mexico:** Monterrey

ALS Environmental | Analytical Laboratory Services, Inc.
Now part of the ALS Group

34 Dogwood Lane ▪ Middletown, PA 17057 ▪ Phone: 717-944-5541 ▪ Fax: 717-944-1430 ▪ www.analyticallab.com ▪ www.alsglobal.com

NELAP Certifications: NJ PA010 , NY 11759 , PA 22-293 DoD ELAP: A2LA 0818.01
State Certifications: CT PH-0224 , DE ID 11 , GA 914 , MA PA0102 , MD 128 , LA 04162 , VA 421 , WY EPA Region 8 , WV 343

SAMPLE SUMMARY

Workorder: 9910454 40-11-HM223664,41-11,42-11 Discard Date: 07/13/2011

Lab ID	Sample ID	Matrix	Date Collected	Date Received	Collected By
9910454001	40-11-HM223664 ✓	Liquid Waste	6/9/11 09:15	6/14/11 19:55	Customer
9910454002	41-11-HM223681-684 ✓	Liquid Waste	6/9/11 09:15	6/14/11 19:55	Customer
9910454003	42-11-HM223659/680 ✓	Liquid Waste	6/9/11 09:15	6/14/11 19:55	Customer

Workorder Comments:

Notes

- Samples collected by ALS personnel are done so in accordance with the procedures set forth in the ALS Field Sampling Plan (20 - Field Services Sampling Plan).
- All Waste Water analyses comply with methodology requirements of 40 CFR Part 136.
- All Drinking Water analyses comply with methodology requirements of 40 CFR Part 141.
- Unless otherwise noted, all quantitative results for soils are reported on a dry weight basis.
- The Chain of Custody document is included as part of this report.
- All Library Search analytes should be regarded as tentative identifications based on the presumptive evidence of the mass spectra. Concentrations reported are estimated values.

Standard Acronyms/Flags

J, B	Indicates an estimated value between the Method Detection Limit (MDL) and the Practical Quantitation Limit (PQL) for the analyte
U	Indicates that the analyte was Not Detected (ND)
N	Indicates presumptive evidence of the presence of a compound
MDL	Method Detection Limit
PQL	Practical Quantitation Limit
RDL	Reporting Detection Limit
ND	Not Detected - indicates that the analyte was Not Detected at the RDL
Cntr	Analysis was performed using this container
RegLmt	Regulatory Limit
LCS	Laboratory Control Sample
MS	Matrix Spike
MSD	Matrix Spike Duplicate
DUP	Sample Duplicate
%Rec	Percent Recovery
RPD	Relative Percent Difference

ALS Environmental | Analytical Laboratory Services, Inc. Now part of the ALS Group

34 Dogwood Lane ▪ Middletown, PA 17057 ▪ Phone: 717-944-5541 ▪ Fax: 717-944-1430 ▪ www.analyticallab.com ▪ www.alsglobal.com

NELAP Certifications: NJ PA010 , NY 11759 , PA 22-293 DoD ELAP: A2LA 0818.01
State Certifications: CT PH-0224 , DE ID 11 , GA 914 , MA PA0102 , MD 128 , LA 04162 , VA 421 , WY EPA Region 8 , WV 343

ANALYTICAL RESULTS

1178-014

Workorder: 9910454 40-11-HM223664,41-11,42-11

Lab ID: **9910454001** Date Collected: 6/9/2011 09:15 Matrix: Liquid Waste

Sample ID: **40-11-HM223664** Date Received: 6/14/2011 19:55

Parameters	Results	Flag	Units	RDL	Method	Prepared	By	Analyzed	By	Cntr
TCLP VOLATILE ORGANICS										
Benzene	34700		ug/L	1000	SW846 8260B			6/17/11 23:12	DJB	A
2-Butanone	ND		ug/L	10000	SW846 8260B			6/17/11 23:12	DJB	A
Carbon Tetrachloride	ND		ug/L	1000	SW846 8260B			6/17/11 23:12	DJB	A
Chlorobenzene	ND		ug/L	1000	SW846 8260B			6/17/11 23:12	DJB	A
Chloroform	3670		ug/L	1000	SW846 8260B			6/17/11 23:12	DJB	A
1,2-Dichloroethane	ND		ug/L	1000	SW846 8260B			6/17/11 23:12	DJB	A
1,1-Dichloroethene	ND		ug/L	1000	SW846 8260B			6/17/11 23:12	DJB	A
Tetrachloroethene	ND		ug/L	1000	SW846 8260B			6/17/11 23:12	DJB	A
Trichloroethene	ND		ug/L	1000	SW846 8260B			6/17/11 23:12	DJB	A
Vinyl Chloride	ND		ug/L	1000	SW846 8260B			6/17/11 23:12	DJB	A
Surrogate Recoveries	*Results*	*Flag*	*Units*	*Limits*	*Method*	*Prepared*	*By*	*Analyzed*	*By*	*Cntr*
1,2-Dichloroethane-d4 (S)	92.1		%	62-133	SW846 8260B			6/17/11 23:12	DJB	A
4-Bromofluorobenzene (S)	102		%	79-114	SW846 8260B			6/17/11 23:12	DJB	A
Dibromofluoromethane (S)	91.7		%	78-116	SW846 8260B			6/17/11 23:12	DJB	A
Toluene-d8 (S)	101		%	76-127	SW846 8260B			6/17/11 23:12	DJB	A
TCLP METALS										
Arsenic, Total	0.21		mg/L	0.081	SW846 6010C	6/16/11	MNP	6/21/11 17:37	JWK	A1
Barium, Total	ND		mg/L	0.099	SW846 6010C	6/16/11	MNP	6/21/11 17:37	JWK	A1
Cadmium, Total	ND		mg/L	0.020	SW846 6010C	6/16/11	MNP	6/21/11 17:37	JWK	A1
Chromium, Total	ND		mg/L	0.050	SW846 6010C	6/16/11	MNP	6/21/11 17:37	JWK	A1
Lead, Total	ND		mg/L	0.060	SW846 6010C	6/16/11	MNP	6/21/11 17:37	JWK	A1
Mercury, Total	ND		mg/L	0.010	SW846 7470A	6/16/11	MNP	6/16/11 13:15	MNP	A2
Selenium, Total	ND		mg/L	0.20	SW846 6010C	6/16/11	MNP	6/21/11 17:37	JWK	A1
Silver, Total	ND		mg/L	0.040	SW846 6010C	6/16/11	MNP	6/21/11 17:37	JWK	A1
TCLP LEACHATE										
Final pH	9.00		pH_Units		SW846 1311			6/16/11 11:15	SDL	A

D018

Sample Comments:

The percent dry solid per the EPA leaching procedure was less than 0.5%. The sample was filtered to form the leachate.

The GCMS volatiles analysis was performed at a dilution due to the level of target compounds.

ALS Environmental | Analytical Laboratory Services, Inc.
Now part of the ALS Group

34 Dogwood Lane ▪ Middletown, PA 17057 ▪ Phone: 717-944-5541 ▪ Fax: 717-944-1430 ▪ www.analyticallab.com ▪ www.alsglobal.com

NELAP Certifications: NJ PA010 , NY 11759 , PA 22-293 DoD ELAP: A2LA 0818.01
State Certifications: CT PH-0224 , DE ID 11 , GA 914 , MA PA0102 , MD 128 , LA 04162 , VA 421 , WY EPA Region 8 , WV 343

ANALYTICAL RESULTS

Workorder: 9910454 40-11-HM223664,41-11,42-11

Lab ID:	**9910454001**	Date Collected:	6/9/2011 09:15	Matrix:	Liquid Waste
Sample ID:	**40-11-HM223664**	Date Received:	6/14/2011 19:55		

Parameters	Results	Flag	Units	RDL	Method	Prepared	By	Analyzed	By	Cntr

Anna G Milliken
Technical Manager

ALS Environmental | Analytical Laboratory Services, Inc.
Now part of the ALS Group

34 Dogwood Lane ▪ Middletown, PA 17057 ▪ Phone: 717-944-5541 ▪ Fax: 717-944-1430 ▪ www.analyticallab.com ▪ www.alsglobal.com

NELAP Certifications: NJ PA010 , NY 11759 , PA 22-293 DoD ELAP: A2LA 0818.01
State Certifications: CT PH-0224 , DE ID 11 , GA 914 , MA PA0102 , MD 128 , LA 04162 , VA 421 , WY EPA Region 8 , WV 343

ANALYTICAL RESULTS

1178-017

Workorder: 9910454 40-11-HM223664,41-11,42-11

Lab ID: **9910454002** Date Collected: 6/9/2011 09:15 Matrix: Liquid Waste

Sample ID: **41-11-HM223681-684** Date Received: 6/14/2011 19:55

Parameters	Results	Flag	Units	RDL	Method	Prepared	By	Analyzed	By	Cntr
TCLP VOLATILE ORGANICS										
Benzene	146000		ug/L	1000	SW846 8260B			6/17/11 23:46	DJB	A
2-Butanone	ND		ug/L	10000	SW846 8260B			6/17/11 23:46	DJB	A
Carbon Tetrachloride	4120		ug/L	1000	SW846 8260B			6/17/11 23:46	DJB	A
Chlorobenzene	ND		ug/L	1000	SW846 8260B			6/17/11 23:46	DJB	A
Chloroform	812001		ug/L	1000	SW846 8260B			6/17/11 23:46	DJB	A
1,2-Dichloroethane	ND		ug/L	1000	SW846 8260B			6/17/11 23:46	DJB	A
1,1-Dichloroethene	ND		ug/L	1000	SW846 8260B			6/17/11 23:46	DJB	A
Tetrachloroethene	ND		ug/L	1000	SW846 8260B			6/17/11 23:46	DJB	A
Trichloroethene	ND		ug/L	1000	SW846 8260B			6/17/11 23:46	DJB	A
Vinyl Chloride	ND		ug/L	1000	SW846 8260B			6/17/11 23:46	DJB	A
Surrogate Recoveries	*Results*	*Flag*	*Units*	*Limits*	*Method*	*Prepared*	*By*	*Analyzed*	*By*	*Cntr*
1,2-Dichloroethane-d4 (S)	90		%	62-133	SW846 8260B			6/17/11 23:46	DJB	A
4-Bromofluorobenzene (S)	101		%	79-114	SW846 8260B			6/17/11 23:46	DJB	A
Dibromofluoromethane (S)	91.3		%	78-116	SW846 8260B			6/17/11 23:46	DJB	A
Toluene-d8 (S)	101		%	76-127	SW846 8260B			6/17/11 23:46	DJB	A
TCLP METALS										
Arsenic, Total	ND		mg/L	0.081	SW846 6010C	6/16/11	MNP	6/21/11 17:41	JWK	A1
Barium, Total	ND		mg/L	0.099	SW846 6010C	6/16/11	MNP	6/21/11 17:41	JWK	A1
Cadmium, Total	ND		mg/L	0.020	SW846 6010C	6/16/11	MNP	6/21/11 17:41	JWK	A1
Chromium, Total	ND		mg/L	0.050	SW846 6010C	6/16/11	MNP	6/21/11 17:41	JWK	A1
Lead, Total	ND		mg/L	0.060	SW846 6010C	6/16/11	MNP	6/21/11 17:41	JWK	A1
Mercury, Total	ND		mg/L	0.010	SW846 7470A	6/16/11	MNP	6/16/11 13:16	MNP	A2
Selenium, Total	2.1		mg/L	0.20	SW846 6010C	6/16/11	MNP	6/21/11 17:41	JWK	A1
Silver, Total	ND		mg/L	0.040	SW846 6010C	6/16/11	MNP	6/21/11 17:41	JWK	A1
TCLP LEACHATE										
Final pH	8.00		pH_Units		SW846 1311			6/16/11 11:15	SDL	A

Sample Comments:

The percent dry solid per the EPA leaching procedure was less than 0.5%. The sample was filtered to form the leachate.

The GCMS volatiles analysis was performed at a dilution due to the level of target compounds.

ALS Environmental | Analytical Laboratory Services, Inc.
Now part of the ALS Group

34 Dogwood Lane ▪ Middletown, PA 17057 ▪ Phone: 717-944-5541 ▪ Fax: 717-944-1430 ▪ www.analyticallab.com ▪ www.alsglobal.com

NELAP Certifications: NJ PA010 , NY 11759 , PA 22-293 DoD ELAP: A2LA 0818.01
State Certifications: CT PH-0224 , DE ID 11 , GA 914 , MA PA0102 , MD 128 , LA 04162 , VA 421 , WY EPA Region 8 , WV 343

ANALYTICAL RESULTS

Workorder: 9910454 40-11-HM223664,41-11,42-11

Lab ID:	**9910454002**	Date Collected:	6/9/2011 09:15	Matrix:	Liquid Waste
Sample ID:	**41-11-HM223681-684**	Date Received:	6/14/2011 19:55		

Parameters	Results	Flag	Units	RDL	Method	Prepared	By	Analyzed	By	Cntr

Anna G Milliken
Technical Manager

ALS Environmental | Analytical Laboratory Services, Inc. Now part of the ALS Group

34 Dogwood Lane ▪ Middletown, PA 17057 ▪ Phone: 717-944-5541 ▪ Fax: 717-944-1430 ▪ www.analyticallab.com ▪ www.alsglobal.com

NELAP Certifications: NJ PA010 , NY 11759 , PA 22-293 DoD ELAP: A2LA 0818.01
State Certifications: CT PH-0224 , DE ID 11 , GA 914 , MA PA0102 , MD 128 , LA 04162 , VA 421 , WY EPA Region 8 , WV 343

ANALYTICAL RESULTS

1178-019

Workorder: 9910454 40-11-HM223664,41-11,42-11

Lab ID: **9910454003** Date Collected: 6/9/2011 09:15 Matrix: Liquid Waste

Sample ID: **42-11-HM223659/680** Date Received: 6/14/2011 19:55

Parameters	Results	Flag	Units	RDL	Method	Prepared	By	Analyzed	By	Cntr
TCLP VOLATILE ORGANICS										
Benzene	7850000		ug/L	200000	SW846 8260B			6/21/11 12:09	MES	A
2-Butanone	ND		ug/L	50000	SW846 8260B			6/20/11 00:08	DD	A
Carbon Tetrachloride	ND		ug/L	5000	SW846 8260B			6/20/11 00:08	DD	A
Chlorobenzene	126000		ug/L	5000	SW846 8260B			6/20/11 00:08	DD	A
Chloroform	290000		ug/L	5000	SW846 8260B			6/20/11 00:08	DD	A
1,2-Dichloroethane	ND		ug/L	5000	SW846 8260B			6/20/11 00:08	DD	A
1,1-Dichloroethene	ND		ug/L	5000	SW846 8260B			6/20/11 00:08	DD	A
Tetrachloroethene	31600		ug/L	5000	SW846 8260B			6/20/11 00:08	DD	A
Trichloroethene	8010		ug/L	5000	SW846 8260B			6/20/11 00:08	DD	A
Vinyl Chloride	ND		ug/L	5000	SW846 8260B			6/20/11 00:08	DD	A
Surrogate Recoveries	*Results*	*Flag*	*Units*	*Limits*	*Method*	*Prepared*	*By*	*Analyzed*	*By*	*Cntr*
1,2-Dichloroethane-d4 (S)	80.7		%	62-133	SW846 8260B			6/20/11 00:08	DD	A
4-Bromofluorobenzene (S)	102		%	79-114	SW846 8260B			6/20/11 00:08	DD	A
Dibromofluoromethane (S)	96.1		%	78-116	SW846 8260B			6/20/11 00:08	DD	A
Toluene-d8 (S)	95.8		%	76-127	SW846 8260B			6/20/11 00:08	DD	A
1,2-Dichloroethane-d4 (S)	93.7		%	62-133	SW846 8260B			6/21/11 12:09	MES	A
4-Bromofluorobenzene (S)	103		%	79-114	SW846 8260B			6/21/11 12:09	MES	A
Dibromofluoromethane (S)	92.8		%	78-116	SW846 8260B			6/21/11 12:09	MES	A
Toluene-d8 (S)	99.4		%	76-127	SW846 8260B			6/21/11 12:09	MES	A
TCLP METALS										
Arsenic, Total	2.2		mg/L	0.081	SW846 6010C	6/16/11	MNP	6/21/11 18:13	JWK	A1
Barium, Total	ND		mg/L	0.099	SW846 6010C	6/16/11	MNP	6/21/11 18:13	JWK	A1
Cadmium, Total	0.063		mg/L	0.020	SW846 6010C	6/16/11	MNP	6/21/11 18:13	JWK	A1
Chromium, Total	0.23		mg/L	0.050	SW846 6010C	6/16/11	MNP	6/21/11 18:13	JWK	A1
Lead, Total	3.5		mg/L	0.060	SW846 6010C	6/16/11	MNP	6/21/11 18:13	JWK	A1
Mercury, Total	ND		mg/L	0.010	SW846 7470A	6/16/11	MNP	6/16/11 13:17	MNP	A2
Selenium, Total	2.7		mg/L	0.20	SW846 6010C	6/16/11	MNP	6/21/11 18:13	JWK	A1
Silver, Total	ND		mg/L	0.040	SW846 6010C	6/16/11	MNP	6/21/11 18:13	JWK	A1
TCLP LEACHATE										
Final pH	13.00		pH_Units		SW846 1311			6/16/11 11:15	SDL	A

0002

Sample Comments:

The percent dry solid per the EPA leaching procedure was less than 0.5%. The sample was filtered to form the leachate.

The GCMS volatiles analysis was performed at a dilution due to the level of target compounds.

ALS Environmental | Analytical Laboratory Services, Inc.
Now part of the ALS Group

34 Dogwood Lane ▪ Middletown, PA 17057 ▪ Phone: 717-944-5541 ▪ Fax: 717-944-1430 ▪ www.analyticallab.com ▪ www.alsglobal.com

NELAP Certifications: NJ PA010 , NY 11759 , PA 22-293 DoD ELAP: A2LA 0818.01
State Certifications: CT PH-0224 , DE ID 11 , GA 914 , MA PA0102 , MD 128 , LA 04162 , VA 421 , WY EPA Region 8 , WV 343

ANALYTICAL RESULTS

Workorder: 9910454 40-11-HM223664,41-11,42-11

Lab ID:	**9910454003**	Date Collected:	6/9/2011 09:15	Matrix:	Liquid Waste
Sample ID:	**42-11-HM223659/680**	Date Received:	6/14/2011 19:55		

Parameters	Results	Flag	Units	RDL	Method	Prepared	By	Analyzed	By	Cntr

Anna G Milliken
Technical Manager

ALS Environmental | ANALYTICAL LABORATORY SERVICES, INC. Now part of the ALS Group | NELAP ACCREDITED TNI LABORATORY

34 Dogwood Lane ■ Middletown, PA 17057 ■ Phone: 717-944-5541 ■ Fax: 717-944-1430 ■ www.analyticallab.com ■ www.alsglobal.com

NELAP Certifications: NJ PA010 , NY 11759 , PA 22-293 DoD ELAP: A2LA 0818.01
State Certifications: CT PH-0224 , DE ID 11 , GA 914 , MA PA0102 , MD 128 , LA 04162 , VA 421 , WY EPA Region 8 , WV 343

Analytical Laboratory Services, Inc.
Environmental • Industrial Hygiene • Field Services
34 Dogwood Lane • Middletown, PA 17057 • 717-944-5541 • Fax: 717-944-1430

CHAIN OF CUSTODY/ REQUEST FOR ANALYSIS
ALL SHADED AREAS MUST BE COMPLETED BY THE CLIENT/SAMPLER. INSTRUCTIONS ON THE BACK.

Page 1 of 1
Courier:
Tracking #:

Co. Name: ABERDEEN PROVING GROUNDS
Contact (Report to): MR. MANGOOR, ZAKAI Phone: 436-2157
Address: P.O. BOX 105 ABERDEEN GUNPOWDER, MD 21010
Bill to (if different than Report to):
PO#:
Project Name/#:
ALSI Quote #:
TAT: Normal Standard TAT is 10-12 business days. Rush-Subject to ALSI approval and surcharges.
Date Req'd/ml:
Approved By:
Email? Y
Fax? Y No:

Sample Description/Location (not all storage on this lab report)	COC Comments	Sample Date	Military Time	Container Type	Container Size	Preservative	TCLP METALS TCLP VOLATILES	Enter Number of Containers Per Analysis
1 40-11-HM 223664		06/9	0915	BG	L			1
2 41-11-HM 223681-684		06/9	0915		L			1
3 42-11 HM 223659/680		06/9	0915		L			1
4								
5								
6								
7								
8								

Transfer to Lab Received by: Date/Time
Cooler Temp: 1
Therm. ID: 1
No. of Coolers:
Notes:

Circle appropriate Y or N.
Custody Seals Present? Y N
(If present) Seals Intact? Y N
Correct sample volume? Y N
Correct preservative? Y N
Headspace/Volatiles? Y N
Correct containers? Y N
Received on ice? Y N
COC/Labels complete/accurate? Y N
Container in good condition? Y N

SAMPLED BY (Please Print): John Ford
LOGGED BY (Signature): Date 6/14/11
REVIEWED BY (Signature): Date

Relinquished By / Company Name	Date	Time	Received By / Company Name	Date	Time
1 FRED LEONARD	6/14/11	1655	2 ALS	6/14/11	1550
3	6-14	1817	4 Scott Rhodes	6-14-11	1830
5	6-14-11	1915	6	6/14/11	1915
7			8		
9			10		

ALSI FIELD SERVICES: Pickup, Labor, Composite Sampling, Rental Equipment, Other:

Data Deliverables: Standard, CLP-like, NJ-Reduced, NJ-Full, If yes, format type: Other
EDDs: Standard, If yes, format type:
Sample Samples Collected in? MD, NJ, NY, PA
SDWA Forms? Pb, Cu, Other
DOD Criteria Required?

Copies: WHITE - ORIGINAL CANARY - CUSTOMER COPY
*D=Grab; C=Composite **Matrix: A=Air; DW=Drinking Water; GW=Groundwater; O=Oil; OL=Other Liquid; SL=Sludge; SO=Soil; WP=Wipe; WW=Wastewater
***Container Type: AG-Amber Glass; CG-Clear Glass; PL-Plastic. Container Size: 250ml, 500ml, 1L, 8oz., etc. Preservative: HCl, HNO3, NaOH, etc.
Rev 6/07

ALS Environmental Laboratory Locations Across North America
Canada: Burlington · Calgary · Centre of Excellence · Edmonton · Fort McMurray · Fort St. John · Grande Prairie · London · Mississauga · Richmond Hill · Saskatoon · Thunder Bay
Vancouver Waterloo · Winnipeg · Yellowknife United States: Cincinnati · Everett · Fort Collins · Holland · Houston · Middletown · Salt Lake City · Spring City · York Mexico: Monterrey

Report ID: 9910454 Page 9 of 9

Turn-In Document: W90B30-1157-0019 Page 1

Status

ID: W90B30-1157-0019
Status: ALL CONTAINERS OFFSITE
Date Generated: 06-Jun-2011

Fund Cite: 1WEP3D J-FLD

Non-reusable product
Posted, but not taken from Freebies List nor sold by DRMO

Activity: SBCCOM
Generator: DENNIS HALL
Phone: 5-3150
e-mail: dennis.g.hall@us.army.mil

Office: RDCB-DPO-A
Generator Site: BLDGREN
Building: ECBC
Location: NA
Phone: 5-3150

Data Entry: FORD, JOHN
Phone: c443-655-7298
e-mail: john.w.ford@us.army.mil

Receiving Site: E5844
Manager: FORD, JOHN
Phone: c443-655-7298
e-mail: john.w.ford@us.army.mil

Analysis

ID: 1157-013
Nomenclature: EDS RINSATE (5/24)
Status: IEC APPROVED

Containers

Form Code: B106 - CAUSTIC SOLUTION WITH METALS BUT NO CYANIDES

Container		Packaging			Storage				Disposal					
Barcode	HITS ID	Pack	Cntr Type	Wgt (lbs)	Type	Building	Location	Description	CLIN	Cost	Manifest ID	Line #	Shipped	Disposed
HM000223644		NC	DR55	300	IS	E5864	ROOM 2	BASES						

Comments

Generator Comments:

AEC Comments:

IEC Comments:

HWTS 08-Aug-2011 09:09

Analysis Record: 1157-013 - EDS RINSATE (5/24) Page 1

Status

ID: 1157-013
Nomenclature: EDS RINSATE (5/24)
Status: IEC APPROVED
Date Generated: 06-Jun-2011

Information From: Label
MSDS
Generator Knowledge
Lab Analysis EPA Lab ID: ANALYTICAL LAB SVCS Analysis Record(s): HMZ23644

Activity: SBCCOM
Generator: DENNIS HALL
Phone: 5-3150
e-mail: dennis.g.hall@us.army.mil

Office: RDCB-DPO-A
Generator Site: BLDGREN
Building: ECBC
Location: NA
Phone: 5-3150

Data Entry: FORD, JOHN
Phone: c443-655-7298
e-mail: john.w.ford@us.army.mil

Physical

State: Liquid
Corrosive: pH >= 12.5
Flashpoint: >= 140° F
Layers: Single
UHC's Present: Yes
Color: BLACK

Hazards

State Process: A03 - CAUSTIC (ALKALI) CLEANING (CLEANING & DEGREASING).
General Properties:

Oxidizer	PCBs	Flammable Solid	Air Reactive	Water Reactive
Cyanide Bearing	Sulfide Bearing	Explosive	Radioactive	

EPA Codes:

Code	Description	CAS
D002	CORROSIVE AQUEOUS LIQUID WITH PH <= 2 OR >= 12.5	
D008	LEAD CHARACTERISTIC WASTE / TCLP >= 5.0 PPM	7439-92-1
D010	SELENIUM CHARACTERISTIC WASTE / TCLP >= 1.0 PPM	7782-49-2
D018	BENZENE CHARACTERISTIC WASTE / TCLP >= 0.5 PPM	61-43-2

Chemicals

Name	CAS	Min	Max	Units
BENZENE	71-43-2	105	107	ppm
WATER	7732-18-5	60	70	%
SODIUM HYDROXIDE	1310-73-2	30	40	%
LEAD	7439-92-1	9.6	9.8	mg/l
SELENIUM	7782-49-2	1.3	1.5	mg/l

Comments

Generator Comments:

AEC Comments:

IEC Comments:

HWTS 08-Aug-2011 09:09

Turn-In Document: W90B30-1157-0020

Status

ID: W90B30-1157-0020
Status: ALL CONTAINERS OFFSITE
Date Generated: 06-Jun-2011

Fund Cite: IW3P3D J-FLD

Non-reusable product
Posted, but not taken from Freebies List nor sold by DRMO

Activity: SBCCOM
Generator: DENNIS HALL
Phone: 5-3150
e-mail: dennis.g.hall@us.army.mil

Office: RDCB-DPO-A
Generator Site: BLDGREN
Building: ECBC
Location: NA
Phone: 5-3150

Data Entry: FORD, JOHN
Phone: c443-655-7298
e-mail: john.w.ford@us.army.mil

Receiving Site: E5844
Manager: FORD, JOHN
Phone: c443-655-7298
e-mail: john.w.ford@us.army.mil

Analysis

ID: 1157-014
Nomenclature: EDS RINSATE (5/24)
Status: IEC APPROVED

Containers

Form Code: B106 - CAUSTIC SOLUTION WITH METALS BUT NO CYANIDES

Container		Packaging			Storage				Disposal					
Barcode	HITS ID	Pack	Cntr Type	Wgt (lbs)	Type	Building	Location	Description	CLIN	Cost	Manifest ID	Line #	Shipped	Disposed
HM000223645		NC	DM55	320	IS	E5864	ROOM 2	BASES						
HM000223646		NC	DM55	280	IS	E5864	ROOM 2	BASES					–	
HM000223647		NC	DM55	380	IS	E5864	ROOM 2	BASES						
HM000223649		NC	DM55	300	IS	E5864	ROOM 2	BASES						
HM000223650		NC	DM55	325	IS	E5864	ROOM 2	BASES						
HM000223652		NC	DM55	320	IS	E5864	ROOM 2	BASES						
HM000223653		NC	DM55	400	IS	E5864	ROOM 2	BASES						

Comments

Generator Comments:

AEC Comments:

IEC Comments:

HWTS 08-Aug-2011 09:09

Analysis Record: 1157-014 - EDS RINSATE (5/24) Page 1

Status

ID: 1157-014
Nomenclature: EDS RINSATE (5/24)
Status: IEC APPROVED
Date Generated: 06-Jun-2011

Information From: Label
MSDS
Generator Knowledge
Lab Analysis EPA Lab ID: ANALYTICAL LAB SVCS Analysis Record(s): 223645

Activity: SBCCOM
Generator: DENNIS HALL
Phone: 5-3150
e-mail: dennis.g.hall@us.army.mil

Office: RDCB-DPO-A
Generator Site: BLDGREN
Building: ECBC
Location: NA
Phone 5-3150

Data Entry: FORD, JOHN
Phone: c443-655-7298
e-mail: john.w.ford@us.army.mil

Physical

State: Liquid
Corrosive: pH >= 12.5
Flashpoint: >= 140° F
Layers: Single
UHC's Present: Yes
Color: YELLOWISH TO BLACK

Hazards

State Process: A03 - CAUSTIC (ALKALI) CLEANING (CLEANING & DEGREASING).
General Properties:
☐ Oxidizer ☐ PCBs ☐ Flammable Solid ☐ Air Reactive ☐ Water Reactive
☐ Cyanide Bearing ☐ Sulfide Bearing ☐ Explosive ☐ Radioactive

EPA Codes:

Code	Description	CAS
D002	CORROSIVE AQUEOUS LIQUID WITH PH <= 2 OR >= 12.5	
D010	SELENIUM CHARACTERISTIC WASTE / TCLP >= 1.0 PPM	7782-49-2
D018	BENZENE CHARACTERISTIC WASTE / TCLP >= 0.5 PPM	61-43-2

Chemicals

Name	CAS	Min	Max	Units
BENZENE	71-43-2	191	193	ppm
WATER	7732-18-5	60	70	%
SODIUM HYDROXIDE	1310-73-2	30	40	%
SELENIUM	7782-49-2	1.1	1.3	mg/l

Comments

Generator Comments:

AEC Comments:

IEC Comments:

HWTS 08-Aug-2011 09:09

Turn-In Document: W90B30-1157-0021 Page 1

Status

ID: W90B30-1157-0021
Status: ALL CONTAINERS OFFSITE
Date Generated: 06-Jun-2011

Fund Cite: 1WEP3D J-FLD

Non-reusable product
Posted, but not taken from Freebies List nor sold by DRMO

Activity: SBCCOM
Generator: DENNIS HALL
Phone: 5-3150
e-mail: dennis.g.hall@us.army.mil

Office: RDCB-DPO-A
Generator Site: BLDGREN
Building: ECBC
Location: NA
Phone: 5-3150

Data Entry: FORD, JOHN
Phone: c443-655-7298
e-mail: john.w.ford@us.army.mil

Receiving Site: E5844
Manager: FORD, JOHN
Phone: c443-655-7298
e-mail: john.w.ford@us.army.mil

Analysis

ID: 1157-015
Nomenclature: EDS RINSATE (5/24)
Status: IEC APPROVED

Containers

Form Code: B106 - CAUSTIC SOLUTION WITH METALS BUT NO CYANIDES

Container		Packaging			Storage				Disposal					
Barcode	HITS ID	Pack	Cntr Type	Wgt (lbs)	Type	Building	Location	Description	CLIN	Cost	Manifest ID	Line #	Shipped	Disposed
HM000223651		INC	DM55	280	IS	E5861	ROOM 2	BASES						

Comments

Generator Comments:

AEC Comments:

IEC Comments:

HWTS 08-Aug-2011 09:09

Analysis Record: 1157-015 - EDS RINSATE (5/24) Page 1

Status

ID: 1157-015
Nomenclature: EDS RINSATE (5/24)
Status: IEC APPROVED
Date Generated: 06-Jun-2011

Information From: Label
MSDS
Generator Knowledge
Lab Analysis EPA Lab ID: ANALYTIACAL LAB SVCS Analysis Record(s): 223651

Activity: SBCCOM
Generator: DENNIS HALL
Phone: 5-3150
e-mail: dennis.g.hall@us.army.mil

Office: RDCB-DPO-A
Generator Site: BLDGREN
Building: ECBC
Location: NA
Phone 5-3150

Data Entry: FORD, JOHN
Phone: c443-655-7298
e-mail: john.w.ford@us.army.mil

Physical

State: Liquid
Corrosive: pH >= 12.5
Flashpoint: >= 140° F
Layers: Single
UHC's Present: Yes
Color: BLACK

Hazards

State Process: A03 - CAUSTIC (ALKALI) CLEANING (CLEANING & DEGREASING).
General Properties.

- [ ] Oxidizer
- [ ] Cyanide Bearing
- PCBs
- Sulfide Bearing
- [ ] Flammable Solid
- [ ] Explosive
- [ ] Air Reactive
- Radioactive
- Water Reactive

EPA Codes:

Code	Description	CAS
D002	CORROSIVE AQUEOUS LIQUID WITH PH <= 2 OR >= 12.5	
D010	SELENIUM CHARACTERISTIC WASTE / TCLP >= 1.0 PPM	7782-49-2

Chemicals

Name	CAS	Min	Max	Units
WATER	7732-18-5	70	80	%
SODIUM HYDROXIDE	1310-73-2	20	30	%
SELENIUM	7782-49-2	2.6	2.8	mg/l

Comments

Generator Comments:

AEC Comments:

IEC Comments:

HWTS 08-Aug-2011 09:09

Turn-In Document: W90B30-1144-0005 Page 1

Status

ID: W90B30-1144-0005
Status: ALL CONTAINERS OFFSITE
Date Generated: 24-May-2011

Fund Cite: 1WEP3D J-FLD

Non-reusable product
Posted, but not taken from Freebies List nor sold by DRMO

Activity: SBCCOM
Generator: DENNIS HALL
Phone: 5-3150
e-mail: dennis.g.hall@us.army.mil

Office: RDCB-DPO-A
Generator Site: BLDGREN
Building: ECBC
Location: NA
Phone: 5-3150

Data Entry: FORD, JOHN
Phone: c443-655-7298
e-mail: john.w.ford@us.army.mil

Receiving Site: E5844
Manager: FORD, JOHN
Phone: c443-655-7298
e-mail: john.w.ford@us.army.mil

Analysis

ID: 1144-003
Nomenclature: PPE W/BENZENE RESIDUE
Status: IEC APPROVED

Containers

Form Code: B319 - OTHER WASTE INORGANIC SOLIDS (SPECIFY IN COMMENTS)

Container		Packaging			Storage				Disposal					
Barcode	HTS ID	Pack	Cntr Type	Wgt (lbs)	Type	Building	Location	Description	CLIN	Cost	Manifest ID	Line #	Shipped	Disposed
HM000223654		NC	DP55	72	IS	C5804	ROOM 5	OTHER ORGANICS						

Comments

Generator Comments: NO MONITORING RESULTS NEEDED WITH THIS TID.

AEC Comments: see comments on analysis sheet 1144-003

IEC Comments:

HWTS 08-Aug-2011 09:10

Analysis Record: 1144-003 - PPE W/BENZENE RESIDUE

Status

ID: 1144-003
Nomenclature: PPE W/BENZENE RESIDUE
Status: IEC APPROVED
Date Generated: 24-May-2011

Information From:
- Label
- MSDS
- Generator Knowledge
- Lab Analysis

Activity: SRCCOM
Generator: DENNIS HALL
Phone: 5-3150
e-mail: dennis.g.hall@us.army.mil

Office: RDCB-DPO-A
Generator Site: BLDGREN
Building: ECBC
Location: NA
Phone: 5-3150

Data Entry: FORD, JOHN
Phone: c443-655-7298
e-mail: john.w.ford@us.army.mil

Physical

State: Solid
Corrosive: NA
Flashpoint:
Layers: Single
UHC's Present:
Color:

Hazards

State Process: A91 - CLOTHING AND PERSONAL PROTECTIVE EQUIPMENT (OTHER PROCESSES)
General Properties:

Oxidizer	PCBs	Flammable Solid	Air Reactive	Water Reactive
Cyanide Bearing	Sulfide Bearing	Explosive	Radioactive	

EPA Codes:

Code	Description	CAS
D018	BENZENE CHARACTERISTIC WASTE / TCLP >= 0.5 PPM	61-43-2

Chemicals

Name	CAS	Min	Max	Units
PPE (PLASTIC/TYVEK & RUBBER)		100	100	%
BENZENE	71-43-2	0.5	0.7	ppm

Comments

Generator Comments:

AEC Comments: item containing benzene blown and benzene trapped in items

IEC Comments:

HWTS 08-Aug-2011 09:10

Turn-In Document: W90B30-1144-0004 Page 1

Status

ID: W90B30-1144-0004
Status: ALL CONTAINERS OFFSITE
Date Generated: 24-May-2011
AEC Approved: 25-May-2011
IEC Approved: 27-May-2011

Fund Cite: 1WEPED J-FLD

Non-reusable product
Posted, but not taken from Freebies List nor sold by DRMO

Activity: SBCCOM
Generator: DENNIS HALL
Phone: 5-3150
e-mail: dennis.g.hall@us.army.mil

Office: RDCB-DPO-A
Generator Site: BLDGREN
Building: ECBC
Location: NA
Phone: 5-3150

Data Entry: FORD, JOHN
Phone: c443-655-7298
e-mail: john.w.ford@us.army.mil

Receiving Site: E5844
Manager: FORD, JOHN
Phone: c443-655-7298
e-mail: john.w.ford@us.army.mil

Analysis

ID: 1144-002
Nomenclature: ASZM TEDA CARBON FILTER W/BENZENE
Status: IEC APPROVED

Containers

Form Code: B310 - SPENT SOLID FILTERS OR ADSORBENTS

Container		Packaging			Storage						Disposal			
Barcode	HITS ID	Pack	Cntr Type	Wgt (lbs)	Type	Building	Location	Description	CLIN	Cost	Manifest ID	Line #	Shipped	Disposed
HM000223655		NC	DRSS	15	IS	E5866	ROOM 7	MD02MD02XXX						
HM000223656		NC	EA	15	IS	E5866	ROOM 7	MD02MD03XXX						

Comments

Generator Comments: NO MONITORING RESULTS NEEDED WITH THIS TID.

AEC Comments:

IEC Comments:

HWTS 08-Aug-2011 09:10

Analysis Record: 1144-002 - ASZM TEDA CARBON FILTER W/BENZENE

Status

ID: 1144-002
Nomenclature: ASZM TEDA CARBON FILTER W/BENZENE
Status: IEC APPROVED
Date Generated: 24-May-2011

Information From: Label
MSDS
Generator Knowledge
Lab Analysis

Activity: SBCCOM
Generator: DENNIS HALL
Phone: 5-3150
e-mail: dennis.g.hall@us.army.mil

Office: RDCB-DPO-A
Generator Site: BLDGREN
Building: ECBC
Location: NA
Phone: 5-3150

Data Entry: FORD, JOHN
Phone: c443-655-7298
e-mail: john.w.ford@us.army.mil

Physical

State: Solid
Corrosive: NA
Flashpoint:
Layers: Single
UHC's Present:
Color:

Hazards

State Process: A55 - FILTER/BATTERY REPLACEMENT (ONE-TIME & INTERMITTENT PROCESS.
General Properties:

Oxidizer	PCBs	Flammable Solid	Air Reactive	Water Reactive
Cyanide Bearing	Sulfide Bearing	Explosive	Radioactive	

EPA Codes:

Code	Description	CAS
D018	BENZENE CHARACTERISTIC WASTE / TCLP >= 0.5 PPM	61-43-2

Chemicals

Name	CAS	Min	Max	Units
METAL HOUSING		30	75	%
ASZM TEDA CARBON		25	35	%
BENZENE	71-43-2	0.5	0.7	ppm

Comments

Generator Comments:

AEC Comments: benzene item blown and trapped in items in the turn in

IEC Comments:

HWTS 08-Aug-2011 09:10

Turn-In Document: W90B30-1178-0029 Page 1

Status

ID: W90B30-1178-0029
Status: ALL CONTAINERS OFFSITE
Date Generated: 27-Jun-2011

Fund Cite: 1WEP3D J-FLD

Non-reusable product
Posted, but not taken from Freebies List nor sold by DRMO

Activity: SBCCOM
Generator: DENNIS HALL
Phone: 5-3150
e-mail: dennis.g.hall@us.army.mil

Office: RDCB-DPO-A
Generator Site: BLDGREN
Building: ECBC
Location: NA
Phone: 5-3150

Data Entry: FORD, JOHN
Phone: c443-655-7298
e-mail: john.w.ford@us.army.mil

Receiving Site: E5844
Manager: FORD, JOHN
Phone: c443-655-7298
e-mail: john.w.ford@us.army.mil

Analysis

ID: 1178-019
Nomenclature: EDS RINSATE (223659)
Status: IEC APPROVED

Containers

Form Code: B110 - CAUSTIC AQUEOUS WASTE

Container		Packaging				Storage			Disposal					
Barcode	HITS ID	Pack	Cntr Type	Wgt (lbs)	Type	Building	Location	Description	CLIN	Cost	Manifest ID	Line #	Shipped	Disposed
HM000223659		NC	DM55	280	IS	E5864	ROOM 5	OTHER ORGANICS						
HM000223680		NC	DM55	320	IS	E5864	ROOM 5	OTHER ORGANICS						

Comments

Generator Comments:

AEC Comments:

IEC Comments: SEE ANALYSIS

HWTS 08-Aug-2011 09:07

Analysis Record: 1178-019 - EDS RINSATE (223659) Page 1

Status

ID: 1178-019
Nomenclature: EDS RINSATE (223659)
Status: IEC APPROVED
Date Generated: 27-Jun-2011

Information From: Label
MSDS
Generator Knowledge
Lab Analysis EPA Lab ID: ANALYTICAL LAB SVCS Analysis Record(s): 9910454003

Activity: SBCCOM
Generator: DENNIS HALL
Phone: 5-3150
e-mail: dennis.g.hall@us.army.mil

Office: RDCB-DPO-A
Generator Site: BLDGREN
Building: ECBC
Location: NA
Phone: 5-3150

Data Entry: FORD, JOHN
Phone: c443-655-7298
e-mail: john.w.ford@us.army.mil

Physical

State: Liquid
Corrosive: pH >= 12.5
Flashpoint: >= 140° F
Layers: Single
UHC's Present: No
Color:

Hazards

State Process: A03 - CAUSTIC (ALKALI) CLEANING (CLEANING & DEGREASING).
General Properties:
Oxidizer PCBs Flammable Solid Air Reactive Water Reactive
Cyanide Bearing Sulfide Bearing Explosive Radioactive

EPA Codes:

Code	Description	CAS
D002	CORROSIVE AQUEOUS LIQUID WITH PH <= 2 OR >= 12.5	
D010	SELENIUM CHARACTERISTIC WASTE / TCLP >= 1.0 PPM	7782-49-2
D018	BENZENE CHARACTERISTIC WASTE / TCLP >= 0.5 PPM	61-43-2
D022	CHLOROFORM CHARACTERISTIC WASTE / TCLP >= 6.0 PPM	67-66-3
D039	TETRACHLOROETHYLENE CHARACTERISTIC WASTE / TCLP >= 0.7 PPM	127-18-4
D040	TRICHLOROETHYLENE CHARACTERISTIC WASTE / TCLP>= 0.5 PPM	79-01-6

Chemicals

Name	CAS	Min	Max	Units
BENZENE	71-43-2	7850	7855	ppm
CHLOROFORM	67-66-3	290	295	ppm
PROPLYENE GLYCOL		40	50	%
WATER	7732-18-5	40	50	%
TETRACHLOROETHYLENE	127-18-4	31.6	31.8	ppm
SODIUM HYDROXIDE	1310-73-2	25	30	%
CHLOROBENZENE	108-90-7	12.6	12.8	ppm
TRICHLOROETHYLENE	79-01-6	8	8.1	ppm
SELENIUM	7782-49-2	2.7	2.8	mg/l

Comments

Generator Comments:

AEC Comments:

HWTS 08-Aug-2011 09:07

Comments: IEC DOES D021 APPLY ? PLEASE CONFIRM

Turn-In Document: W90B30-1180-0015 Page 1

Status

ID: W90B30-1180-0015
Status: IEC APPROVED
Date Generated: 29-Jun-2011

Fund Cite: 1WEP3D J-FLD

· Non-reusable product
[1] Posted, but not taken from Freebies List nor sold by DRMO

Activity: SBCCOM
Generator: DENNIS HALL
Phone: 5-3150
e-mail: dennis.g.hall@us.army.mil

Office: RDCB-DPO-A
Generator Site: BLDGREN
Building: ECBC
Location: NA
Phone: 5-3150

Data Entry: FORD, JOHN
Phone: c443-655-7298
e-mail: john.w.ford@us.army.mil

Receiving Site: E5844
Manager: FORD, JOHN
Phone: c443-655-7298
e-mail: john.w.ford@us.army.mil

Analysis

ID: 1180-011
Nomenclature: EDS RINSATE (223660-663)
Status: IEC APPROVED

Containers

Form Code: B119 - OTHER INORGANIC LIQUIDS (SPECIFY IN COMMENTS)

Container		Packaging			Storage				Disposal					
Barcode	HITS ID	Pack	Cntr Type	Wgt (lbs)	Type	Building	Location	Description	CLIN	Cost	Manifest ID	Line #	Shipped	Disposed
HM000223660		NC	DM55	400	TS	5844	B							
HM000223661		NC	DM55	410	TS	5844	B							
HM000223662		NC	DM55	420	TS	5844	B							
HM000223663		NC	DM55	290	TS	5844	B							

Comments

Generator Comments:

AEC Comments:

IEC Comments:

HWTS 08-Aug-2011 09:05

Analysis Record: 1180-011 - EDS RINSATE (223660-663) Page 1

Status

ID: 1180-011
Nomenclature: EDS RINSATE (223660-663)
Status: IEC APPROVED
Date Generated: 29-Jun-2011

Information From: [ ] Label
[ ] MSDS
[ ] Generator Knowledge
[ ] Lab Analysis EPA Lab ID: ANALYTICAL LAB SVCS Analysis Record(s): 35-11-223660

Activity: SBCCOM
Generator: DENNIS HALL
Phone: 5-3150
e-mail: dennis.g.hall@us.army.mil

Office: RDCB-DPO-A
Generator Site: BLDGREN
Building: ECBC
Location: NA
Phone: 5-3150

Data Entry: FORD, JOHN
Phone: c443-655-7298
e-mail: john.w.ford@us.army.mil

Physical

State: Liquid
Corrosive: pH 2.1 - 12.4
Flashpoint: >= 140° F
Layers: Single
UHC's Present: No
Color:

Hazards

State Process: A04 - FLUSH RINSING (CLEANING & DEGREASING).
General Properties:
[ ] Oxidizer [ ] PCBs [ ] Flammable Solid [ ] Air Reactive [ ] Water Reactive
[ ] Cyanide Bearing [ ] Sulfide Bearing [ ] Explosive [ ] Radioactive

EPA Codes:

Code	Description	CAS
D010	SELENIUM CHARACTERISTIC WASTE / TCLP >= 1.0 PPM	7782-49-2
D018	BENZENE CHARACTERISTIC WASTE / TCLP >= 0.5 PPM	61-43-2
D019	CARBON TETRACHLORIDE CHARACTERISTIC WASTE / TCLP >= 0.5 PPM	56-23-5
D022	CHLOROFORM CHARACTERISTIC WASTE / TCLP >= 6.0 PPM	67-66-3

Chemicals

Name	CAS	Min	Max	Units
BENZENE	71-43-2	93.2	93.4	ppm
CHLOROFORM	67-66-3	55.6	55.8	ppm
PROPOLYENE GLYCOL		45	55	%
WATER	7732-18-5	45	55	%
CARBON TETRACHLORIDE	56-23-5	6.1	6.3	ppm
SODIUM HYDORXIDE		2	5	%
SELENIUM	7782-49-2	1.6	1.8	mg/l

Comments

Generator Comments:

AEC Comments:

IEC Comments:

HWTS 08-Aug-2011 09:05

Turn-In Document: W90B30-1178-0022 Page 1

Status

ID: W90B30-1178-0022
Status: ALL CONTAINERS OFFSITE
Date Generated: 27-Jun-2011

Fund Cite: 1WEP3D J-FLD

Non-reusable product
Posted, but not taken from Freebies List nor sold by DRMO

Activity: SBCCOM
Generator: DENNIS HALL
Phone: 5-3150
e-mail: dennis.g.hall@us.army.mil

Office: RDCB-DPO-A
Generator Site: BLDGREN
Building: ECBC
Location: NA
Phone: 5-3150

Data Entry: FORD, JOHN
Phone: c443-655-7298
e-mail: john.w.ford@us.army.mil

Receiving Site: E5844
Manager: FORD, JOHN
Phone: c443-655-7298
e-mail: john.w.ford@us.army.mil

Analysis

ID: 1178-014
Nomenclature: EDS RINSATE (223664)
Status: IEC APPROVED

Containers

Form Code: B119 - OTHER INORGANIC LIQUIDS (SPECIFY IN COMMENTS)

Container		Packaging			Storage				Disposal					
Barcode	HITS ID	Pack	Cntr Type	Wgt (lbs)	Type	Building	Location	Description	CLIN	Cost	Manifest ID	Line #	Shipped	Disposed
HM000223664		NC	DM55	300	IS	E5864	ROOM 5	OTHER ORGANICS						

Comments

Generator Comments:

AEC Comments:

IEC Comments:

HWTS 08-Aug-2011 09:07

Analysis Record: 1178-014 - EDS RINSATE (223664) Page 1

Status

ID: 1178-014
Nomenclature: EDS RINSATE (223664)
Status: IEC APPROVED
Date Generated: 27-Jun-2011

Information From: Label
MSDS
Generator Knowledge
Lab Analysis EPA Lab ID: ANALYTICAL LAB SVCS Analysis Record(s): 9910454-40-11

Activity: SBCCOM
Generator: DENNIS HALL
Phone: 5-3150
e-mail: dennis.g.hall@us.army.mil

Office: RDCB-DPO-A
Generator Site: BLDGREN
Building: ECBC
Location: NA
Phone: 5-3150

Data Entry: FORD, JOHN
Phone: c443-655-7298
e-mail: john.w.ford@us.army.mil

Physical

State: Liquid
Corrosive: pH 2.1 - 12.4
Flashpoint: >= 140° F
Layers: Single
UHC's Present: No
Color:

Hazards

State Process: A04 - FLUSH RINSING (CLEANING & DEGREASING).
General Properties:
Oxidizer PCBs Flammable Solid Air Reactive Water Reactive
Cyanide Bearing Sulfide Bearing Explosive Radioactive

EPA Codes:

Code	Description	CAS
D018	BENZENE CHARACTERISTIC WASTE / TCLP >= 0.5 PPM	61-43-2

Chemicals

Name	CAS	Min	Max	Units
PROPOLYENE GLYCOL		45	50	%
WATER	7732-18-5	45	50	%
BENZENE	71-43-2	34	36	mg/l
SODIUM HYDROXIDE	1310-73-2	5	10	%

Comments

Generator Comments:

AEC Comments:

IEC Comments:

HWTS 08-Aug-2011 09:07

Turn-In Document: W90B30-1152-0001 Page 1

Status

ID: W90B30-1152-0001
Status: ALL CONTAINERS OFFSITE
Date Generated: 01-Jun-2011

Fund Cite: 1WEP3D J-FLD

☐ Non-reusable product
☐ Posted, but not taken from Freebies List nor sold by DRMO

Activity: SBCCOM
Generator: DENNIS HALL
Phone: 5-3150
e-mail: dennis.g.hall@us.army.mil

Office: RDCB-DPO-A
Generator Site: BLDGREN
Building: ECBC
Location: NA
Phone: 5-3150

Data Entry: FORD, JOHN
Phone: c443-655-7298
e-mail: john.w.ford@us.army.mil

Receiving Site: E5844
Manager: FORD, JOHN
Phone: c443-655-7298
e-mail: john.w.ford@us.army.mil

Analysis

ID: 1144-003
Nomenclature: PPE W/BENZENE RESIDUE
Status: IEC APPROVED

Containers

Form Code: B319 - OTHER WASTE INORGANIC SOLIDS (SPECIFY IN COMMENTS)

Container		Packaging			Storage				Disposal					
Barcode	HITS ID	Pack	Cntr Type	Wgt (lbs)	Type	Building	Location	Description	CLIN	Cost	Manifest ID	Line #	Shipped	Disposed
HM000223666		NC	DP55	44	IS	E5864	ROOM 5	OTHER ORGANICS						

Comments

Generator Comments:

AEC Comments:

IEC Comments:

HWTS 08-Aug-2011 09:09

Analysis Record: 1144-003 - PPE W/BENZENE RESIDUE

Page 1

Status

ID: 1144-003
Nomenclature: PPE W/BENZENE RESIDUE
Status: IEC APPROVED
Date Generated: 24-May-2011

Information From: Label
MSDS
Generator Knowledge
Lab Analysis

Activity: SBCCOM
Generator: DENNIS HALL
Phone: 5-3150
e-mail: dennis.g.hall@us.army.mil

Office: RDCB-DPO-A
Generator Site: BLDGREN
Building: ECBC
Location: NA
Phone: 5-3150

Data Entry: FORD, JOHN
Phone: c443-655-7298
e-mail: john.w.ford@us.army.mil

Physical

State: Solid
Corrosive: NA
Flashpoint:
Layers: Single
UHC's Present:
Color:

Hazards

State Process: A91 - CLOTHING AND PERSONAL PROTECTIVE EQUIPMENT (OTHER PROCESSES)
General Properties:

Oxidizer	PCBs	Flammable Solid	Air Reactive	Water Reactive
Cyanide Bearing	Sulfide Bearing	Explosive	Radioactive	

EPA Codes:

Code	Description	CAS
D018	BENZENE CHARACTERISTIC WASTE / TCLP >= 0.5 PPM	61-43-2

Chemicals

Name	CAS	Min	Max	Units
PPE (PLASTIC/TYVEK & RUBBER)		100	100	%
BENZENE	71-43-2	0.5	0.7	ppm

Comments

Generator Comments:

AEC Comments: item containing benzene blown and benzene trapped in items

IEC Comments:

HWTS 08-Aug-2011 09:09

Turn-In Document: W90B30-1152-0003 Page 1

Status

ID: W90B30-1152-0003
Status: ALL CONTAINERS OFFSITE
Date Generated: 01-Jun-2011
AEC Approved: 01-Jun-2011
IEC Approved: 06-Jun-2011

Fund Cite: 1WEP3D J-FLD

Non-reusable product
Posted, but not taken from Freebies List nor sold by DRMO

Activity: SBCCOM
Generator: DENNIS HALL
Phone: 5-3150
e-mail: dennis.g.hall@us.army.mil

Office: RDCB-DPO-A
Generator Site: BLDGREN
Building: ECBC
Location: HA
Phone: 5-3150

Data Entry: FORD, JOHN
Phone: c443-655-7298
e-mail: john.w.ford@us.army.mil

Receiving Site: E5844
Manager: FORD, JOHN
Phone: c443-655-7298
e-mail: john.w.ford@us.army.mil

Analysis

ID: 1144-002
Nomenclature: ASZM TEDA CARBON FILTER W/BENZENE
Status: IEC APPROVED

Containers

Form Code: B310 - SPENT SOLID FILTERS OR ADSORBENTS

Container		Packaging			Storage					Disposal				
Barcode	HRTS ID	Pack	Cntr Type	Wgt (lbs)	Type	Building	Location	Description	CLIN	Cost	Manifest ID	Line #	Shipped	Disposed
HM000223667		NC	EA	15	IS	E5865	ROOM 7	N00014D6039XXX						

Comments

Generator Comments:

AEC Comments:

IEC Comments:

HWTS 08-Aug-2011 09:09

Analysis Record: 1144-002 - ASZM TEDA CARBON FILTER W/BENZENE

Status

ID: 1144-002
Nomenclature: ASZM TEDA CARBON FILTER W/BENZENE
Status: IEC APPROVED
Date Generated: 24-May-2011

Information From: Label
MSDS
Generator Knowledge
Lab Analysis

Activity: SBCCOM
Generator: DENNIS HALL
Phone: 5-3150
e-mail: dennis.g.hall@us.army.mil

Office: RDCB-DPO-A
Generator Site: BLDGREN
Building: ECBC
Location: NA
Phone: 5-3150

Data Entry: FORD, JOHN
Phone: c443-655-7298
e-mail: john.w.ford@us.army.mil

Physical

State: Solid
Corrosive: NA
Flashpoint:
Layers: Single
UHC's Present:
Color:

Hazards

State Process: A55 - FILTER/BATTERY REPLACEMENT (ONE-TIME & INTERMITTENT PROCESS.
General Properties:

☐ Oxidizer ☐ PCBs ☐ Flammable Solid ☐ Air Reactive ☐ Water Reactive
☐ Cyanide Bearing ☐ Sulfide Bearing ☐ Explosive ☐ Radioactive

EPA Codes:

Code	Description	CAS
D018	BENZENE CHARACTERISTIC WASTE / TCLP >= 0.5 PPM	61-43-2

Chemicals

Name	CAS	Min	Max	Units
METAL HOUSING		30	75	%
ASZM TEDA CARBON		25	35	%
BENZENE	71-43-2	0.5	0.7	ppm

Comments

Generator Comments:

AEC Comments: benzene item blown and trapped in items in the turn in

IEC Comments:

HWTS 08-Aug-2011 09:09

Turn-In Document: W90B30-1161-0005 Page 1

Status

ID: W90B30-1161-0005
Status: IEC APPROVED
Date Generated: 10-Jun-2011
AEC Approved: 10-Jun-2011
IEC Approved: 13-Jun-2011

Fund Cite: 1WEP3D J-FLD

Non-reusable product
Posted, but not taken from Freebies List nor sold by DRMO

Activity: SBCCOM
Generator: DENNIS HALL
Phone: 5-3150
e-mail: dennis.g.hall@us.army.mil

Office: RDCB-DPO-A
Generator Site: BLDGREN
Building: ECBC
Location: NA
Phone: 5-3150

Data Entry: FORD, JOHN
Phone: c443-655-7298
e-mail: john.w.ford@us.army.mil

Receiving Site: E5844
Manager: FORD, JOHN
Phone: c443-655-7298
e-mail: john.w.ford@us.army.mil

Analysis

ID: 1144-002
Nomenclature: ASZM TEDA CARBON FILTER W/BENZENE
Status: IEC APPROVED

Containers

Form Code: B310 - SPENT SOLID FILTERS OR ADSORBENTS

Container		Packaging			Storage					Disposal				
Barcode	HITS ID	Pack	Cntr Type	Wgt (lbs)	Type	Building	Location	Description	CLIN	Cost	Manifest ID	Line #	Shipped	Disposed
HM000223668		NC	DM55	72	IS	E5865	ROOM 7	MD02/MD03XXX						
HM000223677		NC	EA	72	IS	E5865	ROOM 7	MD02/MD03XXX						
HM000233687		NC	DM55	142	TS	5844	B							

Comments

Generator Comments: 223668 & 223677 WERE COMBINED INTO ONE DM55 WITH A TOTAL WEIGHT OF 144LBS.

AEC Comments:

IEC Comments:

HWTS 08-Aug-2011 09:05

Analysis Record: 1144-002 - ASZM TEDA CARBON FILTER W/BENZENE

Page 2

Status

ID: 1144-002
Nomenclature: ASZM TEDA CARBON FILTER W/BENZENE
Status: IEC APPROVED
Date Generated: 24-May-2011

Information From: Label
MSDS
Generator Knowledge
Lab Analysis

Activity: SBCCOM
Generator: DENNIS HALL
Phone: 5-3150
e-mail: dennis.g.hall@us.army.mil

Office: RDCB-DPO-A
Generator Site: BLDGREN
Building: ECBC
Location: NA
Phone: 5-3150

Data Entry: FORD, JOHN
Phone: c443-655-7298
e-mail: john.w.ford@us.army.mil

Physical

State: Solid
Corrosive: NA
Flashpoint:
Layers: Single
UHC's Present:
Color:

Hazards

State Process: A55 - FILTER/BATTERY REPLACEMENT (ONE-TIME & INTERMITTENT PROCESS.
General Properties:
Oxidizer, PCBs, Flammable Solid, Air Reactive, Water Reactive
Cyanide Bearing, Sulfide Bearing, Explosive, Radioactive

EPA Codes:

Code	Description	CAS
D018	BENZENE CHARACTERISTIC WASTE / TCLP >= 0.5 PPM	61-43-2

Chemicals

Name	CAS	Min	Max	Units
METAL HOUSING		30	75	%
ASZM TEDA CARBON		25	35	%
BENZENE	71-43-2	0.5	0.7	ppm

Comments

Generator Comments:

AEC Comments: benzene item blown and trapped in items in the turn in

IEC Comments:

HWTS 08-Aug-2011 09:06

Turn-In Document: W90B30-1180-0014 Page 1

Status

ID: W90B30-1180-0014
Status: IEC APPROVED
Date Generated: 29-Jun-2011

Fund Cite: 1WEP3D J-FLD

Non-reusable product
Posted, but not taken from Freebies List nor sold by DRMO

Activity: SBCCOM
Generator: DENNIS HALL
Phone: 5-3150
e-mail: dennis.g.hall@us.army.mil

Office: RDCB-DPO-A
Generator Site: BLDGREN
Building: ECBC
Location: NA
Phone: 5-3150

Data Entry: FORD, JOHN
Phone: c443-655-7298
e-mail: john.w.ford@us.army.mil

Receiving Site: E5844
Manager: FORD, JOHN
Phone: c443-655-7298
e-mail: john.w.ford@us.army.mil

Analysis

ID: 1180-010
Nomenclature: EDS RINSATE (223670)
Status: IEC APPROVED

Containers

Form Code: B110 - CAUSTIC AQUEOUS WASTE

Container		Packaging			Storage				Disposal					
Barcode	HITS ID	Pack	Cntr Type	Wgt (lbs)	Type	Building	Location	Description	CLIN	Cost	Manifest ID	Line #	Shipped	Disposed
HM000223670		NC	DM55	310	TS	5844	B							

Comments

Generator Comments:

AEC Comments:

IEC Comments:

HWTS 08-Aug-2011 09:05

Analysis Record: 1180-010 - EDS RINSATE (223670) Page 1

Status

ID: 1180-010
Nomenclature: EDS RINSATE (223670)
Status: IEC APPROVED
Date Generated: 29-Jun-2011

Information From: Label
MSDS
Generator Knowledge
Lab Analysis EPA Lab ID: ANALYTAICAL LAB SVCS Analysis Record(s): 38-11-223670

Activity: SBCCOM
Generator: DENNIS HALL
Phone: 5-3150
e-mail: dennis.g.hall@us.army.mil

Office: RDCB-DPO-A
Generator Site: BLDGREN
Building: ECBC
Location: NA
Phone: 5-3150

Data Entry: FORD, JOHN
Phone: c443-655-7298
e-mail: john.w.ford@us.army.mil

Physical

State: Liquid
Corrosive: pH >= 12.5
Flashpoint: >= 140° F
Layers: Single
UHC's Present: No
Color:

Hazards

State Process: A04 - FLUSH RINSING (CLEANING & DEGREASING).
General Properties:
Oxidizer PCBs Flammable Solid Air Reactive Water Reactive
Cyanide Bearing Sulfide Bearing Explosive Radioactive

EPA Codes:

Code	Description	CAS
D002	CORROSIVE AQUEOUS LIQUID WITH PH <= 2 OR >= 12.5	
D018	BENZENE CHARACTERISTIC WASTE / TCLP >= 0.5 PPM	61-43-2
D019	CARBON TETRACHLORIDE CHARACTERISTIC WASTE / TCLP >= 0.5 PPM	56-23-5
D022	CHLOROFORM CHARACTERISTIC WASTE / TCLP >= 6.0 PPM	67-66-3
D039	TETRACHLOROETHYLENE CHARACTERISTIC WASTE / TCLP >= 0.7 PPM	127-18-4

Chemicals

Name	CAS	Min	Max	Units
BENZENE	71-43-2	97.2	97.4	ppm
WATER	7732-18-5	35	45	%
POLYETHYLENE GLYCOL	68130-99-4	35	40	%
SODIUM HYDROXIDE	1310-73-2	35	40	%
CARBON TETRACHLORIDE		19.2	19.4	ppm
CHLOROFORM	67-66-3	17.1	17.2	ppm
TETRACHLOROETHENE		10.4	10.6	ppm

Comments

Generator Comments:

AEC Comments:

IEC Comments:

HWTS 08-Aug-2011 09:05

Turn-In Document: W90B30-1180-0013 Page 1

Status

ID: W90B30-1180-0013
Status: IEC APPROVED
Date Generated: 29-Jun-2011

Fund Site: 1WEP3D J-FLD

☐ Non-reusable product
☐ Posted, but not taken from Freebies List nor sold by DRMO

Activity: SBCCOM
Generator: DENNIS HALL
Phone: 5-3150
e-mail: dennis.g.hall@us.army.mil

Office: RDCB-DPO-A
Generator Site: BLDGREN
Building: ECBC
Location: NA
Phone: 5-3150

Data Entry: FORD, JOHN
Phone: c443-655-7298
e-mail: john.w.ford@us.army.mil

Receiving Site E5844
Manager: FORD, JOHN
Phone: c443-655-7298
e-mail: john.w.ford@us.army.mil

Analysis

ID: 1180-009
Nomenclature: EDS RINSATE (223671-674)
Status: IEC APPROVED

Containers

Form Code: B110 - CAUSTIC AQUEOUS WASTE

Container		Packaging			Storage				Disposal					
Barcode	HITS ID	Pack	Cntr Type	Wgt (lbs)	Type	Building	Location	Description	CLIN	Cost	Manifest ID	Line #	Shipped	Disposed
HM000223671		NC	DM55	400	TS	5844	B							
HM000223672		NC	DM55	400	TS	5844	B							
HM000223673		NC	DM55	265	TS	5844	B							
HM000223674		NC	DM55	268	TS	5844	B							

Comments

Generator Comments:

AEC Comments:

IEC Comments:

HWTS 08-Aug-2011 09:05

Analysis Record: 1180-009 - EDS RINSATE (223671-674) Page 1

Status

ID: 1180-009
Nomenclature: EDS RINSATE (223671-674)
Status: IEC APPROVED
Date Generated: 29-Jun-2011

Information From: ☐ Label
☐ MSDS
☐ Generator Knowledge
☐ Lab Analysis EPA Lab ID: ANALYTICAL LAB SVCS Analysis Record(s): 38-11-223674

Activity: SBCCOM
Generator: DENNIS HALL
Phone: 5-3150
e-mail: dennis.g.hall@us.army.mil

Office: RDCB-DPO-A
Generator Site: BLDGREN
Building: ECBC
Location: NA
Phone: 5-3150

Data Entry: FORD, JOHN
Phone: c443-655-7298
e-mail: john.w.ford@us.army.mil

Physical

State: Liquid
Corrosive: pH >= 12.5
Flashpoint: >= 140° F
Layers: Single
UHC's Present: No
Color:

Hazards

State Process: A04 - FLUSH RINSING (CLEANING & DEGREASING).
General Properties:
☐ Oxidizer ☐ PCBs ☐ Flammable Solid ☐ Air Reactive ☐ Water Reactive
☐ Cyanide Bearing ☐ Sulfide Bearing ☐ Explosive ☐ Radioactive

EPA Codes:

Code	Description	CAS
D002	CORROSIVE AQUEOUS LIQUID WITH PH <= 2 OR >= 12.5	
D018	BENZENE CHARACTERISTIC WASTE / TCLP >= 0.5 PPM	61-43-2
D019	CARBON TETRACHLORIDE CHARACTERISTIC WASTE / TCLP >= 0.5 PPM	56-23-5
D022	CHLOROFORM CHARACTERISTIC WASTE / TCLP >= 6.0 PPM	67-66-3
D039	TETRACHLOROETHYLENE CHARACTERISTIC WASTE / TCLP >= 0.7 PPM	127-18-4

Chemicals

Name	CAS	Min	Max	Units
BENZENE	71-43-2	75.9	76	ppm
TETRACHLOROETHENE		56	56.2	ppm
PROPOLYENE GLYCOL		35	40	%
SODIUM HYDROXIDE	1310-73-2	35	40	%
WATER	7732-18-5	35	40	%
CHLOROFORM	67-66-3	27.1	27.3	ppm
CARBON TETRACHLORIDE	56-23-5	13.4	13.6	ppm

Comments

Generator Comments:

AEC Comments:

IEC Comments:

HWTS 08-Aug-2011 09:05

Turn-In Document: W90B30-1153-0019 Page 1

Status

ID: W90B30-1153-0019
Status: ALL CONTAINERS OFFSITE
Date Generated: 02-Jun-2011

Fund Cite: 1WCP3D J-FLD

Non-reusable product
Posted, but not taken from Freebies List nor sold by DRMO

Activity: SBCCOM
Generator: DENNIS HALL
Phone: 5 3150
e-mail: dennis.g.hall@us.army.mil

Office: RDCB-DPO-A
Generator Site: BLDGREN
Building: ECBC
Location: NA
Phone: 5-3150

Data Entry: FORD, JOHN
Phone: c443-655-7298
e-mail: john.w.ford@us.army.mil

Receiving Site: E5844
Manager: FORD, JOHN
Phone: c443-655-7298
e-mail: john.w.ford@us.army.mil

Analysis

ID: 1144-003
Nomenclature: PPE W/BENZENE RESIDUE
Status: IEC APPROVED

Containers

Form Code: B319 - OTHER WASTE INORGANIC SOLIDS (SPECIFY IN COMMENTS)

Container		Packaging			Storage				Disposal					
Barcode	HITS ID	Pack	Cntr Type	Wgt (lbs)	Type	Building	Location	Description	CLIN	Cost	Manifest ID	Line #	Shipped	Disposed
HM000223676		NC	DP55	50	IS	E5864	ROOM 5	OTHER ORGANICS						

Comments

Generator Comments:

AEC Comments:

IEC Comments:

HWTS 08-Aug-2011 09:09

Analysis Record: 1144-003 - PPE W/BENZENE RESIDUE

Status

ID: 1144-003
Nomenclature: PPE W/BENZENE RESIDUE
Status: IEC APPROVED
Date Generated: 24-May-2011

Information From: Label
MSDS
Generator Knowledge
Lab Analysis

Activity: SBCCOM
Generator: DENNIS HALL
Phone: 5-3150
e-mail: dennis.g.hall@us.army.mil

Office: RDCB-DPO-A
Generator Site: BLDGREN
Building: ECBC
Location: NA
Phone: 5-3150

Data Entry: FORD, JOHN
Phone: 0443-655-7298
e-mail: john.w.ford@us.army.mil

Physical

State: Solid
Corrosive: NA
Flashpoint:
Layers: Single
UHC's Present:
Color:

Hazards

State Process: A91 - CLOTHING AND PERSONAL PROTECTIVE EQUIPMENT (OTHER PROCESSES)
General Properties:

Oxidizer	PCBs	Flammable Solid	Air Reactive	Water Reactive
Cyanide Bearing	Sulfide Bearing	Explosive	Radioactive	

EPA Codes:

Code	Description	CAS
D018	BENZENE CHARACTERISTIC WASTE / TCLP >= 0.5 PPM	61-43-2

Chemicals

Name	CAS	Min	Max	Units
PPE (PLASTIC/TYVEK & RUBBER)		100	100	%
BENZENE	71-43-2	0.5	0.7	ppm

Comments

Generator Comments:

AEC Comments: item containing benzene blown and benzene trapped in items

IEC Comments:

HWTS 08-Aug-2011 09:09

Turn-In Document: W90B30-1164-0011 Page 1

Status

ID: W90B30-1164-0011
Status: ALL CONTAINERS OFFSITE
Date Generated: 13-Jun-2011

Fund Cite: 1WEP3D J-FLD

Non-reusable product
Posted, but not taken from Freebies List nor sold by DRMO

Activity: SBCCOM
Generator: DENNIS HALL
Phone: 5-3150
e-mail: dennis.g.hall@us.army.mil

Office: RDCB-DPO-A
Generator Site: BLDGREN
Building: ECBC
Location: NA
Phone: 5-3150

Data Entry: FORD, JOHN
Phone: c443-655-7298
e-mail: john.w.ford@us.army.mil

Receiving Site: F5844
Manager: FORD, JOHN
Phone: c443-655-7298
e-mail: john.w.ford@us.army.mil

Analysis

ID: 1144-003
Nomenclature: PPE W/BENZENE RESIDUE
Status: IEC APPROVED

Containers

Form Code: B319 - OTHER WASTE INORGANIC SOLIDS (SPECIFY IN COMMENTS)

Container		Packaging			Storage				Disposal					
Barcode	HITS ID	Pack	Cntr Type	Wgt (lbs)	Type	Building	Location	Description	CLIN	Cost	Manifest ID	Line #	Shipped	Disposed
HM000221861		NC	DF55	62	IS	E5864	ROOM 5	OTHER ORGANICS						

Comments

Generator Comments:

AEC Comments:

IEC Comments:

HWTS 08-Aug-2011 09:08

Analysis Record: 1144-003 - PPE W/BENZENE RESIDUE

Page 1

Status

ID: 1144-003
Nomenclature: PPE W/BENZENE RESIDUE
Status: IEC APPROVED
Date Generated: 24-May-2011

Information From: Label
MSDS
Generator Knowledge
Lab Analysis

Activity: SBCCOM
Generator: DENNIS HALL
Phone: 5-3150
e-mail: dennis.g.hall@us.army.mil

Office: RDCB-DPO-A
Generator Site: BLDGREN
Building: ECBC
Location: NA
Phone: 5-3150

Data Entry: FORD, JOHN
Phone: c443-655-7298
e-mail: john.w.ford@us.army.mil

Physical

State: Solid
Corrosive: NA
Flashpoint:
Layers: Single
UHC's Present:
Color:

Hazards

State Process: A91 - CLOTHING AND PERSONAL PROTECTIVE EQUIPMENT (OTHER PROCESSES)
General Properties:

- [ ] Oxidizer
- [ ] PCBs
- [ ] Flammable Solid
- [ ] Air Reactive
- [ ] Water Reactive
- [ ] Cyanide Bearing
- [ ] Sulfide Bearing
- [ ] Explosive
- [ ] Radioactive

EPA Codes:

Code	Description	CAS
D018	BENZENE CHARACTERISTIC WASTE / TCLP >= 0.5 PPM	61-43-2

Chemicals

Name	CAS	Min	Max	Units
PPE (PLASTIC/TYVEK & RUBBER)		100	100	%
BENZENE	71-43-2	0.5	0.7	ppm

Comments

Generator Comments:

AEC Comments: item containing benzene blown and benzene trapped in items

IEC Comments:

HWTS 08-Aug-2011 09:08

Turn-In Document: W90B30-1178-0027 Page 1

Status

ID: W90B30-1178-0027
Status: ALL CONTAINERS OFFSITE
Date Generated: 27-Jun-2011

Fund Cite: 1WEP3D J-FLD

Non-reusable product
Posted, but not taken from Freebies List nor sold by DRMO

Activity: SBCCOM
Generator: DENNIS HALL
Phone: 5-3150
e-mail: dennis.g.hall@us.army.mil

Office: RDCB-DPO-A
Generator Site: BLDGREN
Building: ECBC
Location: NA
Phone: 5-3150

Data Entry: FORD, JOHN
Phone: c443-655-7298
e-mail: john.w.ford@us.army.mil

Receiving Site: E5844
Manager: FORD, JOHN
Phone: c443-655-7298
e-mail: john.w.ford@us.army.mil

Analysis

ID: 1178-017
Nomenclature: EDS RINSATE (223681)
Status: IEC APPROVED

Containers

Form Code: B119 - OTHER INORGANIC LIQUIDS (SPECIFY IN COMMENTS)

Container		Packaging			Storage				Disposal					
Barcode	HITS ID	Pack	Cntr Type	Wgt (lbs)	Type	Building	Location	Description	CLIN	Cost	Manifest ID	Line #	Shipped	Disposed
HM000223681		NC	DM55	280	IS	E5864	ROOM 5	OTHER ORGANICS						
HM000223682		NC	DM55	320	IS	E5864	ROOM 5	OTHER ORGANICS						
HM000223683		NC	DM55	300	IS	E5864	ROOM 5	OTHER ORGANICS						
HM000223684		NC	DM55	260	IS	E5864	ROOM 5	OTHER ORGANICS						

Comments

Generator Comments:

AEC Comments:

IEC Comments:

HWTS 08-Aug-2011 09:07

Analysis Record: 1178-017 - EDS RINSATE (223681) Page 1

Status

ID: 1178-017
Nomenclature: EDS RINSATE (223681)
Status: IEC APPROVED
Date Generated: 27-Jun-2011

Information From: Label
MSDS
Generator Knowledge
Lab Analysis FPA Lab ID: ANALYTICAL LAB SVCS Analysis Record(s): 9910454002

Activity: SBCCOM
Generator: DENNIS HALL
Phone: 5-3150
e-mail: dennis.g.hall@us.army.mil

Office: RDCB-DPO-A
Generator Site: BLDGREN
Building: ECBC
Location: NA
Phone: 5-3150

Data Entry: FORD, JOHN
Phone: c443-655-7298
e-mail: john.w.ford@us.army.mil

Physical

State: Liquid
Corrosive: pH 2.1 - 12.4
Flashpoint: >= 140° F
Layers: Single
UHC's Present: No
Color:

Hazards

State Process: A04 - FLUSH RINSING (CLEANING & DEGREASING).
General Properties:
☐ Oxidizer ☐ PCBs ☐ Flammable Solid ☐ Air Reactive ☐ Water Reactive
☐ Cyanide Bearing ☐ Sulfide Bearing ☐ Explosive ☐ Radioactive

EPA Codes:

Code	Description	CAS
D018	BENZENE CHARACTERISTIC WASTE / TCLP >= 0.5 PPM	61-43-2
D022	CHLOROFORM CHARACTERISTIC WASTE / TCLP >= 6.0 PPM	67-66-3

Chemicals

Name	CAS	Min	Max	Units
BENZENE	71-43-2	146	150	ppm
CHLOROFORM	67-66-3	81	83	ppm
WATER	7732-18-5	45	55	%
PROPLYENE GLYCOL		40	50	%

Comments

Generator Comments:

AEC Comments:

IEC Comments:

HWTS 08-Aug-2011 09:07

Turn-In Document: W90B30-1161-0002 Page 1

Status

ID: W90B30-1161-0002
Status: ALL CONTAINERS OFFSITE
Date Generated: 10-Jun-2011

Fund Site: 1WEP3D J-FLD

Non-reusable product
Posted, but not taken from Freebies List nor sold by DRMO

Activity: SBCCOM
Generator: DENNIS HALL
Phone: 5-3150
e-mail: dennis.g.hall@us.army.mil

Office: RDCB-DPO-A
Generator Site: BLDGREN
Building: ECBC
Location: NA
Phone: 5-3150

Data Entry: FORD, JOHN
Phone: c443-655-7298
e-mail: john.w.ford@us.army.mil

Receiving Site: E5844
Manager: FORD, JOHN
Phone: c443-655-7298
e-mail: john.w.ford@us.army.mil

Analysis

ID: 1144-003
Nomenclature: PPE W/BENZENE RESIDUE
Status: IEC APPROVED

Containers

Form Code: B319 - OTHER WASTE INORGANIC SOLIDS (SPECIFY IN COMMENTS)

Container		Packaging			Storage				Disposal					
Barcode	HITS ID	Pack	Cntr Type	Wgt (lbs)	Type	Building	Location	Description	CLIN	Cost	Manifest ID	Line #	Shipped	Disposed
HM000223686		NC	DP55	50	IS	E5854	ROOM 5	OTHER ORGANICS						

Comments

Generator Comments:

AEC Comments:

IEC Comments:

HWTS 08-Aug-2011 09:08

Analysis Record: 1144-003 - PPE W/BENZENE RESIDUE

Page 1

Status

ID: 1144-003
Nomenclature: PPE W/BENZENE RESIDUE
Status: IEC APPROVED
Date Generated: 24-May-2011

Information From: ☐ Label
☐ MSDS
Generator Knowledge
Lab Analysis

Activity: SBCCOM
Generator: DENNIS HALL
Phone: 5-3150
e-mail: dennis.g.hall@us.army.mil

Office: RDCB-DPO-A
Generator Site: BLDGREN
Building: ECBC
Location: NA
Phone: 5-3150

Data Entry: FORD, JOHN
Phone: c443-655-7298
e-mail: john.w.ford@us.army.mil

Physical

State: Solid
Corrosive: NA
Flashpoint:
Layers: Single
UHC's Present:
Color:

Hazards

State Process: A91 - CLOTHING AND PERSONAL PROTECTIVE EQUIPMENT (OTHER PROCESSES)
General Properties:
☐ Oxidizer ☐ PCBs ☐ Flammable Solid ☐ Air Reactive ☐ Water Reactive
☐ Cyanide Bearing ☐ Sulfide Bearing ☐ Explosive ☐ Radioactive

EPA Codes:

Code	Description	CAS
D018	BENZENE CHARACTERISTIC WASTE / TCLP >= 0.5 PPM	61-43-2

Chemicals

Name	CAS	Min	Max	Units
PPE (PLASTIC/TYVEK & RUBBER)		100	100	%
BENZENE	71-43-2	0.5	0.7	ppm

Comments

Generator Comments:

AEC Comments: item containing benzene blown and benzene trapped in items

IEC Comments:

HWTS 08-Aug-2011 09:08

Turn-In Document: W90B30-1161-0005 **Page 1**

Status

ID: **W90B30-1161-0005**
Status: **ALL CONTAINERS OFFSITE**
Date Generated: **10-Jun-2011**
AEC Approved: **10-Jun-2011**
IEC Approved: **13-Jun-2011**

Fund Cite: **1WEP3D J-FLD**

☒ Non-reusable product
☐ Posted, but not taken from Freebies List nor sold by DRMO

Activity: **SBCCOM**
Generator: **DENNIS HALL**
Phone: **5-3150**
e-mail: **dennis.g.hall@us.army.mil**

Office: **RDCB-DPO-A**
Generator Site: **BLDGREN**
Building: **ECBC**
Location: **NA**
Phone: **5-3150**

Data Entry: **FORD, JOHN**
Phone: **c443-655-7298**
e-mail: **john.w.ford@us.army.mil**

Receiving Site: **E5844**
Manager: **FORD, JOHN**
Phone: **c443-655-7298**
e-mail: **john.w.ford@us.army.mil**

Analysis

ID: **1144-002**
Nomenclature: **ASZM TEDA CARBON FILTER W/BENZENE**
Status: **IEC APPROVED**

Containers

Form Code: **B310 - SPENT SOLID FILTERS OR ADSORBENTS**

Container		Packaging			Storage				Disposal					
Barcode	HITS ID	Pack	Cntr Type	Wgt (lbs)	Type	Building	Location	Description	CLIN	Cost	Manifest ID	Line #	Shipped	Disposed
HM000223668		LP	DP55	72	OS	OFFSITE	TXD000838896	PORT ARTHUR - ONYX ENV	119AB	64.94	000184966 VES	5/40	26-Sep-2011	
HM000223677		LP	EA	72	OS	OFFSITE	TXD000838896	PORT ARTHUR - ONYX ENV	119AB	64.94	000184966 VES	5/40	26-Sep-2011	
HM000223687		NC	DP55	142	OS	OFFSITE	TXD000838896	PORT ARTHUR - ONYX ENV	119AB	128.08	000184966 VES	5/40	26-Sep-2011	

Comments

Generator Comments: **223668 & 223677 WERE COMBINED INTO ONE DM55 WITH A TOTAL WEIGHT OF 144LBS.**

AEC Comments:

IEC Comments:

HWTS 27-Sep-2011 11:10

Analysis Record: 1144-002 - ASZM TEDA CARBON FILTER W/BENZENE

Status

ID: 1144-002
Nomenclature: ASZM TEDA CARBON FILTER W/BENZENE
Status: IEC APPROVED
Date Generated: 24-May-2011

Information From:
- ☐ Label
- ☐ MSDS
- ☒ Generator Knowledge
- ☐ Lab Analysis

Activity: SBCCOM
Generator: DENNIS HALL
Phone: 5-3150
e-mail: dennis.g.hall@us.army.mil

Office: RDCB-DPO-A
Generator Site: BLDGREN
Building: ECBC
Location: NA
Phone: 5-3150

Data Entry: FORD, JOHN
Phone: c443-655-7298
e-mail: john.w.ford@us.army.mil

Physical

State: Solid
Corrosive: NA
Flashpoint:
Layers: Single
UHC's Present:
Color:

Hazards

State Process: A55 - FILTER/BATTERY REPLACEMENT (ONE-TIME & INTERMITTENT PROCESS.
General Properties:
- ☐ Oxidizer
- ☐ Cyanide Bearing
- ☐ PCBs
- ☐ Sulfide Bearing
- ☐ Flammable Solid
- ☐ Explosive
- ☐ Air Reactive
- ☐ Radioactive
- ☐ Water Reactive

EPA Codes:

Code	Description	CAS
D018	BENZENE CHARACTERISTIC WASTE / TCLP >= 0.5 PPM	61-43-2

Chemicals

Name	CAS	Min	Max	Units
METAL HOUSING		30	75	%
ASZM TEDA CARBON		25	35	%
BENZENE	71-43-2	0.5	0.7	ppm

Comments

Generator Comments:

AEC Comments: benzene item blown and trapped in items in the turn in

IEC Comments:

HWTS 27-Sep-2011 11:10

Turn-In Document: W90B30-1179-0002 Page 1

Status

ID: W90B30-1179-0002
Status: IEC APPROVED
Date Generated: 28-Jun-2011

Fund Cite: 1WEP3D J-FLD

Non-reusable product
Posted, but not taken from Freebies List nor sold by DRMO

Activity: SBCCOM
Generator: DENNIS HALL
Phone: 5-3150
e-mail: dennis.g.hall@us.army.mil

Office: RDCB-DPO-A
Generator Site: BLDGREN
Building: ECBC
Location: NA
Phone: 5-3150

Data Entry: FORD, JOHN
Phone: c443-655-7298
e-mail: john.w.ford@us.army.mil

Receiving Site: E5844
Manager: FORD, JOHN
Phone: c443-655-7298
e-mail: john.w.ford@us.army.mil

Analysis

ID: 1179-001
Nomenclature: EDS RINSATE (223689)
Status: IEC APPROVED

Containers

Form Code: B119 - OTHER INORGANIC LIQUIDS (SPECIFY IN COMMENTS)

Container		Packaging			Storage				Disposal					
Barcode	HITS ID	Pack	Cntr Type	Wgt (lbs)	Type	Building	Location	Description	CLIN	Cost	Manifest ID	Line #	Shipped	Disposed
HM000223689		NC	DM55	305	TS	5844	B							

Comments

Generator Comments:

AEC Comments:

IEC Comments:

HWTS 08-Aug-2011 09:05

Analysis Record: 1179-001 - EDS RINSATE (223689)

Page 1

Status

ID: 1179-001
Nomenclature: EDS RINSATE (223689)
Status: IEC APPROVED
Date Generated: 28-Jun-2011

Information From:
- [ ] Label
- [ ] MSDS
- [ ] Generator Knowledge
- [ ] Lab Analysis EPA Lab ID: ANALYTICAL LAB SVCS Analysis Record(s): 9910453-47-11

Activity: SBCCOM
Generator: DENNIS HALL
Phone: 5-3150
e-mail: dennis.g.hall@us.army.mil

Office: RDCB-DPO-A
Generator Site: BLDGREN
Building: ECBC
Location: NA
Phone: 5-3150

Data Entry: FORD, JOHN
Phone: c443-655-7298
e-mail: john.w.ford@us.army.mil

Physical

State: Liquid
Corrosive: pH 2.1 - 12.4
Flashpoint: >= 140° F
Layers: Single
UHC's Present: No
Color:

Hazards

State Process: A04 - FLUSH RINSING (CLEANING & DEGREASING).
General Properties:
- [ ] Oxidizer
- [ ] PCBs
- [ ] Flammable Solid
- [ ] Air Reactive
- [ ] Water Reactive
- [ ] Cyanide Bearing
- [ ] Sulfide Bearing
- [ ] Explosive
- [ ] Radioactive

EPA Codes:

Code	Description	CAS
D018	BENZENE CHARACTERISTIC WASTE / TCLP >= 0.5 PPM	61-43-2
D022	CHLOROFORM CHARACTERISTIC WASTE / TCLP >= 6.0 PPM	67-66-3

Chemicals

Name	CAS	Min	Max	Units
WATER	7732-18-5	50	55	%
PROPOLYENE GLYCOL		40	50	%
CHLOROFORM	67-66-3	47.6	48	ppm
BENZENE	71-43-2	44.9	45	ppm
SODIUM HYDROXIDE	1310-73-2	2	5	%

Comments

Generator Comments:

AEC Comments:

IEC Comments:

HWTS 08-Aug-2011 09:05

Turn-In Document: W90B30-1179-0003 Page 1

Status

ID: W90B30-1179-0003
Status: ALL CONTAINERS OFFSITE
Date Generated: 28-Jun-2011

Fund Cite: 1WEP3D J-FLD

Non-reusable product
Posted, but not taken from Freebies List nor sold by DRMO

Activity: SBCCOM
Generator: DENNIS HALL
Phone: 5-3150
e-mail: dennis.g.hall@us.army.mil

Office: RDCB-DPO-A
Generator Site: BLDGREN
Building: ECBC
Location: NA
Phone: 5-3150

Data Entry: FORD, JOHN
Phone: c443-655-7298
e-mail: john.w.ford@us.army.mil

Receiving Site: E5844
Manager: FORD, JOHN
Phone: c443-655-7298
e-mail: john.w.ford@us.army.mil

Analysis

ID: 1179-003
Nomenclature: EDS RINSATE (223690-693)
Status: IEC APPROVED

Containers

Form Code: B119 - OTHER INORGANIC LIQUIDS (SPECIFY IN COMMENTS)

Container		Packaging			Storage				Disposal					
Barcode	HITS ID	Pack	Cntr Type	Wgt (lbs)	Type	Building	Location	Description	CLIN	Cost	Manifest ID	Line #	Shipped	Disposed
HM000223690		NC	DM55	400	IS	E5864	ROOM 5	OTHER ORGANICS						
HM000223691		NC	DM55	400	IS	E5864	ROOM 5	OTHER ORGANICS						
HM000223692		NC	DM55	365	IS	E5864	ROOM 5	OTHER ORGANICS						
HM000223693		NC	DM55	300	IS	E5864	ROOM 5	OTHER ORGANICS						

Comments

Generator Comments:

AEC Comments:

IEC Comments:

HWTS 08-Aug-2011 09:07

Analysis Record: 1179-003 - EDS RINSATE (223690-693) Page 1

Status

ID: 1179-003
Nomenclature: EDS RINSATE (223690-693)
Status: IEC APPROVED
Date Generated: 28-Jun-2011

Information From: ☐ Label
☐ MSDS
☐ Generator Knowledge
☐ Lab Analysis EPA Lab ID: ANALYTICAL LAB SVCS Analysis Record(s): 48-11-223692-693

Activity: SBCCOM
Generator: DENNIS HALL
Phone: 5-3150
e-mail: dennis.g.hall@us.army.mil

Office: RDCB-DPO-A
Generator Site: BLDGREN
Building: ECBC
Location: NA
Phone: 5-3150

Data Entry: FORD, JOHN
Phone: c443-655-7298
e-mail: john.w.ford@us.army.mil

Physical

State: Liquid
Corrosive: pH 2.1 - 12.4
Flashpoint: >= 140° F
Layers: Single
UHC's Present: No
Color:

Hazards

State Process: A04 - FLUSH RINSING (CLEANING & DEGREASING).
General Properties:
☐ Oxidizer ☐ PCBs ☐ Flammable Solid ☐ Air Reactive ☐ Water Reactive
☐ Cyanide Bearing ☐ Sulfide Bearing ☐ Explosive ☐ Radioactive

EPA Codes:

Code	Description	CAS
D018	BENZENE CHARACTERISTIC WASTE / TCLP >= 0.5 PPM	61-43-2
D019	CARBON TETRACHLORIDE CHARACTERISTIC WASTE / TCLP >= 0.5 PPM	56-23-5
D022	CHLOROFORM CHARACTERISTIC WASTE / TCLP >= 6.0 PPM	67-66-3
D039	TETRACHLOROETHYLENE CHARACTERISTIC WASTE / TCLP >= 0.7 PPM	127-18-4

Chemicals

Name	CAS	Min	Max	Units
BENZENE	71-43-2	59.4	60	ppm
WATER	7732-18-5	50	60	%
CARBON TETRACHLORIDE	56-23-5	40	41	ppm
PROPOLYENE GLYCOL		30	40	%
CHLOROFORM	67-66-3	24.6	25	ppm
SODIUM HYDROXIDE	1310-73-2	2	5	%
TETRACHLOROETHYLENE	127-18-4	1.9	2	ppm

Comments

Generator Comments:

AEC Comments:

IEC Comments:

HWTS 08-Aug-2011 09:07

Turn-In Document: W90B30-1161-0011 Page 1

Status

ID: W90B30-1161-0011
Status: ALL CONTAINERS OFFSITE
Date Generated: 10-Jun-2011

Fund Cite: 1WEP3D J-FLD

Non-reusable product
Posted, but not taken from Freebies List nor sold by DRMO

Activity: SBCCOM
Generator: DENNIS HALL
Phone: 5-3150
e-mail: dennis.g.hall@us.army.mil

Office: RDCB DPO-A
Generator Site: BLDGREN
Building: ECBC
Location: NA
Phone: 5-3150

Data Entry: FORD, JOHN
Phone: c443-655-7298
e-mail: john.w.ford@us.army.mil

Receiving Site: E5844
Manager: FORD, JOHN
Phone: c443-655-7298
e-mail: john.w.ford@us.army.mil

Analysis

ID: 1144-003
Nomenclature: PPE W/BENZENE RESIDUE
Status: IEC APPROVED

Containers

Form Code: B319 - OTHER WASTE INORGANIC SOLIDS (SPECIFY IN COMMENTS)

Container		Packaging			Storage				Disposal					
Barcode	HITS ID	Pack	Cntr Type	Wgt (lbs)	Type	Building	Location	Description	CLIN	Cost	Manifest ID	Line #	Shipped	Disposed
HM000223695		NC	DP55	50	IS	E5866	ROOM 7	MD02/MD03/XXX						

Comments

Generator Comments:

AEC Comments:

IEC Comments:

HWTS 08-Aug-2011 09:09

Analysis Record: 1144-003 - PPE W/BENZENE RESIDUE

Status

ID: 1144-003
Nomenclature: PPE W/BENZENE RESIDUE
Status: IEC APPROVED
Date Generated: 24-May-2011

Information From: Label
MSDS
Generator Knowledge
Lab Analysis

Activity: SBCCOM
Generator: DENNIS HALL
Phone: 5-3150
e-mail: dennis.g.hall@us.army.mil

Office: RDCB-DPO-A
Generator Site: BLDGREN
Building: ECBC
Location: NA
Phone: 5-3150

Data Entry: FORD, JOHN
Phone: c443-655-7298
e-mail: john.w.ford@us.army.mil

Physical

State: Solid
Corrosive: NA
Flashpoint:
Layers: Single
UHC's Present:
Color:

Hazards

State Process: A91 - CLOTHING AND PERSONAL PROTECTIVE EQUIPMENT (OTHER PROCESSES)
General Properties:
Oxidizer, PCBs, Flammable Solid, Air Reactive, Water Reactive
Cyanide Bearing, Sulfide Bearing, Explosive, Radioactive

EPA Codes:

Code	Description	CAS
D018	BENZENE CHARACTERISTIC WASTE / TCLP >= 0.5 PPM	61-43-2

Chemicals

Name	CAS	Min	Max	Units
PPE (PLASTIC/TYVEK & RUBBER)		100	100	%
BENZENE	71-43-2	0.5	0.7	ppm

Comments

Generator Comments:

AEC Comments: item containing benzene blown and benzene trapped in items

IEC Comments:

HWTS 08-Aug-2011 09:09

Turn-In Document: W90B30-1161-0012 Page 1

Status

ID: W90B30-1161-0012
Status: ALL CONTAINERS OFFSITE
Date Generated: 10-Jun-2011
AEC Approved: 10-Jun-2011
IEC Approved: 13-Jun-2011

Fund Cite: 1WFP3D J-FLD

Non-reusable product
Posted, but not taken from Freebies List nor sold by DRMO

Activity: SBCCOM
Generator: DENNIS HALL
Phone: 5-3150
e-mail: dennis.g.hall@us.army.mil

Office: RDCB-DPO-A
Generator Site: BLDGREN
Building: ECBC
Location: NA
Phone: 5-3150

Data Entry: FORD, JOHN
Phone: c443-655-7298
e-mail: john.w.ford@us.army.mil

Receiving Site: E5844
Manager: FORD, JOHN
Phone: c443-655-7298
e-mail: john.w.ford@us.army.mil

Analysis

ID: 1144-002
Nomenclature: ASZM TEDA CARBON FILTER W/BENZENE
Status: IEC APPROVED

Containers

Form Code: B310 - SPENT SOLID FILTERS OR ADSORBENTS

Container		Packaging			Storage					Disposal				
Barcode	HIFS ID	Pack	Cntr Type	Wgt (lbs)	Type	Building	Location	Description	CLIN	Cost	Manifest ID	Line #	Shipped	Disposed
HM000223696		NC	EA	61	IS	E5864	ROOM 5	OTHER ORGANICS						
HM000223697		NC	DP55	61	IS	E5864	ROOM 5	OTHER ORGANICS						

Comments

Generator Comments: BOTH BAGS OF FILTERS WERE PLACED INTO ONE DP55 FOR A TOTAL WEIGHT OF 122LBS.

AEC Comments:

IEC Comments:

HWTS 08-Aug-2011 09:08

Analysis Record: 1144-002 - ASZM TEDA CARBON FILTER W/BENZENE

Status

ID: 1144-002
Nomenclature: ASZM TEDA CARBON FILTER W/BENZENE
Status: IEC APPROVED
Date Generated: 24-May-2011

Information From: Label
MSDS
Generator Knowledge
Lab Analysis

Activity: SBCCOM
Generator: DENNIS HALL
Phone: 5-3150
e-mail: dennis.g.hall@us.army.mil

Office: RDCB-DPO-A
Generator Site: BLDGREN
Building: ECBC
Location: NA
Phone: 5-3150

Data Entry: FORD, JOHN
Phone: c443-655-7298
e-mail: john.w.ford@us.army.mil

Physical

State: Solid
Corrosive: NA
Flashpoint:
Layers: Single
UHC's Present:
Color:

Hazards

State Process: A55 - FILTER/BATTERY REPLACEMENT (ONE-TIME & INTERMITTENT PROCESS.
General Properties:

Oxidizer	PCBs	Flammable Solid	Air Reactive	Water Reactive
Cyanide Bearing	Sulfide Bearing	Explosive	Radioactive	

EPA Codes:

Code	Description	CAS
D018	BENZENE CHARACTERISTIC WASTE / TCLP >= 0.5 PPM	61-43-2

Chemicals

Name	CAS	Min	Max	Units
METAL HOUSING		30	75	%
ASZM TEDA CARBON		25	35	%
BENZENE	71-43-2	0.5	0.7	ppm

Comments

Generator Comments:

AEC Comments: benzene item blown and trapped in items in the turn in

IEC Comments:

HWTS 08-Aug-2011 09:08

Turn-In Document: W90B30-1220-0012 **Page 1**

Status

ID: **W90B30-1220-0012**
Status: **ALL CONTAINERS OFFSITE**
Date Generated: **08-Aug-2011**
AEC Approved: **08-Aug-2011**
IEC Approved: **09-Aug-2011**

Fund Cite: **1WEP3D J-FLD**

Non-reusable product
Posted, but not taken from Freebies List nor sold by DRMO

Activity: **SBCCOM**
Generator: **DENNIS HALL**
Phone: **5-3150**
e-mail: **dennis.g.hall@us.army.mil**

Office: **RDCB-DPO-A**
Generator Site: **BLDGREN**
Building: **ECBC**
Location: **NA**
Phone: **5-3150**

Data Entry: **FORD, JOHN**
Phone: **c443-655-7298**
e-mail: **john.w.ford@us.army.mil**

Receiving Site: **E5844**
Manager: **FORD, JOHN**
Phone: **c443-655-7298**
e-mail: **john.w.ford@us.army.mil**

Analysis

ID: **1157-013**
Nomenclature: **EDS RINSATE (5/24)**
Status: **IEC APPROVED**

Containers

Form Code: **B110 - CAUSTIC AQUEOUS WASTE**

Container		Packaging			Storage				Disposal					
Barcode	HITS ID	Pack	Cntr Type	Wgt (lbs)	Type	Building	Location	Description	CLIN	Cost	Manifest ID	Line #	Shipped	Disposed
HM000203382		NO	DM55	250	OS	OFFSITE	ILD008642424	TWI - ONYX ENV SERVICES	109AA	106.25	000184959 VES	4/29	29-Aug-2011	
HM000203383		NO	DM55	260	OS	OFFSITE	ILD008642424	TWI - ONYX ENV SERVICES	109AA	111.3	000184959 VES	4/29	29-Aug-2011	

Comments

Generator Comments:

AEC Comments

IEC Comments

HWTS 27-Sep-2011 10:50

Analysis Record: 1157-013 - EDS RINSATE (5/24)

Status

ID: 1157-013
Nomenclature: EDS RINSATE (5/24)
Status: IEC APPROVED
Date Generated: 06-Jun-2011

Information From: Label
MSDS
Generator Knowledge
Lab Analysis EPA Lab ID: ANALYTICAL LAB SVCS Analysis Record(s): HM223644

Activity: SBCCOM
Generator: DENNIS HALL
Phone: 5-3150
e-mail: dennis.g.hall@us.army.mil

Office: RDCB-DPO-A
Generator Site: BLDGREN
Building: ECBC
Location: NA
Phone: 5-3150

Data Entry: FORD, JOHN
Phone: c443-655-7298
e-mail: john.w.ford@us.army.mil

Physical

State: Liquid
Corrosive: pH >= 12.5
Flashpoint: >= 140° F
Layers: Single
UHC's Present: Yes
Color: BLACK

Hazards

State Process: A03 - CAUSTIC (ALKALI) CLEANING (CLEANING & DEGREASING).
General Properties:
Oxidizer, PCBs, Flammable Solid, Air Reactive, Water Reactive
Cyanide Bearing, Sulfide Bearing, Explosive, Radioactive

EPA Codes:

Code	Description	CAS
D002	CORROSIVE AQUEOUS LIQUID WITH PH <= 2 OR >= 12.5	
D008	LEAD CHARACTERISTIC WASTE / TCLP >= 5.0 PPM	7439-92-1
D010	SELENIUM CHARACTERISTIC WASTE / TCLP >= 1.0 PPM	7782-49-2
D018	BENZENE CHARACTERISTIC WASTE / TCLP >= 0.5 PPM	61-43-2

Chemicals

Name	CAS	Min	Max	Units
BENZENE	71-43-2	105	107	ppm
WATER	7732-18-5	60	70	%
SODIUM HYDROXIDE	1310-73-2	30	40	%
LEAD	7439-92-1	9.6	9.8	mg/l
SELENIUM	7782-49-2	1.3	1.5	mg/l

Comments

Generator Comments:

AEC Comments

IEC Comments

Turn-In Document: W90B30-1168-0003 Page 1

Status

ID: W90B30-1168-0003
Status: ALL CONTAINERS OFFSITE
Date Generated: 17-Jun-2011

Fund Cite: 1WEP3D J-FLD

Non-reusable product
Posted, but not taken from Freebies List nor sold by DRMO

Activity: SBCCOM
Generator: DENNIS HALL
Phone: 5-3150
e-mail: dennis.g.hall@us.army.mil

Office: RDCB-DPO-A
Generator Site: BLDGREN
Building: ECBC
Location: NA
Phone: 5-3150

Data Entry: FORD, JOHN
Phone: c443-655-7298
e-mail: john.w.ford@us.army.mil

Receiving Site: E5844
Manager: FORD, JOHN
Phone: c443-655-7298
e-mail: john.w.ford@us.army.mil

Analysis

ID: 1144-003
Nomenclature: PPE W/BENZENE RESIDUE
Status: IEC APPROVED

Containers

Form Code: B319 - OTHER WASTE INORGANIC SOLIDS (SPECIFY IN COMMENTS)

Container		Packaging			Storage				Disposal					
Barcode	HITS ID	Pack	Cntr Type	Wgt (lbs)	Type	Building	Location	Description	CLIN	Cost	Manifest ID	Line #	Shipped	Disposed
HM000203389		NC	DF55	78	IS	E5866	ROOM 7	MD02/MD03/XXX						

Comments

Generator Comments:

AEC Comments:

IEC Comments:

HWTS 08-Aug-2011 09:07

Analysis Record: 1144-003 - PPE W/BENZENE RESIDUE

Status

ID: 1144-003
Nomenclature: PPE W/BENZENE RESIDUE
Status: IEC APPROVED
Date Generated: 24-May-2011

Information From: Label
MSDS
Generator Knowledge
Lab Analysis

Activity: SBCCOM
Generator: DENNIS HALL
Phone: 5-3150
e-mail: dennis.g.hall@us.army.mil

Office: RDCB-DPO-A
Generator Site: BLDGREN
Building: ECBC
Location: NA
Phone: 5-3150

Data Entry: FORD, JOHN
Phone: c443-655-7298
e-mail: john.w.ford@us.army.mil

Physical

State: Solid
Corrosive: NA
Flashpoint:
Layers: Single
UHC's Present:
Color:

Hazards

State Process: A91 - CLOTHING AND PERSONAL PROTECTIVE EQUIPMENT (OTHER PROCESSES)
General Properties:
Oxidizer PCBs Flammable Solid Air Reactive Water Reactive
Cyanide Bearing Sulfide Bearing Explosive Radioactive

EPA Codes:

Code	Description	CAS
D018	BENZENE CHARACTERISTIC WASTE / TCLP >= 0.5 PPM	61-43-2

Chemicals

Name	CAS	Min	Max	Units
PPE (PLASTIC/TYVEK & RUBBER)		100	100	%
BENZENE	71-43-2	0.5	0.7	ppm

Comments

Generator Comments:

AEC Comments: item containing benzene blown and benzene trapped in items

IEC Comments:

HWTS 08-Aug-2011 09:07

Turn-In Document: W90B30-1220-0011 **Page 1**

Status

ID: **W90B30-1220-0011**
Status: **ALL CONTAINERS OFFSITE**
Date Generated: **08-Aug-2011**
AEC Approved: **08-Aug-2011**
IEC Approved: **09-Aug-2011**

Fund Cite: **1WEP3D J-FLD**

Non-reusable product
Posted, but not taken from Freebies List nor sold by DRMO

Activity: **SBCCOM**
Generator: **DENNIS HALL**
Phone: **5-3150**
e-mail: **dennis.g.hall@us.army.mil**

Office: **RDCB-DPO-A**
Generator Site: **BLDGREN**
Building: **ECBC**
Location: **NA**
Phone: **5-3150**

Data Entry: **FORD, JOHN**
Phone: **c443-655-7298**
e-mail: **john.w.ford@us.army.mil**

Receiving Site: **E5844**
Manager: **FORD, JOHN**
Phone: **c443-655-7298**
e-mail: **john.w.ford@us.army.mil**

Analysis

ID: **1157-014**
Nomenclature: **EDS RINSATE (5/24)**
Status: **IEC APPROVED**

Containers

Form Code: **B105 - ACIDIC AQUEOUS WASTE**

Container		Packaging			Storage				Disposal					
Barcode	HITS ID	Pack	Cntr Type	Wgt (lbs)	Type	Building	Location	Description	CLIN	Cost	Manifest ID	Line #	Shipped	Disposed
HM000203384		NC	DM55	420	OS	OFFSITE	ILD098642424	TWI - ONYX ENV SERVICES	109AA	1212.1	000184959 VES	4/31	29-Aug-2011	
HM000203385		NC	DM55	180	OS	OFFSITE	ILD098642424	TWI - ONYX ENV SERVICES	109AA	90.9	000184959 VES	4/31	29-Aug-2011	
HM000203386		NC	DM55	300	OS	OFFSITE	ILD098642424	TWI - ONYX ENV SERVICES	109AA	151.5	000184959 VES	4/31	29-Aug-2011	
HM000203387		NC	DM55	260	OS	OFFSITE	ILD098642424	TWI - ONYX ENV SERVICES	109AA	141.4	000184959 VES	4/31	29-Aug-2011	
HM000203388		NC	DM55	260	OS	OFFSITE	ILD098642424	TWI - ONYX ENV SERVICES	109AA	131.3	000184959 VES	4/31	29-Aug-2011	
HM000203390		NC	DM55	240	OS	OFFSITE	ILD098642424	TWI - ONYX ENV SERVICES	109AA	121.2	000184959 VES	4/31	29-Aug-2011	

Comments

Generator Comments:

AEC Comments:

IEC Comments:

HWTS 27-Sep-2011 10:51

Analysis Record: 1157-014 - EDS RINSATE (5/24)

Status

ID: 1157-014
Nomenclature: EDS RINSATE (5/24)
Status: IEC APPROVED
Date Generated: 06-Jun-2011

Information From:
- Label
- MSDS
- Generator Knowledge
- Lab Analysis — EPA Lab ID: ANALYTICAL LAB SVCS — Analysis Record(s): 223645

Activity: SBCCOM
Generator: DENNIS HALL
Phone: 5-3150
e-mail: dennis.g.hall@us.army.mil

Office: RDCB-DPO-A
Generator Site: BLDGREN
Building: ECBC
Location: NA
Phone: 5-3150

Data Entry: FORD, JOHN
Phone: c443-655-7298
e-mail: john.w.ford@us.army.mil

Physical

State: Liquid
Corrosive: pH >= 12.5
Flashpoint: >= 140° F
Layers: Single
UHC's Present: Yes
Color: YELLOWISH TO BLACK

Hazards

State Process: A03 - CAUSTIC (ALKALI) CLEANING (CLEANING & DEGREASING).
General Properties:
- Oxidizer
- PCBs
- Flammable Solid
- Air Reactive
- Water Reactive
- Cyanide Bearing
- Sulfide Bearing
- Explosive
- Radioactive

EPA Codes:

Code	Description	CAS
D002	CORROSIVE AQUEOUS LIQUID WITH PH <= 2 OR >= 12.5	
D010	SELENIUM CHARACTERISTIC WASTE / TCLP >= 1.0 PPM	7782-49-2
D018	BENZENE CHARACTERISTIC WASTE / TCLP >= 0.5 PPM	61-43-2

Chemicals

Name	CAS	Min	Max	Units
BENZENE	71-43-2	191	193	ppm
WATER	7732-18-5	60	70	%
SODIUM HYDROXIDE	1310-73-2	30	40	%
SELENIUM	7782-49-2	1.1	1.3	mg/l

Comments

Generator Comments:

AEC Comments:

IEC Comments:

HWTS 27-Sep-2011 10:51

Turn-In Document: W90B30-1168-0004 **Page 1**

Status

ID: W90B30-1168-0004
Status: ALL CONTAINERS OFFSITE
Date Generated: 17-Jun-2011
AEC Approved: 20-Jun-2011
IEC Approved: 20-Jun-2011

Fund Cite: 1WEP3D J-FLD

Non-reusable product
Posted, but not taken from Freebies List nor sold by DRMO

Activity: SBCCOM
Generator: DENNIS HALL
Phone: 5-3150
e-mail: dennis.g.hall@us.army.mil

Office: RDCB-DPO-A
Generator Site: BLDGREN
Building: ECBC
Location: NA
Phone: 5-3150

Data Entry: FORD, JOHN
Phone: c443-655-7298
e-mail: john.w.ford@us.army.mil

Receiving Site: E5844
Manager: FORD, JOHN
Phone: c443-655-7298
e-mail: john.w.ford@us.army.mil

Analysis

ID: 1144-002
Nomenclature: ASZM TEDA CARBON FILTER W/BENZENE
Status: IEC APPROVED

Containers

Form Code: B310 - SPENT SOLID FILTERS OR ADSORBENTS

Container		Packaging			Storage				Disposal					
Barcode	HITS ID	Pack	Cntr Type	Wgt (lbs)	Type	Building	Location	Description	CLIN	Cost	Manifest ID	Line #	Shipped	Disposed
HM000203391		NC	DP55	142	OS	OFF SITE	TXD000838896	PORT ARTHUR ONYX ENV	1104B	128.08	CC0184966 VES	5/40	26-Sep-2011	

Comments

Generator Comments: These filters screw into the top of the 55gallon plastic drums of benzene waste and filter benzene vapors.

AEC Comments:

IEC Comments:

HWTS 27-Sep-2011 11:09

Analysis Record: 1144-002 - ASZM TEDA CARBON FILTER W/BENZENE

Status

ID: 1144-002
Nomenclature: ASZM TEDA CARBON FILTER W/BENZENE
Status: IEC APPROVED
Date Generated: 24-May-2011

Information From: Label
MSDS
Generator Knowledge
Lab Analysis

Activity: SBCCOM
Generator: DENNIS HALL
Phone: 5-3150
e-mail: dennis.g.hall@us.army.mil

Office: RDCB-DPO-A
Generator Site: BLDGREN
Building: ECBC
Location: NA
Phone: 5-3150

Data Entry: FORD, JOHN
Phone: c443-655-7298
e-mail: john.w.ford@us.army.mil

Physical

State: Solid
Corrosive: NA
Flashpoint:
Layers: Single
UHC's Present:
Color:

Hazards

State Process: A55 - FILTER/BATTERY REPLACEMENT (ONE-TIME & INTERMITTENT PROCESS.
General Properties:
Oxidizer
Cyanide Bearing
PCBs
Sulfide Bearing
Flammable Solid
Explosive
Air Reactive
Radioactive
Water Reactive

EPA Codes:

Code	Description	CAS
D018	BENZENE CHARACTERISTIC WASTE / TCLP >= 0.5 PPM	61-43-2

Chemicals

Name	CAS	Min	Max	Units
METAL HOUSING		30	75	%
ASZM TEDA CARBON		25	35	%
BENZENE	71-43-2	0.5	0.7	ppm

Comments

Generator Comments:

AEC Comments: benzene item blown and trapped in items in the turn in

IEC Comments

Turn-In Document: W90B30-1216-0027

Status

ID: W90B30-1216-0027
Status: ALL CONTAINERS OFFSITE
Date Generated: 04-Aug-2011

Fund Cite: 1WEP3D J-FLD

- Non-reusable product
- Posted, but not taken from Freebies List nor sold by DRMO

Activity: SBCCOM
Generator: DENNIS HALL
Phone: 5-3150
e-mail: dennis.g.hall@us.army.mil

Office: RDCB-DPO-A
Generator Site: BLDGREN
Building: ECBC
Location: NA
Phone: 5-3150

Data Entry: FORD, JOHN
Phone: c443-655-7298
e-mail: john.w.ford@us.army.mil

Receiving Site: E5844
Manager: FORD, JOHN
Phone: c443-655-7298
e-mail: john.w.ford@us.army.mil

Analysis

ID: 1216-009
Nomenclature: EDS RINSATE 6/28
Status: IEC APPROVED

Containers

Form Code: B11$ - OTHER INORGANIC LIQUIDS (SPECIFY IN COMMENTS)

Container		Packaging			Storage				Disposal					
Barcode	HITS ID	Pack	Cntr Type	Wgt (lbs)	Type	Building	Location	Description	CLIN	Cost	Manifest ID	Line #	Shipped	Disposed
HM000221864		NC	DP55	400	OS	OFFSITE	ILD098642424	TWI - ONYX ENV SERVICES	109AA	202	000184959 VES	3/19	29-Aug-2011	
HM000221865		NC	DP55	410	OS	OFFSITE	ILD098642424	TWI - ONYX ENV SERVICES	109AA	207.05	000184959 VES	3/19	29-Aug-2011	

Comments

Generator Comments:

AEC Comments:

IEC Comments:

HWTS 27-Sep-2011 10:52

Analysis Record: 1216-009 - EDS RINSATE 6/28

Status

ID: 1216-009
Nomenclature: EDS RINSATE 6/28
Status: IEC APPROVED
Date Generated: 04-Aug-2011

Information From: Label
MSDS
Generator Knowledge
Lab Analysis EPA Lab ID: ALS ENVIRONMENTAL LAB Analysis Record(s): 50-11-5

Activity: SBCCOM
Generator: DENNIS HALL
Phone: 5-3150
e-mail: dennis.g.hall@us.army.mil

Office: RDCB-DPO-A
Generator Site: BLDGREN
Building: ECBC
Location: NA
Phone: 5-3150

Data Entry: FORD, JOHN
Phone: c443-655-7298
e-mail: john.w.ford@us.army.mil

Physical

State: Liquid
Corrosive: pH 2.1 - 12.4
Flashpoint: >= 140° F
Layers: Single
UHC's Present: No
Color:

Hazards

State Process: A04 - FLUSH RINSING (CLEANING & DEGREASING).
General Properties:
Oxidizer PCBs Flammable Solid Air Reactive Water Reactive
Cyanide Bearing Sulfide Bearing Explosive Radioactive

EPA Codes:

Code	Description	CAS
D019	CARBON TETRACHLORIDE CHARACTERISTIC WASTE / TCLP >= 0.5 PPM	56-23-5

Chemicals

Name	CAS	Min	Max	Units
PROPOLYENE GLYCOL		49	51	%
CARBON TETRA CHLORIDE		45	50	ppm
WATER	7732-18-5	45	46	%
SODIUM HYDROXIDE		3	5	%

Comments

Generator Comments:

AEC Comments:

IEC Comments:

HWTS 27-Sep-2011 10:52

Turn-In Document: W90B30-1216-0029 **Page 1**

Status

ID: **W90B30-1216-0029**
Status: **ALL CONTAINERS OFFSITE**
Date Generated: **04-Aug-2011**
AEC Approved: **04-Aug-2011**
IEC Approved: **05-Aug-2011**

Fund Cite: **1WEP3D J-FLD**

Non-reusable product
Posted, but not taken from Freebies List nor sold by DRMO

Activity: **SBCCOM**
Generator: **DENNIS HALL**
Phone: **5-3150**
e-mail: **dennis.g.hall@us.army.mil**

Office: **RDCB-DPO-A**
Generator Site: **BLDGREN**
Building: **ECBC**
Location: **NA**
Phone: **5-3150**

Data Entry: **FORD, JOHN**
Phone: **c443-655-7298**
e-mail: **john.w.ford@us.army.mil**

Receiving Site: **E5844**
Manager: **FORD, JOHN**
Phone: **c443-655-7298**
e-mail: **john.w.ford@us.army.mil**

Analysis

ID: **1216-010**
Nomenclature: **EDS RINSATE 6/28**
Status: **IEC APPROVED**

Containers

Form Code: **B119 - OTHER INORGANIC LIQUIDS (SPECIFY IN COMMENTS)**

Container		Packaging			Storage				Disposal					
Barcode	HITS ID	Pack	Cntr Type	Wgt (lbs)	Type	Building	Location	Description	CLIN	Cost	Manifest ID	Line #	Shipped	Disposed
HM000221866		NC	DP55	390	OS	OFFSITE	ILD098642424	TAI - ONYX ENV SERVICES	109AA	196.95	000184959 VES	3/19	29-Aug-2011	
HM000221867		NC	DP55	425	OS	OFFSITE	ILD098642424	TAI - ONYX ENV SERVICES	109AA	214.63	000184959 VES	3/19	29-Aug-2011	

Comments

Generator Comments:

AEC Comments:

IEC Comments:

HWTS 05-Oct-2011 10:20

Analysis Record: 1216-010 - EDS RINSATE 6/28

Status

ID: 1216-010
Nomenclature: EDS RINSATE 6/28
Status: IEC APPROVED
Date Generated: 04-Aug-2011

Information From:
- Label
- MSDS
- Generator Knowledge
- Lab Analysis EPA Lab ID: ALS ENVIRONMENTAL LAB Analysis Record(s): 51-11-5

Activity: SBCCOM
Generator: DENNIS HALL
Phone: 5-3150
e-mail: dennis.g.hall@us.army.mil

Office: RDCB-DPO-A
Generator Site: BLDGREN
Building: ECBC
Location: NA
Phone: 5-3150

Data Entry: FORD, JOHN
Phone: c443-655-7298
e-mail: john.w.ford@us.army.mil

Physical

State: Liquid
Corrosive: pH 2.1 - 12.4
Flashpoint: >= 140° F
Layers: Single
UHC's Present: No
Color:

Hazards

State Process: A04 - FLUSH RINSING (CLEANING & DEGREASING).
General Properties:
- Oxidizer
- PCBs
- Flammable Solid
- Air Reactive
- Water Reactive
- Cyanide Bearing
- Sulfide Bearing
- Explosive
- Radioactive

EPA Codes:

Code	Description	CAS
D019	CARBON TETRACHLORIDE CHARACTERISTIC WASTE / TCLP >= 0.5 PPM	56-23-5

Chemicals

Name	CAS	Min	Max	Units
PROPOLYENE GLYCOL		75	77	%
CARBON TETRACHLORIDE	56-23-5	32	34	ppm
WATER	7732-18-5	23	25	%

Comments

Generator Comments:

AEC Comments

IEC Comments:

Turn-In Document: W90B30-1216-0030

Status

ID: W90B30-1216-0030
Status: ALL CONTAINERS OFFSITE
Date Generated: 04-Aug-2011
AEC Approved: 04-Aug-2011
IEC Approved: 05-Aug-2011

Fund Cite: 1WEP3D J-FLD

Non-reusable product
Posted, but not taken from Freebies List nor sold by DRMO

Activity: SBCCOM
Generator: DENNIS HALL
Phone: 5-3150
e-mail: dennis.g.hall@us.army.mil

Office: RDCB-DPO-A
Generator Site: BLDGREN
Building: ECBC
Location: NA
Phone: 5-3150

Data Entry: FORD, JOHN
Phone: c443-655-7298
e-mail: john.w.ford@us.army.mil

Receiving Site: E5844
Manager: FORD, JOHN
Phone: c443-655-7298
e-mail: john.w.ford@us.army.mil

Analysis

ID: 1216-011
Nomenclature: EDS FINAL RINSATE 6/28
Status: IEC APPROVED

Containers

Form Code: B119 - OTHER INORGANIC LIQUIDS (SPECIFY IN COMMENTS)

Container		Packaging			Storage				Disposal					
Barcode	HITS ID	Pack	Cntr Type	Wgt (lbs)	Type	Building	Location	Description	CLIN	Cost	Manifest ID	Line #	Shipped	Disposed
HM000221868		NC	DP55	350	OS	OFFSITE	ILD098642424	TWI - ONYX ENV SERVICES	109AA	176.75	000184959 VES	3/20	29-Aug-2011	

Comments

Generator Comments:

AEC Comments:

IEC Comments:

HWTS 05-Oct-2011 10:20

Analysis Record: 1216-011 - EDS FINAL RINSATE 6/28

Status

ID: 1216-011
Nomenclature: EDS FINAL RINSATE 6/28
Status: IEC APPROVED
Date Generated: 04-Aug-2011

Information From: Label
MSDS
Generator Knowledge
Lab Analysis EPA Lab ID ALS ENVIRONMENTAL LAB Analysis Record(s): 52-11-5

Activity: SBCCOM
Generator: DENNIS HALL
Phone: 5-3150
e-mail: dennis.g.hall@us.army.mil

Office: RDCB-DPO-A
Generator Site: BLDGREN
Building: ECBC
Location: NA
Phone: 5-3150

Data Entry: FORD, JOHN
Phone: c443-655-7298
e-mail: john.w.ford@us.army.mil

Physical

State: Liquid
Corrosive: pH 2.1 - 12.4
Flashpoint: >= 140° F
Layers: Single
UHC's Present: No
Color:

Hazards

State Process: A04 - FLUSH RINSING (CLEANING & DEGREASING).
General Properties:
Oxidizer
Cyanide Bearing
PCBs
Sulfide Bearing
Flammable Solid
Explosive
Air Reactive
Radioactive
Water Reactive

EPA Codes:

Code	Description	CAS
D022	CHLOROFORM CHARACTERISTIC WASTE / TCLP >= 6.0 PPM	67-66-3

Chemicals

Name	CAS	Min	Max	Units
CHLOROFORM	67-66-3	859	861	ppm
WATER	7732-18-5	95	98	%
PROPOLYENE GLYCOL		2	5	%

Comments

Generator Comments:

AEC Comments:

IEC Comments:

HWTS 05-Oct-2011 10:20

(This page intentionally left blank.)

Environmental Monitoring Laboratory

ECBC Environmental Monitoring Laboratory
Building 34-111
Pine Bluff Arsenal, AR 71602-9500
Phone: 870-540-3291
Fax: 870-540-3515

Analytical Narrative

Client/Project: JPM-Elimination/ Pine Bluff EDS	**Date Received:** 11/20/2013
Extraction Analyst: Stephen Perkins	**Date Extracted:** 11/20/2013
Analyst: Stephen Perkins	**Batch No(s):** PB13112001
Reviewer: John Schwarz	**ECBC Sample No(s):** PBEDS140013

Sample Summary

One liquid (Permanganate) sample and associated quality control were analyzed using GCMS on 11/20/2013 following the procedures specified in IOP MT-80, Revision 0, for the following: Phenyldichloroarsine (PD), Diphenylchloroarsine (DA), and Triphenylarsine (TPA).

The sample as received was free of all analytes of interest to the laboratory Limit of Quantitation (LOQ) with the following exception.

TPA was detected in the sample at a concentration above the LOQ.

Sample & Method Performance

Tuning: All tune criteria were met.

Calibration: All initial and continuing calibration criteria were met.

Internal Standard Responses: N/A.

Surrogate Recoveries: All surrogate recoveries met method requirements.

LCS/LCSD(s): All quality control criteria were not met for the LCS/LCSD. The LCS and LCSD recoveries for all the analytes of interest were below the default QC limits. The permanganate sample matrix is destructive by nature and low recoveries are expected. This does not affect the results reported.

Method Blank(s): The method blank was free of the analytes of interest to one-half the laboratory LOQ.

MS/MSD(s): All quality control criteria were not met for the MS/MSD. The MS and MSD recoveries for all the analytes of interest were below the default QC limits. The permanganate sample matrix is destructive by nature and low recoveries are expected. This does not affect the results reported.

CERTIFICATE OF ANALYSIS
This report shall not be reproduced, except in full,
Without the written consent of ECBC Environmental Monitoring Laboratory.
Please provide us feedback:
http://www.surveymonkey.com/s/CBARR-EML

Environmental Monitoring Laboratory

U.S. ARMY EDGEWOOD CHEMICAL BIOLOGICAL CENTER
CHEMICAL BIOLOGICAL APPLICATIONS & RISK REDUCTION
CBARR
BUSINESS UNIT
The Recognized Leader in Providing CB Solutions

Analytical Results

PART 1 MBFORM-41 Revision 12 March 2010

PROJECT:	PB EDS		
Reporting POC:	Ed Parshley of ECBC		CMA: Steven Norman
Phone/Fax:	**W:** (410) 436-6993	**F:**	edward.r.parshley.civ@mail.mil

Client Sample ID PBA-DAPD-20131120-DL-01
Sample Date 11/20/2013 **Matrix** Permanganate
Date Rec'd 11/20/2013 **Remarks**

Lab ID: PBEDS140013 **Batch #: PB13112001** **Method:** MT-80

Analyte		*Result*	*Units*	*LOQ*	*Preparation*	*Analysis*	*Remarks*
DA	<	2500	ug/L	2500	11/20/2013	11/20/2013	
PD	<	2500	ug/L	2500			
TPA		2600	ug/L	2500			
(Surrogate) BFB		76	%R				

All results reported to two significant figures. LOQ = Limit of Quantitation. D = Sample was diluted. E = Estimated value; result above upper calibration level. J = Detected above the method detection limit but below the LOQ. Result is an estimated value. Q = Unresolvable anomaly in QC results. B = Analyte detected in Method Blank.

Friday, November 22, 2013

Page 2 of 4

Environmental Monitoring Laboratory

U.S. ARMY EDGEWOOD CHEMICAL BIOLOGICAL CENTER
CHEMICAL BIOLOGICAL APPLICATIONS & RISK REDUCTION
CBARR
BUSINESS UNIT
The Recognized Leader in Providing CB Solutions

Analytical QC Results

PART 2 MBFORM-41 Revision 12 March 2010

PROJECT: PB EDS
Reporting POC: Ed Parshley of ECBC CMA: Steven Norman
Phone/Fax: W: (410) 436-6993 F: edward.r.parshley.civ@mail.mil

Client Sample ID PBA-DAPD-20131120-DL-01
Sample Date 11/20/2013 **Matrix** Permanganate
Date Rec'd 11/20/2013 **Remarks**

Lab ID: PBEDS140013 **Batch #: PB13112001** **Method:** MT-80

Matrix Spike

Analyte	Result	Units	LOQ	Preparation	Analysis	Remarks
DA	18	%R		11/20/2013	11/20/2013	
PD	22	%R				
TPA	2	%R				
(Surrogate) BFB	75	%R				

Lab ID: PBEDS140013 **Batch #: PB13112001** **Method:** MT-80

Matrix Spike Duplicate

Analyte	Result	Units	LOQ	Preparation	Analysis	Remarks
DA	17	%R		11/20/2013	11/20/2013	
PD	22	%R				
TPA	0	%R				
(Surrogate) BFB	69	%R				

Client Sample ID PB13112001-LCS
Sample Date 11/20/2013 **Matrix** Permanganate
Date Rec'd 11/20/2013 **Remarks**

Lab ID: PBEDS140014 **Batch #: PB13112001** **Method:** MT-80

Lab Control Spike

Analyte	Result	Units	LOQ	Preparation	Analysis	Remarks
DA	17	%R		11/20/2013	11/20/2013	
PD	22	%R				
TPA	7	%R				
(Surrogate) BFB	115	%R				

MS/MSD and LCS/LCSD results are in % recovery. LOQ = Limit of Quantitation. D = Sample was diluted. E = Estimated value; result above upper calibration level. J = Detected above the method detection limit but below the LOQ. Result is an estimated value. Q = Unresolvable anomaly in QC results.

Friday, November 22, 2013

Client Sample ID PB13112001-LCSD

Sample Date 11/20/2013 **Matrix** Permanganate

Date Rec'd 11/20/2013 **Remarks**

Lab ID: PBEDS140015 **Batch #: PB13112001** **Method:** MT-80

Lab Control Spike Duplicate

Analyte	*Result*	*Units*	*LOQ*	*Preparation*	*Analysis*	*Remarks*
DA	20	%R		11/20/2013	11/20/2013	
PD	23	%R				
TPA	10	%R				
(Surrogate) BFB	69	%R				

Client Sample ID PB13112001-MB

Sample Date 11/20/2013 **Matrix** Permanganate

Date Rec'd 11/20/2013 **Remarks**

Lab ID: PBEDS140016 **Batch #: PB13112001** **Method:** MT-80

Method Blank

Analyte		*Result*	*Units*	*LOQ*	*Preparation*	*Analysis*	*Remarks*
DA	<	1200	ug/L	2500	11/20/2013	11/20/2013	
PD	<	1200	ug/L	2500			
TPA	<	1200	ug/L	2500			
(Surrogate) BFB		74	%R				

MS/MSD and LCS/LCSD results are in % recovery. LOQ = Limit of Quantitation. D = Sample was diluted. E = Estimated value; result above upper calibration level. J = Detected above the method detection limit but below the LOQ. Result is an estimated value. Q = Unresolvable anomaly in QC results.

Friday, November 22, 2013

Page 4 of 4

Please print or type. (Form designed for use on elite (12-pitch) typewriter.) Load# 14003 Form Approved. OMB No. 2050-0039

UNIFORM HAZARDOUS WASTE MANIFEST

1. Generator ID Number: AR0213820707
2. Page 1 of 1
3. Emergency Response Phone: 800-851-8061
4. Manifest Tracking Number: 000584721 FLE

5. Generator's Name and Mailing Address
Pine Bluff Arsenal
10020 Kabrich Circle, Bldg. 10-030
Pine Bluff, AR 71602
Generator's Phone: 870-540-2807 Doug McKim

Generator's Site Address (if different than mailing address): Same---
Generator State ID# D0005

6. Transporter 1 Company Name: Triad Transport, Inc Phone 800-324-1139
U.S. EPA ID Number: Trans# 41015 OKD981588791

7. Transporter 2 Company Name:
U.S. EPA ID Number:

8. Designated Facility Name and Site Address
US Ecology
3.5 Miles South on Petronila Road
Robstown, TX 78380
Facility's Phone: 800-242-3209
U.S. EPA ID Number: Facility ID# 50052HW TXD069452340

9a. HM	9b. U.S. DOT Description (including Proper Shipping Name, Hazard Class, ID Number, and Packing Group (if any))	10. Containers No.	10. Containers Type	11. Total Quantity	12. Unit Wt./Vol.	13. Waste Codes
X	1. RQ, UN3139, Waste Oxidizing Liquid, n.o.s., (Sodium-Permanganate & Arsenic), 5.1, PGII Approval# 090059038-0 ERG# 140	0 0 9	D M	Est. 3,600	P	OUTS 114H D001 D004 D018
	2. Non-Regulated Liquid Waste Approval# 090058818-0	0 0 1	D M	Est. 400	P	OUTS 1141 No EPA Codes
	3. Non-Regulated RCRA Empty Containers (Contained Virgin Product) Approval# 090058456-0	0 0 2	D F	Est. 70	P	OUTS 1141 No EPA Codes
X	4. RQ, UN3139, Waste Oxidizing Liquid, n.o.s., (Sodium-Permanganate & Arsenic), 5.1, PGII Approval# 090059038-0 ERG# 140	0 0 1	D F	Est. 200	P	OUTS 114H D001 D004 D018

14. Special Handling Instructions and Additional Information
"See Attached Drum Inventory List" Shaw PO# 200019 "Certificate of Disposal Required"
24-Hour Emergency Response Information 800-851-8061 provided by Pine Bluff Arsenal.
Truck# 2618 Trailer# 38542

15. **GENERATOR'S/OFFEROR'S CERTIFICATION:** I hereby declare that the contents of this consignment are fully and accurately described above by the proper shipping name, and are classified, packaged, marked and labeled/placarded, and are in all respects in proper condition for transport according to applicable international and national governmental regulations. If export shipment and I am the Primary Exporter, I certify that the contents of this consignment conform to the terms of the attached EPA Acknowledgment of Consent.
I certify that the waste minimization statement identified in 40 CFR 262.27(a) (if I am a large quantity generator) or (b) (if I am a small quantity generator) is true.

Generator's/Offeror's Printed/Typed Name: Doug McKim for PBA
Signature: On behalf of PBA
Month Day Year: 02 10 14

16. International Shipments ☐ Import to U.S. ☐ Export from U.S. Port of entry/exit:
Transporter signature (for exports only): Date leaving U.S.:

17. Transporter Acknowledgment of Receipt of Materials
Transporter 1 Printed/Typed Name: ORLANDO WOMACK
Signature:
Month Day Year: 02 10 14
Transporter 2 Printed/Typed Name:
Signature:
Month Day Year:

18. Discrepancy
18a. Discrepancy Indication Space ☐ Quantity ☐ Type ☐ Residue ☐ Partial Rejection ☐ Full Rejection
Manifest Reference Number:

18b. Alternate Facility (or Generator)
U.S. EPA ID Number
Facility's Phone:

18c. Signature of Alternate Facility (or Generator)
Month Day Year

19. Hazardous Waste Report Management Method Codes (i.e., codes for hazardous waste treatment, disposal, and recycling systems)

1.	2.	3.	4.
H-132	H-132	H-132	H-132

20. Designated Facility Owner or Operator: Certification of receipt of hazardous materials covered by the manifest except as noted in Item 18a
Printed/Typed Name
Signature
Month Day Year

GENERATOR — INT'L — TRANSPORTER — DESIGNATED FACILITY

EPA Form 8700-22 (Rev. 3-05) Previous editions are obsolete. DESIGNATED FACILITY TO DESTINATION STATE (IF REQUIRED)

Please print or type. (Form designed for use on elite (12-pitch) typewriter.) Load # 14003 Form Approved. OMB No. 2050-0039

UNIFORM HAZARDOUS WASTE MANIFEST (Continuation Sheet)

21. Generator ID Number: AR0213820707
22. Page: 2 of 2
23. Manifest Tracking Number: 000584721FLE

24. Generator's Name
Pine Bluff Arsenal
10020 Kabrich Circle, Bldg. 10-030
Pine Bluff, AR 71602

25. Transporter 1 Company Name: Triad Transport, Inc Phone 800-324-1139
U.S. EPA ID Number: OKD981588791 Trans# 41015

26. Transporter _____ Company Name
U.S. EPA ID Number

27a. HM	27b. U.S. DOT Description (including Proper Shipping Name, Hazard Class, ID Number, and Packing Group (if any))	28. Containers No.	28. Containers Type	29. Total Quantity	30. Unit Wt./Vol.	31. Waste Codes
	Non-Regulated RCRA Empty Containers (Contained Virgin Product) Approval# 090058456-0	0 0 1	D M	Est. 40	P	OUTS 1141 No EPA Codes

32. Special Handling Instructions and Additional Information
"See Attached Drum Inventory List" Shaw PO# 200019 "Certificate of Disposal Required"
24-Hour Emergency Response Information 800-851-8061 provided by Pine Bluff Arsenal.
Truck# 2618 Trailer# 38542

GENERATOR

TRANSPORTER

33. Transporter _____ Acknowledgment of Receipt of Materials
Printed/Typed Name | Signature | Month | Day | Year

34. Transporter _____ Acknowledgment of Receipt of Materials
Printed/Typed Name | Signature | Month | Day | Year

DESIGNATED FACILITY

35. Discrepancy

36. Hazardous Waste Report Management Method Codes (i.e., codes for hazardous waste treatment, disposal, and recycling systems)
27a-5) H-132

EPA Form 8700-22A (Rev. 3-05) Previous editions are obsolete.

Truck/Transporter Drum Inventory Sheet
CBI Federal Services/Pine Bluff Arsenal

Manifest 000584721FLE
Load # 14003
Date 02/10/14

Manifest # Line	Drum Number	Liquid Solid	Size/Type of Drum	Approval Number	PO Number	Manifest # Line	Drum Number	Liquid Solid	Size/Type of Drum	Approval Number	PO Number
9a-1	EDB-3284	Liquid	55-Gal Steel	090059038-0	200019						
9a-1	EDB-3285	Liquid	55-Gal Steel	090059038-0	200019						
9a-1	EDB-3286	Liquid	55-Gal Steel	090059038-0	200019						
9a-1	EDB-3287	Liquid	55-Gal Steel	090059038-0	200019						
9a-1	EDB-3289	Liquid	55-Gal Steel	090059038-0	200019						
9a-1	EDB-3290	Liquid	55-Gal Steel	090059038-0	200019						
9a-1	EDB-3291	Liquid	55-Gal Steel	090059038-0	200019						
9a-1	EDB-3292	Liquid	55-Gal Steel	090059038-0	200019						
9a-1	EDB-3293	Liquid	55-Gal Steel	090059038-0	200019						
9a-2	EDB-3266	Liquid	55-Gal Steel	090058818-0	200019						
9a-3	EDB-3298	Empty	55-Gal Poly	090058456-0	200019						
9a-3	EDB-3297	Empty	55-Gal Poly	090058456-0	200019						
9a-4	EDB-3296	Liquid	55-Gal Poly	090059038-0	200019						
27a-5	EDB-3294	Empty	55-Gal Steel	090058456-0	200019						
			(14) Drums Total								

American Ecology Corporation Land Disposal Restriction Form

Generator: PINE BLUFF ARSENAL EPA I.D. Number: AR0213820707

Waste Stream Number: 090059038-0 Manifest # (with shipment): 000584721FLE

Waste is a: ☐ Wastewater ☒ Non-Wastewater ☐ Debris

EPA WASTE CODE(S)	Sub Category	For Debris - Contaminants subject to Treatment
D001		PBEDS SODIUM PERMANGANATE LIQUIDS
D004		
D018		Manifest Line Items 9a-1 and 9a-4

Check if the waste is one of the following:
- ☒ D001 - D043 — Complete Attachment 2 (UHC list)
- ☐ F001 - F005 — Complete Attachment 3A (Spent Solvent)
- ☐ F039 — Complete Attachment 3B (Leachate)

If treatment standards are expressed as a specific technology then list the 5 letter treatment code(s): STABL

A. ☐ Restricted Waste Meets Treatment Standards (40 CFR 268.7(a) (3))
The restricted waste identified above meets the treatment standards in 40 CFR 268.40 or Alturnitive LDR treatment standards for contaminated soil 40CFR268.49 and can be landfill disposed without further treatment. I have attached all supporting analytical data, where available.
I certify under penalty of law that I personally have examined and am familiar with the waste through analysis and testing or through knowledge of the waste to support this certification that the waste complies with the treatment standards specified in 40 CFR Part 268 Subpart D. I believe that the information I submitted is true, accurate and complete. I am aware that there are significant penalties for submitting a false certification, including the possibility of a fine and imprisonment.

B. ☐ Restricted Waste Treated To Treatment Standards (40 CFR 268.7(b) (I) & 268.7 (b) (2))
The treatment residue, or extract of such residue, or the restricted waste identified above has been tested to assure that the treatment residues or extract meet all applicable treatment standards in 40 CFR 268.40 and/or performance standards in 40 CFR 268.45. I have attached all supporting analytical data, where available.
I certify under penalty of law that I personally have examined and am familiar with the waste through analysis and testing or through knowledge of the waste to support this certification that the waste complies with the treatment standards specified in 40 CFR Part 268 Subpart D. I believe that the information I submitted is true, accurate and complete. I am aware that there are significant penalties for submitting a false certification, including the possibility of a fine and imprisonment.

C. ☐ Restricted Waste With Technology Based Treatment Standards (40 CFR 268.7(b) (4))
I certify under penalty of law that I personally have examined and am familiar with the treatment technology and operation of the treatment process used to support this certification and that based on my inquiry of those individuals immediately responsible for obtaining this information. I believe that the treatment process has been operated and maintained properly so as to comply with the treatment standards specified in 40 CFR 268.40, without impermissible dilution of the prohibited waste. I am aware that there are significant penalties for submitting a false certification, including the possibility of a fine and imprisonment.

D. ☐ Resticted Waste Decharacterized But Requires Treatment For UHC (40 CFR 268.9)
I certify under penalty of law that the waste has been treated in accordance with the requirements of 40 CFR 268.40 to remove the hazardous characteristic. This decharacterized waste contains Underlying Hazardous Constituents (UHC) that require further treatment to meet the universal treatment standards. I am aware that there are significant penalties for submitting a false certification, including the possibility of a fine and imprisonment.
Complete LDR Attachment 2 for UHC.

E. ☒ Restricted Waste Subject To Treatment (40 CFR 268.7(a) (2))
The restricted waste identified above must be treated to the applicable treatment standards in 40 CFR 268.40, or treated to comply with applicable prohibitions set forth in Part 268.32 or RCRA Section 3004(d). I have attached all supporting analytical data, where available.

F. ☐ Hazardous Debris Subject To Treatment (40 CFR 268.45)
This hazardous debris identified above must be treated to the alternative treatment standards in 40 CFR 268.45.

G. ☐ Restricted Waste Subject To A Variance or Extension (40 CFR 268.7(a) (4))
This restricted waste identified above is subject to a case by case exemption under 40 CFR 268.5, an exemption under 40 CFR 268.6 or a nationwide capacity variance under Subpart C of 40 CFR 268, and is not prohibited from land disposal. LDR prohibitions become effective on _____ (date) for this restricted waste. The corresponding treatment standard(s) are promulgated in 40 CFR 268.40. I have attached all supporting analytical data, where available.

H. ☐ Restricted Waste Managed In A "Lab Pack" (40 CFR 268.7(a) (9))
I certify under penalty of law that I personally have examined and am familiar with the waste and that the lab pack contains only waste that have been excluded under appendix IV to 40 CFR Part 268 and that this lab pack will be sent to a combustion facility in compliance with the alternative treatment standards for lab packs at 40 CFR 268.42(c). I am aware that there are significant penalties for submitting a false certification, including the possibility of a fine and imprisonment.

I certify and warrant that the information that appears on this form, and appended documents, is true and correct. I have correctly indicated how my waste is to be managed in accordance with 40 CFR 268. My certification is based on personal examination of the information submitted, or is based on my inquiries of those individuals responsible for obtaining the information.

Authorized Signature [signature] **Title** Environmental Manager **Date** 2/5/2014

AEC Revision 8/24/98 LDR - Page 1of 5

Attachment 2
Constituent List for Underlying Hazardous Constituents

Generator Name: PINE BLUFF ARSENAL EPA ID #: AR0213820707
Waste Stream Number 090059038-0

Check all hazardous constituent which are expected to be present or check ☐ that none are present.

☐ A2213	☐ Chlorodibromomethane	☐ 2,4-Dinitrotoluene	☐ 3-Methylcholanthrene	☐ Safrole
☐ Acenaphthene	☐ Chloroethane	☐ 2,6-Dinitrotoluene	☐ Methylene Chloride	☐ Silvex
☐ Acenaphthylene	☐ bis-(2-Chloroethoxy) methane	☐ Di-n-octyl phthalate	☐ 4,4-Methylene-bis (2-chloroaniline)	☐ 2,4,5-T
☐ Acetone	☐ bis-(2-Chloroethyl) ether	☐ Di-n-propyl nitrosoamine	☐ Methyl Ethyl Ketone	☐ 1,2,4,5-Tetrachlorobenzene
☐ Acetonitrile	☐ Chlorform	☐ p-Dimethylaminoazobenzene	☐ MIBK	☐ Tetrachlordibenzofurans
☐ Acetophenone	☐ bis(2-Chloroisopropyl) ether	☐ Diphenylamine	☐ Methyl Methacrylate	☐ Tetrachlorodibenzo-p-dioxans
☐ 2-Acetylaminofluorene	☐ p-Chloro-m-cresol	☐ 1,2 Diphenylhydrazine	☐ Methyl Methanesulfonate	☐ 1,1,1,2-Tetrachloroethane
☐ Acrolein	☐ Chloromethane	☐ Diphenylnitrosamine	☐ Methyl Parathion	☐ 1,1,2,2-Tetrachloroethane
☐ Acrylamide	☐ 2-Chloronaphthalene	☐ 1,4-Dioxane	☐ Metolcarb	☐ Tetrachloroethylene
☐ Aldicarb Sulfone	☐ 2-Chlorophenol	☐ Disulfoton	☐ Mexacarbate	☐ 2,3,4,6-Tetrachlorophenol
☐ Acrylonitrile	☐ 3-Chloropropylene	☐ Dithiocarbamate	☐ Molinate	☐ Thiodicarb
☐ Aldrin	☐ Chrysene	☐ Endosulfan I	☐ Naphthalene	☐ Thiophanate-methyl
☐ 4-Aminobiphenyl	☐ o-Cresol	☐ Endosulfan II	☐ 2-Naphthylamine	☐ Tirpate
☐ Aniline	☐ m-Cresol	☐ Endosulfan Sulfate	☐ o-Nitroaniline	☐ Toluene
☐ Anthracene	☐ p-Cresol	☐ Endrin	☐ p-Nitroaniline	☐ Toxaphene
☐ Aramite	☐ m-Cumenyl Methylcarbamate	☐ Edrin Aldehyde	☐ Nitrobenzene	☐ Triallate
☐ alpha-BHC	☐ Cycloate	☐ EPTC	☐ 5-Nitro-o-toluidine	☐ 1,2,4-Trichlorobenzene
☐ beta-BHC	☐ Cyclohexanone	☐ Ethyl Acetate	☐ o-Nitrophenol	☐ 1,1,1-Trichloroethane
☐ delta-BHC	☐ 1,2 Dibromo-3-chloropropane	☐ Ethyl Cyanide	☐ p-Nitrophenol	☐ 1,1,2-Trichloroethane
☐ gamma-BHC	☐ Ethylene Dibromide	☐ Ethyl Benzene	☐ N-Nitrosodiethylamine	☐ Trichloroethylene
☐ Barban	☐ Dibromomethane	☐ Ethyl Ether	☐ N-Nitrosodimethylamine	☐ Trichloromonofluoromethane
☐ Bendiocarb	☐ 2,4-Dichlorophenoxyacetic acid	☐ bis (2-ethylhexyl)phthalate	☐ N-Nitrosodi-n-butylamine	☐ 2,4,5-Trichlorophenol
☐ Bendiocarb Phenol	☐ o,p-DDD	☐ Ethyl Methacrylate	☐ N-Nitrosomethylethylamine	☐ 2,4,6-Trichlorophenol
☐ Benomyl	☐ o,p-DDE	☐ Ethylene oxide	☐ N-Nitrosomorpholine	☐ 1,2,3-Trichloropropane
☒ Benzene	☐ o,p-DDT	☐ Famphur	☐ N-Nitrosopyrroidine	☐ 1,1,2-Trichloro-2,2,2 trifluoroethane
☐ Benz(a) Anthracene	☐ p,p-DDD	☐ Fluoranthene	☐ N-Nitrosopiperidine	☐ Triethylamine
☐ Benzal Chloride	☐ p,p-DDE	☐ Fluorene	☐ Oxamyl	☐ Tris (2,3-Dibromopropyl) phosphate
☐ Benzo(b) Fluoranthene	☐ p,p-DDT	☐ Formetanate HCL	☐ Parathion	☐ Vemolate
☐ Benzo(k) Fluoranthene	☐ Dibenz(a,h)anthracene	☐ Formparanate	☐ PCB (Total)	☐ Vinyl Chloride
☐ Benzo (g,h,i) Perylene	☐ Dibenzo(a,e)pyrene	☐ Heptachlor	☐ Pebulate	☐ Xylene(s)
☐ Benzo(a) pyrene	☐ m-Dichlorobenzene	☐ Heptachlor Epoxide	☐ Pentachlorobenzene	☐ Antimony
☐ Bromodichloromethane	☐ o-Dichlorobenzene	☐ Hexachlorobenzene	☐ Pentachlorodibenzo-p-dioxan	☒ Arsenic
☐ Bromoform	☐ p-Dichlorobenzene	☐ Hexachlorobutadiene	☐ Pentachlorodibenzofuran	☐ Barium
☐ Bromomethane	☐ Dichlorodifluoromethane	☐ Hexachlorocyclopentadiene	☐ Pentachloroethane	☐ Beryllium
☐ 4-Bromophenyl phenylether	☐ 1,1-Dichloroethane	☐ Hexachlorodibenzofurans	☐ Pentachloronitrobenzene	☐ Cadmium
☐ N-Butyl Alcohol	☐ 1,2-Dichloroethane	☐ Hexachlorodibenzo-p-dioxins	☐ Pentachlorophenol	☒ Chromium (Total)
☐ Butyl benzyl phthalate	☐ 1,1-Dichloroethylene	☐ Hexachloroethane	☐ Phenacetin	☐ Cyanide (Total)
☐ Butylate	☐ trans-1,2-Dichloroethylene	☐ Hexachloropropylene	☐ Phenanthrene	☐ Cyanide (Amenable)
☐ 2-sec-Butyl-4,6 dinitro phenol (Dinoseb)	☐ 2,4-Dichlorophenol	☐ Indeno(1,2,3-c,d) pyrene	☐ Phenol	☐ Lead
☐ Carbaryl	☐ 2,6-Dichlorophenol	☐ Iodomethane	☐ o-Phenylenediamine	☐ Mercury(Retort NWW)
☐ Carbenzadim	☐ 1,2-Dichloropropane	☐ 3-Iodo-2-propynyl-n-butylcarbamate	☐ Phorate	☐ Mercury(All Others)
☐ Carbofuran	☐ cis-1,3-Dichloropropylene	☐ Isobutyl alcohol	☐ Phthalic Acid	☐ Nickel
☐ Carbofuran Phenol	☐ trans-1,3-Dichloropropylene	☐ Isodrin	☐ Phthalic Anhydride	☐ Selenium
☐ Carbon Disulfide	☐ Dieldrin	☐ Isolan	☐ Physostigmine	☐ Silver
☐ Carbon Tetrachloride	☐ Diethyl phthalate	☐ Isosafrole	☐ Physostigmine Salicylate	☐ Sulfide
☐ Carbosulfan	☐ Diethylene glycol	☐ Kepone	☐ Promecarb	☐ Thallium
☐ Chlorodane (alpha & gamma isomers)	☐ 2,4-Dimethyl phenol	☐ Methacrylonitrile	☐ Pronamide	☐ Vanadium
☐ p-Chloroaniline	☐ Dimethyl Phthalate	☐ Methanol	☐ Propham	☐
☐ Chlorobenzene	☐ Dimetilan	☐ Methapyrilene	☐ Propoxur	☐
☐ Chlorobenzilate	☐ Di-n-butyl phthalate	☐ Methiocarb	☐ Prosulfocarb	☐
☐ 2-Chloro-1,3-Butadiene	☐ 1,4-Dinitrobenzene	☐ Methomyl	☐ Pyrene	☐
	☐ 4,6 Dinitro-o-cresol	☐ Methoxychlor	☐ Pyridine	☐
	☐ 2,4 Dinitrophenol			

AEC Revision 1 1/9/98

LDR - Page 3 of 5

US Ecology Texas, Inc.
P.O. Box 307
3277 County Road 69
Robstown, TX 78380

Phone (800) 242 3209
(361) 387-3518
Fax (361) 387 0794
(361) 387-0577

US Ecology Texas, Inc.

a *US Ecology Inc.* company

November 11, 2013

DON SEEM
SHAW E & I
100 TECHNOLOGY CENTER
STOUGHTON, MA 02072

RE:

Generator	: **PINE BLUFF ARSENAL / PBA**
Mailing Address	: **10020 KABRICH CIRCLE, PINE BLUFF, AR 71602**
US Ecology WS #	: **090059038-0**
Waste Stream Name	: **SODIUM PERMANGANATE NEUTRALENT & RINSE WATER (RCRA HAZARDOUS LIQUID WASTE).**
Expiration Date	: **11/08/2014**
Process	: **Deact/Stab**

Dear Don Seem,

Your Waste Stream Disposal Information form for the above waste stream has been approved.

Under conditions of our operating permit, US Ecology Texas, Inc. is required to inform you that we have all the appropriate permits in order to manage your waste stream. We have received the requisite permits to operate a TSD facility. Our TCEQ permit was renewed on December 2, 1999 and our permit number is HW-50052.

The EPA Uniform Hazardous Waste Manifest (EPA Form 8700-22), appropriate LDR form/certification and Truck Inventory Sheet (if shipping in drums) must accompany each shipment. To obtain manifest, Please visit the EPA website for an approved vendor list

Please notify the Texas facility at (800)242-3209 at least 48 hours prior to shipment and provide the facility with the following information:

- Date of Shipment
- Date of Delivery
- U.S. EPA Generator ID Number
- Waste Stream Number(s)
- Total quantity of each waste stream number being shipped

Any shipment arriving at the facility without prior scheduling and/or all the appropriate paperwork will be subject to rejection.

Should you have any questions, please contact your US Ecology Texas, Inc. Technical Sales Representative at (800) 242-3209. Please refer to the US Ecology Texas, Inc. waste stream number above when making inquiries.

Sincerely,

V Suarez

VERONICA SUAREZ
CUSTOMER SERVICE ASSISTANT

US Ecology Texas, Inc.
P.O. Box 307
3277 County Road 69
Robstown, TX 78380

Phone: (800) 242 3209
(361) 387-3518
Fax: (361) 387 0794
(361) 387-0577

US Ecology Texas, Inc.

a US Ecology Inc. company

November 05, 2013

DON SEEM
SHAW E & I
100 TECHNOLOGY CENTER
STOUGHTON, MA 02072

Generator : **PINE BLUFF ARSENAL / PBA**
US Ecology WS # : **090059038-0**
Waste Stream Name : **SODIUM PERMANGANATE NEUTRALENT**
Expiration Date : **06/14/2014**

Dear Don Seem,

Please review the attached copy of your Waste Product Questionnaire (WPQ) for above referenced waste stream.

Please indicate your wish to either renew or discontinue your renewal of this waste stream and sign below If there have been any changes to the waste stream, its classification, characteristics, components, the process generating this waste, or any section of the WPQ, please inform us of these changes using the space below.

Please attach the following items and return this form to me to complete the renewal process:

[X] Updated WPQ

[ ] Waste Sample for testing

[ ] Current analytical (<1 year old)

[ ] Updated Cyanide Analysis (Total and Amenable)

[ ] MSDS

[ ] LDR Certification

[ ] Current TCEQ Waste Code #

Our technical review staff may be required to contact you for additional information if there are changes in federal or state regulations or company policy that would affect the management of this waste stream.

To keep your waste stream approval current we request your response as soon as possible. If you have any questions, please call me at 1-800-242-3209 or 361-387-3518. Thank you for your cooperation.

Sincerely,

V Suarez

VERONICA SUAREZ
CUSTOMER SERVICE ASSISTANT

[ ] Please indicate your wish to renew W/S # 090059038-0 as described above.

[ ] Indicate your wish not to continue the renewal of your W/S# 090059038-0

Please list any changes to waste stream 090059038-0 its classification, characteristics and components, the process generating this waste, or any section of the WPQ. _____

Authorized Signature: _____ Date 6 NOV 2013

Please return to: Donnell King, P.O. Box 307, Robstown, TX 78380, Fax # (361)387-0794

USEcology
an American Ecology company

WASTE PROFILE FORM

- [ ] US Ecology Nevada (Beatty) usencs@usecology.com
- [ ] US Ecology Idaho (Grandview) useics@usecology.com
- [x] US Ecology Texas (Robstown) usetcs@usecology.com
- [ ] US Ecology Michigan (Detroit) usemcs@usecology.com

PROFILE # 090059038- 0

A. CUSTOMER INFORMATION

1. Generator PINE BLUFF ARSENAL / PBA	[ ] Billing information is same [ ] P.O. required for payment
2. Facility Address: 10020 KABRICH CIRCLE	12. Billing Company: SHAW E & I
3. Mailing Address: 10020 KABRICH CIRCLE	13. Billing Address: PO BOX 98519
4. City/State/Zip PINE BLUFF, AR 71602	14. City/State/Zip: BATON ROUGE, LA 70884
5. Tech. Contact: DON SEEM	15. Billing Contact: ACCOUNTS PAYABLE
6. Phone: (870) 835-0085 7. Fax: ( ) -	16. Phone: (419)425-6067 17. Fax: (419) 425-6085
8. Generator Status: [ ] CESQG, [ ] SQG, [ ] LQG	18. Email:
9. EPA ID# AR0213820707	10. State ID# D0005
11. SIC Codes: 2899	

B. SHIPPING INFORMATION

1. US DOT Shipping Name: OXIDIZING LIQUID, N.O.S.

2. Hazard Class: 5.1 | 3. UN/NA: UN3139 | 4. Packaging Group: II | 5. RQ: 1.00

6. Container Type: [ ] Bulk [ ] Totes [ ] Pallet [ ] Bags [X] Drums [ ] Boxes [ ] Other, Describe:

7. Frequency: [X] Year [ ] QTR [ ] Month [ ] 1 Time [ ] Other, Describe:

8. Shipment Size: SS Quantity: 400.00

9. Waste Import: [ ] Yes [ ] No
If yes, complete Waste Import Supplement

C. GENERAL MATERIAL/REGULATORY INFORMATION

1. Common Name for this Waste: SODIUM PERMANGANATE NEUTRALENT & RINSE WATER (RCRA HAZARDOUS LIQUID WASTE), PBEDS UNIT

2. Process Generating the Material: SODIUM PERMANGANATE SOLN AND WATER USED IN EXPLOSIVE DESTRUCTION SYSTEM

3. Describe Physical Appearance and Odor of the Waste: CLOUDY TO PURPLE AND BLACK LIQUID

4. Odor of the Waste: [X] None [ ] Slight [ ] Strong | 5. Physical State: [ ] Liquid [ ] Sludge/Slurry [ ] Solid

6. Describe Color: | 7. Liquid phases: [ ] Single [ ] Double Layer [ ] Multi-layer

8. Knowledge is from: [ ] Lab Analysis [ ] MSDS [X] Process/Generator Knowlege

9. Waste Type (US EcologyTexas customers only): [ ] Industrial [ ] Non-Industrial

10. Is the waste restricted under EPA Land Disposal Restrictions (§268): [X] Yes [ ] No

11. If LDR "Yes", is waste: [ ] Water [X] Non-Waste Water [ ] Debris | 12. Alt. Standards for soil? [ ] Yes [X] No

13. Is the waste RCRA hazardous waste containing benzene and originating at a Petroleum Refinery (SIC 2911), Chemical Manufacturing Plant (SIC 2800 thru 2899) or Coke by-Product Recovery Plant (SIC 3312)? (If "Yes" complete Benzene Waste Operations Supplem [ ] Yes [X] No

14. VO Conc.(§264.1083): [X] <500 ppmw [ ] ≥500ppmw | 15. Has waste been treated after point of generation? [ ] Yes [X] No

16. CERCLA Regulated (Superfund) Waste [ ] Yes [X] No | 17. Butadiene waste regulated by §63 Subpart XX: [ ] Yes [X] No

18. Waste contains UHC constituent(s) (§268.48), above a treatment standard, other than those for which the waste exhibits a characteristic. (If "yes", list all UHC's in Section D)Waste Operations Supplem: [X] Yes [ ] No

19. Waste exempt from definition of "solid waste" or "hazardous waste" (If "Yes", list reference 40CFR [ ] Yes [X] No

20. State Waste Codes	OUTS114H					
21. RCRA Waste Codes	D001	D004	D018			

22. Source Code: G TBD | 23. Form Code: W WTBD | 24. Management Code: H H132

Revision date:2/2013 Page 1 / 2

D. MATERIAL COMPOSITION

Values are: [X] TCLP [ ] TOTALS — Range total ≥ 100%

Constituent	Units	Typical	Min	Max
RINSE WATER	%		70	80
SODIUM PERMANGANATE SOLN 20% CON.	%		15	20
TOTAL SUSPENDED SOLIDS	%		3	10
Arsenic	PPM		200	2000
Benzene	PPM		0.5	0.7
Chromium	PPM		1.6	2.6

E. WASTE CHARACTERISTICS

1. Oxidizer	[X] Yes [ ] No	9. Reactive sulfides ____ ppm	[ ] Yes [X] No
2. Explosive	[ ] Yes [X] No	10. Reactive Cyanides ____ ppm	[ ] Yes [X] No
3. Organic Peroxide	[ ] Yes [X] No	11. Water/air Reactive	[ ] Yes [X] No
4. Shock Sensitive	[ ] Yes [X] No	12. Thermally Unstable	[ ] Yes [X] No
5. Tires	[ ] Yes [X] No	13. TSCA regulated PCB Waste (control sheet required with shipment)	[ ] Yes [X] No
6. Pyrophoric	[ ] Yes [X] No	14. Medical/infectious Waste	[ ] Yes [X] No
7. Compressed Gases	[ ] Yes [X] No	15. Radioactive *(If yes, complete Profile Addendum for Radioactive Waste)*	[ ] Yes [X] No
8. Halogenated Organics	[ ] Yes [X] No		

16. Possibility of incidental liquids from transporation? [ ] Yes [X] No

17. Is waste a solid using the paint filter test? [ ] Yes (solid) [X] No (not solid)

18. pH *(If solid, what is pH if mixed with water?)* Range 7 to 11 Typical ____

19. Flash Point 200 °F [ ] < 140° F

F. GENERATOR'S CERTIFICATION

[ ] Yes [X] No I certify this material may be disposed of without further treatment

I authorize US Ecology to correct inconsistencies on the waste profile form that impact waste management decisions with my oral written authorization. US Ecology will require re-submittal of the waste profile information if substantial changes are determined necessary.I understand material that does not conform to specifications described in this profile may be rejected by US Ecology unless other contractual arrangements have been agreed to by both parties I certify, under penalty of law, that I am familiar with this waste stream through analysis and/or process knowledge, and that all information profiled is true, accurate, representative and complete, that all known or suspected hazards have been disclosed, and that is form was completed in accordance with the instructions provided.

Printed Name	Signature	Title	Date
Doug McKim	Dg McK	Environmental Engineer	6 NOV 2013

Revision date:2/2013 Page 2 / 2

US Ecology Texas, Inc
P.O. Box 307
3277 County Road 69
Robstown, TX 78380

Phone: (800) 242 3209
(361) 387-3518
Fax (361) 387 0794
(361) 387-0577

US Ecology Texas, Inc.

a *US Ecology Inc.* company

November 11, 2013

DON SEEM
SHAW E & I
100 TECHNOLOGY CENTER
STOUGHTON, MA 02072

RE: Generator : **PINE BLUFF ARSENAL / PBA**
Mailing Address : **10020 KABRICH CIRCLE, PINE BLUFF, AR 71602**
US Ecology WS # : **090058818-0**
Waste Stream Name : **RINSE WATER WITH SOME SOLIDS FROM WIPING LAB EQUIPMENT AND COMPRESSOR OPER/**
Expiration Date : **11/08/2014**
Process : **Solidification**

Dear Don Seem,

Your Waste Stream Disposal Information form for the above waste stream has been approved.

Under conditions of our operating permit, US Ecology Texas, Inc. is required to inform you that we have all the appropriate permits in order to manage your waste stream. We have received the requisite permits to operate a TSD facility. Our TCEQ permit was renewed on December 2, 1999 and our permit number is HW-50052.

The EPA Uniform Hazardous Waste Manifest (EPA Form 8700-22), appropriate LDR form/certification and Truck Inventory Sheet (if shipping in drums) must accompany each shipment. To obtain manifest, Please visit the EPA website for an approved vendor list

Please notify the Texas facility at (800)242-3209 at least 48 hours prior to shipment and provide the facility with the following information:

- Date of Shipment
- Date of Delivery
- U.S. EPA Generator ID Number
- Waste Stream Number(s)
- Total quantity of each waste stream number being shipped

Any shipment arriving at the facility without prior scheduling and/or all the appropriate paperwork will be subject to rejection.

Should you have any questions, please contact your US Ecology Texas, Inc. Technical Sales Representative at (800) 242-3209. Please refer to the US Ecology Texas, Inc. waste stream number above when making inquiries.

Sincerely,

VSuarez

VERONICA SUAREZ
CUSTOMER SERVICE ASSISTANT

US Ecology Texas, Inc
P.O. Box 307
3277 County Road 69
Robstown, TX 78380

Phone (800) 242 3209
(361) 387-3518
Fax (361) 387 0794
(361) 387-0577

US Ecology Texas, Inc.

a US Ecology Inc. company

November 05, 2013

DON SEEM
SHAW E & I
100 TECHNOLOGY CENTER
STOUGHTON, MA 02072

Generator : **PINE BLUFF ARSENAL / PBA**
US Ecology WS # : **090058818-0**
Waste Stream Name : **RINSE WATER WITH SOME SOLIDS FROM**
Expiration Date : **12/12/2013**

Dear Don Seem,

Please review the attached copy of your Waste Product Questionnaire (WPQ) for above referenced waste stream.

Please indicate your wish to either renew or discontinue your renewal of this waste stream and sign below If there have been any changes to the waste stream, its classification, characteristics, components, the process generating this waste, or any section of the WPQ, please inform us of these changes using the space below.

Please attach the following items and return this form to me to complete the renewal process:

[X] Updated WPQ

[ ] Waste Sample for testing

[ ] Current analytical (<1 year old)

[ ] Updated Cyanide Analysis (Total and Amenable)

[ ] MSDS

[ ] LDR Certification

[ ] Current TCEQ Waste Code #

Our technical review staff may be required to contact you for additional information if there are changes in federal or state regulations or company policy that would affect the management of this waste stream.

To keep your waste stream approval current we request your response as soon as possible. If you have any questions, please call me at 1-800-242-3209 or 361-387-3518. Thank you for your cooperation.

Sincerely,

V Suarez

VERONICA SUAREZ
CUSTOMER SERVICE ASSISTANT

[ ] Please indicate your wish to renew W/S # 090058818-0 as described above.

[ ] Indicate your wish not to continue the renewal of your W/S# 090058818-0

Please list any changes to waste stream 090058818-0 its classification, characteristics and components, the process generating this waste, or any section of the WPQ. _____

Authorized Signature: _____ Date 6 NOV 2013

Please return to: Donnell King, P.O. Box 307, Robstown, TX 78380, Fax # (361)387-0794

USEcology
an American Ecology company

WASTE PROFILE FORM

- [ ] US Ecology Nevada (Beatty) usencs@usecology.com
- [ ] US Ecology Idaho (Grandview) useics@usecology.com
- [x] US Ecology Texas (Robstown) usetcs@usecology.com
- [ ] US Ecology Michigan (Detroit) usemcs@usecology.com

PROFILE # 090058818-0

A. CUSTOMER INFORMATION

1. Generator PINE BLUFF ARSENAL / PBA		[ ] Billing information is same	[ ] P.O. required for payment
2. Facility Address: 10020 KABRICH CIRCLE		12. Billing Company: SHAW E & I	
3. Mailing Address: 10020 KABRICH CIRCLE		13. Billing Address: PO BOX 98519	
4. City/State/Zip PINE BLUFF, AR 71602		14. City/State/Zip: BATON ROUGE, LA 70884	
5. Tech. Contact:		15. Billing Contact: ACCOUNTS PAYABLE	
6. Phone: ( ) -	7. Fax: ( ) -	16. Phone: (419)425-6067	17. Fax: (419) 425-6085
8. Generator Status : [ ] CESQG, [ ] SQG, [ ] LQG		18. Email:	
9. EPA ID# AR0213820707		10. State ID# D0005	
11. SIC Codes: 2899			

B. SHIPPING INFORMATION

1. US DOT Shipping Name: NON-REGULATED MATERIAL			
2. Hazard Class: N/A	3. UN/NA:	4. Packaging Group:	5. RQ:
6. Container Type: [ ] Bulk [ ] Totes [ ] Pallet [ ] Bags [x] Drums [ ] Boxes [ ] Other, Describe: 5,20,30,			
7. Frequency: [x] Year [ ] QTR [ ] Month [ ] 1 Time [ ] Other, Describe:			
8. Shipment Size: 55 Quantity: 100.00		9. Waste Import: [ ] Yes [ ] No *If yes, complete Waste Import Supplement*	

C. GENERAL MATERIAL & REGULATORY INFORMATION

1. Common Name for this Waste: RINSE WATER WITH SOME SOLIDS FROM WIPING LAB EQUIPMENT AND COMPRESSOR OPERATION			
2. Process Generating the Material: CLEANING /WIPING EXTERIOR OR LAB EQUIPMENT AND PPE WITH SOAPY WT			
3. Describe Physical Appearance and Odor of the Waste: CLEAR TO CLOUDY LIQUID AND TRACE AMOUNTS OF OIL			
4. Odor of the Waste: [x] None [ ] Slight [ ] Strong		5. Physical State: [ ] Liquid [ ] Sludge/Slurry [ ] Solid	
6. Describe Color:		7. Liquid phases: [ ] Single [ ] Double Layer [ ] Multi-layer	
8. Knowledge is from: [ ] Lab Analysis [ ] MSDS [x] Process/Generator Knowlege			
9. Waste Type (US EcologyTexas customers only): [x] Industrial [ ] Non-Industrial			
10. Is the waste restricted under EPA Land Disposal Restrictions (§268): [ ] Yes [x] No			
11. If LDR "Yes", is waste: [ ] Water [x] Non-Waste Water [ ] Debris		12. Alt. Standards for soil? [ ] Yes [x] No	
13. Is the waste RCRA hazardous waste containing benzene and originating at a Petroleum Refinery (SIC 2911), Chemical Manufacturing Plant (SIC 2800 thru 2899) or Coke by-Product Recovery Plant (SIC 3312)? (If "Yes" complete Benzene Waste Operations Supplem			[ ] Yes [x] No
14. VO Conc.(§264.1083) : [x] <500 ppmw [ ] ≥500ppmw		15. Has waste been treated after point of generation?	[ ] Yes [x] No
16. CERCLA Regulated (Superfund) Waste [ ] Yes [x] No		17. Butadiene waste regulated by §63 Subpart XX:	[ ] Yes [x] No
18. Waste contains UHC constituent(s) (§268.48), above a treatment standard, other than those for which the waste exhibits a characteristic. (If "yes", list all UHC's in Section D)Waste Operations Supplem:			[ ] Yes [x] No
19. Waste exempt from definition of "solid waste" or "hazardous waste" (If "Yes", list reference 40CFR			[ ] Yes [x] No

20. State Waste Codes	OUTS1141					
21. RCRA Waste Codes						

22. Source Code: G G11	23. Form Code: W W219	24. Management Code: H H132

Revision date:2/2013

Page 1 / 2

D. WASTE COMPOSITION

Values are: ☐ TCLP ☐ TOTALS — Range total ≥ 100%

Constituent	Units	Typical	Min	Max
RINSE WATER WITH SOAP	%	0	80	90
SODIUM PEROXIDE & VINGAR	%	0	1	3
SOLIDS (SMALL JUGS JAR AND PLASTIC PIECES	%	0	3	8
TRACE AMOUNT OF COMPRESSER OIL	%	1	0	0
SOME DRUMS WILL HAVE SMALL CONTAINERS			0	0

E. WASTE CHARACTERISTICS

1. Oxidizer	☐ Yes ☒ No	9. Reactive sulfides _____ ppm	☐ Yes ☒ No
2. Explosive	☐ Yes ☒ No	10. Reactive Cyanides _____ ppm	☐ Yes ☒ No
3. Organic Peroxide	☐ Yes ☒ No	11. Water/air Reactive	☐ Yes ☒ No
4. Shock Sensitive	☐ Yes ☒ No	12. Thermally Unstable	☐ Yes ☒ No
5. Tires	☐ Yes ☒ No	13. TSCA regulated PCB Waste (control sheet required with shipment)	☐ Yes ☒ No
6. Pyrophoric	☐ Yes ☒ No	14. Medical/infectious Waste	☐ Yes ☒ No
7. Compressed Gases	☐ Yes ☒ No	15. Radioactive *(If yes, complete Profile Addendum for Radioactive Waste)*	☐ Yes ☒ No
8. Halogenated Organics	☐ Yes ☒ No		

16. Possibility of incidental liquids from transporation? ☐ Yes ☒ No

17. Is waste a solid using the paint filter test? ☐ Yes (solid) ☒ No (not solid)

18. pH *(If solid, what is pH if mixed with water?)* Range 3 to 9 Typical _____

19. Flash Point 200 °F ☐ < 140° F

F. GENERATOR'S JUSTIFICATION

☐ Yes ☒ No I certify this material may be disposed of without further treatment

I authorize US Ecology to correct inconsistencies on the waste profile form that impact waste management decisions with my oral written authorization. US Ecology will require re-submittal of the waste profile information if substantial changes are determined necessary. I understand material that does not conform to specifications described in this profile may be rejected by US Ecology unless other contractual arrangements have been agreed to by both parties

I certify, under penalty of law, that I am familiar with this waste stream through analysis and/or process knowledge, and that all information profiled is true, accurate, representative and complete, that all known or suspected hazards have been disclosed, and that is form was completed in accordance with the instructions provided.

Printed Name	Signature	Title	Date
Doug McKim	[signature]	Environmental Engineer	26NOV13

Revision date:2/2013 Page 2 / 2

US Ecology Texas, Inc.
P.O. Box 307
3277 County Road 69
Robstown, TX 78380

Phone: (800) 242 3209
(361) 387-3518
Fax: (361) 387 0794
(361) 387-0577

US Ecology Texas, Inc.

a *US Ecology Inc.* company

June 17, 2013

DON SEEM
SHAW E & I
100 TECHNOLOGY CENTER
STOUGHTON, MA 02072

RE:

Generator	: **PINE BLUFF ARSENAL / PBA**
Mailing Address	: **10020 KABRICH CIRCLE, PINE BLUFF, AR 71602**
US Ecology WS #	: **090058456-0**
Waste Stream Name	: **RCRA EMPTY CONTAINERS (PO#337989)**
Expiration Date	: **06/14/2014**
Process	: **Direct Landfill**

Dear Don Seem,

Your Waste Stream Disposal Information form for the above waste stream has been approved.

Under conditions of our operating permit, US Ecology Texas, Inc. is required to inform you that we have all the appropriate permits in order to manage your waste stream. We have received the requisite permits to operate a TSD facility. Our TCEQ permit was renewed on December 2, 1999 and our permit number is HW-50052.

The EPA Uniform Hazardous Waste Manifest (EPA Form 8700-22), appropriate LDR form/certification and Truck Inventory Sheet (if shipping in drums) must accompany each shipment. To obtain manifest, Please visit the EPA website for an approved vendor list

Please notify the Texas facility at (800)242-3209 at least 48 hours prior to shipment and provide the facility with the following information:

- Date of Shipment
- Date of Delivery
- U.S. EPA Generator ID Number
- Waste Stream Number(s)
- Total quantity of each waste stream number being shipped

Any shipment arriving at the facility without prior scheduling and/or all the appropriate paperwork will be subject to rejection.

Should you have any questions, please contact your US Ecology Texas, Inc. Technical Sales Representative at (800) 242-3209. Please refer to the US Ecology Texas, Inc. waste stream number above when making inquiries.

Sincerely,

VERONICA SUAREZ
CUSTOMER SERVICE ASSISTANT

US Ecology Texas, Inc.
P.O. Box 307
3277 County Road 69
Robstown, TX 78380

Phone: (800) 242 3209
(361) 387-3518
Fax: (361) 387 0794
(361) 387-0577

US Ecology Texas, Inc.

a US Ecology Inc. company

June 11, 2013

DON SEEM
SHAW E & I
100 TECHNOLOGY CENTER
STOUGHTON, MA 02072

Generator : **PINE BLUFF ARSENAL / PBA**
US Ecology WS # : **090058456-0**
Waste Stream Name : **RCRA EMPTY CONTAINERS (PO#337989)**
Expiration Date : **07/26/2013**

Dear Don Seem,

Please review the attached copy of your Waste Product Questionnaire (WPQ) for above referenced waste stream.

Please indicate your wish to either renew or discontinue your renewal of this waste stream and sign below. If there have been any changes to the waste stream, its classification, characteristics, components, the process generating this waste, or any section of the WPQ, please inform us of these changes using the space below.

Please attach the following items and return this form to me to complete the renewal process:

[X] Updated WPQ
[ ] Waste Sample for testing
[ ] Current analytical (<1 year old)
[ ] Updated Cyanide Analysis (Total and Amenable)
[ ] MSDS
[ ] LDR Certification
[ ] Current TCEQ Waste Code #

Our technical review staff may be required to contact you for additional information if there are changes in federal or state regulations or company policy that would affect the management of this waste stream.

To keep your waste stream approval current we request your response as soon as possible. If you have any questions, please call me at 1-800-242-3209 or 361-387-3518. Thank you for your cooperation.

Sincerely,

VSuarez

VERONICA SUAREZ
CUSTOMER SERVICE ASSISTANT

[X] Please indicate your wish to renew W/S # 090058456-0 as described above.

[ ] Indicate your wish not to continue the renewal of your W/S# 090058456-0

Please list any changes to waste stream 090058456-0 its classification, characteristics and components, the process generating this waste, or any section of the WPQ. _____

Authorized Signature: Don Mch Date 6/12/2013

Please return to: Donnell King, P.O. Box 307, Robstown, TX 78380, Fax # (361)387-0794

USEcology
an American Ecology company

WASTE PROFILE FORM

- [ ] US Ecology Nevada (Beatty) usencs@usecology.com
- [ ] US Ecology Idaho (Grandview) useics@usecology.com
- [x] US Ecology Texas (Robstown) usetcs@usecology.com
- [ ] US Ecology Michigan (Detroit) usemcs@usecology.com

PROFILE # 090058456-0

A. CUSTOMER INFORMATION

1. Generator PINE BLUFF ARSENAL / PBA	[ ] Billing Information is same [ ] P.O. required for payment
2. Facility Address: 10020 KABRICH CIRCLE	12. Billing Company: SHAW E & I
3. Mailing Address: 10020 KABRICH CIRCLE	13. Billing Address: PO BOX 98519
4. City/State/Zip PINE BLUFF, AR 71602	14. City/State/Zip: BATON ROUGE, LA 70884
5. Tech. Contact: DON SEEM	15. Billing Contact: ACCOUNTS PAYABLE
6. Phone: (870) 835-0085 7. Fax: ( ) -	16. Phone: (419)425-6067 17. Fax: (419) 425-6085
8. Generator Status : [ ] CESQG, [ ] SQG, [ ] LQG	18. Email:
9. EPA ID# AR0213820707	10. State ID# D0005
11. SIC Codes: 2899	

B. SHIPPING INFORMATION

1. US DOT Shipping Name: NON REGULATED RCRA EMPTY DRUMS

2. Hazard Class: ORM-D	3. UN/NA:	4. Packaging Group:	5. RQ:

6. Container Type: [ ] Bulk [ ] Totes [ ] Pallet [ ] Bags [X] Drums [ ] Boxes Other, Describe:

7. Frequency: [X] Year [ ] QTR [ ] Month [ ] 1 Time [ ] Other, Describe:

8. Shipment Size: _____ Quantity: 0.00

9. Waste Import: Yes No
If yes, complete Waste Import Supplement

C. GENERAL MATERIAL & REGULATORY INFORMATION

1. Common Name for this Waste: RCRA EMPTY CONTAINERS (PO#337989)

2. Process Generating the Material: EMPTY VIRGIN PRODUCT DRUMS PRODUCED WHEN UNIT USES PRODUCT IN PROCESS.

3. Describe Physical Appearance and Odor of the Waste: EMPTY DRUMS (POLY AND STEEL)

4. Odor of the Waste: [X] None [ ] Slight [ ] Strong	5. Physical State: Liquid Sludge/Slurry Solid
6. Describe Color:	7. Liquid phases: Single Double Layer Multi-layer

8. Knowledge is from: [ ] Lab Analysis [ ] MSDS [X] Process/Generator Knowlege

9. Waste Type (US EcologyTexas customers only): [X] Industrial [ ] Non-Industrial

10. Is the waste restricted under EPA Land Disposal Restrictions (§268): [ ] Yes [X] No

11. If LDR "Yes", is waste: [ ] Water [X] Non-Waste Water [ ] Debris	12. Alt. Standards for soil? Yes [X] No

13. Is the waste RCRA hazardous waste containing benzene and originating at a Petroleum Refinery (SIC 2911), Chemical Manufacturing Plant (SIC 2800 thru 2899) or Coke by-Product Recovery Plant (SIC 3312)? (If "Yes" complete Benzene Waste Operations Supplem — Yes [X] No

14. VO Conc.(§264.1083) : [X] <500 ppmw [ ] ≥500ppmw	15. Has waste been treated after point of generation? Yes [X] No
16. CERCLA Regulated (Superfund) Waste [ ] Yes [X] No	17. Butadiene waste regulated by §63 Subpart XX: Yes [X] No

18. Waste contains UHC constituent(s) (§268.48), above a treatment standard, other than those for which the waste exhibits a characteristic. (If "yes", list all UHC's in Section D)Waste Operations Supplem: — Yes [X] No

19. Waste exempt from definition of "solid waste" or "hazardous waste" (If "Yes", list reference 40CFR — Yes [X] No

20. State Waste Codes	OUTS1141	OUTS4061				
21. RCRA Waste Codes						

22. Source Code: G G11	23. Form Code: W WT8D	24. Management Code: H H132

Revision date:2/2013 Page 1 / 2

D. MATERIAL COMPOSITION

Values are: [ ] TCLP [ ] TOTALS — Range total ≥ 100%

Constituent	Units	Typical	Min	Max
RCRA EMPTY POLY/STEEL DRUMS	%	0	0	100
RCRA EMPTY 250 GALLON TOTES LAST CONTAINING VIRIN PRODUCT (S	%		0	100

E. WASTE CHARACTERISTICS

1. Oxidizer	[ ] Yes	[X] No	9. Reactive sulfides _____ ppm	[ ] Yes	X No
2. Explosive	[ ] Yes	[X] No	10. Reactive Cyanides _____ ppm	[ ] Yes	X No
3. Organic Peroxide	[ ] Yes	[X] No	11. Water/air Reactive	[ ] Yes	X No
4. Shock Sensitive	[ ] Yes	[X] No	12. Thermally Unstable	[ ] Yes	X No
5. Tires	[ ] Yes	[X] No	13. TSCA regulated PCB Waste (control sheet required with shipment)	[ ] Yes	X No
6. Pyrophoric	[ ] Yes	[X] No	14. Medical/infectious Waste	[ ] Yes	X No
7. Compressed Gases	[ ] Yes	[X] No	15. Radioactive *(If yes, complete Profile Addendum for Radioactive Waste)*	Yes	X No
8. Halogenated Organics	[ ] Yes	[X] No			

16. Possibility of incidental liquids from transporation? [ ] Yes [X] No

17. Is waste a solid using the paint filter test? [X] Yes (solid) [ ] No (not solid)

18. pH Range 4 to 10 Typical _____

19. Flash Point 200 °F [ ] < 140° F

F. GENERATOR'S CERTIFICATION

[X] Yes [ ] No I certify this material may be disposed of without further treatment

I authorize US Ecology to correct inconsistencies on the waste profile form that impact waste management decisions with my oral written authorization. US Ecology will require re-submittal of the waste profile information if substantial changes are determined necessary.I understand material that does not conform to specifications described in this profile may be rejected by US Ecology unless other contractual arrangements have been agreed to by both parties

I certify, under penalty of law, that I am familiar with this waste stream through analysis and/or process knowledge, and that all information profiled is true, accurate, representative and complete, that all known or suspected hazards have been disclosed, and that is form was completed in accordance with the instructions provided.

Printed Name	Signature	Title	Date
Doug McKim	Doug McKim	Environmental Engineer	6/12/2013

Revision date:2/2013 **Page 2 / 2**

(This page intentionally left blank.)

July 09, 2010

Shannon Sutton
Terrell Technical Services
9582 Madison Boulevard Suite 9
Madison, AL 35758

We appreciate the opportunity to provide our services to you on this project. Please find attached the data for the sample(s) listed below:

Sample ID Number	Sample Description	Date Collected	Date Submitted
AB22707	CSB 100625-WI	7/7/10	7/7/10
AB22708	CSB 100627-WI	7/7/10	7/7/10

ENERSOLV maintains a quality system compliant with **ISO 17025:2005** and meets the relevant quality system requirements of **ISO 9001:2000**. Although not all tests performed by *ENERSOLV* are covered by this quality system, all tests have been conducted in accordance with *ENERSOLV* Standard Operating Procedures and Quality Control Program using, where applicable, U.S.E.P.A. approved methodology.

This cover page is an integral part of your report. *ENERSOLV* considers this report your official record. This information shall remain in *ENERSOLV*'s active database for a period of one (1) calendar year before archiving. Any replacement of this information after archiving may result in an administrative fee to cover the cost of retrieval.

If you have any questions or would like more information regarding these analyses, please call us at (256) 350-0846.

Reviewed by:

Karen Sutton

Karen Sutton
Vice President Client Services

P.O. Box 1646 • Decatur, Alabama 35602 • (256) 350-0846 • Fax: (256) 350-0686

ENERSOLV a Solutions Company

SAMPLE RESULTS REPORT

Report Date: 7/9/10
Report Time: 14:06

REPORT TO

Shannon Sutton
Terrell Technical Services
9582 Madison Boulevard Suite 9
Madison, AL 35758

ENERSOLV maintains Laboratory Accreditation Bureau accreditation to ISO/IEC 17025:2005 for the specific tests listed in L-A-B Certificate #L2239 Testing. Some tests included in this report may not be covered by this accreditation. Tests within the scope of this accreditation are indicated by an asterisk (*).

Cert. No. L2239 Testing
ISO 17025
EPA/ADEM Certification
No. 40160

This report may contain information that is confidential and/or proprietary. This information is intended for the addressee only and may not be copied or disseminated without the express consent of ENERSOLV Corporation.

Sample Point: CSB 100625-WI **Collected: 07/07/2010** **Submitted: 07/07/2010**

Sample ID	Analyte Name	Result	Units	Qual	Regulatory Limit
AB22707	1,1,1,2-Tetrachloroethane CAS: 630-20-6	<30	ug/l		
AB22707	1,1,1-Trichloroethane CAS: 71-55-6	<30	ug/l		
AB22707	1,1,2,2-Tetrachloroethane CAS: 79-34-5	<30	ug/l		
AB22707	1,1,2-Trichloroethane CAS: 79-00-5	<30	ug/l		
AB22707	1,1-Dichloroethane CAS: 75-34-3	<30	ug/l		
AB22707	1,1-Dichloroethylene CAS: 75-35-4	<30	ug/l		
AB22707	1,1-Dichloropropene CAS: 563-58-6	<30	ug/l		
AB22707	1,2,3-Trichlorobenzene CAS: 87-61-6	<30	ug/l		
AB22707	1,2,3-Trichloropropane CAS: 96-18-4	<30	ug/l		
AB22707	1,2,4-Trichlorobenzene CAS: 120-82-1	<30	ug/l		
AB22707	1,2,4-Trimethylbenzene CAS: 95-63-6	<30	ug/l		
AB22707	1,2-Dibromo-3-chloropropane CAS: 96-12-8	<30	ug/l		
AB22707	1,2-Dibromoethane CAS: 106-93-4	<30	ug/l		
AB22707	1,2-Dichlorobenzene CAS: 95-50-1	<30	ug/l		
AB22707	1,2-Dichloroethane CAS: 107-06-2	<30	ug/l		
AB22707	1,2-Dichloropropane CAS: 78-87-5	<30	ug/l		
AB22707	1,3,5-Trimethylbenzene CAS: 108-67-8	<30	ug/l		
AB22707	1,3-Dichlorobenzene CAS: 541-73-1	<30	ug/l		
AB22707	1,3-Dichloropropane CAS: 142-28-9	<30	ug/l		
AB22707	1,4-Dichlorobenzene CAS: 106-46-7	<30	ug/l		
AB22707	2,2-Dichloropropane CAS: 590-20-7	<30	ug/l		
AB22707	2-Chloroethylvinyl ether CAS: 110-75-8	<30	ug/l		

P.O. Box 1646 • Decatur, Alabama 35602 • (256) 350-0846 • Fax: (256) 350-0686

ENERSOLV
a Solutions Company

SAMPLE RESULTS REPORT

Report Date: 7/9/10
Report Time: 14:06

REPORT TO

Shannon Sutton
Terrell Technical Services
9582 Madison Boulevard Suite 9
Madison, AL 35758

ENERSOLV maintains Laboratory Accreditation Bureau accreditation to ISO/IEC 17025:2005 for the specific tests listed in L-A-B Certificate #L2239 Testing. Some tests included in this report may not be covered by this accreditation. Tests within the scope of this accreditation are indicated by an asterisk (*).

Cert. No. L2239 Testing
ISO 17025
EPA/ADEM Certification
No. 40160

This report may contain information that is confidential and/or proprietary. This information is intended for the addressee only and may not be copied or disseminated without the express consent of ENERSOLV Corporation.

Sample ID	Analyte Name	Result	Units	Qual	Regulatory Limit
AB22707	2-Chlorotoluene CAS: 95-49-8	<30	ug/l		
AB22707	4-Chlorotoluene CAS: 106-43-4	<30	ug/l		
AB22707	4-Isopropyltoluene CAS: 99-87-6	<30	ug/l		
AB22707	Benzene CAS: 71-43-2	<30	ug/l		
AB22707	Bromobenzene CAS: 108-86-1	<30	ug/l		
AB22707	Bromochloromethane CAS: 74-97-5	<30	ug/l		
AB22707	Bromodichloromethane CAS: 75-27-4	<30	ug/l		
AB22707	Bromoform CAS: 75-25-2	<30	ug/l		
AB22707	Bromomethane CAS: 74-83-9	<50	ug/l		
AB22707	Carbon tetrachloride CAS: 56-23-5	<30	ug/l		
AB22707	Chlorobenzene CAS: 108-90-7	<30	ug/l		
AB22707	Chloroethane CAS: 75-00-3	<50	ug/l		
AB22707	Chloroform CAS: 67-66-3	56	ug/l		
AB22707	Chloromethane (Methyl chloride) CAS: 74-87-3	<50	ug/l		
AB22707	cis-1,2-Dichloroethylene CAS: 156-59-4	<30	ug/l		
AB22707	cis-1,3-Dichloropropylene CAS: 10061-01-5	<30	ug/l		
AB22707	Dibromochloromethane CAS: 124-48-1	<30	ug/l		
AB22707	Dibromomethane (Methylene bromide) CAS: 74-93-3	<30	ug/l		
AB22707	Dichlorodifluoromethane CAS: 75-71-8	<30	ug/l		
AB22707	Ethyl benzene CAS: 100-41-4	<30	ug/l		
AB22707	Hexachlorobutadiene CAS: 87-68-3	<30	ug/l		
AB22707	Isopropylbenzene CAS: 98-82-8	<30	ug/l		
AB22707	m & p-Xylene CAS: 108-38-3/106-42-3	<30	ug/l		

P.O. Box 1646 • Decatur, Alabama 35602 • (256) 350-0846 • Fax: (256) 350-0686

ENERSOLV
a Solutions Company

SAMPLE RESULTS REPORT

Report Date: 7/9/10
Report Time: 14:06

REPORT TO

Shannon Sutton
Terrell Technical Services
9582 Madison Boulevard Suite 9
Madison, AL 35758

ENERSOLV maintains Laboratory Accreditation Bureau accreditation to ISO/IEC 17025:2005 for the specific tests listed in L-A-B Certificate #L2239 Testing. Some tests included in this report may not be covered by this accreditation. Tests within the scope of this accreditation are indicated by an asterisk (*).

Cert. No. L2239 Testing
ISO 17025
EPA/ADEM Certification
No. 40160

This report may contain information that is confidential and/or proprietary. This information is intended for the addressee only and may not be copied or disseminated without the express consent of ENERSOLV Corporation.

Sample ID	Analyte Name	Result	Units	Qual	Regulatory Limit
AB22707	Methyl Ethyl Ketone CAS: 78-93-3	<50	ug/l		
AB22707	Methylene chloride (Dichloromethane) CAS: 75-09-2	64	ug/l		
AB22707	Naphthalene CAS: 91-20-3	<30	ug/l		
AB22707	n-Butylbenzene CAS: 104-51-8	<30	ug/l		
AB22707	n-Propylbenzene CAS: 103-65-1	<30	ug/l		
AB22707	o-Xylene CAS: 95-47-6	<30	ug/l		
AB22707	sec-Butylbenzene CAS: 135-98-8	<30	ug/l		
AB22707	Styrene CAS: 100-42-5	<30	ug/l		
AB22707	tert-Butylbenzene CAS: 98-06-6	<30	ug/l		
AB22707	Tetrachloroethylene CAS: 127-18-4	<30	ug/l		
AB22707	Toluene CAS: 108-88-3	<30	ug/l		
AB22707	trans-1,2-Dichloroethylene CAS: 156-60-5	<30	ug/l		
AB22707	trans-1,3-Dichloropropylene CAS: 10061-02-6	<30	ug/l		
AB22707	Trichloroethylene CAS: 79-01-6	<30	ug/l		
AB22707	Trichlorofluoromethane CAS: 75-69-4	<50	ug/l		
AB22707	Vinyl chloride CAS: 75-01-4	<50	ug/l		
AB22707	1,2,4-Trichlorobenzene CAS: 120-82-1	<95.0	ug/l		
AB22707	1,2-Dichlorobenzene CAS: 95-50-1	<110	ug/l		
AB22707	1,2-Diphenylhydrazine as Azobenzene CAS: 122-66-7	<85.0	ug/l		
AB22707	1,3-Dichlorobenzene CAS: 541-73-1	<110	ug/l		
AB22707	1,4-Dichlorobenzene CAS: 106-46-7	<90.0	ug/l		
AB22707	2,3-Dichloroanaline CAS: 608-27-5	<65.0	ug/l		
AB22707	2,4,5-Trichlorophenol CAS: 95-95-4	<90.0	ug/l		

P.O. Box 1646 • Decatur, Alabama 35602 • (256) 350-0846 • Fax: (256) 350-0686

ENERSOLV
a Solutions Company

SAMPLE RESULTS REPORT

Report Date: 7/9/10
Report Time: 14:06

REPORT TO

Shannon Sutton
Terrell Technical Services
9582 Madison Boulevard Suite 9
Madison, AL 35758

ENERSOLV maintains Laboratory Accreditation Bureau accreditation to ISO/IEC 17025:2005 for the specific tests listed in L-A-B Certificate #L2239 Testing. Some tests included in this report may not be covered by this accreditation. Tests within the scope of this accreditation are indicated by an asterisk (*).

Cert. No. L2239 Testing
ISO 17025
EPA/ADEM Certification
No. 40160

This report may contain information that is confidential and/or proprietary. This information is intended for the addressee only and may not be copied or disseminated without the express consent of ENERSOLV Corporation.

Sample ID	Analyte Name	Result	Units	Qual	Regulatory Limit
AB22707	2,4,6-Trichlorophenol CAS: 88-06-2	<90.0	ug/l		
AB22707	2,4-Dichlorophenol CAS: 120-83-2	<45.0	ug/l		
AB22707	2,4-Dimethylphenol CAS: 105-67-9	<500	ug/l		
AB22707	2,4-Dinitrophenol CAS: 51-28-5	<500	ug/l		
AB22707	2,4-Dinitrotoluene CAS: 121-14-2	<40.0	ug/l		
AB22707	2,6-Dinitrotoluene CAS: 606-20-2	<45.0	ug/l		
AB22707	2-Chloronaphthalene CAS: 91-58-7	<70.0	ug/l		
AB22707	2-Chlorophenol CAS: 95-57-8	<75.0	ug/l		
AB22707	2-Methyl-4,6-dinitrophenol CAS: 534-52-1	<500	ug/l		
AB22707	2-Methylnaphthalene CAS: 91-57-6	<25.0	ug/l		
AB22707	2-Methylphenol (o-cresol) CAS: 95-8-7	<185	ug/l		
AB22707	2-Nitroaniline CAS: 88-77-4	<85.0	ug/l		
AB22707	2-Nitrophenol CAS: 88-75-5	<90.0	ug/l		
AB22707	3,3'-Dichlorobenzidine CAS: 91-94-1	<120	ug/l		
AB22707	3-Nitroaniline CAS: 99-09-2	<75.0	ug/l		
AB22707	4-Bromophenyl phenyl ether CAS: 101-55-3	<65.0	ug/l		
AB22707	4-Chloro-3-methylphenol CAS: 59-50-7	<65.0	ug/l		
AB22707	4-Chloroaniline CAS: 106-47-8	<105	ug/l		
AB22707	4-Chlorophenyl phenyl ether CAS: 7005-72-3	<50.0	ug/l		
AB22707	4-Methylphenol (p-cresol) CAS: 8001-28-3	<255	ug/l		
AB22707	4-Nitroaniline CAS: 100-01-6	<90.0	ug/l		
AB22707	4-Nitrophenol CAS: 100-02-7	<500	ug/l		
AB22707	Acenaphthene CAS: 83-32-9	<75.0	ug/l		

P.O. Box 1646 • Decatur, Alabama 35602 • (256) 350-0846 • Fax: (256) 350-0686

ENERSOLV a Solutions Company

SAMPLE RESULTS REPORT

Report Date: 7/9/10
Report Time: 14:06

REPORT TO

Shannon Sutton
Terrell Technical Services
9582 Madison Boulevard Suite 9
Madison, AL 35758

ENERSOLV maintains Laboratory Accreditation Bureau accreditation to ISO/IEC 17025:2005 for the specific tests listed in L-A-B Certificate #L2239 Testing. Some tests included in this report may not be covered by this accreditation. Tests within the scope of this accreditation are indicated by an asterisk (*).

Cert. No. L2239 Testing
ISO 17025
EPA/ADEM Certification
No. 40160

This report may contain information that is confidential and/or proprietary. This information is intended for the addressee only and may not be copied or disseminated without the express consent of ENERSOLV Corporation.

Sample ID	Analyte Name	Result	Units	Qual	Regulatory Limit
AB22707	Acenaphthylene CAS: 208-96-8	<110	ug/l		
AB22707	Acetophenone CAS: 173731-4	<90.0	ug/l		
AB22707	Aniline CAS: 62-53-3	<170	ug/l		
AB22707	Anthracene CAS: 120-12-7	<55.0	ug/l		
AB22707	a-Terpineol CAS: 98-55-5	<90.0	ug/l		
AB22707	Benzidine CAS: 92-87-5	<750	ug/l	Q	
AB22707	Benzo(a)anthracene CAS: 56-55-3	<80.0	ug/l		
AB22707	Benzo(a)pyrene CAS: 50-32-8	<75.0	ug/l		
AB22707	Benzo(b)fluoranthene CAS: 205-99-2	<75.0	ug/l		
AB22707	Benzo(ghi)perylene CAS: 191-24-2	<100	ug/l		
AB22707	Benzo(k)fluoranthene CAS: 207-08-9	<90.0	ug/l		
AB22707	Benzoic Acid CAS: 65-85-0	<500	ug/l		
AB22707	Benzyl Alcohol CAS: 100-51-6	<65.0	ug/l		
AB22707	Benzyl butyl phthalate CAS: 85-68-7	<200	ug/l		
AB22707	Bis(2-chloroethoxy)methane CAS: 111-91-1	<50.0	ug/l		
AB22707	Bis(2-chloroethyl)ether CAS: 111-44-4	<55.0	ug/l		
AB22707	Bis(2-chloroisopropyl)ether CAS: 108-60-1	<60.0	ug/l		
AB22707	Bis(2-ethylhexyl)phthalate CAS: 117-81-7	<425	ug/l		
AB22707	Carbazole CAS: 86-74-8	<200	ug/l		
AB22707	Chrysene CAS: 218-01-9	<70.0	ug/l		
AB22707	Dibenzo(a,h)anthracene CAS: 53-70-3	<165	ug/l		
AB22707	Dibenzofuran CAS: 132-64-9	<40.0	ug/l		
AB22707	Diethyl phthalate CAS: 84-66-2	<125	ug/l		

P.O. Box 1646 • Decatur, Alabama 35602 • (256) 350-0846 • Fax: (256) 350-0686

ENERSOLV
a Solutions Company

SAMPLE RESULTS REPORT

Report Date: 7/9/10
Report Time: 14:06

REPORT TO

Shannon Sutton
Terrell Technical Services
9582 Madison Boulevard Suite 9
Madison, AL 35758

ENERSOLV maintains Laboratory Accreditation Bureau accreditation to ISO/IEC 17025:2005 for the specific tests listed in L-A-B Certificate #L2239 Testing. Some tests included in this report may not be covered by this accreditation. Tests within the scope of this accreditation are indicated by an asterisk (*).

Cert. No. L2239 Testing
ISO 17025
EPA/ADEM Certification
No. 40160

This report may contain information that is confidential and/or proprietary. This information is intended for the addressee only and may not be copied or disseminated without the express consent of ENERSOLV Corporation.

Sample ID	Analyte Name	Result	Units	Qual	Regulatory Limit
AB22707	Dimethyl phthalate CAS: 131-11-3	<100	ug/l		
AB22707	Di-n-butylphthalate CAS: 84-74-2	<95.0	ug/l		
AB22707	Di-n-octylphthalate CAS: 117-84-0	<195	ug/l		
AB22707	Fluoranthene CAS: 206-44-0	<85.0	ug/l		
AB22707	Fluorene CAS: 86-73-7	<95.0	ug/l		
AB22707	Hexachlorobenzene CAS: 118-74-1	<120	ug/l		
AB22707	Hexachlorobutadiene CAS: 87-68-3	<175	ug/l		
AB22707	Hexachlorocyclopentadiene CAS: 77-47-4	<155	ug/l		
AB22707	Hexachloroethane CAS: 67-72-1	<170	ug/l		
AB22707	Indeno(1,2,3-cd)pyrene CAS: 193-39-5	<110	ug/l		
AB22707	Isophorone CAS: 78-59-1	<80.0	ug/l		
AB22707	Naphthalene CAS: 91-20-3	<40.0	ug/l		
AB22707	n-Decane CAS: 124-18-5	<205	ug/l		
AB22707	Nitrobenzene CAS: 98-95-3	<75.0	ug/l		
AB22707	N-Nitrosodimethylamine CAS: 62-75-9	<185	ug/l		
AB22707	N-Nitrosodi-n-propylamine CAS: 621-64-7	<65.0	ug/l		
AB22707	N-Nitrosodiphenylamine CAS: 86-30-6	<70.0	ug/l		
AB22707	n-Octadecane CAS: 593-45-3	<125	ug/l		
AB22707	Pentachlorophenol CAS: 87-86-5	<500	ug/l		
AB22707	Phenanthrene CAS: 85-01-8	<55.0	ug/l		
AB22707	Phenol CAS: 108-95-2	<45.0	ug/l		
AB22707	Pyrene CAS: 129-00-0	<100	ug/l		
AB22707	Pyridine CAS: 0-86-1	<100	ug/l		

P.O. Box 1646 • Decatur, Alabama 35602 • (256) 350-0846 • Fax: (256) 350-0686

ENERSOLV
a Solutions Company

Report Date: 7/9/10
Report Time: 14:06

SAMPLE RESULTS REPORT

REPORT TO

Shannon Sutton
Terrell Technical Services
9582 Madison Boulevard Suite 9
Madison, AL 35758

ENERSOLV maintains Laboratory Accreditation Bureau accreditation to ISO/IEC 17025:2005 for the specific tests listed in L-A-B Certificate #L2239 Testing. Some tests included in this report may not be covered by this accreditation. Tests within the scope of this accreditation are indicated by an asterisk (*).

Cert. No. L2239 Testing
ISO 17025
EPA/ADEM Certification
No. 40160

This report may contain information that is confidential and/or proprietary. This information is intended for the addressee only and may not be copied or disseminated without the express consent of ENERSOLV Corporation.

Sample ID	Analyte Name	Result	Units	Qual	Regulatory Limit
AB22707	Arsenic	<0.26	mg/l		
AB22707	Barium	0.0481	mg/l		
AB22707	Cadmium	<0.015	mg/l		
AB22707	Chromium	1.03	mg/l		
AB22707	Lead	<0.125	mg/l		
AB22707	Selenium	<0.25	mg/l		
AB22707	Silver	<0.05	mg/l		
AB22707	Flashpoint	>150	deg. F		
AB22707	Total Mercury CAS: 7439-97-6	<0.0200	mg/l		
AB22707	Reactive Sulfide	40.0	mg/l		

P.O. Box 1646 • Decatur, Alabama 35602 • (256) 350-0846 • Fax: (256) 350-0686

ENERSOLV
a Solutions Company

SAMPLE RESULTS REPORT

Report Date: 7/9/10
Report Time: 14:06

REPORT TO

Shannon Sutton
Terrell Technical Services
9582 Madison Boulevard Suite 9
Madison, AL 35758

ENERSOLV maintains Laboratory Accreditation Bureau accreditation to ISO/IEC 17025:2005 for the specific tests listed in L-A-B Certificate #L2239 Testing. Some tests included in this report may not be covered by this accreditation. Tests within the scope of this accreditation are indicated by an asterisk (*).

Cert. No. L2239 Testing
ISO 17025
EPA/ADEM Certification
No. 40160

This report may contain information that is confidential and/or proprietary. This information is intended for the addressee only and may not be copied or disseminated without the express consent of ENERSOLV Corporation.

Sample Point: CSB 100627-WI **Collected: 07/07/2010** **Submitted: 07/07/2010**

Sample ID	Analyte Name	Result	Units	Qual	Regulatory Limit
AB22708	1,1,1,2-Tetrachloroethane CAS: 630-20-6	<30	ug/l		
AB22708	1,1,1-Trichloroethane CAS: 71-55-6	<30	ug/l		
AB22708	1,1,2,2-Tetrachloroethane CAS: 79-34-5	<30	ug/l		
AB22708	1,1,2-Trichloroethane CAS: 79-00-5	<30	ug/l		
AB22708	1,1-Dichloroethane CAS: 75-34-3	<30	ug/l		
AB22708	1,1-Dichloroethylene CAS: 75-35-4	<30	ug/l		
AB22708	1,1-Dichloropropene CAS: 563-58-6	<30	ug/l		
AB22708	1,2,3-Trichlorobenzene CAS: 87-61-6	<30	ug/l		
AB22708	1,2,3-Trichloropropane CAS: 96-18-4	<30	ug/l		
AB22708	1,2,4-Trichlorobenzene CAS: 120-82-1	<30	ug/l		
AB22708	1,2,4-Trimethylbenzene CAS: 95-63-6	<30	ug/l		
AB22708	1,2-Dibromo-3-chloropropane CAS: 96-12-8	<30	ug/l		
AB22708	1,2-Dibromoethane CAS: 106-93-4	<30	ug/l		
AB22708	1,2-Dichlorobenzene CAS: 95-50-1	<30	ug/l		
AB22708	1,2-Dichloroethane CAS: 107-06-2	<30	ug/l		
AB22708	1,2-Dichloropropane CAS: 78-87-5	<30	ug/l		
AB22708	1,3,5-Trimethylbenzene CAS: 108-67-8	<30	ug/l		
AB22708	1,3-Dichlorobenzene CAS: 541-73-1	<30	ug/l		
AB22708	1,3-Dichloropropane CAS: 142-28-9	<30	ug/l		
AB22708	1,4-Dichlorobenzene CAS: 106-46-7	<30	ug/l		
AB22708	2,2-Dichloropropane CAS: 590-20-7	<30	ug/l		
AB22708	2-Chloroethylvinyl ether CAS: 110-75-8	<30	ug/l		

P.O. Box 1646 • Decatur, Alabama 35602 • (256) 350-0846 • Fax: (256) 350-0686

ENERSOLV
a Solutions Company

SAMPLE RESULTS REPORT

Report Date: 7/9/10
Report Time: 14:06

REPORT TO

Shannon Sutton
Terrell Technical Services
9582 Madison Boulevard Suite 9
Madison, AL 35758

ENERSOLV maintains Laboratory Accreditation Bureau accreditation to ISO/IEC 17025:2005 for the specific tests listed in L-A-B Certificate #L2239 Testing. Some tests included in this report may not be covered by this accreditation. Tests within the scope of this accreditation are indicated by an asterisk (*).

Cert. No. L2239 Testing
ISO 17025
EPA/ADEM Certification
No. 40160

This report may contain information that is confidential and/or proprietary. This information is intended for the addressee only and may not be copied or disseminated without the express consent of ENERSOLV Corporation.

Sample ID	Analyte Name	Result	Units	Qual	Regulatory Limit
AB22708	2-Chlorotoluene CAS: 95-49-8	<30	ug/l		
AB22708	4-Chlorotoluene CAS: 106-43-4	<30	ug/l		
AB22708	4-Isopropyltoluene CAS: 99-87-6	<30	ug/l		
AB22708	Benzene CAS: 71-43-2	290	ug/l		
AB22708	Bromobenzene CAS: 108-86-1	<30	ug/l		
AB22708	Bromochloromethane CAS: 74-97-5	<30	ug/l		
AB22708	Bromodichloromethane CAS: 75-27-4	<30	ug/l		
AB22708	Bromoform CAS: 75-25-2	<30	ug/l		
AB22708	Bromomethane CAS: 74-83-9	<50	ug/l		
AB22708	Carbon tetrachloride CAS: 56-23-5	<30	ug/l		
AB22708	Chlorobenzene CAS: 108-90-7	<30	ug/l		
AB22708	Chloroethane CAS: 75-00-3	<50	ug/l		
AB22708	Chloroform CAS: 67-66-3	<30	ug/l		
AB22708	Chloromethane (Methyl chloride) CAS: 74-87-3	<50	ug/l		
AB22708	cis-1,2-Dichloroethylene CAS: 156-59-4	<30	ug/l		
AB22708	cis-1,3-Dichloropropylene CAS: 10061-01-5	<30	ug/l		
AB22708	Dibromochloromethane CAS: 124-48-1	<30	ug/l		
AB22708	Dibromomethane (Methylene bromide) CAS: 74-93-3	<30	ug/l		
AB22708	Dichlorodifluoromethane CAS: 75-71-8	<30	ug/l		
AB22708	Ethyl benzene CAS: 100-41-4	<30	ug/l		
AB22708	Hexachlorobutadiene CAS: 87-68-3	<30	ug/l		
AB22708	Isopropylbenzene CAS: 98-82-8	<30	ug/l		
AB22708	m & p-Xylene CAS: 108-38-3/106-42-3	<30	ug/l		

P.O. Box 1646 • Decatur, Alabama 35602 • (256) 350-0846 • Fax: (256) 350-0686

ENERSOLV a Solutions Company

SAMPLE RESULTS REPORT

Report Date: 7/9/10
Report Time: 14:06

REPORT TO

Shannon Sutton
Terrell Technical Services
9582 Madison Boulevard Suite 9
Madison, AL 35758

ENERSOLV maintains Laboratory Accreditation Bureau accreditation to ISO/IEC 17025:2005 for the specific tests listed in L-A-B Certificate #L2239 Testing. Some tests included in this report may not be covered by this accreditation. Tests within the scope of this accreditation are indicated by an asterisk (*).

Cert. No. L2239 Testing
ISO 17025
EPA/ADEM Certification
No. 40160

This report may contain information that is confidential and/or proprietary. This information is intended for the addressee only and may not be copied or disseminated without the express consent of ENERSOLV Corporation.

Sample ID	Analyte Name	Result	Units	Qual	Regulatory Limit
AB22708	Methyl Ethyl Ketone CAS: 78-93-3	<50	ug/l		
AB22708	Methylene chloride (Dichloromethane) CAS: 75-09-2	<50	ug/l		
AB22708	Naphthalene CAS: 91-20-3	<30	ug/l		
AB22708	n-Butylbenzene CAS: 104-51-8	<30	ug/l		
AB22708	n-Propylbenzene CAS: 103-65-1	<30	ug/l		
AB22708	o-Xylene CAS: 95-47-6	<30	ug/l		
AB22708	sec-Butylbenzene CAS: 135-98-8	<30	ug/l		
AB22708	Styrene CAS: 100-42-5	<30	ug/l		
AB22708	tert-Butylbenzene CAS: 98-06-6	<30	ug/l		
AB22708	Tetrachloroethylene CAS: 127-18-4	<30	ug/l		
AB22708	Toluene CAS: 108-88-3	<30	ug/l		
AB22708	trans-1,2-Dichloroethylene CAS: 156-60-5	<30	ug/l		
AB22708	trans-1,3-Dichloropropylene CAS: 10061-02-6	<30	ug/l		
AB22708	Trichloroethylene CAS: 79-01-6	<30	ug/l		
AB22708	Trichlorofluoromethane CAS: 75-69-4	<50	ug/l		
AB22708	Vinyl chloride CAS: 75-01-4	<50	ug/l		
AB22708	1,2,4-Trichlorobenzene CAS: 120-82-1	<38.0	ug/l		
AB22708	1,2-Dichlorobenzene CAS: 95-50-1	<44.0	ug/l		
AB22708	1,2-Diphenylhydrazine as Azobenzene CAS: 122-66-7	<34.0	ug/l		
AB22708	1,3-Dichlorobenzene CAS: 541-73-1	<44.0	ug/l		
AB22708	1,4-Dichlorobenzene CAS: 106-46-7	<36.0	ug/l		
AB22708	2,3-Dichloroanaline CAS: 608-27-5	<26.0	ug/l		
AB22708	2,4,5-Trichlorophenol CAS: 95-95-4	<36.0	ug/l		

P.O. Box 1646 • Decatur, Alabama 35602 • (256) 350-0846 • Fax: (256) 350-0686

ENERSOLV a Solutions Company

SAMPLE RESULTS REPORT

Report Date: 7/9/10
Report Time: 14:06

REPORT TO

Shannon Sutton
Terrell Technical Services
9582 Madison Boulevard Suite 9
Madison, AL 35758

ENERSOLV maintains Laboratory Accreditation Bureau accreditation to ISO/IEC 17025:2005 for the specific tests listed in L-A-B Certificate #L2239 Testing. Some tests included in this report may not be covered by this accreditation. Tests within the scope of this accreditation are indicated by an asterisk (*).

Cert. No. L2239 Testing
ISO 17025
EPA/ADEM Certification
No. 40160

This report may contain information that is confidential and/or proprietary. This information is intended for the addressee only and may not be copied or disseminated without the express consent of ENERSOLV Corporation.

Sample ID	Analyte Name	Result	Units	Qual	Regulatory Limit
AB22708	2,4,6-Trichlorophenol CAS: 88-06-2	<36.0	ug/l		
AB22708	2,4-Dichlorophenol CAS: 120-83-2	<18.0	ug/l		
AB22708	2,4-Dimethylphenol CAS: 105-67-9	<200	ug/l		
AB22708	2,4-Dinitrophenol CAS: 51-28-5	<200	ug/l		
AB22708	2,4-Dinitrotoluene CAS: 121-14-2	<16.0	ug/l		
AB22708	2,6-Dinitrotoluene CAS: 606-20-2	<18.0	ug/l		
AB22708	2-Chloronaphthalene CAS: 91-58-7	<28.0	ug/l		
AB22708	2-Chlorophenol CAS: 95-57-8	<30.0	ug/l		
AB22708	2-Methyl-4,6-dinitrophenol CAS: 534-52-1	<200	ug/l		
AB22708	2-Methylnaphthalene CAS: 91-57-6	<10.0	ug/l		
AB22708	2-Methylphenol (o-cresol) CAS: 95-8-7	<74.0	ug/l		
AB22708	2-Nitroaniline CAS: 88-77-4	<34.0	ug/l		
AB22708	2-Nitrophenol CAS: 88-75-5	<36.0	ug/l		
AB22708	3,3'-Dichlorobenzidine CAS: 91-94-1	<48.0	ug/l		
AB22708	3-Nitroaniline CAS: 99-09-2	<30.0	ug/l		
AB22708	4-Bromophenyl phenyl ether CAS: 101-55-3	<26.0	ug/l		
AB22708	4-Chloro-3-methylphenol CAS: 59-50-7	<26.0	ug/l		
AB22708	4-Chloroaniline CAS: 106-47-8	<42.0	ug/l		
AB22708	4-Chlorophenyl phenyl ether CAS: 7005-72-3	<20.0	ug/l		
AB22708	4-Methylphenol (p-cresol) CAS: 8001-28-3	<102	ug/l		
AB22708	4-Nitroaniline CAS: 100-01-6	<36.0	ug/l		
AB22708	4-Nitrophenol CAS: 100-02-7	<200	ug/l		
AB22708	Acenaphthene CAS: 83-32-9	<30.0	ug/l		

P.O. Box 1646 • Decatur, Alabama 35602 • (256) 350-0846 • Fax: (256) 350-0686

ENERSOLV
a Solutions Company

SAMPLE RESULTS REPORT

Report Date: 7/9/10
Report Time: 14:06

REPORT TO

Shannon Sutton
Terrell Technical Services
9582 Madison Boulevard Suite 9
Madison, AL 35758

ENERSOLV maintains Laboratory Accreditation Bureau accreditation to ISO/IEC 17025:2005 for the specific tests listed in L-A-B Certificate #L2239 Testing. Some tests included in this report may not be covered by this accreditation. Tests within the scope of this accreditation are indicated by an asterisk (*).

Cert. No. L2239 Testing
ISO 17025
EPA/ADEM Certification
No. 40160

This report may contain information that is confidential and/or proprietary. This information is intended for the addressee only and may not be copied or disseminated without the express consent of ENERSOLV Corporation.

Sample ID	Analyte Name	Result	Units	Qual	Regulatory Limit
AB22708	Acenaphthylene CAS: 208-96-8	<44.0	ug/l		
AB22708	Acetophenone CAS: 173731-4	3690	ug/l		
AB22708	Aniline CAS: 62-53-3	234	ug/l		
AB22708	Anthracene CAS: 120-12-7	<22.0	ug/l		
AB22708	a-Terpineol CAS: 98-55-5	<36.0	ug/l		
AB22708	Benzidine CAS: 92-87-5	<300	ug/l	Q	
AB22708	Benzo(a)anthracene CAS: 56-55-3	<32.0	ug/l		
AB22708	Benzo(a)pyrene CAS: 50-32-8	<30.0	ug/l		
AB22708	Benzo(b)fluoranthene CAS: 205-99-2	<30.0	ug/l		
AB22708	Benzo(ghi)perylene CAS: 191-24-2	<40.0	ug/l		
AB22708	Benzo(k)fluoranthene CAS: 207-08-9	<36.0	ug/l		
AB22708	Benzoic Acid CAS: 65-85-0	931	ug/l		
AB22708	Benzyl Alcohol CAS: 100-51-6	<26.0	ug/l		
AB22708	Benzyl butyl phthalate CAS: 85-68-7	<80.0	ug/l		
AB22708	Bis(2-chloroethoxy)methane CAS: 111-91-1	<20.0	ug/l		
AB22708	Bis(2-chloroethyl)ether CAS: 111-44-4	<22.0	ug/l		
AB22708	Bis(2-chloroisopropyl)ether CAS: 108-60-1	<24.0	ug/l		
AB22708	Bis(2-ethylhexyl)phthalate CAS: 117-81-7	<170	ug/l		
AB22708	Carbazole CAS: 86-74-8	<80.0	ug/l		
AB22708	Chrysene CAS: 218-01-9	<28.0	ug/l		
AB22708	Dibenzo(a,h)anthracene CAS: 53-70-3	<66.0	ug/l		
AB22708	Dibenzofuran CAS: 132-64-9	<16.0	ug/l		
AB22708	Diethyl phthalate CAS: 84-66-2	<50.0	ug/l		

P.O. Box 1646 • Decatur, Alabama 35602 • (256) 350-0846 • Fax: (256) 350-0686

ENERSOLV a Solutions Company

SAMPLE RESULTS REPORT

Report Date: 7/9/10
Report Time: 14:06

REPORT TO

Shannon Sutton
Terrell Technical Services
9582 Madison Boulevard Suite 9
Madison, AL 35758

ENERSOLV maintains Laboratory Accreditation Bureau accreditation to ISO/IEC 17025:2005 for the specific tests listed in L-A-B Certificate #L2239 Testing. Some tests included in this report may not be covered by this accreditation. Tests within the scope of this accreditation are indicated by an asterisk (*).

Cert. No. L2239 Testing
ISO 17025
EPA/ADEM Certification
No. 40160

This report may contain information that is confidential and/or proprietary. This information is intended for the addressee only and may not be copied or disseminated without the express consent of ENERSOLV Corporation.

Sample ID	Analyte Name	Result	Units	Qual	Regulatory Limit
AB22708	Dimethyl phthalate CAS: 131-11-3	<40.0	ug/l		
AB22708	Di-n-butylphthalate CAS: 84-74-2	<38.0	ug/l		
AB22708	Di-n-octylphthalate CAS: 117-84-0	<78.0	ug/l		
AB22708	Fluoranthene CAS: 206-44-0	<34.0	ug/l		
AB22708	Fluorene CAS: 86-73-7	<38.0	ug/l		
AB22708	Hexachlorobenzene CAS: 118-74-1	<48.0	ug/l		
AB22708	Hexachlorobutadiene CAS: 87-68-3	<70.0	ug/l		
AB22708	Hexachlorocyclopentadiene CAS: 77-47-4	<62.0	ug/l		
AB22708	Hexachloroethane CAS: 67-72-1	<68.0	ug/l		
AB22708	Indeno(1,2,3-cd)pyrene CAS: 193-39-5	<44.0	ug/l		
AB22708	Isophorone CAS: 78-59-1	<32.0	ug/l		
AB22708	Naphthalene CAS: 91-20-3	40.5	ug/l		
AB22708	n-Decane CAS: 124-18-5	<82.0	ug/l		
AB22708	Nitrobenzene CAS: 98-95-3	<30.0	ug/l		
AB22708	N-Nitrosodimethylamine CAS: 62-75-9	<74.0	ug/l		
AB22708	N-Nitrosodi-n-propylamine CAS: 621-64-7	<26.0	ug/l		
AB22708	N-Nitrosodiphenylamine CAS: 86-30-6	<28.0	ug/l		
AB22708	n-Octadecane CAS: 593-45-3	<50.0	ug/l		
AB22708	Pentachlorophenol CAS: 87-86-5	<200	ug/l		
AB22708	Phenanthrene CAS: 85-01-8	<22.0	ug/l		
AB22708	Phenol CAS: 108-95-2	289	ug/l		
AB22708	Pyrene CAS: 129-00-0	<40.0	ug/l		
AB22708	Pyridine CAS: 0-86-1	158	ug/l		

P.O. Box 1646 • Decatur, Alabama 35602 • (256) 350-0846 • Fax: (256) 350-0686

ENERSOLV
a Solutions Company

SAMPLE RESULTS REPORT

Report Date: 7/9/10
Report Time: 14:06

REPORT TO

Shannon Sutton
Terrell Technical Services
9582 Madison Boulevard Suite 9
Madison, AL 35758

ENERSOLV maintains Laboratory Accreditation Bureau accreditation to ISO/IEC 17025:2005 for the specific tests listed in L-A-B Certificate #L2239 Testing. Some tests included in this report may not be covered by this accreditation. Tests within the scope of this accreditation are indicated by an asterisk (*).

Cert. No. L2239 Testing
ISO 17025
EPA/ADEM Certification
No. 40160

This report may contain information that is confidential and/or proprietary. This information is intended for the addressee only and may not be copied or disseminated without the express consent of ENERSOLV Corporation.

Sample ID	Analyte Name	Result	Units	Qual	Regulatory Limit
AB22708	Arsenic	<0.104	mg/l		
AB22708	Barium	0.0263	mg/l		
AB22708	Cadmium	<0.006	mg/l		
AB22708	Chromium	<0.02	mg/l		
AB22708	Lead	<0.05	mg/l		
AB22708	Selenium	<0.10	mg/l		
AB22708	Silver	<0.02	mg/l		
AB22708	Flashpoint	>150	deg. F		
AB22708	Total Mercury CAS: 7439-97-6	<0.00200	mg/l		
AB22708	Reactive Sulfide	32.0	mg/l		

Data Qualifiers:
B: Estimated BOD/CBOD value - final dissolved oxygen value less than 1.0 mg/l.
D: Estimated BOD/CBOD value - sample dissolved oxygen depletion less than method required 2.0 mg/l.
G: Glucose/Glutamic Acid standard outside quality control criteria for BOD/CBOD.
H: Sample beyond accepted holding time.
J: Estimated value- the analyte was positively identified; the quantitation is an estimation (e.g. matrix interference, outside calibration range).
N: Presumptive evidence of presence (parameter tentatively identified based on mass spectral library search; quality control requirements confirmation was not met, i.e., presence of analyte was not confirmed by alternative procedure.
Q: One or more quality control criteria (LCS, surrogate spike recovery, continued calibration, etc.) failed. Data may be estimated or biased.
Y: Analysis performed from improperly preserved sample.

P.O. Box 1646 • Decatur, Alabama 35602 • (256) 350-0846 • Fax: (256) 350-0686

ENERSOLV
a Solutions Company

SAMPLE RESULTS REPORT

Report Date: 7/9/10
Report Time: 14:06

REPORT TO

Shannon Sutton
Terrell Technical Services
9582 Madison Boulevard Suite 9
Madison, AL 35758

ENERSOLV maintains Laboratory Accreditation Bureau accreditation to ISO/IEC 17025:2005 for the specific tests listed in L-A-B Certificate #L2239 Testing. Some tests included in this report may not be covered by this accreditation. Tests within the scope of this accreditation are indicated by an asterisk (*).

Cert. No. L2239 Testing
ISO 17025
EPA/ADEM Certification
No. 40160

This report may contain information that is confidential and/or proprietary. This information is intended for the addressee only and may not be copied or disseminated without the express consent of ENERSOLV Corporation.

Sample ID	Analyte Name	Result	Units	Qual	Regulatory Limit

Analysis Information

Sample ID	Analysis	Method	Analyst	Analysis Start Date/Time		BOD/CBOD/Fecal Analysis End Date/Time
AB22707	Base/Neutrals and Acid Extractables	EPA 8270	ET/AJW	07/08/2010	14:32	
AB22707	Flashpoint	EPA 1010	JW	07/07/2010	14:50	
AB22707	RCRA ICP Metals (Aqueous)	EPA 6010	KW	07/09/2010	13:22	
AB22707	Reactive Sulfide	SW846	JLP	07/08/2010	06:55	
AB22707	Total Mercury	EPA 7470A	KW	07/08/2010	13:00	
AB22707	Volatile Organic Compounds	EPA 8260	FDW	07/07/2010	16:40	
AB22708	Base/Neutrals and Acid Extractables	EPA 8270	ET/AJW	07/08/2010	15:00	
AB22708	Flashpoint	EPA 1010	JW	07/07/2010	14:50	
AB22708	RCRA ICP Metals (Aqueous)	EPA 6010	KW	07/09/2010	13:28	
AB22708	Reactive Sulfide	SW846	JLP	07/08/2010	06:55	
AB22708	Total Mercury	EPA 7470A	KW	07/08/2010	13:00	
AB22708	Volatile Organic Compounds	EPA 8260	FDW	07/07/2010	16:14	

P.O. Box 1646 • Decatur, Alabama 35602 • (256) 350-0846 • Fax: (256) 350-0686

ENERSOLV
a Solutions Company

ANALYSIS REQUEST AND CHAIN OF CUSTODY RECORD
2220 BELTLINE ROAD SW DECATUR, ALABAMA 35601
(256)-350-0846

COC NUMBER	33846		
PAGE	1	of	1
TERRELL TECHNICAL			

COMPANY/CLIENT NAME	ACCOUNT NUMBER	QUOTE NUMBER	ENERSOLV PROJECT NUMBER
Terrell Technical Services	2811		
CLIENT POINT OF CONTACT	CLIENT PHONE		CLIENT P.O. NUMBER
Shannon Sutton	461-9278		

CLIENT ADDRESS	CITY	STATE	ZIP CODE
9582 Madison Blvd Suite 9	Madison	AL	35758

SAMPLE COLLECTED BY

EXPEDITED REPORT DELIVERY (SURCHARGE)

DATE DUE (REQUIRED)

ENERSOLV LAB NO.	SAMPLE (USE ONE LINE PER CONTAINER) DESCRIPTION	DATE	TIME	GRAB	COMP	#RCRA Metals	$8260	$8270	FP	Reacitve Sulfide	~~TOX Sub~~							
A327707	CSB-100625-W1	7/7/2010				X	X	X	X	X	~~X~~							
	FS-Neutralent																	

Comments: Sample volume removed for metals and acidified >16 hours to analyzing. KGS
Received 2 flash pt, Sulfide Bottle Did not Receive metals Bottle

~~SAMPLE~~ TEMP. REC'D @ 13.3°

Field Information

Sampler		pH su		TRC mg/l		DO mg/l		Temp deg C	
Start Date		Date		Date		Date		Date	
Start Time		Time		Time		Time		Time	
Stop Date		Analyst		Analyst		Analyst		Analyst	
Stop Time		SM 4500H+		SM 4500-Cl D		SM 4500-O G		SM 2550B	

Qty	Type	Vol.	Preserv.	< 2	>12.5	Parameter
1	Plastic	Pint	HNO3			RCRA Metals
1	Glass	Amber Liter	Plain			625
2/2	Glass	40ml Vials	Plain/HCL			624
1	Plastic	Pint	Plain			FP, Rec-Sulfide
1	Glass	Amber Liter	Plain			TOX

RELINQUISHED BY: (SIGNATURE)	DATE	TIME	RELINQUISHED BY: (SIGNATURE)	DATE	TIME	RELINQUISHED BY: (SIGNATURE)	DATE	TIME
[signature]	7/7/10							
RECEIVED BY: (SIGNATURE)	**DATE**	**TIME**	**RECEIVED BY: (SIGNATURE)**	**DATE**	**TIME**	**RECEIVED BY: (SIGNATURE)**	**DATE**	**TIME**

RECEIVED FOR LABORATORY USE BY: (SIGNATURE)	DATE	TIME	SAMPLE STATUS:
[signature]	7.7.10	1300	☐ Accepted ☐ Rejected ☑ Accepted with Exception

Enersolv Form FLD-020-SOP A rev. 4

ENERSOLV
A Solutions Company

ANALYSIS REQUEST AND CHAIN OF CUSTODY RECORD
2220 BELTLINE ROAD SW DECATUR, ALABAMA 35601
(256)-350-0846

COC NUMBER	37463		
PAGE	1	of	1
TERRELL TECHNICAL			

COMPANY/CLIENT NAME	ACCOUNT NUMBER	QUOTE NUMBER	ENERSOLV PROJECT NUMBER
Terrell Technical Services	2811		
CLIENT POINT OF CONTACT	CLIENT PHONE		CLIENT P.O. NUMBER
Shannon Sutton	461-9278		
CLIENT ADDRESS	CITY	STATE	ZIP CODE
9582 Madison Blvd Suite 9	Madison	AL	35758
SAMPLE COLLECTED BY	EXPEDITED REPORT DELIVERY (SURCHARGE)		
	DATE DUE (REQUIRED)		

REQUIRED ANALYSES

ENERSOLV LAB NO.	SAMPLE (USE ONE LINE PER CONTAINER) DESCRIPTION	DATE	TIME	GRAB	COMP	#RCRA Metals	$8260	$8270	FP	Reacitve Sulfide	~~TOX Sub~~								
A337708	CSB- 1001627 - W1	7/7/10				X	X	X	X	X	X								
	H_2O Neutralant.																		

Comments: Sample volume removed for metals and acidified >16 hours prior to ~~analyzing~~ SAMPLE TEMP REC'D @ 13.3
Did not Recieve a metal Bottle Received 2 for flash pt & sul fide

Field Information

Sampler		pH su		TRC mg/l		DO mg/l		Temp deg C	
Start Date		Date		Date		Date		Date	
Start Time		Time		Time		Time		Time	
Stop Date		Analyst		Analyst		Analyst		Analyst	
Stop Time		SM 4500H+		SM 4500-Cl D		SM 4500-O G		SM 2550B	

Qty	Type	Vol.	Preserv.	< 2	>12.5	Parameter
1	Plastic	Pint	HNO3			RCRA Metals
1	Glass	Amber Liter	Plain			625
2/2	Glass	40ml Vials	Plain/HCL			624
1	Plastic	Pint	Plain			FP, Rec-Sulfide
1	Glass	Amber Liter	Plain			TOX

RELINQUISHED BY: (SIGNATURE)	DATE	TIME	RELINQUISHED BY: (SIGNATURE)	DATE	TIME	RELINQUISHED BY: (SIGNATURE)	DATE	TIME
[signature]	7/7/10							
RECEIVED BY: (SIGNATURE)	DATE	TIME	RECEIVED BY: (SIGNATURE)	DATE	TIME	RECEIVED BY: (SIGNATURE)	DATE	TIME

RECEIVED FOR LABORATORY USE BY: (SIGNATURE)	DATE	TIME	SAMPLE STATUS:
[signature]	7/7/10	1300	☐ Accepted ☐ Rejected ☑ Accepted with Exception

Enersolv Form FLD-020-SOP A rev. 4

ENERSOLV
a Solutions Company

July 30, 2010

Shannon Sutton
Terrell Technical Services
9582 Madison Boulevard Suite 9
Madison, AL 35758

We appreciate the opportunity to provide our services to you on this project. Please find attached the data for the sample(s) listed below:

Sample ID Number	Sample Description	Date Collected	Date Submitted
AB24484	RSA 100716-W1	7/26/10	7/26/10
AB24485 FM Smoke Neutralent	RSA 100717-W1	7/26/10	7/26/10
AB24486	RSA 100721-W1	7/26/10	7/26/10

ENERSOLV maintains a quality system compliant with **ISO 17025:2005** and meets the relevant quality system requirements of **ISO 9001:2000**. Although not all tests performed by *ENERSOLV* are covered by this quality system, all tests have been conducted in accordance with *ENERSOLV* Standard Operating Procedures and Quality Control Program using, where applicable, U.S.E.P.A. approved methodology.

This cover page is an integral part of your report. *ENERSOLV* considers this report your official record. This information shall remain in *ENERSOLV*'s active database for a period of one (1) calendar year before archiving. Any replacement of this information after archiving may result in an administrative fee to cover the cost of retrieval.

If you have any questions or would like more information regarding these analyses, please call us at (256) 350-0846.

Reviewed by:

Karen Sutton

Karen Sutton
Vice President Client Services

P.O. Box 1646 • Decatur, Alabama 35602 • (256) 350-0846 • Fax: (256) 350-0686

ENERSOLV
a Solutions Company

SAMPLE RESULTS REPORT

Report Date: 7/30/10
Report Time: 8:32

REPORT TO

Shannon Sutton
Terrell Technical Services
9582 Madison Boulevard Suite 9
Madison, AL 35758

ENERSOLV maintains Laboratory Accreditation Bureau accreditation to ISO/IEC 17025:2005 for the specific tests listed in L-A-B Certificate #L2239 Testing. Some tests included in this report may not be covered by this accreditation. Tests within the scope of this accreditation are indicated by an asterisk (*).

Cert. No. L2239 Testing
ISO 17025
EPA/ADEM Certification
No. 40160

This report may contain information that is confidential and/or proprietary. This information is intended for the addressee only and may not be copied or disseminated without the express consent of ENERSOLV Corporation.

Sample Point: RSA 100717-W1 **Collected: 07/26/2010** **Submitted: 07/26/2010**

Sample ID	Analyte Name	Result	Units	Qual	Regulatory Limit
AB24485	1,1,1,2-Tetrachloroethane CAS: 630-20-6	<30	ug/l		
AB24485	1,1,1-Trichloroethane CAS: 71-55-6	<30	ug/l		
AB24485	1,1,2,2-Tetrachloroethane CAS: 79-34-5	<30	ug/l		
AB24485	1,1,2-Trichloroethane CAS: 79-00-5	<30	ug/l		
AB24485	1,1-Dichloroethane CAS: 75-34-3	<30	ug/l		
AB24485	1,1-Dichloroethylene CAS: 75-35-4	<30	ug/l		
AB24485	1,1-Dichloropropene CAS: 563-58-6	<30	ug/l		
AB24485	1,2,3-Trichlorobenzene CAS: 87-61-6	<30	ug/l		
AB24485	1,2,3-Trichloropropane CAS: 96-18-4	<30	ug/l		
AB24485	1,2,4-Trichlorobenzene CAS: 120-82-1	<30	ug/l		
AB24485	1,2,4-Trimethylbenzene CAS: 95-63-6	<30	ug/l		
AB24485	1,2-Dibromo-3-chloropropane CAS: 96-12-8	<30	ug/l		
AB24485	1,2-Dibromoethane CAS: 106-93-4	<30	ug/l		
AB24485	1,2-Dichlorobenzene CAS: 95-50-1	<30	ug/l		
AB24485	1,2-Dichloroethane CAS: 107-06-2	<30	ug/l		
AB24485	1,2-Dichloropropane CAS: 78-87-5	<30	ug/l		
AB24485	1,3,5-Trimethylbenzene CAS: 108-67-8	<30	ug/l		
AB24485	1,3-Dichlorobenzene CAS: 541-73-1	<30	ug/l		
AB24485	1,3-Dichloropropane CAS: 142-28-9	<30	ug/l		
AB24485	1,4-Dichlorobenzene CAS: 106-46-7	<30	ug/l		
AB24485	2,2-Dichloropropane CAS: 590-20-7	<30	ug/l		
AB24485	2-Chloroethylvinyl ether CAS: 110-75-8	<30	ug/l		

P.O. Box 1646 • Decatur, Alabama 35602 • (256) 350-0846 • Fax: (256) 350-0686

ENERSOLV a Solutions Company

SAMPLE RESULTS REPORT

Report Date: 7/30/10
Report Time: 8:32

REPORT TO

Shannon Sutton
Terrell Technical Services
9582 Madison Boulevard Suite 9
Madison, AL 35758

ENERSOLV maintains Laboratory Accreditation Bureau accreditation to ISO/IEC 17025:2005 for the specific tests listed in L-A-B Certificate #L2239 Testing. Some tests included in this report may not be covered by this accreditation. Tests within the scope of this accreditation are indicated by an asterisk (*).

Cert. No. L2239 Testing
ISO 17025
EPA/ADEM Certification
No. 40160

This report may contain information that is confidential and/or proprietary. This information is intended for the addressee only and may not be copied or disseminated without the express consent of ENERSOLV Corporation.

Sample ID	Analyte Name	Result	Units	Qual	Regulatory Limit
AB24485	2-Chlorotoluene CAS: 95-49-8	<30	ug/l		
AB24485	4-Chlorotoluene CAS: 106-43-4	<30	ug/l		
AB24485	4-Isopropyltoluene CAS: 99-87-6	<30	ug/l		
AB24485	Benzene CAS: 71-43-2	<30	ug/l		
AB24485	Bromobenzene CAS: 108-86-1	<30	ug/l		
AB24485	Bromochloromethane CAS: 74-97-5	<30	ug/l		
AB24485	Bromodichloromethane CAS: 75-27-4	<30	ug/l		
AB24485	Bromoform CAS: 75-25-2	<30	ug/l		
AB24485	Bromomethane CAS: 74-83-9	<50	ug/l		
AB24485	Carbon tetrachloride CAS: 56-23-5	<30	ug/l		
AB24485	Chlorobenzene CAS: 108-90-7	<30	ug/l		
AB24485	Chloroethane CAS: 75-00-3	<50	ug/l		
AB24485	Chloroform CAS: 67-66-3	<30	ug/l		
AB24485	Chloromethane (Methyl chloride) CAS: 74-87-3	<50	ug/l		
AB24485	cis-1,2-Dichloroethylene CAS: 156-59-4	<30	ug/l		
AB24485	cis-1,3-Dichloropropylene CAS: 10061-01-5	<30	ug/l		
AB24485	Dibromochloromethane CAS: 124-48-1	<30	ug/l		
AB24485	Dibromomethane (Methylene bromide) CAS: 74-93-3	<30	ug/l		
AB24485	Dichlorodifluoromethane CAS: 75-71-8	<30	ug/l		
AB24485	Ethyl benzene CAS: 100-41-4	<30	ug/l		
AB24485	Hexachlorobutadiene CAS: 87-68-3	<30	ug/l		
AB24485	Isopropylbenzene CAS: 98-82-8	<30	ug/l		
AB24485	m & p-Xylene CAS: 108-38-3/106-42-3	<30	ug/l		

P.O. Box 1646 • Decatur, Alabama 35602 • (256) 350-0846 • Fax: (256) 350-0686

ENERSOLV a Solutions Company

SAMPLE RESULTS REPORT

Report Date: 7/30/10
Report Time: 8:32

REPORT TO

Shannon Sutton
Terrell Technical Services
9582 Madison Boulevard Suite 9
Madison, AL 35758

ENERSOLV maintains Laboratory Accreditation Bureau accreditation to ISO/IEC 17025:2005 for the specific tests listed in L-A-B Certificate #L2239 Testing. Some tests included in this report may not be covered by this accreditation. Tests within the scope of this accreditation are indicated by an asterisk (*).

Cert. No. L2239 Testing
ISO 17025
EPA/ADEM Certification
No. 40160

This report may contain information that is confidential and/or proprietary. This information is intended for the addressee only and may not be copied or disseminated without the express consent of ENERSOLV Corporation.

Sample ID	Analyte Name	Result	Units	Qual	Regulatory Limit
AB24485	Methyl Ethyl Ketone CAS: 78-93-3	<50	ug/l		
AB24485	Methylene chloride (Dichloromethane) CAS: 75-09-2	<50	ug/l		
AB24485	Naphthalene CAS: 91-20-3	<30	ug/l		
AB24485	n-Butylbenzene CAS: 104-51-8	<30	ug/l		
AB24485	n-Propylbenzene CAS: 103-65-1	<30	ug/l		
AB24485	o-Xylene CAS: 95-47-6	<30	ug/l		
AB24485	sec-Butylbenzene CAS: 135-98-8	<30	ug/l		
AB24485	Styrene CAS: 100-42-5	<30	ug/l		
AB24485	tert-Butylbenzene CAS: 98-06-6	<30	ug/l		
AB24485	Tetrachloroethylene CAS: 127-18-4	<30	ug/l		
AB24485	Toluene CAS: 108-88-3	<30	ug/l		
AB24485	trans-1,2-Dichloroethylene CAS: 156-60-5	<30	ug/l		
AB24485	trans-1,3-Dichloropropylene CAS: 10061-02-6	<30	ug/l		
AB24485	Trichloroethylene CAS: 79-01-6	<30	ug/l		
AB24485	Trichlorofluoromethane CAS: 75-69-4	<50	ug/l		
AB24485	Vinyl chloride CAS: 75-01-4	<50	ug/l		
AB24485	1,2,4-Trichlorobenzene CAS: 120-82-1	<95.0	ug/l	Q	
AB24485	1,2-Dichlorobenzene CAS: 95-50-1	<110	ug/l	Q	
AB24485	1,2-Diphenylhydrazine as Azobenzene CAS: 122-66-7	<85.0	ug/l	Q	
AB24485	1,3-Dichlorobenzene CAS: 541-73-1	<110	ug/l	Q	
AB24485	1,4-Dichlorobenzene CAS: 106-46-7	<90.0	ug/l	Q	
AB24485	2,3-Dichloroanaline CAS: 608-27-5	<65.0	ug/l	Q	
AB24485	2,4,5-Trichlorophenol CAS: 95-95-4	<90.0	ug/l	Q	

P.O. Box 1646 • Decatur, Alabama 35602 • (256) 350-0846 • Fax: (256) 350-0686

ENERSOLV
a Solutions Company

SAMPLE RESULTS REPORT

Report Date: 7/30/10
Report Time: 8:32

REPORT TO

Shannon Sutton
Terrell Technical Services
9582 Madison Boulevard Suite 9
Madison, AL 35758

ENERSOLV maintains Laboratory Accreditation Bureau accreditation to ISO/IEC 17025:2005 for the specific tests listed in L-A-B Certificate #L2239 Testing. Some tests included in this report may not be covered by this accreditation. Tests within the scope of this accreditation are indicated by an asterisk (*).

Cert. No. L2239 Testing
ISO 17025
EPA/ADEM Certification
No. 40160

This report may contain information that is confidential and/or proprietary. This information is intended for the addressee only and may not be copied or disseminated without the express consent of ENERSOLV Corporation.

Sample ID	Analyte Name	Result	Units	Qual	Regulatory Limit
AB24485	2,4,6-Trichlorophenol CAS: 88-06-2	<90.0	ug/l	Q	
AB24485	2,4-Dichlorophenol CAS: 120-83-2	<45.0	ug/l	Q	
AB24485	2,4-Dimethylphenol CAS: 105-67-9	<500	ug/l	Q	
AB24485	2,4-Dinitrophenol CAS: 51-28-5	<500	ug/l	Q	
AB24485	2,4-Dinitrotoluene CAS: 121-14-2	<40.0	ug/l	Q	
AB24485	2,6-Dinitrotoluene CAS: 606-20-2	<45.0	ug/l	Q	
AB24485	2-Chloronaphthalene CAS: 91-58-7	<70.0	ug/l	Q	
AB24485	2-Chlorophenol CAS: 95-57-8	<75.0	ug/l	Q	
AB24485	2-Methyl-4,6-dinitrophenol CAS: 534-52-1	<500	ug/l	Q	
AB24485	2-Methylnaphthalene CAS: 91-57-6	<25.0	ug/l	Q	
AB24485	2-Methylphenol (o-cresol) CAS: 95-8-7	<185	ug/l	Q	
AB24485	2-Nitroaniline CAS: 88-77-4	<85.0	ug/l	Q	
AB24485	2-Nitrophenol CAS: 88-75-5	<90.0	ug/l	Q	
AB24485	3,3'-Dichlorobenzidine CAS: 91-94-1	<120	ug/l	Q	
AB24485	3-Nitroaniline CAS: 99-09-2	<75.0	ug/l	Q	
AB24485	4-Bromophenyl phenyl ether CAS: 101-55-3	<65.0	ug/l	Q	
AB24485	4-Chloro-3-methylphenol CAS: 59-50-7	<65.0	ug/l	Q	
AB24485	4-Chloroaniline CAS: 106-47-8	<105	ug/l	Q	
AB24485	4-Chlorophenyl phenyl ether CAS: 7005-72-3	<50.0	ug/l	Q	
AB24485	4-Methylphenol (p-cresol) CAS: 8001-28-3	<255	ug/l	Q	
AB24485	4-Nitroaniline CAS: 100-01-6	<90.0	ug/l	Q	
AB24485	4-Nitrophenol CAS: 100-02-7	<500	ug/l	Q	
AB24485	Acenaphthene CAS: 83-32-9	<75.0	ug/l	Q	

P.O. Box 1646 • Decatur, Alabama 35602 • (256) 350-0846 • Fax: (256) 350-0686

ENERSOLV a Solutions Company

SAMPLE RESULTS REPORT

Report Date: 7/30/10
Report Time: 8:32

REPORT TO

Shannon Sutton
Terrell Technical Services
9582 Madison Boulevard Suite 9
Madison, AL 35758

ENERSOLV maintains Laboratory Accreditation Bureau accreditation to ISO/IEC 17025:2005 for the specific tests listed in L-A-B Certificate #L2239 Testing. Some tests included in this report may not be covered by this accreditation. Tests within the scope of this accreditation are indicated by an asterisk (*).

Cert. No. L2239 Testing
ISO 17025
EPA/ADEM Certification
No. 40160

This report may contain information that is confidential and/or proprietary. This information is intended for the addressee only and may not be copied or disseminated without the express consent of ENERSOLV Corporation.

Sample ID	Analyte Name	Result	Units	Qual	Regulatory Limit
AB24485	Acenaphthylene CAS: 208-96-8	<110	ug/l	Q	
AB24485	Acetophenone CAS: 173731-4	<90.0	ug/l	Q	
AB24485	Aniline CAS: 62-53-3	<170	ug/l	Q	
AB24485	Anthracene CAS: 120-12-7	<55.0	ug/l	Q	
AB24485	a-Terpineol CAS: 98-55-5	<90.0	ug/l	Q	
AB24485	Benzidine CAS: 92-87-5	<750	ug/l	Q	
AB24485	Benzo(a)anthracene CAS: 56-55-3	<80.0	ug/l	Q	
AB24485	Benzo(a)pyrene CAS: 50-32-8	<75.0	ug/l	Q	
AB24485	Benzo(b)fluoranthene CAS: 205-99-2	<75.0	ug/l	Q	
AB24485	Benzo(ghi)perylene CAS: 191-24-2	<100	ug/l	Q	
AB24485	Benzo(k)fluoranthene CAS: 207-08-9	<90.0	ug/l	Q	
AB24485	Benzoic Acid CAS: 65-85-0	<500	ug/l	Q	
AB24485	Benzyl Alcohol CAS: 100-51-6	<65.0	ug/l	Q	
AB24485	Benzyl butyl phthalate CAS: 85-68-7	<200	ug/l	Q	
AB24485	Bis(2-chloroethoxy)methane CAS: 111-91-1	<50.0	ug/l	Q	
AB24485	Bis(2-chloroethyl)ether CAS: 111-44-4	<55.0	ug/l	Q	
AB24485	Bis(2-chloroisopropyl)ether CAS: 108-60-1	<60.0	ug/l	Q	
AB24485	Bis(2-ethylhexyl)phthalate CAS: 117-81-7	<425	ug/l	Q	
AB24485	Carbazole CAS: 86-74-8	<200	ug/l	Q	
AB24485	Chrysene CAS: 218-01-9	<70.0	ug/l	Q	
AB24485	Dibenzo(a,h)anthracene CAS: 53-70-3	<165	ug/l	Q	
AB24485	Dibenzofuran CAS: 132-64-9	<40.0	ug/l	Q	
AB24485	Diethyl phthalate CAS: 84-66-2	<125	ug/l	Q	

P.O. Box 1646 • Decatur, Alabama 35602 • (256) 350-0846 • Fax: (256) 350-0686

ENERSOLV a Solutions Company

Report Date: 7/30/10
Report Time: 8:32

SAMPLE RESULTS REPORT

REPORT TO

Shannon Sutton
Terrell Technical Services
9582 Madison Boulevard Suite 9
Madison, AL 35758

ENERSOLV maintains Laboratory Accreditation Bureau accreditation to ISO/IEC 17025:2005 for the specific tests listed in L-A-B Certificate #L2239 Testing. Some tests included in this report may not be covered by this accreditation. Tests within the scope of this accreditation are indicated by an asterisk (*).

Cert. No. L2239 Testing
ISO 17025
EPA/ADEM Certification
No. 40160

This report may contain information that is confidential and/or proprietary. This information is intended for the addressee only and may not be copied or disseminated without the express consent of ENERSOLV Corporation.

Sample ID	Analyte Name	Result	Units	Qual	Regulatory Limit
AB24485	Dimethyl phthalate CAS: 131-11-3	<100	ug/l	Q	
AB24485	Di-n-butylphthalate CAS: 84-74-2	<95.0	ug/l	Q	
AB24485	Di-n-octylphthalate CAS: 117-84-0	<195	ug/l	Q	
AB24485	Fluoranthene CAS: 206-44-0	<85.0	ug/l	Q	
AB24485	Fluorene CAS: 86-73-7	<95.0	ug/l	Q	
AB24485	Hexachlorobenzene CAS: 118-74-1	273	ug/l	Q	
AB24485	Hexachlorobutadiene CAS: 87-68-3	<175	ug/l	Q	
AB24485	Hexachlorocyclopentadiene CAS: 77-47-4	<155	ug/l	Q	
AB24485	Hexachloroethane CAS: 67-72-1	<170	ug/l	Q	
AB24485	Indeno(1,2,3-cd)pyrene CAS: 193-39-5	<110	ug/l	Q	
AB24485	Isophorone CAS: 78-59-1	<80.0	ug/l	Q	
AB24485	Naphthalene CAS: 91-20-3	<40.0	ug/l	Q	
AB24485	n-Decane CAS: 124-18-5	<205	ug/l	Q	
AB24485	Nitrobenzene CAS: 98-95-3	<75.0	ug/l	Q	
AB24485	N-Nitrosodimethylamine CAS: 62-75-9	<185	ug/l	Q	
AB24485	N-Nitrosodi-n-propylamine CAS: 621-64-7	<65.0	ug/l	Q	
AB24485	N-Nitrosodiphenylamine CAS: 86-30-6	<70.0	ug/l	Q	
AB24485	n-Octadecane CAS: 593-45-3	<125	ug/l	Q	
AB24485	Pentachlorophenol CAS: 87-86-5	<500	ug/l	Q	
AB24485	Phenanthrene CAS: 85-01-8	<55.0	ug/l	Q	
AB24485	Phenol CAS: 108-95-2	<45.0	ug/l	Q	
AB24485	Pyrene CAS: 129-00-0	<100	ug/l	Q	
AB24485	Pyridine CAS: 0-86-1	<100	ug/l	Q	

P.O. Box 1646 • Decatur, Alabama 35602 • (256) 350-0846 • Fax: (256) 350-0686

ENERSOLV
a Solutions Company

SAMPLE RESULTS REPORT

Report Date: 7/30/10
Report Time: 8:32

REPORT TO

Shannon Sutton
Terrell Technical Services
9582 Madison Boulevard Suite 9
Madison, AL 35758

ENERSOLV maintains Laboratory Accreditation Bureau accreditation to ISO/IEC 17025:2005 for the specific tests listed in L-A-B Certificate #L2239 Testing. Some tests included in this report may not be covered by this accreditation. Tests within the scope of this accreditation are indicated by an asterisk (*).

Cert. No. L2239 Testing
ISO 17025
EPA/ADEM Certification
No. 40160

This report may contain information that is confidential and/or proprietary. This information is intended for the addressee only and may not be copied or disseminated without the express consent of ENERSOLV Corporation.

Sample ID	Analyte Name	Result	Units	Qual	Regulatory Limit
AB24485	Arsenic	<0.0520	mg/l		
AB24485	Barium	0.108	mg/l		
AB24485	Cadmium	<0.00300	mg/l		
AB24485	Chromium	<0.0100	mg/l		
AB24485	Lead	0.0328	mg/l		
AB24485	Selenium	<0.0500	mg/l		
AB24485	Silver	0.0264	mg/l		
AB24485	Flashpoint	>150	deg. F		
AB24485	Total Mercury CAS: 7439-97-6	<0.0200	mg/l		
AB24485	Reactive Sulfide	64.0	mg/l		

P.O. Box 1646 • Decatur, Alabama 35602 • (256) 350-0846 • Fax: (256) 350-0686

ENERSOLV
A Solutions Company

ANALYSIS REQUEST AND CHAIN OF CUSTODY RECORD
2220 BELTLINE ROAD SW DECATUR, ALABAMA 35601
(256)-350-0846

COC NUMBER	23429		
PAGE	1	of	1
TERRELL TECHNICAL			

COMPANY/CLIENT NAME	ACCOUNT NUMBER	QUOTE NUMBER	ENERSOLV PROJECT NUMBER
Terrell Technical Services	2811		
CLIENT POINT OF CONTACT	CLIENT PHONE		CLIENT P.O. NUMBER
Shannon Sutton	461-9278		
CLIENT ADDRESS	CITY	STATE	ZIP CODE
9582 Madison Blvd Suite 9	Madison	AL	35758
SAMPLE COLLECTED BY	EXPEDITED REPORT DELIVERY (SURCHARGE)		
	DATE DUE (REQUIRED)		

REQUIRED ANALYSES

ENERSOLV LAB NO.	SAMPLE (USE ONE LINE PER CONTAINER) DESCRIPTION	DATE	TIME	GRAB	COMP	#RCRA Metals	$8260	$8270	FP	Reacitve Sulfide	!TOX-Sub
AB24484	RSA 100716-W1 NAOH	7/26/10	0900			X	X	X	X	X	X
	FS 7/16 NEUTRALENT										
24485	RSA 100717-W1 NAOH										
	FM 7/17 NEUTRALENT										
24486	RSA 100721-W1										
	7/21 H20 /ANTI FREEZE										

Comments:

SAMPLE TEMP.
REC'D @ 22.0°C

Field Information

Sampler		pH su		TRC mg/l		DO mg/l		Temp deg C	
Start Date		Date		Date		Date		Date	
Start Time		Time		Time		Time		Time	
Stop Date		Analyst		Analyst		Analyst		Analyst	
Stop Time		SM 4500H+		SM 4500-Cl D		SM 4500-O G		SM 2550B	

Qty	Type	Vol.	Preserv.	< 2	>12.5	Parameter
1	Plastic	Pint	HNO3			RCRA Metals
1	Glass	Amber Liter	Plain			625
2/2	Glass	40ml Vials	Plain/HCL			624
1	Plastic	Pint	Plain			FP, Rec-Sulfide
1	Glass	Amber Liter	Plain			TOX

RELINQUISHED BY: (SIGNATURE)	DATE	TIME	RELINQUISHED BY: (SIGNATURE)	DATE	TIME	RELINQUISHED BY: (SIGNATURE)	DATE	TIME
[signature]	7/26/10	1000	[signature]	7/26/10	1142			
RECEIVED BY: (SIGNATURE)	DATE	TIME	RECEIVED BY: (SIGNATURE)	DATE	TIME	RECEIVED BY: (SIGNATURE)	DATE	TIME

RECEIVED FOR LABORATORY USE BY: (SIGNATURE)	DATE	TIME	SAMPLE STATUS:
[signature]	7-26-10	1142	☒ Accepted ☐ Rejected ☐ Accepted with Exception

Enersolv Form FLD-020-SOP A rev. 4

FM 1 of 3

WASTE CHARACTERIZATION REPORT

Tracking #_____

☑ *I authorize EQ – The Environmental Quality Company to choose the appropriate facility and method of waste management from the technologies offered at the EQ facilities identified below.*

☐ **Michigan Disposal Waste Treatment Plant** (Stabilization and Treatment)	49350 N. I-94 Service Drive, Belleville, MI 48111 Phone: 800-592-5489 Fax: 800-592-5329	EPA ID # MID 000 724 831
☐ **Wayne Disposal, Inc. Site #2 Landfill** (Hazardous & PCB Waste Landfill)	49350 N. I-94 Service Drive, Belleville, MI 48111 Phone: 800-592-5489 Fax: 800-592-5329	EPA ID # MID 048 090 633
☐ **EQ Detroit, Inc.** (Stabilization, Wastewater Treatment)	1923 Frederick Street, Detroit, MI 48211 Phone: 313-923-0080 Fax: 313-923-3375	EPA ID # MID 980 991 566
☐ **EQ Ohio (Envirite of Ohio)** (Stabilization and Treatment)	2050 Central Avenue, SE, Canton, OH 44707 Phone: 800-592-5489 Fax: 800-592-5329	EPA ID # OHD 980 568 992
☐ **EQ Pennsylvania (Envirite of Pennsylvania)** (Stabilization and Treatment)	730 Vogelsong Road, York,PA 17404 Phone: 800-592-5489 Fax: 800-592-5329	EPA ID # PAD 010 154 045
☐ **EQ Resource Recovery, Inc.** (Solvent Recycling, Fuel Blending, WW Treatment)	36345 Van Born Road, Romulus, MI 48174 Phone: 866-373-8357 Fax: 734-326-4033	EPA ID # MID 060 975 844
☐ **EQ Florida, Inc.** (Drum Consolidation, Labpack Decommissioning)	7202 East 8th Ave, Tampa, FL 33619 Phone: 813-623-5463 Fax: 813-628-0842	EPA ID # FLD 981 932 494
☐ **EQ Transfer & Processing** (Drum Transfer/Universal Waste Handling)	2000 Ferry Street, Detroit, MI 48211 Phone: 313-923-0080 Fax: 313-922-8419	EPA ID # MIK 939 928 313
☐ **EQ Indianapolis** (Drum Transfer/Non-Hazardous Waste Processing)	4000 West 10th Street, Indianapolis, IN 46222 Phone: 317-247-7160 Fax: 317-247-7170	EPA ID # IND 161 049 309
☐ **EQ Atlanta** (Drum Transfer/Non-Hazardous Waste Processing)	5600 Fulton Industrial Blvd SW, Atlanta, GA 30336 Phone: 404-494-3520 Fax: 404-494-3560	EPA ID # GAR 000 039 776
☐ **EQ Augusta, Inc.** (Wastewater Treatment)	3920 Goshen Industrial Blvd, Augusta, GA 30906 Phone: 706-771-9100 Fax: 706-771-9124	EPA ID # GAR 000 011 817

Please note, this profile should not be used for wastes destined to EQ Illinois (Envirite of Illinois). For more information, please contact our National Service Center at (800)592-5489.

Waste Common Name: FM Smoke Neutralant (FM) AB 24485 Sample ID

Section 1 – Generator & Customer Information

SIC/NAICS* _____

Generator EPA ID # AL 721002 0742

Generator US Army Redstone Arsenal

Facility Address 4488 Martin Road Rom A327

City Redstone Arsenal State AL Zip 35898

County _____

Mailing Address SAME

City _____ State _____ Zip _____

Generator Contact Bob Gomez

Title Manager

Phone _____ Fax _____

*For a list of NAICS codes, please refer to Section 9 of the EQ Resource Guide.

Internal Use Only: EQ Division _____

EQ Customer No. _____

Invoicing Company Show EQI

Address 700 Technology Center Drive

City Stoughton State MA Zip 02072

Country _____

Invoicing Contact Kathy Creighton

Phone 617-589-7475 Fax _____

Technical Contact Greg Norden

Phone 419 425 6067 Fax _____

Mobile _____ Pager _____

E-mail _____

Section 2 – Shipping & Packaging Information

2.1) Shipping Volume & Frequency 1-5

☑ One Time Only ☐ Year ☐ Quarter ☐ Month

2.2) DOT Shipping Name

Hazardous Waste, Liquid nos (hexachlorobenzene) 9, NA 3082 III

2.3) Is this waste surcharge exempt? ☐ Yes ☑ No

If yes, please attach a surcharge exemption form, found in Section 2 of the EQ Resource Guide.

2.4) Packaging (**check all that apply**)

☐ Bulk Solid (Yd^3 < 2000 lbs/yd^3)
☐ Bulk Solid (Ton >2000 lbs/yd^3)
☐ Bulk Liquids (Gallon)
☐ Totes, Size _____
☐ Cubic Yard Boxes/Bags
☑ Drums, Size 55
☐ Other (palletized, 5 gal. Pail, etc.) _____

Quoted bulk disposal charges for solid materials will be billed by the cubic yard, if the waste density is less than 2,000lbs./cubic yard. If waste density is greater than 2,000 lbs./cubic yard, then bulk disposal charges will be billed by the ton, regardless of the approved container.

© EQ-The Environmental Quality Company

F5
3 of 3

Section 7 – Non-Hazardous Wastes

For a complete list of non-hazardous waste codes, please refer to Section 7 of the EQ Resource Guide

Please list applicable waste code:

7.1) Is this a Michigan non-hazardous liquid industrial waste? ☑ Yes ☐ No
7.2) Is this a Universal waste? ☐ Yes ☑ No
7.3) Is this a Recyclable Commodity? (e.g.: computer monitors, free mercury, etc.) ☐ Yes ☑ No
7.4) Is this waste a recoverable petroleum product? ☐ Yes* ☑ No
7.5) Is this waste used oil as defined by 40 CFR Part 279? ☐ Yes* ☑ No

0296

If you answered 'yes' to questions 7.4 or 7.5 please attach the Waste Characterization Report Addendum found in Section 7 of the EQ Resource Guide.

Section 8 – TSCA Information

8.1) What is the concentration of PCBs in the waste? ☒ None ☐ 0-5 ppm ☐ 6-49 ppm ☐ 50-499 ppm ☐ 500+ ppm
8.2) Does the waste contain PCB contamination from a source with a concentration ≥ 50 ppm? ☐ Yes ☑ No
If you answered "no" to 8.1 and 8.2, please skip to Section 9.
8.3) Has this waste been processed into a non-liquid form? ☐ Yes ☑ No
If yes, what was the concentration of PCBs prior to processing? ☑ N/A ☐ 0-499 ppm ☐ 500+ ppm
8.4) Is the non-liquid PCB waste in the form of soil, rags, debris, or other contaminated media? ☐ Yes ☑ No
8.5) Are you a PCB capacitor manufacturer or a PCB equipment manufacturer? ☐ Yes ☑ No
8.6) Has the PCB Article (e.g., transformer, hydraulic machine, PCB-contaminated electrical equipment) been drained/flushed of all PCBs and decontaminated in accordance with 40 CFR 761.60(b)? ☑ N/A ☐ Yes ☐ No

Section 9 – Clean Air Act Information

NESHAP SIC*		
2812	2836	2875
2813	2841	2879
2816	2842	2891
2819	2843	2892
2821	2844	2893
2822	2851	2895
2823	2861	2899
2824	2865	2911
2833	2869	3312
2834	2873	4953
2835	2874	9511

9.1) Is this waste subject to regulation under 40 CFR, Part 63, Subpart DD or 40 CFR, Part 264, Subpart CC (RCRA)? ☐ Yes ☑ No
(Does the waste contain >500 ppm Volatile Organic Hazardous Air Pollutants – VOHAP's or Volatile Organic Compounds – VOC's?)
For a complete list of VOHAP's, please see Section 11 of the EQ Resource Guide
9.2) Is the site, or waste, subject to any other MACT or NESHAP? ☐ Yes, please specify: _____ ☑ No
9.3) Does this waste stream contain Benzene? ☐ Yes ☑ No
If you answered "no" to 9.3, please skip to Section 10.
9.4) Does the waste stream come from a facility with one of the SIC/NAICS codes listed under the Benzene NESHAP identified in 40 CFR 61, Subpart FF? ☐ Yes ☐ No
9.5) Is the generating source of this waste stream a facility with Total Annual Benzene (TAB) ≥10 Mg/year? ☐ Yes ☐ No
For assistance in calculating the TAB, please see the TAB Worksheet in Section 9 of the EQ Resource Guide.
If you answered "no" to question 9.4 and 9.5, please skip to Section 10.
9.6) Does the waste contain >10% water? ☐ Yes ☐ No
9.7) What is the TAB quantity for your facility? _____ Mg/Year
9.8) Does the waste contain >1.0 mg/kg total Benzene? ☐ Yes ☐ No
9.9) What is the total Benzene concentration in your waste? _____ Percent or _____ ppmw.
(Supporting analysis must be attached. Do not use TCLP analytical results. Acceptable laboratory methods include 8020, 8240, 8260, 602 and 624.)
*For a list of NAICS codes, please refer to Section 9 of the EQ Resource Guide.

Section 10 – Fuel Blending Information

10.1) Is this waste intended for fuel blending? ☐ Yes* ☐ No
*If yes, Heat value (BTU/lb.) _____ Chlorine (%) _____ Water (%) _____ Solids (%) _____
10.2) Is this waste intended for reclamation? ☐ Yes ☐ No (5-Gallon Sample required for all reclaim waste streams)

Section 11 – Constituent Information

Please identify your waste constituents from these four categories: *Underlying Hazardous Constituents (UHC's), Volatile Organic Hazardous Air Pollutants (VOHAP's), Volatile Organic Compounds (VOC's) and Toxic Release Inventory Constituents (TRI)*

Constituent	Concentration	UHC?	Constituent	Concentration	UHC?
		☐ Yes ☐ No			☐ Yes ☐ No
		☐ Yes ☐ No			☐ Yes ☐ No
		☐ Yes ☐ No			☐ Yes ☐ No
		☐ Yes ☐ No			☐ Yes ☐ No
		☐ Yes ☐ No			☐ Yes ☐ No

Please see Section 11 of the EQ Resource Guide for a list of UHC's, VOHAP's and VOC's. For a complete list of TRI constituents, please refer to 40 CFR 372.65.

Section 12 – Certification

I certify that all information (including attachments) is complete and factual and is an accurate representation of the known and suspected hazards, pertaining to the waste described herein. I authorize EQ's Resource Team to add supplemental information to the waste approval file, provided I am contacted and give verbal permission. I authorize EQ's Resource Team to obtain a sample from any waste shipment for purposes of verification and confirmation. I agree that, if EQ approves the waste described herein, all such wastes that are transported, delivered, or tendered to EQ by Generator or on Generator's behalf shall be subject to, and Generator shall be bound by, the attached Standard Terms and Conditions.

Generator Signature Robert Gorman Printed Name Robert Gorman

Company Dana Garrison - Robbins Title Environmental Protection Specialist Date 9/7/10

The generator's signature MUST appear on the EQ Waste Characterization Report. If the generator has authorized a third party to certify this document, a written notice (on generator letterhead) must accompany this submittal. Although the EQ Resource Team is authorized to make certain modifications to the information provided on this form, the addition or removal of waste codes and waste constituents must be documented by the generator.

EDS 3 of 3

Section 7 – Non-Hazardous Wastes

For a complete list of non-hazardous waste codes, please refer to Section 7 of the EQ Resource Guide

Please list applicable waste code:

7.1) Is this a Michigan non-hazardous liquid industrial waste? ☐ Yes ☒ No
7.2) Is this a Universal waste? ☐ Yes ☒ No
7.3) Is this a Recyclable Commodity? (e.g.: computer monitors, free mercury, etc.) ☐ Yes ☒ No
7.4) Is this waste a recoverable petroleum product? ☐ Yes* ☒ No
7.5) Is this waste used oil as defined by 40 CFR Part 279? ☐ Yes* ☒ No

If you answered 'yes' to questions 7.4 or 7.5 please attach the Waste Characterization Report Addendum found in Section 7 of the EQ Resource Guide.

Section 8 – TSCA Information

8.1) What is the concentration of PCBs in the waste? ☒ None ☐ 0-5 ppm ☐ 6-49 ppm ☐ 50-499 ppm ☐ 500+ ppm
8.2) Does the waste contain PCB contamination from a source with a concentration ≥ 50 ppm? ☐ Yes ☒ No
If you answered "no" to 8.1 and 8.2, please skip to Section 9.
8.3) Has this waste been processed into a non-liquid form? ☐ Yes ☒ No
If yes, what was the concentration of PCBs prior to processing? ☒ N/A ☐ 0-499 ppm ☐ 500+ ppm
8.4) Is the non-liquid PCB waste in the form of soil, rags, debris, or other contaminated media? ☐ Yes ☒ No
8.5) Are you a PCB capacitor manufacturer or a PCB equipment manufacturer? ☐ Yes ☒ No
8.6) Has the PCB Article (e.g., transformer, hydraulic machine, PCB-contaminated electrical equipment) been drained/flushed of all PCBs and decontaminated in accordance with 40 CFR 761.60(b)? ☒ N/A ☐ Yes ☐ No

Section 9 – Clean Air Act Information

NESHAP SIC*		
2812	2836	2875
2813	2841	2879
2816	2842	2891
2819	2843	2892
2821	2844	2893
2822	2851	2895
2823	2861	2899
2824	2865	2911
2833	2869	3312
2834	2873	4953
2835	2874	9511

9.1) Is this waste subject to regulation under 40 CFR, Part 63, Subpart DD or 40 CFR, Part 264, Subpart CC (RCRA)? ☐ Yes ☒ No
(Does the waste contain >500 ppm Volatile Organic Hazardous Air Pollutants – VOHAP's or Volatile Organic Compounds – VOC's?)
For a complete list of VOHAP's, please see Section 11 of the EQ Resource Guide
9.2) Is the site, or waste, subject to any other MACT or NESHAP? ☐ Yes, please specify: _____ ☒ No
9.3) Does this waste stream contain Benzene? ☐ Yes ☒ No
If you answered "no" to 9.3, please skip to Section 10.
9.4) Does the waste stream come from a facility with one of the SIC/NAICS codes listed under the Benzene NESHAP identified in 40 CFR 61, Subpart FF? ☐ Yes ☐ No
9.5) Is the generating source of this waste stream a facility with Total Annual Benzene (TAB) ≥10 Mg/year? ☐ Yes ☐ No
For assistance in calculating the TAB, please see the TAB Worksheet in Section 9 of the EQ Resource Guide.
If you answered "no" to question 9.4 and 9.5, please skip to Section 10.
9.6) Does the waste contain >10% water? ☐ Yes ☐ No
9.7) What is the TAB quantity for your facility? _____ Mg/Year
9.8) Does the waste contain >1.0 mg/kg total Benzene? ☐ Yes ☐ No
9.9) What is the total Benzene concentration in your waste? _____ Percent or _____ ppmw.

(Supporting analysis must be attached. Do not use TCLP analytical results. Acceptable laboratory methods include 8020, 8240, 8260, 602 and 624.)
*For a list of NAICS codes, please refer to Section 9 of the EQ Resource Guide.

Section 10 – Fuel Blending Information

10.1) Is this waste intended for fuel blending? ☐ Yes* ☐ No
*If yes, Heat value (BTU/lb.) _____ Chlorine (%) _____ Water (%) _____ Solids (%) _____
10.2) Is this waste intended for reclamation? ☐ Yes ☐ No (5-Gallon Sample required for all reclaim waste streams)

Section 11 – Constituent Information

Please identify your waste constituents from these four categories: ***Underlying Hazardous Constituents (UHC's), Volatile Organic Hazardous Air Pollutants (VOHAP's), Volatile Organic Compounds (VOC's) and Toxic Release Inventory Constituents (TRI)***

Constituent	Concentration	UHC?		Constituent	Concentration	UHC?	
		☐ Yes	☐ No			☐ Yes	☐ No
		☐ Yes	☐ No			☐ Yes	☐ No
		☐ Yes	☐ No			☐ Yes	☐ No
		☐ Yes	☐ No			☐ Yes	☐ No
		☐ Yes	☐ No			☐ Yes	☐ No

Please see Section 11 of the EQ Resource Guide for a list of UHC's, VOHAP's and VOC's. For a complete list of TRI constituents, please refer to 40 CFR 372.65.

Section 12 – Certification

I certify that all information (including attachments) is complete and factual and is an accurate representation of the known and suspected hazards, pertaining to the waste described herein. I authorize EQ's Resource Team to add supplemental information to the waste approval file, provided I am contacted and give verbal permission. I authorize EQ's Resource Team to obtain a sample from any waste shipment for purposes of verification and confirmation. I agree that, if EQ approves the waste described herein, all such wastes that are transported, delivered, or tendered to EQ by Generator or on Generator's behalf shall be subject to, and Generator shall be bound by, the attached Standard Terms and Conditions.

Generator Signature X Robert Forman Printed Name X Robert Forman

Company X US Army - Garrison Rock Island Title Environmental Protection Spec. Date 2/3/10

The generator's signature MUST appear on the EQ Waste Characterization Report. If the generator has authorized a third party to certify this document, a written notice (on generator letterhead) must accompany this submittal. Although the EQ Resource Team is authorized to make certain modifications to the information provided on this form, the addition or removal of waste codes and waste constituents must be documented by the generator.

ATTACHMENT C-4

EDS TREATMENT CHEMISTRY

(This page intentionally left blank.)

EDS TREATMENT CHEMISTRY

February 2016

(This page intentionally left blank.)

TABLE OF CONTENTS

Section/Paragraph	Title	Page
LIST OF ILLUSTRATIONS		Attachment C-4-iii
LIST OF TABLES		Attachment C-4-iii
ACRONYMS/ABBREVIATIONS		Attachment C-4-v
1	INTRODUCTION	Attachment C-4-1
2	CHEMICAL AGENTS	Attachment C-4-2
2.1	Toxicity and Impurities	Attachment C-4-2
3	TREATMENT (NEUTRALIZATION) REAGENTS AND SOLVENTS	Attachment C-4-2
4	TREATMENT REACTIONS	Attachment C-4-3
4.1	Sulfur Mustard Agents	Attachment C-4-3
4.1.1	Neutralization of Mustard Agent (HD, HS, and HT)	Attachment C-4-3
4.1.2	Mustard Agent Treatment References	Attachment C-4-5
4.2	Nitrogen Mustard Agent	Attachment C-4-5
4.2.1	Neutralization of HN-3	Attachment C-4-5
4.2.2	HN-3 Treatment References	Attachment C-4-7
4.3	Lewisite (L)	Attachment C-4-7
4.3.1	Neutralization of Lewisite	Attachment C-4-7
4.3.2	Lewisite Treatment References	Attachment C-4-9
4.4	Phosgene (CG)	Attachment C-4-14
4.4.1	CG Standard Treatment	Attachment C-4-14
4.4.2	Phosgene Treatment References	Attachment C-4-15
4.5	Arsenicals	Attachment C-4-16
4.5.1	Treatments for Arsenical Mixtures Containing DA and PD	Attachment C-4-16
4.5.2	Treatment for Mustard and Arsenical Mixtures	Attachment C-4-22
4.5.3	Arsenical Treatment References	Attachment C-4-22
4.6	Chloroacetophenone (CN), CNB, and CNS	Attachment C-4-22
4.6.1	Treatment of CN	Attachment C-4-22
4.6.2	Standard Treatment of CNB and CNS	Attachment C-4-22
4.6.3	CN, CNB, and CNS Treatment References	Attachment C-4-24
4.7	Smoke Compounds Treated with Sodium Hydroxide (NaOH)	Attachment C-4-24
4.7.1	Standard Procedure for FS Smoke and FM Smoke	Attachment C-4-24
4.7.2	Smoke Compounds Treated with Sodium Hydroxide (NaOH) References	Attachment C-4-26

1 (This page intentionally left blank.)

LIST OF ILLUSTRATIONS

Figure	Title	Page
C-4-1	Reaction of Sulfur Mustard with MEA	Attachment C-4-4
C-4-2	Nitrogen Mustard Reaction with Excess MEA	Attachment C-4-6

LIST OF TABLES

Table	Title	Page
C-4-1	Process Sample Analytical Results	Attachment C-4-10
C-4-2	Headspace Vapor Results	Attachment C-4-11
C-4-3	Reaction Product/Metals Analyses for Samples from DPG-94-055 and DPG-94-028	Attachment C-4-12
C-4-4	Residual DA and PD in Whole Neutralent Time Point Samples	Attachment C-4-17
C-4-5	Summary of Analytical Results for the 1:50 Loading Performed at 60°C	Attachment C-4-19
C-4-6	Summary of Analytical Results for the Solids Isolated from the 1:50 Loading at 60°C	Attachment C-4-20
C-4-7	Residual Agents in Neutralent Samples from Full-Scale Testing	Attachment C-4-21

(This page intentionally left blank.)

ACRONYMS/ABBREVIATIONS

AR	Army Regulation
As+3	arsenite
As+5	arsenate
BCVAA	bis(2-chlorovinyl)arsinous acid
BCVAOA	bis(2-chlorovinyl)arsenic acid
BR2	Blue Ring 2
CG	phosgene
$ClHO_3S$	chlorosulfonic acid
CMA	U.S. Army Chemical Materials Activity
CN	chloroacetophenone
CNB	carbon tetrachloride + chloroacetophenone + benzene
CNS	chloroacetophenone + chloropicrin + chloroform
CVAA	chlorovinylarsenous acid
CVAOA	chlorovinylarsenic acid
CWM	chemical warfare materiel
DA	diphenylchloroarsine
DAP	dichloroacetophenone
DOT	Department of Transportation
DP	diphosgene
EDS	Explosive Destruction System
FM smoke	titanium tetrachloride + lead tetroxide
FS smoke	sulfur trioxide + chlorosulfonic acid + lead tetroxide
FTIR	Fourier Transformed Infra-red
gal	gallon
GTR	German Traktor Rocket

HEAES	[bis[2-(2-hydroxyethyl-amino)ethyl] sulfide
HETM	N-(2-hydroxyethl)-thiomorpholine
HN-3	nitrogen mustard
HS	sulfur mustard
HT	mustard-T mixture
L	lewisite
lb	pound
MEA	monoethanolamine
MEA•HCl	MEA hydrochloride
mg	milligram
mg/kg	milligram per kilogram
mg/L	milligram per liter
mL	milliliter
mw	molecular weight
MMD-1	Munitions Management Device, Version 1
Na_2CO_3	sodium carbonate
NaCl	sodium chloride
$NaMnO_4$	sodium permanganate
NaOH	sodium hydroxide
NMR	nuclear magnetic resonance
PD	phenyldichloroarsine
PMCD	Program Manager for Chemical Demilitarization
PMNSCM	Project Manager for Non-Stockpile Chemical Materiel
ppm	parts per million
PS	chloropicrin
RCMD	Recovered Chemical Materiel Directorate
RCRA	Resource Conservation and Recovery Act
RSA	Redstone Arsenal

SDS	Safety Data Sheet
TiO_2	titanium dioxide
v/v	volume to volume
vol.%	volume percent
wt	weight
wt.%	weight percent

(This page intentionally left blank.)

ATTACHMENT C-4
EDS TREATMENT CHEMISTRY

1. INTRODUCTION

The Recovered Chemical Materiel Directorate (RCMD), formerly known as the Project Manager for Non-Stockpile Chemical Materiel, developed the Explosive Destruction System (EDS) to treat/destroy explosively configured, recovered chemical munitions and other items of concern. The EDS was first tested at Porton Down, United Kingdom (1999), using military munitions and has since been deployed to various sites in the United States to treat recovered chemical filled munitions and other containers. The EDS is designed to safely treat/destroy (demilitarize) munitions and other items that contain or are contaminated with chemical agent and may or may not have energetic components.

The primary objective of treatment is to convert the chemical fill to less toxic products to minimize health and safety hazards associated with the handling and transportation of chemical materiel destined for further treatment and ultimate disposal. The demilitarization process also is termed “neutralization,” which has been defined by Army Regulation (AR) 50-6 as the act of altering chemical and physical properties to render a chemical agent ineffective for use as intended. The product of neutralization is termed “neutralent” and the term “neutralization reagent” is applied to the liquid treatment reagent that will react with the chemical-fill for detoxification.

The EDS will be used to destroy recovered munitions and other items at the Redstone Arsenal (RSA), Huntsville, Alabama. Potential chemical agents and industrial chemicals that may be processed during EDS operations at RSA include, but are not limited to, sulfur mustards (HD, HS, and mustard-T [HT]); nitrogen mustard (HN-3); lewisite (L); arsenical compounds (diphenylchloroarsine [DA] and phenyldichloroarsine [PD]) encountered individually or in mixtures with mustard agent or in any combination thereof; phosgene (CG); tear agents (chloroacetophenone [CN], carbon tetrachloride + chloroacetophenone + benzene [CNB], chloroacetophenone + chloropicrin + chloroform [CNS]); smokes sulfur trioxide + chlorosulfonic acid + lead tetroxide (FS smoke), titanium tetrachloride + lead tetroxide (FM smoke); and explosives tetryl and tetrytol contained in munition bursters.

This document describes the chemical properties of the chemical agents and industrial chemicals to be treated as well as identifies the selected treatment reagent and the reactions with the associated treatment reagent.

The treatment processes and procedures discussed in this attachment relate to the treatment/destruction of recovered munitions and other items and treatment levels established for the particular chemical fills of concern. Laboratory studies were conducted to develop treatment chemistry with the objectives to eliminate/minimize chemical agent characteristics and minimize any health hazards associated with handling and transportation for further waste treatment or disposal. A treatment reagent reacts with a chemical agent or industrial chemical to convert the chemical fill to less toxic products that are not classified as chemical warfare materiel (CWM). However, these products may still present certain hazards to personnel or the environment. The treatment reactions are discussed in detail in **Section 4**.

2. CHEMICAL AGENTS

The structural formulas and physical and chemical properties of chemical agents HS, HT, HN-3, and L are depicted in **Attachment C-1**.

2.1 Toxicity and Impurities

Munitions-grade fill material found in recovered munitions and other items may contain manufacturing byproducts and decomposition products that can range from a few to several percent depicted in the specific treatment reaction section for each compound. For the most part, only the major impurities, all of which are chemically similar to chemical agents, are discussed in this attachment. However, mustard chemical agents HS, HT, and HN-3 may contain the following toxicity characteristic metals as impurities: arsenic (D004), barium (D005), cadmium (D006), chromium (D007), lead (D008), mercury (D009), selenium (D010), and silver (D011). In addition, the following toxicity characteristic organics, benzene (D018), chloroform (D022), 1,2-dichloroethane (D028), hexachloroethane (D034), tetrachloroethylene (D039), trichloroethylene (D040), and vinyl chloride (D043), have been identified as impurities or degradation products of mustard agents.

3. TREATMENT (NEUTRALIZATION) REAGENTS AND SOLVENTS

Reagents and solvents selected for treatment are sodium hydroxide (NaOH), monoethanolamine (MEA), sodium permanganate ($NaMnO_4$), and propylene glycol in water or alcohol solution. The treatment reagents convert chemical agents and industrial chemicals to less toxic substances by reactions that proceed rapidly at moderate temperatures. In some of these processes, the solvent participates in the chemical reaction (see **Section 4**). Solvents ensure that the reagent and the products of the reactions are soluble. Because the EDS Containment Vessel is comprised of metal (stainless steel), the reagent

solutions were chosen not only to provide adequate treatment but also to avoid corrosion of the equipment. The properties of the reagents and solvents are shown in **Attachment C-1**.

4. TREATMENT REACTIONS

4.1 Sulfur Mustard Agents

- Levinstein Mustard 70 weight percent (wt.%) bis (2 chloroethyl) sulfide 30 wt.% higher molecular weight polysulfides (HD/HS)

- Mustard-T (HT) 60 wt.% H and 40 wt.% [2(2 chloroethylthio)ethyl] ether (T).

4.1.1 Neutralization of Mustard Agent (HD, HS, and HT).

4.1.1.1 Standard Procedure for Mustard Agents. Per the EDS Standing Operating Procedure (Ref. 4.1.2.1), the same treatment protocol is used for all sulfur mustard agents. The sulfur mustard treatment protocol calls for a 10:1 volume ratio of MEA reagent (90 percent MEA/10 percent H_2O) to agent for mustard fill volumes greater than or equal to 13 liters. The minimum reagent volume used in the EDS is 133 liters, so volumes of mustard less than 13 liters processed in the EDS will involve reagent to mustard volume ratios greater than 10:1. The MEA reagent and the EDS vessel are heated to 60°C (140°F) and agitated until the treatment goal has been reached, which may take up to 4 hours. After draining the neutralent, the vessel is rinsed with hot (100°C) water, which is effective at removing mustard agent vapors that may remain in the vessel. The hot water rinse is followed by an ambient water rinse before the vessel is opened.

From the Munitions Management Device, Version 1 (MMD-1) chemistry study on the reaction and temperature of H with MEA (Ref. 4.1.2.3), 3 moles of MEA per mole of H are required at stoichiometric quantities for the reaction shown in **Figure Attachment C-4-1**. With munitions-grade mustard containing [2(2-chloroethylthio)ethyl]ether (T), 4 moles of MEA are required at stoichiometric quantities. Water is not a significant reactant and does not enter into the stoichiometric reaction; water is added to increase the solvent properties of the MEA matrix. Six moles of MEA (a 10:1 volumetric ratio of MEA to H) is used in the EDS to ensure enough MEA is available to provide reactive destruction of munitions-grade H to an acceptable level within an acceptable period of time.

The calculation for determining how much MEA (molecular weight [mw] = 61.08, specific gravity = 1.016) is needed per pound of mustard (mw = 159.08) is shown by the following equation:

$$1 \text{ lb H} \times \frac{1 \text{ mol H}}{159.08 \text{ lb H}} \times \frac{6 \text{ mol MEA}}{\text{mol H}} \times \frac{61.08 \text{ lb MEA}}{\text{mol MEA}} = 2.30 \text{ lb MEA}$$

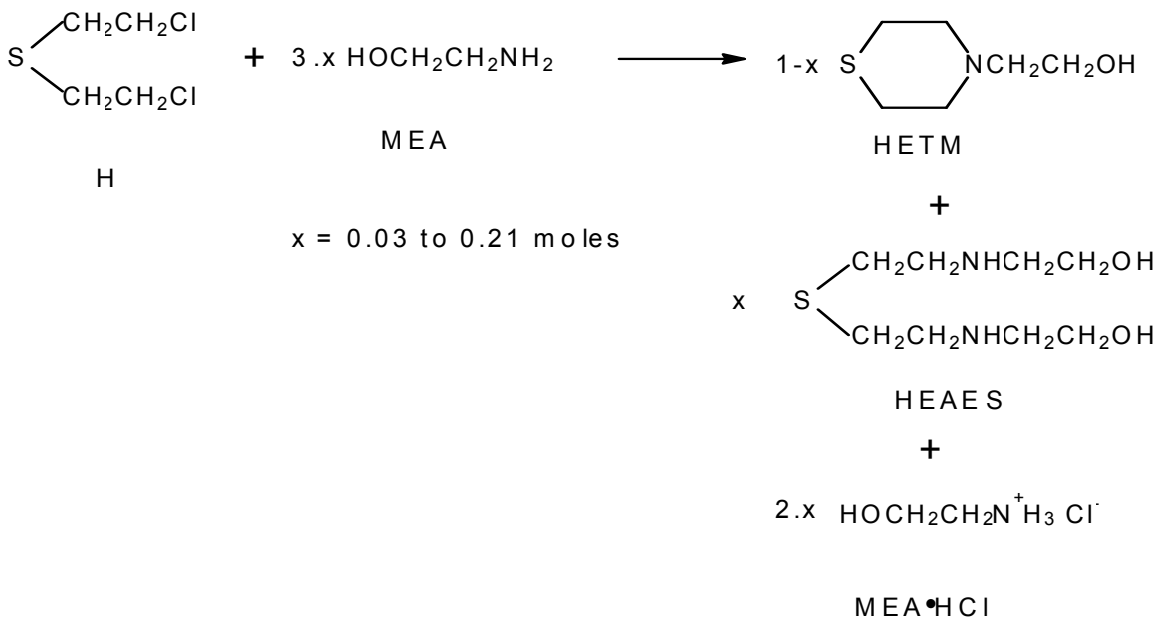

Figure Attachment C-4-1. Reaction of Sulfur Mustard with MEA

On a volumetric basis: 0.094 gallons (gal) of H, the volume of 1 pound (lb) of H, requires 0.94 gal of MEA reagent, a 10:1 volume to volume ratio of MEA reagent to H. A 10:1 volume ratio of MEA to H (a 6+ molar ratio) is specified for the reaction matrix as it ensures enough MEA is available to provide reactive destruction of munitions-grade H to an acceptable level within an acceptable period of time.

For example (a 4.2-inch mortar with 0.60 gal H):

$$0.60 \text{ gal H} \times \frac{10 \text{ gal 90\% MEA}}{\text{gal H}} = 6.0 \text{ gal (22.7 liters) 90\% MEA (by volume)}$$

In the presence of excess MEA reagent, the reaction proceeds at a moderate rate to form N-(2-hydroxyethyl)-thiomorpholine (HETM) as a major product; [bis[2-(2-hydroxyethyl-amino)ethyl] sulfide (HEAES) and MEA hydrochloride (MEA•HCl) also are formed, as shown in **Figure Attachment C-4-1**.

The H reacts with the reagent to form products that are not Chemical Weapons Convention Schedule chemicals and are all soluble in the neutralent. In this reaction, an excess of the reagent is used (Ref. 4.1.2.4).

4.1.2 Mustard Agent Treatment References.

4.1.2.1 U.S. Army Chemical Materials Activity (CMA), *Standing Operating Procedure for Explosive Destruction System Phase 2 Series Operations*, 2013a.

4.1.2.2 Sandia National Laboratories, *DRAFT Explosive Destruction System Phase II Report*, Section 4.7, April 1999.

4.1.2.3 Product Manager for Non-Stockpile Chemical Materiel, *Evaluation of the Chemistry Which Supports HD Neutralization in the MMD-1*, Volume I of III, September 1997.

4.1.2.4 Project Manager for Non-Stockpile Chemical Materiel, Spring Valley Formerly Used Defense Site, *Chemical Safety Submission Annex for Explosive Destruction System Operations Destruction Plan*, Final, Revision 3, Annex G, Attachment G-1, Section 4, March 2010.

4.1.2.5 U.S. Army Program Manager for Chemical Demilitarization (PMCD), *NaOH Treatment of Chemical Warfare Materiel Literature Review Letter Report*, Section 2.1, May 2000.

4.2 Nitrogen Mustard Agent

- 2,2',2"-trichloroethylamine (HN-3).

4.2.1 Neutralization of HN-3.

4.2.1.1 Standard Procedure for Nitrogen Mustard. The nitrogen mustard treatment protocol calls for a 10:1 volume ratio of MEA reagent (90 percent MEA and 10 percent H_2O) to agent for HN-3 fills greater

than or equal to 13 liters (Ref. 4.2.2.1). The minimum reagent volume used in the Phase 2 EDS is 133 liters, so when volumes of HN-3 less than 13 liters are processed in the EDS, the reagent to agent volume ratio will be greater than 10:1. A 10:1 volume ratio of MEA to HN-3 (a 5 molar ratio) is specified for the reaction matrix as it approximates the minimum ratio necessary to ensure destruction of HN-3 to acceptable levels within a desired time period. After adding the MEA reagent, the vessel is heated to 140°F (60°C) and agitated until the treatment level has been reached, which may take up to 4 hours. After draining, the vessel is rinsed with 100°C water followed by an ambient water rinse (Ref. 4.2.2.1).

MMD-1 test chemistry (Ref. 4.2.2.3) indicated that because MEA contains both $-NH_2$ and -OH moieties, it is possible for either reactive group on the MEA to interact with the C-Cl bonds in HN-3. Which reaction would have precedence would depend on the concentrations of the reactants, the temperature, and the degree of mixing. Furthermore, because there are three chloroethyl groups in HN-3, MEA may react with one, two, or all three of the C-Cl bonds if there is a sufficient amount of MEA and sufficient time for all of the reactions to take place. The excess MEA called for in the EDS recipe favors removal of all three C-Cl bonds in the HN-3 being treated. Regardless of whether the $-NH_2$ and -OH moiety breaks the C-Cl bond in HN-3, the HCl that is generated will be bound on the available organo-nitrogen centers as a ammonium salt.

From the reaction study of HN-3 with MEA, 5 moles of MEA per mole of HN-3 are required at stoichiometric quantities for the reaction shown in **Figure Attachment C-4-2** (Ref. 4.2.2.1). Because HN-3 is slow to hydrolyze in water, it is believed that water is not a significant reactant and does not enter into the stoichiometric reaction. Ruth et al. (Ref. 4.2.2.4) characterized the reaction products of neutralization of HN-3 by MEA and determined that the primary reaction product was 4-[2-[(2-hydroxyethyl)amino]ethyl]-1-piperazine ethanol (**Figure Attachment C-4-2**) along with ethanolamine hydrochloride. The equation in **Figure Attachment C-4-2** shows that all three of the C-Cl bonds in HN-3 have been removed. The figure also shows that the HCl produced by the reaction has formed an ammonium salt with the excess MEA. It is noted, that the referenced study (Ref. 4.2.2.4) did not characterize all of the non-volatile products in the neutralent. Non-volatile degradates other than the MEA•HCl shown in **Figure Attachment C-4-2** would almost certainly include a significant amount of nitrogen-containing products generated in this reaction.

$$N(CH_2CH_2Cl)_3 + 5\ H_2NCH_2CH_2OH \xrightarrow{MEA_{excess}} HOCH_2CH_2NHCH_2CH_2N(CH_2CH_2)_2NCH_2CH_2OH + 3\ HOCH_2CH_2NH_2{\cdot}HCI$$

Figure Attachment C-4-2. Nitrogen Mustard Reaction with Excess MEA

The following equation calculates the amount of MEA required to treat 1 lb of HN3 based on the 5:1 molar ratio. Per pound of nitrogen mustard (mw = 204.53) using MEA (mw = 61.08, sg = 1.016):

$$1 \text{ lb HN} \times \frac{1 \text{ mol H}}{204.53 \text{ lb HN}} \times \frac{5 \text{ mol MEA}}{\text{mol HN}} \times \frac{61.08 \text{ lb MEA}}{\text{mol MEA}} = 1.49 \text{ lb MEA}$$

On a volumetric basis: 0.096 gal of HN, the volume of 1 lb of HN, requires 0.175 gal MEA and 0.02 gal water, a 2:1 volume to volume (v:v) ratio of MEA to H. However, a 10:1 volume ratio of MEA to HN (a 5 molar ratio) is specified for the reaction matrix as it ensures enough MEA is available to provide reactive destruction of munitions-grade nitrogen mustard. The 10:1 volume ratio also provides a significant heat sink to govern the temperature profile of the reaction.

4.2.2 HN-3 Treatment References.

4.2.2.1 U.S. Army Chemical Materials Activity (CMA), *Standing Operating Procedure for Explosive Destruction System Phase 2 Series Operations*, 2013a.

4.2.2.2 U.S. Army Program Manager for Chemical Demilitarization (PMCD), *Test Chemistry and Analytical Method Precision and Accuracy Study Report for Nitrogen Mustard (HN-1 and HN-3)*, Final, Vol. 1, April 2000.

4.2.2.3 PMCD, *Evaluation Report for Laboratory Scale Testing Neutralization of DF and QL Binary Chemicals Non-Stockpile Chemical Materiel Program Report 000011*, October 2002.

4.2.2.4 Ruth, J. L., R. L. Cheicante, W. R. Creasy, A. M. Schenning, P. B. Smith, K. M. Morrissey, and H. D. Durst, Chemical Characterization of Neutralent and Rinse Samples Generated during EDS Campaign to Neutralize HN-3, 30 May 2006.

4.3 Lewisite (L)

4.3.1 Neutralization of Lewisite.

4.3.1.1 Lewisite Standard Treatment. The protocol for lewisite chemical treatment calls for the addition of 20 wt.% $NaMnO_4$ reagent at ambient temperature. After adding the $NaMnO_4$ reagent, agitation should begin and the vessel heated to 140°F (60°C). The vessel should be agitated until the treatment level is

reached, which may take up to 6 hours, and then drained. Draining of the vessel is followed by a water rinse and repeated as necessary (Ref. 4.3.2.1).

The chemical treatment of lewisite with excess aqueous permanganate solution results in the destruction of lewisite (less than 0.1 wt.%) through the oxidation of arsenic (III) to the primarily inorganic arsenic (V) and the reduction of the permanganate ion to manganese. The highly reactive manganese intermediate leads to the formation of carbon dioxide from the vinyl carbon. The reaction under neutral conditions and ideal stoichiometry is shown as follows:

$$2MnO_4^- + 3As[(C_2H_2CI)(CI_2)] + 20H_2O \rightarrow 2MnO_2 + 3AsO_4^{-3} + 6CO_2 + 9CI^- + 46H^+$$

Lewisite variants found in munition-grade lewisite (L1, L2, and L3) undergo reactions similarly with the formation of identical final reaction products through the oxidative and hydrolytic processes. The relative amounts of the three lewisite variants likely vary by munition; however, the large excess volume ratio of reagent to agent used for EDS lewisite destruction results in oxidant excesses that significantly exceed the stoichiometric requirement. In the extreme case that the munition only contains the L3 variant, the ideal reaction stoichiometry required for complete oxidation of the L3 is shown as follows:

$$2MnO_4^- + 3As(C_2H_2CI)_3 + 44H_2O \rightarrow 2MnO_2 + 3AsO_4^{-3} + 18CO_2 + 9CI^- + 106H^+$$

At a 20:1 volume ratio of aqueous permanganate to lewisite, the resulting actual reactant molar ratios are shown in the following equation:

$$3MnO^{4-} + As[(C_2H_2CI)(CI_2)] + 99H_2O \rightarrow MnO_2 + AsO_4^{-3} + CO_2 + CI^- + H_2O + \text{Other}$$

The above reaction illustrates a four-fold stoichiometric molar excess of oxidant to lewisite. The 50:1 permanganate to lewisite volume ratio used during EDS lewisite destruction operations provides even greater excess oxidant that is dependent on the amount of lewisite fill in the munition being destroyed (Ref. 4.3.2.2).

Per pound of lewisite (mw = 207.32):

$$1 \text{ lb L} \times \frac{1 \text{ mol L}}{207.32 \text{ lb L}} \times \frac{2 \text{ mol } NaMnO_4}{3 \text{ mol L}} \times \frac{141.94 \text{ lb } NaMnO_4}{\text{mol } NaMnO_4} = 0.46 \text{ lb } NaMnO_4$$

20 percent $NaMnO_4$ (by weight) contains approximately 236 g $NaMnO_4$ per liter of solution:

$$0.46 \text{ lb } NaMnO_4 \times \frac{453.6 \text{ g}}{\text{lb}} \times \frac{1 \text{ liter}}{236 \text{ g } NaMnO_4} = 0.88 \text{ liters (0.23 gal) 20\% } NaMnO_4$$

EDS tests were performed with a number of lewisite-filled munitions and Department of Transportation cylinders. The resulting neutralent from the reaction of the fill with 20 percent $NaMnO_4$ reagent had analytical results that were less than 50 parts per million (ppm) for lewisite (aggregate of L1, L2, and L3). **Table Attachment C-4-1** lists the analytical results from the process samples taken during chemical treatment. All rinsewater samples were less than 50 ppm for lewisite. **Table Attachment C-4-2** lists the results of the two headspace vapor samples that were collected.

The solid substance that coated the interior of the EDS Containment Vessel had the consistency of brownie dough and could be scraped out of the vessel with a Teflon® scraper shaped to fit the vessel. A sample was analyzed and identified to be mainly MnO_2. Anion analysis indicated the presence of chloride, sulfate, chlorovinylarsenic acid (CVAOA), arsenate (As+5), and possibly a trace of bis(2-chlorovinyl)arsenic acid (BCVAOA) and bis(2-chlorovinyl)arsinous acid (BCVAA). Arsenite (As+3) and 2-chlorovinylarsenous acid (CVAA) were not detected by micellar electrokinetic chromatography.

Samples collected from the processing of munitions DPG-94-055 and DPG-94-028 were also subjected to analysis for reaction products and metals in the filtered liquid (neutralent and rinsewater) and in the isolated solids. Results are listed in **Table Attachment C-4-3** (Ref. 4.3.2.1).

4.3.2 Lewisite Treatment References.

4.3.2.1 Project Manager for Non-Stockpile Chemical Materiel (PMNSCM), *Explosive Destruction System Phase 1 Unit 2 Series Test Report for Lewisite*, Section 1.3.4, July 2005.

4.3.2.2 PMNSCM, *Spring Valley Formerly Used Defense Site, Chemical Safety Submission Annex for Explosive Destruction System Operations Destruction Plan*, Final, Revision 3, Annex G, Attachment G-1, Section 5, March 2010.

Table Attachment C-4-1. Process Sample Analytical Results

ID	Analyte	Analytical Results (ppm)					
		1-hour	2-hour	3-hour	4-hour	6-hour	Next Day
L-DOT(P1)-01	L1	18	29	-	15	7, 6	1.6
	L2	6.5	11	-	6.2	2.8, 2.7	0.90
	L3	0.44	0.81	-	0.84	0.54, 0.54	ND
L-DOT(P1)-02	L1	-	-	470	-	220	14
	L2	-	-	460	-	210	12
	L3	-	-	20	-	18	2
L-DOT(P1)-03	L1	-	-	-	-	13	9
	L2	-	-	-	-	16	8
	L3	-	-	-	-	4	4
L-DOT(P1)-04	L1	-	-	-	-	140	31; 8[a]
	L2	-	-	-	-	110	17; 6[a]
	L3	-	-	-	-	30	4; ND[a]
DPG-94-055	L1	-	-	87	-	28	11
	L2	-	-	160	-	50	9
	L3	-	-	4.3	-	6.4	0.4
DPG-94-028	L1	-	-	9.5	-	20	3.0
	L2	-	-	30	-	38	0.2
	L3	-	-	2.8	-	4.5	ND

Notes:

[a] The second set of analytical results were from an additional next day sample.

DOT = Department of Transportation
DPG = Dugway Proving Ground
ID = identification
ND = non-detect
ppm = parts per million

Source: Reference 4.3.2.1

Table Attachment C-4-2. Headspace Vapor Results

Analyte	L-DOT(P1)-01	L-DOT(P1)-02
Carbon Dioxide	--	7.3 vol.%
Hydrogen	<0.5%	--
Nitrogen	23%	10.5 vol.%
Oxygen	4%	61.6 vol.%
Helium	68%	20.6 vol.%

Notes:

DOT = Department of Transportation
vol.% = volume percent

Table Attachment C-4-3. Reaction Product/Metals Analyses for Samples from DPG-94-055 and DPG-94-028

	Concentration in Sample (mg/kg)[a]					
	DPG-94-055			DPG-94-028		
	21-hour[b]	Rinse[b]	Residue[c]	21-hour[b]	Rinse[b]	Residue[c]
Reaction Products						
Arsenate ($HAsO_4^{-2}$)	920	1,930	9,075	1,905	2,875	9,295
Chloride (Cl^{-1})	5,900	420	530	10,700	1,011	316
Fluoride (F^{-1})	282	205	178	315	118	163
Sulfate (SO_4^{-2})	310	Trace	Trace	391	Trace	Trace
CVAOA	ND	507	5,370	ND	914	3,595
BCVAA	ND	ND	371	ND	ND	ND
BCVAOA	ND	2,410	11,280	ND	1,750	5,995
Acetate ($C_2H_3O_2^{-1}$)	Trace	ND	Trace	164	ND	Trace
Formate (CHO_2^{-1})	Trace	Trace	73	Trace	67	Trace
Oxalate ($C_2O_4^{-2}$)	Trace	ND	ND	188	ND	ND
Metals						
Arsenic	12,400	14,500	76,200	20,800	20,600	54,700
Copper	2,680	3,650	31,000	2,020	2,535	9,450
Iron	5,760	12,700	82,600	8,950	16,900	49,000
Manganese	93,800	49,000	255,000	109,500	106,650	288,000
Sodium	32,000	5,220	24,400	35,900	17,210	43,700
Mercury	3.3	1.9	18.5	41.3	24.8	92.0

Notes:

[a] Arsenite (AsO_2^{-1}), CVAA, fumarate ($C_4H_2O_4^{-2}$), succinate ($C_4H_4O_4^{-2}$), and sulfur were not detected in any of the samples. Nitrate (NO_3^{-1}) and glycolate ($C_2H_3O_3^{-1}$) were detected in some samples, but not at levels above the detection limit.

Table Attachment C-4-3. Reaction Product/Metals Analyses for Samples from DPG-94-055 and DPG-94-028 (Continued)

Notes: (Continued)

[b] Results for the 21-hour samples and the rinse samples were for the filtrate after extraction with 0.1 weight percent (wt.%) sodium hydroxide.

[c] Results for the residue samples were for the isolated solids after extraction with 0.1 wt.% sodium hydroxide and sonication for 3 hours.

BCVAA	=	bis(2-chlorovinyl)arsinous acid
BCVAOA	=	bis(2-chlorovinyl)arsenic acid
CVAOA	=	chlorovinylarsenic acid
DPG	=	Dugway Proving Ground
mg/kg	=	milligram per kilogram
ND	=	non-detect

Source: Reference 4.3.2.1

4.4 Phosgene (CG)

4.4.1 CG Standard Treatment. The chemical treatment protocol for CG is the addition of 20 percent aqueous NaOH solution. The boiling point of CG is 8°C, therefore, once the munition has been opened, a considerable amount of CG will be present in the gas phase (Ref. 4.4.2.2). The reaction of CG with NaOH is spontaneous and very rapid, but is limited by the low solubility of gaseous CG in the liquid phase (Ref. 4.4.2.3). Agitation is necessary for the treatment process and should be done for a minimum of 1 hour. Spraying the reagent as a fine mist also speeds the treatment process. Although heating is not required, heating decreases the solubility of the gas in the reagent, but increases the concentration of water vapor in the vessel atmosphere, thus accelerating decomposition. For CG, an 8x mass ratio of NaOH should be used (which, per pound of CG, equates to 14.9 liters of 20 percent aqueous NaOH (by weight); 9.1 liters of 30 percent; 6.3 liters of 40 percent; or 4.8 liters of 50 percent) (Ref. 4.4.2.3).

The reaction between CG and NaOH produces nontoxic sodium carbonate (Na_2CO_3), sodium chloride (NaCl), and water. The reaction takes place as follows (please note that the following equation ignores the reaction that CG can have with water) (Ref. 4.4.2.1):

$$COCI_2 + 4NaOH \rightarrow Na_2CO_3 + 2NaCI + 2H_2O$$

Each mole of CG consumes four moles of NaOH as the CG is converted to Na_2CO_3, NaCl, and water (Ref. 4.4.2.3).

Per pound of CG (mw = 98.92):

$$1 \text{ lb CG} \times \frac{1 \text{ mol CG}}{98.92 \text{ lb CG}} \times \frac{4 \text{ mol NaOH}}{\text{mol CG}} \times \frac{40 \text{ lb NaOH}}{\text{mol NaOH}} = 1.62 \text{ lb NaO}$$

Using a 20 percent NaOH (by weight) solution:

$$1.62 \text{ lb NaOH} \times \frac{453.6 \text{ g}}{\text{lb}} \times \frac{1 \text{ liter}}{243.8 \text{ g NaOH}} = 3.0 \text{ liters (0.79 gal) 20\% NaOH (by wt)}$$

Therefore, a minimum of 3 liters of 20 percent NaOH is required per pound of CG. However, it is desirable to have an excess of NaOH because if the supply of NaOH is limited, other reactions will occur, as follows:

$$\begin{aligned} COCl_2 + 2OH^-_{aq} &\rightarrow CO_2 + 2HCl \\ &\rightarrow HCO_3^- + 2Cl^- \\ &\rightarrow CO_3^{-2} + 2Cl^- \end{aligned}$$

To ensure an excess of NaOH, the EDS recipe calls for 15 liters of 20 percent NaOH per liter of CG. A liter of CG contains 3.09 pounds of CG. Therefore, a 15 to 1 volume ratio equates to 4.9 liters of 20 percent NaOH per pound of CG, a 63 percent excess.

Diphosgene (DP) (a chemical agent similar to CG although not a dimer of phosgene) is readily decomposed by aqueous NaOH and the same mass ratio should be used for DP, as DP can convert to CG upon storage (4.4.2.4). The reaction of DP with NaOH is as follows (Ref. 4.4.2.2):

$$ClCOOCCl_3 + 8NaOH \rightarrow 4NaCl + 2Na_2CO_3 + 4H_2O$$

Per pound of DP (mw = 197.8):

$$1 \text{ lb DP} \times \frac{1 \text{ mol DP}}{197.8 \text{ lb DP}} \times \frac{8 \text{ mol NaOH}}{\text{mol DP}} \times \frac{40 \text{ lb NaOH}}{\text{mol NaOH}} = 1.62 \text{ lb NaOH}$$

Using a 20 percent NaOH (by weight) solution:

$$1.62 \text{ lb NaOH} \times \frac{453.6 \text{ g}}{\text{lb}} \times \frac{1 \text{ liter}}{243.8 \text{ g NaOH}} = 3.0 \text{ liters (0.79 gal) 20\% NaOH (by wt)}$$

4.4.2 Phosgene Treatment References.

4.4.2.1 U.S. Army Program Manager for Chemical Demilitarization (PMCD), MMD-1, RD&D Permit, Attachment 4, Appendix 4B, Test Chemistry, September 1999.

4.4.2.2 PMCD, *NaOH Treatment of Chemical Warfare Materiel Literature Review Letter Report*, Sections 2.6.1 and 2.6.7, May 2000.

4.4.2.3 Sandia National Laboratories, *Explosive Destruction System (EDS): Proof of Concept*, Section 5.2.3, December 2006.

4.4.2.4 Department of the Army, Field Manual (FM) 3-9, Potential Military Chemical/Biological Agents and Compounds, 1990.

4.5 Arsenicals

- German Tractor Rocket (GTR) Arsenical Mixtures containing DA and PD
- Arsenical and Mustard Mixtures.

4.5.1 Treatments for Arsenical Mixtures Containing DA and PD. The GTR mix consists of phenyldichloroarsine (PD) and diphenylchloroarsine (DA) and is sometimes referred to as DA Arsinol or Blue Ring 2 (BR2). The selected neutralization reagent, aqueous 20 wt.% $NaMnO_4$, is effective in destroying the arsenical fills in GTRs under relatively mild reaction temperatures and short reaction times. In both lab-scale and full-scale EDS testing, the aqueous permanganate consistently produced neutralents that had residual agent levels below the treatment goal of 50 milligrams per liter (mg/L). The reaction products included inorganic pentavalent arsenate and various pentavalent organoarsenicals, with inorganic arsenate concentration positively correlated with reaction temperature. Solid manganese dioxide is also produced during the reaction, and has been successfully managed in the full-scale EDS testing. The selected neutralization reagent, aqueous 20 percent $NaMnO_4$, is non-flammable, relatively non-toxic, compatible with standard reactor materials of construction, and commercially available in bulk. Aqueous 20 percent $NaMnO_4$, is stable and has an estimated shelf-life of 18 months. The aqueous 20 percent $NaMnO_4$ maintains effectiveness in the presence of explosive residues and large amounts of copper and iron (Ref. 4.5.4.1).

Small-scale (100 milliliter [mL]) reactions were well behaved, with no significant off-gassing observed when the arsinol mixture (BR2) was added to the 20 wt.% $NaMnO_4$ reagent. There was a slight exotherm when the BR2 was added, with a maximum rise of 5° to 6°C observed during the reactions. During the first hour of reaction, a crust developed on top of the neutralent, but this crust was mostly dissolved by the second hour of reaction (Ref. 4.5.4.2). The terminal pH values ranged from 7.59 to 9.62 compared to a starting pH of 7.82 for the 20 wt.% $NaMnO_4$ reagent.

The reactor run examining the capacity of the 20 wt.% $NaMnO_4$ reagent was well behaved, with no vigorous off-gassing or foaming taking place during the additions of BR2. There was a slight exotherm

after each addition, with the magnitude of the exotherm decreasing with each addition of BR2. The largest exotherm was approximately 5°C, and occurred after the second addition of BR2. The cycle of sampling, then adding additional BR2 continued for a total addition of 11 mL of BR2. This amount corresponds to a BR2 to reagent loading of 1:9, based on 100 mL of reagent. The development of the crust on top of the neutralent was more pronounced, but it mostly dissolved within 1 hour after the last addition of BR2. The pH of the terminal neutralent was 7.22. The terminal neutralent was a dark purple color (the color of permanganate), suggesting the oxidative capacity of the reagent had not been exhausted.

Time-point samples were removed from the reactor and analyzed for residual DA and PD. The results are summarized in **Table Attachment C-4-4**. The reaction of DA and PD with 20 wt.% $NaMnO_4$ proceeds very quickly and appears to be independent of reaction temperature, BR2 loading, and GTR fill used. Using the average 2-hour results for each BR2 loading, the first order half-lives for DA and PD were calculated to be 8 minutes.

The 20 wt.% $NaMnO_4$ reagent was very effective at destroying the agents, with average (across all reaction time/temperatures/loadings) destruction efficiencies calculated to be 99.988 percent for DA and 99.990 percent for PD. No agents were detected in any of the air samples at an estimated detection limit of 0.0015 milligram (mg) of agent.

Table Attachment C-4-4. Residual DA and PD in Whole Neutralent Time Point Samples

Test Item	Residual in Neutralent (mg/L) by Reaction Time[a]					
	2 Hours		4 Hours		6 Hours	
	DA	PD	DA	PD	DA	PD
CA-230	ND	ND	ND	ND	ND	ND
CA-175	Trace	Trace	Trace	ND	Trace	ND
CA-178	Trace	ND	Trace	ND	Trace	ND
CA-230	Trace	ND	Trace	ND	Trace	ND
CA-276	Trace	ND	Trace	ND	Trace	ND
CA-280	Trace	ND	Trace	ND	Trace	ND

Notes:

[a] Reported values are averages of duplicate determinations.

ND = No peak was detected; estimated detection limit is 0.05 mg/L.
Trace = Peak was detected, but was less than 0.1 mg/L.

Force to fail testing (Ref. 4.5.4.2) demonstrated that after 2 hours of reaction time, the 50 mg/L treatment goal for each of the agents was met at agent to reagent concentrations far in excess of the 1:50 ratio used in the EDS:

- DA: The treatment goal was met up to a volumetric loading of 1:14.
- PD: The treatment goal was met up to a volumetric loading of 1:9.

The neutralent samples were analyzed for reaction products using capillary electrophoresis methods applied to the filtered neutralent and the results are summarized in **Table Attachment C-4-5**.

Solids contained in neutralent samples were also characterized (Ref. 4.5.4.2). Total metals from isolated solids and filtrate for the reactor run at 60°C and a feed rate of 1:50 were as follows:

- *Metal from Isolated Solids:*
  - As 81,400 milligrams per kilogram (mg/kg)
  - Fe 1,900 mg/kg
  - Mn 268,000 mg/kg.
- *Metal from Filtrate:*
  - As 670 mg/kg
  - Fe ND mg/kg
  - Mn 58,600 mg/kg.

Residual agent recovered from the isolate solids were:

- *Concentration:*
  - DA 61.9 mg/kg
  - PD 6.61 mg/kg.

Table Attachment C-4-6 shows the results for analysis of solids recovered from testing at 60°C with an agent to reagent loading of 1:50.

A series of large-scale (500 and 1,000 mL) reactions were conducted to generate samples for a neutralent storage study, Resource Conservation and Recovery Act (RCRA) waste characterization, and material compatibility testing. These reactions were all conducted at a BR2 to reagent loading of 1:50, at reaction

Table Attachment C-4-5. Summary of Analytical Results for the 1:50 Loading Performed at 60°C

	Concentration in Neutralent[a] (mg/L)		
Target Analyte	2 Hours	4 Hours	6 Hours
Arsenite (AsO_2^-)	ND (330)	ND (330)	ND (330)
Arsenate ($HAsO_4^{-2}$)	ND (160)	ND (160)	ND (160)
Chloride (Cl^-)	4,760	5,460	5,800
Fluoride (F^-)	253	225	254
Nitrate (NO_3^-)	ND (490)	ND (490)	ND (490)
Sulfate (SO_4^{-2})	Trace	Trace	Trace
Phenylarsonic Acid ($C_6H_5AsO_3^{-2}$)	ND (50.0)	ND (50.0)	ND (50.0)
Diphenylarsinic acid ($C_{12}H_{10}AsO_2^-$)	ND (50.0)	ND (50.0)	ND (50.0)
Phenylarsine Oxide (C_6H_5AsO)	ND (100.0)	ND (100.0)	ND (100.0)
Triphenylarsine Oxide ($C_{18}H_{15}AsO$)	ND (50.0)	ND (50.0)	ND (50.0)
Acetate ($C_2H_3O_2^-$)	ND (160)	ND (160)	ND (160)
Formate (CHO_2^-)	Trace	Trace	Trace
Fumarate ($C_4H_2O_4^{-2}$)	ND (200)	ND (200)	ND (200)
Glycolate ($C_2H_3O_3^-$)	ND (200)	ND (200)	ND (200)
Oxalate ($C_2O_4^{-2}$)	386	Trace	427
Succinate ($C_4H_4O_4^{-2}$)	ND (200)	ND (200)	ND (200)

Notes:

[a] All data reported in the original neutralent. The values in parentheses are the estimated reporting limits.

mg/L = milligram per liter
ND = No peak was detected.
Trace = A peak was detected, but was less than the reporting limit.

Table Attachment C-4-6. Summary of Analytical Results for the Solids Isolated from the 1:50 Loading at 60°C

Target Analyte	Concentration in Solids (mg/kg)
Arsenite (AsO_2^-)	ND (625)
Arsenate ($HAsO_4^{-2}$)	Trace
Chloride (Cl^-)	Trace
Fluoride (F^-)	284
Nitrate (NO_3^-)	ND (1,960)
Sulfate (SO_4^{-2})	ND (1,760)
Phenylarsonic Acid ($C_6H_5AsO_3^{-2}$)	16,400
Diphenylarsinic acid ($C_{12}H_{10}AsO_2^-$)	64,700
Phenylarsine Oxide (C_6H_5AsO)	552
Triphenylarsine Oxide ($C_{18}H_{15}AsO$)	2,080
Acetate ($C_2H_3O_2^-$)	ND (625)
Formate (CHO_2^-)	ND (586)
Fumarate ($C_4H_2O_4^{-2}$)	ND (782)
Glycolate ($C_2H_3O_3^-$)	9,400
Oxalate ($C_2O_4^{-2}$)	ND (1,490)
Succinate ($C_4H_4O_4^{-2}$)	ND (782)

Notes:

The results are corrected for background of any analytes detected in the extraction blank.

mg/kg = milligram per kilogram
ND = No peak was detected.
Trace = A peak was detected, but was less than the reporting limit.

temperatures of 60° and 80°C. These reactions were conducted using a composite feedstock of BR2 from all the GTRs.

The reaction of DA and PD with 20 wt.% $NaMnO_4$ proceeds very quickly and appears to be independent of temperature. The residual agent results obtained during these large-scale runs correlates well with data obtained during the small-scale reactions.

The reaction appears to approximate first-order kinetics, and half-life estimates were calculated. The half-life for DA at 60°C was calculated to be 0.38 hour. The half-life for PD at 60°C was calculated to be

0.55 hour. The half-lives calculated for the small-scale reactions ranged from 0.13 to 0.18 hour. The difference in half-lives is most likely due to the differences in loading the BR2. In the small-scale reactions, the BR2 was added to the reagent, while in the large-scale reactions, the reagent was added to the BR2. The somewhat longer half-lives calculated for the large-scale reactions appears to be related to mixing, with the BR2 in the small-scale reactions being more quickly dispersed, due to how the BR2 was loaded (Ref. 4.5.4.2).

Based on results of the laboratory-scale testing, full-scale testing was performed in the EDS. The concentration of DA and PD in neutralent from full-scale testing is shown in **Table Attachment C-4-7** (Ref. 4.5.4.2). After 1 hour reaction time, the concentration of each agent is below the treatment goal of 50 mg/L.

Table Attachment C-4-7. Residual Agents in Neutralent Samples from Full-Scale Testing

	Concentration (mg/L)		
Agent	After 1 Hour[a]	After 3 Hours[b]	After 4 Hours[b]
DA	<0.320	0.251	0.241
PD	<0.831	0.959	0.998

Notes:

[a] Average of 4 trials
[b] Average of 3 trials

mg/L = milligram per liter

The selected neutralization reagent, aqueous 20 wt.% $NaMnO_4$, was found to be effective in destroying the arsenical fills found in GTRs under relatively mild reaction temperatures and short reaction times. In both laboratory-scale and full-scale EDS testing, the aqueous permanganate consistently produced neutralents that had residual agent levels below the treatment goal of 50 mg/L (ppm). The reaction products included inorganic pentavalent arsenate and various pentavalent organoarsenicals, with inorganic arsenate concentration positively correlated with reaction temperature. Solid manganese dioxide was also produced during the reaction, and was successfully managed in the full-scale EDS testing (Ref. 4.5.4.2).

4.5.2 Treatment for Mustard and Arsenical Mixtures. The EDS recipe for treating sulfur mustard (HS) mixed with one or more arsenicals such as DA or PD will be treated with 20% NaMnO4. The permanganate reagent is used rather than the MEA reagent typically used for HS because permanganate treats the DA and PD and will also oxidize the HS. The treatment ratio is 50 parts reagent per part chemical agent by liquid volume. The EDS vessel is heated to 60°C during agitation and is rinsed twice with ambient temperature water after the neutralent has been drained.

4.5.3 Arsenical Treatment References.

4.5.3.1 Project Manager for Non-Stockpile Chemical Materiel, *Explosive Destruction System Phase 1 Unit 2 Series Test Report for Lewisite*, Section 1.3.4, July 2005.

4.5.3.2 Morrissey, et al., *Characterization and Neutralization of Arsenical-based WWII Era Chemical Munition Fills*, Edgewood Chemical Biological Center, 2006.

4.6 Chloroacetophenone (CN), CNB, and CNS

- Chloroacetophenone (CN)
- Carbon Tetrachloride + Chloroacetophenone + Benzene (CNB)
- Chloroacetophenone + Chloropicrin (PS) + Chloroform (CNS).

4.6.1 Treatment of CN. Chemical fill CN, a riot-control tear gas agent, is a white crystalline solid resembling ordinary granulated sugar or salt. Since CN is made of solid particles, it must be carried through the air by an agent or expelled in a fine dust generally by grenade. The recommended treatment for CN is currently 95 volume percent (vol.%) denatured alcohol (refer to Section 4.6.3; *Historical Treatments*) with no heating required. After agitating the reagent/CN mixture for at least one hour the mixture would be drained and the vessel rinsed twice with ambient water.

4.6.2 Standard Treatment of CNB and CNS. The chemical treatment protocol for treating both CNS and CNB is 1 part 20 percent aqueous NaOH and 1 part propylene glycol (1,2-propanediol). CN, contained in both CNS and CNB, is essentially insoluble in water, and is not readily hydrolyzed. CN is soluble in chloroform, PS, and other organic solvents; in carbon disulfide, ether, and benzene (Ref. 4.6.3.1); and in alcohol. CN may decompose upon exposure to air or water, and is incompatible with bases, amines, and alcohols. PS is insoluble in water, but is soluble in organic solvents such as

ethanol and chloroform (Ref. 4.6.3.1). PS can be reacted with either alcoholic NaOH or MEA. The reaction with alcoholic NaOH is as follows (Ref. 4.6.3.2):

$$CCI_3NO_2 + 5NaOH \rightarrow 3NaCI + NaNO_2 + NaHCO_3 + 2H_2O$$

A treatability study evaluated the efficacy of a reagent system for both CNS and CNB. The reagent tested was a 1:1 (v:v) mixture of 20 wt.% NaOH and propylene glycol. Propylene glycol was chosen for the reagent because it is readily available in bulk, relatively non toxic, has a high flashpoint, and has a low volatility. Also, propylene glycol has been used in decontamination formulations to solubilize organics. The reaction of CNS and CNB with the NaOH/propylene glycol reagent was studied on a small scale level using 2.5 mL of CNS or CNB and 100 mL of reagent (Ref. 4.6.3.3).

The CNS reaction was well-behaved, with no observed bumping or splattering when the CNS was added to the reagent. There was a mild exotherm, with the temperature rising less than 2°C after the CNS was added. A second layer was visible on the bottom of the reactor; this lower layer became dissolved/dispersed within 60 minutes of the CNS being added to the reagent. After 15 minutes, samples had no detections of CN or PS (at a detection limit of 1 mg/L). The samples were not analyzed for reaction products. The neutralent was also cloudy with visible solids and tan/orange in color. After 24 hours of settling, the neutralent was still cloudy, although most of the solids had settled.

The solids were recovered by vacuum filtration; the dried recovered solids were free flowing and not sticky. After nuclear magnetic resonance (NMR) and Fourier transformed infra-red (FTIR) analysis, the solids were determined to be predominantly 1,2-propanediol and an unidentified aromatic polymer.

The CNB reaction was well-behaved, with no observed bumping or splattering when the CNB was added to the reagent. There was a mild exotherm, with the temperature rising less than 1°C after the CNB was added. Initially, a second layer was visible on the bottom of the reactor; this lower layer became dissolved/dispersed within 60 minutes of the CNB being added to the reagent. Samples removed from the reactor had no detections of CN or dichloroacetophenone (DAP). The samples were not analyzed for reaction products.

The neutralent was homogeneous, with the exception of a small gelatinous globule, cloudy, and tan/orange in color. This globule was determined to be comprised of benzene and 1,3-propanediol. After settling for 24 hours, a small amount of an oily layer formed on the neutralent surface (not analyzed). No precipitates formed, and the solids tended to remain suspended in the neutralent (Ref. 4.6.3.3).

The reaction of CNS and CNB with a 20 percent aqueous NaOH/propylene glycol solution as an effective neutralization method was further substantiated by recent CNB and CNS recovered CWM treatability tests conducted in May and June 2011 (Ref. 4.6.3.4). The test involved 10 CNB- and 4 CNS-filled munitions in various shot configurations. In all subtests, the neutralent analytical results showed that the desired treatment levels were met.

4.6.3 CN, CNB, and CNS Treatment References.

4.6.3.1 Department of the Army, Field Manual 3-9 (FM 3-11.9), *Potential Military Chemical/Biological Agents and Compounds*, 12 December 1990.

4.6.3.2 Project Manager for Non-Stockpile Chemical Materiel, *Plan for Destruction of Recovered Munitions Using the Explosive Destruction System at Former Camp Sibert, Alabama*, Annex G, April 2009.

4.6.3.3 Morrisey, K. M., J. L. Ruth, R. L. Cheicante, W. R. Creasy, B. R. Williams, M. S. Hulet, and A. M. Schenning, *Small-Scale Neutralization of CNB and CNS Mixtures Using Sodium Hydroxide Solution: Application to EDS Operations*, June 2008.

4.6.3.4 U.S. Army Chemical Materials Agency, Project Manager for Non-Stockpile Chemical Materiel, *Explosive Destruction System Phase 2 Series CNB and CNS Fills Test Report*, Final March 2012.

4.7 Smoke Compounds Treated with Sodium Hydroxide (NaOH)

- Chlorosulfonic acid ($ClHO_3S$)
- Sulfur trioxide + chlorosulfonic acid + lead tetroxide (FS Smoke)
- Titanium tetrachloride + lead tetroxide (FM Smoke).

4.7.1 Standard Procedure for FS Smoke and FM Smoke. Per Sandia National Laboratories' Phase II Report (Ref. 4.7.2.1), these smoke chemical fills are highly acidic. As they will be corrosive to the metal of the vessel, they should be treated as rapidly as feasible with a 10x volumetric ratio of 20 wt.% NaOH solution to the smoke material. Agitation should not be stopped during the treatment process as significant amounts of precipitate can form. Heating is unnecessary, as the reactions are exothermic [for example, chlorosulfonic acid reacts "violently" with NaOH (Ref. 4.7.2.2)]. Once the pH

of the vessel contents is confirmed as highly basic (pH greater than 12), the vessel should be drained and rinsed 3 times with water before opening.

Chlorosulfonic acid can react with NaOH as follows:

$$CIHO_3S + 3NaOH \rightarrow NaCI + Na_2SO_4 + 2H_2O$$

Per pound of chlorosulfonic acid (mw = 116.52):

$$1 \text{ lb } CIHO_3S \times \frac{1 \text{ mol } CIHO_3S}{116.52 \text{ lb } CIHO_3S} \times \frac{3 \text{ mol NaOH}}{\text{mol } CIHO_3S} \times \frac{40 \text{ lb NaOH}}{\text{mol NaOH}} = 1.03 \text{ lb NaOH}$$

Using a 20 percent NaOH (by weight) solution:

$$1.03 \text{ lb NaOH} \times \frac{453.6 \text{ g}}{\text{lb}} \times \frac{1 \text{ liter}}{243.8 \text{ g NaOH}} = 1.92 \text{ liters (0.51 gal) 20\% NaOH (by wt)}$$

On a volumetric basis: 0.069 gallons of $ClHO_3S$, the volume of 1 pound of $ClHO_3S$, requires 0.51 gallon of 20 wt.% NaOH, a 7.4:1 v:v ratio. Thus, the specified volumetric ratio of 10 gives a molar excess of approximately 0.35.

Sulfur trioxide, a component of FS smoke along with chlorosulfonic acid, reacts with NaOH as follows:

$$SO_3 + 2NaOH \rightarrow Na_2SO_4 + H_2O$$

The 10x volumetric ratio specified for chlorosulfonic acid should be sufficient to react with FS smoke.

Titanium tetrachloride (FM smoke) can react with NaOH as follows:

$$TiCI_4 + 4NaOH \rightarrow 4NaCI + TiO_2 + 2H_2O$$

Per pound of titanium tetrachloride (mw = 189.69):

$$1 \text{ lb } TiCI_4 \times \frac{1 \text{ mol } TiCI_4}{189.69 \text{ lb } TiCI_4} \times \frac{4 \text{ mol NaOH}}{\text{mol } TiCI_4} \times \frac{40 \text{ lb NaOH}}{\text{mol NaOH}} = 0.84 \text{ lb NaOH}$$

Using a 20 percent NaOH (by weight) solution:

$$0.84 \text{ lb NaOH} \times \frac{453.6 \text{ g}}{\text{lb}} \times \frac{1 \text{ liter}}{243.8 \text{ g NaOH}} = 1.57 \text{ liters (0.41 gal) 20\% NaOH (by wt)}$$

Note: Titanium dioxide (TiO_2) is insoluble in both cold and hot water, but is soluble in an alkaline solution.

On a volumetric basis: 0.070 gallon of $TiCl_4$, the volume of 1 pound of $TiCl_4$, requires 0.41 gallon of 20 percent NaOH (by weight), a 5.9:1 v:v ratio. Thus, the specified volumetric ratio of 10 gives a molar excess of 0.70.

For example (a 4.2-inch mortar with 0.52 gallon FM):

$$0.52 \text{ gal FM} \times \frac{10 \text{ gal 20\% NaOH}}{\text{gal FM}} = 5.2 \text{ gal (19.7 liters) 20\% NaOH (by weight)}$$

4.7.2 Smoke Compounds Treated with Sodium Hydroxide (NaOH) References.

4.7.2.1 Sandia National Laboratories, *DRAFT Explosive Destruction System Phase II Report*, Section 4.7, April 1999.

4.7.2.2 Chlorosulfonic acid Safety Data Sheet (SDS), http://www.sciencelab.com/msds.php?msdsId=9927496.

ATTACHMENT C-5
RCRA WASTE ANALYSIS
QUALITY ASSURANCE/QUALITY CONTROL PLAN

(This page intentionally left blank.)

RCRA WASTE ANALYSIS
QUALITY ASSURANCE/QUALITY CONTROL PLAN

February 2016

(This page intentionally left blank.)

TABLE OF CONTENTS

Section/Paragraph **Title** **Page**

LIST OF ILLUSTRATIONS ..... Attachment C-5-ii
LIST OF TABLES ..... Attachment C-5-ii
ACRONYMS ..... Attachment C-5-iii

1.0 INTRODUCTION ..... Attachment C-5-1
1.1 Purpose ..... Attachment C-5-1
1.2 QA/QC Objectives ..... Attachment C-5-2
1.3 Responsibilities and Authority ..... Attachment C-5-3

2.0 DATA QUALITY OBJECTIVES ..... Attachment C-5-4
2.1 Sampling and Analysis Objectives ..... Attachment C-5-4
2.2 Data Collection/Sampling Objectives ..... Attachment C-5-4

3.0 SAMPLING QA/QC ..... Attachment C-5-6
3.1 Sample Containers, Preservation, Handling, and Management ..... Attachment C-5-7
3.2 Chain-of-Custody ..... Attachment C-5-11
3.3 Field QA/QC for RCRA Waste Sampling Analysis ..... Attachment C-5-13
3.4 Health and Safety Protocols ..... Attachment C-5-13

4.0 LABORATORY QA/QC ..... Attachment C-5-18
4.1 Preventive Maintenance ..... Attachment C-5-19
4.2 Routine Assessment of Precision, Accuracy, and Comparability of Analytical Data ..... Attachment C-5-19
4.3 Data Quality and Data Deliverables ..... Attachment C-5-21
4.3.1 Data Quality Assessment and Data Deliverables ..... Attachment C-5-21
4.3.2 Data Qualifiers ..... Attachment C-5-23
4.4 Corrective Action ..... Attachment C-5-24
4.5 QA Reports to Management ..... Attachment C-5-26

5.0 RECORDKEEPING ..... Attachment C-5-27

LIST OF ILLUSTRATIONS

Figure	Title	Page
1	Example of a Sample Container Label	Attachment C-5-10
2	Example of a Chain-of-Custody Record	Attachment C-5-12

LIST OF TABLES

Table	Title	Page
1	Requirements for Liquid Samples	Attachment C-5-8
2	Requirements for Solid Samples	Attachment C-5-9
3	Sample Quantity Requirements	Attachment C-5-14

ACRONYMS

AHWMMA	Alabama Hazardous Waste Management and Minimization Act
ASTM	American Society for Testing and Materials
DOT	Department of Transportation
DQO	data quality objective
EDS	Explosive Destruction System
EPA	Environmental Protection Agency
GC/MS	gas chromatograph/mass spectrometer
MAP	Mobile Analytical Platform
MDL	method detection limit
NELAP	National Environmental Laboratory Accreditation Program
NIOSH	National Institute for Occupational Safety and Health
OS	original sample
OSD	original sample duplicate
PQL	practical quantitation limit
QA	quality assurance
QA/QC	quality assurance/quality control
QC	quality control
%RSD	percent relative standard deviation
RCMD	Recovered Chemical Materiel Directorate
RCRA	Resource Conservation and Recovery Act
RPD	relative percent difference
RSA	Redstone Arsenal
RSA-EDS	Redstone Arsenal Explosive Destruction System

TIC	total ion chromatogram
TSDF	treatment, storage, and disposal facility
VOC	volatile organic compound

1.0 INTRODUCTION

The procedures and methodologies used to characterize Explosive Destruction System (EDS) operation wastes will ensure proper treatment of wastes; safe handling and storage of treatment residues; and safe handling, treatment, or disposal of wastes shipped offsite. This document summarizes quality assurance/quality control (QA/QC) measures to ensure adequate sampling and analysis of waste streams. The Army will sample and analyze liquid and solid wastes for chemical agent concentrations at the onsite Mobile Analytical Platform (MAP) under the U.S. Army Chemical Materials Agency *Programmatic Laboratory and Monitoring Quality Assurance Plan*. This plan addresses only the QA/QC requirements for Resource Conservation and Recovery Act (RCRA) waste sampling and analysis.

A contract laboratory will be used to analyze liquid and solid waste samples for RCRA hazardous waste constituents and characteristics in accordance with *Test Methods for Evaluating Solid Waste, Physical/Chemical Methods*, SW-846, current edition. The contract laboratory selected will be an accredited National Environmental Laboratory Accreditation Program laboratory.

Detailed information on waste characteristics, waste analysis, and waste characterization methodologies for EDS operations is in **Section C-2** of this permit modification application.

1.1 Purpose

The primary purpose of waste sampling and analysis is to ensure that wastes are properly characterized in compliance with RCRA requirements for general waste analysis [40 CFR 270.14(b)(2); AAC 335-14-8-.02(5)(b)2]. Waste sampling and analysis also is performed to ensure the safe management of wastes being stored or treated, proper disposition of treatment residues, and proper characterization of waste for shipment to a permitted hazardous waste treatment, storage, and disposal facility (TSDF).

This plan establishes the requirements that will be followed to ensure RCRA waste sampling and analysis objectives are met, that all data obtained are technically sound, statistically valid, and properly documented. This plan also identifies the tools that will be used to measure the degree of certainty that all objectives have been met.

1.2 QA/QC Objectives

Quality Assurance (QA) is a systematic approach to ensure that processes and activities meet quality, safety, technical, and management requirements, and that the data and results compiled for waste analysis are valid and properly documented. QA for the EDS project operations will ensure that waste sampling and laboratory analysis operations are performed in accordance with approved plans and procedures. Quality Control (QC) is the mechanism through which QA achieves its goals. The primary objective of this plan is to control and characterize any errors associated with the collected data. QA activities, such as using standard procedures for locating sample sites and collecting samples, are intended to limit the introduction of errors. QC activities, such as collecting duplicate samples and including blanks in sample sets, are intended to provide the information required to characterize any errors in the data. Other QC activities, such as planning the QC program and auditing ongoing and completed activities, ensure that the specified procedures are followed and that the QA information needed for characterizing errors is obtained.

The second QA/QC objective is to confirm that waste sampling and analysis has been conducted according to the specifications of the EDS Waste Analysis Plan and requirements of this QA/QC Plan. QA/QC activities will include:

- Field inspections – performed by the QA Officer or designee, depending on the activity. The inspections will be primarily visual examinations but may include measurements of materials and equipment used, techniques employed, and the final products. The purpose of these inspections is to verify that a specific guideline, specification, or procedure for the activity is successfully completed. Checklists are completed to document results.

- Field testing – performed on the site by the QA Officer or designee according to specified procedures.

- Laboratory analyses – performed by the contract laboratory on samples of waste. The purpose of laboratory analyses is to determine constituents or characteristics present and their concentration level.

- Verifying contract laboratory maintains instruments and performs calibrations.

1.3 Responsibilities and Authority

The Recovered Chemical Materiel Directorate (RCMD) Site Manager will be responsible for ensuring that appropriate data are provided to Redstone Arsenal (RSA) for submittal to the state and federal regulatory agencies, as stipulated by the RSA Alabama Hazardous Waste Management and Minimization Act (AHWMMA) Hazardous Waste permit. External audits and surveillances, either announced or unannounced, will be conducted as required. Additional external audits or surveillances will be conducted by other qualified organizations as requested by RCMD. All documents and data produced by the contract laboratory will be eligible for inspection. The environmental regulatory agencies may also review these data to ensure that the EDS operations personnel are complying with permit requirements as they pertain to waste characterization and treatment operations.

2.0 DATA QUALITY OBJECTIVES

Data quality objectives (DQOs) are qualitative and quantitative statements developed by data users to specify the quality of data needed from a particular activity. The Environmental Protection Agency (EPA) provides the basis for developing the DQOs (EPA/240/B-06/001, February 2006).

The DQOs for waste sampling and analysis will include, but will not be limited to, the following.

2.1 Sampling and Analysis Objectives

DQOs for waste sampling and associated data analyses are:

- Determine if waste samples are representative of the wastes at the time the samples were taken
- Determine if treatment residue (neutralent wastes) concentration values meet the treatment level requirements
- Ensure waste characterization is adequate for waste acceptance at a permitted hazardous waste TSDF
- Ensure laboratory analytical results can be validated.

2.2 Data Collection/Sampling Objectives

Collected data must be scientifically sound, of known quality, and thoroughly documented. The DQOs for the data assessment are:

- Accuracy[1] – The accuracy of an analytical method is represented as the mean of the percent recovery of the target analyte from a given matrix. The quality of the data can be assured through the comparison of individual data values, expressed as percent recovery, to established QC limits. QC limits are derived from analysis of standard matrix QC samples, solvent (nonmatrix), QC samples, or surrogate analytes in the field samples.

[1] When measuring accuracy, the contract laboratory will prepare and analyze matrix spike duplicate samples.

- Precision[2] – The precision will be the agreement between the collected samples (duplicates) for the same parameters, at the same location, and from the same collection device.

- Representativeness – The representativeness will address the degree to which the data accurately and precisely represent a real characterization of the population, parameter variation at a sampling point, sampling conditions, and the environmental condition at the time of sampling. The issue of representativeness shall be addressed for the following points:

  - Based on the waste stream and its volume, an adequate number of samples are collected

  - The representativeness of selected media has been accurately defined

  - The sampling and analytical methodologies are appropriate

  - The environmental conditions at the time of sampling are documented.

- Completeness – The completeness shall be defined as the ability of the sampling and analytical methodologies to accurately measure the constituents of concern present in the waste. The goal for completeness is 95 percent.

- Comparability – The comparability of the data generated shall be defined as the data that are gathered using standardized sampling methods, standardized analysis methods, and quality-controlled data reduction and validation methods.

- Sensitivity – Reflects the ability of the analytical method to detect analytes of interest below the level of concern. This goal is achieved by identifying the level of concern, choosing a method with appropriate detection limit, and ensuring the laboratory analyses calibration standards are at or below the level of concern.

[2] When measuring precision, the contract laboratory will prepare and analyze matrix spike duplicate samples.

3.0 SAMPLING QA/QC

Methods used to obtain a representative sample will be consistent with sampling approaches and protocols described in *Test Methods for Evaluating Solid Waste, Physical/Chemical Methods*, SW-846, current edition. The selected sampling methods used to characterize EDS waste streams are summarized in **Section C-2** of this permit modification application, and are from: *Test Methods for Evaluating Solid Waste, Physical/Chemical Methods*, SW-846, current edition, *Annual Book of ASTM Standards*, American Society for Testing and Materials (ASTM), current edition; or other EPA-recognized methods.

The basic sampling procedure for general RCRA waste analysis will be as follows:[3]

- Obtain samples using a precleaned sampler.
- Fill sample containers according to laboratory instructions. Sample containers may arrive from laboratory with preservatives already added to container as applicable.
- Label sample containers.
- Properly clean and decontaminate sample containers and sampling hardware or dispose of sampling equipment as applicable.
- Custody-seal all sample containers and place samples in a durable ice-filled cooler or comparable receptacle for transport to the laboratory or immediately place in a refrigerator for storage pending shipment to the laboratory for analysis. Protective material may be placed around the sample containers prior to placement in the cooler or comparable receptacle as necessary.
- Complete the chain-of-custody and laboratory request-for-analysis forms.
- Review all paperwork and enclose the forms in a leaktight, polyethylene bag taped to the underside of the cooler lid or comparable receptacle.

[3] All samples will be analyzed for and cleared of chemical agent before the samples are transferred to the contract laboratory for hazardous waste characterization analyses.

- Seal the coolers or comparable receptacle with tape and mark in accordance with Department of Transportation (DOT) and Army requirements, as applicable.

- Transport coolers to the analytical laboratory.

3.1 Sample Containers, Preservation, Handling, and Management

Sample container selection, preservation, handling, and management are critical to sample quality. Considering waste compatibility, durability, volume, and analytical sensitivities, the containers listed in **Tables 1** and **2** are recommended for the EDS waste sampling efforts. **Tables 1** and **2** also provide preservation requirements and holding times that will be followed to preserve sample integrity.

All sample containers will be labeled with at least the following information:

- A unique alphanumeric identifier
- Date and time of collection
- Sample collector's name
- Preservatives used
- Analyses/parameters requested.

An example of a sample container label is provided in **Figure 1**. Immediately after collection, filled sample containers will be placed on ice or ice packs, if necessary, in durable coolers or comparable receptacles for transport to the laboratory or samples may immediately be placed in a refrigerator pending shipment to a laboratory for analysis. RCRA analyses will be conducted at a contract laboratory within the allowable holding times for sample analysis. Coolers or comparable receptacles will be tightly sealed before sample shipment occurs. Samples then will be transported to offsite laboratories to ensure delivery within the allowable holding times for sample analysis. All sample collection, preparation, packaging, transportation, and analysis will conform to the requirements of SW-846, current edition. The contract laboratory will provide sample containers, labels, and preservatives for parameters of interest.

Table 1. Requirements for Liquid Samples

Parameter	Holding Time[a]	Bottle Type	Preservative[b]	Standard Volume	Minimum Volume
Chemical Agent[c]	N/A N/A	Stainless Steel or Glass jar or bottle with a Teflon-lined cap	Cool to 0–6°C Cool to 0–6°C	25 mL 125 mL	2 mL 2 mL
CN/PS/DA/PD	N/A N/A	Stainless Steel or Glass jar or bottle with a Teflon-lined cap	Cool to 0–6°C Cool to 0–6°C	25 mL 125 mL	2 mL 2 mL
Corrosivity/pH	Analyze immediately	HDPE plastic	N/A	250 mL	50 mL
Ignitability	NS	Glass	None	500 mL	100 mL
TC Metals	180 days	HDPE plastic	pH<2: HNO_3; ≤6°C	1 L	100 mL
TC Mercury	28 days	HDPE plastic	pH<2: HNO_3; ≤6°C	500 mL	100 mL
TC Volatile Organics (D-list)	14 days to ZHE, 14 days from ZHE to analysis	Amber glass 40-mL vial with PTFE-lined septum cap	pH<2: HCl; Cool to 0–6°C	2 x 500 mL	500 mL
TC Semivolatile Organics (D-list)	7 days to extract; 40 days to analyze	Amber glass with PTFE-lined cap	Cool to 0–6°C	2 x 1 L	1 L

Notes:

[a] Holding times are from the date of collection as referred to in the Federal Register, Vol. 49, No. 209, October 26, 1984, as applicable.

[b] Preservatives for RCRA analysis from Chapter 3 and Chapter 4 of SW-846, 2014. The Army has no equivalent preservatives for chemical agent and industrial chemical analysis, so the preservation is based on similarities to semivolatile analysis.

[c] Chemical agent analysis is performed at the RSA-EDS site Mobile Analytical Platform.

CN	=	chloroacetophenone	mL	=	milliliter	PS	=	chloropicrin
DA	=	diphenylchloroarsine	N/A	=	not applicable	PTFE	=	polytetrafluoroethylene (Teflon®)
HDPE	=	high-density polyethylene	NS	=	None specified	TC	=	toxicity characteristic
L	=	liter	PD	=	phenyldichloroarsine	ZHE	=	zero headspace extraction

Reference: *Test Methods for Evaluating Solid Waste, Physical/Chemical Methods*, SW-846, current edition.

Table 2. Requirements for Solid Samples

Parameter	Holding Time[a]	Bottle Type	Preservative[b]	Standard Amount	Minimum Amount
Chemical Agent[c]	N/A	Glass	Cool to 0–6°C	50 g	20 g
Ignitability	7 days	Glass	None	100 g	30 g
TC Metals	180 days	HDPE plastic	≤6°C	100 g	25 g
TC Mercury	28 days	HDPE plastic	≤6°C	100 g	25 g
TC Volatile Organics (D-list)	TCLP Extract within 7 days, 40 days to analyze	Amber glass	Cool to 0–6°C	100 g	25 g
TC Semivolatile Organics (D-list)	TCLP extract within 14 days, preparative extract within 14 days; 40 days to analyze	Amber glass	Cool to 0–6°C	100 g	50 g

Notes:

[a] Holding times are from the date of collection as referred to in the Federal Register, Vol. 49, No. 209, October 26, 1984, as applicable.

[b] Preservatives for RCRA analysis from Chapter 3 and Chapter 4 of SW846, 2014. The Army has no equivalent preservatives for chemical agent and industrial chemical analysis, so the preservation is based on similarities to semivolatile analysis.

[c] Chemical agent analysis is performed at the RSA-EDS site Mobile Analytical Platform.

g = gram
HDPE = high-density polyethylene
TC = toxicity characteristic
TCLP = Toxicity Characteristic Leaching Procedure

Reference: *Test Methods for Evaluating Solid Waste, Physical/Chemical Methods*, SW-846, current edition.

Sample ID No.: _____

_____

Sample Description: _____

_____

Collection Date/Time: _____

Preservative: Yes ___ Type ___ No ___

Analysis: _____

Sampled By: _____

P-0197-009/label.cdr
9/28/12

Figure 1. Example of a Sample Container Label

Sampling procedures that will be used at the EDS are designed to ensure that each sample is accounted for at all times. The primary objectives of the sample control procedures are as follows:

- Each sample collected for analysis is uniquely identified.
- Important and necessary sample constituents are preserved (e.g., refrigerated, capped).
- Samples are protected from loss, damage, or tampering.
- Any alteration of samples during collection or shipping (e.g., preservation, breakage) is documented.
- A record of sample custody and integrity is established.
- The correct samples are analyzed and are traceable to the applicable data records (e.g., chain-of-custody, field records, request for analysis, laboratory ledgers).

As part of sample management procedures, personnel collecting the samples will maintain a permanent record of sampling activities. This record will include: the purpose of sampling; date and time of

collection; sample number; sampling location, sampling methodology, container description, waste description (metal fragments, rinsewater, etc.); description of process originating the waste; name and address of field contact; number and volume of samples; field observations; destination and transporter; and signature of collector.

Transportation of samples will be in accordance with DOT, EPA, and Army requirements. Hazardous waste samples will be properly packaged, marked, and labeled. Shipping papers will be prepared as required by DOT regulations, EPA requirements, and Army regulations and guidelines.

All equipment used to sample waste materials will be disposable or designed for easy decontamination. Contaminated disposable equipment will be managed as hazardous waste, as appropriate. Cleanable equipment will be thoroughly decontaminated prior to reuse. Decontamination solutions will be managed as hazardous waste, as appropriate.

3.2 Chain-of-Custody

A chain-of-custody record will accompany samples at all times. An example of a chain-of-custody form is included as **Figure 2**. The personnel performing the sampling will be responsible for initiating the chain-of-custody procedures at the time samples are collected. A chain-of-custody record form will be used to document sample collection activities, including sampling site, sample identification, number of samples, and date and time of collection. The form also will document the names of responsible individuals and dates and times of custody transfers.

Samples will be received at the laboratory by a designated sample custodian. This individual will carefully review received samples and documentation for compliance with applicable sampling and documentation requirements such as type and condition of container, sample preservation, collection date, and chain-of-custody records. After verifying that all samples submitted are listed and that the required information is listed on the form, the sample custodian will sign and date the chain-of-custody form. The sample custodian will then store and secure the samples appropriately (e.g., in locked refrigerator).

Chain-of-custody documentation for samples will continue throughout the analytical process. After logging in and storing the samples, the sample custodian will distribute sample-receiving logs, which will list sample numbers and analyses to be performed, to designated laboratory personnel. Upon completion of analyses, results will be submitted to the laboratory data management section along with QA/QC information. Much of the analytical results will be used to characterize wastes prior to the wastes being

Page ____ of ____

Analysis Request Form
Chain of Custody
MBFORM-43 Revision 6
Issue Date: August 20, 2012

Print Form

DELIVER TO: US ARMY RDECOM, ECBC, EML
ATTN: Steven D. Norman, E3330, RM 184
5183 Blackhawk Rd, Aberdeen Proving Ground, MD 21010

Requester Contact Information:

POC/ORG:
ALT POC/ORG:
ADDRESS:
PHONE #: Fax #:
EMAIL:

PROJECT:
SAMPLE LOCATION:
SAMPLER(S)/ORG:

LIST ANALYTES REQUESTED FOR ANALYSIS

ANALYTE LIST*: GA, GB, GD, GF, HD, HN-1, HN-3, L, DIMP, DMMP, MPA, EMPA, IMPA, PMPA, 1,4-Dithiane, 1,4-Thioxane, Thiodiglycol ** Additional analytes available on request

COLLECTION DATE and TIME	SAMPLE NAME (Limit to 30 characters)	MATRIX	NUMBER OF CONTIANERS	CONTAINER TYPE	PRESERVATIVE								COMMENTS

☐ **Observed Suspect Contaimination (Check box to indicate a high probability of chemical warfare agent presence, e.g. visible liquid, leaking munition, etc.)**

Relinquished By: (Print) (Signature) Date/Time	Received By: (Print) (Signature) Date/Time
Relinquished By: (Print) (Signature) Date/Time	Received By: (Print) (Signature) Date/Time
Relinquished By: (Print) (Signature) Date/Time	Received By: (Print) (Signature) Date/Time

Figure 2. Example of a Chain-of-Custody Record

sent to a permitted hazardous waste TSDF. All data sheets and laboratory records will be retained as part of the permanent record.

3.3 Field QA/QC for RCRA Waste Sampling Analysis

The goal of the RCRA waste sampling and analysis effort is to provide representative information regarding the characteristics of wastes generated during EDS operations. The laboratory chosen for this RCRA analysis will be NELAP-certified, have significant capacity and quality to meet analytical demand, provide timely and complete data packages, and provide technical support in the form of sample kits and shipping supplies. Both field and laboratory blanks will be prepared by the laboratory. For each waste stream sampled, appropriate QA/QC samples will be collected, as shown in **Table 3** and described below.

Field QC samples may include trip blanks and/or duplicate samples. Trip blanks are used to verify that field procedures do not contaminate containers or samplers. They are prepared using analyte-free water when samples are to be analyzed for volatile organic compounds (VOCs). At least one trip blank will be prepared and analyzed for each cooler used for storing and transporting VOC samples.

Duplicates are samples collected at the same time from the same source and are used to measure sample homogeneity and analytical precision. At least one duplicate will be collected every sampling event. There shall be a minimum of one duplicate per lab set. If only a few samples are taken, there will still be one duplicate.

3.4 Health and Safety Protocols

During all sampling activities, strict compliance with industrial hygiene and safety standards will be mandatory. All personnel involved in sampling activities will be trained in the applicable safety procedures; the use of all cleaning, decontamination, and sampling equipment; and proper cleaning and decontamination techniques. Sampling personnel will have received Occupational Safety and Health Administration health and safety training for hazardous waste operations. Sampling personnel will be required to wear protective gear as dictated by the Health and Safety Plan. If personnel accidentally contact waste material, decontamination procedures will be performed.

Table 3. Sample Quantity Requirements

Waste Stream	Parameter/Analysis[a]	Sample[b]	Field Duplicate Sample	Trip Blank[c]
Sulfur Mustard (HD/HS/HT) and Nitrogen Mustard (HN-3) Neutralents	H or HN-3	(1) – 25 mL Stainless steel bottle or 125 mL glass jar or bottle with a Teflon-lined cap	(1) – 25 mL Stainless steel bottle or 125 mL glass jar or bottle with a Teflon-lined cap	
	TC Metals	(1) – 1 L HDPE bottle (1) – 500 mL HDPE bottle	(1) – 1 L HDPE bottle (1) – 500 mL HDPE bottle	
	TC SVOCs	(2) – 1 L Amber glass bottles w/PTFE-lined cap	(2) – 1 L Amber glass bottles w/PTFE-lined cap	
	TC VOCs	(3) – 40 mL Amber glass VOA vials	(3) – 40 mL Amber glass VOA vials	(1) – 40 mL Amber glass VOA vial (deionized water)
	pH	(1) – 250 mL HDPE bottle	(1) – 250 mL HDPE bottle	
	Ignitability	(1) – 500 mL Glass bottle	(1) – 500 mL Glass bottle	
Lewisite Neutralents	Lewisite	(1) – 25 mL Stainless steel bottle or 125 mL glass jar or bottle with a Teflon-lined cap	(1) – 25 mL Stainless steel bottle or 125 mL glass jar or bottle with a Teflon-lined cap	
	TC Metals	(1) – 1 L HDPE bottle (1) – 500 mL HDPE bottle	(1) – 1 L HDPE bottle (1) – 500 mL HDPE bottle	
	TC SVOCs	(2) – 1 L Amber glass bottles w/PTFE-lined cap	(2) – 1 L Amber glass bottles w/PTFE-lined cap	
	TC VOCs	(3) – 40 mL Amber glass VOA vials	(3) – 40 mL Amber glass VOA vials	(1) – 40 mL Amber glass VOA vial (deionized water)
	pH	(1) – 250 mL HDPE bottle	(1) – 250 mL HDPE bottle	
	Ignitability	(1) – 500 mL Glass bottle	(1) – 500 mL Glass bottle	

Table 3. Sample Quantity Requirements (Continued)

Waste Stream	Parameter/Analysis[a]	Sample[b]	Field Duplicate Sample	Trip Blank[c]
Phosgene (CG) Neutralents	pH	(1) – 250 mL HDPE bottle	(1) – 250 mL HDPE bottle	
	TC Metals	(1) – 1 L HDPE bottle (1) – 500 mL HDPE bottle	(1) – 1 L HDPE bottle (1) – 500 mL HDPE bottle	
	TC SVOCs	(2) – 1 L Amber glass bottles w/PTFE-lined cap	(2) – 1 L Amber glass bottles w/PTFE-lined cap	
	TC VOCs	(3) – 40 mL Amber glass VOA vials	(3) – 40 mL Amber glass VOA vials	(1) – 40 mL Amber glass VOA vial (deionized water)
CN/CNB/CNS Neutralents	CN, PS	(1) – 25 mL Stainless steel bottle or 125 mL glass jar or bottle with a Teflon-lined cap	(1) – 25 mL Stainless steel bottle or 125 mL glass jar or bottle with a Teflon-lined cap	
	TC Metals	(1) – 1 L HDPE bottle (1) – 500 mL HDPE bottle	(1) – 1 L HDPE bottle (1) – 500 mL HDPE bottle	
	TC SVOCs	(2) – 1 L Amber glass bottles w/PTFE-lined cap	(2) – 1 L Amber glass bottles w/PTFE-lined cap	
	TC VOCs	(3) – 40 mL Amber glass VOA vials	(3) – 40 mL Amber glass VOA vials	(1) – 40 mL Amber glass VOA vial (deionized water)
	pH	(1) – 250 mL HDPE bottle	(1) – 250 mL HDPE bottle	
Arsenical Neutralents (DA/PD)	DA/PD	(1) – 25 mL Stainless steel bottle or 125 mL glass jar or bottle with a Teflon-lined cap	(1) – 25 mL Stainless steel bottle or 125 mL glass jar or bottle with a Teflon-lined cap	
	TC Metals	(1) – 1 L HDPE bottle (1) – 500 mL HDPE bottle	(1) – 1 L HDPE bottle (1) – 500 mL HDPE bottle	
	TC SVOCs	(2) – 1 L Amber glass bottles w/PTFE-lined cap	(2) – 1 L Amber glass bottles w/PTFE-lined cap	
	TC VOCs	(3) – 40 mL Amber glass VOA vials	(3) – 40 mL Amber glass VOA vials	(1) – 40 mL Amber glass VOA vial (deionized water)
	Ignitability	(1) – 500 mL Glass bottle	(1) – 500 mL Glass bottle	
	pH	(1) – 250 mL HDPE bottle	(1) – 250 mL HDPE bottle	

Table 3. Sample Quantity Requirements (Continued)

Waste Stream	Parameter/Analysis[a]	Sample[b]	Field Duplicate Sample	Trip Blank[c]
Mustard Arsenical Neutralents (HD/DA/PD)	H/DA/PD	(1) – 25 mL Stainless steel bottle or 125 mL glass jar or bottle with a Teflon-lined cap	(1) – 25 mL Stainless steel bottle or 125 mL glass jar or bottle with a Teflon-lined cap	
	TC Metals	(1) – 1 L HDPE bottle (1) – 500 mL HDPE bottle	(1) – 1 L HDPE bottle (1) – 500 mL HDPE bottle	
	TC SVOCs	(2) – 1 L Amber glass bottles w/PTFE-lined cap	(2) – 1 L Amber glass bottles w/PTFE-lined cap	
	TC VOCs	(3) – 40 mL Amber glass VOA vials	(3) – 40 mL Amber glass VOA vials	(1) – 40 mL Amber glass VOA vial (deionized water)
	pH	(1) – 250 mL HDPE bottle	(1) – 250 mL HDPE bottle	
	Ignitability	(1) – 500 mL Glass bottle	(1) – 500 mL Glass bottle	
FM and FS Smoke Neutralents	pH	(1) – 250 mL HDPE bottle	(1) – 250 mL HDPE bottle	
	TC Metals	(1) – 1 L HDPE bottle (1) – 500 mL HDPE bottle	(1) – 1 L HDPE bottle (1) – 500 mL HDPE bottle	
	TC SVOCs	(2) – 1 L Amber glass bottles w/PTFE-lined cap	(2) – 1 L Amber glass bottles w/PTFE-lined cap	
	TC VOCs	(3) – 40 mL Amber glass VOA vials	(3) – 40 mL Amber glass VOA vials	(1) – 40 mL Amber glass VOA vial (deionized water)
	Ignitability	(1) – 500 mL Glass Bottle	(1) – 500 mL Glass Bottle	
Rinsewaters	TC Metals	(1) – 1 L HDPE bottle (1) – 500 mL HDPE bottle	(1) – 1 L HDPE bottle (1) – 500 mL HDPE bottle	
	TC SVOCs	(2) – 1 L Amber glass bottles w/PTFE-lined cap	(2) – 1 L Amber glass bottles w/PTFE-lined cap	
	TC VOCs	(3) – 40 mL Amber glass VOA vials	(3) – 40 mL Amber glass VOA vials	(1) – 40 mL Amber glass VOA vial (deionized water)
	pH	(1) – 250 mL HDPE bottle	(1) – 250 mL HDPE bottle	
	Ignitability	(1) – 500 mL Glass bottle	(1) – 500 mL Glass bottle	

Table 3. Sample Quantity Requirements (Continued)

Waste Stream	Parameter/Analysis[a]	Sample[b]	Field Duplicate Sample	Trip Blank[c]
Used Decontamination Solution	H/HN-3/Lewisite (as applicable)	(1) – 25 mL Stainless steel bottle or 125 mL glass jar or bottle with a Teflon-lined cap	(1) – 25 mL Stainless steel bottle or 125 mL glass jar or bottle with a Teflon-lined cap	
	TC Metals	(1) – 1 L HDPE bottle (1) – 500 mL HDPE bottle	(1) – 1 L HDPE bottle (1) – 500 mL HDPE bottle	
	TC SVOCs	(2) – 1 L Amber glass bottles w/PTFE-lined cap	(2) – 1 L Amber glass bottles w/PTFE-lined cap	
	TC VOCs	(3) – 40 mL Amber glass VOA vials	(3) – 40 mL Amber glass VOA vials	(1) – 40 mL Amber glass VOA vial (deionized water)
	pH	(1) – 250 mL HDPE bottle	(1) – 250 mL HDPE bottle	
	Ignitability	(1) – 500 mL Glass bottle	(1) – 500 mL Glass bottle	

Notes:

[a] Sulfur mustards HD/HS/HT are analyzed as H.
[b] All sample containers should be filled completely.
[c] One trip blank per cooler containing VOC samples.

CN = chloroacetophenone
CNB = carbon tetrachloride + chloroacetophenone + benzene
CNS = chloroacetophenone + chloropicrin + chloroform
DA = diphenylchloroarsine
FM smoke = titanium tetrachloride
FS smoke = sulfur trioxide + chlorosulfonic acid
H = Levinstein mustard
HD = distilled sulfur mustard
HDPE = high-density polyethylene
HN-3 = nitrogen mustard
HS = sulfur mustard
HT = mustard-T mixture
L = liter
mL = milliliter
PD = phenyldichloroarsine
PS = chloropicrin
PTFE = polytetrafluoroethylene (Teflon®)
SVOC = semivolatile organic compound
TC = toxicity characteristic
TNT = trinitrotoluene
VOA = volatile organic analysis
VOC = volatile organic compound

4.0 LABORATORY QA/QC

An analytical laboratory must conduct its operations in such a way as to provide reliable information. The QA/QC of data generated by the analytical laboratory will be controlled by a Laboratory Quality Assurance Plan. At a minimum, the contract laboratory used for RCRA analysis will follow the guidelines presented in this section and the laboratory QA/QC plan will document the following:

- Sample custody and management practices
- Sample preparation and analytical procedures
- Instrument maintenance and calibration procedures
- Internal QA/QC measures including the use of method blanks, spiked samples, and duplicates.

Internal QA/QC checks are established by submitting QA and QC samples to the analytical laboratory. The frequency of laboratory QC samples is per batch (20 or fewer samples) and is defined by the laboratory's QA/QC plan and procedures. The types of laboratory QC samples include the following:

- *Method Blank*. Defined as laboratory grade water taken through the entire analytical procedure to determine if samples are accidentally contaminated by chemicals in the laboratory.
- *Laboratory Control Samples*. Defined as known matrix spiked with compound(s) representative of the target analytes and is used to document laboratory performance.
- *Matrix Spikes.* Defined as an aliquot of a matrix spiked with a known concentration of the analytes of interest. Matrix spikes are subjected to the entire analytical procedure to indicate the appropriateness of the method for the matrix by measuring recovery.
- *Duplicate*. Defined as a second aliquot taken from the original sample container and analyzed separately to test repeatability of an analysis.

4.1 Preventive Maintenance

Preventive maintenance procedures are intended to prevent instrument malfunctions and to detect as early as possible any potential problems with the analytical equipment that might result in inaccurate analyses. Analytical instruments or instrument systems in use at the laboratory will undergo routine preventive maintenance as recommended by the vendor or manufacturer, or if such maintenance is warranted, based on equipment operating experience. All maintenance procedures will be documented.

Each item of equipment, including reference standards, shall, when appropriate, be labeled, marked, or otherwise identified to indicate its calibration status.

The laboratory will have documented instructions on the use and operation of all relevant equipment, on the handling and preparation of items, and for calibrating equipment. All instructions, standards, manuals, and reference data relevant to the laboratory's operation will be maintained up to date and will be readily available to the staff.

Where computers or automated equipment are used for the capture, processing, manipulation, recording, reporting, storage, or retrieval of calibration or test data, the laboratory will ensure the following: (1) the computer software is documented and adequate for use; (2) computer and automated equipment is maintained to ensure proper functioning and provided with the environmental and operating conditions necessary to maintain its integrity; and (3) establish and implement procedures for protecting the integrity of the data.

Maintenance and repair records will be maintained on all instruments and instrument systems, as required, and will become part of the operating record.

4.2 Routine Assessment of Precision, Accuracy, and Comparability of Analytical Data

QA for analytical data from collected samples will include evaluation of precision, accuracy, and comparability, which are discussed below.

<u>Precision</u>

Precision in reference to laboratory analysis is a measure of mutual agreement among individual measurements of the same property, usually under prescribed similar conditions. Precision is assessed by

means of laboratory duplicate/field replicate sample analysis. The laboratory objective for precision is to be within the control limits for the analytical methods as published for the EPA-recognized methods or Army methods, as applicable.

Precision of the chemical laboratory data will be measured through the use of matrix spike duplicate samples and calculated as the percent relative standard deviation (%RSD). The standard deviation, s, is calculated from the variance, s^2, as follows:

$$s^2 = \frac{\sum_{i=1}^{n} (x_i - \bar{x})^2}{n-1}$$

where $\bar{x}$ is the mean value of a variable, x_i is the value of an individual measurement of a variable, n is the number of data points, and s is obtained from:

$$s = (s^2)^{1/2}$$

The %RSD is then:

$$\%RSD = s/\bar{x}$$

The standard deviation and %RSD are calculated for every constituent measured.

<u>Accuracy</u>

Accuracy means the nearness of a result, or the mean of a set of results, to the true value. Accuracy is assessed by means of reference samples and percent recoveries. The laboratory objective for accuracy is to be within the control limits for the analytical methods as published for the EPA-recognized method or as established by the laboratory.

Accuracy of laboratory data will be measured through the use of matrix spike duplicate samples and will be assessed through the calculation of percent recovery from any certified standard that the laboratory analyzes as part of its ongoing QA/QC program. The percent recovery is calculated as follows:

$$\%\text{Recovery} = \frac{SSR - SR}{SA} \times 100\%$$

where SSR is the spiked sample result, SR is the sample result, and SA is the spike added. The laboratory also will be required to run a sufficient number or type of blanks to detect laboratory contamination.

Comparability

Comparability is the degree to which one data set can be compared with another. Comparability is achieved by using consistent methods and standards that are traceable to a reliable source. All data will be reported in units consistent with the conventions used for the given analyte and methods employed. Comparability can be enhanced by using:

- EPA SW-846 or EPA 600/4-88-039 methods of analysis
- ASTM methods
- National Institute for Occupational Safety and Health (NIOSH) Pocket Guide.

4.3 Data Quality and Data Deliverables

To ensure hazardous waste characterization data are reliable, the contract laboratory will operate and conduct analyses according to the performance quality requirements identified in SW-846 Chapter 1, Section 4.

4.3.1 Data Quality Assessment and Data Deliverables

Data quality assessments will evaluate whether the data generated by the laboratories is consistent with the established DQOs.

For the RCRA waste characterization, the laboratory will furnish a QA Manual (or QA Program Plan) that defines the quality procedures and policies specific to that facility. An Environmental Scientist, Laboratory Manager, or QA Coordinator will be responsible for reviewing the reports from that facility to

ensure consistency with RCRA limits and with the furnished QA Manual. An audit of the analytical laboratory may be performed by an Environmental Scientist or assignee at any time during the EDS operations.

4.3.1.1 RCRA Characterization Deliverables

For the RCRA analysis, data packages will consist of complete data packages with raw data. A request for electronic deliverables may be made as appropriate. Summary reports for the RCRA characterization will include but not be limited to:

- Chain-of-custody, Field Sampling Logs, any associated correspondence
- Name and address of laboratory (on letterhead)
- EPA or other approved method used (with title and method number)
- Client delivery order (or job) number
- Sample identification, client, and laboratory number
- Date and time sampled
- Date and time sample received by laboratory
- Date and time sample was extracted/digested
- Dilution factor
- Sample matrix
- Date and time sample was analyzed
- Parameters tested
- Units reported
- Concentration of each parameter found
- Reporting limit or other similar limit for each parameter [practical quantitation limit (PQL)]
- Report date
- Case narrative for each sample batch and any anomalies encountered with samples
- Signature of laboratory supervisor or director (or assignee).

4.3.1.2 QC Deliverables for RCRA Characterization

Metals – Toxicity Characteristic Leaching Procedure extraction logs (EPA 1311), method blank results, lab control sample and lab control sample duplicate [% recoveries with calculated relative percent

difference (RPD)], matrix spike and matrix spike duplicate (% recoveries with calculated RPD), original sample (OS), and original sample duplicate (OSD) with calculated RPD.

Organics – extraction logs, method blank results, lab control sample, (% recovery), and matrix spike (% recovery), and surrogates (% recovery).

Wet Chem – extraction preparation logs, method blank results, lab control sample and lab control sample duplicate (% recoveries with calculated RPD), matrix spike and matrix spike duplicate (% recoveries with calculated RPD), OS, and OSD with calculated RPD.

Other – For methods in which no spikes can be performed (for example, specific gravity) an original sample and sample duplicate analysis must be performed and reported (OS/OSD with calculated RPD %).

4.3.2 Data Qualifiers

In cases where results are out-of-control and the laboratory supervisor and the QA Coordinator determine that re-preparation and re-analysis are not possible, then the results for that sample or analytical batch shall be qualified. The qualifiers used for waste analysis results shall be consistent with EPA Contract Laboratory Program data qualifiers that are listed and defined below. Additional notes and explanations may accompany the reports to further describe the occurrence. All non-detectable results will be identified with a less than sign with the detection limit value, when applicable. Commonly used data qualifiers include the following:

ND: This flag indicates the compound was not detected at or above the method detection limit (MDL).

U: This flag indicates the compound was detected above the MDL but below the PQL.

J: This flag indicates an estimated value. This flag is used (1) when estimating a concentration for tentatively identified compounds where a 1:1 response is assumed and (2) when the mass spectral and retention gas chromatograph/mass spectrometer (GC/MS) identification criteria and the result is less than the PQL but greater than zero.

N: This flag indicates presumptive evidence of a compound. This flag occurs only on a mass spectral library search. It is applied to all total ion chromatogram (TIC) results.

B: This flag is used when the analyte is found in the associated method blank as well as in the sample. It indicates probable blank contamination and warns the data user to take appropriate action. This flag is used for TICs as well as positively identified target compounds.

E: This flag indicates compounds with concentrations exceeding the upper level of the calibration range of the instrument for that analysis. If one or more of the compounds have a response greater than the upper level of the calibration range, the sample or extract shall be diluted and re-analyzed. If the dilution of the extract causes any compounds identified in the first analysis to be below the calibration range in the second analysis, both results are delivered with the flag "DL" attached to the second analysis.

D: This flag is used for all compounds identified in an analysis at a secondary dilution factor.

X: Other specific flags may be required to properly define the results. If used, the flags shall be fully described with the description attached to the sample summary package. Use Y and Z if more than one flag is needed.

R: This flag is used to indicate that the analytical result is rejected. A reason for the data rejection is required.

4.4 Corrective Action

Corrective action will be initiated by the laboratory QA/QC Officer when required to ensure data quality meets the criteria established in the laboratory QA Plan. Corrective action of QA activities will be initiated in response to performance audits, system audits, comparison studies, or QA program audits.

Standard laboratory-initiated corrective actions consist of checking instruments, apparatus, obtaining new reagents and/or standards, and calibration verification or recalibration. If standard laboratory-initiated corrective actions do not identify and correct the problem, then instrument custodians, instrument system specialists, method authors, or chemists will troubleshoot and repair or correct the system performance.

<u>General Approach to Corrective Action</u>

For either immediate or long-term corrective actions, steps comprising a closed loop corrective action system are as follows: (1) define the problem; (2) assign responsibility for investigating the problem;

(3) investigate and determine the cause of the problem; (4) determine a corrective action to eliminate the problem; (5) assign and accept responsibility for implementing the corrective action; (6) implement the correction and determine its effectiveness; and (7) verify that the corrective action has eliminated the problem.

Undesirable performance or analytical errors will be identified as a problem in precision or bias. Either the results of replicate measurements were not in close agreement or the results were not in agreement with the expected (target) or reference values. Also, there is a possibility that both situations will occur concurrently. Rules for finding and resolving the causes of these deficiencies are not well established. However, the approach that the analyst takes must be systematic and based on common knowledge and experience of the laboratory personnel. A team effort from the analysts, the immediate supervisor, and the Laboratory Manager will be required. The most obvious causes are to be eliminated first. If the initial investigation does not resolve the problem, the attention is to be directed to the more complex possibilities.

Obvious simple errors such as the transposition and transcription errors of data, the use of incorrect calculations or calculation errors, incorrect readings and recording of instrument readouts, the use of the wrong analytical procedures, and the lack of attentiveness to details in the laboratory will lead to imprecision or bias. A review and internal audit of the data and a detailed discussion with the analysts concerning how and when they performed specific steps in the laboratory procedures may indicate the cause of, and a corrective action for, the deficiency.

Bias

Inexperience of the analyst, instrument instability, variable contamination in the samples, variability of the method blanks, poor reagent quality and control, or fluctuations of the laboratory environment are possible causes of bias. Approaches to resolving these causes are the following: (1) check for obvious and simple errors first; (2) repeat the analysis at the point where sample is first introduced into the analytical procedure; (3) repeat the analysis on a different instrument or use another gas chromatograph column; and (4) have another analyst repeat the analysis.

Accuracy

Incorrect calibrations, losses of analyte during sample preparation or analysis, incorrect calibration standards, stock solutions, innate bias of the analyst, matrix effects on the analyte, instrumental shifts,

instrument not calibrated, and contaminations in the sample or standards are possible causes of inaccuracy. Approaches to resolving these causes are the following: (1) check for the obvious and simple errors first; (2) repeat the analysis at the point where sample is first introduced into the analytical procedure; (3) repeat the analysis with new calibration standards; (4) recalibrate the analytical instrument; (5) repeat the analysis on another instrument that is calibrated; (6) have another analyst repeat the analysis; (7) repeat the analysis with fresh or new samples, if possible; and (8) check analytical instrument and detector.

4.5 QA Reports to Management

QA reports will be generated by the laboratory to document the analytical results and organizational performance. These reports will contain, at a minimum, reports of system or performance audits; reports of required corrective actions implemented; assessment of the generated data precision, accuracy, and comparability; and resolution of previously reported problems. The content, frequency, and recipient of these reports will be established in the laboratory's QA Plan.

5.0 RECORDKEEPING

The laboratory performing RCRA analyses will maintain a record system that will include the documentation of all samples received, analyzed, analyses conducted, preparations, QC challenges, maintenance of laboratory equipment, and reports prepared. The Redstone Arsenal-Explosive Destruction System (RSA-EDS) site operations will maintain documentation on samples collected, chain-of-custody, results, and reports received. All information will become part of the operating record and will be kept until closure.

(This page intentionally left blank.)

SECTION D
PROCESS DESCRIPTION

[40 CFR 270.14(b)(8); AAC 335-14-8-.02(5)(b)8]

D.1 Overview

The Redstone Arsenal Explosive Destruction System (RSA-EDS) operations may contain up to two Explosive Destruction System (EDS) units.

An EDS is a container-like transportable system designed to safely treat/destroy recovered munitions and other items that contain chemical agent or industrial chemical fills with or without energetic components. The system uses explosive shaped charges to detonate a munition burster, if present, and breach the munition/item wall, exposing the chemical fill. Once the chemical fill is exposed, an appropriate treatment reagent is added to treat the chemical fill and explosive residues. Mixing with heating follows, if required. After the chemical fill is treated, and the treatment level confirmed, the resulting neutralent is drained into a liquid waste container, and the Containment Vessel is rinsed. After the rinsate is drained into a separate waste container, the vessel is purged with an inert gas (for example, helium) and a headspace vapor sample is collected; once the vapor concentration is confirmed safe, the Containment Vessel door is opened. (See **Attachment F-3** for details on monitoring equipment.) Solid waste materials are then removed from the Containment Vessel and placed in appropriate solid waste containers. All wastes are then stored pending shipment to a permitted treatment, storage, and disposal facility (TSDF) for further treatment or ultimate disposal.

This section presents a general overview of the EDS treatment process. A physical description and other information on the EDS units are provided in **Section D-1** of this permit modification application.

D.2 EDS Flow Process

A simplified block flow diagram of the EDS operation is presented in **Figure D-1**.[1]

[1] All figures are located at the end of this section.

D.2a RSA-EDS Site Operations

Recovered munitions and other items containing chemical agent or industrial chemicals will be transferred to the RSA-EDS site for treatment. Each EDS unit can be operated to treat one or more recovered munitions or items simultaneously. Treatment configurations may include one to six, or more munitions or other chemical-filled items in each EDS unit per process cycle, provided the net explosive weight (NEW) does not exceed the value established for the EDS unit.

Table D-1[2] identifies the potential chemical fill, associated treatment reagent, and treatment level for EDS operations at the RSA-EDS site.

A brief discussion of the EDS operational steps follows.

D.2a(1) Helium Leak Check

After the Containment Vessel door is closed, the helium leak detector is used to check the adequacy of the Containment Vessel door seals. The helium leak detector is attached to the Containment Vessel door and is used to create a vacuum between the Grayloc® seal and the ethylene propylene diene monomer (EPDM) O-ring to verify the adequacy of the seal. The annular space vacuum pump down and helium leak checks are performed for all operations.

D.2a(2) Unpack Recovered Munitions and Other Items

Overpacked recovered munitions or other items will be brought to the unpack area of an Environmental Enclosure. The munitions or items may or may not be removed from the overpack, depending on the condition of the munition or item inside. In some cases, the entire overpack containing items will be processed.

[2] All tables are located at the end of this section.

D.2a(3) Place Item(s) in Fragment Suppression System (FSS) or Advanced Fragment Suppression System (AFSS) and Attach Explosive Shaped Charges

Depending on the types and numbers of items being treated, the items to be processed will be put into an expendable metal holder then placed inside either an expendable structural framework known as the FSS or the reusable AFSS with expendable steel rods.

Both frameworks serve to connect, hold, and align explosive charges that open the main body of items being treated to expose chemical fill and to protect the Containment Vessel interior from the high velocity fragments resulting during detonation of shaped charges, burster casing, and munitions (or other items).

Once shaped charges are attached, a final detonator connection is made; then the Containment Vessel door will be closed and sealed.

D.2a(4) Access Item and Destroy Burster (If Present)

Once the seal is confirmed, the firing system is used to remotely and simultaneously initiate the shaped charges, causing the burster, if present, to detonate.

D.2a(5) Treat Chemical Fill and Un-reacted Explosive Residues

Following detonation, a treatment reagent will be pumped/sprayed into the Containment Vessel. The Containment Vessel will be heated, if necessary, to a specified temperature, up to 100°C [212°F], depending on the chemical fill to be treated. The Containment Vessel will be rotated to agitate the contents of the vessel, promoting mixing between chemical fill and reagent for a complete reaction. Containment Vessel temperature and pressure will be monitored during the treatment process.

D.2a(6) Sample Liquid Wastes (Neutralent)

A liquid sample will be collected from the Containment Vessel to monitor the progress of the reaction or confirm treatment is complete. Once the treatment level (**Table D-1)** is achieved, liquid wastes (neutralent) will be drained from the Containment Vessel into a waste container.

D.2a(7) Rinse with Water

Rinsewater is pumped into the Containment Vessel to remove neutralent residue, and the vessel is rotated. The first water rinse may be ambient temperature or heated up to 100°C [212°F] depending on the chemical fill treated. The Containment Vessel rinsewaters will be drained to a waste container separate from the container used for the neutralent waste.

D.2a(8) Flush Vapors and Sample Headspace

The Containment Vessel headspace will be flushed with an inert gas (e.g., helium or nitrogen) to the carbon filter and a headspace vapor sample will be collected, as applicable, to assess the vapor concentration in the vessel.

D.2a(9) Remove Solid Wastes

Once the vapor concentration is confirmed safe, the Containment Vessel door will be opened. The solid wastes will be visually inspected for any unexploded energetic material, and then manually removed from the vessel and placed into waste containers for solid waste.

D.2a(10) Rinse Containment Vessel with Water

Once the solid wastes are removed, the Containment Vessel will then be manually rinsed with water to remove any remaining debris. This rinsewater will be collected from the vessel into a debris pan placed underneath the Containment Vessel. The rinsewater will then be placed from the debris pan into a waste container. Any remaining solid materials will be placed into a solid waste container. Both liquid and solid wastes will be transferred to a less than 90-day hazardous waste storage area or RSA permitted container storage igloo pending shipment offsite to a permitted TSDF for further treatment or ultimate disposal.

D.2a(11) Prepare for Next Item(s)

Prior to treating subsequent chemical-filled items, the Containment Vessel interior will be cleaned, and the interior wall of the vessel, its sealing surface, and its door will be visually inspected. The Containment Vessel door metal seal and O-ring will be replaced after each operation. The electrical connection feedthroughs will be replaced as necessary.

D.3 Waste Management

Wastes generated from the EDS treatment operation will be transferred to a less than 90-day hazardous waste storage area or RSA permitted container storage igloo pending shipment offsite to a permitted TSDF for further treatment or ultimate disposal.

A detailed description of the waste streams, including applicable waste codes, is presented in **Section C**, Waste Characteristics, of this permit modification application.

D.4 Utilities and Site Support Equipment at RSA-EDS Site

A description of utilities and site support equipment is provided in **Attachment D-1**.

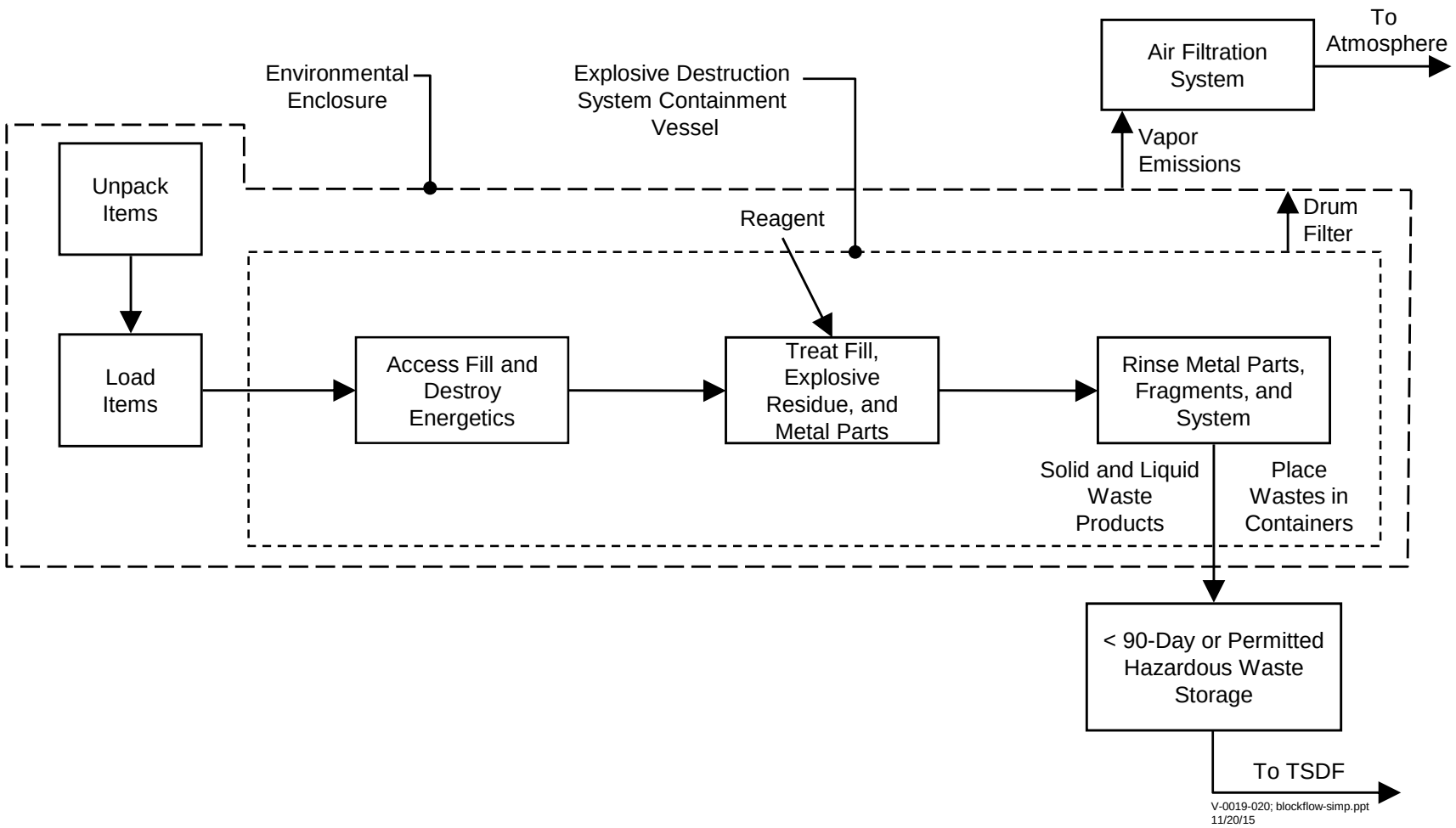

Figure D-1. Simplified Block Flow Diagram for the EDS

Table D-1. Chemical Fills, Treatment Reagents, and Treatment Levels

Chemical Fill	Treatment Reagent	Treatment Level[a]
Sulfur Mustards (HD/HS/HT)[b]	90 vol.% MEA	≤ 50 mg/L mustard agent
Nitrogen Mustard (HN-3)	90 vol.% MEA	≤ 50 mg/L mustard agent
Lewisite (L)	20 wt.% $NaMnO_4$	≤ 50 mg/L lewisite
Phosgene (CG)	20 wt.% NaOH	pH > 7
Carbon tetrachloride + chloroacetophenone + benzene (CNB)	20 wt.% NaOH and Propylene glycol	≤ 1,000 ppm (CN)
Chloroacetophenone + chloropicrin + chloroform (CNS)	20 wt.% NaOH and Propylene glycol	≤ 1,000 ppm (CN) ≤ 1,000 ppm (PS)
Arsenicals[c] [Diphenylchloroarsine (DA) Phenyldichloroarsine (PD)	20 wt.% $NaMnO_4$	≤ 50 mg/L (DA) ≤ 50 mg/L (PD)
Mustard (HD) Arsenicals (DA, PD)	90% MEA	≤ 50 mg/L mustard agent ≤ 50 mg/L (DA) ≤ 50 mg/L (PD)
Titanium tetrachloride (FM smoke)	20 wt.% NaOH	pH ≥ 10
Sulfur trioxide + chlorosulfonic acid (FS smoke)	20 wt.% NaOH	pH ≥ 10

Notes:

[a] When treating chemical agent fills, the neutralent and rinsewaters must meet the treatment level shown. See **Attachment C-4** for Treatment Chemistries.

[b] HD/HS/HT will be measured as H.

[c] Arsenicals may be a single chemical as listed or any combination thereof.

MEA = monoethanolamine
mg/L = milligram per liter
$NaMnO_4$ = sodium permanganate
NaOH = sodium hydroxide
ppm = parts per million
vol.% = volume percent
wt.% = weight percent

1 (This page intentionally left blank.)

D-1 CONTAINERS [40 CFR 270.15 and 264 Subpart I; AAC 335-14-8-.02(6) and 335-14-5-.09]

The Alabama Department of Environmental Management (ADEM) has determined that the EDS meets the definition of a container, per ADEM Administrative Code 335-14-1-.02(1)(a)47, which defines a container as any portable device in which a material is stored, transported, treated, disposed of, or otherwise handled.

Section D-1 focuses on the physical description, characteristics, and operation of the EDS and its associated subsystems.

Waste characterization information on the recovered munitions and other items that will be processed by the EDS units is provided in **Section C-1** of this permit modification application.

Treatment effectiveness for the EDS units is discussed in **Section C-1a** of this permit modification application.

D-1a Description of EDS Container [40 CFR 270.15 and 264 Subpart I; AAC 335-14-8-.02(6) and 335-14-5-.09]

The EDS is a container-like transportable treatment system (mounted on a trailer) comprised mainly of a Containment Vessel designed to destroy chemical-filled munitions with or without explosive components.

The EDS Containment Vessel serves as the reaction vessel for the subsequent treatment of chemical fills and deactivation of energetics. The EDS has been designed to be compatible with the chemical fills to be treated, the treatment reagents used during processing, as well as designed to contain the shock, munition fragments, and fill material during the munition opening process.

The two containers addressed in this permit modification application are the EDS units.

D-1a(1) Physical Characteristics [40 CFR 270.14(b)(1); AAC 335-14-8-.02(14)(a)1 and (a)2]

This section provides design information for the EDS units as well as the area in which they will be located. This information includes material of construction data, unit dimensions, unit design, and construction. **Figure D-1-1**[1] presents a layout of the major components of the EDS Phase 2 units.

D-1a(1)(a) EDS

The transportable EDS units are used to respond to recovered chemical munition incidents at locations other than RSA. There is no plan to regularly alter the EDS configurations. Up to two EDS Phase 2 units will be operated at the RSA-EDS site.

The EDS Phase 2 units will be capable of safely withstanding a detonation of up to 4.8 pounds of trinitrotoluene (TNT) equivalent explosives. In some instances when a munition/item cannot be safely removed from the overpack, both the munition/item and overpack will be treated in the EDS.

The EDS Phase 2 unit comprises the following components:

- Trailer Subsystem
- Lift Assist Subsystem
- Containment Vessel Subsystem
- Clamp Hanger Subsystem
- Hydraulic Nut Subsystem
- Rotary Agitation Subsystem
- Reagent Supply Subsystem
- Waste Transfer Subsystem
- Electrical Subsystem
- Explosive Opening Subsystem
- Helium Supply and Leak Detection Subsystem.

[1] All figures are located at the end of this section.

Table D-1-1[2] provides a summary of the EDS Phase 2 components. In addition to the figures presented in this section, drawings are provided in a separate attachment (Technical Data Package) of this permit modification application. A list of these drawings is provided in **Section M**.

The following sections describe each component and function.

D-1a(1)(a)(i) Trailer Subsystem

The EDS trailer provides the transportation and work area platform for the EDS unit and has on-board secondary containment for the Reagent Supply Subsystem and the Containment Vessel.

The EDS trailer is a dual-axle, single-drop trailer, with four hydraulic leveling jacks, two at the transition between the gooseneck and working decks and one between each of the dual wheels, which provide the capability to stabilize and level the trailer during setup. Custom tarps will cover the top and sides of the trailer when the EDS is transported or stored. The trailer is road legal on all U.S. roads and highways. A prime mover (tow vehicle) equipped with a fifth wheel and standard light and air connections is needed to tow the trailer. The tow vehicle does not require any nonstandard alterations.

The Containment Vessel is mounted in front of the axles of the trailer with the Containment Vessel door facing toward the front of the trailer. The area between these components serves as operations and munitions loading areas. The electrical distribution panels, power conditioners, power panels, utility panel, and process panel are mounted at the front of the trailer on the gooseneck. The process controls and instrumentation displays are readily available from the operations and munitions loading area. The controls and displays for the vessel and supply tank heaters, tank level indicators, and hydraulic nut pump controls are located in the front of the operations and munitions loading area. The reagent supply platform is located on the curbside of the trailer. This platform houses the reagent supply panel, water and reagent supply tanks, valves, pumps, and piping. The hydraulic nut pump is controlled from the vessel control panel located on the roadside of the trailer. The processing valves are located on both the reagent supply platform and the Containment Vessel door. The main piping and electrical conduit run on the underside of the trailer deck.

The working surface of the trailer is about 11 inches below the Containment Vessel mounting surface and is made of stainless steel for compatibility with chemical agents and treatment reagents. The trailer has

[2] All tables are located at the end of this section.

an open stainless steel grid over a stainless steel secondary containment pan. The area around the secondary containment, gooseneck, and vessel is covered with 1/4-inch stainless steel diamond plate. The secondary containment pan floor is sloped from the gooseneck toward the Containment Vessel and is equipped with spray nozzles to wash down the pan. The rails and the structure below the stainless steel working surface are made of carbon steel.

The trailer is accessed from three fold-down stairs and has additional foldout platforms on each side for access around the vessel and the clamp hanger superstructure. A safety rail surrounds the trailer, including the area where the electrical panels are mounted onto the gooseneck.

D-1a(1)(a)(ii) Lift Assist Subsystem

To aid lifting and positioning heavy objects either onto or off the trailer deck, the EDS trailer of the Phase 2 unit is equipped with a Lift Assist that is mounted to the overhead clamp hanger support frame. The Lift Assist comprises an articulated arm crane (jib crane) with a computer-controlled electric winch that allows vertical lift and positioning from ground level to the EDS Containment Vessel loading area. The winch is a commercially manufactured item and the articulated arm jib crane is a commercially tailored product. The electric winch is removed during transportation. Physical characteristics are presented in **Table D-1-1**.

D-1a(1)(a)(iii) Containment Vessel Subsystem

The EDS Containment Vessel is where the recovered munitions and other items being destroyed are accessed and the chemical fill is treated. The Containment Vessel is designed to contain the explosive blast and fragments created when the munition accessing explosive is detonated as well as prevent the release of chemical agent liquid and vapors. The vessel serves as the reactor vessel for treating the chemical fill and explosive component residue, providing mixing and heating (when needed) to facilitate treatment. The cylindrical Containment Vessel is made of forged type 316 stainless steel. A hinged door allows easy access for inserting items to be treated and removing debris. The door is secured with two large clamp-halves attached to four threaded rods with hydraulic nuts (refer to the Hydraulic Nut Subsystem). The Containment Vessel relies on its all-metal seal to contain each detonation and chemical fill. An EPDM O-ring, along with the all-metal seal, provides an annular airspace to measure the stability of the annular space vacuum and to test the vessel door seal. Following detonation, treatment reagents are pumped into the Containment Vessel through medium pressure valves and piping attachments on the vessel door.

Two in-line, T-shaped paddles are welded to the interior wall of the Containment Vessel to aid with mixing during the treatment process.

Secondary containment for the Containment Vessel is provided by the EDS Trailer Containment Pan. Dimensions of the pan are provided in **Table D-1-1**. Containment volume for the Phase 2 EDS Trailer Containment Pan is more than 100 percent of the Containment Vessel volume. The secondary containment calculations for the Phase 2 EDS Trailer Containment Pan are provided in **Attachment D-2**.

Current Phase 2 Containment Vessels were designed and fabricated to American Society of Mechanical Engineers (ASME) Boiler and Pressure Vessel Code, Section VIII, Division 1 (1995 edition) and were tested to 4,200 pounds per square inch (psi) to provide a design pressure of 2,800 psi at 51.7°C (125°F).

The Containment Vessel comprises the following major components:

- Hinged pressure vessel
- Door assembly with door valves and fittings
- Containment Vessel heaters
- Door hinge and support jack.

Hinged Pressure Vessel

The 21.2-cubic foot, hinged pressure vessel is a 63.3-inch-long cylindrical cup with an inside diameter of 29.2 inches and a bore depth of 56.6 inches. The side walls are 3.7 inches thick and the rear wall is 6.6 inches thick. The entire vessel is fabricated from a 316 stainless steel single forging with no welds and is designed to contain repeated detonations of up to 4.8 pounds of explosive (TNT equivalent).

Door Assembly

Figure D-1-2 shows an EDS Phase 2 Vessel Door.

The door assembly provides access to the interior of the Containment Vessel, ports for liquid and vapor sample transfer, and feedthrough connections for firing. The door assembly has the following features.

- Metal-to-metal seals for the door and feedthrough flange ensure total containment of solid, liquid, and vapor byproducts.

- An EPDM seal (O-ring) is also on the door and feedthrough flange to allow for leak testing the metal seal.

- The door has four stainless steel blast (protector) covers mounted on the interior side to protect connections during detonation operations.

- Manual medium pressure valves control flow through the fill and drain ports on the door assembly.

- A thermocouple monitors the internal temperatures during processing operations.

- The medium pressure, high-temperature, packed-stem valves protect the system components from the pressure spike during detonation.

- Manual medium pressure valves control flow of liquids and vapors to and from the Containment Vessel.

- No method of pressure relief (for example, rupture disk or pressure relief valve) is provided due to the risk of venting toxic vapors.

- Manual medium pressure valve assemblies are used to collect liquid and vapor samples.

- Quick disconnect fittings are provided for liquid and vapor flow.

- High voltage electrical feedthroughs connect the Firing System to the detonators inside the Containment Vessel.

Containment Vessel Heater

The Containment Vessel for the Phase 2 unit has six external two-piece band heaters that provide conductive heating to the contents inside the Containment Vessel when required to facilitate treatment.

An insulating blanket surrounds the Containment Vessel and band heaters to prevent heat loss to the surrounding area and to provide a barrier between operating personnel and vessel surfaces that can reach 220°C (428°F) during operation.

Temperature monitoring from the thermocouple provides feedback to the temperature controller located on the Containment Vessel control panel. The desired temperature can be set within a range of ±9°F on the Containment Vessel control panel. Normal starting temperature is 60°C (140°F).

Door Hinge and Support Jack

The door hinge assembly consists of a pin, bushings, features to open and close the door, adjustments for alignment with the Containment Vessel, and a mechanical stop that prevents the door from unintentionally closing when open.

The machine screw jack incorporates an alloy steel worm, which drives a high-tensile bronze worm gear. The worm shaft is supported by antifriction bearings with seals that prevent loss of lubrication. The housing is made of ductile iron that is rated to support the unit load. Fabric-type boot protectors are provided to cover the exposed portion of the lifting screw. The jack provides support for the Containment Vessel door and hinge when the door is open.

Physical characteristics of the Containment Vessel Subsystem are shown in **Table D-1-1**.

D-1a(1)(a)(iv) Clamp Hanger Subsystem

The EDS Phase 2 unit contains a Clamp Hanger Subsystem used for opening and closing the Containment Vessel door clamps and supporting their weight while the Containment Vessel door is open. This subsystem consists of two clamp hanger assemblies, one for each clamp half, with proximity sensors, two drive-pin assemblies that each attach to a clamp hanger assembly and a lead screw with an electric drive motor, weight-supporting superstructure, control panel, and pendant control used in lieu of control panel when precise movement is necessary.

D-1a(1)(a)(v) Hydraulic Nut Subsystem

The main function of the Hydraulic Nut Subsystem is to provide sufficient hydraulic pressure to adequately seal the Containment Vessel and door.

The Hydraulic Nut Subsystem consists of the following components:

- Hydraulic tensioner power unit

- Grayloc® clamp set
- Hydraulic nut assembly
- Pressure gauges
- Hydraulic hoses and connections
- Pendant controller.

The Hydraulic Nut Subsystem helps to provide an acceptable seal between the Containment Vessel and door. Two Grayloc clamp halves attached to four threaded steel rods with hydraulic nuts are clamped around the Containment Vessel door. The Containment Vessel relies on a Grayloc all-metal seal to contain the detonation and the chemical agent. As the nuts are tensioned, the steel rods apply pressure to the flange, pressing the door into the metal ring and forming a metal-to-metal seal between the door, the metal ring, and the Containment Vessel. Hydraulic nuts are used to provide the required pre-load on the clamp to ensure gas-tight Containment Vessel operation.

D-1a(1)(a)(vi) Rotary Agitation Subsystem

The Rotary Agitation Subsystem rotates the Containment Vessel 360 degrees and then reverses the direction for the same amount of time and revolutions, unless halted. The absolute encoder tracks Containment Vessel movement so that if halted in mid-cycle, the rotation is restarted in the direction and for the number of rotations required to complete the cycle.

The Rotary Agitation Subsystem includes the following components:

- Drive motor and mount assembly
- Vessel support assembly
- Hub/shaft assembly
- Absolute encoder
- Incremental encoder
- Fan motor.

Drive Motor and Mount Assembly

An electric motor and gearbox are mounted on the motor support structure. The gearbox output shaft provides a mechanical coupling with hub/shaft assembly. The Drive Motor and Mount Assembly includes the motor support structure, motor and gearbox to vessel hub coupler, and bearing assembly.

Vessel Support Assembly

The support structure near the front of the Containment Vessel holds the two casters that support the Containment Vessel as it rotates. The support structure at the rear of the Containment Vessel is a two-piece safety ring and mount assembly used during transport or if performing maintenance that requires the rotation shaft assembly to be disconnected from the Containment Vessel.

Hub/Shaft Assembly

The Hub/Shaft Assembly is located between the Containment Vessel and the drive motor gearbox output shaft. The drive motor turns the Containment Vessel through the Hub/Shaft Assembly. A slip ring, a coupler, and a bearing are installed on the hub/shaft. The slip ring is rated at 480 volts (V)/50 amperes (amp) and provides power to the Containment Vessel heaters during rotation. The coupler attaches the hub/shaft to the gearbox of the motor and takes up any misalignment between the two assemblies. The bearing holds the rotating shaft and attaches to the mount assembly.

Absolute Encoder

The Absolute Encoder is mounted on the aft (rear) shaft of the drive motor gearbox. The data from the encoder is used by the drive system to stop the Containment Vessel at the “home,” “fill,” and “drain” positions, in addition to rotating the Containment Vessel. Additionally, the encoder tracks the Containment Vessel position, ensuring an equal number of revolutions in the clockwise and counterclockwise directions.

Incremental Encoder

The Incremental Encoder located inside the electric drive motor controls the number of Containment Vessel revolutions.

Fan Motor

A fan motor is mounted on the top of the electric motor to prevent overheating of the drive motor.

D-1a(1)(a)(vii) Reagent Supply Subsystem

The Reagent Supply Subsystem is used to hold, heat, and transfer reagent and water used to treat the chemical fill and water to rinse the Containment Vessel.

The reagent supply platform is located on the curbside of the trailer. The platform contains hydraulic cylinders, a secondary containment pan, supply tanks, pumps, valves, and tubing for the Reagent Supply Subsystem. The hydraulic cylinders fold the platform onto the trailer deck for shipping and extend the platform for operations. The platform is slightly higher than the working deck of the trailer in the extended position. The adjustable folding legs support the platform. All the pumps are located on a pump rack, near the back edge of the platform.

The Reagent Supply Subsystem supplies the two stainless steel tanks located on the reagent supply platform with appropriate reagent, solvent, or water pending transfer to the Containment Vessel for chemical neutralization and rinsing. Tank 1 is intended for water, and Tank 2 is intended for reagents.

The tanks are equipped with external heaters for freeze protection and to increase treatment reaction rates, when desired. Two pneumatic double diaphragm source pumps transfer water and reagents through lines and manually controlled valves to the tanks. Two high-pressure supply pumps transfer water and reagents through lines and valves to the Containment Vessel. A valve panel allows for the sampling and removal of waste fluids from the Containment Vessel. Valves are located on the platform, the Containment Vessel door valve panel, and the secondary containment pan.

The Reagent Supply Subsystem includes the following components:

- Reagent supply panel
- Hose docking station
- Water and reagent tanks
- Pan pump panel
- Pan pump
- Vacuum pump
- Water and reagent supply pumps
- Reagent source pump
- Water source pump

- Air panel
- Waste quick-connect bracket.

Reagent Supply Panel

This panel provides the operator with access to the mounted valves to control the reagent supply system. Cutout windows allow visual access to the magnetic float level indicators on the supply tanks.

Hose Docking Station

The station located to the right of the reagent supply panel holds the effluent drain hose, reagent, helium, and water supply hose, vacuum hose, vacuum flange on helium leak detector hose, and the hydraulic tensioner pump hose during Containment Vessel rotation. Proximity switches prevent Containment Vessel rotation unless the hoses are in their docking station.

Water and Reagent Tanks

The two stainless steel tanks have electrical resistance heaters mounted on the bottom to heat the water and reagents. Tanks have thermocouples for temperature control and side-mounted float level indicators with high- and low-level switches. The low-level switch, when activated, will shut off the external tank heaters and sound an audible alarm.

Pan Pump Panel

A panel located on the rear of the reagent supply platform on the pump rack contains a quick-connect and three hose storage connections. Three storage quick-connects cap the hose lines to the trailer secondary containment pan, reagent supply platform secondary containment pan, and the strainer during non-operational periods. The functional quick-connect is piped through a valve to the pneumatic pan pump, which discharges to the pan waste container.

Pan Pump

A pneumatic double diaphragm pump is used for removing wastes from the secondary containment pan.

Vacuum Pump

The vacuum pump evacuates sample lines prior to collecting a liquid or vapor sample. The vacuum pump exhaust is routed through a process waste container with attached filter in the Waste Transfer Subsystem (as applicable depending on the chemical fill being treated) or the Environmental Enclosure Air Filtration System (AFS).

Water and Reagent Supply Pumps

Two pneumatically driven high-pressure supply pumps are used to supply water and reagent to the Containment Vessel from the tanks.

Reagent Source Pump

A pneumatic double diaphragm pump is used for filling the reagent supply tank from a drum or bulk containers.

Water Source Pump

A pneumatic double diaphragm pump is used to fill the water tank from a non-pressurized water source and can supply pressurized water to the nozzles in the trailer secondary containment pan.

Air Panel

A panel located on the side of the reagent supply platform next to the curb side stairs contains two air pressure regulators, a helium regulator, four quick-connects, and two valves. The air regulators control the maximum air pressure to the source pumps and the supply pumps. The helium regulator limits the maximum helium pressure for leak rate testing to approximately 20 psi. The two valves provide an auxiliary air connection for pneumatic tools, etc. The four quick-connects provide water or reagent to the spray nozzles in the trailer secondary containment pan, air supply inlet to the reagent supply platform, and helium inlet to the reagent supply platform.

Waste Quick-Connect Bracket

The bracket on the aft side of the reagent supply platform provides the hose quick-connects to a waste container. The bracket also contains an effluent sample collection station.

Physical characteristics of the Reagent Supply Subsystem are shown in **Table D-1-1**.

D-1a(1)(a)(viii) Waste Transfer Subsystem

The Waste Transfer Subsystem equipment is used to:

- Drain liquid and vent vapors from the Containment Vessel.
- Drain or pump out liquid from the trailer secondary containment pan and the reagent supply platform secondary containment pan for further transfer to applicable liquid waste containers.
- Filter vented system vapors through an ASZM-TEDA filter, depending on chemical fill being treated.
- Contain liquid wastes.

The liquid and vapor will be drained and vented from the Containment Vessel to United Nations (UN)-rated liquid waste containers. The container assemblies use weight scales to monitor container weight as a means to account for all effluents and prevent overfilling.

Four UN-rated waste containers will be initially used for liquid waste. The Containment Vessel waste transfer and secondary containment pan waste transfer diagrams (**Figures D-1-3** and **D-1-4**) depict a typical waste transfer setup using liquid waste containers. Waste containers 1 and 1A are connected to a three-way selector valve in the drain line from the Containment Vessel. The valve can be switched to fill either liquid waste container with its designated fill of either neutralent or rinsate. The liquid and vapor generated from chemical treatment and rinsing will be transferred from the Containment Vessel through a hose connected to waste containers 1 and 1A (**Figure D-1-3**). The vapor vents out of the liquid waste containers into UN-rated liquid waste container 2 where it vents to an attached silica gel/ASZM-TEDA filter (as applicable) or is connected to the AFS carbon filter system. Waste container 3 is used to contain

liquids generated from washdowns contained in the trailer and platform secondary containment pans (**Figure D-1-4**). Department of Transportation (DOT)-approved open-head containers rated for the storage of solid waste will be used to contain solid waste materials.

Waste containers will be kept closed, except when adding or removing waste, and will not be opened, handled, or stored in a manner that may cause them to rupture or leak. Containers will be kept upright with lids securely closed and will not be stacked.

The liquid waste containers will be placed within a portable secondary containment pan capable of holding 10 percent of the total volume of all the stored containers, or 100 percent of the volume of the largest container, whichever is greater.

If incompatible wastes are stored in the area, they will be separated by compatibility, per the U.S. Environmental Protection Agency (EPA) Chemical Compatibility Chart, through the use of pallets, distance, portable berms, or other physical barriers.

A minimum two feet aisle space will be maintained to allow unobstructed movement of waste handling equipment, fire protection equipment, and emergency personnel and equipment. In addition, enough space should be left between containers to allow for visual inspection. Appropriate tools will be available to secure containers.

D-1a(1)(a)(ix) Electrical Subsystem

The Electrical Subsystem provides the required 480 V, 3-phase electrical power for the vessel, supply tank heaters, rotary agitation, and drive motor via two distribution panels. Conditioned 120 V power from two distribution panels is supplied to other subsystems. Electrical power can be supplied by utility power (130 amp minimum) or by a generator (178 kilowatt [kW], 480 V mobile generator). Electrical enclosures in the process area meet the National Electrical Manufacturer's Association (NEMA) 4X requirements for outdoor and corrosive use; all others are specified as NEMA 4 for outdoor use.

D-1a(1)(a)(x) Explosive Opening Subsystem

The Explosive Opening Subsystem consists of the FSS with explosive shaped charges or the AFSS plus the Firing System and donor charges.

Both the FSS and AFSS serve to connect, hold, and align explosive charges that open the main body of items being treated to expose chemical fill and to protect the Containment Vessel interior from the high velocity fragments that result during detonation of shaped charges, burster casings, and munitions (or other items). The following text describes each framework.

FSS

The FSS is constructed of 1018 steel or compatible mild steel and is comprised of the following:

- *Cylinder*. Top, bottom, cradle, stopper block (as required), and end plates or rings (as required).

- *Munition Holder*. Varies in configuration to accommodate various munitions and size (for example, 75mm, 155mm, 4-inch Stokes, etc.).

End plates are placed on each end of the FSS to further protect the rear wall of the Containment Vessel and the interior surfaces of the vessel door.

The FSS comes in seven sizes and requires twelve similar, but specific, munition holders. **Figures D-1-5** and **D-1-6** show the components of a typical munition FSS and a multiple (6-round) 4.2-inch mortar FSS, respectively. Drawings of the various FSS designs are provided as a separate attachment. A list of these drawings is provided in **Section M**. **Table D-1-2** presents the physical characteristics of the various FSS designs for the munition types that may be processed. The FSS must be fully assembled (item[s] to be destroyed, FSS, shaped charges) before it is placed in the Containment Vessel for processing.

AFSS

The AFSS is a reusable framework with expendable steel rods designed to contain a metal holder with munitions or other items within.

The AFSS consists of the main unit weldment, insert weldment, front capture plate, front spacer, 86 short rods, paddle gap cover, and two support plates. **Figure D-1-7** shows the AFSS and associated components. **Table D-1-3** summarizes the physical characteristics of the AFSS.

Donor (Explosive) Charges

Donor charges are used to access the munitions' and other items' fill, thereby releasing the chemical fill into the Containment Vessel. The donor charges are also used in destroying the munition burster explosive (if present). Donor charges consist of linear-shaped charges (LSCs) and conical-shaped charges (CSCs). The LSCs are used in both the FSS and AFSS to access the main body of the munition or item to expose the contents for chemical treatment and to disrupt the explosive train of the munitions. The primary requirement, cutting the walls of the munition(s) or item(s), is accomplished with pre-formed length(s) of copper-sheathed LSC with a cyclonite (RDX)-based explosive filler. The shape, length, and grains per foot of the LSC are specific for the type of munition(s) or item(s) to be treated. When processing multiple munitions, up to three LSCs may be used.

CSCs may be used in addition to an LSC in the FSS to puncture a munition burster and to detonate the burster explosives. Depending on the munition (or other item) type and x-ray result, one or two CSCs may be positioned on the upper shell of the FSS above the munition. CSCs are not used when processing multiple items nor when using the AFSS.

Detonators

Exploding bridge-wire detonators are used to initiate donor charges. The Firing System is used to electrically initiate the donor charges. The detonators used to initiate the LSCs are Reynolds type RP-1®; CSCs are initiated by Reynolds type RP-2®. Both detonator types are insensitive to unexpected or undesirable energy inputs (static, impact, etc.) and are detonated by the discharge of high current through the bridge-wire. The bridge-wire explodes and produces a shock wave, which, in turn, initiates the explosive in the shaped charges. The Firing System is used to simultaneously initiate the LSCs and the CSCs.

Firing System

The Firing System is a high-voltage capacitor discharge unit capable of firing four to six exploding bridge-wire detonators. The Firing System is connected to the detonators in the Containment Vessel by detonator cables, and is remotely operated through a detachable control module that allows the operator to arm and fire the Firing System from up to 350 feet away from the EDS. The firing system includes various features necessary to safely fire the detonators and to test and monitor the system and detonator cables. One of these features is a safety interlock plug to prevent inadvertent operation of the system.

D-1a(1)(a)(xi) Helium Supply and Leak Detection Subsystem

The functions of the Helium Supply and Leak Detection Subsystem are as follows:

- Pressurizes the Containment Vessel to check the integrity of the Grayloc seal and the EPDM O-ring of the Containment Vessel and high voltage feedthrough flange
- Measures the annular space vacuum between the Grayloc seal and O-ring mounted on the Containment Vessel door and the high voltage feedthrough flange
- Measures the helium migrating across the Grayloc seals into the annular spaces of the Containment Vessel door and the high voltage feedthrough flange
- Flushes vapors from the Containment Vessel and Containment Vessel door piping and fittings.

The Helium Supply and Leak Detection Subsystem consist of the following main components:

- Helium compressed gas cylinder
- Pressure regulators and gauges
- Flexible and rigid hoses
- Leak detector.

There are two major components to the Helium Supply and Leak Detection Subsystem: the helium supply component and the leak detector. The helium supply components will provide helium gas for pressurizing the vessel for the annular space and leak checks and for flushing the Containment Vessel headspace (nitrogen may be used as an alternative for headspace flushing). The inert compressed gas cylinders are approved DOT steel cylinders. The inert gas cylinders are located on the side of the right side set of stairs and secured by the bottle bracket.

Helium Supply and Leak Detection Subsystems will be used together to periodically check the Containment Vessel annular spaces and seals. The leak detector is mounted in the helium leak detector box on the trailer.

Attachment D-1 provides details on RSA-EDS Site Support Equipment, and Environmental Enclosure, and Support Systems.

D-1a(2) Operations and Maintenance [40 CFR 270.23(a)(2); AAC 335-14-8-.02(14)(a)2]

The EDS is a transportable system mounted on a trailer designed to destroy chemical-filled munitions/items with or without explosive components. Explosive shaped charges (linear or conical) are used to detonate the munition's burster, if present, and breach the munition or item wall to expose the chemical fill. Once the fill is exposed, chemical reagents are added, and the Containment Vessel is rotated and heated, if required. When treatment of the chemical fill is complete, waste materials are removed from the Containment Vessel, placed in waste containers, and temporarily stored pending transport offsite to a permitted TSDF for further treatment or ultimate disposal.

All operations and maintenance activities will be in accordance with EDS Standing Operating Procedures (SOPs) and the EDS Operations and Maintenance Manuals, current versions. The complete list of procedures will be maintained in the current version of the SOPs, which will be maintained onsite during operations.

D-1a(2)(a) Pre-Operations

Preventive maintenance checks and services (PMCS) will be performed to keep the EDS units in operating condition. Each EDS unit is prepared for operations and processing by first performing initial setup and pre-operations.

Prior to operating an EDS unit, Supply Tank 1 will be filled with water and Supply Tank 2 will be filled with reagents. Pre-mixed reagents will be pumped via a drum pump from drums or bulk containers into the Supply Tank. The vessel sealing surfaces are cleaned and lubricated. The supply pump will be checked for operability before treatment of the munitions. Background monitoring also will be completed.

The recovered munitions or items to be processed will be transferred to the EDS.

D-1a(2)(b) Operations

The EDS units will be operated in accordance with EDS SOPs, current versions. Any number of recovered items may be processed at a time in an EDS unit. Whether processing one or more items, the treatment operation is the same.

The operational scenario for the EDS consists of the following:

- Loading the item(s) to be processed
- Access fill and destroy energetic components, if present, by detonation
- Treat chemical fill and explosive components and residue; rinse metal parts, fragments, and system
- Waste transfer.

Loading

The items to be processed are placed in an expendable holder that can contain any combination of one or more munitions or items; then the holder is placed inside either a FSS or an AFSS. If using an AFSS, it will already be inside the Containment Vessel.

The shaped charges are placed onto the munition holder. Detonators are attached to the shaped charges. Once the expendable holder, including items to be processed and donor charges, has been completely assembled, it will be placed into the Containment Vessel.

Final detonator connections will be made using the interior detonator jack assembly. The Containment Vessel door will be closed and the door clamps pushed closed. The clamp rods then will be tightened.

The annular space between the Grayloc seal and the EPDM O-ring is leak-checked with helium.

Accessing Fill and Energetic Detonation of Munitions

Each EDS unit has two separate firing systems: a primary and a backup (firesets A and B). The appropriate firing system will be used to remotely and simultaneously initiate the shaped charges.

When ready, the firing sequence is initiated and the item is detonated.

Treatment of Chemical Fill, Explosive Residue, and Metal Parts and Fragments

The chemical fill will be treated, along with metal parts and fragments, in the Containment Vessel according to the SOP.

For treatment of detonated chemical-filled munitions and other items, the Containment Vessel will be heated (as applicable, depending on the chemical fill) to a specified temperature (up to 100°C [212°F]), and rotated after the appropriate reagent has been added via the spray nozzles. Liquid samples will be collected and analyzed to confirm a treatment level specified in **Table D-1** has been met. Once a treatment level is confirmed, the vessel band heaters will be turned off and the liquid wastes (neutralent) from the Containment Vessel drained into a waste container.

The Containment Vessel will then be rinsed with clean water and rotated. The first water rinse will be heated if required, depending on the chemical fill, to and maintained at about 100°C (212°F) and rotated. The rinsate is then drained into a waste container. Any additional rinses will be performed using water at ambient temperature. The Containment Vessel will then be purged with an inert gas and a headspace sample collected to verify that the chemical agent vapor concentration in the Containment Vessel is at acceptable levels to open the door. (Refer to **Attachment F-3** for a description of headspace monitoring.) The vessel door will then be opened. The solid wastes will be visually inspected, removed from the Containment Vessel, placed into a waste container, and sealed. Should any unexploded explosive components be found, they will be segregated from the other solid wastes, placed in a separate container, and transferred to explosive ordnance disposal (EOD) personnel for disposition or retreated in the EDS during a subsequent shot. An additional manual water rinse will be performed to remove any remaining solid debris inside the Containment Vessel. This rinsate will be collected in the debris pan and transferred to a liquid waste container. All wastes will be stored and managed as hazardous waste.

Before subsequent processing activities commence, the inside of the Containment Vessel will be cleaned and visually inspected. The Grayloc seal, EPDM O-ring seal, and any damaged or bent rods from an

AFSS will be replaced after each operation. The electrical connection feedthroughs will be replaced as necessary.

If the EDS undergoes closeout to prepare it to be moved to another location elsewhere, the EDS will be decontaminated and monitored to appropriate levels as detailed in **Section I-1(c)1** of the Closure Plan. If this occurs, EDS supplies and components will be removed from the operations area.

Waste Transfer

Liquid and gaseous waste effluents from the Containment Vessel will be drained through flexible hoses connected to waste containers 1 and 1A. Emissions from waste containers 1 and 1A will be diverted to a container fitted with an ASZM-TEDA filter or will be diverted to the AFS carbon filter system.

Wastes generated from EDS treatment operations and support activities will include the following:

- Neutralent and rinsates
- Spent decontamination solution and containment pan liquids
- Decontaminated metal parts and fragments
- Unexploded or untreated energetics or propellant material (unlikely to occur but could be generated)
- Spent carbon from drum filters and Environmental Enclosure AFS
- Spent prefilters and high efficiency particulate air (HEPA) filters from the Environmental Enclosure AFS
- Used personal protective equipment (PPE)
- Miscellaneous solid and liquid wastes as a result of support, maintenance, and cleanup activities
- Laboratory and sampling solid wastes

- Laboratory and sampling liquid wastes
- Dunnage from unpack activities
- Empty overpacks
- Grayloc seal and O-rings.

Section C of this permit modification application contains detailed descriptions of the wastes generated from the EDS operations and support activities as well as information on how wastes will be characterized.

All hazardous waste generated will be placed in UN-rated waste containers and managed in a less than 90-day hazardous waste storage area at the RSA-EDS site or RSA permitted container storage igloo, pending shipment offsite to a permitted TSDF.

D-1a(3) Management Practices [40 CFR 270.14(b)(8); AAC 335-14-8-.02(5)(b)(8)]

The EDS units addressed in this permit modification application were designed and will be operated in a manner that reduces the risk of environmental contamination. The materials of construction for the EDS equipment are compatible with the chemical fills to be treated, treatment reagents used, and decontamination solutions. Each EDS unit is on a trailer equipped with a secondary containment pan; all drums are on spill containment pans in the event of a release. As an added protection, an impermeable flooring in the enclosure will consist of a liner type material constructed of polypropylene or polyethylene. The EDS unit and flooring are located within an Environmental Enclosure (see **Figure D-1-8**).

The ground surrounding the Environmental Enclosures for the EDS units will be graded to direct the flow of liquids away from the structure. These design features will protect the EDS units from precipitation run-on and minimize the potential for contaminated runoff. See **Attachment D-1** for a description of the enclosures.

Work areas will be monitored for the appropriate chemical vapors, depending on the type of chemical fill being treated. Workspace air will be vented to an Environmental Enclosure AFS. The AFS carbon will be activated or sulfur-impregnated, depending on the chemical fill to be treated. Fire safety equipment

designed for chemical and electrical fires will be staged in the support areas and other support will be provided by the RSA fire department, as necessary.

D-1a(4) Operating Standards

When operating an EDS unit, operations personnel will follow approved procedures designed to reduce the risk of chemical exposure to human health or the environment. These operating procedures will ensure the following:

- Operators will be trained in the function and operations of the EDS and associated equipment.
- EDS treatment operations will be conducted remotely; no personnel will be present inside the Environmental Enclosure during detonations.
- Operations will be observed and recorded through the use of closed-circuit televisions.
- Personnel operating the EDS equipment will wear appropriate PPE.
- Routine inspections of the EDS processing areas and equipment will be conducted as indicated in **Table F-2-1** and **Attachment F-1** of this permit modification application.
- Preventive maintenance will be performed at regular intervals.

D-1b Inspection and Closure

D-1b(1) Inspection [40 CFR 270.14(b)(5); AAC 335-14-8-.02(5)(b)5 and 335-14-5-.09(5)]

Inspection schedule and requirements for the EDS units are provided in **Section F-2**, Inspection Schedule. Example inspection log sheets for the units are provided in **Attachment F-1**.

D-1b(2) Closure [40 CFR 270.14(b)(13); AAC 335-14-5-.09(9)]

Closure of the EDS units is described in **Section I**, Closure Plan, of this permit modification application.

D-1c Monitoring, Analysis, Inspection, and Response [40 CFR 270.14(b)(8); AAC 335-14-8-.02(5)(b)(8)]

Monitoring will be conducted at the RSA-EDS site for worker safety and environmental protection. The monitoring systems will consist of MINICAMS®, Depot Area Air Monitoring System (DAAMS), and other instrumentation that is described in **Attachment F-3** of this permit modification application. **Attachment F-3** provides a description of the monitoring, including a general description of each monitoring device, theory of operation, and sensitivity and response time.

The monitoring devices will be inspected as detailed in **Section F-2** of this permit modification application.

Operators will keep a log of events that occur during a work shift. These events include activities preceding, during, and following the destruction of recovered munitions or items, any near real-time (NRT) monitoring alarms, and historical monitoring confirmations. Operating checklists and datasheets will enable operators to review historical analysis and records.

D-1d Compliance with RCRA Organic Air Emissions [40 CFR 264 Subparts AA, BB, CC; AAC 335-14-5-.27, 335-14-5-.28, and 335-14-5-.29]

The strategy to comply with the RCRA organic air emissions is discussed in **Attachment D-3**.

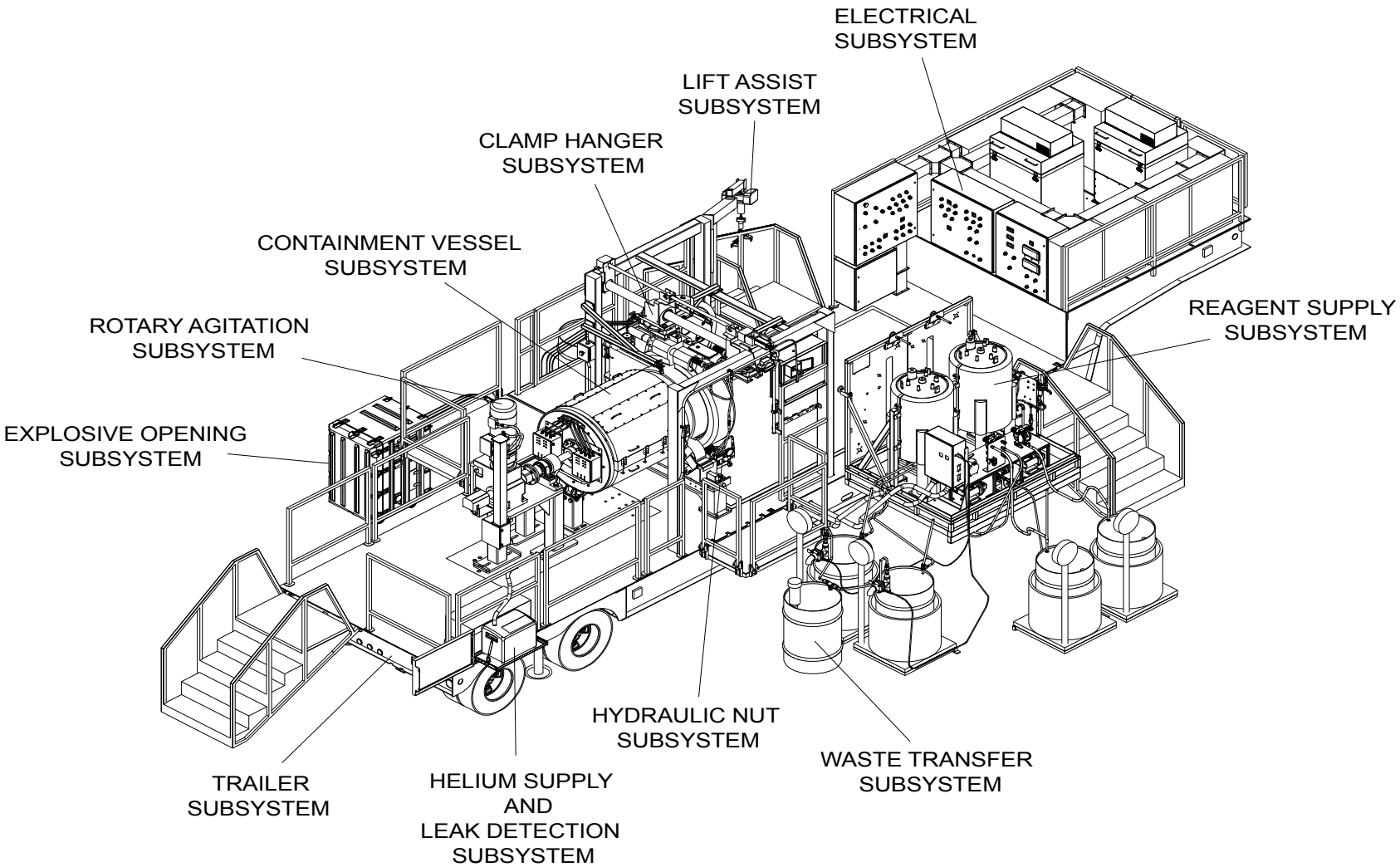

Figure D-1-1. Major Components of EDS Phase 2 Unit

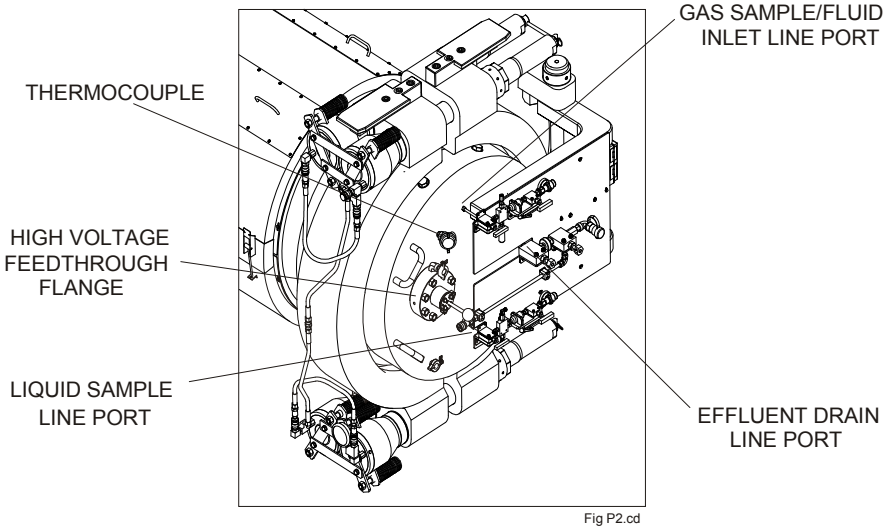

Figure D-1-2. EDS Phase 2 Containment Vessel Door

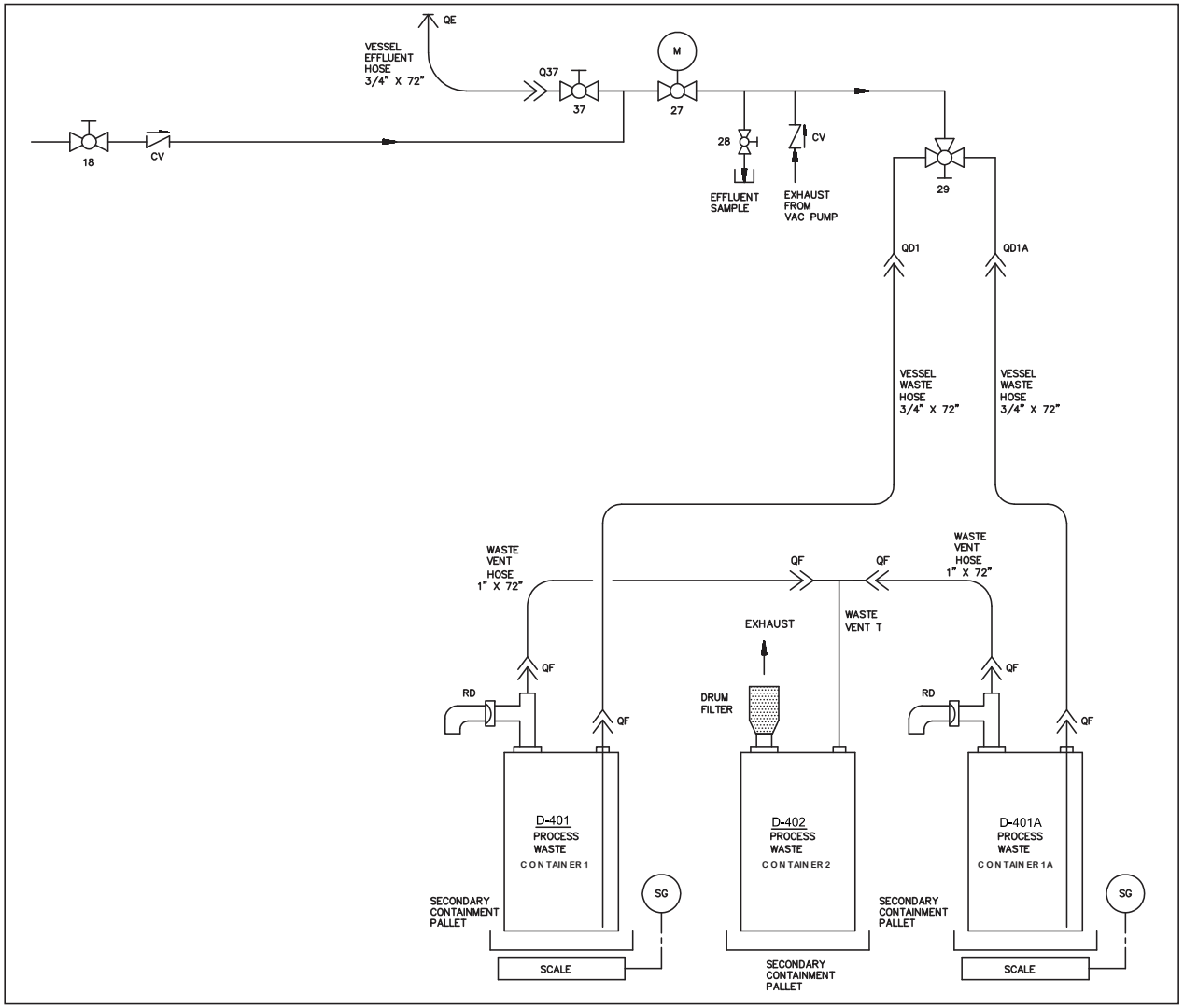

V-0019-020; Vessel Waste.cdr
7/8/14

Figure D-1-3. Containment Vessel Waste Transfer

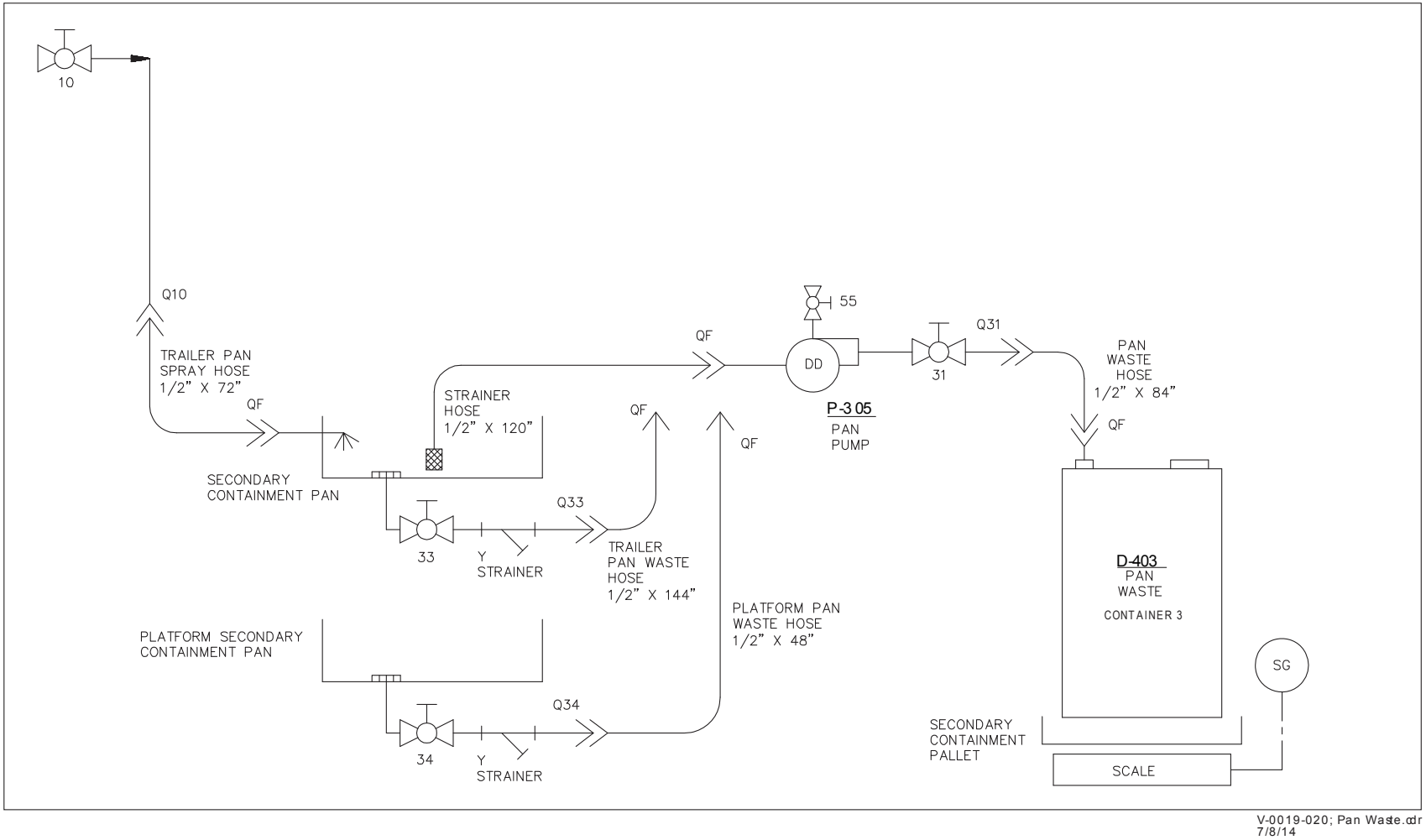

Figure D-1-4. Secondary Containment Pan Waste Transfer

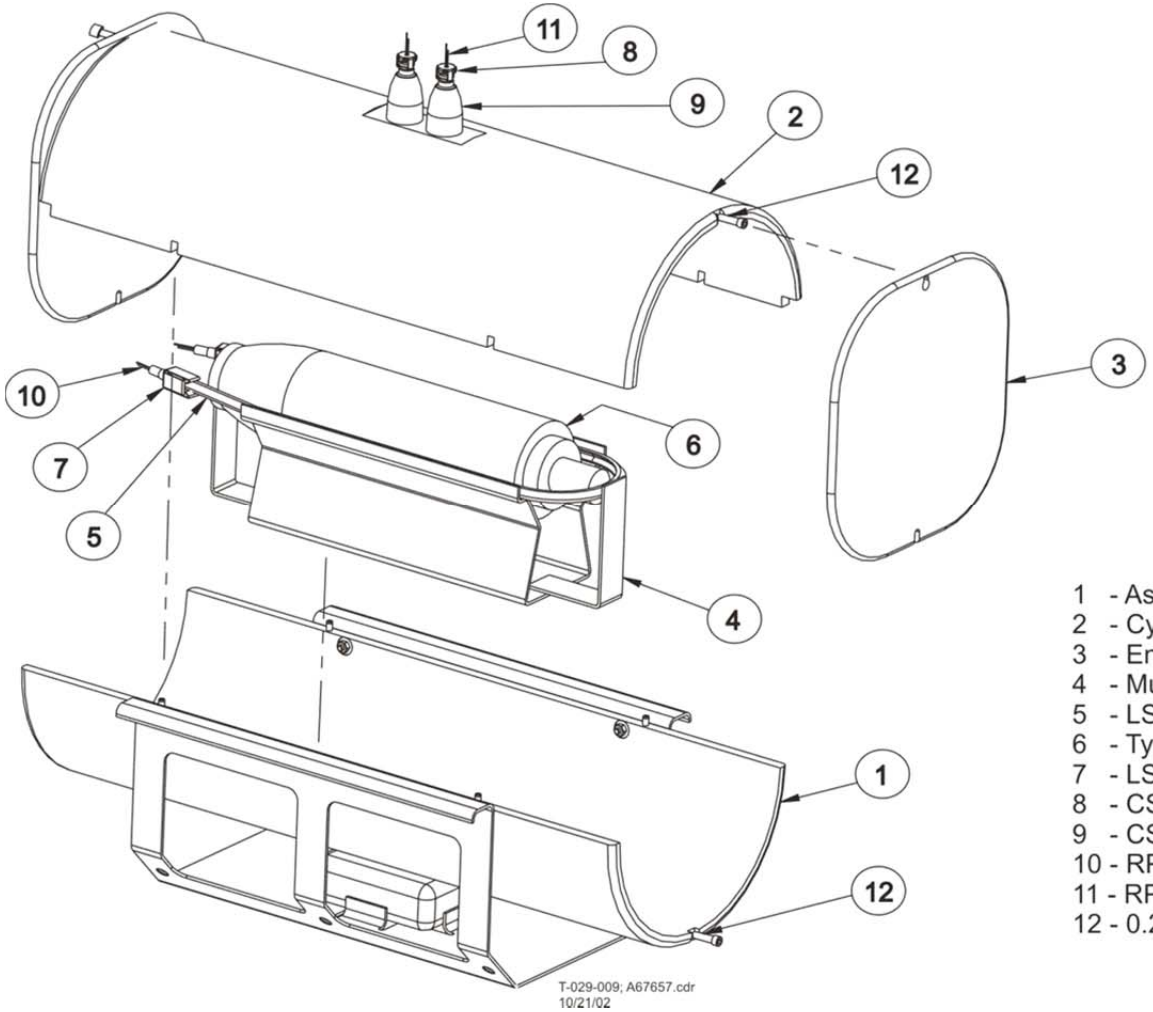

1 - Assembly, 12" Frame/Cylinder Bottom
2 - Cylinder Top, 12"
3 - End Plate, 12"
4 - Munition Holder, Typical Munition
5 - LSC, Typical Munition
6 - Typical Munition
7 - LSC Detonator Clip
8 - CSC Detonator Clip
9 - CSC
10 - RP-1 EBW Detonator
11 - RP-2 EBW Detonator
12 - 0.25-20 UNC X 1.25 LG SOC HD CAP SCR

Figure D-1-5. Typical Munition FSS

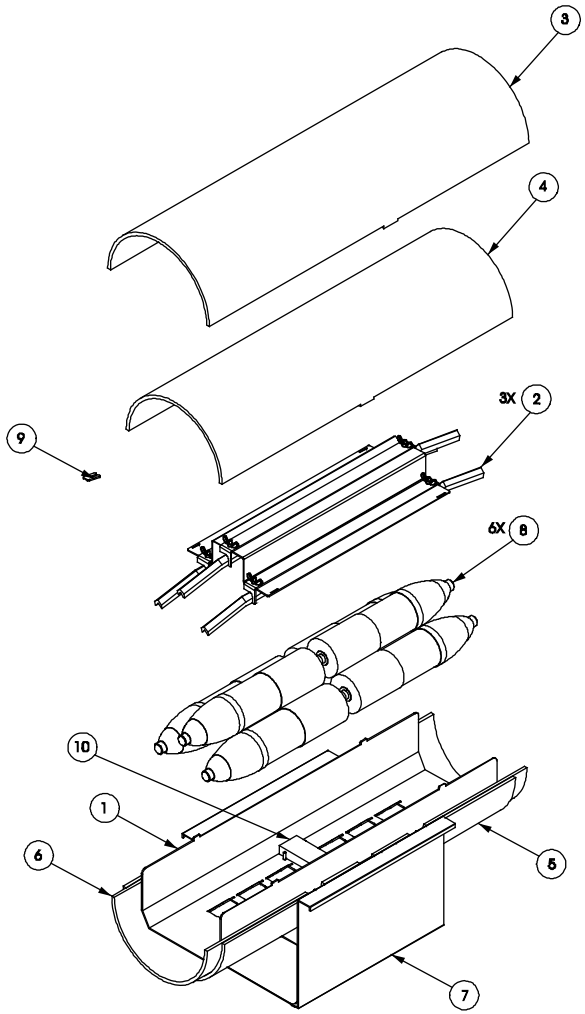

1 - 4.2 Multiple Holder Assembly
2 - 4.2 Multiple 1200G LSC
3 - Outer Cylinder Top
4 - Inner Cylinder Top
5 - Outer Cylinder Bottom
6 - Inner Cylinder Bottom
7 - FSS Frame
8 - 4.2-inch Mortar
9 - LSC Shim
10 - Stopper Block

P-0076-004; Multiple Assy.ai
2/18/08

Figure D-1-6. 6-Round 4.2-Inch Mortar Multiple Munition FSS

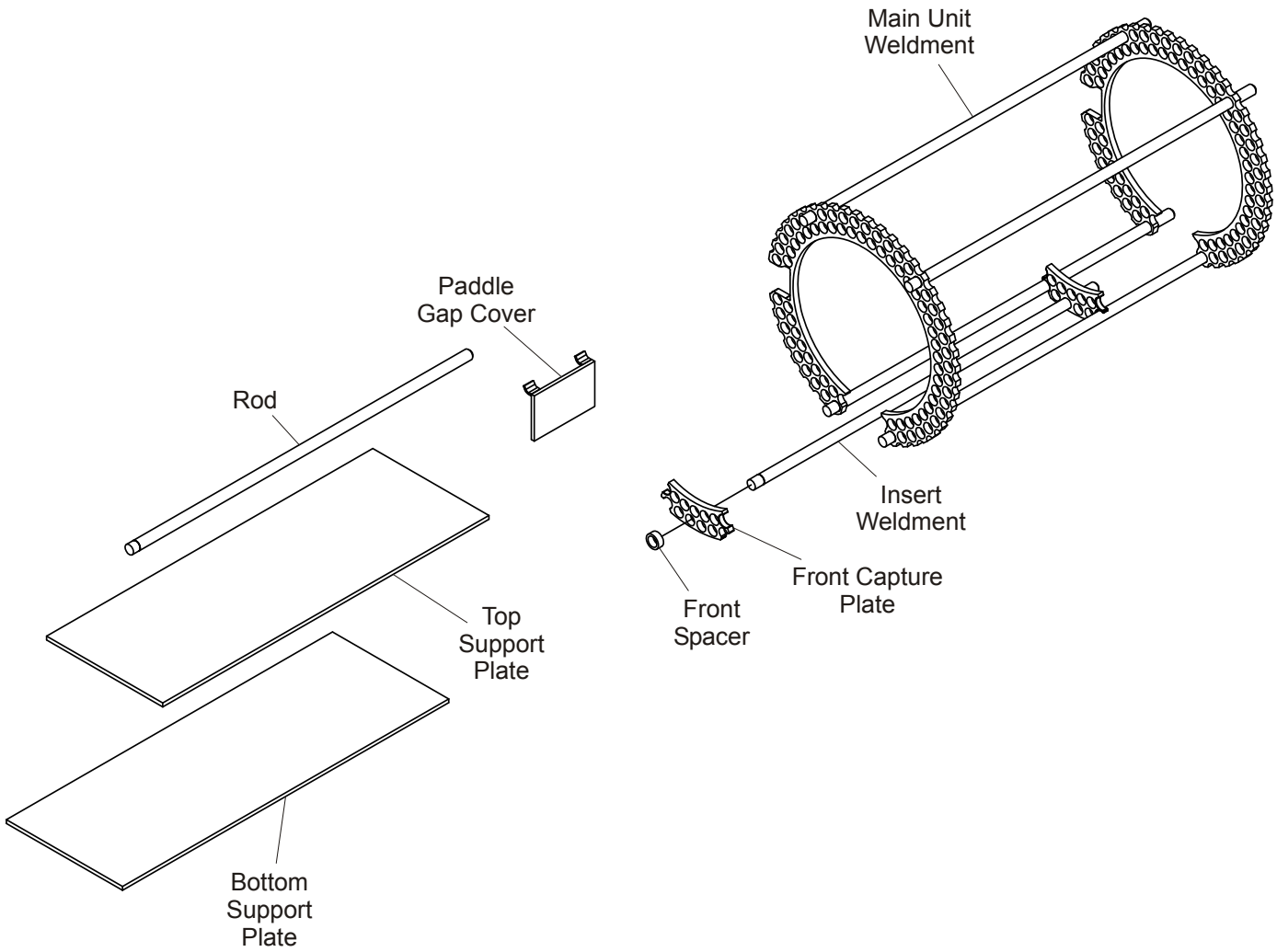

Figure D-1-7. Advanced Fragment Suppression System

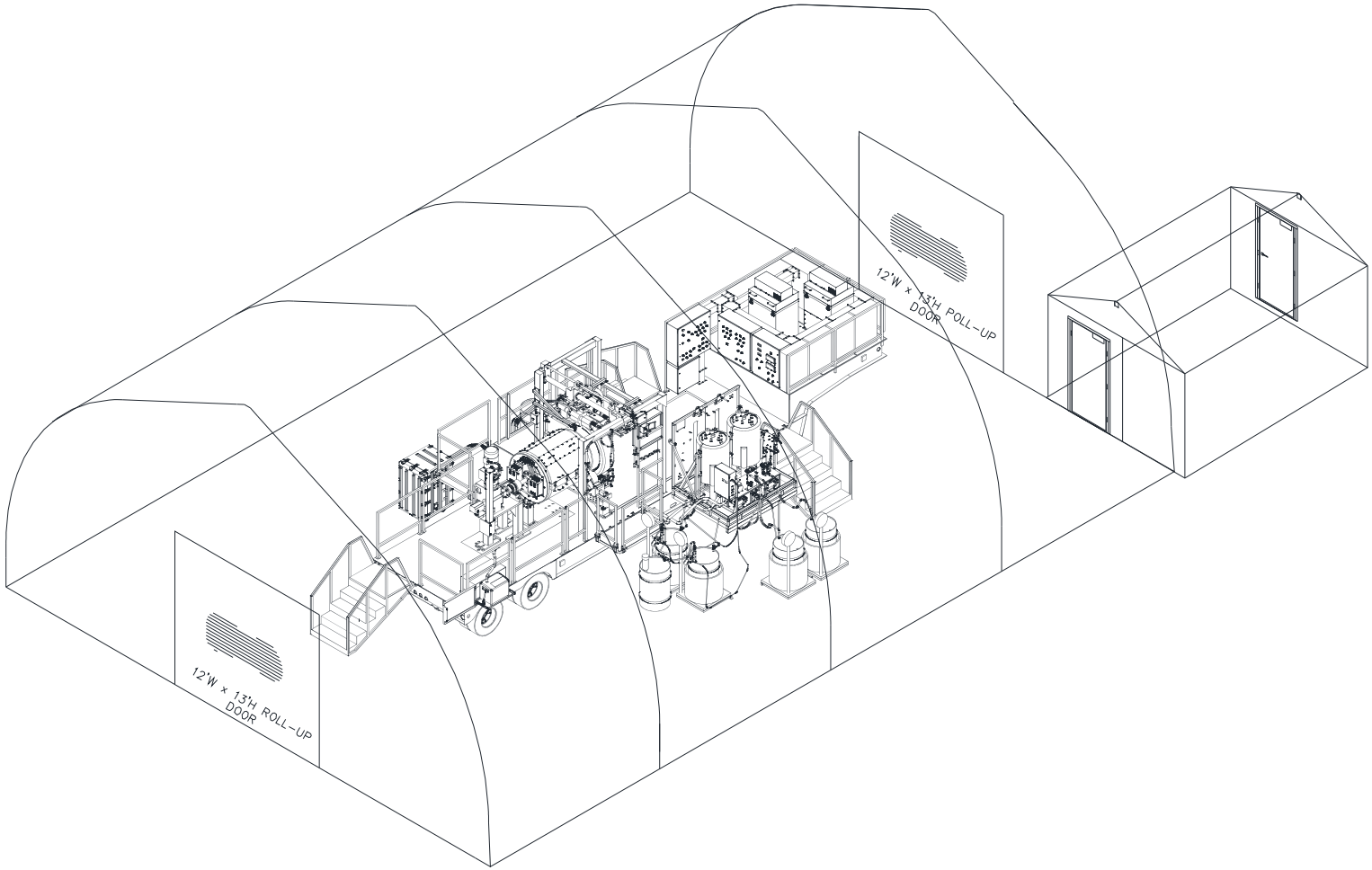

Figure D-1-8. Example of an EDS Within an Environmental Enclosure

Table D-1-1. EDS Phase 2 Unit Physical Characteristics Summary

Component	Phase 2 Unit
Trailer Subsystem	
Gross Weight of Trailer	Approximately 57,300 pounds
Dimensions of Trailer	39.5 feet long x 8.5 feet perimeter frame dual-axle, single-drop trailer with a fold-up wing
Dimensions of Trailer Pan	154.75 inches long x 69 inches wide by 2.34-5.00 inches deep (approximately 166 gallons)
Working Surface of the Trailer	Approximately 36.5 inches above the ground
Leveling Jacks	Four leveling jacks
Access to trailer	Three fold-down steps on each side midway to the front and at the rear of the trailer
Safety Railings	4.5-foot high safety railing surrounds the trailer
Additional Feature	Four fold-down platform extensions for additional work area and accessibility
Containment Vessel Subsystem (Measurements are approximate.)	
Outside Length	63 inches
Outside Diameter	36.5 inches
Inside Length	56 inches
Inside Diameter	29 inches
Side Wall Thickness	3.655 inches
Rear Wall Thickness	6.565 inches
Assembly Weight	18,000 pounds
Design Volume	22 cubic feet (160 gallons)
Working Volume	112 gallons
Maximum Explosive Rating[a]	4.8 pounds TNT equivalent
Munition Size Capacity	
Maximum Diameter	10 inches
Maximum Length	40 inches
Chemical Fill Capacity	50 pounds or less

Table D-1-1. EDS Phase 2 Unit Physical Characteristics Summary (Continued)

Component	Phase 2 Unit
Containment Vessel Subsystem (continued)	
Maximum Munitions Load Number of Paddles Protection Plates Access Door to the Interior of the Containment Vessel External Heater	Supports 1 to 6 munitions per detonation Two welded inline T-shaped paddles to aid in agitation, each 19 inches long x 4 inches wide x 3-1/16 inches tall Four stainless steel blast protection plates A 9-inch thick door provides access to the interior of the Containment Vessel Six 7.5-kW, 480-volt band heaters
Clamp Hanger Subsystem	Two sets of clamp hangers with proximity sensors, two drive-pin assemblies and a lead screw
Hydraulic Nut Subsystem	Two Grayloc® clamp halves attached to four threaded steel rods with hydraulic nuts
Lift Assist Subsystem	Lift Assist: Comprised of articulated arm jib crane with a computer controlled electric winch Approximate Weight: 135 pounds Articulated Arm Jib Crane Dimensions: Approximately 8 feet long boom (fully extended) and 8.5 feet high above the working deck Construction: Mild steel painted with epoxy paint Lifting Capacity: 220 pounds
Rotary Agitation Subsystem	Rotates 360° at 1 rpm for 15 rotations and then reverses for the same time and revolutions 3-hp, 480-volt, 3-phase motor
Reagent Supply Subsystem	
Supply Tanks Pumps	Two 65-gallon supply tanks with heaters; one tank holds water while the other tank holds reagent Two air-driven pumps rated at 2 gpm
Dimensions of Secondary Pan	72.34 inches long x 58.69 inches wide x 5.821 inches deep (approximately 107 gallons)
Waste Transfer Subsystem	Consists of four waste containers: Containers 1 and 1A will be used to collect liquids from the Containment Vessel; Container 2 will be used to capture vapors from Containers 1 and 1A. Container 3 will be used for any liquids from the secondary containment pans/sumps. Each waste container is provided with secondary spill containment.
Electrical Subsystem	Two 480-volt distribution panels and two 120-volt distribution panels for the trailers and their subsystem

Table D-1-1. EDS Phase 2 Unit Physical Characteristics Summary (Continued)

Component	Phase 2 Unit
Explosive Opening Subsystem	Two separate firing systems capable of being positioned 50 feet from the trailer. Control module can be moved up to 300 feet from the firing system panel for remote operation.
Helium Supply and Leak Detection Subsystem	Mounted on trailer
Dimensions of Debris Pan	Approximately 52 inches long x 30 inches wide x 11.5 inches deep (approximately 50 gallons)

Reference: Table compiled from information contained in the Project Manager for Non-Stockpile Chemical Materiel *Operations and Maintenance Manual for Explosive Destruction System Phase 1 Unit 2 Series*, current version, and *Operations and Maintenance Manual for Explosive Destruction System Phase 2 Series*, current revision.

Notes:

[a] Total net explosive weight including donor charges

gpm = gallons per minute
hp = horsepower
kW = kilowatt
rpm = revolutions per minute
TNT = trinitrotoluene
VAC = volts alternating current

Table D-1-2. Fragment Suppression System Characteristics

Fragment Suppression System[a]	Length (in.)	Width (in.)	Height (in.)	Weight (lbs.)
75mm Shell FSS	24.75	15	14.38	130
4.2-inch Mortar FSS	24.75	15	14.38	130
Livens Projectile FSS	24.75	15	14.38	130
M139 Bomblet FSS	30.75	15	14.38	165
155mm Projectile FSS	36	19	18.375	456
8-inch Projectile FSS	36	18.375	19	300
3-Round 75mm Shell MMFSS	30	14.25	14.875	329
3-Round 4.2-inch Mortar MMFSS	30	14.25	14.875	304
6-Round 75mm Shell MMFSS	44	17.63	19.55	502
6-Round 4.2-inch Mortar MMFSS	44	17.63	19.55	452
Single Round Full-Length GTR FSS	42	19.46	19.11	519
3-Round Full-Length GTR MMFSS	42	19.46	19.11	529
6-Round GTR MMFSS	42	19.46	19.11	348

Notes:

[a] Weights and dimensions are an assembled FSS configuration, without munitions.

FSS = Fragment Suppression System
GTR = German Traktor Rocket
in = inches
lbs. = pounds
MMFSS = Multiple Munition Fragment Suppression System

Table D-1-3. Advanced Fragment Suppression System Characteristics Summary

Component	Characteristics
Rods	1.25 inches diameter x 52.9 inches long; cold drawn steel
Support Plates	0.12 inches thick x 19.5 inches or 17.5 inches wide x 44 inches long; mild steel
Paddle Gap Cover	0.5 inches thick x 7 inches wide x 10 inches long; hot roll steel
Front Spacer	1.88 inches outside diameter x 1.35 inches inside diameter x 0.775 inches long; cold drawn steel
Front Capture Plate	0.75 inches thick x 28.75 inches diameter; hot roll steel
Insert Weldment	0.75 inches thick x 28.75 inches diameter with 1.25-inch diameter x 52.9 inches long rods
Main Unit Weldment	28.75 inches outside diameter x 21 inches inside diameter x 52.9 inches long
AFSS Weight	1,660 lbs

Note:

AFSS = Advanced Fragment Suppression System

(This page intentionally left blank.)

D-2 TANK SYSTEMS [40 CFR 270.16 and 264 Subpart J; AAC 335-14-8-.02(7) and 335-14-5-.10]

There will be no hazardous waste tank systems located at the RSA-EDS site; therefore, this section is not applicable.

D-3 SURFACE IMPOUNDMENTS [40 CFR 270.17 and 264 Subpart K; AAC 335-14-8-.02(8) and 335-14-5-.11]

There will be no surface impoundments at the RSA-EDS site; therefore, this section is not applicable.

D-4 WASTE PILES [40 CFR 270.18 and 264 Subpart L; AAC 335-14-8-.02(9) and 335-14-5-.12]

There will be no waste piles at the RSA-EDS site; therefore, this section is not applicable.

D-5 INCINERATORS, BOILERS, OR INDUSTRIAL FURNACES [40 CFR 270.19, 270.22, and 264 Subpart O; AAC 335-14-8-.02(10), 335-14-8-.02(13), and 335-14-5-.15]

There will be no incinerators, boilers, or industrial furnaces at the RSA-EDS site; therefore, this section is not applicable.

D-6 LAND TREATMENT [40 CFR 270.20 and 264 Subpart M; AAC 335-14-8-.02(11) and 335-14-5-.13]

Land treatment will not be conducted at the RSA-EDS site; therefore, this section is not applicable.

D-7 LANDFILLS [40 CFR 270.21 and 264 Subpart N; AAC 335-14-8-.02(12) and 335-14-5-.14]

The RSA-EDS site will not have a landfill; therefore, this section is not applicable.

D-8 DRIP PADS [40 CFR 270.26 and 264 Subpart W; AAC 335-14-8-.02(17) and 335-14-5-.23]

The RSA-EDS site will not have drip pads; therefore, this section is not applicable.

D-9 PROCESS VENTS [40 CFR 270.24; AAC 335-14-8-.02(15)]

The RSA-EDS site will not have process vents; therefore, this section is not applicable.

D-10 MISCELLANEOUS TREATMENT UNITS [40 CFR 270.23 and 264 Subpart X; AAC 335-14-8-.02(14) and 335-14-5-.24)]

The RSA-EDS site will not have miscellaneous treatment units; therefore, this section is not applicable.

ATTACHMENT D-1

RSA-EDS SITE SUPPORT EQUIPMENT

(This page intentionally left blank.)

ATTACHMENT D-1
RSA-EDS AND SITE SUPPORT EQUIPMENT

1.0 SITE SUPPORT EQUIPMENT

1.1 Bulk Chemical Storage

Chemicals that may be required for the Redstone Arsenal Explosive Destruction System (RSA-EDS) site operation include monoethanolamine (MEA), sodium hydroxide (NaOH), sodium permanganate ($NaMnO_4$), and propylene glycol. These chemicals, as well as others, will be delivered on an as needed basis and stored onsite.

1.2 Water Supply and Distribution System

Potable water will be used for process water via a supply line and will be supplied by Redstone Arsenal (RSA) to the RSA-EDS site.

1.3 Power Generators

The primary power source will be shore power provided by RSA. A backup diesel-powered generator will be used as the power supply for critical systems should the primary power fail.

1.4 Utility Support Trailer

The RSA-EDS site will include a Utility Support Trailer consisting of a 5-ton Cargo Sport Trailer with 11,000-pound capacity, a 5-kilowatt (kW) portable generator, a workbench, and storage for tools and spare parts.

1.5 Air Compressors

The RSA-EDS site will have separate air compressors; one will supply air to power the transfer pumps that pump liquids into the Explosive Destruction System (EDS) Containment Vessel and any liquid wastes out of the EDS trailer secondary containment pan; and the other will be used to provide breathing air.

2.0 ENVIRONMENTAL ENCLOSURE AND SUPPORT SYSTEMS

Each EDS Environmental Enclosure and support systems will be comprised of the following:

- Enclosure structure
- Air Filtration System (AFS)
- Utility systems, including electrical distribution, lighting, water, station air, air conditioning (including heating as applicable), and breathing air.

2.1 Enclosure Structure

Each EDS unit will be placed inside an Environmental Enclosure that provides weather protection and interior environmental control for worker comfort and safety. Each enclosure will have an AFS that contains a carbon filter system to maintain a negative pressure within the structure relative to the outside air and to capture any vapors that may result from a release while a chemical item is being prepared for placement inside the EDS Containment Vessel.

The main span of an enclosure will house the EDS unit and provide sufficient additional space for equipment storage and movement without interfering with treatment operations. An unpack area and a Personnel Decontamination Station will be provided.

To prevent any spills or leaks from reaching soil, groundwater, or surface water, the EDS and Environmental Enclosure will be placed on an impervious surface large enough to cover the surface area of the Environmental Enclosure, Personnel Decontamination Station, and Unpack Area.

Spill containment pans or portable berm areas will be placed underneath any equipment, liquid waste containers, and work areas that have a potential to leak or spill liquids. All secondary containment will exceed the volume of liquids contained within.

The Environmental Enclosures will be one of two types described below. No matter which type of enclosure is used, it will be equipped with doors for entrance and egress and will be connected to at least one AFS that consists of pre-filters, high efficiency particulate air (HEPA) filters, and carbon filters along with an agent monitoring system, fan, and ductwork.

General Purpose Operations Shelter (GPOS)

The GPOS is a tent-like, all-weather, mobile shelter consisting of a series of arched rigid ribs and tentage. The GPOS is a commercially available structure that meets the following codes:

- *System Requirements Document for the Explosive Destruction System*, U.S. Army Program Manager for Chemical Demilitarization, Product Manager for Non-Stockpile Chemical Materiel, Revision 2, March 2003.

- MIL-STD-1472 – *Human Engineering Design Criteria for Military Systems, Equipment, and Facilities*.

- National Electrical Code (NEC), National Fire Protection Association.

Vapor Containment Structure (VCS)

The VCS is a fully-enclosed pre-engineered steel building consisting of a series of arched aluminum ribs integrally connected by modular architectural membrane panels.

The VCS meets the following codes:

- National Fire Protection Association (NFPA) 701, *Fire Tests for Flame Resistant Textiles and Film*

- Uniform Building Code (UBC) 31-1, *Flame Retardant Membranes*

- Underwriters Laboratory (UL)-214, *Tests for Flame-Propagation of Fabrics and Films*

- American Society for Testing and Materials (ASTM)-E84, *Standard Test Method for Surface Burning Characteristics of Building Materials*.

2.2 Environmental Enclosure AFS

The AFS minimizes the potential for airborne contaminants released from operating the EDS units.

The AFS contains a modulating flow control damper, a filter housing containing a prefilter, HEPA filter, two high-efficiency gas adsorber (HEGA) filter banks in series, another HEPA filter, and an exhaust fan powered by a motor. The exhaust fan, in conjunction with the modulating damper, maintains a constant flow rate through the carbon filter unit. The filter unit draws air from the Environmental Enclosure. The Environmental Enclosure can be maintained at negative pressure relative to the atmosphere by manually throttling the air intake damper. The carbon filter unit discharges to the environment.

The prefilter is designed to remove large particulate matter from the air stream prior to reaching the downstream HEPA filter. The upstream HEPA filter protects the HEGA filters from particulate matter and the downstream HEPA traps any carbon fines that escape from the HEGA filters. Negative pressure within the Environmental Enclosure is measured using a Magnehelic® differential pressure sensor within each filter. The sensor provides a readout and alarms to alert operators in the event the negative pressure deviates from normal acceptable range. Since the differential pressure will vary with site setup and atmospheric conditions, acceptable ranges for each filter are established after the Environmental Enclosure and AFS are installed and operational. The site-specific acceptable ranges and the current day pressure readings are displayed on a Pre-operations Checklist that must be signed by the Edgewood Chemical Biological Center (ECBC) Crew Chief and the Recovered Chemical Materiel Directorate (RCMD) Site Manager before any operations can begin. These checklists are available onsite for inspection. The carbon bed control efficiency exceeds 99.9 percent for chemical agent.

Each HEGA filter bank contains nine ASME AG-1 Type II adsorber cells. Each cell has a bed depth of 16 or 18 inches of activated carbon or sulfur-impregnated charcoal, depending on the chemical fill to be treated. The HEGA filters are replaced when carbon filter performance deteriorates to the point where chemical agent breakthrough of the carbon bed occurs. This is indicated by a confirmed MINICAMS® alarm at 70 percent of the vapor screening level (VSL)/short-term exposure limit (STEL) (0.021 milligram per cubic meter [mg/m^3]) in the midbed monitoring location of the AFS. In the event of an alarm at this location, the MINICAMS monitoring the filter is switched to monitor the stack locations of the filter system. Confirmation Depot Area Air Monitoring System (DAAMS) tubes are collected from the alarm location and analyzed to validate the alarm. If the alarm is confirmed, the operation is brought to a safe shutdown state. The HEGA filters located upstream of the midbed are removed and replaced by the HEGA filters located downstream of the midbed and new HEGA filters are installed in the downstream bed. The prefilter and HEPA filter will also be replaced. Upon completion, all filters will be leak checked and monitoring capabilities restored before operations resume.

All filters (prefilter, HEPA, HEGA) are of the bag in/bag out type, which allows filters to be replaced from the exterior of the filter housing without exposing personnel to the contents of the spent filters. Plastic bags surrounding the access openings encapsulate the filters prior to removal.

2.3 Utility Systems Including Lighting, Water, Station and Instrument Air, and Breathing Air

Overhead lighting will be provided throughout each Environmental Enclosure. Water from a potable water supply line will be provided for processing, eyewash stations, and decontamination. Station and instrument air will be available for operation of air-operated process equipment and maintenance tools. Breathing air for emergency operations will be provided from a cascading air system.

2.4 Miscellaneous Structures, Equipment, and Areas

Monitoring Module

Monitoring equipment will be housed in a module for each EDS unit at the RSA-EDS site. Sampling lines from the monitoring equipment will be installed to each sampling point for each EDS unit. All critical near real-time (NRT) monitoring equipment will be connected to an uninterruptible power supply.

Command Post

An operational Command Post will be located at the RSA-EDS site and will be equipped with the necessary computers and communications equipment to assist with the control of operations and collection of data for operations.

Explosive Storage Magazine

An explosive storage magazine may be located at the RSA-EDS site. Explosives used to access the munitions during EDS operations at the RSA-EDS site will be stored in service magazines in accordance with Department of the Army policy. Explosives will be transferred to each EDS unit as needed.

Personnel Decontamination Stations

A Personnel Decontamination Station for each EDS unit will be set up at each Environmental Enclosure in accordance with the site-specific Health and Safety Plan for personnel to decontaminate personal protective equipment (PPE) and equipment when leaving the exclusion zone of each operation.

PPE Change Area

Facilities will be provided for personnel to don PPE after passing through the Personnel Decontamination Station.

Break Room/Crew Trailer

A break room area/trailer will be provided at the RSA-EDS site for personnel.

Toilet Facilities

Toilets will be available onsite for site personnel.

Support Conex/Storage Facility

The RSA-EDS site will have a box structure (Conex) that allows for EDS equipment to be transported and provides equipment storage during operations. There will also be a general storage facility where treatment chemicals and larger equipment items can be stored.

Loading Area

A loading area will be established at the entrance of each Environmental Enclosure where supplies, items to be processed, and waste containers will be loaded and unloaded.

Utility Trailer

The utility trailer provides storage for small equipment, consumable supplies, and a work area to perform equipment maintenance.

Mobile Analytical Platform

A mobile analytical platform will be set up at the RSA-EDS site to provide onsite chemical agent analysis services for air and liquid samples.

(This page intentionally left blank.)

ATTACHMENT D-2
EDS PHASE 2 UNIT TRAILER CONTAINMENT PAN
SECONDARY CONTAINMENT CALCULATIONS

(This page intentionally left blank.)

CALCULATION COVER SHEET

Calculation Number: V-0019-001
Revision Number: 0
Page 1 of 3

Title: Explosive Destruction System Phase 2 Trailer Secondary Containment Pan Capacity

Project Identification Number: V-0019

Key Words:

Charge Number: 212882.00.003.0019.500

Purpose: The purpose of this calculation is to demonstrate that the secondary containment pan located on the Explosive Destruction System (EDS) Trailer contains sufficient capacity to collect all liquids resulting from a spill, leak or release from the EDS Phase 2 Containment Vessel.

Summary of Results:

The calculated secondary containment capacity is 169.64 gallons. The required containment capacity must be 100 percent of the volume of the largest container (EDS Containment Vessel, 160 gallons) or 10 percent of the total volume stored (16 gallons), whichever is greater. In this case, the required containment capacity is 160 gallons. Therefore the trailer secondary containment pan has adequate capacity to provide secondary containment for the EDS Containment Vessel in the event of a leak, spill or release.

Name (print or type):	Signature:	Date:
Originator(s):		
Frank Giordan		6 Nov 2015
Reviewed by:		
Sanjay Sarraiya		6 Nov 2015
DM/Responsible Manager:		
Jeffrey L. Blevins		06 NOV 2015

SP 4-2, Rev. 4

CALCULATION SHEET

Calculation Number: V-0019-001
Revision Number: 0
Page 2 of 3

The EDS Trailer **Secondary Containment Pan** will provide secondary containment for the EDS Containment Vessel.

The containment pan will be used to collect any liquids that may result from a spill, leak or release from the EDS Phase 2 Containment Vessel.

As the EDS is classified as a container, the secondary containment requirements for hazardous waste container storage areas are presented to show adequate containment capacity. For container storage areas, the required capacity of the secondary containment is 100 percent of the largest container or 10 percent of the total volume stored, whichever is greater.

Design volume of the EDS Containment Vessel is 160 gallons.

NOT TO SCALE

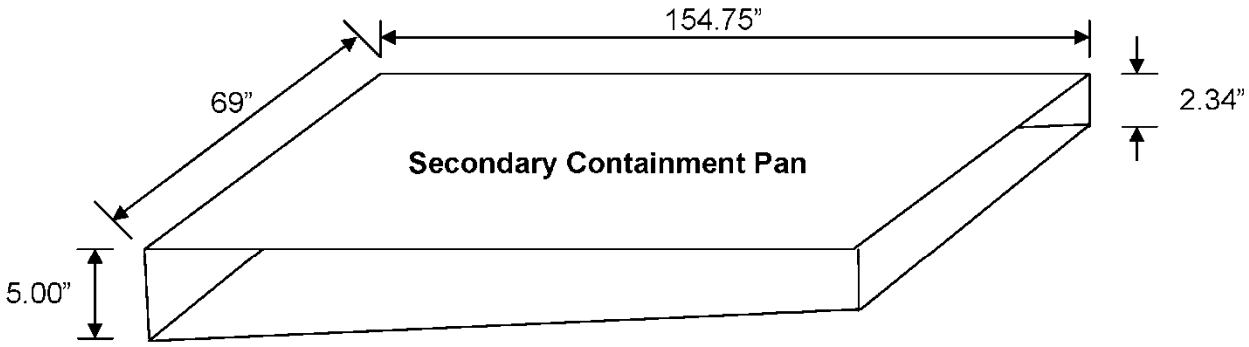

Inside Dimensions:

Length	154.75 inches
Width	69 inches
Depth	2.34 – 5.00 inches

SP 4-2, Rev. 4

Calculation Number: V-0019-001
Revision Number: 0
Page 3 of 3

The **secondary containment pan** capacity volume is calculated as follows:

Volume of pan	=	volume of rectangular portion of pan + volume of sloped portion of pan		
Volume of rectangle	=	154.75" x 69" x 2.34"	=	24,985.94 inches^3
			=	14.46 feet^3
			=	108.16 gallons
Volume of sloped	=	$\frac{154.75" \times 69" \times (5-2.34)"}{2}$	=	14,201.41 inches^3
			=	8.22 feet^3
			=	61.48 gallons
Volume of pan	=	108.16 + 61.48	=	**169.64 gallons**

The calculated secondary containment capacity is 169.64 gallons. The required containment capacity must be 100 percent of the volume of the largest container (EDS Containment Vessel, 160 gallons) or 10 percent of the total volume stored (16 gallons), whichever is greater. In this case, the required containment capacity is 160 gallons. Therefore the trailer secondary containment pan has adequate capacity to provide secondary containment for the EDS Containment Vessel.

(This page intentionally left blank.)

ATTACHMENT D-3

SUBPARTS BB AND CC COMPLIANCE STRATEGY

(This page intentionally left blank.)

ATTACHMENT D-3
SUBPARTS BB AND CC COMPLIANCE STRATEGY

1.0 GENERAL

This Plan describes how Redstone Arsenal Explosive Destruction System (RSA-EDS) site operations will comply with the air emissions requirements of the Resource Conservation and Recovery Act (RCRA) 40 CFR 264 Subparts AA, BB, and CC and the Alabama Department of Environmental Management (ADEM) Administrative Code (AAC) 335-14-5-.27, 335-14-5-.28, and 335-14-5-.29 (Subparts AA, BB, and CC). The Subpart AA, BB, and CC regulations control air emissions from certain process vents and equipment leaks, as well as air emissions from certain tanks, containers, and surface impoundments. The purpose of the RCRA organic air emission standards is to control air emissions from hazardous waste treatment, storage, and disposal units as necessary to protect human health and the environment. Subpart AA requirements are not applicable because the Explosive Destruction System (EDS) units do not contain any process vents associated with distillation, fractionation, thin film evaporations, solvent extraction, or steam stripping.

2.0 PURPOSE

This document focuses on the applicability of Subparts BB and CC for the EDS units. Compliance strategies in this plan apply to the reduction of organic air emissions from EDS equipment that contains or contacts hazardous waste of at least 10 percent organic content and to the management of EDS containers, such as the Containment Vessel and Waste Transfer Subsystem containers, that receive hazardous waste with an average volatile organic concentration at the point of origin of greater than or equal to 500 parts per million by weight (ppmw).

Section 3 describes the applicability and specific compliance with Subpart BB regulations for EDS equipment leaks. **Section 4** describes the applicability and specific compliance with Subpart CC regulations for the EDS units and the RSA-EDS site less than 90-day hazardous waste storage area containers. Each section provides information on compliance methods, inspection and monitoring, and recordkeeping.

Alabama adopted the provisions of 40 CFR 264 Subparts AA, BB, and CC in their entirety. Therefore, federal citations are provided in this compliance plan.

3.0 APPLICABILITY OF AAC 335-14-5-.28 SUBPART BB – AIR EMISSIONS STANDARDS FOR EQUIPMENT LEAKS [AAC 335-14-5-.28; 40 CFR 264.1050]

The Subpart BB requirements apply to equipment[1] that contains or contacts hazardous waste of at least 10 percent organic content by weight and is managed in hazardous waste management units that are either:

- Subject to the permitting requirements of AAC 335-14-8; 40 CFR Part 270.
- A recycling unit that is located at a hazardous waste management facility that is otherwise subject to permitting.
- A less than 90-day accumulation unit exempt from permitting under AAC 335-14-3-.03(5); 40 CFR 262.34(a) and that is not a recycling unit under AAC 335-14-2-.01(6); 40 CFR 261.6.

Each EDS unit contains equipment as defined in 40 CFR 264.1052-1058, is subject to permitting, and will be used to manage hazardous wastes with an organic concentration of at least 10 percent by weight. Therefore, Subpart BB requirements are applicable to the EDS equipment.

The 10 percent by weight organic determination is based on generator knowledge of the hazardous waste to be managed in the EDS units. This determination meets the requirements specified in 40 CFR 264.1063(d)(3).

To comply with Subpart BB, affected equipment must be uniquely identified and a determination made as to whether the equipment is "in gas/vapor service," "in light liquid service," or "in heavy liquid service." For the EDS units, all affected equipment is uniquely identified and a service class assigned. Therefore, no waste analyses or sampling is planned for air emission waste determinations. All equipment contacting any hazardous waste for greater than 300 hours per year is subject to regulation.

[1] "Equipment" means each valve, pump, compressor, pressure relief valve, sampling connection system, open-ended valve or line, flange, or other connector, and any control devices or systems required by Subpart AA [AAC 335-14-5-.27(c)(2)].

The EDS Subpart BB equipment of concern is as follows:

- Valves located on the Containment Vessels and valves located in the Waste Transfer Subsystems (valves on process waste containers 1 and 1A) for each EDS unit

- Sample connection systems (in each EDS unit)

- Double diaphragm pan pumps located in each EDS trailer containment pan.

Table Attachment D-3-1 lists the EDS equipment items and method of compliance as required by 40 CFR 264.1064(b)(1), (g)(1), and (g)(6). The table also includes location, state (liquid or vapor), and percent by weight organics.

3.1 Subpart BB Exemptions

Subpart BB regulations contain two exemptions:

- *Exemption 1 [40 CFR 264.1050(e)]*. Equipment that is "in vacuum service" is exempt from applicable standards if the equipment is identified according to 40 CFR 264.1064(g)(5). "In vacuum service" means that the equipment is operating at an internal pressure that is at least 5 kilopascals (kPa) below ambient pressure. This exemption is not applicable because the EDS units operate at pressures greater than 5 kPa below ambient pressure.

- *Exemption 2 [40 CFR 264.1050(f)]*. Equipment that contains or contacts hazardous waste with an organic concentration of at least 10 percent by weight for less than 300 hours per calendar year is identified as required in 40 CFR 264.1064(g)(6). Seven valves were identified as operating in contact with hazardous waste for less than 300 hours per calendar year. These equipment items are identified in **Table Attachment D-3-1** as part of this Plan and by this Plan are identified and documented in the operating record in accordance with 40 CFR 264.1064(g)(6).

Table Attachment D-3-1. EDS Phase 2 Unit Equipment Items

Equipment ID[a]	Location	Equipment Type	Liquid or Vapor	Percent by Weight Organics	Compliance Method
19	Vapor Sample Line/Vessel Door	Valve	V	> 10%	Exempt, operates less than 300 hours per year [40 CFR 264.1050(f)]
20	Vapor Sample Line	Sample Connection System	V	> 10%	Closed-Loop System [meets [40 CFR 264.055(a) and 40 CFR 264.1055(b)(1)]
24	Liquid Sample Line/Vessel Door	Valve	L	> 10%	Exempt, operates less than 300 hours per year [40 CFR 264.1050(f)]
25	Liquid Sample Line/Vessel Door	Sample Connection System	L	> 10%	*In situ* sampling device, exempt [40 CFR 264.1055(c)]
21	Vessel Door	Valve	L/V	> 10%	Monitor during operations
22	Vessel Door	Valve	L/V	> 10%	Monitor during operations
23	Vessel Door	Valve	L/V	> 10%	Monitor during operations
26	Vessel Door	Valve	L/V	> 10%	Monitor during operations
27	Waste Transfer Subsystem	Valve	L	> 10%	Exempt, operates less than 300 hours per year [40 CFR 264.1050(f)]
28	Waste Transfer Subsystem	Valve	L	> 10%	Exempt, operates less than 300 hours per year [40 CFR 264.1050(f)]
29	Waste Transfer Subsystem	Valve	L	> 10%	Exempt, operates less than 300 hours per year [40 CFR 264.1050(f)]
31	Waste Transfer Subsystem	Valve	L	> 10%	Exempt, operates less than 300 hours per year [40 CFR 264.1050(f)]
33	Waste Transfer Subsystem	Valve	L	> 10%	Exempt, operates less than 300 hours per year [40 CFR 264.1050(f)]
34	Waste Transfer Subsystem	Valve	L	> 10%	Exempt, operates less than 300 hours per year [40 CFR 264.1050(f)]

Table Attachment D-3-1. EDS Phase 2 Unit Equipment Items (Continued)

Equipment ID[a]	Location	Equipment Type	Liquid or Vapor	Percent by Weight Organics	Compliance Method
37	Waste Transfer Subsystem	Valve	L	> 10%	Exempt, operates less than 300 hours per year [40 CFR 264.1050(f)]
Pan Pump P-305	Waste Transfer Subsystem	Pump	L	> 10%	Monitor during operations
Rupture Disc (RD) 500A	Process Waste Container 1	Valve	V	> 10%	During normal operation, the device is in the closed sealed position. The regulations require that after a pressure release has occurred, the rupture disc is to be returned to a condition of no detectable emissions as indicated by instrument reading of less than 500 parts per million (ppm) above background, as soon as practicable but no later than 5 calendar days after each pressure release, unless a delay in repair is necessary under 40 CFR 264.1059. Leak detection monitoring is to be conducted per 40 CFR 264.1063 using Reference Method 21. However, for EDS operations, the rupture disc will be replaced if a pressure release occurs. Replacing the rupture disc is a more conservative measure than returning the disc to service; thus, the intent of the regulation is more than met and no leak detection monitoring is required.

Table Attachment D-3-1. EDS Phase 2 Unit Equipment Items (Continued)

Equipment ID[a]	Location	Equipment Type	Liquid or Vapor	Percent by Weight Organics	Compliance Method
Rupture Disc (RD) 500B	Process Waste Container 1A	Valve	V	> 10%	During normal operation, the device is in the closed sealed position. The regulations require that after a pressure release has occurred, the rupture disc is to be returned to a condition of no detectable emissions as indicated by instrument reading of less than 500 parts per million (ppm) above background, as soon as practicable but no later than 5 calendar days after each pressure release, unless a delay in repair is necessary under 40 CFR 264.1059. Leak detection monitoring is to be conducted per 40 CFR 264.1063 using Reference Method 21. However, for EDS operations, the rupture disc will be replaced if a pressure release occurs. Replacing the rupture disc is a more conservative measure than returning the disc to service; thus, the intent of the regulation is more than met and no leak detection monitoring is required.

Note:

[a] Pumps, Sample Connection System Valves, and ID numbers are identified in **Figure Attachment D-3-1**.

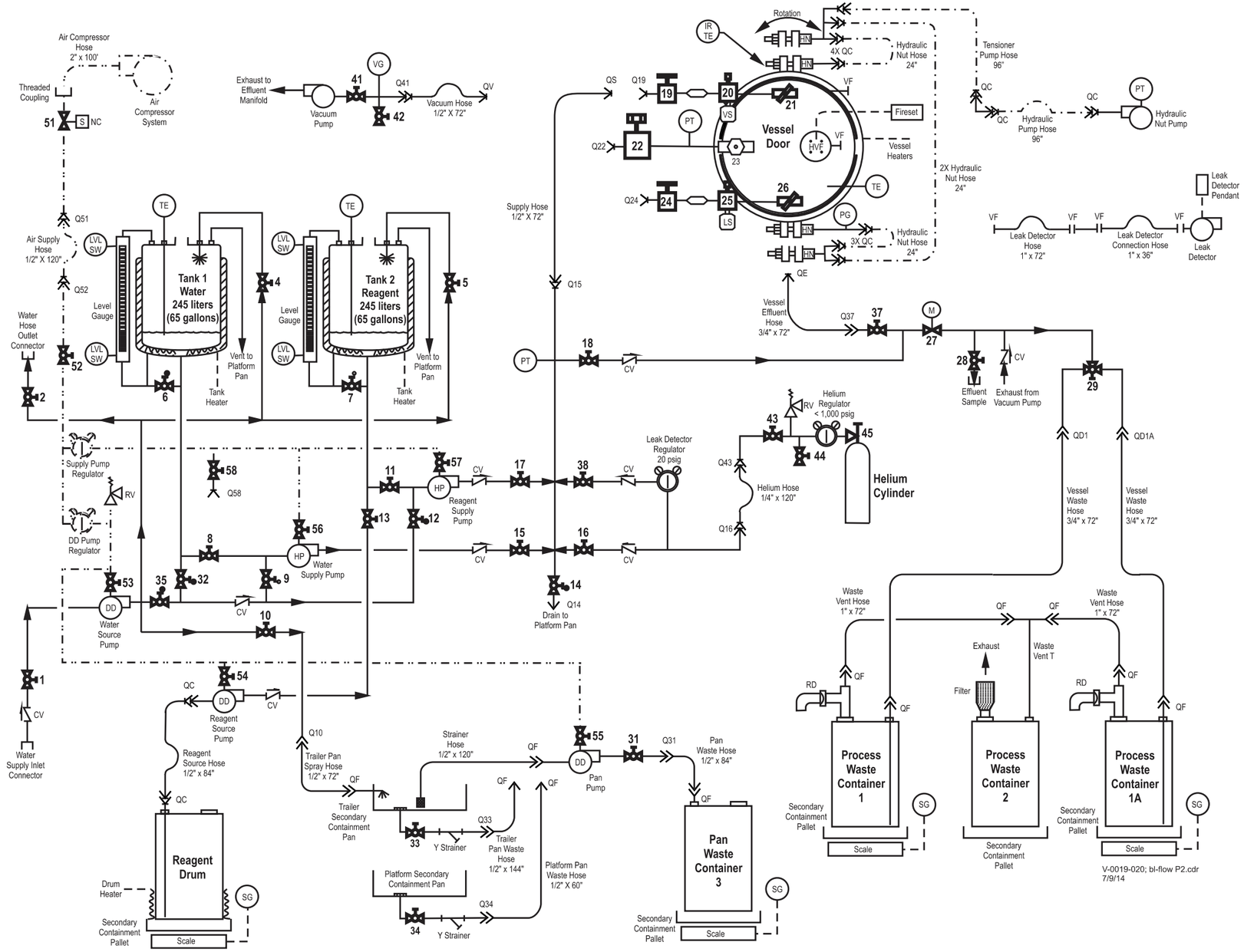

Figure Attachment D-3-1. EDS Phase 2 Unit Flow Diagram

Additionally, associated with each equipment type, there are exemptions pertaining to monitoring and inspection frequency requirements. These equipment-specific exemptions are summarized in **Table Attachment D-3-2** along with comments on applicability to EDS equipment items.

3.2 Overall Compliance Strategy

This attachment identifies the service type, equipment type, and compliance methodology for each piece of equipment. A process description of the EDS is provided in **Section D** of this permit modification application.

3.3 Determination of Service Type

There are three classes of service under 40 CFR 264.1051: (1) "in gas/vapor service," (2) "in light liquid service," and (3) "in heavy liquid service." "In gas/vapor service" is defined as containing or contacting a waste stream that is in the gaseous state at operating conditions. "In light liquid service" is defined as containing or contacting a stream where at least one organic component has a vapor pressure greater than 0.3 kPa at 20°C, the total concentration of the pure organic component(s) having vapor pressure greater than 0.3 kPa at 20°C is 20 percent by weight or greater, and the fluid is a liquid at room temperature. "In heavy liquid service" is defined as equipment not "in gas/vapor service" or "in light liquid service." It is necessary to know the methods of operation to determine the type of service.

The EDS units can operate in two distinct modes. One mode treats liquid chemical agents with organic liquid reagents. All organic liquid components and chemical agents have vapor pressures at 20°C of less than 0.3 kPa. The other mode is to process chemical fills in their vapor form, such as phosgene (CG), with caustic liquid reagent.

The vapor pressures of the various chemical fills to be treated in the EDS and associated treatment reagents are summarized in **Table Attachment D-3-3**. The vapor pressure for the treatment reagent monoethanolamine (MEA) is 0.0117 kPa.[2] All of the chemical fills to be treated have at least one organic

[2] SAIC Calculation of Vapor Pressure from Gomez-Thodos Correlation data from Reid, Robert C., John M. Prausnitz, and Bruce P. Poling, *The Properties of Gases and Liquids*, 4th Edition, McGraw-Hill Book Co., 1987. (MEA)

Table Attachment D-3-2. Subpart BB Equipment Standards and Exemptions

Equipment Type/General Requirement	Exemption	Applicable/Comment
1. *Sampling Connection Systems [40 CFR 264.1055]*. Sampling connection systems must be equipped with a closed-purge, closed-loop, or closed-vent system. The system must collect the sample purge and return the sample purge to the process or route it to the appropriate treatment system. Gases displaced during filling of a sample container do not have to be collected or captured.	*In-situ* sampling systems are exempt per 40 CFR 264.1055(c).	Each EDS unit has two sample connection systems. A: The EDS Vapor Sample System is closed-loop and meets requirements. Purged wastes are returned to the process. Meets 40 CFR 264.1055(a) and 264.1055(b)(1). B: The EDS Liquid Sampling System is *in-situ* and is exempt per 40 CFR 264.1055(c).
2. *Valves in Gas/Vapor Service or in Light Liquid Service [40 CFR 264.1057]*. Monitor monthly to detect leaks using methods specified in 40 CFR 264.1063(b) (Method 21).	1. Valves designated as no detectable emissions as indicated by instrument reading of less than 500 ppm above background	1. Not applicable to RSA-EDS site operations.
	2. Valve designated as unsafe to monitor, provided determination is made that required monitoring would pose immediate danger to monitoring personnel, and owner/operator follows written plan to monitor valve as frequently as practicable during safe-to-monitor times.	2. Not applicable to RSA-EDS site operations.
	3. Valve is designated as difficult to monitor, and therefore, exempt if the valve cannot be monitored without elevating monitoring personnel 2 meters above a support surface; the hazardous waste management unit in which the valve is located was in operation before June 21, 1990; or the owner or operator of the valve follows a written plan to monitor the valve at least once per calendar year.	3. Not applicable to RSA-EDS site operations.

Table Attachment D-3-2. Subpart BB Equipment Standards and Exemptions (Continued)

Equipment Type/General Requirement	Exemption	Applicable/Comment
3. *Pumps and Valves in Heavy Liquid Service, Pressure Relief Devices in Light Liquid Service or Heavy Liquid Service, and Flanges and Other Connectors [40 CFR 264.1058].* Must be monitored within 5 days if evidence of potential leak is observed.	There are no exemptions.	There are no exemptions.

Notes:

EDS = Explosive Destruction System
ppm = parts per million
RSA-EDS = Redstone Arsenal Explosive Destruction System

Table Attachment D-3-3. Chemical Fill and Treatment Reagent Vapor Pressures

Chemical Fill	Vapor Pressure (kPa) at 20°C
Sulfur Mustards (HD, HS, and HT)	0.00896 (value for H Mustard)
Nitrogen mustard (HN-3)	0.00088
Lewisite (L)	0.0518
Phosgene (CG)	159.9
Carbon tetrachloride + Chloroacetophenone + benzene (CNB)	Benzene: 10.0 Carbon Tetrachloride: 12.3 CN: 0.0159
Chloroacetophenone + chloropicrin + chloroform (CNS)	Chloroform: 21.2 PS: 2.65 CN: 0.0159
Arsenicals [Diphenylchloroarsine (DA) and phenyldichloroarsine (PD)	DA: 0.00006 PD: 0.00296
Sulfur trioxide + chlorosulfonic acid (FS smoke)	Inorganic
Titanium tetrachloride (FM smoke)	Inorganic
Treatment Reagents	
Monoethanolamine (MEA)	0.0117
Sodium permanganate ($NaMnO_4$)	Inorganic
Propylene glycol	0.01
Sodium hydroxide (NaOH)	Solid state

Source: Safety Data Sheet, U.S. Army Edgewood Chemical Biological Center

component with a vapor pressure less than 0.3 kPa. Therefore, when treating liquid chemical fills with organic reagents, the EDS treatment equipment will be "in heavy liquid service."

When processing CG, once treated, the resulting liquid waste will not have an organic content of 10 percent. However, before the treatment reagent is added, certain waste treatment equipment will be exposed to CG. Therefore, certain equipment will be "in gas/vapor service." The solubility of CG in NaOH is 0.0003 percent by weight, so there will be no appreciable concentration of CG outside the Containment Vessel. Therefore, the liquid (NaOH solution) during CG treatment has an organic content of less than 10 percent.

Other chemical fills such as FM smoke (titanium tetrachloride) and FS smoke (sulfur trioxide and chlorosulfonic acid) contain no organic components in their molecular structures, and therefore, are not subject to Subpart BB requirements.

3.4 Monitoring of Equipment

During EDS operations, near real-time monitoring will be performed using MINICAMS®. MINICAMS alarms will be confirmed using Depot Area Air Monitoring System (DAAMS) for chemical agent or dosimeter badges for CG. Historical monitoring will be performed using DAAMS tubes for chemical agent. No historical monitoring is required for industrial chemicals.

Before every process detonation, a helium leak check will be conducted to confirm the integrity of the Containment Vessel door seals. During routine maintenance (per the EDS operations and maintenance schedule), the vessel door metal seal and high-voltage flange seal, vessel door feedthroughs, medium pressure valves and fittings are leak checked.

Attachment F-3 of this permit modification application identifies the maximum concentration values for chemicals not to be exceeded for a given period of time, depending on the level of protection worn by personnel. The monitoring levels are below the 10,000 parts per million (ppm) designation for a leaking piece of equipment required in 40 CFR 264.1057(b), 40 CFR 264.1058(b), and 40 CFR 264.1061(c)(2). **Attachment F-3** of this permit modification application contains information on the monitoring devices.

The intention of the RCRA Subpart BB regulations is to reduce organic vapor emissions from specific types of equipment. Workspace monitoring conducted during EDS operations, coupled with periodic leak checks of the Containment Vessel door, is a more conservative approach than the monthly monitoring required by the regulations and will identify any equipment leaks.

3.5 Repair and Leak Testing

In the event of a monitoring alarm, the munition or item will be secured and the source of the alarm will be investigated. Leaking equipment will be replaced as soon as operationally feasible but no later than prior to processing the next munition. Regulations 40 CFR 264.1052(c), 40 CFR 264.1057(d), and 40 CFR 264.1058(c), require that the first repair attempt be within 5 days of when a potential leak is identified. For the RSA-EDS site operation, all suspected leaks will be verified and repaired as necessary within 5 days. Post-repair testing will be conducted on the affected area of the system. Post-repair testing is defined as testing after a detected leak is repaired. After routine preventive maintenance, the EDS units will be returned to service and monitored in accordance with monitoring criteria in this attachment. Equipment testing after completing routine preventive maintenance is not required for compliance with this Plan.

3.6 EDS Air Filtration System (AFS) Carbon Filter System

The EDS AFS carbon filters are an added protection feature and not subject to Subpart BB. A description of the AFS is provided in **Attachment D-1** and performance calculations are provided in **Attachment D-4** of this permit modification application.

3.7 Recordkeeping and Reporting

Leak detection and worker safety monitoring results will be recorded in the RSA-EDS site operating record and logged in accordance with 40 CFR 264.1064(d). Operating hours[3] per year will be recorded for equipment items identified as exempt (see **Table Attachment D-3-1**) under 40 CFR 264.1050(f), per requirements in 40 CFR 264.1064(k), using a form presented in **Figure Attachment A-1**. All required reports will be submitted in accordance with 40 CFR 264.1065. A schematic is provided in lieu of individually marking the equipment item required by 40 CFR 264.1050(d). See **Figure Attachment D-3-1** for equipment location schematic.

4.0 APPLICABILITY OF AAC 335-14-5-.29 – AIR EMISSION STANDARDS FOR TANKS, CONTAINERS, AND SURFACE IMPOUNDMENTS [AAC 335-14-5-.29]

Subpart CC requirements apply to permitted treatment, storage, and disposal facilities (TSDFs) that manage hazardous waste in tanks, containers, surface impoundments, or miscellaneous units and to large quantity generators that accumulate hazardous wastes in tanks and containers. Waste management units that contain hazardous wastes with an average volatile organic concentration of greater than or equal to 500 ppmw at the point of origin are subject to Subpart CC requirements. This section describes the applicability of Subpart CC to the EDS unit and the less than 90-day hazardous waste storage area, including exclusions and exemptions, as well as the requirements specified by AAC 335-14-5-.29, 40 CFR 264.1080.

The RSA-EDS site will contain RCRA-permitted EDS units, plus a less than 90-day hazardous waste storage area. The less than 90-day hazardous waste storage area will be located at Redstone Arsenal (RSA), a large quantity generator; therefore, the Subpart CC requirements apply.

---

[3] Operating hours are defined as direct contact time with hazardous wastes as measured from the time draining of wastes from EDS Containment Vessel starts until the time draining ends.

A waste determination (through chemical analysis or process knowledge) is required to prove a waste stream is exempted from Subpart CC. No determination is required if the wastes are placed in waste management units that employ air emission controls in compliance with Subpart CC. For ease of operation, the Army assumes that the EDS units and less than 90-day hazardous waste storage area will contain hazardous waste with an average volatile organic concentration of greater than or equal to 500 ppmw at the point of waste origin. This means that all wastes entering and exiting the EDS units and entering the less than 90-day hazardous waste storage area for storage will be subject to the Subpart CC requirements unless a particular waste stream or waste management unit meets an exclusion or exemption and that exclusion or exemption is documented in this Plan.

4.1 Exclusions and Exemptions

Of the general exclusions and exemptions under 40 CFR 264.1080, one is applicable to EDS operations. Waste management units used solely for onsite treatment or storage of hazardous waste that is placed in the unit as a result of implementing remedial activities required under the corrective action authorities of RCRA sections 3004(u), 3004(v), or 3008(h); Comprehensive Environmental Response, Compensation, and Liability Act (CERCLA) authorities; or similar federal or state authorities [40 CFR 264.1080(b)(5)] are exempt. The EDS unit is used to treat recovered munitions or other items obtained from remediation areas at RSA under a corrective action program described in the Alabama Hazardous Wastes Management and Minimization Act (AHWMMA) Hazardous Waste Permit. Thus, the EDS unit is exempt from Subpart CC requirements.

Containers associated with the EDS Waste Transfer Subsystem are applicable to Subpart CC requirements.

4.2 Levels of Control for Containers

For containers, there are three levels of controls. Container controls are based on design capacity, total organic content of the material in the container (in or out of light service), and use of the container (for example, treatment by stabilization or other methods).

4.3 Method of Compliance or Exemptions

The total organic content of the material in the container refers to whether the material is “in” or “out” of light service. In or out of light service is determined by the vapor pressure of the waste material at 20°C.

This determination is required when storing wastes in containers that are greater than 0.46 cubic meter (m^3) (121 gallons). For this EDS operation, waste containers greater than 0.46 m^3 (121 gallons) by volume are considered in heavy service based on the vapor pressures of chemical fills and treatment reagents described in **Section 3.3**.

EDS Units

Although exempt from Subpart CC for this operation, the EDS units comply with Subpart CC by meeting Level 1 and Level 2 controls for containers. In this aspect, the Containment Vessel resembles a container greater than 46 m^3 (121 gallons) in size, is not in light material service, and is equipped with a cover and closure device that forms a continuous barrier over the container opening so that there are no visible holes, gaps, or other open spaces into the interior of the container when the cover and closure devices are secured [40 CFR 264.1086(c)(ii)].

When processing industrial chemical fills with kPa values greater than 0.3 kPa, the Containment Vessel is in light material service and meets Control Level 2 by operating with no detectable organic emissions as indicated by worker protection monitoring and vessel helium leak check. Worker protection monitoring and helium leak checking are conducted more frequently and at lower concentration values than those stated in the regulations pertaining to no detectable emissions (less than 500 ppmw using Method 21, annual requirement) and vapor tight demonstration (using Method 27, annual requirement), respectively.

EDS Waste Transfer Subsystem

The Waste Transfer Subsystem waste containers meet Control Level 1 as they have a design capacity greater than 0.1 m^3 (26 gallons) and less than or equal to 0.46 m^3 (121 gallons) and meet one of the following requirements:

- Container meets applicable Department of Transportation (DOT) regulations on packaging hazardous materials for transportation under 49 CFR 107, 172, 173, 178, 179, and 180 [40 CFR 264.1086(f)]

- Container is equipped with a cover and closure devices that form a continuous barrier over the container openings so that there are no visible holes, gaps, or other open spaces leading into the container when the cover and closure devices are secured.

RSA-EDS Site Less than 90-Day Hazardous Waste Storage Area

Containers less than or equal to 0.1 m^3 (26 gallons) and larger will be used to store wastes at the RSA-EDS site less than 90-day hazardous waste storage area. All containers, including those greater than 0.46 m^3 (121 gallons), will meet Level 1 controls by meeting one of the following requirements:

- Container meets applicable DOT regulations on packaging hazardous materials for transportation under 49 CFR 107, 172, 173, 178, 179, and 180 [40 CFR 264.1086(f)].

- Container is equipped with a cover and closure devices that form a continuous barrier over the container openings so that there are no visible holes, gaps, or other open spaces leading into the container when the cover and closure devices are secured.

4.4 Operating Requirements for Container Control Level 1

Containers will be kept closed except when adding, removing, or sampling wastes.

4.5 Inspection, Recordkeeping, and Repair Requirements for Container Level 1

Ensure closure devices (lids, bungs, covers) are in good condition (closed securely, no visible damage that would impair storage). Containers using Control Level 1 must be visually inspected for defects at the time the waste is first managed in the container or when accepted at the facility (in this case, the less than 90-day hazardous waste storage area). A visual inspection will be recorded when the containers are connected to the EDS Waste Transfer Subsystem to ensure good condition prior to processing wastes in an EDS; and also when waste containers are placed in the less than 90-day hazardous waste storage area. Upon discovering any defect, an effort will be made to repair the container within 24 hours. The container defect must be repaired or the container removed from service immediately if leaking.

(This page intentionally left blank.)

ATTACHMENT A

OPERATING LOG FOR EDS EXEMPT EQUIPMENT ITEMS

(This page intentionally left blank.)

SUBPART BB HAZARDOUS WASTE TRANSFER TIME TRACKING SHEET										
If Accumulated Time Reaches 250 hours, contact the Command Post or Environmental Coordinator										
EDS Unit:										
EQUIPMENT ID[1]										
DATE	TIME (24hr)	**Valve 19** Vapor Sample Line	**Valve 24** Liquid Sample Line	**Valve 28** Effluent Sample	**Valve 37** Vessel Effluent Hose	**Valve 27** Motor-Driven Shut-Down	**Valve 29** 3-Position Effluent Flow	**Valve 31** Pan Pump to Container W3	**Valve 33** Trailer Sump Y-Strainer	**Valve 34** RSS Sump Y-Strainer
	Start: Stop:									
	Start: Stop:									
	Start: Stop:									
	Start: Stop:									
	Start: Stop:									
	Start: Stop:									
	Start: Stop:									
	Start: Stop:									
Accumulated Transfer Time: (*hh:mm:ss*)										

[1] *"Equipment ID"* means each valve, pump, compressor, pressure relief valve, sampling connection system open-ended valve or line, flange, or other connector, and any control devices or systems that contains or contacts hazardous wastes with organic concentrations of at least 10 percent organic content by weight and is managed in a hazardous waste management unit.

Note: Times entered in columns divided by dotted lines are normally the same (i.e., waste flow between valves 37, 27, and 29).

V-0019-020; Tracking Sheet.pptx
7/9/14

Figure Attachment A-1. Example Subpart BB Hazardous Waste Transfer Time Tracking Sheet

(This page intentionally left blank.)

ATTACHMENT D-4

EDS AIR FILTRATION SYSTEM CARBON FILTER PERFORMANCE

(This page intentionally left blank.)

ATTACHMENT D-4
EDS AIR FILTRATION SYSTEM CARBON FILTER PERFORMANCE

1. INTRODUCTION

1.1 Purpose

Up to two Explosive Destruction System (EDS) units will be located at the Redstone Arsenal Explosive Destruction System (RSA-EDS) site, Redstone Arsenal, Alabama. Each EDS unit will be located inside an Environmental Enclosure that provides weather protection and interior environmental control for worker comfort and safety. Each enclosure will have at least one Air Filtration System (AFS). Each AFS includes prefilter, high efficiency particulate air (HEPA), and activated or sulfur-impregnated (depending on the chemical fill being treated) high efficiency gas adsorber (HEGA) filter units, and an induced draft fan to maintain a negative pressure within the structure relative to the outside air and to capture vapors that may result from handling and treatment operations.

This attachment contains a description of an enclosure AFS and carbon filter unit components plus calculations on carbon filter performance. The purpose of the calculations is to predict how the carbon filter will perform during a catastrophic event.

- **Appendix Attachment D-4-1** contains a list of acronyms and abbreviations.
- **Appendix Attachment D-4-2** details the calculations for the catastrophic release scenario.
- **Appendix Attachment D-4-3** is a list of references.

A description of the EDS and treatment operation is provided in **Section D** of this permit modification application.

1.2 Background

An Environmental Enclosure surrounds the EDS. The AFS provides negative pressure ventilation for the enclosure and filters air from the enclosure before it is released to the environment. Gases from the EDS

treatment process are vented through a duct to the AFS. The release of gases from the EDS to the AFS is a controlled process and is not performed until the treatment level has been reached. Therefore, the amount of chemical agent released from the EDS to the AFS is negligible. The greatest potential for agent challenge to the AFS would be if a munition were to leak while inside the Environmental Enclosure, but before it has been sealed inside the EDS Containment Vessel.

The AFS consists of a prefilter, a HEPA filter, two HEGA filter banks in series, another HEPA filter, and a motor-powered exhaust fan. The filter unit fan draws air from the Environmental Enclosure through the carbon filter unit components and subsequently discharges to the atmosphere.

The two HEGA filter banks in the enclosure AFS are composed of either activated carbon impregnated with copper, silver, zinc, molybdenum, and triethlyenediamine (ASZM-TEDA) or sulfur-impregnated carbon (SIC) beds, depending on the chemical fills to be treated.

1.3 Methodology for Evaluating Calculation Results

The evaluated scenario has been developed using an indoor spill scenario developed for the Federal Emergency Management Agency and U.S. Army Chemical Stockpile Emergency Preparedness Program (CSEPP) and presents conservative operating conditions and maximum anticipated operating parameters.

1.4 EDS Safeguards

Safeguards and procedures have been established to ensure that: (1) filter units are operating properly before treatment operations begin and (2) if breakthrough occurs, necessary actions are taken to restore filter performance.

EDS safeguards include:

- Leak-testing of AFS carbon filter banks
- Midbed agent monitoring
- Carbon changeout.

Leak-Testing Carbon Banks

EDS carbon filters are tested before first use, after each changeout of carbon filters, and before restarting operations after a temporary closeout. Testing is in accordance with the American National Standards Institute/American Society of Mechanical Engineers (ANSI/ASME) standard N510-2007, "Testing of Nuclear Air Cleaning System."

Midbed Agent Monitoring

Operational safeguards present at the EDS provide for system reliability. As described in **Attachment F-3** of this permit modification application, MINICAMS® and Depot Area Air Monitoring System (DAAMS) confirmation monitoring will be used to monitor the enclosure AFS. The presence of chemical agent at the midbed is monitored continuously; the filters are replaced should breakthrough be confirmed. Monitoring will be performed to provide sufficient warning so that corrective action can be taken before a release of chemical agent occurs.

Carbon Changeout Strategy

Mandatory criteria have been established for changing out banks of activated carbon in the enclosure AFS when chemical agent is positively detected in the midbed or exhaust monitoring locations. Carbon filters will be changed out when (1) midbed monitoring confirms breakthrough of chemical agent at a concentration at or above the vapor screening level (VSL) alarm level and (2) after completing EDS treatment operations (Resource Conservation and Recovery Act [RCRA] closure). If a carbon midbed monitoring detection is confirmed, the operation will be brought to a safe shutdown state. The first carbon filter will be removed and disposed of, the second carbon filter will be moved to the first, and a new carbon filter will be added as the second filter. All filters will be leak checked in accordance with the ANSI N510-2007 standard before processing may resume. The in-place leak tests ensure mechanical integrity of the filter units before bringing them back into service after the carbon changeout.

2. CALCULATION METHOD

Vapor emission rates are calculated based on physical properties and process parameters. The emission period for vapors will be scenario-specific, but a time sequence for operation, monitoring, and

performance of corrective actions will be postulated. Termination of the emission event will be recognized when engineering containment of the release is re-established.

3. CALCULATION SCENARIOS

The following scenarios were considered:

- Catastrophic release of mustard agent (H) within the EDS enclosure from the rupture of a munition outside the EDS Containment Vessel.

- Catastrophic release of phosgene (CG) within the EDS enclosure from the rupture of a munition outside the EDS Containment Vessel.

Calculations for this scenario are presented in **Appendix Attachment D-4-2** of this attachment.

3.1 Catastrophic Scenario

The catastrophic scenarios evaluated are the accidental release of H, the fill material present in greater than half of the items anticipated to be treated in the EDS and CG, the fill material with the greatest volatility. The spill size was assumed to be the entire contents of the largest item expected to contain that fill and be brought into the EDS enclosure. It was assumed that the spilled liquid formed a pool 0.1 centimeter deep that was open to the room (as opposed to being contained in a sump).

The largest H-filled item is a 155mm projectile, which could contain up to 11.7 pounds (lbs) (0.148 cubic feet) of H (SciTech, 1998). This amount of H fill (11.7 lbs) equates to approximately 7.6 lbs (0.096 cubic feet) of liquid mustard agent, as the rest is solid heel. After being placed into a munition, H forms a heel of solid material, which no longer being liquid would not flow from the munitions. A study of 155mm H-filled munitions revealed that the average munition contained 39 percent heel while the median value was 32 percent. Therefore, a heel value of 35 percent was used for these calculations (PMCD, 2011). It is assumed that 1 hour is needed for the spilled material to be contained and that the temperature of the spilled material is 30°C. Based on these assumptions, the filter challenge is calculated to be the amount of agent that would be adsorbed by the carbon filter in 60 minutes at 30°C. The minute by minute iterative calculations showed that only 0.04210 lb of H was transferred to the carbon filter in 60 minutes and 0.04206 lb was adsorbed by the carbon filter with 99.9 percent mechanical efficiency.

The largest CG-filled munition is a 4.2-inch mortar, which could contain 6.25 lbs of CG (0.073 cubic feet) (SciTech, 1998). Due to its high volatility, the minute by minute iterative calculations showed that the entire mass (6.25 lbs) of CG evaporated in 21 minutes (before any containment could be performed at 60 minutes after the spill). The calculations also showed that the amount transferred to the carbon filter in 60 minutes was 6.232 lbs and the amount adsorbed by the carbon filter was 6.226 lbs. The difference (0.006 lb) between the amount evaporated (6.25 lbs) and amount transferred to the carbon filter (6.232 lbs) is the amount left in the enclosure air.

3.2 Calculations

Catastrophic Scenario. The catastrophic emission scenario calculations are presented in **Appendix Attachment D-4-2**.

4. RESULTS

4.1 Catastrophic Emission

4.1.1 H Scenario. The evaporation for H was calculated to be 135.5 milligrams per minute (mg/min) per square meter (m^2) (or 368 mg/min based on 2.72 m^2 pool area). A mass of 0.04210 lb of H was transferred to the carbon filter during the 60 minutes after the spill. The amount adsorbed by the carbon filter was 0.04206 lb during these 60 minutes. Thus, the emissions from the carbon filter would be 0.00004 lb in the first 60 minutes after the spill. The maximum concentration in the exhaust air was estimated to be 0.00266 milligram per cubic meter (mg/m^3) during this 60-minute period. Based on a carbon filter capacity for H of 0.2 gram (g) of H per g of carbon, the total filter capacity (assuming 2,000 pounds of carbon) is approximately 400 lbs of H. The filter is capable of handling more than 9,000 H maximum credible events (MCEs) without breakthrough. Therefore, the catastrophic event would not result in breakthrough of the carbon filter.

4.1.2 CG Spill Scenario. CG has a boiling point of 8°C, which is below the assumed room temperature of 30°C, meaning the liquid CG will boil once it has been released from its container. Therefore, the calculation for evaporation of CG must take into account adiabatic flashing as well as evaporation from a boiling pool. It was calculated that the entire contents of the leaking munition would evaporate in 27 minutes. The amount of CG transferred to the AFS carbon filter is estimated to be 6.241 lbs in 60 minutes. The amount adsorbed by the carbon filter is 6.235 lbs with 99.9 percent mechanical efficiency. Thus, the emissions from the filter would be 0.006 lbs in the first 60 minutes after

the spill. The maximum concentration in the exhaust air was calculated to be 0.6 mg/m^3 during this 60-minute period. The AFS filter capacity for CG is 300 lbs, which is more than 40 times greater than the amount of CG entering the filter in 60 minutes; therefore, the AFS will not reach breakthrough from a single MCE.

5. CONCLUSIONS

The carbon filter unit used in the enclosure AFS was specifically designed for chemical agent processing operations and is more than adequate to handle normal as well as catastrophic releases as shown by calculations. The use of this filtration system, in addition to EDS Standing Operating Procedures, will ensure that normal EDS operations with accidental spills pose little threat to human health and the environment.

The calculations for an unlikely catastrophic release of H or CG within the EDS enclosure indicate that the enclosure AFS has sufficient capacity to contain H or CG vapors without breakthrough of the AFS. The filter challenge from the H catastrophic scenario was determined to be 0.04206 lb of H and the filter capacity for H was calculated to be 400 lbs of H. The filter challenge from the CG catastrophic release scenario was determined to be 6.235 lbs of CG and the filter capacity for CG was calculated to be 300 lbs.

The maximum 1 minute emission rate for H leaving the AFS is 0.0027 mg/m^3, which is less than the source emission limit (SEL) of 0.03 mg/m^3 and below the VSL of 0.003 mg/m^3. There is no source emission limit for CG. However, Occupational Safety and Health Administration (OSHA) has an 8-hour time-weighted average (TWA) of 0.4 mg/m^3. By comparison, the 8-hour TWA for CG emissions from the MCE scenario is only 0.042 mg/m^3, almost 10 times less than the OSHA TWA.

APPENDIX ATTACHMENT D-4-1
ACRONYMS AND ABBREVIATIONS

(This page intentionally left blank.)

APPENDIX ATTACHMENT D-4-1
ACRONYMS AND ABBREVIATIONS

AFS	Air Filtration System
ANSI	American National Standards Institute
ASME	American Society of Mechanical Engineers
ASZM-TEDA	Activated Carbon, Impregnated with Copper, Silver, Zinc, Molybdenum, and Triethlyenediamine
cfm	cubic feet per minute
CG	phosgene
cm	centimeter
CSEPP	Chemical Stockpile Emergency Preparedness Program
DAAMS	Depot Area Air Monitoring System
EDS	Explosive Destruction System
ft	feet
ft^3	cubic feet
g	gram
g/g	gram per gram
H	sulfur mustard (bis(2-chloroethyl) sulfide)
HEGA	high efficiency gas adsorber
HEPA	high efficiency particulate air
kg	kilogram
kg/hr	kilogram per hour
lbs	pounds

m^2	square meter
m/min	meter per minute
MCE	maximum credible event
mg	milligram
mg/min	milligram per minute
mg/m^3	milligram per cubic meter
mm	millimeter
OSHA	Occupational Safety and Health Administration
psia	pounds per square inch absolute
RCRA	Resource Conservation and Recovery Act
RSA-EDS	Redstone Arsenal Explosive Destruction System
SEL	source emission limit
SIC	sulfur-impregnated carbon
TWA	time-weighted average
VSL	vapor screening level

APPENDIX ATTACHMENT D-4-2
CATASTROPHIC RELEASE
MUSTARD AGENT (H) AND PHOSGENE (CG) CALCULATIONS

(This page intentionally left blank.)

APPENDIX ATTACHMENT D-4-2
CATASTROPHIC RELEASE
MUSTARD AGENT (H) AND PHOSGENE (CG) CALCULATIONS

1. PURPOSE

Determine the capacity of the enclosure Air Filtration System (AFS) to contain chemical agent during a catastrophic release within the Explosive Destruction System (EDS) enclosure.

Calculations were performed for two catastrophic release scenarios: a spill of sulfur mustard (H) and a phosgene (CG) spill. Of the many potential chemical fills that will be treated at the RSA-EDS site, H was selected because more than half of the items likely to be brought into the EDS enclosure are expected to be mustard-filled munitions. Therefore, assuming all the munitions are equally corroded, it is most likely that if there is a leak, it will be from an H-filled munition. The calculation was also performed for CG because CG is the most volatile of the chemical fills that are likely to be treated in the EDS.

The catastrophic release scenario for H assumes spillage of the liquid portion of a 155mm projectile (the largest recovered munition likely to contain H) contents inside the EDS enclosure. The CG scenario assumes the spill of the contents of a 4.2-inch mortar (the largest item expected to contain CG) inside the EDS enclosure.

2. ANALYTICAL METHOD

- Calculate volume of EDS enclosure.
- Calculate H and CG challenges to the AFS.
- Calculate H and CG evaporation rates.
- Calculate mass of H and CG evaporated.
- Calculate enclosure AFS capacity for H and CG.
- Calculate H and CG emission rate.

3. H AND CG SCENARIO INPUTS

EDS Enclosure Dimensions (Universal Fabric Structures, 2009)

Length	50 feet (ft)
Width	30 ft
Height to peak	16.83 ft

Munitions (SciTech, 1998)

Type	155mm projectile, M110
Fill	11.7 pounds (lbs) H
Heel	35%
Liquid H	7.6 lbs
Density of H	79.28 lbs/cubic foot
Volume of Liquid H	0.096 cubic feet (ft^3)

Type	4.2-inch mortar
Fill	6.25 lbs CG
Density of CG	85.53 lbs/cubic foot
Volume of CG	0.073 ft^3

AFS Specifications

Flow rate	5,600 ft^3 per minute (cfm)
Mass of carbon	2,000 lbs
Filter mech. efficiency (H) (per ASME N-510-1)	99.9%
Carbon capacity H	0.2 gram of H per gram (g/g) of carbon (based on Mahle, 2008)
Filter mech. efficiency (CG)	99.9%
Filter capacity CG	0.15 lbs/lb of carbon

4. ASSUMPTIONS

1. The EDS enclosure has no interior rooms or false ceilings.
2. Airflow through the room is constant and uniform.
3. The spilled material forms a pool 0.1 centimeter (cm) deep.
4. Evaporation rate is constant over the duration of the calculation.
5. The spilled liquid is at the same temperature as the enclosure air (30°C is assumed).
6. Ambient pressure is 14.7 pounds per square inch absolute (psia).
7. The entire mass of evaporated chemical enters the AFS; none is lost due to condensation on equipment or structural surfaces.
8. It is further assumed that 1 hour elapses before spill response actions are able to contain the spilled chemical agent.

5. H CALCULATIONS

5.1 Calculate Volume of EDS Enclosure

The volume of the EDS enclosure can be approximated by assuming the structure is an ellipse with a major axis of 33.67 feet (twice the height of the enclosure) and a minor axis 30 feet (width of the enclosure) with a length of 540 feet. Therefore, the equation used to calculate volume is the area of an ellipse times the length.

Enclosure volume = height × half the width × π × length
= 16.83 ft × 0.5 × 30 ft × 3.1416 × 50 ft
= 39,600 ft^3

5.2 Calculate H Challenge to Enclosure AFS

5.2.1 Calculate Evaporation Rate of H. This calculation used the evaporation model for indoor spill scenarios developed for the Chemical Stockpile Emergency Preparedness Program (CSEPP) (Fedele, 2003). This model is considered conservative, as it provides the highest value for evaporation flux.

$$E = C_{vol} \times V_{evap}$$

Where:

E = evaporation flux in milligrams per minute per square meter ($mg/min/m^2$)
C_{vol} = volatility of the liquid in milligrams per cubic meter (mg/m^3) = 1355.3mg/m^3 at 30°C for H
V_{evap} = evaporation transfer rate in meters per minute (m/min) = 0.1 m/min (Fedele, 2003)
E = 1,355.3 mg/m^3 × 0.1 m/min = 135.5 mg/min per m^2

Because mustard agent has about 35% heel, the liquid portion is calculated to be:

Liquid Portion = Total Content (1 - % Heel/100)
= 11.7 × (1 -35/100)
= 7.6 lbs

Because the spill amount is 7.6 lbs (3.45 kilograms [kg]), the pool area (A) is evaluated to be 29.2 sq. ft. (2.716 m^2) for H agent with density of 79.28 lbs/cubic foot and 0.039 inch (0.1 cm) pool thickness. The evaporation rate (R) for the entire spill is calculated as follows:

R = E × A
= 135.5 × 2.716
= 362.3 mg/min

5.2.2 Calculate Mass of H Evaporated in 60 Minutes.

Mass of H evaporated in 60 minutes = 60 min × (Evaporation Rate)
Mass = 60 min × 362.3 mg/min = 21,738 mg (or 0.0217 kg)
= 21,738 mg × 0.001 g/mg / 454 g/lb
= 0.0479 lbs

5.2.3 Calculate Filter Capacity for H.

Filter Capacity = (Carbon Capacity) × (Mass of Carbon)
Capacity = 0.2 lb/lb × 2,000 lb = 400 lbs

5.2.4 Calculate Emission Rate.

Amount transferred to filter in one hour = 0.0191 kg
(By iterative calculations)
Emission Rate = (Mass Rate of H Entering Filter in 1 hour) × (1 - % Filter Efficiency/100)
Emission Rate = 1.91 E-02 kg/hr × (1-0.999)
= 1.91 E-05 kg/hr
= 4.21 E-05 lbs/hr

Note: Mass rate entering the filter is calculated by evaluating the gas concentration in the room as a function of time. This concentration changes as long as there is a difference between the amount evaporated in a minute and the amount transferred to the carbon filter.

The filter capacity (400 lbs) is greater (by a factor of about 9500) than the size of the H challenge (0.0421 lb/hr). Therefore, the filter is able to contain the challenge without reaching breakthrough for H.

6. CG CALCULATIONS

6.1 Calculate Volume of EDS Enclosure

The volume of the EDS enclosure can be approximated by assuming the structure is an ellipse with a major axis of 33.67 feet (twice the height of the enclosure) and a minor axis 30 feet (width of the enclosure) with a length of 540 feet. Therefore, the equation used to calculate volume is the area of an ellipse times the length.

Enclosure volume = height × half the width × π × length
= 16.83 ft × 0.5 × 30 ft × 3.1416 × 50 ft
= 39,600 ft^3

6.2 Calculate CG Challenge to Enclosure AFS

6.2.1 Calculate Evaporation Rate of CG. This calculation used the evaporation model for indoor spill scenarios developed for boiling liquids in *Handbook of Chemical Hazard Analysis Procedures*, Appendix B, Federal Emergency Management Agency, U.S. Dept. of Transportation, and U.S. Environmental Protection Agency, 1989.

This model is expressed as follows:

$$E = (0.0001\ M)(7.7026 - 0.0288\ B)\ e^{-(0.0077\ B)-0.1376}$$

Where:

E	=	evaporation flux, (kg/min)/m²	0.06040
B	=	pool liquid atmospheric boiling point, °C	8.3
M	=	pool liquid molecular weight	99

Because the spill area (A) is evaluated to be 22.3 sq. ft. (2.07 m^2) for 6.25 lbs (2.83 kg) of agent with a density of 85.53 lbs/ft^3 and 0.039 inch (0.1 cm) pool thickness, the evaporation rate (R) for the entire spill is calculated as follows:

R = E × A
= 0.06040 × 2.07
= 0.125 kg/min (or 124,985 mg/min)

Where:

R	=	evaporation rate
E	=	evaporation flux (kg/min)/m^2
A	=	area of liquid pool m^2

6.2.2 Calculate Mass of CG Evaporated before Starting Cleanup.

By Adiabatic Flashing

$$X = 100 \cdot c_p \cdot (T_s - T_b)/H$$

Where:

X	=	weight percent vaporized by adiabatic flashing	wt %	9.19
cp	=	source liquid specific heat	J/(kg °C)	1,045
Ts	=	source liquid absolute temperature	K	303
Tb	=	source liquid absolute atmospheric boiling point	K	281
H	=	source liquid heat of vaporization at atmospheric boiling point	J/kg	246,650

By Evaporation from Boiling Pool

The time estimated for remaining liquid to evaporate is as follows:

Total Spill	=	2.835E+06 mgs
Liquid in Pool	=	Total spill – Adiabatic Flash amount
	=	[(100 - 9.19)/100] × 2.835E+06
	=	2.57E+06 mgs

Time required to evaporate entire pool	=	liquid in pool / evaporation rate
	=	2.57E+06 / 124,985
	=	21 min

Thus, all the liquid is evaporated before starting cleanup operations (1 hour from spill).

6.2.3 Calculate Filter Capacity.

Filter Capacity	=	(Carbon Capacity) × (Mass of Carbon)
Capacity	=	0.15 lb/lb × 2,000 lb = 300 lb

6.2.4 Calculate Emission Rate.

Emission Rate	=	(Mass Rate of CG Entering Filter in 60 minutes) (1 - %Filter Efficiency/100)
Emission Rate	=	2.83 kg/hr × (1-0.999)
	=	0.00283 kg/hr
	=	**0.00624 lbs/hr**

Note: Mass rate entering the filter is calculated by evaluating the gas concentration in the room as a function of time. This concentration changes as long as there is a difference between the amount evaporated in a minute and the amount transferred to the carbon filter.

The filter capacity to adsorb 300 lbs of CG is much greater (by a factor of about 48) than the CG challenge (amount adsorbed by the carbon filter) of 6.224 lb (2.83 kg) in the first hour after the spill of 6.25 lbs of CG. Therefore, the filter is able to contain the challenge without reaching breakthrough for CG.

7. CONCLUSION

As shown by calculation, the enclosure AFS has sufficient capacity that the H or CG released from the catastrophic spill scenarios will not exceed the capacity of the AFS.

(This page intentionally left blank.)

APPENDIX ATTACHMENT D-4-3
REFERENCES

(This page intentionally left blank.)

APPENDIX ATTACHMENT D-4-3
REFERENCES

American National Standards Institute (ANSI) N-510-1989, *Testing of Nuclear Air Cleaning System*, 1989.

Fedele, P., P. Georgopoulos, P. Shade, P. Lioy, M. Hodgson, and M. Brown, *In-hospital Response to External Chemical Emergencies: Personal Protective Equipment, Training, Site Operations Planning, and Medical Programs*, para. 3.5, pg. 11, 15 April 2003.

Mahle, J., L. Buettner, and T. Sewell, Edgewood Chemical Biological Center, Draft, *Umatilla Post-Treatment Filter Simulant Performance for Candidate Mercury Capture Absorbents*, 2008.

Program Manager for Chemical Demilitarization, *X-Ray Assessment of 155mm Mustard Projectiles Stored at BGCA, Richmond, KY*, 2011

SciTech Services Inc., *Old Chemical Weapons Reference Guide*, 1998.

Universal Fabric Structures, Drawing GS20090064-301, sheet 1 of 1, Gable View Col. Line 1, 2009.

(This page intentionally left blank.)

CALCULATION COVER SHEET

Calculation Number: RSA-CG CALC – 1
Revision Number: 0
Page 1 of 10

Title: **Calculation of CG Concentration in Ventilated Air from a Catastrophic Spill**

Project Identification Number:

Key Words: CG, Pool Evaporation, Catastrophic Spill, Ventilation

Charge Number: 203025.01.001.0197.515

Purpose:

The primary purpose of these calculations was to determine phosgene (CG) concentration in ventilation air from an enclosure with a catastrophic spill of 6.25 lbs of CG in the enclosure. These calculations were also intended to determine the minimum amount of spill required to reach immediately dangerous to life and health (IDLH) concentration in ventilated air from adiabatic flash of the spill.

Summary of Results:

The calculations determined that the maximum concentration of CG in ventilated air with 5,600 cubic feet per minute (cfm) flow and 6.25 lbs of spill would be 604.7 milligrams per cubic meter (mg/m^3). The amount of minimum spill required for reaching the IDLH concentration of 10 mg/m^3 in the enclosure from adiabatic flash was estimated to be 0.3 lb of CG. The concentration reached below IDLH in the enclosure after 53 minutes from the spill. It is estimated to require about 102 minutes for the concentration in the enclosure to reduce to near zero.

Name (print or type):	Signature:	Date:
Originator(s):		
Jay K. Shah		9-4-12
Reviewed by:		
Richard Travis		9-4-12
DM/Responsible Manager:		

CALCULATION REVISION LOG

Revision	Affected Pages	Reason for Revision	Description of Revision:
0	All	Original Issue	

CALCULATION TABLE OF CONTENTS

1.0 Introduction 5
2.0 Input Data 5
3.0 Assumptions 5
4.0 Analytical Methods and Calculations 5
5.0 Results 9
6.0 Conclusions 9
7.0 References 9

Appendix – A for Excel Spreadsheet Tables A-1

Table A-1 Catastrophic Spill Scenario A-2
Table A-2 Evaporation Rates A-4
Table A-3 Agent Concentration in Ventilated Air A-6

Computer Programs Used

Name	Version #	Configuration Control Version?		If NO, Description on Page/in Reference
Microsoft Office Excel 2003	11.6355.6408	YES	NO	
		YES	NO	
		YES	NO	
		YES	NO	
		YES	NO	

CALCULATION CHECKLIST

Reviewers:	Signature:	Date:
_____	_____	_____
_____	_____	_____

1.	Is the subject and/or purpose clearly stated?	YES	NO	
2.	Are the required input data and their references provided?	YES	NO	
3.	Are the assumptions clearly identified, valid, and consistent with the calculation purpose?	YES	NO	NA
4.	Are the analytical methods clearly identified?	YES	NO	NA
5.	Are the design inputs utilized appropriately?	YES	NO	
6.	Are the versions of the computer programs used identified?	YES	NO	NA
7.	Are sample input listings for all computer programs documented in the calculation?	YES	NO	NA
8.	Are the results and conclusions clearly stated?	YES	NO	
9.	Are the results consistent with expected results?	YES	NO	

If NO to any of the above, provide sheet number(s) with justification:

_____

_____

REVIEWER'S COMMENTS AND REVIEW METHOD USED (Check all that apply):

_____

_____

- ☐ Used alternative method (attached) to do calculation
- ☐ Compared results to other similar calculations
- ☐ Spot-checked calculations
- ☐ Reviewed spreadsheet formulas
- ☐ Examined inputs and followed analytical method through all steps
- ☐ Verified sources of input and analytical methods
- ☐ Considered assumptions in light of calculation purpose
- ☐ Recalculated all calculations
- ☐ Evaluated results against expectations
- ☐ Compared conclusion and summary to results in main body of calculation

Continued on additional sheets? YES NO

Number of additional sheets for reviewer's comments _____

CALCULATION SHEET

1.0 Introduction

The Explosive Destruction System (EDS) can process a 4.2-inch mortar containing 6.25 lbs of CG. The process hazard analysis (PHA) needs to evaluate the hazards associated with a catastrophic event of a total amount of CG spill from the 4.2-inch mortar. It is necessary to carry out calculations for agent CG concentration in ventilated air to determine the risk for the workers and to establish personal protective equipment (PPE) requirements.

2.0 Input Data

The following input data were required for the calculations:

Chemical	Phosgene (CG)	
Molecular Weight	99	
Room Temperature	30	°C
Boiling Point of Agent	8	°C
Specific Heat of Agent (British units)	0.25	Btu/lb/°F
Specific Heat of Agent (metric units)	1,045	J/(kg °C)
Latent Heat of Vaporization	246,650	J/kg
Quantity Spilled in Pounds	6.25	lbs
Quantity Spilled in Milligrams	2.835E+06	mg
Immediately Dangerous to Life and Health (IDLH)	10.0	mg/m^3
Monitoring Level	0.4	mg/m^3
Short-Term Exposure Limit (15-minute TWA)	0.08	mg/m^3

3.0 Assumptions

The following assumptions were made for these calculations:

- Liquid pool thickness is 0.1 centimeter (cm).

4.0 Analytical Methods and Calculations

Excel spreadsheets were used to calculate the following:

- Cross sectional area of the enclosure
- Volume of the enclosure
- Air or wind velocity through the enclosure

- Number of air changes per hour through the enclosure
- Spilled liquid pool area
- Evaporation rate for boiling liquid, including adiabatic flash
- Maximum agent concentration
- Time to reach maximum and IDLH concentrations
- Time required to evaporate entire liquid pool
- Minimum required amount of agent spill to reach IDLH concentration by adiabatic flash
- Concentration of CG in filter emissions.

A. Cross-Sectional Area

Cross-sectional area was calculated from the enclosure dimensions. The rectangular portion at the bottom was calculated by multiplying width and height of the rectangular base. The cross area for the triangular portion for the roof was calculated by multiplying one-half of the width by the gable height. Both the areas were added to get the total area as shown in table A-1, 750 square feet (sq. ft).

B. Volume of Enclosure

The volume of enclosure was obtained by multiplying the cross-sectional area with the length of the enclosure. The result was 45,000 cubic feet (cu. ft.) as shown in table A-1.

C. Wind Velocity

Volumetric flow of air was divided by the cross-sectional area to obtain the wind velocity of 0.038 meter per second (m/sec) as shown in table A-1.

D. Number of Air Changes

Air changes per hour for the enclosure were calculated by dividing airflow in cfm by the volume of enclosure in cu. ft. and multiplying the number by 60. Table A-1 shows the number of air changes to be 7 per hour.

E. Pool Area

Initially, volume of liquid is calculated by dividing the amount in lbs by the density of CG in lbs/cu. ft. The result gives volume of CG in cu. ft. The thickness of the pool is assumed to be 0.1 cm. Converting the thickness to feet from cm and dividing the volume by the thickness in feet provided the pool area in sq. ft. Table A-1 shows the pool area to be 22.27 sq. ft.

F. Evaporation Rate for Boiling Liquids, Including Adiabatic Flash

a. Adiabatic Flash of Liquefied Gas Release

The following equation is used to determine the weight fraction of liquid that flashes adiabatically upon release from a container:

$$X = 100 \cdot c_p \cdot (T_s - T_b)/H \quad \text{.....} \quad (1)$$

$$F = (X/100) \times S \quad \text{.....} \quad (2)$$

$$Q = S - F \quad \text{.....} \quad (3)$$

Where:

X	weight percent vaporized by adiabatic flashing, wt.%
c_p	source liquid specific heat, J/(kg °C)
T_s	source liquid absolute temperature, K
T_b	source liquid absolute atmospheric boiling point, K
H	source liquid heat of vaporization at atmospheric boiling point, J/kg
S	total liquid spilled, mg
F	amount of liquid flashed, mg
Q	amount of liquid in pool, mg.

By substituting the values for each parameter in Equation 1, the weight percent of adiabatically flashed liquid was determined to be 9.32%. Multiplying the weight fraction with the total amount of liquid in the container (see Equation 2) provided the flashed amount of liquid, 264,000 milligrams (mg). The initial amount in the pool was determined by subtracting the flashed amount from the total liquid spilled from the container as shown in Equation 3. The initial amount in the pool was determined to be 2,570,000 mg.

b. Liquid Evaporation

The following equations are used for predicting the rate at which liquid evaporates from the surface of a pool of liquid at a temperature greater than liquid Boiling Point (References 1 through 4)

$$E = (0.0001\ M)(7.7026 - 0.0288\ B)\ e^{-(0.0077\ B) - 0.1376} \quad \text{.....} \quad (4)$$

$$R = 1{,}000{,}000 * E * A \quad \text{.....} \quad (5)$$

Where:

E	=	evaporation flux, (kg/min)/m²
B	=	pool liquid atmospheric boiling point, °C
M	=	pool liquid molecular weight
A	=	pool area, m^2
R	=	evaporation rate, mg/min.

By substituting the values for each parameter in Equation 4, the evaporation flux was determined to be 0.04683 (kg/min)/m² as shown in table A-2. This value was converted to 96,898 mg/min, using Equation 5, by changing kilograms (kg) to mg and multiplying by the pool area in square meters (m^2).

G. Enclosure Concentrations

A stepwise approach was used to calculate concentration of agent in the enclosure, applying mass balance between the amount evaporated in a time interval of 1 minute and resulting concentration in the enclosure and mass leaving in the exhaust air (see table A-3). This procedure was repeated until the concentration in the enclosure was near zero. This maximum concentration was determined to be 604.7 mg/m^3 as shown in table A-3.

H. Time to Reach Maximum Concentration and IDLH Concentration

Using the above stepwise approach, the time required to achieve the maximum concentration was found to be 26 minutes and about 53 minutes bringing the concentration below IDLH in the enclosure as shown in table A-3.

I. Time to Evaporate Pool

The time to complete evaporation of the pool was determined to be 28 minutes as shown in table A-3.

J. Amount of Agent to Reach IDLH Concentration by Adiabatic Flash

The amount of agent to reach IDLH concentration from adiabatic flash was determined by multiplying the ratio of IDLH concentration (10 mg/m^3) with the initial concentration from adiabatic flash (207.4 mg/m^3) with the original amount of agent (6.25 lbs). The result was 0.3 lb as shown in table A-1.

K. Concentration of CG in Filter Emissions

Using the same stepwise approach as was used in paragraphs G and H above, the maximum concentration of CG in the gases leaving the Air Filtration System (AFS) filters is 0.60 mg/m^3.

5.0 Results

- The amount from adiabatic flashing of CG is 264,000 mg.
- Initial concentration of CG in the enclosure from the adiabatic flash is 207.4 mg/m^3 (see table A-3).
- The evaporation rate for CG as shown in table A-2 is 96,898 mg/min.
- The maximum concentration of CG in the enclosure is 604.7 mg/m^3.
- The time required to reach the maximum concentration in the enclosure is 26 minutes.
- The time required to evaporate the entire spilled amount of 6.25 lbs CG is 28 minutes.
- The minimum time for concentration to fall below IDLH in the enclosure is 53 minutes.
- The maximum amount of agent spill to prevent exceeding the IDLH concentration from an adiabatic flash in the enclosure is 0.3 lb.
- Time to reach a concentration of near zero in the enclosure is 102 minutes.
- The stack emissions are below the STEL value of 0.8 mg/m^3 throughout the entire spill operation.

6.0 Conclusions

The primary conclusions are as follows:

- The stack emissions are below the STEL value of 0.8 mg/m^3 throughout the entire operation.
- The enclosure concentration exceeds the IDLH concentration of 10 mg/m^3 for first 52 minutes, but is below the IDLH value when cleanup starts after 1 hour.
- The maximum amount acceptable to prevent exceeding the IDLH in the enclosure from an adiabatic flash is 0.3 lb of CG.
- Concentration of the chemical (CG) in the enclosure initially increases after adiabatic flash, passes through a maximum and then declines, reaching near zero at 102 minutes after the spill.

7.0 References

1. Federal Emergency Management Agency, U.S. Dept. of Transportation, and U.S. Environmental Protection Agency, *Handbook of Chemical Hazard Analysis Procedures*, Appendix B, 1989.

2. Clewell, H. J., *A Simple Method For Estimating the Source Strength Of Spills Of Toxic Liquids*, Energy Systems Laboratory, ESL-TR-83-03, 1983.

3. Ille, G. and C. Springer, *The Evaporation And Dispersion Of Hydrazine Propellants From Ground Spill*, Environmental Engineering Development Office, CEEDO 712-78-30, 1978.

4. Kahler, J. P., R. C. Curry, and R. A. Kandler, *Calculating Toxic Corridors*, Air Force Weather Service, AWS TR-80/003, 1980.

APPENDIX – A

EXCEL SPREADSHEET TABLES FOR RSA-CG CALCULATIONS

Table A-1. Catastrophic Spill Scenario

Input Data							
Phosgene	CG						
Molecular Weight	99						
Room Temperature	30	°C					
Boiling Point of Agent	8	°C					
Specific Heat of Agent (British units)	0.25	Btu/lb/°F					
Specific Heat of Agent (metric units)	1045	J/(kg °C)					
Latent Heat of Vaporization	246650	J/kg					
Quantity Spilled in Pounds	6.25	lb					
Quantity Spilled in Milligrams	2.835E+06	mg					
IDLH	10.0	mg/m^3					
Air Filter System (AFS)							
Amount of Carbon in AFS	2000	lbs					
Carbon Filter Efficiency	99.9	%					
Carbon Adsorption Capacity	0.15	lbs / lb of C					
EDS Enclosure Volume and Cross-Sectional Area							
Length	60	ft					
Height to Peak	23.4	ft					
Height to Break in Roof Line	14.1	ft					
Gable Height	9.3	ft					
Width	40	ft					
Gable Slope	25	degrees					
Volume of Enclosure	45000	cub. ft	0.0283	m^3/cub.ft	1274	m^3	
Cross-Sectional Area	750	sq. ft.	0.093	m^2/sq. ft.	69.675	m^2	
Ventilation Rate	5600	(cfm)	2.64	(m^3/sec)	158.6	(m^3/min)	
Wind Velocity (u)	0.038	m/sec					
Air Changes (a.c./hr)	7						

Table A-1. Catastrophic Spill Scenario (Continued)

Pool Area							
Density of Agent	85.53	lb/ft^3					
Volume of Agent	0.073	ft^3	0.00207	m^3			
Thickness of Pool	0.039	inch	0.1	cm			
Pool Area	22.27	sq. ft.	2.07	m^2			
Evaporation Rate and Time							
Adiabatically Flashed Amount of Liquid after Spill (for Boiling Liquids)	2.64E+05	mg					
Evaporation Rate for Boiling Liquids	96,898	mg/min					
Average Room Concentration Before Cleanup Starts	3.21	mg/m^3					
Minimum Agent Spill to Reach IDLH from Adiabatic Flash	0.30	lbs					
Shortest Time to Evaporate Entire Pool	28	min					
Time to Reach Maximum Room Concentration	26	min					
Time to Reduce Enclosure Concentration below IDLH	53	min					

Table A-2. Evaporation Rates

Adiabatic Flash of Liquefied Gas Release			
Chemical	**CG**		
	$X = 100 \cdot c_p \cdot (T_s - T_b)/H$		
	F = (X/100) x S		
	Q = S - F		
where:			
X	weight percent vaporized by adiabatic flashing	wt %	9.32
c_p	source liquid specific heat	J/(kg °C)	1045
T_s	source liquid absolute temperature	K	303
T_b	source liquid absolute atmospheric boiling point	K	281
H	source liquid heat of vaporization at atmospheric boiling point	J/kg	2.47E+05
S	total liquid spilled	mgs	2.83E+06
F	amount of liquid flashed	mgs	2.64E+05
Q	amount of liquid in pool	mgs	2.57E+06

Table A-2. Evaporation Rates (Continued)

Liquid Evaporation from Pool

The following equation is for predicting the rate at which liquid evaporates from the surface of a pool of cold liquid (i.e., at a liquid temperature of > BP)[1 to 4].

$$E = (0.0001\ M)(7.7026 - 0.0288\ B)\ e^{-(0.0077\ B)-0.1376}$$

R = E * A

where:

E	evaporation flux	0.04683	(kg/min)/m²					
B	pool liquid atmospheric boiling point	30	°C					
M	pool liquid molecular weight	99						
A	area of liquid pool	2.07	m^2					
R	evaporation rate	96898	mg/min					

References:

1. Federal Emergency Management Agency, U.S. Dept. of Transportation, and U.S. Environmental Protection Agency, *Handbook of Chemical Hazard Analysis Procedures*, Appendix B, 1989.

2. Clewell, H. J., *A Simple Method For Estimating the Source Strength Of Spills Of Toxic Liquids*, Energy Systems Laboratory, ESL-TR-83-03, 1983.

3. Ille, G. and C. Springer, *The Evaporation And Dispersion Of Hydrazine Propellants From Ground Spill*, Environmental Engineering Development Office, CEEDO 712-78-30, 1978.

4. Kahler, J. P., R. C. Curry, and R. A. Kandler, *Calculating Toxic Corridors*, Air Force Weather Service, AWS TR-80/003, 1980.

Table A-3. Agent Concentration in Ventilated Air

Chemical	CG										
Initial amount in room air	2.64E+05	mgs									
Initial conc.	207.41	mg/m^3									
Evaporation rate	96,898	mg/min			Ventilation Rate	5,600	cfm	2.64	m^3/sec	158.59	m^3/min
Room x-section area	750	sq.ft.	69.68	m^2	Air Velocity	7.5	ft/min	0.038	m/sec	2.28	m/min
Air changes	7	a.c. / hr	0.12	a.c. /min							
Filter efficiency	99.9	%									

Time (min)	Amount in Room Air Before Exhaust after Elapsed Time from Spill (mg)	Average Concentration in Room (mg/m^3)	Amount Transferred to Carbon Filter in the Selected Time Interval (mg)	Total Amount Transferred to Carbon Filter (mg)	Amount Left in Room (mg)	Concentration Entering Filter (mg/m^3)	Concentration Leaving Filter (mg/m^3)	Amount in Room Gas and Total Amount Transferred to Carbon Filter (mg)	Amount Left in Pool (mgs)	
0	264243.1	207.41	0	0	264243.1	207.41	0.21	2.642E+05	2.57E+06	IDLH Exceeded in room (>10 mg/m^3).
1	361140.6	283.47	32893.91	32893.91	328246.7	283.47	0.28	3.61E+05	2.47E+06	
2	425144.2	333.71	44956.05	77849.96	380188.1	333.71	0.33	4.58E+05	2.38E+06	
3	477085.6	374.48	52923.44	130773.40	424162.2	374.48	0.37	5.55E+05	2.28E+06	
4	521059.7	409.00	59389.30	190162.70	461670.4	409.00	0.41	6.52E+05	2.18E+06	
5	558567.9	438.44	64863.34	255026.04	493704.6	438.44	0.44	7.49E+05	2.09E+06	
6	590602.1	463.58	69532.50	324558.54	521069.6	463.58	0.46	8.46E+05	1.99E+06	
7	617967.1	485.06	73520.22	398078.76	544446.9	485.06	0.49	9.43E+05	1.89E+06	
8	641344.4	503.41	76926.72	475005.48	564417.7	503.41	0.50	1.04E+06	1.80E+06	
9	661315.2	519.09	79836.80	554842.28	581478.4	519.09	0.52	1.14E+06	1.70E+06	
10	678375.9	532.48	82322.84	637165.11	596053.0	532.48	0.53	1.23E+06	1.60E+06	
11	692950.5	543.92	84446.61	721611.73	608503.9	543.92	0.54	1.33E+06	1.50E+06	
12	705401.4	553.69	86260.92	807872.65	619140.5	553.69	0.55	1.43E+06	1.41E+06	
13	716038.0	562.04	87810.85	895683.50	628227.2	562.04	0.56	1.52E+06	1.31E+06	
14	725124.7	569.17	89134.93	984818.43	635989.7	569.17	0.57	1.62E+06	1.21E+06	
15	732887.2	575.26	90266.07	1075084.49	642621.2	575.26	0.58	1.72E+06	1.12E+06	
16	739518.7	580.47	91232.38	1166316.88	648286.3	580.47	0.58	1.82E+06	1.02E+06	
17	745183.8	584.92	92057.89	1258374.76	653125.9	584.92	0.58	1.91E+06	9.23E+05	

Table A-3. Agent Concentration in Ventilated Air (Continued)

Time (min)	Amount in Room Air Before Exhaust after Elapsed Time from Spill (mg)	Average Concentration in Room (mg/m^3)	Amount Transferred to Carbon Filter in the Selected Time Interval (mg)	Total Amount Transferred to Carbon Filter (mg)	Amount Left in Room (mg)	Concentration Entering Filter (mg/m^3)	Concentration Leaving Filter (mg/m^3)	Amount in Room Gas and Total Amount Transferred to Carbon Filter (mg)	Amount Left in Pool (mg)	
18	750023.4	588.72	92763.10	1351137.86	657260.3	588.72	0.59	2.01E+06	8.27E+05	
19	754157.8	591.96	93365.55	1444503.42	660792.3	591.96	0.59	2.11E+06	7.30E+05	
20	757689.8	594.73	93880.22	1538383.64	663809.6	594.73	0.59	2.20E+06	6.33E+05	
21	760707.1	597.10	94319.89	1632703.53	666387.2	597.10	0.60	2.30E+06	5.36E+05	
22	763284.7	599.12	94695.49	1727399.02	668589.2	599.12	0.60	2.4E+06	4.39E+05	
23	765486.7	600.85	95016.36	1822415.38	670470.3	600.85	0.60	2.49E+06	3.42E+05	
24	767367.9	602.33	95290.48	1917705.86	672077.4	602.33	0.60	2.59E+06	2.45E+05	
25	768974.9	603.59	95524.65	2013230.51	673450.2	603.59	0.60	2.69E+06	1.48E+05	
26	770347.7	604.67	95724.70	2108955.20	674623.0	604.67	0.60	2.78E+06	5.14E+04	Maximum conc. In room before cleanup
27	725997.1	569.86	95895.60	2204850.80	630101.5	569.86	0.57	2.84+06	4.66E-10	
28	630101.5	494.59	90374.67	2295225.47	539726.8	494.59	0.49	2.84E+06	0.00E+00	All liquid evaporated
29	539726.8	423.65	78437.25	2373662.72	461289.6	423.65	0.42	2.84E+06	0.00E+00	
30	461289.6	362.08	67187.09	2440849.82	394102.5	362.08	0.36	2.84E+06	0.00E+00	
31	394102.5	309.34	57422.95	2498272.77	336679.5	309.34	0.31	2.84E+06	0.00E+00	
32	336679.5	264.27	49059.26	2547332.03	287620.3	264.27	0.26	2.84E+06	0.00E+00	
33	287620.3	225.76	41911.05	2589243.09	245709.2	225.76	0.23	2.84E+06	0.00E+00	
34	245709.2	192.86	35803.98	2625047.07	209905.2	192.86	0.19	2.84E+06	0.00E+00	
35	209905.2	164.76	30586.75	2655633.82	179318.5	164.76	0.16	2.84E+06	0.00E+00	
36	179318.5	140.75	26129.74	2681763.56	153188.8	140.75	0.14	2.84E+06	0.00E+00	
37	153188.8	120.24	22322.20	2704085.76	130866.6	120.24	0.12	2.84E+06	0.00E+00	
38	130866.6	102.72	19069.47	2723155.23	111797.1	102.72	0.10	2.84E+06	0.00E+00	
39	111797.1	87.75	16290.73	2739445.96	95506.4	87.75	0.09	2.84E+06	0.00E+00	
40	95506.4	74.97	13916.89	2753362.86	81589.5	74.97	0.07	2.84E+06	0.00E+00	
41	81589.5	64.04	11888.97	2765251.82	69700.5	64.04	0.06	2.84E+06	0.00E+00	
42	69700.5	54.71	10156.54	2775408.36	59543.9	54.71	0.05	2.84E+06	0.00E+00	
43	59543.9	46.74	8676.56	2784084.93	50867.4	46.74	0.05	2.84E+06	0.00E+00	
44	50867.4	39.93	7412.24	2791497.17	43455.1	39.93	0.04	2.84E+06	0.00E+00	
45	43455.1	34.11	6332.15	2797829.32	37123.0	34.11	0.03	2.84E+06	0.00E+00	
46	37123.0	29.14	5409.45	2803238.77	31713.5	29.14	0.03	2.84E+06	0.00E+00	

Table A-3. Agent Concentration in Ventilated Air (Continued)

Time (min)	Amount in Room Air Before Exhaust after Elapsed Time from Spill (mg)	Average Concentration in Room (mg/m^3)	Amount Transferred to Carbon Filter in the Selected Time Interval (mg)	Total Amount Transferred to Carbon Filter (mg)	Amount Left in Room (mg)	Concentration Entering Filter (mg/m^3)	Concentration Leaving Filter (mg/m^3)	Amount in Room Gas and Total Amount Transferred to Carbon Filter (mg)	Amount Left in Pool (mg)	
47	31713.5	24.89	4621.20	2807859.97	27092.3	24.89	0.02	2.84E+06	0.00E+00	
48	27092.3	21.27	3947.81	2811807.78	23144.5	21.27	0.02	2.84E+06	0.00E+00	
49	23144.5	18.17	3372.55	2815180.33	19772.0	18.17	0.02	2.84E+06	0.00E+00	
50	19772.0	15.52	2881.11	2818061.44	16890.9	15.52	0.02	2.84E+06	0.00E+00	
51	16890.9	13.26	2461.29	2820522.73	14429.6	13.26	0.01	2.84E+06	0.00E+00	
52	14429.6	11.33	2102.63	2822625.36	12326.9	11.33	0.01	2.84E+06	4.66E-10	
53	12326.9	9.68	1796.25	2824421.61	10530.7	9.68	0.01	2.84E+06	0.00E+00	Conc. below IDLH in room (<10 mg/m^3)
54	10530.7	8.27	1534.50	2825956.11	8996.2	8.27	0.01	2.84E+06	0.00E+00	
55	8996.2	7.06	1310.90	2827267.01	7685.3	7.06	0.01	2.84E+06	0.00E+00	
56	7685.3	6.03	1119.88	2828386.89	6565.4	6.03	0.01	2.84E+06	0.00E+00	
57	6565.4	5.15	956.69	2829343.58	5608.7	5.15	0.01	2.84E+06	0.00E+00	
58	5608.7	4.40	817.29	2830160.87	4791.4	4.40	0.00	2.84E+06	0.00E+00	
59	4791.4	3.76	698.19	2830859.06	4093.2	3.76	0.00	2.84E+06	0.00E+00	
60	4093.2	3.21	596.46	2831455.52	3496.8	3.21	0.00	2.84E+06	0.00E+00	Cleanup Starts
61	3496.8	2.74	509.54	2831965.06	2987.3	2.74	0.00	2.84E+06	0.00E+00	
62	2987.3	2.34	435.29	2832400.35	2552.0	2.34	0.00	2.84E+06	0.00E+00	
63	2552.0	2.00	371.86	2832772.22	2180.1	2.00	0.00	2.84E+06	0.00E+00	
64	2180.1	1.71	317.68	2833089.89	1862.4	1.71	0.00	2.84E+06	0.00E+00	
65	1862.4	1.46	271.39	2833361.28	1591.0	1.46	0.00	2.84E+06	0.00E+00	
66	1591.0	1.25	231.84	2833593.12	1359.2	1.25	0.00	2.84E+06	0.00E+00	
67	1359.2	1.07	198.06	2833791.18	1161.1	1.07	0.00	2.84E+06	0.00E+00	
68	1161.1	0.91	169.20	2833960.38	991.9	0.91	0.00	2.84E+06	0.00E+00	
69	991.9	0.78	144.54	2834104.92	847.4	0.78	0.00	2.84E+06	0.00E+00	
70	847.4	0.67	123.48	2834228.40	723.9	0.67	0.00	2.84E+06	0.00E+00	
71	723.9	0.57	105.49	2834333.88	618.4	0.57	0.00	2.84E+06	0.00E+00	
72	618.4	0.49	90.12	2834424.00	528.3	0.49	0.00	2.84E+06	0.00E+00	
73	528.3	0.41	76.98	2834500.98	451.3	0.41	0.00	2.84E+06	0.00E+00	
74	451.3	0.35	65.77	2834566.75	385.6	0.35	0.00	2.84E+06	0.00E+00	
75	385.6	0.30	56.18	2834622.93	329.4	0.30	0.00	2.84E+06	0.00E+00	
76	329.4	0.26	48.00	2834670.93	281.4	0.26	0.00	2.84E+06	0.00E+00	
77	281.4	0.22	41.00	2834711.93	240.4	0.22	0.00	2.84E+06	0.00E+00	
78	240.4	0.19	35.03	2834746.96	205.4	0.19	0.00	2.84E+06	0.00E+00	

Table A-3. Agent Concentration in Ventilated Air (Continued)

Time (min)	Amount in Room Air Before Exhaust after Elapsed Time from Spill (mg)	Average Concentration in Room (mg/m^3)	Amount Transferred to Carbon Filter in the Selected Time Interval (mg)	Total Amount Transferred to Carbon Filter (mg)	Amount Left in Room (mg)	Concentration Entering Filter (mg/m^3)	Concentration Leaving Filter (mg/m^3)	Amount in Room Gas and Total Amount Transferred to Carbon Filter (mg)	Amount Left in Pool (mg)	
79	205.4	0.16	29.92	2834776.88	175.4	0.16	0.00	2.84E+06	0.00E+00	
80	175.4	0.14	25.56	2834802.45	149.9	0.14	0.00	2.84E+06	0.00E+00	
81	149.9	0.12	21.84	2834824.28	128.0	0.12	0.00	2.84E+06	0.00E+00	
82	128.0	0.10	18.66	2834842.94	109.4	0.10	0.00	2.84E+06	0.00E+00	
83	109.4	0.09	15.94	2834858.88	93.4	0.09	0.00	2.84E+06	0.00E+00	
84	93.4	0.07	13.62	2834872.49	79.8	0.07	0.00	2.84E+06	0.00E+00	
85	79.8	0.06	11.63	2834884.12	68.2	0.06	0.00	2.84E+06	0.00E+00	
86	68.2	0.05	9.94	2834894.06	58.3	0.05	0.00	2.84E+06	0.00E+00	
87	58.3	0.05	8.49	2834902.55	49.8	0.05	0.00	2.84E+06	0.00E+00	
88	49.8	0.04	7.25	2834909.80	42.5	0.04	0.00	2.84E+06	0.00E+00	
89	42.5	0.03	6.19	2834915.99	36.3	0.03	0.00	2.84E+06	0.00E+00	
90	36.3	0.03	5.29	2834921.29	31.0	0.03	0.00	2.84E+06	0.00E+00	
91	31.0	0.02	4.52	2834925.81	26.5	0.02	0.00	2.84E+06	0.00E+00	
92	26.5	0.02	3.86	2834929.67	22.6	0.02	0.00	2.84E+06	0.00E+00	
93	22.6	0.02	3.30	2834932.97	19.3	0.02	0.00	2.84E+06	0.00E+00	
94	19.3	0.02	2.82	2834935.79	16.5	0.02	0.00	2.84E+06	0.00E+00	
95	16.5	0.01	2.41	2834938.20	14.1	0.01	0.00	2.84E+06	0.00E+00	
96	14.1	0.01	2.06	2834940.25	12.1	0.01	0.00	2.84E+06	0.00E+00	
97	12.1	0.01	1.76	2834942.01	10.3	0.01	0.00	2.84E+06	0.00E+00	
98	10.3	0.01	1.50	2834943.51	8.8	0.01	0.00	2.84E+06	0.00E+00	
99	8.8	0.01	1.28	2834944.79	7.5	0.01	0.00	2.84E+06	0.00E+00	
100	7.5	0.01	1.10	2834945.89	6.4	0.01	0.00	2.84E+06	0.00E+00	
101	6.4	0.01	0.94	2834946.83	5.5	0.01	0.00	2.84E+06	0.00E+00	
102	5.5	0.00	0.80	2834947.62	4.7	0.00	0.00	2.84E+06	0.00E+00	Conc. in the room is near zero.

CALCULATION COVER SHEET

Calculation Number: RSA-HS CALC – 1
Revision Number:
Page 1 of 11

Title: **Calculation of HS Concentration in Ventilated Air from a Catastrophic Spill**

Project Identification Number:

Key Words: HS, Pool Evaporation, Catastrophic Spill, Ventilation

Charge Number: 203025.01.001.0197.515

Purpose:

The primary purpose of these calculations was to determine sulfur mustard (HS) concentration in ventilation air from an enclosure with a catastrophic spill of the liquid portion of 11.7 lbs of HS in the munition. The liquid portion is dependent on the amount of heel in the munition. It was also intended to determine the maximum amount of liquid spill to limit concentration in ventilated air below the immediately dangerous to life and health (IDLH) for HS with this amount of spill.

Summary of Results:

The calculations determined that the maximum concentration of HS in ventilated air with 5,600 cubic feet per minute (cfm) flow and 7.6 lbs of spill would be 2.28 milligrams per cubic meter (mg/m^3). The amount of minimum spill required reaching IDLH concentration of 0.7 mg/m^3 in the enclosure was estimated to be 2.33 lbs of HS.

Name (print or type):	Signature:	Date:
Originator(s):		
Jay K. Shah		9-4-12
Reviewed by:		
Richard Travis		9-4-12
DM/Responsible Manager:		

CALCULATION REVISION LOG

Revision	Affected Pages	Reason for Revision	Description of Revision:
		Original Issue	

CALCULATION TABLE OF CONTENTS

1.0 Introduction 5
2.0 Input Data 5
3.0 Assumptions 5
4.0 Analytical Methods and Calculations 6
5.0 Results 10
6.0 Conclusions 11
7.0 References 11

Appendix – A for Excel Spreadsheet Tables A-1

Table A-1 Catastrophic Spill Scenario A-2
Table A-2 Vapor Pressure Calculations A-4
Table A-3 Volatility Calculations A-6
Table A-4 Evaporation Rates A-7
Table A-5 Agent Concentration in Ventilated Air A-13

Computer Programs Used

Name	Version #	Configuration Control Version?		If NO, Description on Page/in Reference
Microsoft Office Excel 2003	11.6355.6408	YES	NO	
		YES	NO	
		YES	NO	
		YES	NO	
		YES	NO	

CALCULATION CHECKLIST

Reviewers:	Signature:	Date:
_____	_____	_____
_____	_____	_____

1.	Is the subject and/or purpose clearly stated?	YES	NO	
2.	Are the required input data and their references provided?	YES	NO	
3.	Are the assumptions clearly identified, valid, and consistent with the calculation purpose?	YES	NO	NA
4.	Are the analytical methods clearly identified?	YES	NO	NA
5.	Are the design inputs utilized appropriately?	YES	NO	
6.	Are the versions of the computer programs used identified?	YES	NO	NA
7.	Are sample input listings for all computer programs documented in the calculation?	YES	NO	NA
8.	Are the results and conclusions clearly stated?	YES	NO	
9.	Are the results consistent with expected results?	YES	NO	

If NO to any of the above, provide sheet number(s) with justification:

_____

_____

REVIEWER'S COMMENTS AND REVIEW METHOD USED (Check all that apply):

_____

_____

- ☐ Used alternative method (attached) to do calculation
- ☐ Compared results to other similar calculations
- ☐ Spot-checked calculations
- ☐ Reviewed spreadsheet formulas
- ☐ Examined inputs and followed analytical method through all steps
- ☐ Verified sources of input and analytical methods
- ☐ Considered assumptions in light of calculation purpose
- ☐ Recalculated all calculations
- ☐ Evaluated results against expectations
- ☐ Compared conclusion and summary to results in main body of calculation

Continued on additional sheets? YES NO

Number of additional sheets for reviewer's comments _____

CALCULATION SHEET

1.0 Introduction

The Explosive Destruction System (EDS) can process a 155mm projectile containing 11.7 lbs of HS. The process hazard analysis (PHA) needs to evaluate the hazards associated with a catastrophic event of a liquid portion (7.6 lbs) total amount of HS spill from the 155mm projectile. It is necessary to carry out calculations for agent HS concentration in ventilated air to determine the risk for the workers and to establish personal protective equipment (PPE) requirements.

2.0 Input Data

The following input data were required for the calculations:

Agent - Sulfur Mustard	HS	
Molecular Weight	159	
Room Temperature	30	°C
Boiling Point of Agent	217	°C
Specific Heat of Agent	N/A	J/(kg °C)
Latent Heat of Vaporization	N/A	J/kg
v.p. @ 30°C	0.161101	mmHg
	3.12E-03	psia
	2.15E-02	kPa
Quantity of Total Amount in Munition	1.17E+01	lbs
Amount of Heel	3.50E+01	%
Quantity Spilled	7.61E+00	lb
	3.45E+06	mg
Initial Amount of Chemical in Enclosure Air	0.00E+00	mg
Immediately Dangerous to Life and Health (IDLH)	0.7	mg/m^3
Source Emission Limit (SEL)	0.03	mg/m^3
Short-Term Exposure Limit (STEL)	0.003	mg/m^3
Alarm Level	0.0027	mg/m^3

3.0 Assumptions

The following assumptions were made for these calculations:

- Liquid pool thickness is 0.1 centimeter (cm).
- Evaporation transfer rate is 0.10 meter/per minute (m/min) for HS.

4.0 Analytical Methods and Calculations

Excel spreadsheets were used to calculate the following:

- Cross-sectional area of the enclosure
- Volume of the enclosure
- Air or wind velocity through the enclosure
- Number of air changes per hour through the enclosure
- Spilled liquid pool area
- HS vapor pressure at 30°C
- HS volatility
- Evaporation rates by five different methods
- Maximum agent concentration
- Time to reach maximum concentration
- Minimum time required to evaporate entire liquid pool
- Minimum required amount of agent spill to reach IDLH concentration.

A. Cross-Sectional Area

Cross-sectional area was calculated from the enclosure dimensions. The rectangular portion at the bottom was calculated by multiplying width and height of the rectangular base. The cross area for the triangular portion for the roof was calculated by multiplying one-half of the width by the gable height. Both the areas were added to get the total area as shown in table A-1, 750 square feet (sq. ft.).

B. Volume of Enclosure

The volume of enclosure was obtained by multiplying the cross-sectional area with the length of the enclosure. The result was 45,000 cubic feet (cu. ft.) as shown in table A-1.

C. Wind Velocity

Volumetric flow of air was divided by the cross-sectional area to obtain the wind velocity of 0.038 meters per second (m/sec) as shown in table A-1.

D. Number of Air Changes

Air changes per hour for the enclosure were calculated by dividing airflow in cfm by the volume of enclosure in cu. ft. and multiplying the number by 60. Table A-1 shows the number of air changes to be 7 per hour.

E. Pool Area

Initially, volume of liquid is calculated by dividing the amount in lbs by the density of HS in lbs/cu. ft. The result gives volume of HS in cu. ft. The thickness of the pool is assumed to be 0.1 cm. Converting the thickness to feet from cm and

dividing the volume by the thickness in feet provided the pool area in sq. ft. Table A-1 shows the pool area to be 29.2 sq. ft.

F. Vapor Pressure (VP)

VP data at four temperatures are given. A plot was prepared for 1/T vs. log VP as shown in table A-2 to determine the values of the slope of the curve and the intercept on x-axis. The equation for the curve was used to determine the value of VP at 30°C, which was determined to be 0.1611 millimeter of mercury (mmHg) as shown in table A-2.

G. Volatility

The equation used for volatility calculation was as follows:

$$C_{vol} = 16020 * MW * VP / T \quad \ldots\ldots\ldots\ldots\ldots\ldots\ldots\ldots\ldots\ldots (1)$$

Where:
C_{vol} = volatility, mg/m^3
MW = molecular weight
VP = vapor pressure, mmHg
T = temperature, K.

By substituting the given values for each parameter in Equation 1, the volatility was determined to be 1,355.3 mg/m^3 as shown in table A-3.

H. Evaporation Rate

Five different models were used to calculate the evaporation rate to determine the maximum rate. These models are as follows:

- U.S. Environmental Protection Agency (USEPA) Method
- U.S. Air Force Method
- Stiver and Mackay method
- Chemical Stockpile Emergency Preparedness Program (CSEPP) Method
- Tennessee Valley Authority (TVA) Method.

a. USEPA Method

The equation used in this method was:

$$ER = 10.40\ u^{0.78}\ M^{0.667}\ A\ P) / (R\ T) \quad \ldots\ldots\ldots\ldots\ldots\ldots\ldots\ldots\ldots\ldots (2)$$

Where:
E R = evaporation rate, kg/min
u = wind speed just above the pool liquid surface, m/s
M = molecular weight of the pool liquid
A = surface area of the pool

P = vapor pressure of the pool liquid at the pool temperature, kPa
T = pool liquid temperature, K
R = Universal Gas Law constant, 82.05(atm·cm^3) / (gmol·K).

By substituting the given values for each parameter in Equation 2, the evaporation rate was determined to be 5.6 E-5 kilograms per minute (kg/min) or 56 milligrams per minute (mg/min) as shown in table A-4.

b. U.S. Air Force Method

The equation used in this method was:

$$E = 4.161\ E\text{-}5\ u^{0.75}\ T_F\ M\ (P_s / P_h) \quad \ldots\ldots\ldots\ldots\ldots\ldots\ldots\ldots\ldots\ldots\ldots\ldots\ldots\ldots \quad (3)$$

Where:
E = evaporation flux, kg/min/m^2
u = wind speed, m/s
T_F = pool liquid temperature correction factor
M = pool liquid molecular weight
P_s = pool liquid vapor pressure at ambient temperature, mmHg
P_h = hydrazine vapor pressure at ambient temperature, mmHg
T_A = ambient temperature, K
T_P = pool liquid temperature, °C.

If T_P = 0°C or less, then T_F = 1.0 …… …… (4)
If T_P > 0°C, then $T_F = 1.0 + 0.0043T_P^2$ …… (5)
$P_h = 760 \exp (65.3319 - (7245.2 / T_A) - (8.22 \ln T_A) + (6.1557\ E\text{-}3) * T_A)$……. (6)

T_F was calculated using the given value of T_P using Equation 5 and P_h was calculated using the given value of T_A in Equation 6. By substituting the values for each parameter in Equation 3, the evaporation flux was determined to be 2.31 E-5 kg/min/m^2 as shown in table A-4. Multiplying this value by the pool area in square meters (m^2) and converting kilograms to milligrams, the rate was determined to be 63 mg/min.

c. Stiver and Mackay Method

The equations used in this method were as follows:

$$E = k\ P\ M / (R\ T_A) \quad \ldots\ldots\ldots\ldots\ldots\ldots\ldots\ldots\ldots\ldots\ldots\ldots\ldots\ldots\ldots\ldots \quad (7)$$
$$k = 0.002u \quad \ldots\ldots\ldots\ldots\ldots\ldots\ldots\ldots\ldots\ldots\ldots\ldots\ldots\ldots\ldots\ldots \quad (8)$$

Where:
E = evaporation flux (rate), kg/min/m^2
k = mass transfer coefficient, m/s
P = pool liquid vapor pressure at ambient temperature, Pa
M = pool liquid molecular weight
R = Universal Gas Law constant, 8314.5 (Pa·m^3) / (kgmol·K)

u = wind speed, m/s
T_A = ambient temperature, K.

The mass transfer coefficient (k) was determined using the wind speed in Equation 8. By substituting the values for each parameter in Equation 7, the evaporation flux was determined to be 6.17E-06 kg/min/m^2 as shown in table A-4. Multiplying this value by the pool area in m^2 and converting kilograms to milligrams, the rate was determined to be 17 mg/min.

d. CSEPP Method

The equation used in this method was:

$$E = C_{vol} V_{evap} \qquad \ldots\ldots\ldots\ldots\ldots\ldots\ldots\ldots\ldots\ldots\ldots\ldots \quad (9)$$

Where:
E = evaporative flux (rate), mg/m^2/min
C_{vol} = volatility of the liquid, mg/m^3
V_{evap} = evaporation transfer rate, m/min.

By substituting the values for each parameter in Equation 9, the evaporation flux was determined to be 135.5 mg/min/m^2 as shown in table A-4. Multiplying this value by the pool area in m^2, the rate was determined to be 362 mg/min.

e. TVA Method

The equation used in this method was:

$$ER = (0.284\ U^{0.78}\ MW^{0.67}\ A\ VP) / (82.05\ T) \qquad \ldots\ldots\ldots\ldots\ldots\ldots \quad (10)$$

Where:
ER = evaporation rate, lb/min
U = wind speed, m/sec
MW = pool liquid molecular weight
A = surface area of the pool
VP = vapor pressure, mmHg
T = temperature, K.

By substituting the values for each parameter in Equation10, the evaporation rate was determined to be 1.23E-04 lb/min as shown in table A-4. This value was converted to 56 mg/min using the proper conversion factor for converting pounds to milligrams.

I. Maximum Concentration

A stepwise approach was used to calculate the maximum concentration of agent in the enclosure, applying mass balance between the amount evaporated in a time interval of 1 minute and the resulting concentration in the enclosure and mass

leaving in the exhaust air. This procedure was repeated until a maximum concentration in the enclosure was achieved. This concentration was determined to be 2.28 mg/m^3 as shown in table A-5.

J. Time to Reach Maximum Concentration in Enclosure

Using the above stepwise approach, the minimum time required to achieve the maximum concentration was found to be 43 minutes as shown in table A-5.

K. Minimum Time to Evaporate Pool

Dividing the amount of agent in the pool by the maximum evaporation rate, the minimum time was determined to be 159 hours as shown in table A-1.

L. Maximum Amount of Agent to Limit Concentration to < IDLH in Room

The maximum amount of agent to limit concentration in the enclosure to below the IDLH was determined by multiplying the ratio of IDLH concentration (0.7 mg/m^3) with the maximum concentration (2.28 mg/m^3) with the original amount of liquid spill (7.6 lbs). The result was 2.33 lbs as shown in table A-1.

M. Maximum Concentration in Stack Emissions

The maximum concentration in the stack emissions were calculated by the same stepwise approach described previously in paragraphs I and J. Table A-5 shows the maximum concentration leaving the Air Filtration System (AFS) filter is 0.0023 mg/m^3, which is less than the monitoring alarm level of 0.0027 mg/m^3.

5.0 Results

- The evaporation rates from the five models are summarized in table A-1 and the maximum rate from these five values is 362 mg/min.
- The maximum concentration of HS in the enclosure is 2.28 mg/m^3, which exceeds the IDLH value of 0.7 mg/m^3.
- The time required to reach the maximum concentration in the enclosure is 43 minutes.
- The minimum time required to evaporate the entire spilled amount of 7.6 lbs of HS is 159 hours.
- The maximum amount of agent spill to limit the concentration in the enclosure to below IDLH is 2.33 lbs.
- The maximum concentration in the stack emissions is 0.0023 mg/m^3, which is less than the stack emission limit.

6.0 Conclusions

The conclusion from these calculations is that 7.6 lbs of liquid HS spill causes the concentration in the enclosure to exceed the IDLH value, but stack emissions are below the short-term exposure limit (STEL) value of 0.003 mg/m^3. The maximum amount of spill is estimated to be 2.33 lbs of HS liquid spill to avoid exceeding IDLH level in the enclosure.

7.0 References

1. U.S. Environmental Protection Agency (USEPA) and Federal Emergency Management Agency (FEMA), "Technical Guidance for Hazards Analysis," December 1987 [Equation (7), Section G-2, Appendix G. Available at http://yosemite.epa.gov/oswer/ceppoweb.nsf/vwResourcesByFilename/tech.pdf / $File/tech.pdf]

2. USEPA, "Risk Management Program Guidance For Offsite Consequence Analysis," Publication EPA-550-B-99-009, April 1999. [Equation (D-1), Section D.2.3, and Equation (D-7), Section D.6, Appendix D]. Available at http://yosemite.epa.gov/oswer/ceppoweb.nsf/

3. FEMA, U.S. Dept. of Transportation, and USEPA, *Handbook of Chemical Hazard Analysis Procedures*, 1989.

4. Stiver, W. and D. Mackay, "A Spill Hazard Ranking System For Chemicals," Environment Canada First Technical Spills Seminar, Toronto, Canada, 1993.

5. Fedele, P., P. Georgopoulos, P. Shade, P. Lioy, M. Hodgson, and M. Brown, *In-hospital Response to External Chemical Emergencies: Personal Protective Equipment, Training, Site Operations Planning, and Medical Programs*, Para. 3.5, pg. 11, 15 April 2003.

6. Tennessee Valley Authority (TVA), Letter to Mr. Joe Daven PBA, Subject: *Supplemental Calculations*, 13 April 2001.

APPENDIX – A

EXCEL SPREADSHEET TABLES FOR RSA-HS CALCULATIONS

Table A-1. Catastrophic Spill Scenario

Catastrophic Spill Scenario

Input Data						
Agent - Sulfur Mustard	HS					
Molecular Weight	159					
Room Temperature	30	°C				
Boiling Point of Agent	217	°C				
Specific Heat of Agent	N/A	J/(kg °C)				
Latent Heat of Vaporization	N/A	J/kg				
v.p. @ 30°C	0.161101	mmHg				
	3.12E-03	psia				
	2.15E-02	kPa				
Quantity of Total Amount in Munition	1.17E+01	lbs				
Amount of Heel	3.50E+01	%				
Quantity Spilled	7.61E+00	lb				
	3.45E+06	mgs				
Initial Amount of Chemical in Enclosure Air	0.00E+00	mgs				
Immediately Dangerous to Life or Health (IDLH)	0.7	mg/m^3				
Source Emission Limit (SEL)	0.03	mg/m^3				
Short-Term Exposure Limit (STEL)	0.003	mg/m^3				
Alarm Level	0.0027	mg/m^3				
EDS Enclosure Volume and Cross-Sectional Area						
Length	60	ft				
Height to Peak	23.4	ft				
Height to Break in Roof Line	14.1	ft				
Gable Height	9.3	ft				
Width	40	ft				
Gable Slope	25	degrees				

Table A-1. Catastrophic Spill Scenario (Continued)

Volume of Enclosure	45,000	cu.ft	0.0283	m^3/cu.ft	1274	m^3
Cross-Sectional Area	750	sq.ft.	0.093	m^2/sq.ft.	69.675	m^2
Air Changes						
Wind Velocity (u)	0.038	m/sec				
Ventilation Rate	5,600	(cfm)	2.64	(m^3/sec)	158.6	(m^3/min)
Air Changes (a.c./hr)	7					
Pool Area						
Density of Agent	79.28	lb/ft^3				
Volume of Agent	0.096	ft^3	0.00272	m^3		
Thickness of Pool	0.039	inch	0.1	cm		
Pool Area	29.24	sq.ft.	2.72	m^2		
Evaporation Rate and Time						
EPA Method	56	mg/min				
USAF Method	63	mg/min				
Stiver & Mackay Method	17	mg/min				
CSEPP Method (indoor calm air)	362	mg/min				
TVA Method	56	mg/min				
Maximum Evap. Rate	362	mg/min				
Maximum Room Concentration Before Cleanup Starts	2.28	mg/m^3				
Maximum Agent Spill to Limit Enclosure Concentration Below IDLH Before Cleanup Starts	2.33	lbs				
Shortest Time to Evaporate Entire Pool	159	hours				
Time to Reach Maximum Room Concentration	43	min				
Agent Exhausted Through Filter in 1 Hour	0.0192	kg				

Table A-2. Vapor Pressure Calculations

Vapor Pressure Calculations

Chemical	HS				
t (deg C)	T (K)	1/T	Log VP	VP mmHg	
20	293.15	0.003411	-1.14267	0.072	known VP at given temp
25	298.15	0.003354	-0.95861	0.11	known VP at given temp
40	313.15	0.003193	-0.45593	0.35	known VP at given temp
217	490.15	0.00204	2.880814	760	VP at boiling point

After filling in yellow cells above, the chart will reflect the log of VP versus 1/temp K. Read the equation of the line (upper right hand corner of the chart) in the form of y = mx + b. Enter values for m and b in the spread sheet below along with the temperature(s) you are interested in calculating a VP for. Answers will appear in the green cells.

Enter values for “m” and “b” based on regression line in accompanying chart. Enter temperature in deg C for which you want to know the VP.
Answer will appear in green cell.

VP mmHg	Y	m	b	1/K	Deg C	Deg F
0.16110	-0.792902	-2922.7	8.8482	0.0032987	30	86

Table A-2. Vapor Pressure Calculations (Continued)

By plotting the log of vapor pressure against 1/temperature in K, you get a straight line. Therefore, if you know the vapor pressure for a chemical at a few different temperatures, it is possible to interpolate the vapor pressure at any temperature. One point that should always be included is the vapor pressure of 760 mmHg at the boiling point of the chemical.

Chart automatically updates as temperature and known VP data are entered into upper table.

The equation for Y is taken from linear regression line in graph.
"m" "b"

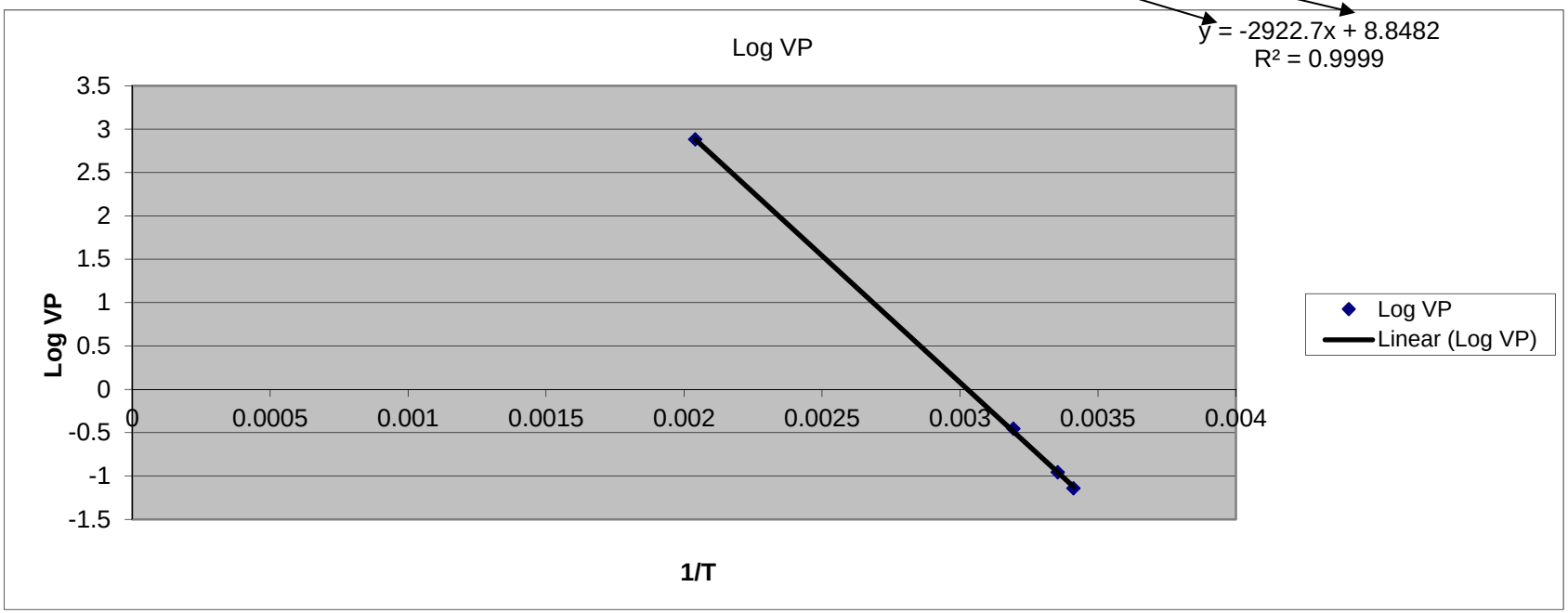

Table A-3. Volatility Calculations

Use this calculation to estimate the volatility of a chemical in a circumstance where empirical data are not available.

C_{vol} = 16020*MW*VP/T

Chemical	HS				
C_{vol}	Volatility	1355.3	mg/m^3		
MW	Molecular weight	159.08			
VP	Vapor pressure	0.161	mmHg	0.021	kPa
T	Room temperature	303	K	30	°C

Table A-4. Evaporation Rates

Chemical **HS**

1. USEPA Method

$$ER = (10.40 \times u^{0.78} \times M^{0.667} \times A \times P) / (R \times T)$$

Where:

t	room temperature	30	°C		
ER	evaporation rate	5.59E-05	kg/min	55.90	mg/min
u	wind speed just above the pool liquid surface	0.0379	m/s		
M	molecular weight of the pool liquid	159.08	mol. wt.		
A	surface area of the pool liquid	2.716	m^2		
P	vapor pressure of the pool liquid at the pool temperature	2.15E-02	kPa	0.1611	mmHg
T	pool liquid temperature (°C + 273.15)	303.15	K		
R	Universal Gas Law constant	82.05	$(atm \cdot cm^3)/(gmol \cdot K)$		

References:

USEPA and FEMA, "Technical Guidance For Hazards Analysis," December 1987 [Equation (7), Section G-2, Appendix G. Available at http://yosemite.epa.gov/oswer/ceppoweb.nsf/vwResourcesByFilename/tech.pdf/$File/tech.pdf]

USEPA, "Risk Management Program Guidance For Offsite Consequence Analysis," Publication EPA-550-B-99-009, April 1999. [Equation (D-1), Section D.2.3, and Equation (D-7), Section D.6, Appendix D. Available at http://yosemite.epa.gov/oswer/ceppoweb.nsf/]

Table A-4. Evaporation Rates (Continued)

2. U.S. Air Force Method

$$E = 4.161E\text{-}5 \times u^{0.75} \times T_f \times M \times (P_s / P_h)$$
$$ER = E * A$$

Where:

E	evaporation flux	2.312E-05	kg/min/m^2	23.12	mg/min/m^2
u	wind speed	0.0379	m/s		
T_F	pool liquid temperature correction factor	4.87			
M	pool liquid molecular weight	159.08	gmol		
P_s	pool liquid vapor pressure at ambient temperature	0.1611	mmHg	(760 mmHg = 01.3245kPa)	
P_H	hydrazine vapor pressure at ambient temperature	19.310468	mmHg		
T_A	ambient temperature	303.15	K		
T_P	pool liquid temperature, °C				
	If T_P = 0°C or less, then T_F = 1.0	T_P	30	°C	
	If T_P > 0°C, then $T_F = 1.0 + 0.0043T_P^2$	T_F	4.87		
	$P_H = 760\exp(65.3319-(7245.2/T_A)-(8.22\ln T_A)+(6.1557E\text{-}3)*T_A)$	P_H	19.31	mmHg	
A	pool area	2.716	m^2		
ER	evaporation rate	63	mg/min		

Reference:

Federal Emergency Management Agency, U.S. Dept. of Transportation, and U.S. Environmental Protection Agency, *Handbook of Chemical Hazard Analysis Procedures*, 1989.

Table A-4. Evaporation Rates (Continued)

3. Stiver and Mackay Method

$E = k \times P \times M / (R \times T_A)$ (This calculation uses $E=60kPM/(RT_A)$ to get similar units to the USEPA and USAF calculations)

Where:

E	evaporation flux (rate)	6.171E-06	$kg/min/m^2$	6.171	$mg/min/m^2$
k	mass transfer coefficient (k=.002u)	7.587E-05	m/s		
P	pool liquid vapor pressure at ambient temperature	21.478	Pa		
M	pool liquid molecular weight	159.08	gmol		
R	Universal Gas Law constant	8314.5	$(Pa \cdot m^3)/(kgmol \cdot K)$		
T_A	ambient temperature	303.15	K		
u	wind speed	0.0379361	m/s		
ER	evaporation rate	17	mg/min		

Note:

This model gives a consistently lower value than either the USEPA or USAF model:

Reference:

Stiver, W. and D. Mackay, “A Spill Hazard Ranking System For Chemicals,” Environment Canada First Technical Spills Seminar, Toronto, Canada, 1993.

Table A-4. Evaporation Rates (Continued)

4. CSEPP Method

$$E = C_{vol} \times Vevap$$

Where:

E = dm/dt	evaporative flux (rate)	135.5	$mg/min/m^2$		
C_{vol}	volatility of the liquid	1355.3	mg/m^3		
Vevap	evaporation transfer rate, (use 0.10 m/min for all agents)	0.1	m/min		
ER	evaporation rate	362	mg/min		

Reference:

Fedele P., P. Georgopoulos, P. Shade, P. Lioy, M. Hodgson, and M. Brown, *In-hospital Response to External Chemical Emergencies: Personal Protective Equipment, Training, Site Operations Planning, and Medical Programs*, para. 3.5, pg. 11, 15 April 2003.

Table A-4. Evaporation Rates (Continued)

5. TVA Method

$$ER = (0.284 \times U^{0.78} \times MW^{0.67} \times A \times VP) / (82.05 \times T)$$

Where:

ER	evaporation rate	0.000123	lb/min	56	mg/min
U	wind speed	0.037936	m/sec		
MW	molecular weight	159.08	MW		
A	surface area of pool	28.78	ft^2	2.67	m^2
VP	vapor pressure of spilled material	0.161101	mmHg		
T	temperature of spilled material	303.15	K	30	C
CFM	airflow	5600.00	cfm	2.64	m^3/s
m	mass of spilled material	7.605	lb	3.45	kg
H	hrs to evaporate spilled mass by TVA Method	1030.0	hrs		
den	density of liquid	79.28	lb/ft^3		
depth	depth of pool	0.0033	ft		

Reference:

TVA, Letter to Mr Joe Daven PBA, Subject: *Supplemental Calculations*, 13 April 2001.

Table A-4. Evaporation Rates (Continued)

SUMMARY RESULTS:

Method	Evaporation Rate		Evaporation Time						
EPA Method	56	mg/min	1,027	hrs					
USAF Method	63	mg/min	913	hrs					
Stiver & Mackay Method	17	mg/min	3,382	hrs					
CSEPP Method (indoor calm air)	362	mg/min	159	hrs					
TVA Method	56	mg/min	1,027	hrs					
		Minimum Evaporation Time	1.59E+02	hrs					

Table A-5. Agent Concentration in Ventilated Air

Chemical	**HS**										
Initial Amount in Room Air	0.00	mg									
Initial Conc.	0.00	mg/m^3									
Evaporation Rate	362	mg/min			Ventilation rate	5,600	cfm	2.64	m^3/sec	158.59	m^3/min
Room Cross-Section Area	750	sq.ft.	69.68	m^2	Air velocity	7.5	ft/min	0.038	m/sec	2.28	m/min
Air Changes	7	a.c. /hr	0.12	a.c. /min							
Filter Efficiency	99.9	%									

Time (min)	Total Amount in Room Air Before Exhaust (mg)	Average Concentration in Room Air (mg/m^3)	Amount Exhausted (mg)	Amount Left in Room Air (mg)	Concentration Entering Filter (mg/m^3)	Concentration Leaving Filter (mg/m^3)	
0	0.00	0.00	0	0.00	0.00	0.0000	
1	362	0.28	45.06	316.94	0.28	0.0003	
2	678.94	0.53	84.52	594.42	0.53	0.0005	
3	956.42	0.75	119.06	837.36	0.75	0.0008	IDLH Exceeded in room.
4	1199.36	0.94	149.30	1050.06	0.94	0.0009	
5	1412.06	1.11	175.78	1236.28	1.11	0.0011	
6	1598.28	1.25	198.96	1399.32	1.25	0.0013	
7	1761.32	1.38	219.26	1542.07	1.38	0.0014	
8	1904.07	1.49	237.02	1667.04	1.49	0.0015	
9	2029.04	1.59	252.58	1776.46	1.59	0.0016	
10	2138.46	1.68	266.20	1872.26	1.68	0.0017	
11	2234.26	1.75	278.13	1956.13	1.75	0.0018	
12	2318.13	1.82	288.57	2029.56	1.82	0.0018	
13	2391.56	1.88	297.71	2093.85	1.88	0.0019	
14	2455.85	1.93	305.71	2150.14	1.93	0.0019	
15	2512.14	1.97	312.72	2199.42	1.97	0.0020	
16	2561.42	2.01	318.85	2242.56	2.01	0.0020	
17	2604.56	2.04	324.23	2280.34	2.04	0.0020	
18	2642.34	2.07	328.93	2313.41	2.07	0.0021	

Table A-5. Agent Concentration in Ventilated Air (Continued)

Time (min)	Total Amount in Room Air Before Exhaust (mg)	Average Concentration in Room Air (mg/m^3)	Amount Exhausted (mg)	Amount Left in Room Air (mg)	Concentration Entering Filter (mg/m^3)	Concentration Leaving Filter (mg/m^3)	
19	2675.41	2.10	333.04	2342.37	2.10	0.0021	
20	2704.37	2.12	336.65	2367.72	2.12	0.0021	
21	2729.72	2.14	339.80	2389.91	2.14	0.0021	
22	2751.91	2.16	342.57	2409.34	2.16	0.0022	
23	2771.34	2.18	344.99	2426.36	2.18	0.0022	
24	2788.36	2.19	347.10	2441.25	2.19	0.0022	
25	2803.25	2.20	348.96	2454.29	2.20	0.0022	
26	2816.29	2.21	350.58	2465.71	2.21	0.0022	
27	2827.71	2.22	352.00	2475.71	2.22	0.0022	
28	2837.71	2.23	353.25	2484.46	2.23	0.0022	
29	2846.46	2.23	354.34	2492.12	2.23	0.0022	
30	2854.12	2.24	355.29	2498.83	2.24	0.0022	
31	2860.83	2.25	356.13	2504.71	2.25	0.0022	
32	2866.71	2.25	356.86	2509.85	2.25	0.0023	
33	2871.85	2.25	357.50	2514.35	2.25	0.0023	
34	2876.35	2.26	358.06	2518.29	2.26	0.0023	
35	2880.29	2.26	358.55	2521.74	2.26	0.0023	
36	2883.74	2.26	358.98	2524.76	2.26	0.0023	
37	2886.76	2.27	359.35	2527.41	2.27	0.0023	
38	2889.41	2.27	359.68	2529.73	2.27	0.0023	
39	2891.73	2.27	359.97	2531.75	2.27	0.0023	
40	2893.75	2.27	360.22	2533.53	2.27	0.0023	
41	2895.53	2.27	360.45	2535.08	2.27	0.0023	
42	2897.08	2.27	360.64	2536.44	2.27	0.0023	
43	2898.44	2.28	360.81	2537.64	2.28	0.0023	Maximum Conc. Reached before Cleanup

Table A-5. Agent Concentration in Ventilated Air (Continued)

Time (min)	Total Amount in Room Air Before Exhaust (mg)	Average Concentration in Room Air (mg/m^3)	Amount Exhausted (mg)	Amount Left in Room Air (mg)	Concentration Entering Filter (mg/m^3)	Concentration Leaving Filter (mg/m^3)	
44	2899.64	2.28	360.96	2538.68	2.28	0.0023	
45	2900.68	2.28	361.09	2539.59	2.28	0.0023	
46	2901.59	2.28	361.20	2540.39	2.28	0.0023	
47	2902.39	2.28	361.30	2541.09	2.28	0.0023	
48	2903.09	2.28	361.39	2541.70	2.28	0.0023	
49	2903.70	2.28	361.46	2542.24	2.28	0.0023	
50	2904.24	2.28	361.53	2542.71	2.28	0.0023	
51	2904.71	2.28	361.59	2543.12	2.28	0.0023	
52	2905.12	2.28	361.64	2543.48	2.28	0.0023	
53	2905.48	2.28	361.68	2543.80	2.28	0.0023	
54	2905.80	2.28	361.72	2544.07	2.28	0.0023	
55	2906.07	2.28	361.76	2544.32	2.28	0.0023	
56	2906.32	2.28	361.79	2544.53	2.28	0.0023	
57	2906.53	2.28	361.81	2544.71	2.28	0.0023	
58	2906.71	2.28	361.84	2544.87	2.28	0.0023	
59	2906.87	2.28	361.86	2545.02	2.28	0.0023	
60	2907.02	2.28	361.88	2545.14	2.28	0.0023	Cleanup Starts

Total Amt Exhausted Through Filter **0.0192** **Kg/hr**

SECTION E

GROUNDWATER MONITORING SYSTEMS

[40 CFR 270.14(c) and 264.97; AAC 335-14-8-.02(5)(c) and 335-14-5-.06(8)]

The groundwater monitoring requirements apply only to surface impoundments, waste piles, land treatment units, and landfills. The Redstone Arsenal-Explosive Destruction System (RSA-EDS) site will not contain these types of waste management units. Therefore, the groundwater monitoring requirements are not applicable.

1 (This page intentionally left blank.)

SECTION F
PROCEDURES TO PREVENT HAZARDS

F-1 SECURITY [40 CFR 270.14(b)(4) and 264.14; AAC 335-14-8-.02(5)(b)4 and 335-14-5-.02(5)]

This section describes the procedures and equipment that will be located at the Redstone Arsenal Explosive Destruction System (RSA-EDS) site located in Alabama to prevent unknowing entry and minimize the unauthorized entry of persons or livestock. The RSA-EDS site will be situated within the property of Redstone Arsenal (RSA). RSA will provide overall security for the installation. The security measures for the RSA-EDS site are discussed below.

F-1a Security Procedures and Equipment [40 CFR 264.14 and 270.14(b)(4); AAC 335-14-5-.02(5) and 335-14-8-.02(5)(b)4.]

The perimeter of the site will have security fencing and gates. The general security provisions for the RSA-EDS site are in addition to the RSA security provisions for the arsenal and will include the following:

- Warning signs posted at the site perimeter
- Controlled entry point
- Access limited to persons and vehicles displaying appropriate identification badges or paperwork as appropriate
- Two-way radio and/or telephone communication between security personnel, RSA-EDS site personnel, and the Installation Operations Center.

F-1a(1) Twenty-Four Hour Surveillance System [40 CFR 264.14(b)(1); AAC 335-14-5-.02(5)(b)1]

RSA is a high security base where guards are posted at the base on a 24-hour basis. A barrier and entry control will be the primary means of ensuring site security.

F-1a(2) Barrier and Means to Control Entry [40 CFR 264.14(b)(2); AAC 335-14-5-.02(5)(b)2]

F-1a(2)(a) Barrier [40 CFR 264.14(b)(2)(i); AAC 335-14-5-.02(5)(b)2(i)]

The entire RSA-EDS site will be surrounded by security fencing. The integration of general security provisions such as fencing, controlled gates, and guards contributes towards safety and security within the site.

F-1a(2)(b) Means to Control Entry [40 CFR 264.14(b)(2)(ii); AAC 335-14-5-.02(5)(b)2(ii)]

To prevent unknowing or unauthorized entry, personnel access to the RSA-EDS site will be controlled. During operating hours, routine worker access will be controlled through the use of badges and/or sign-in and sign-out rosters to indicate authorized individuals.

Temporary authorization will be given to workers and visitors who will not be onsite full time. Employees, such as electricians, craftsmen, etc., are in this "temporary entry" category. These personnel will be accompanied by an escort during their time within the RSA-EDS site. Visitor access to the RSA-EDS site will require advanced notice that will be documented by specially signed visitor forms. During off-hours, access to the RSA-EDS site will be controlled by locked entrances.

F-1a(3) Warning Signs [40 CFR 264.14(c); AAC 335-14-5-.02(5)(c)]

Warning signs with the text "Danger-Unauthorized Personnel Keep Out" or text indicating only authorized personnel are allowed and unauthorized entry is dangerous will be posted at each entrance of the RSA-EDS site as well as other locations to be seen from any approach. These signs will be easily visible at a distance of 25 feet.

The wording on the signs will be clearly legible, written in English, and indicate that only authorized personnel are allowed to enter the active portion and that entry onto the active portion can be dangerous.

F-2 INSPECTION SCHEDULE [40 CFR 270.14(b)(5) and 264.15; AAC 335-14-8-.02(5)(b)5 and 335-14-5-.02(6)]

F-2a General Inspection Requirements [40 CFR 264.15(a) and (b), 264.33, and 270.14(b)(5); AAC 335-14-5-.02(6)(a) and (b), 335-14-5-.03(4), and 335-14-8-.02(5)(b)5]

The Explosive Destruction System (EDS) units will be inspected according to prescribed inspection schedules designed to detect equipment deterioration and prevent possible equipment malfunctions that will cause a release of hazardous wastes to the environment or pose a threat to human health. The inspection schedule document and inspection logs will be located at the RSA-EDS site. At a minimum, the inspection program will include inspections of the equipment items listed in **Table F-2-1**.[1] Inspection logs and documents will be retained and available at the RSA-EDS site. Examples of inspection forms are provided in **Attachment F-1**.

F-2a(1) Types of Problems [40 CFR 264.15(b)(3); AAC 335-14-5-.02(6)(b)3]

The types of problems to look for during inspections are identified in **Table F-2-1**.

F-2a(2) Frequency of Inspections [40 CFR 264.15(b)(4); AAC 335-14-5-.02(6)(b)4]

Inspection frequency is listed in **Table F-2-1**.

F-2a(3) Schedule of Remedial Action [40 CFR 264.15(c); AAC 335-14-5-.02(6)(c)]

The RSA-EDS site operators will remedy any deterioration or malfunction of equipment or structures found during inspection in a timely manner that ensures the problem does not lead to an environmental or human health hazard.

F-2a(4) Inspection Log [40 CFR 264.15(d); AAC 335-14-5-.02(6)(d)]

Inspection logs and documents will be retained and available at the RSA-EDS site. Examples of inspection forms are provided in **Attachment F-1**.

---

[1] All tables are located at the end of this section.

F-2b Specific Process Inspection Requirements [40 CFR 264.15(b)(4) and 270.14(b)(5); AAC 335-14-5-.02(6)(b)4 and 335-14-8-.02(5)(b)5]

F-2b(1) Container Inspection [40 CFR 264.174; AAC 335-14-5-.09(5)]

The EDS is a container-like transportable treatment system (mounted on a trailer) comprised mainly of a Containment Vessel designed to destroy chemical-filled munitions with or without explosive components. Inspections of the EDS unit(s) will be conducted daily when in use with the checklist provided in **Table F-2-1**. **Table F-2-1** presents the items to be inspected, frequencies, and types of problems. **Attachment F-1** contains examples of inspection forms to ensure compliance as well as to meet any additional requirements needed to protect human health and the environment as specified in the permit. The EDS Waste Transfer Subsystem, a component of an EDS unit, is used to drain liquid and vent vapors from the Containment Vessel as well as drain/pump out liquids from the EDS trailer secondary containment pan and the reagent supply secondary containment pan to liquid waste containers. Four waste containers are used in waste transfer activities during normal operations as described in **Section D** of this permit modification application. The Waste Transfer Subsystem and associated waste containers will be inspected daily when in use as described in **Table F-2-1**.

F-2b(2) Tank System Inspection [40 CFR 264.195; AAC 335-14-5-.10(6)]

The hazardous waste management units addressed in this permit modification application are not tanks. Therefore, the requirements of this section are not applicable.

F-2b(3) Waste Pile Inspection [40 CFR 264.254(b) and 270.18(d); AAC 335-14-5-.12(5)(b) and 335-14-8-.02(9)(d)]

The hazardous waste management units addressed in this permit modification application are not waste piles. Therefore, the requirements of this section are not applicable.

F-2b(4) Surface Impoundment Inspection [40 CFR 270.17(c) and 264.226(b); AAC 335-14-5-.11(7) and 335-14-8-.02(8)(c)]

The hazardous waste management units addressed in this permit modification application are not surface impoundments. Therefore, the requirements of this section are not applicable.

F-2b(5) Incinerators Inspection [40 CFR 264.347(b) through (d); AAC 335-14-5-.15(8)(b) through (d)]

The hazardous waste management units addressed in this permit modification application are not incinerators. Therefore, the requirements of this section are not applicable.

F-2b(6) Landfill Inspection [40 CFR 264.303(b); AAC 335-14-5-.14(4)]

The hazardous waste management units addressed in this permit modification application are not landfills. Therefore, the requirements of this section are not applicable.

F-2b(7) Land Treatment Facility Inspection [40 CFR 264.273(g); AAC 335-14-5-.13(4)(g)]

The hazardous waste management units addressed in this permit modification application are not land treatment units. Therefore, the requirements of this section are not applicable.

F-2b(8) Miscellaneous Unit Inspection [40 CFR 264.602 and 265.377(a)(3); AAC 335-14-5-.24(3) and 335-14-6-.16(8)(a)3]

The EDS is not a miscellaneous treatment unit; therefore, the requirements of this section are not applicable.

F-2b(9) Boilers and Industrial Furnaces Inspections [40 CFR 266.102(a)(2)(ii), 266.111(e)(3), and 264.15; AAC 335-14-07-.08(3), 335-14-7-.08(12), and 335-14-5-.02(6)]

The hazardous waste management units addressed in this permit modification application are not boilers or industrial furnaces burning hazardous waste; therefore, this section is not applicable.

F-2b(10) Containment Building Inspection [40 CFR 264.1101(c)(3) and 264.1101(c)(4); AAC 335-14-5-.30(2)(c)3 and 335-14-5-.30(2)(c)4]

The requirements of this section are not applicable because the hazardous waste management units addressed in this permit modification application are not and will not operate in a containment building.

F-2b(11) Drip Pad Inspection [40 CFR 264.574; AAC 335-14-5-.23(5)]

The requirements of this section are not applicable because the EDS units addressed in this permit modification application will not use or contain drip pads.

F-2b(12) Inspection Procedures for Equipment Leaks [40 CFR 264 Subpart BB; AAC 335-14-5-.28], **Applicability** [40 CFR 264.1050; AAC 335-14-5-.28(c)(1)] **and Waste Analysis** [40 CFR 264.1063(d); AAC 335-14-5-.28(c)(14)]

See **Attachment D-3** for compliance with Subpart BB.

F-2b(13) Inspection Procedures for Tanks, Surface Impoundments, and Containers [40 CFR 264 Subpart CC; AAC 335-14-5-.29]

See **Attachment D-3** for compliance with Subpart CC.

Table F-2-1. Inspection Schedule for EDS Units at RSA-EDS Site

§ 264.15(b)(1) AAC 335-14-5-.02(6)(b)1	Frequency[a] § 264.15(b)(4) AAC 335-14-5-.02(6)(b)4	Types of Problems § 264.15(b)(3) AAC 335-14-5-.02(6)(b)3
EDS Trailer		
Containment Vessel	Daily when in use	Visually inspect exterior, including tubing, hoses, and valves for evidence of corrosion, leakage, or other physical damage such as tears, stresses, gouges, dimples, rips, cracks, loose screws, etc.
	Daily when in use	Visually inspect interior for evidence of physical damage such as gouges and dimples, etc.
	Daily when in use	Conduct inspection and cleaning of sealing surfaces.
	On Day 1 of operation	Conduct Hi-potting test through open vessel door and conduct continuity check of feedthrough and detonator terminal blocks to check for proper functioning.
	On Day 1 of operation	Confirm that a helium leak check for evidence of leakage or other physical damage to the vessel or piping, valves, or instruments connected to vessel door, has been conducted on this unit.
Fire Set	On Day 1 of operation	Conduct test.
EDS Trailer Secondary Containment Pan	Daily when in use	Visually inspect for presence of liquid or evidence of corrosion, leakage, or other physical damage such as cracks, gaps, or holes.
Waste Transfer Subsystem	Daily when in use	Visually inspect hoses and quick disconnects for evidence of physical damage such as tears, rips, and corrosion. Inspect to confirm hose connections are in place; containers are in good condition; secondary containment is present for containers and in good condition; and a minimum two feet aisle space is present.
Lift Assist (EDS Phase 2 unit only)	Daily when in use	Visually check each part of the jib crane for signs of physical damage such as cracking, bending, deformity, and corrosion; check for freedom of rotation; verify operability of all operating mechanisms, such as sheaves, brakes, and locking mechanisms; check that the crane is properly lubricated. Check that there is no visible wear, fray, or kink in the wire rope and no wear on the electric cables. Check that the covers are not cracked; check that the coiled cord is firmly strain relieved at both ends; check that the load does not drift when the brake is engaged; check that the system operates smoothly and does not drift when the system is in the ready state; check for excessive wear of the hook; verify the hook locking pin is in place; check that all hub buttons are tightly seated on housing.

Table F-2-1. Inspection Schedule for EDS Units at RSA-EDS Site (Continued)

§ 264.15(b)(1) AAC 335-14-5-.02(6)(b)1	Frequency[a] § 264.15(b)(4) AAC 335-14-5-.02(6)(b)4	Types of Problems § 264.15(b)(3) AAC 335-14-5-.02(6)(b)3
Environmental Enclosure		
Air Filtration System	Daily when in use	Ensure each unit is functioning and operable; record magnehelic readings on the Daily Checklist.
Communication		
Land Line Telephones, Cellular Telephones, Hand-Held Radios, Throat Microphones/Headsets	Daily when in use	Check for availability and operability.
Alarm Panels (EDS unit)	Daily when in use	Check function and operability of audible/visual alarm.
Closed-Circuit Television System	Daily when in use	Check for availability and operability. Check visual clarity/tilt, pan, and zoom functions.
Security		
Fences	Monthly	Check for integrity, intrusion, or obstruction by vegetation; gaps at fence base.
Warning Signs	Monthly	Check for presence and legibility.
Fire Protection/Safety Equipment		
Fire Extinguishers	Monthly	Check gauge pressure, general condition, and service date.
Personnel Decontamination Station	Daily when operating	Check for adequate decontamination solution supply, direct access, and operability.
Emergency Response Equipment (Spill Kits and Hand Tools)	Daily when operating	Check for sufficient inventory, items in good condition, and expiration dates have not lapsed (where applicable).

Table F-2-1. Inspection Schedule for EDS Units at RSA-EDS Site (Continued)

§ 264.15(b)(1) AAC 335-14-5-.02(6)(b)1	Frequency[a] § 264.15(b)(4) AAC 335-14-5-.02(6)(b)4	Types of Problems § 264.15(b)(3) AAC 335-14-5-.02(6)(b)3
Monitoring		
MINICAMS® and DAAMS (Chemical Agent)	Daily when operating	Visually inspect monitors for physical integrity; check diagnostic indicators on front panel of monitor housing for proper operation; inspect sample lines and connections, ensure heat trace is functional, ensure proper ventilation for exhaust, perform chemical agent challenge test and calibration.
Emergency Backup Power		
Emergency Generators	Monthly	Start unit, check voltage, current, and frequency output regularity and filter differential pressure.

Note:

[a] Inspections of the EDS unit(s) will be conducted in accordance with the checklist during operations and when waste is present. Inspections will not be conducted during periods of temporary closeout or during planned breaks in operating schedule.

AAC = ADEM Administrative Code
DAAMS = Depot Area Air Monitoring System
EDS = Explosive Destruction System

1 (This page intentionally left blank.)

F-3 WAIVER OR DOCUMENTATION OF PREPAREDNESS AND PREVENTION REQUIREMENTS [40 CFR 270.14(b)(6), 264 Subpart C; AAC 335-14-8-.02(5)(b)6 and 335-14-5-.03]

The RSA is not requesting any waivers from the preparedness and prevention requirements of the Alabama Department of Environmental Management Administrative Code Regulation 335-14-5-.03.

F-3a Equipment Requirements [40 CFR 264.32; AAC 335-14-5.03(3)]

F-3a(1) Internal Communications [40 CFR 264.32(a) and 264.34; AAC 335-14-5-.03(3)(a) and 335-14-5-.03(5)]

Internal communications at the RSA-EDS site will consist of cellular and/or landline telephones, intercoms, throat microphones, hand-held radios, and headsets. Communication devices will be available throughout the RSA-EDS site and in all work areas for immediate access and use in the event of emergencies. Cellular and/or landline telephones will be capable of internal and external communications. Throat microphones and headset equipment will be the primary means of communication during operations. Personnel will be alerted of emergencies by hand-held radios or throat microphones/headset unit if wearing personal protective equipment (PPE).

F-3a(2) External Communications [40 CFR 264.32(b); AAC 335-14-5-.03(3)(b)]

Cellular and/or landline telephones will be the primary means for external communication between the RSA-EDS site, the RSA, and surrounding areas. Telephones to the outside area will be located in the RSA-EDS site Command Post.

F-3a(3) Emergency Equipment [40 CFR 264.32(c); AAC 335-14-5-.03(3)(c)]

An inventory of emergency equipment will be maintained at the RSA-EDS site. Portable fire extinguishers and spill kits will be located at the RSA-EDS site. A list of emergency equipment to be available at the RSA-EDS site is provided in **Table G-5-1**, RSA-EDS Site Emergency Equipment.

F-3a(4) Water and Fire Control [40 CFR 264.32(d); AAC 335-14-5-.03(3)(d)]

The primary mechanism for fire control will be fire extinguishers designed for chemical and electrical fires. If water is necessary for fire control, the RSA Fire Department will be contacted.

F-3b Aisle Space Requirements [40 CFR 264.35; AAC 335-14-5-.03(6)]

A minimum of two feet aisle space will be maintained at the RSA-EDS site to allow for unobstructed movement of personnel and fire protection, spill control, and decontamination equipment in response to an emergency.

F-3c Testing and Maintenance of Equipment [40 CFR 264.33; AAC 335-15-5-.03(4)]

Testing and maintenance of preparedness and prevention equipment is described in **Section F-2** of this permit modification application.

F-3d Arrangements with Local Authorities [40 CFR 264.37; AAC 335-15-5-.03(8)]

Details on the agreements with local authorities are provided in **Section G-6** of this permit modification application.

F-4 PREVENTIVE PROCEDURES, STRUCTURES, AND EQUIPMENT

[40 CFR 270.14(b)(8); AAC 335-14-8-.02(5)(b)8]

F-4a Unloading Operations [40 CFR 270.14(b)(8)(i); AAC 335-14-8-.02(5)(b)8(i)]

Recovered munitions or other items will be moved to an Environmental Enclosure by hand or using waste handling equipment, such as hand dolly, forklift, or other moving device. All unloading operations will be conducted by personnel wearing protective clothing appropriate to the area and activity being conducted. The types of protective clothing to be worn at the RSA-EDS site are presented in **Attachment F-2**, Protective Clothing.

F-4b Runoff [40 CFR 270.14(b)(8)(ii); AAC 335-14-8-.02(5)(b)8(ii)]

Waste handling and treatment operations will take place in structures called Environmental Enclosures. Design features, such as ceiling, walls, and impermeable flooring, as well as use of secondary containment pans and pallets, will protect the EDS units from precipitation and will prevent runoff from hazardous waste handling areas to other areas of the RSA-EDS site or the environment. The Environmental Enclosure design features minimize the potential for contaminated runoff to reach other areas. The Environmental Enclosure structure is described in **Attachment D-1** of this permit modification application. Additional engineering controls are described in **Section D** of this permit modification application.

As indicated, any spills that may occur during operations will be contained within secondary containment within an enclosed structure, thus precluding contaminated runoff to reach other areas.

F-4c Prevention of Water Supply Contamination [40 CFR 270.14(b)(8)(iii); AAC 335-14-8-.02(5)(b)8(iii)]

Processing and temporary storage of hazardous waste at the RSA-EDS site will take place in Environmental Enclosures provided with impermeable flooring consisting of a polypropylene or polyethylene liner material that will prevent the downward percolation of wastes or liquids. Additional engineering and administrative controls include the following:

- Each EDS Containment Vessel has a secondary containment pan underneath to collect any liquids that might spill or leak during operation.

- Liquid waste containers of the EDS Waste Transfer Subsystem will be placed in portable secondary containment.

- Any spills or releases of hazardous materials will be cleaned up in accordance with the Contingency Plan described in **Section G** of this permit modification application.

By these measures, contamination of clean water, process water, and potable water systems in use at RSA will be prevented.

F-4d Equipment and Power Failure [40 CFR 270.14(b)(8)(iv); AAC 335-14-8-.02(5)(b)8(iv)]

Equipment Failure Control

The EDS units are designed to be fail safe. If there is an unlikely equipment failure, an EDS unit will contain the waste material within the Containment Vessel. Each EDS unit will be operated within an Environmental Enclosure with ventilation to an Air Filtration System (AFS) that includes prefilter, high efficiency particulate air (HEPA), and high efficiency gas absorber (HEGA) filter units with sulfur-impregnated carbon (SIC) or activated carbon filters, depending on the chemical fill to be treated.

Emergency Power

The primary power source for RSA-EDS site operations will be shore power with a diesel-powered generator as backup power supply for critical systems should the primary power fail. Each EDS unit will be equipped with an emergency power generating system that will be located adjacent to the Environmental Enclosure. The system will consist of one emergency diesel generator capable of carrying the entire emergency load of the corresponding EDS unit. The emergency power generating system will provide backup power to all critical and essential loads in case of a power outage (for example, monitoring, lighting, and AFS). In the event shore power is not available, electrical power for the entire RSA-EDS site will be provided by two diesel-powered generators, one primary and one as backup power supply for critical systems should the primary generator fail.

F-4e Personnel Protection Procedures [40 CFR 270.14(b)(8)(v); AAC 335-14-8-.02(5)(b)8(v)]

Use of personnel protective equipment, monitoring systems, and engineering controls, such as the Environmental Enclosure AFS, will reduce worker exposure where chemical vapors may be present in the event of an upset condition.

Various levels of protective clothing will be required at the RSA-EDS site to protect workers from the effects of chemicals in the work environment. The type of protective clothing worn by the workers will be based on the level of protection required by the location, process, and potential of exposure to chemical agent, and type of chemical fill. **Attachment F-2**, Protective Clothing, of this permit modification application provides descriptions of the various protective clothing that may be worn at the RSA-EDS site.

The monitoring systems will consist of MINICAMS®, Depot Area Air Monitoring System (DAAMS), and other instrumentation that is described in **Attachment F-3**.

F-4f Prevent Release to Atmosphere [40 CFR 270.14(b)(8)(vi); AAC 335-14-8-.02(5)(b)8(vi)]

Each EDS unit will be operated within an Environmental Enclosure. Both the emissions from the EDS unit and ambient air within the Environmental Enclosure will be ventilated to an AFS that includes prefilter, HEPA, and HEGA filter units with SIC or activated carbon filters, depending on the chemical fill to be treated, and another HEPA filter along with fan and ductwork. Information on the AFS carbon filter performance is provided in **Attachment D-4**.

Each AFS will have process indicators that allow operators to monitor the status of the system to ensure it is performing within design specifications. Pressure across each filter is evaluated to ensure it is within the established specifications. The AFS will also include continuous monitoring between carbon filter banks (midbed) to ensure any emissions to the atmosphere are minimized. A description of the monitoring process is provided in **Attachment F-3** of this permit modification application.

(This page intentionally left blank.)

F-5 PREVENTION OF ACCIDENTAL IGNITION OR REACTION OF IGNITABLE, REACTIVE, OR INCOMPATIBLE WASTES [40 CFR 270.14(b)(9) and 264.17(a) and (b); AAC 335-14-8-.02(5)(b)9 and 335-14-5-.02(8)(a) and (b)]

F-5a Precautions to Prevent Accidental Ignition or Reaction of Ignitable or Reactive Wastes [40 CFR 264.17(a) and (b) and 270.14(b)(9)]; AAC 335-14-5-.02(8)(a) and (b) and 335-14-8-.02(5)(b)9]

F-5a(1) Storage of Ignitable or Reactive Wastes

Ignitable wastes, such as spent solvents, may be generated during operations or maintenance activities. If generated, ignitable wastes will be stored in less than 90-day hazardous waste storage areas pending shipment to a permitted treatment, storage, and disposal facility (TSDF). In accordance with the requirements of Alabama Department of Environmental Management Administrative Code Regulation 335-14-5-.09(7), these wastes will be stored more than 50 feet from the RSA property line.

Smoking will be prohibited on the RSA-EDS site. “No Smoking” signs will be prominently displayed around the RSA-EDS site, including the less than 90-day hazardous waste storage areas.

Reactive wastes will be treated at the RSA-EDS site. These reactive wastes are the explosives contained in the energetic components of recovered munitions. The energetic chemical munitions and miscellaneous items will be treated in an EDS unit designed to contain the shock, munition fragments, and fill material during the munition opening process. The EDS unit serves as the reaction vessel for the subsequent treatment of chemical fills and deactivation of energetics. After treatment in an EDS, the wastes will no longer be reactive.

F-5a(2) Preventive Operation Practices

Accidental ignition or reaction of chemical agent/industrial chemicals and explosives will be prevented at the RSA-EDS site through administrative and engineering controls. Explosives operators will handle energetic munitions/items and will minimize handling to reduce the potential for dropping. They will be trained in handling energetic chemical munitions and in the use of PPE. Workers will wear appropriate PPE and use proper lifting techniques and mechanisms. The EDS treatment process will be conducted remotely.

As discussed in **Section C-1a(3)** of this permit modification application, the recovered items will have been characterized prior to treatment at the RSA-EDS site, and will not require additional characterization to perform treatment. The Containment Vessel and seal are periodically leak-tested to ensure integrity.

After completing the EDS treatment cycle and prior to opening the Containment Vessel door, a headspace sample will be collected as applicable, depending on the chemical fill treated. After the Containment Vessel door is opened, the solid wastes will be visually inspected and manually removed. Although unlikely to occur, any observed unexploded components will be reprocessed through the EDS or be placed in appropriate Department of Transportation (DOT)-approved or explosive ordnance disposal (EOD) containers and handled by EOD personnel.

The entire RSA-EDS site will be a designated non-smoking area identified by prominently posted signs. Administrative controls will be in place to prohibit open flames, smoking, cutting, welding, hot surfaces, frictional heat, sparks, and radiant heat in the Environmental Enclosures and surrounding work areas when munitions are present. Equipment will be grounded and bonded to prevent transfer of electrostatic charges to the munitions.

F-5a(3) EDS Design for Explosion Containment [40 CFR 264.31 Subpart C; AAC 335-14-5-.03(2)]

A detailed discussion of the EDS Containment Vessel design and features is presented in **Section D-1** of this permit modification application.

EDS Design

The EDS Containment Vessel is designed and fabricated to the American Society of Mechanical Engineers (ASME) Boiler and Pressure Vessel Code requirements for withstanding a pressure of 2,800 pounds per square inch (psi) at 52°C (125°F), although the working pressure will normally be considerably less than 1,000 psi. Materials of construction were selected to be compatible with the chemical agents, reagents, and high-temperature and high-pressure operating conditions specific to this process.

The EDS Phase 2 units are capable of safely withstanding a detonation of up to 4.8 pounds of trinitrotoluene (TNT) equivalent explosives.

Depending on the types and numbers of items being treated, recovered items to be processed will be placed into an expendable metal holder then placed inside the reusable Advanced Fragment Suppression System with expendable steel rods.

The framework serves to connect, hold, and align explosive charges that open the main body of items being treated to expose chemical fill and to protect the Containment Vessel interior from the high velocity fragments resulting during detonation of shaped charges, burster casing, and munitions (or other items).

Additionally, the Containment Vessel is designed to operate without any method of pressure relief because of the potential for venting toxic vapors.

The EDS work area will be surrounded by an Environmental Enclosure. The enclosure will be equipped with at least one AFS. This system includes prefilters, HEPA and HEGA filters with SIC or activated carbon filters (depending on the chemical fill to be treated) to maintain negative pressure within the structure and filter the airborne releases, thereby minimizing the potential for airborne contaminants, for example, toxic mists, fumes, dusts, or gases, to be released to the environment. The enclosure will also shelter the Containment Vessel and workspace from the elements.

F-5a(4) EDS Waste Treatment and Vessel Integrity Documentation

The EDS Phase 1 and Phase 2 units were developed and are in use for chemical fill treatment operations. Tests were undertaken to demonstrate that the EDS units can safely and effectively treat chemical munitions containing explosives and other munitions [for example, German Traktor Rockets (GTRs)] containing propellant-filled motors. These tests successfully demonstrated that EDS Containment Vessel integrity was maintained during EDS operations.

During developmental testing of the EDS Phase 1 Unit 1 at Porton Down, United Kingdom; two expedited disposal operations to Rocky Mountain Arsenal, Colorado; and operational testing at Aberdeen Proving Ground-Edgewood Area, Maryland; a total of 52 test items were successfully processed. These test items included 11 simulated items, 10 lab-prepared cylinders, and 31 recovered munitions. These destruction operations were performed safely, efficiently, and in an environmentally sound manner without any injuries attributed to either EDS Phase 1 Unit 1 operations or hardware. Across all EDS Phase 1 Unit 1 testing operations, the test objectives outlined for system use were satisfied. These tests are documented in the U.S. Army Chemical Materials Agency, Program Manager for the Elimination of

Chemical Weapons, Product Manager for Non-Stockpile Chemical Materiel, February 2002 *Final Explosive Destruction System Phase 1 Unit 1 Operational Test Report*.

Successful follow-on testing of the EDS Phase 1 Unit 2 is documented in the November 2003 *Final Explosive Destruction System Phase 1 Unit 2 Follow-On Test and Evaluation Report*. This report documents the successful treatment of 19 recovered chemical munitions at Aberdeen Proving Ground-Edgewood Area and 15 recovered chemical munitions at Spring Valley, District of Columbia. Destruction of the 34 recovered chemical munitions was completed safely, efficiently, and in an environmentally sound manner.

Developmental and operational testing of the EDS Phase 2 Unit 1 (an EDS unit larger than the EDS Phase 1) is documented in the March 2004 *Explosive Destruction System Phase 2 Unit 1 Test Report for Porton Down*. During the tests, which were conducted at Porton Down, United Kingdom, between 14 April and 11 July 2003, destruction of 34 toxic munitions and items in 16 trials was completed safely, efficiently, and in an environmentally sound manner.

Follow-on test evaluation results documented in Sandia National Laboratories' *Analysis and Testing to Support Processing German Traktor Rockets (GTRs) in EDS*, May 2009, indicated that the Phase 2 unit can safely process GTRs containing propellant-filled motors.

As indicated by the developmental and demonstration tests conducted to date and described above, as well as recent EDS operations deployed under Comprehensive Environmental Response, Compensation, and Liability Act (CERCLA) and Resource Conservation and Recovery Act (RCRA) response actions, the EDS is a proven treatment/destruction technology. Most notable, the EDS completed RCRA permitted treatment operations at the Pine Bluff Arsenal in Pine Bluff, Arkansas, in April 2010 where two EDS Phase 2 units and one Phase 1 unit were used to safely destroy/treat more than 1,200 chemical agent munitions comprising various sized mortars, projectiles, bombs, and GTRs without incident.

F-5a(5) Fire Protection

If a fire occurs as a result of an explosion, fire extinguishers will be used to prevent the spread of fire. Additional support will be provided by the RSA Fire Department if necessary. **Section G-4** of this permit modification application provides information on fire detection, alarm, and procedures that will be used at the RSA-EDS site.

F-5b General Precautions for Handling Ignitable or Reactive Wastes and Mixing of Incompatible Wastes [40 CFR 264.17; AAC 335-14-5-.02(8)]

A description on how ignitable wastes will be managed and general precautions for handling reactive waste are provided in **Sections F-5a(1)** and **F-5a(2)**.

F-5c Management of Ignitable or Reactive Wastes in Containers [40 CFR 270.15(c) and 264.176; AAC 335-14-8-.02(6)(c) and 335-14-5-.09(7)]

Recovered items containing reactive materials (energetics) will be transferred from an RSA storage igloo to the RSA-EDS site for treatment in an EDS unit. Ignitable wastes may be stored in a less than 90-day hazardous waste storage area at the RSA-EDS site. Handling of these reactive and ignitable wastes will be more than 50 feet from the RSA-EDS site fence line, and also will be more than 50 feet from the RSA boundary.

F-5d Management of Incompatible Wastes in Containers [40 CFR 270.15(d) and 264.177; AAC 335-14-8-.02(6)(d) and 335-14-5-.09(8)]

No incompatible hazardous wastes will be managed at the RSA-EDS site. The EDS has been designed to be compatible with the wastes to be treated and the treatment reagents used in the treatment process.

NOTE: The RSA-EDS site will not contain any tank systems, waste piles, surface impoundments, landfills, containment buildings, or land treatment units. The requirements to discuss the management of ignitable, reactive, or incompatible wastes in these units are, therefore, not applicable. Therefore, there are no entries for **Sections F-5d** through **F-5o** for the requirements listed in 335-14-5-.10, 335-14-5-.11, 335-14-5-.12, 335-14-5-.13, 335-14-5-.14, and 335-14-5-.30.

1 (This page intentionally left blank.)

ATTACHMENT F-1

EXAMPLE INSPECTION LOG SHEETS

(This page intentionally left blank.)

RSA-EDS Daily (When in Use) Operational Inspection Checklist
EXAMPLE

EDS Operation Day: 1 2 **Environmental Enclosure 1 or 2**

Inspected By: _____ **Date: _____**

Signature: _____ **Time: _____**

#	Activity	Yes, No, or Not Applicable (NA)?	Corrective Action Required? If Yes, provide detail below.
EDS Containment Vessel (Interior and Exterior)			
1	Are there any spills, leaks, or liquids in the area?		
2	Does the exterior—tubing and valves—show any signs of corrosion, leakage, or other physical damage, such as tears, stresses, gouges, rips, cracks, loose screws, etc.?		
3	Does the interior show any signs of physical damage that would impair treatment capability?		
EDS Waste Transfer Subsystem			
4	Are the Waste Transfer Subsystem hoses/connections from the Containment Vessel door to liquid waste containers in good condition? [Subpart CC]		
5	Are containers in good condition, i.e., no signs of deterioration, rust, corrosion, or leaking? [Subpart CC]		
6	Is there a minimum two feet aisle space between containers and walls of the Environmental Enclosure?		
7	Does the secondary containment for waste containers show signs of cracks, flaking, chips, gouges, or obvious wear or deterioration?		
8	Does the secondary containment for waste containers have signs of drips, spills, or leaks or any accumulated liquids?		
EDS Trailer Secondary Containment Pan			
9	Does secondary containment pan show liquids, leakage, or signs of corrosion, or other physical damage, such as cracks, gaps, or holes?		
Lift Assist– IF THE LIFT ASSIST IS NOT BEING USED, DO NOT COMPLETE THIS SECTION.			
10	Does the jib crane show signs of physical damage such as cracking, bending, deformity, or corrosion?		
11	Does the jib crane have freedom of rotation? Is hook operable?		
12	Are all jib crane mechanisms (sheaves, brakes, and locking mechanism) operable and in good condition?		

#	Activity	Yes, No, or Not Applicable (NA)?	Corrective Action Required? If Yes, provide detail below.
Environmental Enclosure			
13	Are AFS units functioning and operable? Are magnehelic readings recorded on Daily Checklist?		

Comments/Discrepancies/Remedial Work Required: _____

_____

Date Corrective Action Completed: _____ Verified by: _____

RSA-EDS Site
Daily Inspection (When in Use)
EXAMPLE

Inspected By: _____ **Date:** _____

Signature: _____ **Time:** _____

#	Activity	Yes, No, or Not Applicable (NA)?	Corrective Action Required? If Yes, provide detail below.
Communication Equipment			
1	Are land line telephones, cellular telephones, hand-held radios or other communication equipment present and operable?		
2	Is closed-circuit television operable and visual clarity/tilt, pan and zoom functions acceptable?		
3	Has the integrity of EDS panel audible/visual alarm been checked?		
Personnel Decontamination Station			
4	Is appropriate and adequate decontamination solution present? Is PDS easily accessible? Is PDS equipment present and operable?		
Spill Kits and Emergency Response Equipment			
5	Do Spill Kits contain sufficient inventory? Are items in good condition and within expiration dates (as applicable)?		
6	Is emergency response equipment such as shovels, brooms, overpacks, present onsite, in sufficient quantities and in good condition to support response actions?		
Monitoring (MINICAMS® and DAAMS)			
7	Are monitors in good physical condition? Operating properly? Are diagnostic indicators operating?		
8	Are sample lines and connections in good condition? Is heat trace functional? Proper ventilation for exhaust?		
9	Was chemical agent challenge test and calibration conducted?		

Comments/Discrepancies/Remedial Work Required: _____

_____

_____

Date Corrective Action Completed:

_____ Verified by: _____

RSA-EDS Site
Monthly Inspection
EXAMPLE

Inspected By: _____ **Date:** _____

Signature: _____ **Time:** _____

#	Activity	Yes, No, or Not Applicable (NA)?	Corrective Action Required? If Yes, provide detail below.
Fire Extinguisher			
1	Are fire extinguishers present and operable? Is there adequate gauge pressure? Is the equipment within the service date?		
Emergency Generators			
2	Start generators; check voltage current and frequency output regularity and filter differential pressure. Are units operable?		
Security			
3	Is fencing of good integrity; any intrusion, or obstruction by vegetation or other damage?		
4	Are warning signs present and legible?		

Comments/Discrepancies/Remedial Work Required: _____

_____

_____

Date Corrective Action Completed:

_____Verified by: _____

ATTACHMENT F-2
PROTECTIVE CLOTHING

- EDS Operations

(This page intentionally left blank.)

PPE Levels for Processing Items[a]

Task	PPE Requirement
Emergency Operations or Response (work space is at or above action levels)	OSHA Level B PPE
Site Setup	OSHA Level D PPE
Monitoring	OSHA Level D PPE
Transferring Reagent Between Reagent Drums and EDS Tanks	OSHA Level C PPE
Decontamination Personnel	OSHA Level C PPE
Site Operations Support Personnel, Data Collection, Project Observers, Visitors, Nonchemical Workers	OSHA Level D PPE
Routine and Occasional Maintenance	OSHA Level D PPE
Handling Cleared[b] Liquid Waste Containers	OSHA Level D PPE
Handling Munitions/Chemical-Filled Cylinders Upon Initial Receipt and Assessment	OSHA Level C PPE
Collecting Liquid or Vapor Samples (if work space is below action levels)	OSHA Level C PPE
Collecting Liquid or Vapor Samples (if work space is at or above action levels)	OSHA Level B PPE
Opening EDS Containment Vessel Door	OSHA Level C PPE
Sampling Containment Vessel Solid Waste and Removal of Munition/AFSS or FSS Metal Parts	OSHA Level C PPE
Handling Uncleared[c] Waste Materials and Containers	OSHA Level C PPE
DAAMS Technicians Collecting Tubes (when work space is below action levels)[d]	OSHA Level D PPE[e]
DAAMS Technicians Collecting Tubes (when operations are in progress)[d]	OSHA Level C PPE
DAAMS Technicians Collecting Tubes (when work space is at or above action levels or operations are in progress)[d]	OSHA Level B PPE

Notes:

[a] Protection levels may be downgraded or modified on approval.

[b] "Cleared" means that a liquid waste sample has been collected, analyzed for chemical agent, and found to meet treatment levels.

[c] "Uncleared" means that a sample has not yet been collected, or results have not been reported yet, or the results indicate that the treatment level is not met.

[d] Applicable for chemical agent operations only. In the event of a worker population limit (WPL) excursion, the site-specific WPL Excursion Plan will be put into effect.

[e] PPE level/respiratory protection is dependent on monitoring results.

AFSS = Advanced Fragment Suppression System
DAAMS = Depot Area Air Monitoring System
EDS = Explosive Destruction System
FSS = Fragment Suppression System
OSHA = Occupational Safety and Health Administration
PPE = personal protective equipment

(This page intentionally left blank.)

ATTACHMENT F-3

RSA-EDS SITE-SPECIFIC MONITORING PLAN AND MONITORING DEVICES

(This page intentionally left blank.)

Recovered Chemical Materiel Directorate (RCMD)

Site-Specific Monitoring Plan for the Explosive Destruction System at Redstone Arsenal

(This page intentionally left blank.)

Recovered Chemical Materiel Directorate (RCMD)

Site-Specific Monitoring Plan for the Explosive Destruction System at Redstone Arsenal

February 2016

(This page intentionally left blank.)

TABLE OF CONTENTS

Section/Paragraph	Title	Page
LIST OF TABLES		Attachment F-3-iii
1	INTRODUCTION	Attachment F-3-1
1.1	Purpose and Scope	Attachment F-3-1
1.2	Chemicals of Concern	Attachment F-3-2
1.3	Monitoring Objectives	Attachment F-3-3
1.3.1	Monitoring Levels	Attachment F-3-3
1.3.2	AELs	Attachment F-3-4
1.3.3	OELs	Attachment F-3-4
2	ORGANIZATION AND MANAGEMENT RESPONSIBILITIES	Attachment F-3-4
2.1	U.S. Army Recovered Chemical Materiel Directorate (RCMD)	Attachment F-3-4
2.2	U.S. Army Chemical Materials Activity (CMA) Risk Management Directorate	Attachment F-3-9
2.3	RCMD Site Manager	Attachment F-3-9
2.4	ECBC	Attachment F-3-10
3	MONITORING STRATEGIES	Attachment F-3-10
3.1	NRT Monitoring	Attachment F-3-11
3.2	Historical Monitoring	Attachment F-3-11
3.3	Confirmation Monitoring	Attachment F-3-12
3.4	Monitoring of Potentially Exposed Workers	Attachment F-3-12
4	MONITORING EQUIPMENT	Attachment F-3-13
4.1	Monitoring Equipment Description	Attachment F-3-13
4.1.1	MINICAMS	Attachment F-3-13
4.1.2	DAAMS	Attachment F-3-14
4.1.3	Colorimetric Tubes	Attachment F-3-14
4.1.4	CG Dosimeter Badges	Attachment F-3-14
4.2	Preventive Maintenance	Attachment F-3-14
5	QC REQUIREMENTS	Attachment F-3-15
5.1	Certification Requirements	Attachment F-3-15
5.1.1	P&A Method Certification	Attachment F-3-15
5.1.2	Baseline Method Certification and Validation	Attachment F-3-15
5.2	Calibration Requirements	Attachment F-3-16
5.3	Challenge Requirements	Attachment F-3-16
5.4	Monitoring QC Data Statistical Validation	Attachment F-3-16
5.5	Equipment Acceptance Requirements	Attachment F-3-17
5.5.1	Acceptance Testing Requirements	Attachment F-3-17
6	LIMITING CONDITIONS OF OPERATION (LCOs)	Attachment F-3-17
7	NRT NOTIFICATIONS	Attachment F-3-17

TABLE OF CONTENTS (Continued)

Section/Paragraph	Title	Page
8	DOCUMENTATION	Attachment F-3-17
8.1	General Monitoring Documentation	Attachment F-3-17
8.2	Alarm Confirmation Reports	Attachment F-3-18
8.3	Equipment Documentation	Attachment F-3-19
8.4	Reference Standards	Attachment F-3-19
9	TRAINING REQUIREMENTS	Attachment F-3-20

APPENDIX ATTACHMENT F-3-1	ACRONYMS/ABBREVIATIONS
APPENDIX ATTACHMENT F-3-2	MONITORING STRATEGY DURING MUSTARD OPERATIONS
APPENDIX ATTACHMENT F-3-3	MONITORING STRATEGY DURING L OPERATIONS
APPENDIX ATTACHMENT F-3-4	MONITORING STRATEGY DURING CNB AND CNS OPERATIONS
APPENDIX ATTACHMENT F-3-5	MONITORING STRATEGY DURING CG OPERATIONS
APPENDIX ATTACHMENT F-3-6	REFERENCES

LIST OF TABLES

Table	Title	Page
Attachment F-3-1	AELs for HD/HS/HT	Attachment F-3-5
Attachment F-3-2	AELs for HN-3	Attachment F-3-6
Attachment F-3-3	AELs for L	Attachment F-3-7
Attachment F-3-4	OELs for Industrial Chemicals	Attachment F-3-8
Attachment F-3-5	NRT Alarm Notification Matrix	Attachment F-3-18

(This page intentionally left blank.)

1. INTRODUCTION

This document presents a site-specific monitoring plan (SSMP) for the Redstone Arsenal Explosive Destruction System (RSA-EDS) site located at Redstone Arsenal (RSA), Alabama. This plan details monitoring requirements for chemical agents and industrial chemicals and addresses the monitoring requirements specified in the following documents:

- U.S. Army Chemical Materials Agency, *Programmatic Monitoring Concept Plan* (MCP)
- U.S. Army Chemical Materials Agency, *Programmatic Laboratory and Monitoring Quality Assurance Plan* (LMQAP)
- Edgewood Chemical Biological Center (ECBC), Environmental Monitoring Laboratory, *Laboratory and Monitoring Quality Control Plan for Chemical Materials Agency (CMA) and for Chemical Agent Standard Analytical Reference Material (CASARM)* (LMQCP).

Chemical operations will typically be conducted in Level C personal protective equipment (PPE). However, all monitoring will be performed at levels required for unmasked workers, designated as “no respiratory protection” in the airborne exposure limit (AEL) tables.

A typical operational day will be from 10 to 12 hours long. During operations, continuous near real-time (NRT) monitoring and historical monitoring will be performed. MINICAMS® units will not be challenged during non-operational hours (that is, nights and weekends). At no time will chemical fill be stored onsite in the RSA-EDS Environmental Enclosures outside of engineering controls during non-operation hours.

1.1 Purpose and Scope

The purpose of this monitoring plan is to define the strategy used to monitor airborne exposure concentrations of agent and industrial chemicals during Explosive Destruction System (EDS) operations.

This monitoring plan outlines monitoring objectives, procedures, and responsibilities for the execution of a monitoring program at the RSA-EDS site. Monitoring strategies used to support RSA-EDS site operations are based on the following:

- The chemical fill of each recovered munition or other item has been identified.
- The EDS unit will be located inside an Environmental Enclosure equipped with an Air Filtration System (AFS) unit.
- Monitoring for the specific chemicals of concern will be performed continuously during operations in the Environmental Enclosure.
- Chemical agent will not be stored overnight in the Environmental Enclosure.

1.2 Chemicals of Concern

The types of chemical fills that may be treated during RSA-EDS site operations include the following:

- Phosgene (CG)
- Carbon tetrachloride + chloroacetophenone + benzene (CNB)
- Chloroacetophenone + chloropicrin + chloroform (CNS)
- Arsenicals (Diphenylchloroarsine [DA] + phenyldichloroarsine [PD])
- Mustard Arsenicals (HD + DA/PD)
- Titanium tetrachloride (FM smoke)[1]
- Sulfur trioxide + chlorosulfonic acid (FS smoke)[1]
- Nitrogen mustard (HN-3)

[1] Worker protection monitoring is not required during treatment of smoke-filled items. Releases will be determined by visual detection.

- Sulfur mustard (HD/HS/HT)

- Lewisite (L)

Campaign-specific monitoring strategies for the chemical fills of concern are attached as **Appendices F-3-2** thru **F-3-5**. As other chemical fills are identified for this RSA-EDS site, they will be addressed in specific chemical-fill monitoring plan addendum(s) to this plan.

1.3 Monitoring Objectives

Chemical monitoring during EDS operations at RSA is performed to ensure that operations are being safely conducted and to detect any conditions that may cause a release of chemical materiel. Monitoring of the site during treatment activities will accomplish the following:

- Provide worker protection.

- Protect the environment from a potential chemical release.

- Provide early warning to decision-makers for implementation of corrective action(s).

1.3.1 Monitoring Levels. Monitoring results will be used to ensure that operations are being conducted in a safe manner and to detect any conditions that may cause workers to be exposed to chemical agent or industrial chemical vapors during upset conditions.

When conducting chemical agent operations, monitoring at the short-term exposure limit (STEL) will be performed in areas where worker protection monitoring is conducted. Because the NRT monitors measure and report the concentration at the vapor screening level (VSL), the STEL is manually calculated using this concentration reported by the NRT monitor to determine if the STEL has been exceeded. However, all MINICAMS results will be communicated to the Command Post in VSL units.

The VSL is intended for applications and/or locations that require monitoring for an environmental release, engineering controls (for example, filters), process upset condition, or vapor decontamination classification monitoring. The VSL is a concentration-only value and does not consider the analytical method's sampling duration other than to determine the volume of air sampled to calculate the analyte concentration.

Monitoring for all industrial chemicals will be at the applicable occupational exposure limit (OEL).

1.3.2 AELs. The AELs for chemical agents are provided in **Tables Attachment F-3-1** through **F-3-3**.

1.3.3 OELs. The OELs for industrial agents are provided in **Table Attachment F-3-4**.

2. ORGANIZATION AND MANAGEMENT RESPONSIBILITIES

RSA-EDS site operations will require collaborative efforts between several government agencies. These agencies and their respective duties are discussed in the following paragraphs.

2.1 U.S. Army Recovered Chemical Materiel Directorate (RCMD)

RCMD is responsible for the following:

- Developing and coordinating all plans and procedures required for RSA-EDS site operations
- Ensuring that appropriate review and approval of EDS procedures are obtained from the Department of the Army and outside agencies
- Implementing a quality assurance (QA) program
- Ensuring Occupational Safety and Health Administration (OSHA) and Department of the Army health and safety requirements are met
- Ensuring that all recovered munitions and other items transportation, storage, treatment, waste management, and closure operations at the RSA-EDS site are conducted in compliance with federal, state, and local laws, and Army and other applicable regulations
- Overseeing chemical agent treatment and certifying treatment is complete.

Table Attachment F-3-1. AELs for HD/HS/HT

HD/HS/HT	Averaging Time					
	WPL (12 hours)	WPL (8 hours)	WPL (4 hours)	WPL (2 hours)	STEL[a] (15 minutes)	Variable
No Respiratory Protection	2.7×10^{-4} mg/m^3	4×10^{-4} mg/m^3	8×10^{-4} mg/m^3	1.6×10^{-3} mg/m^3	3×10^{-3} mg/m^3	
Air-Purifying Respirator	Use only in accordance with Army/NIOSH approval and restrictions on use.					
M40-Series Mask[b]	1.0×10^{-3}	1.5×10^{-3}	3.0×10^{-3}	6.0×10^{-3}	3.0×10^{-2}	
Supplied-Air Respirator w/o Escape Bottle	0.27 mg/m^3	0.4 mg/m^3	0.4 mg/m^3	0.4 mg/m^3	0.7 mg/m^3	
Self-Contained Breathing Apparatus or Supplied-Air Respirator with Escape Bottle	2.7 mg/m^3	4 mg/m^3	8 mg/m^3	16 mg/m^3	30 mg/m^3	
Vapor Screening Limit						3×10^{-3} mg/m^3

Notes:

[a] Exposures at the STEL shall occur not more than one time per day. The Centers for Disease Control and Prevention (CDC) may publish updated numbers.
[b] Use of the M40-series mask in sulfur mustard operations (in addition to escape purposes) is authorized by DA Pam 385-61.

Airborne exposure limits (AELs) are taken from the U.S. Army Chemical Materials Agency Programmatic Monitoring Concept Plan (MCP) and 69 FR 24164-24168 (3 May 2004). All AELs are concentration and time values, not concentration only values. Administrative controls may be used to limit potential exposure to workers. However, because administrative controls cannot be used to limit the duration of potential public exposure, only the WPL protective action level is significantly affected by administrative controls, which limit the duration of potential exposure.

The maximum use concentration is the product of the AEL and the assigned protection factor for the respirator. The assigned protection factors used in this table are taken from 68 FR 34036-34119, 6 June 2003. For sulfur mustards, air-purifying respirators are for escape purposes only.

HD = distilled sulfur mustard
HS = sulfur mustard
HT = mustard-T mixture
mg/m^3 = milligram per cubic meter
NIOSH = National Institute for Occupational Safety and Health
STEL = short-term exposure limit
WPL = worker population limit

Table Attachment F-3-2. AELs for HN-3

HN-3	Averaging Time					
	WPL (12 hours)	WPL (8 hours)	WPL (4 hours)	WPL (2 hours)	STEL (15 minutes)	Variable
No Respiratory Protection	3×10^{-3} mg/m^3	3×10^{-3} mg/m^3	3×10^{-3} mg/m^3	3×10^{-3} mg/m^3	3×10^{-3} mg/m^3	
Air-Purifying Respirator	For nitrogen mustards, air-purifying respirators are for escape purposes only.					
Supplied-Air Respirator w/o Escape Bottle	0.4 mg/m^3	0.4 mg/m^3	0.4 mg/m^3	0.4 mg/m^3	0.7 mg/m^3	
Self-Contained Breathing Apparatus or Supplied-Air Respirator with Escape Bottle	30 mg/m^3	30 mg/m^3	30 mg/m^3	30 mg/m^3	30 mg/m^3	
Vapor Screening Limit						3×10^{-3} mg/m^3

Notes:

Airborne exposure limits (AELs) are taken from the U.S. Army Chemical Materials Agency *Programmatic Monitoring Concept Plan* (June 2004).

All AELs are concentration only values, regardless of duration. Personal protective equipment (PPE) may be used to limit potential exposure to workers.

HN-3 = nitrogen mustard
mg/m^3 = milligram per cubic meter
STEL = short-term exposure limit
WPL = worker population limit

Table Attachment F-3-3. AELs for L

L	Averaging Time					
	WPL (12 hours)	WPL (8 hours)	WPL (4 hours)	WPL (2 hours)	STEL (15 minutes)	Variable
No Respiratory Protection	3×10^{-3} mg/m^3	3×10^{-3} mg/m^3	3×10^{-3} mg/m^3	3×10^{-3} mg/m^3	3×10^{-3} mg/m^3	
Air-Purifying Respirator	For lewisite, air-purifying respirators are used for escape purposes only.					
Supplied-Air Respirator w/o Escape Bottle	0.4 mg/m^3	0.4 mg/m^3	0.4 mg/m^3	0.4 mg/m^3	0.7 mg/m^3	
Self-Contained Breathing Apparatus or Supplied-Air Respirator with Escape Bottle	30 mg/m^3	30 mg/m^3	30 mg/m^3	30 mg/m^3	30 mg/m^3	
Vapor Screening Limit						3×10^{-3} mg/m^3

Notes:

Airborne exposure limits (AELs) are taken from Department of the Army Pamphlet (DA Pam) 385-61 (December 2012).

All AELs are concentration only values, regardless of duration. Personal protective equipment (PPE) may be used to limit potential exposure to workers.

Lewisite exposure at the STEL shall occur not more than one time per day (See DA Pam 385-61).

L = lewisite
mg/m^3 = milligram per cubic meter
STEL = short-term exposure limit
WPL = worker population limit

Table Attachment F-3-4. OELs for Industrial Chemicals

Analyte	Source	Exposure Limit (mg/m^3)
CG[a,b]	ACGIH TLV and OSHA PEL	0.4 (8-hour TWA) 12.8 (15-min STEL)[c]
PS[a]	ACGIH TLV	0.67 (8-hour TWA) 21.4 (15-min STEL)[c]
Carbon Tetrachloride[a,b]	ACGIH TLV	31 (8-hour TWA) 63 (15-min STEL)[c]
	OSHA PEL	25 (Ceiling) 200 (5-min peak in any 3 hours)
CN[a,b]	OSHA PEL	0.3 (8-hour TWA)[c] 9.6 (15-min STEL)[c]
Chloroform[a,d]	NIOSH REL	9.78 (60-min STEL)[c] 39.1 (15-min STEL)[c]

Notes:

[a] American Conference of Governmental Industrial Hygienists (ACGIH), TLVs for Chemical Substances and Physical Agents and BEIs, 2011
[b] Occupational Safety and Health Administration (OSHA)
[c] Adjusted value from the 8-hour TWA.
[d] U.S. National Institute for Occupational Safety and Health (NIOSH) Recommended Exposure Limits

CG = phosgene
CN = chloroacetophenone
mg/m^3 = milligram per cubic meter
PEL = permissible exposure limit
PS = chloropicrin
REL = recommended exposure limit
STEL = short-term exposure limit
TLV = threshold limit value
TWA = time-weighted average

2.2 U.S. Army Chemical Materials Activity (CMA) Risk Management Directorate

The CMA Risk Management Directorate is responsible for:

- Notifying outside agencies such as the Department of Health and Human Services (DHHS) of monitoring results
- Defining laboratory and monitoring QA requirements for monitoring activities
- Advising the RCMD on laboratory-related quality assurance/quality control (QA/QC) practices
- Recommending QA/QC practices for RCMD to use in supporting the EDS monitoring activities
- Reviewing and evaluating this SSMP and quality control (QC) plans
- Monitoring the effective implementation of this SSMP at the RSA-EDS site
- Reviewing QC data and recommending remediation, as required.

2.3 RCMD Site Manager

The RCMD Site Manager is responsible for the following:

- Developing and coordinating all activities to be conducted during RSA-EDS site operations
- Providing technical oversight and assistance for EDS operations
- Ensuring that all operations are conducted in compliance with Federal, State, and local laws, and Army and other applicable regulations.

2.4 ECBC

Monitoring will be conducted by ECBC, who will:

- Collect and retain all monitoring data and monitoring QC data generated during the project
- Provide guidance for monitoring operations conducted onsite
- Provide trained and certified personnel to set up, calibrate, and challenge monitoring equipment and collect monitoring and waste screening samples
- Provide calibration and challenge research development, test, and evaluation (RDT&E) standards for chemicals of concern
- Perform monitoring procedures outlined in this Plan
- Provide a Mobile Analytical Platform (MAP) configured with instrumentation capable of analyzing Depot Area Air Monitoring System (DAAMS) tubes and performing chemical agent screening of liquid samples collected from the EDS Containment Vessel and waste containers.

3. MONITORING STRATEGIES

Placement of each monitoring location is based on potential chemical migration points and verified via the use of a smoke test. When monitoring supports personnel protection, monitoring locations should be located in close proximity of personnel and preferably at the breathing zone height. Heat-traced sample lines (HTSLs) will be no more than 150 feet in length.

The following paragraphs describe the types of monitoring that will be employed during RSA-EDS operations. Specific monitoring strategies for analytes are provided in **Appendices F-3-2** through **F-3-5**.

3.1 NRT Monitoring

NRT monitoring is online monitoring conducted in areas where contamination is likely or possible in order to determine airborne chemical concentration of chemical warfare agents (CWAs) and toxic industrial chemicals (TICs) in the shortest amount of time at the monitoring level commensurate with engineering controls and worker protection. An NRT monitoring system has the capability to automatically collect, analyze, and report/display the results within 15 minutes when chemicals are present at or above the AEL concentration.

3.2 Historical Monitoring

Historical monitoring during operations is performed to measure very low concentrations of airborne analytes at the worker population limit (WPL) and is designed to trigger activities to investigate the source of contamination that may be found below the alarm level of the NRT system. Historical monitoring is used for chemical agent monitoring only. Sampling is accomplished by collecting an air sample over an extended period of time (usually the duration of a workday); subsequent analysis is conducted offline at the MAP. All historical DAAMS samples must be analyzed within 72 hours of sampling termination.

During operations, historical DAAMS stations will be located at the inlet to the AFS and at the exhaust of the AFS. Samples will be collected and analyzed at any time work is performed in the Environmental Enclosure until the site has completed closure.

Because the chemical agents will be processed in campaigns, historical monitoring at the filter exhaust will normally be conducted for the chemical agent being processed in the current campaign. In the event there is a confirmed NRT alarm in the filter midbed from an earlier campaign, historical monitoring for the agent that resulted in the alarm will continue at the filter exhaust location throughout all subsequent campaigns until carbon filter changeout. This process could result in monitoring for more than one agent in this location.

Historical monitoring is not required for industrial chemicals; however, during CNB and CNS operations, a single DAAMS tube station will be located near the inlet of the AFS for the purpose of monitoring chloroacetophenone (CN).

3.3 Confirmation Monitoring

Confirmation monitoring is performed to validate or invalidate an alarm or positive measurement received from the principal monitoring method, (either an NRT method or historical method) and is accomplished by collecting a vapor sample in the immediate vicinity of the NRT monitor or historical sampling location. Subsequent analysis is conducted offline at the MAP.

Confirmation monitoring is used for informational and qualitative data reporting purposes in the event of a chemical materiel release. The confirmation sample shall be analyzed by a method different from the principal method (NRT or historical) to increase the likelihood of detecting interferences and only upon a principal method (NRT or historical) positive response. Confirmation monitoring samples shall be given priority over all routine samples and shall be analyzed within 72 hours of sampling termination.

During chemical agent operations, confirmation DAAMS tubes are continually aspirated throughout the workday. In the event of an NRT alarm, the DAAMS tubes co-located with the alarming MINICAMS are collected and analyzed. DAAMS tubes will be co-located at all NRT monitoring locations.

During industrial chemical operations, confirmation samples (using dosimeters for CG or colorimetric tubes for all other industrial chemicals) will be collected at the location of the NRT alarm. All NRT alarms will have the means to be confirmed by this type of alternate method except for those occurring in the AFS.

3.4 Monitoring of Potentially Exposed Workers

During agent operations, monitoring of potentially exposed workers will be conducted in accordance with the DA Memorandum: *Interim Guidance on Occupational Health Practices for the Evaluation and Control of Occupational Exposures to Nerve Agents GA, GB, GD, GF, and VX and Mustard Agents H, HD, and HT*, 6 November 2012.

4. MONITORING EQUIPMENT

Chemicals of concern will be monitored using the following equipment:

- MINICAMS
- DAAMS tubes
- Colorimetric tubes
- Dosimeter badges.

4.1 Monitoring Equipment Description

The following paragraphs describe the monitoring equipment in more detail.

4.1.1 MINICAMS. All NRT chemical agent monitoring will be performed using MINICAMS. The MINICAMS is an automated gas chromatograph (GC) that operates by alternating between sampling and analysis cycles.

During the sample cycle, a vacuum system pulls an air sample into the MINICAMS via an HTSL. For NRT monitoring, the sampling and analysis cycle of the MINICAMS must be no more than 15 minutes.

The sample enters the MINICAMS and concentrates on a solid sorbent tube[2] (i.e., preconcentrator tube). The sorbent tube is maintained at a temperature that will prevent condensation from forming on the sorbent tube. During sample analysis, the solid sorbent tube is heated to thermally desorb the analytes, while nitrogen flows into the sorbent tube to sweep the analytes into the capillary column for analytical separation. The analytes are separated and carried to the detector for sample analysis.

All MINICAMS units will be located in a monitoring shed and will be equipped with a Teflon® HTSL that will not exceed 150 feet in length. The distal end of each sample line will be positioned at an NRT sampling location.

[2] L MINICAMS analysis requires L to be derivatized. Derivatization is performed by using an L derivatization module, which reacts L with ethanedithiol.

4.1.2 DAAMS. DAAMS tubes are used to provide historical agent monitoring at the WPL and to confirm agent MINICAMS alarms and historical responses. The DAAMS stations are comprised of solid sorbent DAAMS tubes, sample manifolds, sequencers, pumps, and flow control devices. Monitoring with DAAMS employs air aspiration through the DAAMS tube for a predetermined period of time at a controlled airflow rate. Contaminants in the air are adsorbed on the solid sorbent. Aspirated DAAMS samples are then analyzed in the MAP to detect chemical materiel. Laboratory analysis uses thermal desorption of the analytes from the sorbent tubes into a gas chromatograph/mass spectrometer (GC/MS) or gas chromatograph/flame photometric detector (GC/FPD). If GC/MS is used for analysis, no additional confirmation is required.

4.1.3 Colorimetric Tubes. Colorimetric tubes are used to measure concentrations of specific contaminants. Tubes are scaled and operate on a defined sample volume drawn through the tube by performing a specified number of pump strokes (either manually or automatically by use of a sample pump). Tubes are specific for the chemical of concern. When used for confirmation of a MINICAMS work area alarm, a colorimetric tube will be used to collect a sample in the location of the alarm and the tube will be assessed to determine if the MINICAMS alarm was valid or invalid.

4.1.4 CG Dosimeter Badges. During CG operations, CG dosimeter badges will be used for confirmation of NRT CG work area alarms. Detection for CG is based upon a specific chemical reaction that leads to the formation of colored reaction products when CG is present above the threshold concentration. Each badge consists of two windows, an indicator window and a control window. The indicator window provides immediate color indication when CG is present in the detection range. The second window is the control window, which remains covered by a filter barrier. The control window filter barrier is manually removed upon a color indication in the indicator window, and the color change in the control window is matched to the dose estimator color wheel to estimate the concentration of CG present.

4.2 Preventive Maintenance

Preventive maintenance of all monitoring equipment will be performed in accordance with the approved quality plans and procedures.

5. QC REQUIREMENTS

5.1 Certification Requirements

The MAP shall perform a certification and validation process for operators, instruments, and methods to confirm that analytical processes are suitable for use.

Method certification will require completion of a successful precision and accuracy (P&A) study and initial baseline study. Method certification will be required before the method can be used in support operations. Method validation will be demonstrated through the continuous baseline study.

5.1.1 P&A Method Certification. P&A studies will be performed at the RSA-EDS site prior to the pre-operational survey for data evaluation by the RCMD Risk Management. All P&A studies must be completed in accordance with the U.S. Army Chemical Materials Agency LMQAP (most current version).

5.1.2 Baseline Method Certification and Validation. All methods shall successfully satisfy the requirements of baseline study in accordance with certification and validation requirements detailed in the U.S. Army Chemical Materials Agency LMQAP.

During the initial baseline studies, all sampling and analysis operations shall be performed exactly as set forth in the applicable analytical procedures under similar operating conditions for instruments shown to be in control. Each NRT station and each historical method is an independent monitoring system and must pass the baseline requirements appropriate for that system on a per-station or per-method basis.

The continuing baseline study will be conducted to validate long-term performance of the monitoring systems. The continuing baseline study begins immediately after successful completion of the initial baseline.

For monitoring cessation less than 60 days, method re-certification baselines shall be performed in accordance with the U.S. Army Chemical Materials Agency LMQAP.

5.2 Calibration Requirements

ECBC shall have an established and documented calibration program. All monitoring and laboratory equipment used to support this mission shall be calibrated in accordance with the requirements detailed in the U.S. Army Chemical Materials Agency LMQAP and the ECBC LMQCP.

Calibration data shall be formatted to support storage and retrieval. Calibration records shall identify the following:

- Chemical name
- Date and time
- Instrument identification number
- Name or unique identification number of operator
- Calibration standard identification number
- Analyte standard introduction, where applicable.

5.3 Challenge Requirements

All instruments and monitoring methods used for the analysis of chemical agents shall be subject to periodic QC sample analysis for each chemical the instrument will analyze to check the process from sample collection through analysis. All instruments/methods will be challenged in accordance with criteria from the latest version of the U.S. Army Chemical Materials Agency LMQAP and the ECBC LMQCP.

5.4 Monitoring QC Data Statistical Validation

Statistical validation will be documented in reports, which will include QC data (i.e., calibrations, challenges), statistical analysis, and corrective actions. The MAP will submit the QC data to the RCMD mandated statistical program from baseline through the completion of closure https://home.cma.army.mil/qcdrs.

5.5 Equipment Acceptance Requirements

Monitoring equipment must be qualified by meeting or exceeding qualification requirements as specified in the latest version of the U.S. Army Chemical Materials Agency LMQAP and the ECBC LMQCP.

5.5.1 Acceptance Testing Requirements. Acceptance testing will demonstrate the ability of the equipment to properly collect, detect, and quantify the chemical compound of interest. Acceptance test pass/fail criteria and detailed requirements for equipment criteria are specified in the U.S. Army Chemical Materials Agency LMQAP.

6. LIMITING CONDITIONS OF OPERATION (LCOs)

All RCMD operations are governed by LCOs. The RCMD Site Manager will determine that all monitoring LCOs have been achieved on a daily basis before operations can commence.

7. NRT NOTIFICATIONS

In the event of an alarm, the MINICAMS operator will notify the Command Post. Further notifications will be the responsibility of the RCMD Site Manager. **Table Attachment F-3-5** lists several possible scenarios, persons to be notified, and possible actions to be taken.

During operations at RSA, the following NRT alarm setpoints will be used:

- For all agents and chemicals except for L, the alarm setpoint shall be 0.7Z at all monitoring locations.

- For L, the alarm setpoint shall be 0.4Z at all monitoring locations.

8. DOCUMENTATION

8.1 General Monitoring Documentation

During operations, monitoring personnel will maintain documentation of all monitoring activities. The documentation will include activity information on daily vapor monitoring, sample records,

Table Attachment F-3-5. NRT Alarm Notification Matrix

Situation	Notification	Possible Action[a]
Single MINICAMS® Alarm	• Command Post • SSHO	• Await result of next MINICAMS cycle • Evacuate non-essential personnel • Evaluate PPE • Analyze DAAMS tubes or assess colorimetric tube or dosimeter
Two Consecutive MINICAMS Alarms	• Command Post • SSHO	• Await result of next MINICAMS cycle • Evaluate PPE • Determine source of contamination
Three Consecutive MINICAMS Alarms	• Command Post • SSHO	• Determine source of contamination

Notes:

[a] This table is based on detection of chemical warfare materiel (CWM) at the alarm setpoint. Decision on actual actions taken will reside with the RCMD Site Manager. Actions may vary, depending on the actual concentration of CWM detected, the operation being performed, the location of the alarm, etc.

DAAMS = Depot Area Air Monitoring System
PPE = personal protective equipment
SSHO = Site Safety Health Officer

chain-of-custody (COC) forms or transfer of possession, sample analysis records, equipment calibration, equipment maintenance records, agent response, and Standing Operating Procedures (SOPs), and/or Internal Operating Procedures (IOPs) for vapor monitoring and laboratory analysis.

8.2 Alarm Confirmation Reports

In the event of a confirmed chemical agent alarm, the U.S. Army Chemical Materials Agency MCP requires that a confirmed chemical materiel report be compiled. The report shall contain the following information:

- Identification of the chemical materiel
- Sample ID Number\Sample Station
- Found concentration or positive agent identification, in milligrams per cubic meter (mg/m^3)

- Associated NRT reading (if applicable)
- Date, time, and location of reading or measurement
- QC sample results supporting the analytical results
- Statement on the quality of monitoring data and printouts of the actual data
- Any chemical materiel readings at any relevant stations at the site, destruction facility, or storage facility
- Description of site operations during the sample aspiration period
- A statement of the potential chemical compound's source
- Explanation of response or operator comments
- Name/unique ID number of operator collecting and analyzing the sample
- Analytical method used for analysis
- Analytical instrument ID.

8.3 Equipment Documentation

All MAP analytical equipment information will be documented by support personnel. The MAP personnel will document and maintain all acceptance test results for the equipment. Information regarding each instrument shall be documented in logbooks, an electronic database, or other applicable format.

8.4 Reference Standards

Standards received by the agent custodian or designated alternates will be maintained onsite, accounted for, undamaged, and properly labeled at all times.

9. TRAINING REQUIREMENTS

All EDS monitoring personnel are required to meet the minimum training requirements outlined in the OSHA standard Title 29 Code of Federal Regulations (CFR) 1910.120 covering Hazardous Waste Operations and Emergency Response (HAZWOPER). All monitoring and MAP personnel must also meet the training and certification criteria detailed in the U.S. Army Chemical Materials Agency LMQAP.

APPENDIX ATTACHMENT F-3-1
ACRONYMS/ABBREVIATIONS

(This page intentionally left blank.)

APPENDIX ATTACHMENT F-3-1
ACRONYMS/ABBREVIATIONS

AEL	airborne exposure limit
AFS	Air Filtration System
CCl_4	carbon tetrachloride
CFR	Code of Federal Regulations
CG	phosgene
CMA	U.S. Army Chemical Materials Activity
CN	chloroacetophenone
CNB	carbon tetrachloride + chloroacetophenone + benzene
CNS	chloroacetophenone + chloropicrin + chloroform
COC	chain of custody
CWA	chemical warfare agent
DA	diphenylchloroarsine
DAAMS	Depot Area Air Monitoring System
DHHS	Department of Health and Human Services
ECBC	Edgewood Chemical Biological Center
EDS	Explosive Destruction System
FM smoke	titanium tetrachloride
FS smoke	sulfur trioxide + chlorosulfonic acid
GC	gas chromatograph
GC/FPD	gas chromatograph/flame photometric detector
GC/MS	gas chromatograph/mass spectrometer
HAZWOPER	Hazardous Waste Operations and Emergency Response
HD	distilled sulfur mustard
HN-3	nitrogen mustard
HS	sulfur mustard

HT	mustard-T mixture
HTSL	heat-traced sample line
IOP	Internal Operating Procedure
L	lewisite
LCO	limiting condition of operation
LMQAP	Laboratory and Monitoring Quality Assurance Plan
LMQCP	Laboratory and Monitoring Quality Control Plan
MAP	Mobile Analytical Platform
MCP	Monitoring Concept Plan
mg/m^3	milligram per cubic meter
NRT	near real-time
OEL	occupational exposure limit
OSHA	Occupational Safety and Health Administration
P&A	precision and accuracy
PD	phenyldichloroarsine
PDS	Personnel Decontamination Station
PPE	personal protective equipment
PS	chloropicrin
QA	quality assurance
QA/QC	quality assurance/quality control
QC	quality control
RCMD	Recovered Chemical Materiel Directorate
RDT&E	research development, test, and evaluation
RSA	Redstone Arsenal
RSA-EDS	Redstone Arsenal Explosive Destruction System

SOP	Standing Operating Procedure
SSMP	Site-Specific Monitoring Plan
STEL	short-term exposure limit
TIC	toxic industrial chemical
VSL	vapor screening level
WPL	worker population limit

(This page intentionally left blank.)

APPENDIX ATTACHMENT F-3-2
MONITORING STRATEGY DURING MUSTARD OPERATIONS

(This page intentionally left blank.)

APPENDIX ATTACHMENT F-3-2
MONITORING STRATEGY DURING MUSTARD OPERATIONS

The following paragraphs describe the monitoring strategy that will be employed during EDS operations involving HS, HT, or HN-3 at the RSA-EDS site. HS and HT will be monitored for mustard (H) using distilled mustard (HD) as the challenge standard. Monitoring locations during mustard operations are illustrated in **Figure Appendix Attachment F-3-2-1**. **Table Appendix Attachment F-3-2-1** details the monitoring equipment that will be used during mustard operations.

1. NRT MONITORING

During HD, HS, or HT operations, NRT monitoring for worker protection will be conducted at the 15-minute STEL for H (0.003 mg/m^3) and process monitoring will be conducted at the VSL for HD (0.003 mg/m^3).

During HN-3 operations, NRT monitoring for worker protection will be conducted at the 15-minute STEL for HN-3 (0.003 mg/m^3) and process monitoring will be conducted at the VSL for HN-3 (0.003 mg/m^3).

NRT monitoring will be performed at several locations within the Environmental Enclosure as well as the AFS. NRT monitoring will take place at the locations discussed in the following paragraphs.

1.1 AFS

NRT monitoring will be performed at the midbed or the exhaust (stack) locations of the AFS. Monitoring will be performed using an HTSL interfaced with a MINICAMS® located in the monitoring shed.

The MINICAMS monitoring the AFS will operate in conjunction with an automatic stream selection system that allows collection and analysis of samples at each of the three levels of the midbed. In the event of an alarm at one of the midbed locations, the stream selection system will be manually switched to monitor the stack location.

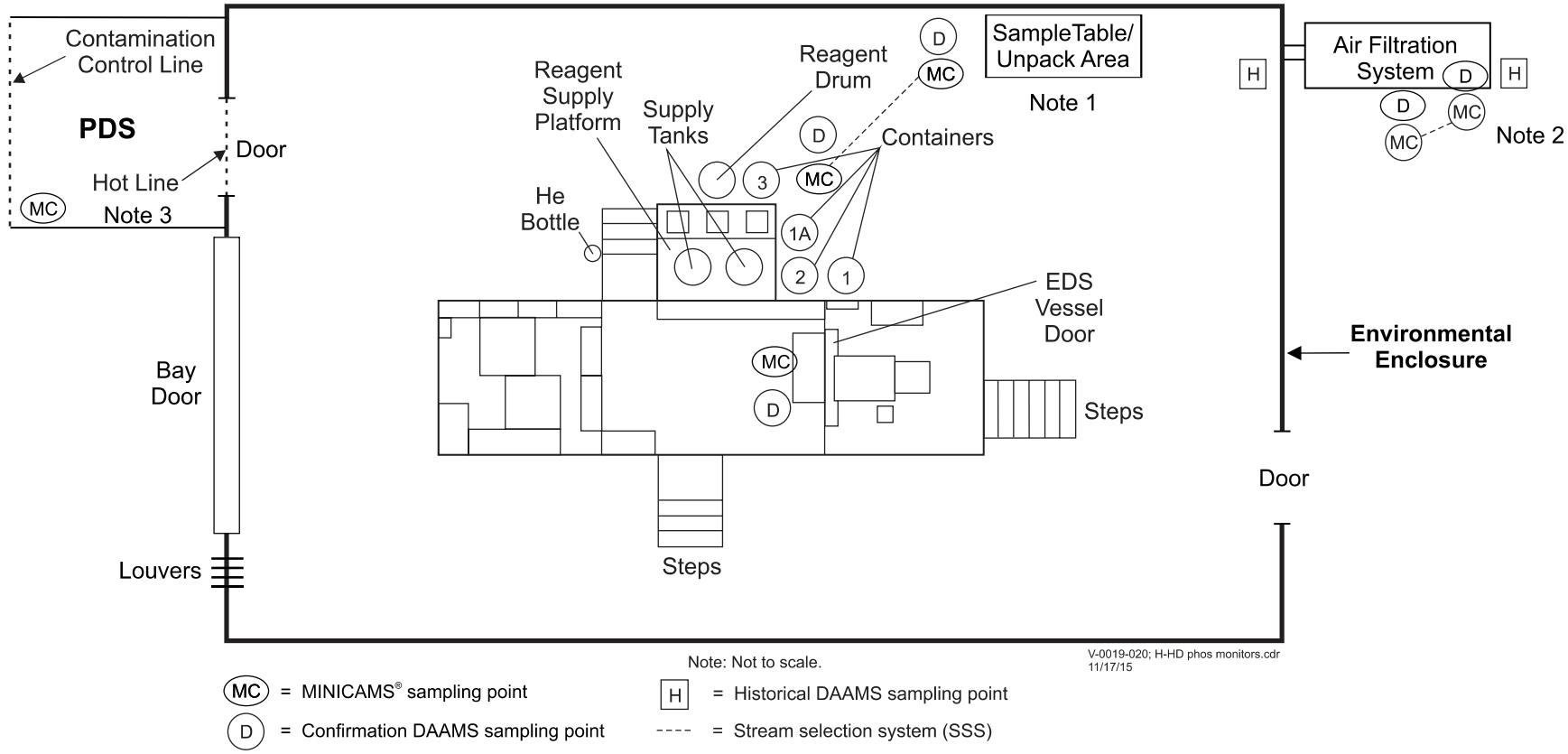

MC = MINICAMS® sampling point

D = Confirmation DAAMS sampling point

H = Historical DAAMS sampling point

---- = Stream selection system (SSS)

Note 1. According to the operation being performed, a single MINICAMS unit equipped with a Stream Selection System will be used to monitor either the sample table/unpack area or over the waste containers. The Stream Selection System will be manually switched, but in the event of an NRT alarm, will lock on the location of the alarm.

Note 2. The Air Filtration System (AFS) will be monitored with a single MINICAMS unit equipped with a Stream Selection System. The normal monitoring locations will be at the midbed location of each Air Filtration System. In the event of an alarm at either midbed location, the Stream Selection systems will be manually switched to monitor the stack locations.

Note 3. In the event the Personnel Decontamination Station (PDS) has an exit airlock, a MINICAMS will be available to monitor in the airlock.

1 Figure Appendix Attachment F-3-2-1. Monitoring Locations During HD/HS/HT/HN-3 Operations

Table Appendix Attachment F-3-2-1. Mustard Monitoring Application and Monitor Type

Analyte	Monitor/Equipment	Notes
NRT Monitoring[a]		
HD/HS/HT or HN-3	MINICAMS®	MINICAMS configured with a PCT and an XSD
Historical Monitoring[a]		
HD/HS/HT or HN-3	DAAMS; GC	Quantitative analysis
Confirmation of NRT Alarm[a]		
HD/HS/HT or HN-3	DAAMS; GC	Qualitative confirmation of MINICAMS alarm
Confirmation of Historical Monitoring[a,b]		
HD/HS/HT or HN-3	DAAMS; GC	Qualitative or quantitative confirmation of DAAMS

Notes:

[a] HD/HS/HT will be monitored as H.
[b] If historical DAAMS tubes are analyzed on a gas chromatograph/mass spectrometer (GC/MS), confirmation is not required.

DAAMS = Depot Area Air Monitoring System
GC = gas chromatograph
HN-3 = nitrogen mustard
HS = sulfur mustard
HT = mustard-T mixture
NRT = near real-time
PCT = preconcentrator tube
XSD = halogen selective detector

1.2 Sample Area/Unpack Area or Above Waste Containers

By employing the use of a stream selection device, a single MINICAMS will have the capability of monitoring at either the sample area/unpack area or the area above the waste containers. The stream selection device will be manually switched to the appropriate location depending on the operational procedure being performed at that time.

NRT monitoring of the sample area/unpack area will be performed using an HTSL interfaced with a MINICAMS located in the monitoring shed. The HTSL will be coiled and hung over the table in the unpack area such that it is approximately 2 feet above the unpack table.

NRT monitoring of the waste container area will be performed using an HTSL interfaced with a MINICAMS located in the monitoring shed. The HTSL will be coiled and hung over the waste containers such that it is approximately 2 feet above the containers.

1.3 Above EDS Containment Vessel

NRT monitoring of the Containment Vessel will be performed using an HTSL interfaced with a MINICAMS located in the monitoring shed. The HTSL will be coiled and hung over the Containment Vessel such that it is approximately 2 feet above and slightly in front of the Containment Vessel door.

1.4 Personnel Decontamination Station (PDS)

NRT monitoring inside the PDS will be performed using an HTSL interfaced with a MINICAMS located in the monitoring shed. The HTSL will be coiled and hung on the wall. In the event the PDS has an exit airlock, a MINICAMS will be available to monitor in the airlock.

2. CONFIRMATION MONITORING

DAAMS tube station for confirmation of NRT alarms will be co-located at all NRT monitoring locations.

2.1 AFS

Confirmation DAAMS will be co-located at the distal ends of the MINICAMS HTSLs located inside the midbed and stack of the AFS. DAAMS tube stations that allow collection and analysis of samples at each of the three levels of the midbed and the stack of the AFS will be used to collect confirmation DAAMS tube samples in the event of an NRT alarm.

2.2 EDS Containment Vessel

Confirmation DAAMS will be co-located at the distal end of the MINICAMS HTSL located over the EDS Containment Vessel to collect confirmation DAAMS tubes in the event of an NRT alarm.

2.3 Sample Table/Unpack Area

Confirmation DAAMS will be co-located at the distal end of the MINICAMS HTSL located in the vicinity of the sample table/unpack area to collect confirmation DAAMS tubes in the event of an NRT alarm.

2.4 Waste Containers

Confirmation DAAMS will be co-located at the distal end of the MINICAMS HTSL located over the EDS waste containers to collect confirmation DAAMS tube samples in the event of an NRT alarm.

3. HISTORICAL MONITORING

DAAMS tube stations for historical monitoring at the WPL will be located near the filter inlet and historical monitoring at the VSL will be located at the filter exhaust (stack). Each station will consist of a primary and a confirmation/duplicate tube.

4. MINICAMS ALARM SETPOINTS

The MINICAMS alarm setpoint will be 0.7Z, where Z represents the monitoring level (AEL).

(This page intentionally left blank.)

APPENDIX ATTACHMENT F-3-3
MONITORING STRATEGY DURING L OPERATIONS

(This page intentionally left blank.)

APPENDIX ATTACHMENT F-3-3
MONITORING STRATEGY DURING L OPERATIONS

The following paragraphs describe the monitoring strategy that will be employed during EDS operations involving L at the RSA-EDS site. Monitoring locations during L operations are illustrated in **Figure Appendix Attachment F-3-3-1**. **Table Appendix Attachment F-3-3-1** details the monitoring equipment that will be used during L operations.

1. NRT MONITORING

NRT monitoring for worker protection will be conducted at the 15-minute STEL for L (0.003 mg/m^3) and process monitoring will be conducted at the VSL for L (0.003 mg/m^3).

NRT monitoring will be performed at several locations within the Environmental Enclosure as well as the AFS. NRT monitoring will take place at the locations discussed in the following paragraphs.

1.1 AFS

NRT monitoring will be performed at the midbed or the exhaust (stack) locations of the AFS. Monitoring will be performed using an HTSL interfaced with a MINICAMS® located in the monitoring shed.

The MINICAMS monitoring the AFS will operate in conjunction with an automatic stream selection system that allows collection and analysis of samples at each of the three levels of the midbed. In the event of an alarm at one of the midbed locations, the stream selection system will be manually switched to monitor the stack location.

1.2 Sample Area/Unpack Area or Above Waste Containers

By employing the use of a stream selection device, a single MINICAMS will have the capability of monitoring at either the sample area/unpack area or the area above the waste containers. The stream selection device will be manually switched to the appropriate location depending on the operational procedure being performed at that time.

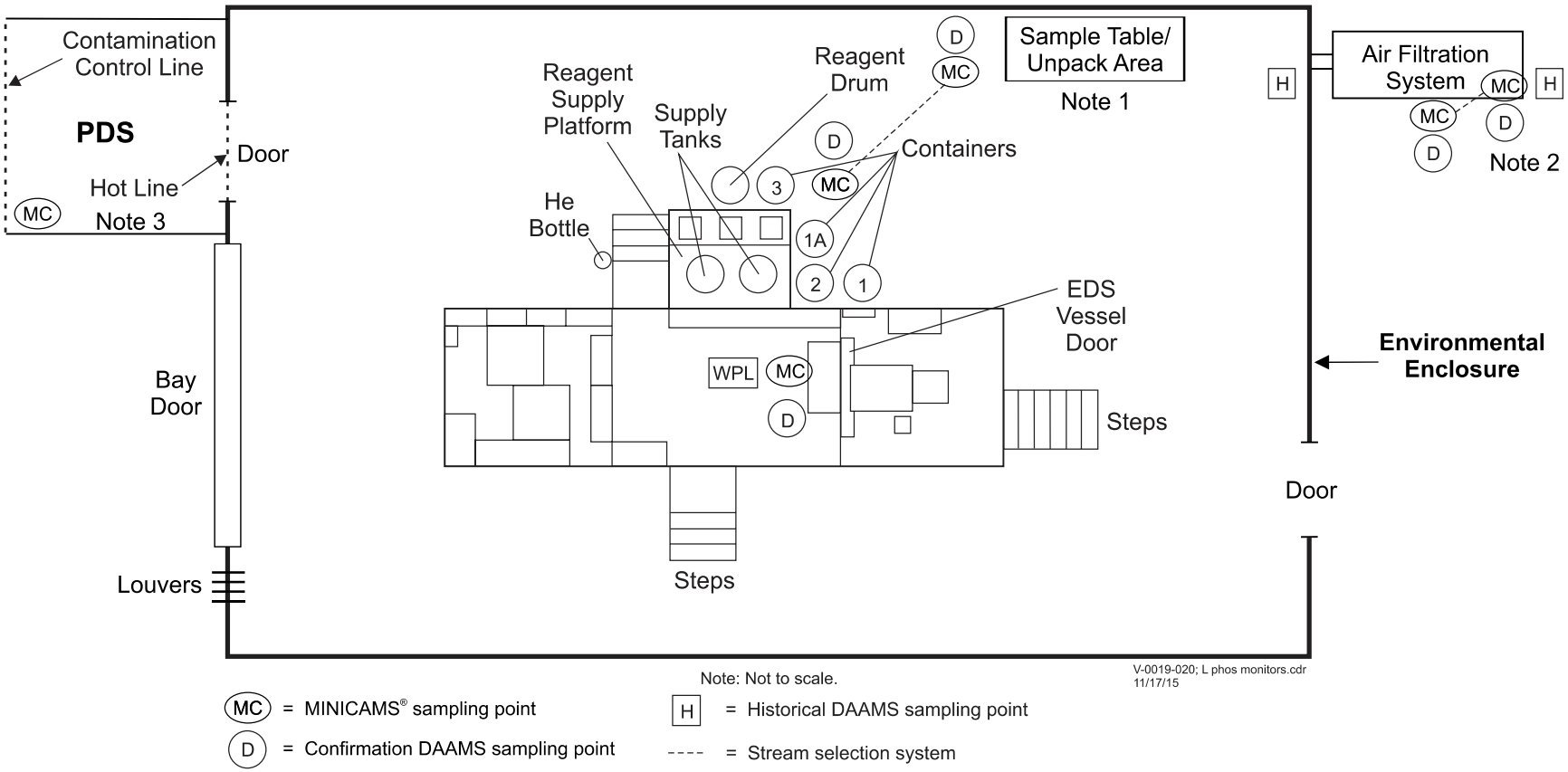

MC = MINICAMS® sampling point

D = Confirmation DAAMS sampling point

H = Historical DAAMS sampling point

---- = Stream selection system

Note 1. According to the operation being performed, a single MINICAMS unit equipped with a Stream Selection System will be used to monitor either the sample table/unpack area or over the waste containers. The Stream Selection System will be manually switched, but in the event of an NRT alarm, will lock on the location of the alarm.

Note 2. The Air Filtration System (AFS) will be monitored with a single MINICAMS unit equipped with a Stream Selection System. The normal monitoring locations will be at the midbed location of each Air Filtration System. In the event of an alarm at either midbed location, the Stream Selection systems will be manually switched to monitor the stack locations.

Note 3. In the event the Personnel Decontamination Station (PDS) has an exit airlock, a MINICAMS will be available to monitor in the airlock.

1 Figure Appendix Attachment F-3-3-1. Monitoring Locations During L Operations

Table Appendix Attachment F-3-3-1. L Monitoring Application and Monitor Type

Analyte	Monitor/Equipment	Notes
NRT Monitoring		
L	MINICAMS®[a]	MINICAMS configured with a PCT and an XSD
Historical Monitoring		
L	DAAMS[b]; GC	Quantitative analysis
Confirmation of NRT Alarm		
L	DAAMS[b]; GC	Qualitative confirmation of MINICAMS alarm
Confirmation of Historical Monitoring[c]		
L	DAAMS[b]; GC	Qualitative or quantitative confirmation of historical DAAMS

Notes:

[a] L MINICAMS analysis requires L to be derivatized. Derivatization is performed by using an L derivatization module, which reacts L with ethanedithiol.

[b] L DAAMS analysis requires L to be derivatized. Derivatization is performed by using an L derivatization module, which reacts L with beta mercaptoethanol.

[c] If historical DAAMS tubes are analyzed on a gas chromatograph-mass spectrometer (GC-MS), confirmation is not required.

DAAMS = Depot Area Air Monitoring System
GC = gas chromatograph
L = lewisite
NRT = near real-time
PCT = preconcentrator tube
XSD = halogen selective detector

NRT monitoring of the sample area/unpack area will be performed using an HTSL interfaced with a MINICAMS located in the monitoring shed. The HTSL will be coiled and hung over the table in the unpack area such that it is approximately 2 feet above the unpack table.

NRT monitoring of the waste container area will be performed using an HTSL interfaced with a MINICAMS located in the monitoring shed. The HTSL will be coiled and hung over the waste containers such that it is approximately 2 feet above the containers.

1.3 Above EDS Containment Vessel

NRT monitoring of the Containment Vessel will be performed using an HTSL interfaced with a MINICAMS located in the monitoring shed. The HTSL will be coiled and hung over the Containment Vessel such that it is approximately 2 feet above and slightly in front of the Containment Vessel door.

1.4 PDS

NRT monitoring inside the PDS will be performed using an HTSL interfaced with a MINICAMS located in the monitoring shed. The HTSL will be coiled and hung on the wall. In the event the PDS has an exit airlock, a MINICAMS will be available to monitor in the airlock.

2. CONFIRMATION MONITORING

DAAMS tube stations for confirmation of NRT L alarms will be co-located at all NRT monitoring locations.

2.1 AFS

Confirmation DAAMS will be co-located at the distal ends of the MINICAMS HTSLs located inside the midbed and stack of the AFS. DAAMS tube stations that allow collection and analysis of samples at each of the three levels of the midbed or the stack of the AFS will be used to collect confirmation DAAMS tube samples in the event of an NRT alarm.

2.2 Above the EDS Containment Vessel

Confirmation DAAMS will be co-located at the distal end of the MINICAMS HTSL located over the EDS Containment Vessel to collect confirmation DAAMS tubes in the event of an NRT alarm.

2.3 Sample Table/Unpack Area

Confirmation DAAMS will be co-located at the distal end of the MINICAMS HTSL located over the EDS sample table/unpack area to collect confirmation DAAMS tubes in the event of an NRT alarm.

2.4 Waste Containers

Confirmation DAAMS will be co-located at the distal end of the MINICAMS HTSL located over the EDS waste containers to collect confirmation DAAMS tubes in the event of an NRT alarm.

3. HISTORICAL MONITORING

DAAMS tube stations for historical monitoring at the WPL will be located near the filter inlet and historical monitoring at the VSL will be located at the filter exhaust (stack). Each station will consist of a primary and a confirmation/duplicate tube.

4. MINICAMS ALARM SETPOINTS

The MINICAMS alarm setpoint will be 0.4Z, where Z represents the monitoring level (AEL).

(This page intentionally left blank.)

APPENDIX ATTACHMENT F-3-4

MONITORING STRATEGY DURING CNB AND CNS OPERATIONS

(This page intentionally left blank.)

APPENDIX ATTACHMENT F-3-4
MONITORING STRATEGY DURING CNB AND CNS OPERATIONS

The following paragraphs describe the monitoring strategy that will be employed during EDS operations involving CNB and/or CNS at the RSA-EDS site. Monitoring locations during CNB operations are illustrated in **Figure Appendix Attachment F-3-4-1**. Monitoring locations during CNS operations are illustrated in **Figure Appendix Attachment F-3-4-2**. **Table Appendix Attachment F-3-4-1** details the monitoring equipment that will be used during CNB and CNS operations.

1. NRT MONITORING

NRT monitoring for worker protection and process monitoring will be performed during CNB and CNS operations.

NRT monitoring will be conducted at the 15-minute STEL for carbon tetrachloride (CCl_4) (63 mg/m^3) during CNB operations.

NRT monitoring at the 15-minute STEL will be conducted for chloropicrin (PS) (21.4 mg/m^3) and chloroform (39.1 mg/m^3) during CNS operations.

NRT monitoring will be performed at several locations within the Environmental Enclosure as well as the AFS. NRT monitoring will take place at the locations discussed in the following paragraphs.

1.1 AFS

NRT monitoring will be performed at the midbed or the exhaust (stack) locations of the AFS. Monitoring will be performed using an HTSL interfaced with a MINICAMS located in the monitoring shed.

The MINICAMS monitoring the AFS will operate in conjunction with an automatic stream selection system that allows collection and analysis of samples at each of the three levels of the midbed. In the event of an alarm at one of the midbed locations, the stream selection system will be manually switched to monitor the stack location.

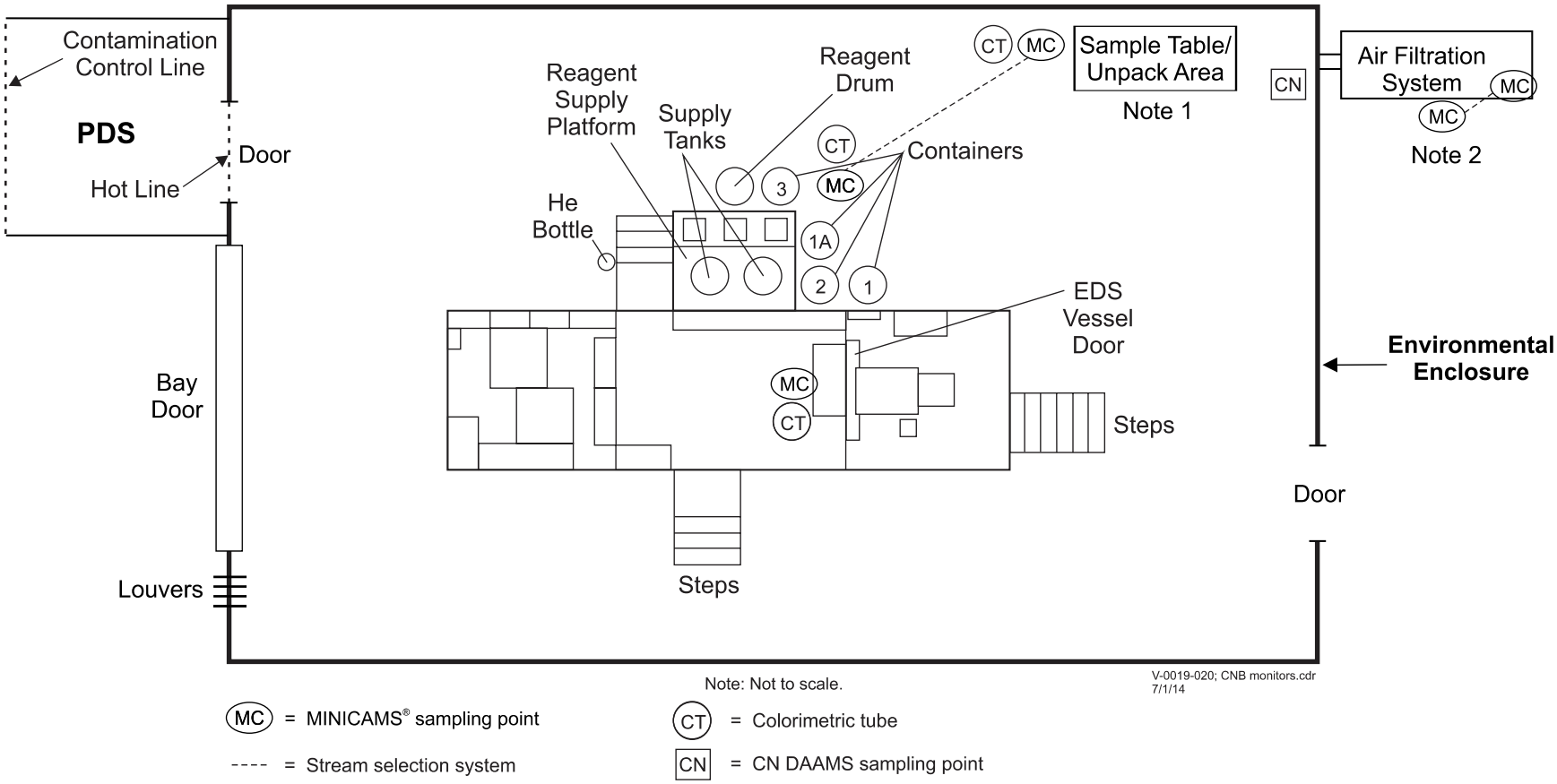

Note 1. According to the operation being performed, a single MINICAMS unit equipped with a Stream Selection System will be used to monitor either the sample table/unpack area or over the waste containers. The Stream Selection System will be manually switched, but in the event of an NRT alarm, will lock on the location of the alarm.

Note 2. The Air Filtration System (AFS) will be monitored with a single MINICAMS unit equipped with a Stream Selection System. The normal monitoring locations will be at the midbed location of each Air Filtration System. In the event of an alarm at either midbed location, the Stream Selection systems will be manually switched to monitor the stack locations.

1 Figure Appendix Attachment F-3-4-1. Monitoring Locations During CNB Chemical Fill Operations

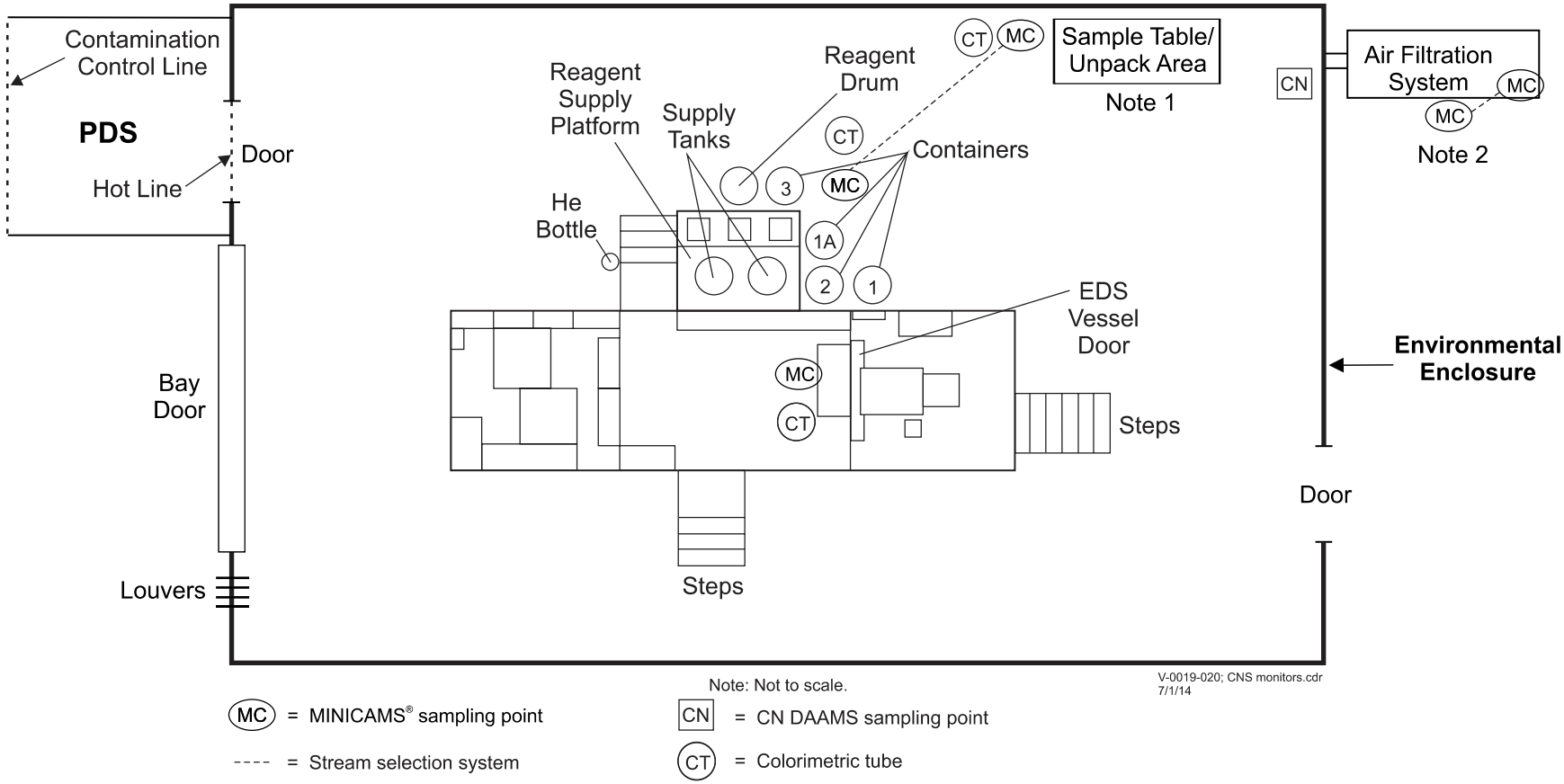

Note 1. According to the operation being performed, a single MINICAMS unit equipped with a Stream Selection System will be used to monitor either the sample table/unpack area or over the waste containers. The Stream Selection System will be manually switched, but in the event of an NRT alarm, will lock on the location of the alarm.

Note 2. The Air Filtration System (AFS) will be monitored with a single MINICAMS unit equipped with a Stream Selection System. The normal monitoring locations will be at the midbed location of each Air Filtration System. In the event of an alarm at either midbed location, the Stream Selection systems will be manually switched to monitor the stack locations.

1 Figure Appendix Attachment F-3-4-2. Monitoring Locations During CNS Chemical Fill Operations

Table Appendix Attachment F-3-4-1. CNB and CNS Monitoring Application and Monitor Type

Monitoring Type	Monitor/Equipment	Notes
NRT Monitoring[a]		
CCl_4	MINICAMS	MINICAMS configured with a sample loop and XSD
PS and $CHCl_3$	MINICAMS	MINICAMS configured with a sample loop and XSD
Confirmation of NRT Alarm[b,c]		
CCl_4, PS, and $CHCl_3$[d]	Colorimetric tubes	Qualitative confirmation of MINICAMS alarms
Historical CN Monitoring		
CN	DAAMS	Quantitative analysis

Notes:

[a] During EDS operations, MINICAMS® will be configured to monitor the industrial chemical being treated according to the campaign.
[b] Industrial chemicals do not require historical monitoring.
[c] Not applicable at the Air Filtration System midbed and stack.
[d] Colorimetric tubes will be available to measure CCl_4 in the range of 1.0 to 15.0 parts per millions (ppm), PS in the range of 0.1 to 2.0 ppm, and $CHCl_3$ in the range of 2.0 to 10.0 ppm.

CCl_4 = carbon tetrachloride
$CHCl_3$ = chloroform
CN = chloroacetophenone
DAAMS = Depot Area Air Monitoring System
NRT = near real-time
PS = chloropicrin
XSD = halogen-specific detector

1.2 Sample Table/Unpack Area or Above Waste Containers

By employing the use of a stream selection device, a single MINICAMS will have the capability of monitoring at either the sample area/unpack area or the area above the waste containers. The stream selection device will be manually switched to the appropriate location depending on the operational procedure being performed at that time.

NRT monitoring of the sample area/unpack area will be performed using an HTSL interfaced with a MINICAMS located in the monitoring shed. The HTSL will be coiled and hung over the table in the unpack area such that it is approximately 2 feet above the unpack table.

NRT monitoring of the waste container area will be performed using an HTSL interfaced with a MINICAMS located in the monitoring shed. The HTSL will be coiled and hung over the waste containers such that it is approximately 2 feet above the containers.

1.3 Above EDS Containment Vessel

NRT monitoring of the Containment Vessel will be performed using an HTSL interfaced with a MINICAMS located in the monitoring shed. The HTSL will be coiled and hung over the Containment Vessel such that it is approximately 2 feet above and slightly in front of the Containment Vessel door.

2. CONFIRMATION MONITORING

Colorimetric tubes specific for each chemical of concern will be available to validate any MINICAMS alarms above the EDS Containment Vessel, at the unpack area/sample table, and above the waste containers.

MINICAMS alarms in the AFS will not be validated and will be considered true positives in the event of three consecutive alarms.

3. HISTORICAL MONITORING

Historical monitoring is not required for CN chemical fills; however, a DAAMS sampling station for CN will be located near the inlet of the AFS.

4. MINICAMS ALARM SETPOINTS

During CNS operations, the MINICAMS alarm setpoint will be 0.7Z of the chloroform STEL.

During CNB operations, the MINICAMS alarm setpoint will be 0.7Z of the CCl_4 STEL.

APPENDIX ATTACHMENT F-3-5
MONITORING STRATEGY DURING CG OPERATIONS

(This page intentionally left blank.)

APPENDIX ATTACHMENT F-3-5
MONITORING STRATEGY DURING CG OPERATIONS

The following paragraphs describe the monitoring strategy that will be employed during EDS operations involving CG at the RSA-EDS site. Monitoring locations during CG operations are illustrated in **Figure Appendix Attachment F-3-5-1**. **Table Appendix Attachment F-3-5-1** details the monitoring equipment that will be used during CG operations.

1. NRT MONITORING

NRT monitoring for worker protection and process monitoring will be conducted at the 15-minute STEL for CG (12.8 mg/m^3).

NRT monitoring will be performed at several locations within the Environmental Enclosure as well as the AFS. NRT monitoring will take place at the locations discussed in the following paragraphs.

1.1 AFS

NRT monitoring will be performed at the midbed or the exhaust (stack) locations of the AFS. Monitoring will be performed using an HTSL interfaced with a MINICAMS located in the monitoring shed.

The MINICAMS monitoring the AFS will operate in conjunction with an automatic stream selection system that allows collection and analysis of samples at each of the three levels of the midbed. In the event of an alarm at one of the midbed locations, the stream selection system will be manually switched to monitor the stack location.

1.2 Sample Area/Unpack Area or Above Waste Containers

By employing the use of a stream selection device, a single MINICAMS will have the capability of monitoring at either the sample area/unpack area or the area above the waste containers. The stream selection device will be manually switched to the appropriate location depending on the operational procedure being performed at that time.

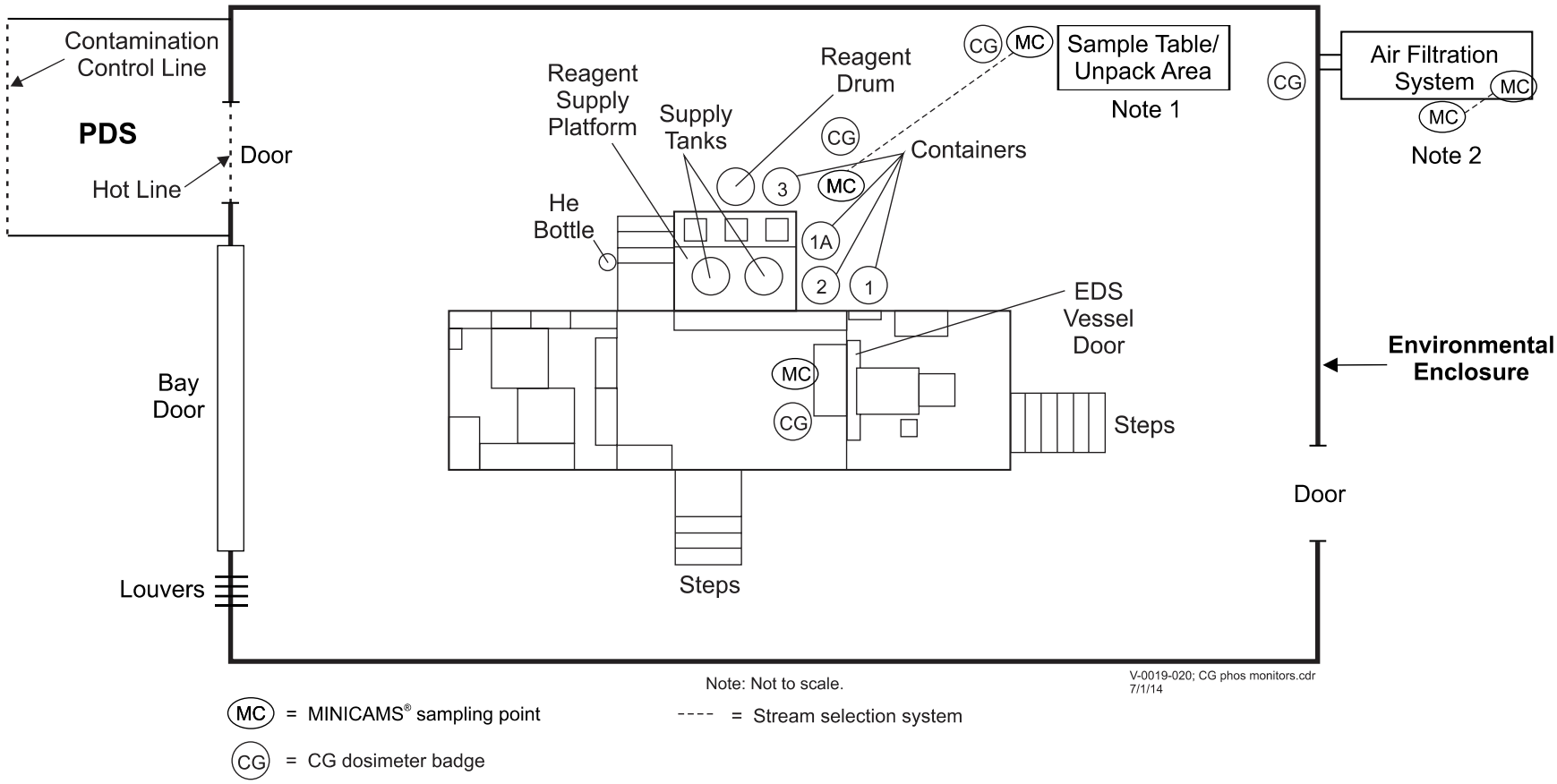

Note 1. According to the operation being performed, a single MINICAMS unit equipped with a Stream Selection System will be used to monitor either the sample table/unpack area or over the waste containers. The Stream Selection System will be manually switched, but in the event of an NRT alarm, will lock on the location of the alarm.

Note 2. The Air Filtration System (AFS) will be monitored with a single MINICAMS unit equipped with a Stream Selection System. The normal monitoring locations will be at the midbed location of each Air Filtration System. In the event of an alarm at either midbed location, the Stream Selection systems will be manually switched to monitor the stack locations.

1 Figure Appendix Attachment F-3-5-1. Monitoring Locations During CG Operations

Table Appendix Attachment F-3-5-1. CG Monitoring Application and Monitor Type

Analyte	Monitor/Equipment	Notes
NRT Monitoring		
CG	MINICAMS®	MINICAMS configured with a sample loop and an XSD
Confirmation of NRT Alarm		
CG	Dosimeter badges	Qualitative confirmation of MINICAMS alarm

Notes:

CG = phosgene
NRT = near real-time
XSD = halogen selective detector

NRT monitoring of the sample area/unpack area will be performed using an HTSL interfaced with a MINICAMS located in the monitoring shed. The HTSL will be coiled and hung over the table in the unpack area such that it is approximately 2 feet above the unpack table.

NRT monitoring of the waste container area will be performed using an HTSL interfaced with a MINICAMS located in the monitoring shed. The HTSL will be coiled and hung over the waste containers such that it is approximately 2 feet above the containers.

1.3 Above EDS Containment Vessel

NRT monitoring of the Containment Vessel will be performed using an HTSL interfaced with a MINICAMS located in the monitoring shed. The HTSL will be coiled and hung over the Containment Vessel such that it is approximately 2 feet above and slightly in front of the Containment Vessel door.

2. CONFIRMATION MONITORING

CG dosimeter badges will be co-located with the distal ends of each HTSL located above the EDS Containment Vessel, at the unpack area/sample table, and above the waste containers to validate CG NRT alarms.

MINICAMS alarms in the AFS will not be validated and will be considered true positives in the event of three consecutive alarms. In addition, a CG dosimeter badge will be located near the inlet of the AFS. In the event of an alarm in the AFS, this dosimeter badge will be assessed to determine if CG was detected in the vapor prior to entering the inlet.

3. HISTORICAL MONITORING

Historical monitoring is not required during CG operations.

4. MINICAMS ALARM SETPOINTS

The MINICAMS alarm setpoint will be 0.7Z of the CG STEL.

APPENDIX ATTACHMENT F-3-6
REFERENCES

(This page intentionally left blank.)

APPENDIX ATTACHMENT F-3-6
REFERENCES

Department of the Army, Memorandum, Subject: *Interim Guidance on Occupational Health Practices for the Evaluation and Control of Occupational Exposures to Nerve Agents GA, GB, GD, GF, and VX and Mustard Agents H, HD, and HT*, 6 November 2012.

Department of the Army Pamphlet 385-61, *Toxic Chemical Agent Safety Standards*, 13 November 2012.

Edgewood Chemical Biological Center, Environmental Monitoring Laboratory, *Laboratory and Monitoring Quality Control Plan for Chemical Materials Agency (CMA) and for Chemical Agent Standard Analytical Reference Material (CASARM)*, most recent version.

U.S. Army Chemical Materials Agency, *Programmatic Laboratory and Monitoring Quality Assurance Plan*, most recent version.

U.S. Army Chemical Materials Agency, *Programmatic Monitoring Concept Plan*, most recent version.

(This page intentionally left blank.)

SECTION G
CONTINGENCY PLAN

[40 CFR 264.50 through 264.56; AAC 335-14-5-.04]

This Contingency Plan is submitted in accordance with the requirements for a Contingency Plan as contained in Standards for Owners and Operators of Hazardous Waste Treatment, Storage, and Disposal Facilities, 40 CFR 264 Subpart D, Contingency Plan and Emergency Procedures (AAC 335-14-5-.04). The purpose of the Contingency Plan is to minimize hazards to human health and the environment from fires, explosions, and any unplanned sudden or non-sudden release of hazardous waste constituents to air, soil, or surface water associated with the Redstone Arsenal-Explosive Destruction System (RSA-EDS) site operations. The provisions of this Contingency Plan will be carried out immediately by RSA-EDS site personnel whenever there is a fire, explosion, or any unexpected, unplanned release of hazardous materials, hazardous waste, or hazardous waste constituents at the RSA-EDS site that could threaten human health or the environment.

The Redstone Arsenal (RSA) *Oil and Hazardous Substance Spill Prevention and Response Plan* will be implemented should an incident involving chemical agent occur outside engineering controls or require supplies or other resources beyond the capability of the RSA-EDS site supplies and resources.

Should an incident involving only non-chemical agent hazardous wastes or materials occur outside engineering controls or beyond the capability of the RSA-EDS site, RSA will implement the RSA *Oil and Hazardous Substance Spill Prevention and Response Plan*, which serves as the single operational document for responding to oil and hazardous substance spills occurring on RSA. The RSA *Oil and Hazardous Substance Spill Prevention and Response Plan* also details the actions that will take place if a nonagent-related spill or release occurs.

Additionally, THE RED PLAN (an addendum to the RSA *Oil and Hazardous Substance Spill Prevention and Response Plan*) details initial emergency response actions and serves as a jump-start to the RSA *Oil and Hazardous Substance Spill Prevention and Response Plan* in the event of a spill of oil or a hazardous substance. Therefore, the current RSA *Oil and Hazardous Substance Spill Prevention and Response Plan* is hereby adopted and referenced in whole in this Contingency Plan.

Incidental releases or spills occurring within engineering controls, or for an incident that can be managed using available RSA-EDS site supplies and resources, will be managed by RSA-EDS site personnel using

this Contingency Plan. An incidental release is a release of hazardous waste/materials or waste constituents, including chemical agent, where the substance can be absorbed, neutralized, contained, or otherwise controlled by personnel in the immediate release area using emergency equipment on-hand. Spills beyond the management capability of the RSA-EDS Recovered Chemical Materiel Directorate (RCMD) Site Manager will be managed by RSA personnel under the RSA *Oil and Hazardous Substance Spill Prevention and Response Plan*, as applicable.

The RCMD Site Manager or Safety and Health Officer (SHO) will be responsible for ensuring the appropriate response procedures are followed. The Command Post will be notified if any emergency or spill release (that threatens public health or environment) occurs. A copy of this Contingency Plan will be maintained at the EDS Command Post.

This Contingency Plan will be reviewed and amended in the event of any of the following:

- The Resource Conservation and Recovery Act (RCRA) Permit is revised.
- This Contingency Plan fails in a test or actual emergency.
- Changes occur in the design, construction, operation, maintenance, or other areas of the RSA-EDS site operation in a way that increases the potential for fires, explosions, or releases of hazardous waste/materials or hazardous constituents, or changes the response necessary in an emergency.
- The list of emergency coordinators changes.
- The list of emergency equipment changes.

All site workers will be trained on emergency procedures, including communications and alarm systems, notifications, evacuation, and reporting. Selected site personnel will have training and certification in first aid and cardiopulmonary resuscitation (CPR) and use of an automated external defibrillator (AED). A first aid kit and AED will be onsite during all operations.

In the event of an emergency, the RSA Fire Department (911) will be notified. The RSA Fire Department has the authority to commit resources needed to manage emergency situations and clean up spills or other releases.

A copy of this Contingency Plan and all revisions to the plan will be maintained at the facility and submitted to all local law enforcement departments, fire departments, hospitals, and State and local emergency response teams [including the Alabama Department of Environmental Management (ADEM) Field Operations Division], that may be called upon to provide emergency services.

1 (This page intentionally left blank.)

G-1 GENERAL INFORMATION

The hazardous waste management units addressed in this permit modification application will be located at RSA in Madison County, Alabama. **Figure G-1-1**[1] depicts a generic EDS site layout. Up to two Explosive Destruction System (EDS) units may be located at the RSA-EDS site. The RSA-EDS site will be located within the 8200 series block of the RSA storage igloos area (see **Figure B-1-1** of this permit modification application).

The EDS units will be used to detonate recovered munitions and other items that contain chemical agent or industrial chemical fills followed by treatment of chemical fill/explosive residues and metal parts and fragments with chemical reagents. Detailed descriptions of EDS operations and equipment are provided in **Section D** of this permit modification application.

[1] All figures are located at the end of this section.

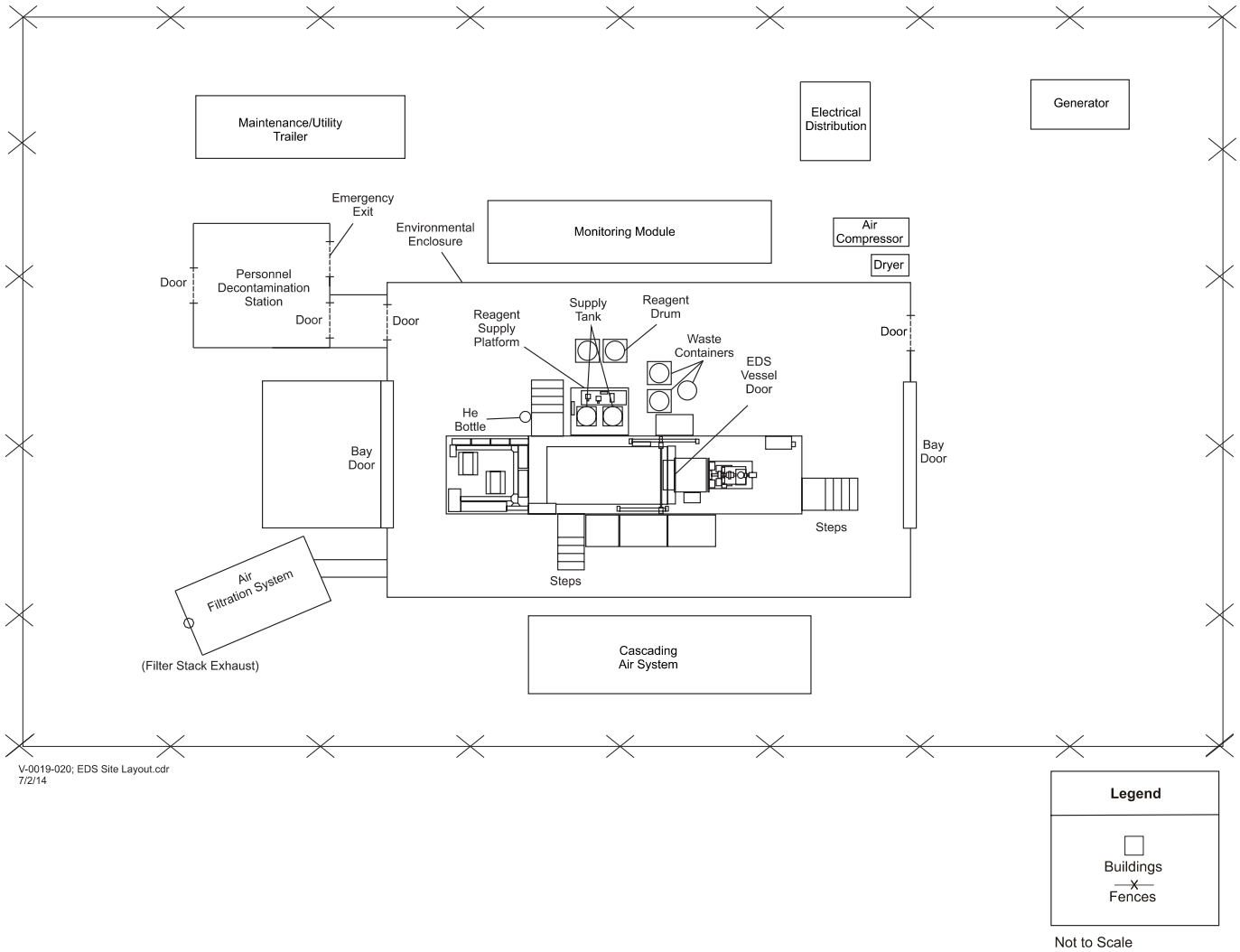

Figure G-1-1. Example EDS Site Layout[2]

[2] The figure depicts an example EDS layout; however, final placement of equipment may change or number of EDS units may be increased to two.

G-2 EMERGENCY COORDINATOR [40 CFR 264.52(d) and 264.55; AAC 335-14-5-.04(3)(d) and 335-14-5-.04(6)]

For any chemical agent or hazardous waste/hazardous material spill or release at the RSA-EDS site, the RCMD Site Manager will act as the emergency coordinator and will be called. Releases or spills occurring within engineering controls or for an incident at the EDS site that can be managed using available RSA-EDS site supplies and resources will be managed by EDS site personnel. Spills beyond the management capability of RSA-EDS site personnel will be managed by RSA personnel under their emergency response procedures. Based on assessment, the RCMD Site Manager or designee will notify the RSA Fire Department if any emergency or release condition occurs. A copy of the RSA-EDS Contingency Plan will be maintained at the RSA-EDS Command Post.

In the event of an emergency that cannot be managed by EDS site personnel, the RSA Fire Department (911) will be notified and will be the first responder on the scene. The RSA Fire Department has the authority to commit resources needed to manage emergency situations and clean up spills or other releases.

The Fire Department will immediately notify the Chief, Environmental Management Division (EMD), the primary emergency coordinator. The RSA Senior Fire Officer, who responds, will immediately assume the duties as Incident Commander (IC) and will relinquish these duties only when relieved by the Chief, EMD (or a designee). The Chief, EMD (or designee) will take over and assume the role of On-Scene Coordinator (OSC) upon arrival at the scene. The alternate emergency coordinator is the Chief, Installation Compliance Division.

Four fire stations are present at RSA as shown in **Table G-2-1**.[1]

RSA emergency responders, including fire and medical personnel, will be on duty during EDS operations. The RSA Fire Department, Huntsville Emergency Management System, Inc. (HEMSI), and the Huntsville Hospital will provide emergency and medical response to the RSA-EDS site at the request of the RCMD Site Manager.

The Chief, EMD will notify and assemble members of the Installation Response Team (IRT), key responders, or spill release contractor personnel, as needed for additional support, based on the severity of

[1] All tables are located at the end of this section.

the incident. When the IRT is activated, additional emergency personnel are activated, including the Safety Officer; Chief, Engineering Division, Department of Public Works (DPW); and Directorate of Emergency Services (DES). Upon activation, the IRT works under the supervision of the OSC.

The Chief, EMD, or a designated representative (such as the alternate emergency coordinator) assumes duties as the OSC and is the qualified individual having full authority to implement the installation RED PLAN.

During non-working hours, RSA spill response remains the same as for normal hours, with the following exceptions:

1. During off-duty hours, the primary OSC may not be present, and alternates or designated representatives may have to be called or report to the incident site if required. The Installation Operations Center (IOC) can be contacted 24 hours a day (256-313-1043).

2. The HEMSI function will be replaced with a contracted ambulance and Emergency Medical Technician (EMT) crew.

The RSA IOC maintains an up-to-date call list with home telephone numbers for all emergency coordinators. The RSA Fire Department can be reached by dialing 911.

Table G-2-2 lists key organizations and phone numbers.

A detailed description of the RSA emergency response organization and designated personnel for a spill or release of agent-related hazardous waste is provided in the RSA *Oil and Hazardous Substance Spill Prevention and Response Plan*, which is a single operational source document designed to meet the combined regulatory requirements for an Environmental Protection Agency (EPA) Spill Prevention, Control, and Countermeasure (SPCC) Plan, and a U.S. Army Installation Spill Contingency Plan (ISCP).

The RSA *Oil and Hazardous Substance Spill Prevention and Response Plan*, Annex B, lists names and 24-hour telephone numbers of the primary and alternate emergency coordinators.

Table G-2-1. RSA Fire Stations

Fire Station	Building No.	Location	Phone	Alt. Phone
1	Bldg 4424	Rideout Road	256-876-5974	256-876-3437
2	Bldg 3320	Vincent Road	256-876-1130	256-876-3014
3	Bldg 7801	Corner Patton & Redstone Roads	256-876-1316	256-876-3763
4	Bldg 4813	Air Field	256-876-3825	256-876-9689

Table G-2-2. Key Organizations and Telephone Numbers

Title	Telephone Number
Fire Department (Initial response-Senior Fire Officer acts as IC)	911[a]
RSA Directorate of Emergency Services (DES) Law Enforcement	911[a]
Chief, Environmental Management Division (EMD)-Primary Emergency Coordinator, OSC, and Primary Qualified Individual	256-955-6967 256-313-2066 (24 Hour)
Chief, Installation Compliance Division (Alternate Emergency Coordinator and Qualified Individual)	256-955-8505 256-313-2066 (24 hour)
Installation Operations Center (IOC)	256-313-1043 (24 Hour)
Garrison Safety Office	256-313-3297
Directorate Public Works (Contracting Officer's Representative)	256-876-4132
Installation Support Services Contractor (Base Operations Contract Management Services)	256-876-2007
Alabama Department of Environmental Management (ADEM), Decatur Branch Field Office	256-353-1713
ADEM	800-843-0699 (24 hour)
National Response Center (NRC)	800-424-8802

Note:

[a] If caller is using a cell phone for dialing 911, call will be dispatched to Madison County Sheriff's Department. Caller must tell dispatcher that they are located on RSA.

IC = Incident Commander
OSC = On-Scene Coordinator

G-3 IMPLEMENTATION [40 CFR 264.51, 264.52(a), and 264.56(d); AAC 335-14-5-.04(3)(a) and 335-14-5-.04(7)(d)]

The provisions of this Contingency Plan will be carried out immediately by RSA-EDS site personnel whenever there is a fire, explosion, or release of hazardous waste or hazardous waste constituents that could threaten human health or the environment.

The RSA *Oil and Hazardous Substance Spill Prevention and Response Plan* as described in this Contingency Plan will be implemented when a fire, explosion, or release of chemical agent or hazardous waste/hazardous material occurs outside the engineering controls of the RSA-EDS site or when the incident cannot be managed using available RSA-EDS site supplies and resources.

Incidental releases or spills of chemical agent or hazardous waste that occur inside the engineering controls of the RSA-EDS site will be managed as a part of routine operations. Control procedures for responding to incidental spills and releases are described in **Section G-4e**.

1 (This page intentionally left blank.)

G-4 EMERGENCY RESPONSE PROCEDURES [40 CFR 264.56; AAC 335-14-5-.04(7)]

The emergency procedures presented in the following paragraphs are those to be followed by the RSA-EDS site personnel. Once notification of an emergency has been made that implements the RSA *Oil and Hazardous Substance Spill Prevention and Response Plan*, procedures presented in the RSA *Oil and Hazardous Substance Spill Prevention and Response Plan* will be followed.

G-4a Notification [40 CFR 264.56(a) and (d); AAC 335-14-5-.04(7)(a) and (d)]

When a chemical agent, hazardous waste/hazardous material accident/incident emergency occurs at the RSA-EDS site, the following procedures will be followed:

1. The discoverer of the incident will immediately notify the RCMD Site Manager of the incident by vocal command (for example, person to person, telephone, radio).

2. The RCMD Site Manager or designee will visually assess the incident and notify and provide input to the RSA Fire Department by dialing 911. The RSA Fire Department will immediately notify the RSA EMD.

3. RSA-EDS site personnel and visitors will be notified of an emergency by an audible alarm and/or vocal command. Individuals visiting the RSA-EDS site will be escorted by personnel who are familiar with site-specific emergency notification procedures.

4. Upon notification of an emergency, all EDS processing and support operations will continue until items being processed have been secured. Once the items are secured, EDS processing operations will cease.

5. The OSC and RCMD Site Manager or designee will evaluate the incident. The OSC will determine if local authorities should be contacted to request assistance or evacuate the local area. This procedure is in accordance with the RSA *Oil and Hazardous Substance Spill Prevention and Response Plan*. The OSC will also notify all appropriate local/state/federal agencies, as necessary, based on the extent of the incident.

G-4b Identification of Hazardous Materials [40 CFR 264.56(b); AAC 335-14-5-.04(7)(b)]

The emergency responders will identify the character, exact source, amount, and extent of any release of hazardous waste or materials. The exact source of a hazardous waste or material release is initially identified by the discoverer and later confirmed by the OSC.

Known chemical fills will be managed at the RSA-EDS site. Therefore, any release of an unknown material is not anticipated. However, if a released material cannot be readily identified, samples may be collected for analysis. In the event that material cannot be identified by analysis, a "worst-case" situation will be assumed and commensurate response procedures will be initiated.

G-4c Hazard Assessment [40 CFR 264.56(c) and 264.56(d); AAC 335-14-5-.04(7)(c) and 335-14-5-.04(7)(d)]

An assessment on possible hazards to human health and the environment will be conducted by the OSC according to the current RSA *Oil and Hazardous Substance Spill Prevention and Response Plan*. The assessment will consider both direct and indirect effects.

If a spill/release occurs at the RSA-EDS site, the RCMD Site Manager or designee will immediately assess all spills/releases to determine the following information: material(s) involved; exact source of release; quantity of release; release classification: (1) release to the environment (not wholly contained in the Environmental Enclosure) or (2) release contained, extent of any materials released to the environment, and extent of injuries.

The RCMD Site Manager or designee will then provide input to the OSC.

G-4d Notification Procedures [40 CFR 264.56(d); AAC 335-14-5-.04(7)(d)]

If the OSC or designee determines, based on the assessment, the incident could threaten human health or the environment outside RSA, he or she will notify the ADEM at the 24-hour call line 800-843-0699, or the National Response Center (NRC) 800-424-8802, and the appropriate local agencies. The OSC will provide the following:

- Name, title, and telephone number of the OSC

- Name and address of facility
- Time and type of incident (for example, release, fire)
- Names and quantity of material(s) involved, to the extent known (indicate if spill quantities have been exceeded)
- The extent of injuries, if any
- The possible hazards to human health or the environment, outside RSA.

If the assessment indicates that it may be advisable to evacuate local areas outside RSA, the RSA OSC will contact the Madison County officials and provide the information previously listed.

G-4e Control Procedures [40 CFR 264.52(a); AAC 335-14-5-.04(3)(a)]

The responses and control procedures described in this section will be initiated in the event of an incident involving chemical agent or hazardous waste/hazardous materials at the RSA-EDS site involving fire, explosion, spill, or vapor release of chemical agent or other hazardous materials that pose a possible threat to human health and the environment. Also included are procedures that will be followed in response to incidental spills or releases. In specific emergency situations, the OSC or designated representative may deviate from the procedures to bring the situation under control.

Incidents Involving Fire or Explosion

The RSA *Oil and Hazardous Substance Spill Prevention and Response Plan* will be implemented immediately if there is a fire or explosion that involves, or could spread to, hazardous waste management areas at the RSA-EDS site. If a larger area needs to be evacuated, procedures for evacuation in the RSA *Oil and Hazardous Substance Spill Prevention and Response Plan* will be implemented, and the installation will coordinate with local officials, as required.

The RCMD Site Manager for the RSA-EDS site or designee will immediately assess all fires/explosions to determine the following information: material(s) involved; exact source of release; quantity of release; release classification: (1) release to the environment (not wholly contained in the RSA-EDS site

Environmental Enclosure, supply storage area, or hazardous waste storage areas) or (2) release contained, extent of any materials released to the environment, and extent of injuries.

The RCMD Site Manager or designee will then provide input to the OSC.

Spills or Releases Outside Engineering Controls

In the event of a chemical agent spill or release outside engineering controls or that cannot be addressed using available RSA-EDS site supplies and resources, the RSA *Oil and Hazardous Substance Spill Prevention and Response Plan* will be activated.

For spills or releases of non-chemical agent hazardous wastes or materials outside engineering controls, the RSA *Oil and Hazardous Substance Spill Prevention and Response Plan* will be implemented.

If decontamination of terrain is required, decontamination measures will follow procedures specified in the current RSA *Oil and Hazardous Substance Spill Prevention and Response Plan*.

If the spill or release is a reportable spill[1] or a release above the reportable quantity, notify the RSA Fire Department (911). The OSC will evaluate the release and make additional notifications in accordance with the RSA *Oil and Hazardous Substance Spill Prevention and Response Plan*, as required.

Procedures to Respond to Incidental Spills and Releases

The following actions will be taken in the event of incidental spills or releases:

1. Wear appropriate protective clothing per the direction of SHO.

2. Contain the spill in the smallest area possible using absorbent socks, berms, or other means.

3. Repair or plug the leak, if possible.

[1] Reportable spills are those entering surface waters or wetlands or any spill over 25 gallons or any release above the reportable quantity (see 40 CFR 302.4). Mandatory notifications should be made within 30 minutes of discovery of the discharge.

4. Decontaminate the release area.

5. For container spills, the container must be repaired or removed from service immediately if leaking. Place container in overpack or remove container contents, if necessary, using a portable pump, and transfer material to a new container. If the material was released to secondary containment (for contents released from a container), released material will either be removed from the containment area using equipment such as a portable pump or absorbed using compatible absorbent materials such as pillows, socks, or granules.

6. Decontaminate equipment and clothing as directed by the RCMD Site Manager or designee as applicable.

7. Manage spent chemical agent decontamination solutions and other waste decontamination solutions as hazardous waste.

8. Place absorbed or pumped material into United Nations (UN) rated containers, label appropriately, and store in a less than 90-day hazardous waste storage area at the RSA-EDS site pending shipment to a permitted treatment, storage, and disposal facility (TSDF) for further management.

G-4f Prevention of Recurrence or Spread of Fire, Explosion, or Release [40 CFR 264.56(e) and (f); AAC 335-14-5-.04(7)(e) and (f)]

All operations near a hazardous waste spill, release, fire, or uncontrolled explosion site will be suspended by the RCMD Site Manager or designee for that particular site involved until cleared by the OSC as specified in the current RSA *Oil and Hazardous Substance Spill Prevention and Response Plan*.

Before entering an area after a fire or explosion has been extinguished, monitoring equipment (for example, gas detectors) will be used to detect additional hazards.

Prior to restarting RSA-EDS site operations, the RCMD Site Manager or designee and OSC will inspect process and structural equipment for leaks, cracks, and other potential problems. Released waste will be properly collected and containerized after personnel safety is assured and the released material has been identified. Containers of waste will be isolated from other waste and stored in a less than 90-day hazardous waste storage area pending shipment to a permitted TSDF for further management.

A review of the cause of a chemical agent or hazardous waste/hazardous material accident/incident, as specified in the current RSA *Oil and Hazardous Substance Spill Prevention and Response Plan*, will be conducted by the OSC and the RCMD Site Manager or designee. The operation that caused the accident/incident will not be restarted until adequate corrective and preventive measures have been determined and implemented. Any incident that necessitates implementing this Contingency Plan will be followed by a written report documenting review of the incident and the follow-up actions required. A written report is required for any incident where the Contingency Plan is implemented, including fires, explosions, and releases.

G-4g Storage and Treatment of Released Material [40 CFR 264.56(f) and 264.56(g); AAC 335-14-5-.04(7)(f) and 335-14-5-.04(7)(g)]

Spilled or contaminated materials produced by a hazardous waste accident or incident will be collected, characterized, and stored in a less than 90-day hazardous waste storage area pending shipment to a permitted TSDF.

G-4h Incompatible Waste [40 CFR 264.56(h)(1); AAC 335-14-5-.04(7)(h)1]

After proper identification, the RCMD Site Manager or OSC will ensure any waste that may be incompatible with the released material will not be treated, stored, or otherwise managed in the area in which the incident occurred until cleanup procedures are completed.

G-4i Post-Emergency Equipment Maintenance [40 CFR 264.56(h)(2) and 264.56(i); AAC 335-14-5-.04(7)(h)2 and 335-14-5-.04(7)(i)]

All emergency equipment used in responding to a spill, fire, explosion, or release will be decontaminated and repaired as necessary prior to reuse or will be replaced in accordance with the RSA *Oil and Hazardous Substance Spill Prevention and Response Plan*.

Before operations resume, all safety equipment will be inspected. Emergency equipment will also be cleaned, inspected, and maintained by the equipment user. State authorities will be notified that post-emergency equipment maintenance has been completed and that operations will be resumed.

When this Contingency Plan is invoked and decontamination and cleanup are completed in the affected areas of the RSA-EDS site, the OSC will notify ADEM and any local authorities (as applicable) that:

1. Cleanup of the affected areas has been completed so that RSA-EDS site operations may be resumed without risk of incompatible material coming into contact with spilled material.

2. All emergency equipment has been cleaned and readied for its intended use.

G-4j Container Spills and Leakage [40 CFR 264.52 and 264.171; AAC 335-14-5-.04(3) and 335-14-5-.09(2)]

The procedures to be used to contain spills or leakage, including the removal of leaked or spilled waste and the repair of containers, are discussed in **Section G-4e**, Control Procedures. Spill cleanup will occur within 24 hours after the incident.

G-4k Tank Spills and Leakage [40 CFR 264.194(c); AAC 335-14-5-.10(5)(c)]

The hazardous waste management units addressed in this permit modification application are not tanks; therefore, the requirements of this section are not applicable.

G-4l Surface Impoundment Spills and Leakage [40 CFR 264.227; AAC 335-14-5-.11(8)]

The hazardous waste management units addressed in this permit modification application are not surface impoundment units; therefore, the requirements of this section are not applicable.

1 (This page intentionally left blank.)

G-5 EMERGENCY EQUIPMENT [40 CFR 264.52(e); AAC 335-14-5-.04(3)(e)]

The following types of emergency equipment are maintained at RSA for emergency response and are listed in the RSA Contingency Plan:

- Fire protection equipment
- Spill control equipment
- Decontamination equipment.

Emergency equipment that will be maintained at the RSA-EDS site is provided in **Table G-5-1**.[1] In addition, the RSA-EDS site will contain communication systems and a Personnel Decontamination Station (PDS).

G-5a RSA-EDS Site Communication and Alarm Systems (Internal and External)

Internal communications of personnel between various trailers will consist of throat microphones, hand-held radios, headsets, and cell phones. Throat microphones and headset equipment will also be made available when personnel are required to use self-contained breathing apparatus (SCBA) equipment or supplied air, and the "two-man rule" will be invoked to ensure personnel safety when working on contaminated or "hot" equipment. Non-routine operating conditions, including detection of the release of chemical agent above the established alarm level will be conveyed to site personnel using this internal communication system.

Land lines and/or cell phones will be the primary external communication equipment that will be used to summon emergency assistance from RSA security, police, fire department, and/or emergency response teams. Hand-held radios and cell phones may also be used to summon external assistance in an emergency.

Monitoring will be conducted during chemical agent and industrial chemical operations. An alarm will sound in the monitoring room should target chemicals be detected above the established alarm levels. Information about the monitoring and associated equipment that will be in place is provided in **Attachment F-3** of this permit modification application.

---

[1] All tables are located at the end of this section.

G-5b Emergency Personnel Decontamination Station (PDS)

Decontamination Station consists of equipment for personnel and equipment decontamination purposes. When treating chemical agent fills, a 5 percent solution of sodium hypochlorite (NaOCl) will be used at each PDS for equipment along with a detergent and water solution for personnel; when treating industrial chemical fills, detergent and water will be used as the decontaminant for personnel and equipment.

Table G-5-1. RSA-EDS Site Emergency Equipment

Type of Spill Equipment	Capability
Spill Kit for Acids, Bases, and Strong Solvents	Spill Cleanup
Spill Kit for Oils, Coolants, Solvents, and Water	Spill Cleanup
Shovel, Plastic	Spill Cleanup
Broom	Spill Cleanup
Plastic Bags	Spill Cleanup
Coveralls	Spill Cleanup
Duct Tape	Spill Cleanup
Absorbent Material	Spill Cleanup
Dust Pan	Spill Cleanup
Drum, 55 gallon	Containment
Drum, 85-gallon overpack	Containment
Plastic, Sheet	Spill Cleanup
Wet Vacuum	Spill Cleanup
Drum Cart	Move Waste
Spill Pallets	Containment
Fire Extinguisher	Fire Protection
Eye Wash, Portable	Eye Decontamination
Bucket, 5 gallon w/Water	Skin Decontamination
Sponge	Skin Decontamination
Liquid Soap	Skin Decontamination
Emergency Response Guide Book	Safety Procedures
MSDS/SDS Sheets	Safety Procedures
Profile Sheets	Safety Procedures
Mobile Telephone	Notification
Air Horn	Notification

Notes:

Equipment listed in this table will be onsite and represents equipment associated with one EDS unit.

MSDS = Material Safety Data Sheet
SDS = Safety Data Sheet

1 (This page intentionally left blank.)

G-6 COORDINATION AGREEMENTS [40 CFR 264.37, 264.52(c), 264.53(b), and 265.37(b); AAC 335-14-5-.03(8), 335-14-5-.04(3)(c), 335-14-5-.04(4)(b), and 335-14-5-.03(8)(b)]

RSA maintains its own security police force and fire department that serve as the primary authorities for emergency response. The RSA Fire Department (including the IRT) serves as the emergency response team for all incidents involving industrial and/or chemical facilities. These personnel are highly trained to respond to all incidents that could be encountered at this installation.

Coordination agreements have been made with local agencies in the RSA region. Medical service agreements have been made between the U.S. Army Garrison – Redstone and Huntsville Hospital.

Ambulance services for RSA have been contracted to HEMSI. HEMSI is certified by the Commission on Accredited Ambulance Services in the State of Alabama.

A fire protection mutual aid agreement has been made between the U.S. Army Garrison – Redstone and the City of Huntsville (dated 14 July 2011) to assist in providing adequate fire protection for RSA in the event of an emergency.

Other emergency services have been coordinated through local and regional sources (including Huntsville-Madison County Emergency Management Agency, Madison County Commission, City of Huntsville, and City of Madison), in a Memorandum of Understanding, dated 20 October 2003. Signed copies are kept at RSA.

1 (This page intentionally left blank.)

G-7 EVACUATION PLAN [40 CFR 264.52(f); AAC 335-14-5-.04(3)(f)]

Personnel assigned to the RSA-EDS site will be instructed in evacuation signals, procedures, and routes from the RSA-EDS site.

Evacuation routes from the RSA-EDS site will be posted onsite. If a wider area needs to be evacuated or the installation needs to be evacuated, procedures for evacuation in the RSA *Oil and Hazardous Substance Spill Prevention and Response Plan* will be implemented, and the installation will coordinate with local officials, as required. The RSA Site Evacuation Map is provided in **Figure G-7-1**[1].

Evacuation of the RSA-EDS Site

Evacuation procedures are as follows:

1. Upon direction to evacuate, all personnel in the area will be notified of the evacuation by an audible alarm and/or vocal command.

2. If an incident occurs inside the Environmental Enclosure, non-essential personnel (as defined by the RCMD Site Manager or designee) will don protective masks and will proceed outside to an upwind assembly point to receive further instructions from the RCMD Site Manager or designee. All essential personnel will don protective masks [unless already in higher level personal protective equipment (PPE)] and will rally at the PDS to prepare to decontaminate the contaminated area. If the incident has occurred outside the Environmental Enclosure, the same procedure will be followed and all non-essential personnel will be evacuated from the assembly point to a safe distance upwind of the incident. Personnel will be accounted for at the assembly area. Windsocks located at the site will indicate wind direction.

3. The RCMD Site Manager or designee will identify the evacuation route from the RSA-EDS site as applicable, based on the type of incident and prevailing wind.

4. RSA-EDS site personnel will evacuate the area following the determined evacuation route.

[1] All figures are located at the end of this section.

5. The RCMD Site Manager or designee will contact the RSA Fire Department and will indicate the number of personnel requiring transportation from the assembly point as necessary.

6. If required, transportation will be provided for all personnel at the designated assembly point (the HEMSI ambulance crew is familiar with medical facilities and routes). Personnel who are injured or may have been exposed to non-hazardous chemicals or chemical agents will be decontaminated in the RSA-EDS site PDS, then taken to the Huntsville Hospital.

7. If a wider area needs to be evacuated or the installation needs to be evacuated, procedures for evacuation in the RSA *Oil and Hazardous Substance Spill Prevention and Response Plan* will be implemented, and the installation will coordinate with local officials, as required.

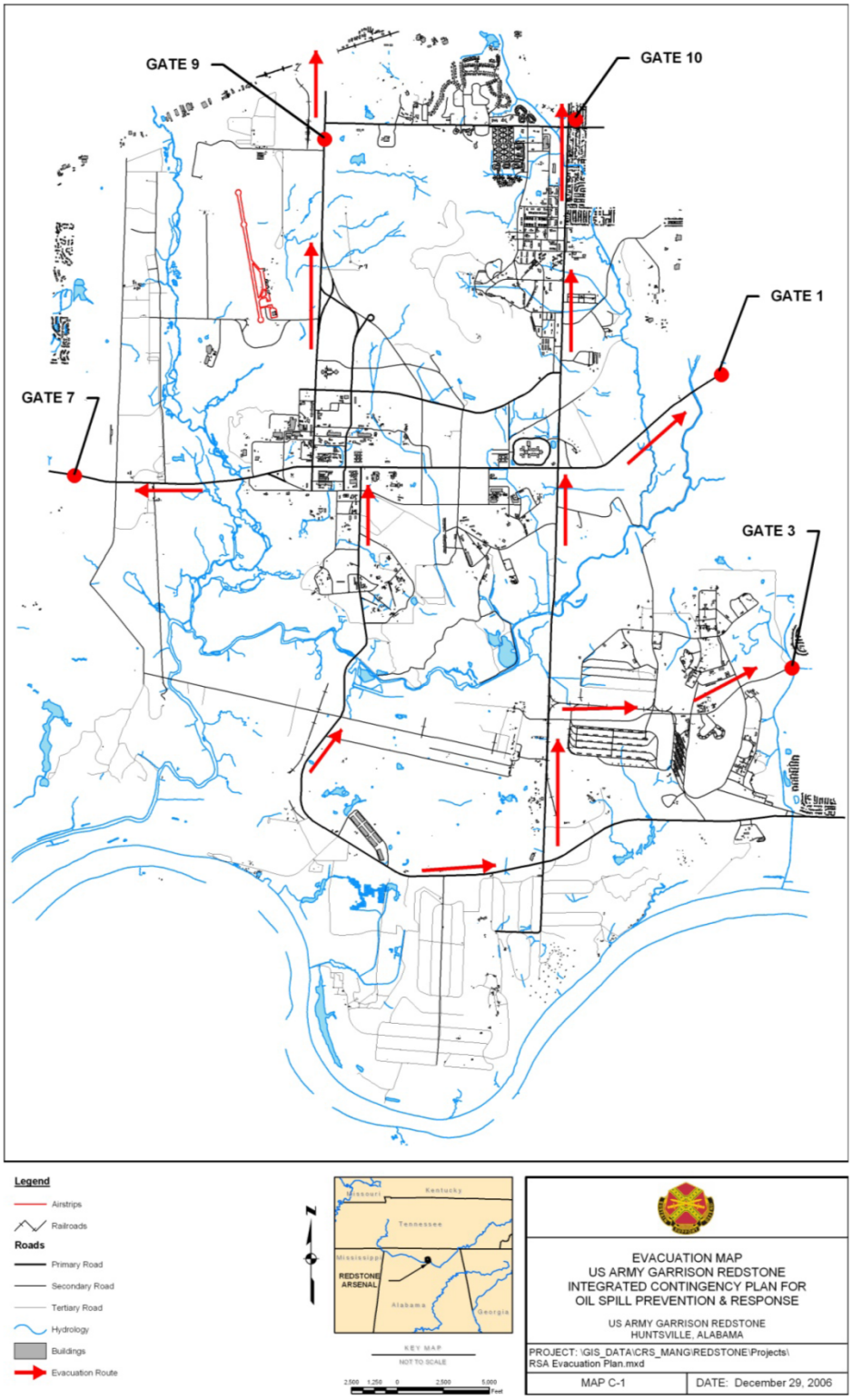

Figure G-7-1. RSA General Evacuation Map

1 (This page intentionally left blank.)

G-8 REQUIRED REPORTS [40 CFR 264.56(i); AAC 335-14-5-.04(7)(i)]

Any incident requiring implementation of the Contingency Plan will be noted in the operating record. ADEM will be notified that the following conditions have been met before resuming operations:

- The cleanup is complete and at no time during a response were wastes that were incompatible with the released materials treated, stored, or disposed of.

- All emergency equipment used to respond to this incident is cleaned and again fit for its intended use.

Within 15 days after an incident that requires implementation of this Contingency Plan, the incident will be reported to ADEM and will be noted in the operating record. ADEM Land Division, Hazardous Waste Program, will be sent a written report within 15 days as specified in the regulation that will include the following information:

1. Name, address, and telephone number of the owner or operator

2. Name, address, and telephone number and EPA Identification number of the facility

3. Date, time, and type of incident

4. Name and quantity of material(s) involved

5. The extent of injuries, if any

6. An assessment of actual or potential hazards to human health or the environment outside the facility, where applicable

7. Estimated quantity and disposition of recovered material that resulted from the incident.

1 (This page intentionally left blank.)

SECTION H
PERSONNEL TRAINING

[40 CFR 270.14(b)(12) and 264.16; AAC 335-14-8-.02(5)(b)12 and 335-14-5-.02(7)]

This hazardous waste training program will provide Redstone Arsenal Explosive Destruction System (RSA-EDS) site operating personnel with the necessary knowledge and skills to perform hazardous waste duties safely and efficiently, and will ensure that hazardous activities are conducted in an environmentally sound manner. The purpose of the training program is to prepare Explosive Destruction System (EDS) operating personnel for mission responsibility, with emphasis on reducing potential risks that may threaten human health or the environment. This will be accomplished by ensuring that personnel handling hazardous waste are thoroughly familiar with, and can properly perform, their assigned duties and responsibilities. In addition to providing training in the mechanics of the EDS operations, the training program will provide personnel with an understanding of the EDS operations, including safety, environmental, and emergency response operations.

This training description focuses on the training requirements and implementation for the EDS operators as these personnel are responsible for conducting operations and performing hands-on hazardous waste operations.

The Recovered Chemical Materiel Directorate (RCMD) will provide up to two EDS units at the RSA-EDS site and has programmatic control and authority of the operations to ensure treatment/destruction is conducted in a safe and environmentally acceptable manner. RCMD will provide a Site Manager who will be present onsite during EDS operations and will be responsible for the programmatic control and authority of the operations.

Operation of an EDS unit and daily hazardous waste management will be performed by Edgewood Chemical Biological Center (ECBC) personnel. ECBC will provide an Operations Manager who works in conjunction with the RCMD Site Manager, along with a Crew Chief; Site Safety and Health Officer; Environmental Officer; Quality Assurance Coordinator; and chemical, explosives, and maintenance operators.

EDS training meets the requirements of the Alabama Department of Environmental Management (ADEM) Administrative Code (AAC) 335-14-8-.02(5)(b)12 and 335-14-5-.02(7) by:

- Providing both initial and continuing training specific to the various hazardous waste management positions in relation to treating and storing hazardous wastes associated with permitted EDS site operations

- Ensuring that personnel complete their training program within 6 months of their assignment to the RSA-EDS site or to a new position associated with hazardous waste operations of the EDS operations

- Ensuring that personnel do not work unsupervised performing EDS treatment/destruction operations until they are certified under the *Explosive Destruction System Workforce Qualification and Certification Program*

- Ensuring the training program is directed by qualified personnel trained in hazardous waste management procedures

- Providing training that enables EDS personnel to respond effectively to emergencies

- Providing annual and periodic reviews of applicable training and ensuring EDS operating personnel participation

- Maintaining required training records and documentation

- Ensuring personnel do not engage in waste management operations until they have completed the requisite health and safety training [Occupational Safety and Health Administration (OSHA) 29 CFR 1910.120].

The training program provides both initial and continuing training relevant to an employee's position and applies to personnel who manage hazardous waste, including but not limited to, personnel who handle, move, perform maintenance on, and operate hazardous waste management equipment or supervise those who do. Per AAC 335-14-5-.02(7)(c), annual training requirements must be completed within 13 months of previous annual or initial training.

Section H-1 describes training program requirements specific to personnel. **Section H-2** describes implementation of the training program.

1 (This page intentionally left blank.)

H-1 OUTLINE OF TRAINING PROGRAM [40 CFR 270.14(b)(12) and 264.16; AAC 335-14-8-.02(5)(b)12 and 335-14-5-.02(7)]

Training consists of both introductory and continuing training for supervisors, operators, maintenance personnel, and other personnel involved in RSA-EDS site waste management operations. Introductory training will include classroom and hands-on training consisting of process demonstrations, equipment operation, and hands-on experience with hazardous waste procedures and instruction in emergency response. Continuing training will include safety briefings, procedure reviews, and annual refresher courses (for example, 8-hour annual refresher for hazardous waste operations training). Training for RSA-EDS personnel will incorporate training required by the Resource Conservation and Recovery Act (RCRA), OSHA, and U.S. Army (for chemical agent topics).

RSA-EDS personnel will receive training on the following topics commensurate with their job duties and responsibilities:

- Hazardous Waste Operations and Emergency Response (HAZWOPER) (per 29 CFR 1910.120)
- Communications and equipment alarms
- Hazard communication (per 29 CFR 1910.1200)
- Hazardous waste management procedures, including use, inspection, repair, and replacement of emergency and monitoring equipment; container management; labeling and weekly inspections; waste sampling and waste determinations; management of solid and liquid wastes; recordkeeping requirements and spill reporting for releases
- Contingency plans and emergency response procedures
- Protective clothing and equipment
- Shutdown operations (normal and emergency)

- Response to groundwater contamination

- Medical surveillance.

Operating personnel will already be trained in cardiopulmonary resuscitation (CPR)/automated external defibrillator (AED)/first aid. Also, key parameters for automatic waste feed cutoff systems are not an applicable topic as the EDS unit does not have any automatic waste feed mechanisms.

H-1a Job Titles and Duties [40 CFR 270.14(b)(12) and 264.16(d)(1) and (d)(2); AAC 335-14-8-.02(5)(b)12 and 335-14-5-.02(7)(d)1 and 2]

Job titles and duty descriptions of RSA-EDS site personnel are provided in **Attachment H-1**.

H-1b Training Content, Frequency, and Techniques [40 CFR 270.14(b)(12), 264.16(a)(3) and 264.16(b), (c), and (d)(3); AAC 335-14-8-.02(5)(b)12, 335-14-5-.02(7)(a)3, and 335-14-5-.02(7)(b), (c), and (d)3]

H-1b(1) EDS Operators

A qualification certification program has been established by the U.S. Army for the EDS operators, titled *Explosive Destruction System Workforce Qualification and Certification Program*. ECBC personnel will be responsible for operating the EDS units and conducting and performing hazardous waste operations at the RSA-EDS site.

Introductory training will be conducted using a variety of training techniques, including classroom instruction, demonstrations, drills, and hands-on exercises. A proficiency demonstration (for example, written test, hands-on demonstration, etc.) is required to verify trainee comprehension of the subject material.

Supervised hands-on training may take place at the RSA-EDS site. Evaluations will be administered by the supervisor or designated representative and performance checklists will be used to verify competence on the subject task.

Continuing training will supplement initial training and will be used to demonstrate continued proficiency in their assigned job areas. Continuing training will include required annual refresher training (for

example, 8-hour annual HAZWOPER training), as well as review of initial training topics as necessary and will also consist of a combination of classroom instruction, drills, and evaluated hands-on training. Operators must also score a minimum of 80 percent on a written exam, which is reported to the RCMD.

The EDS operator training program will be reviewed and updated by RCMD whenever there are changes in regulations, waste types handled or managed, design or operation, waste management equipment or techniques, or Contingency Plan procedures to maintain compliance with permit and regulatory requirements. The training program also may be updated at the request of the operator.

H-1b(2) RSA-EDS Site Visitors, Inspectors, and Non-routine Workers

During RSA-EDS site operations, certain personnel may be present who will not actively or routinely engage in hazardous waste treatment or handling operations. These personnel may be visitors, such as regulatory agency inspectors; Chemical Weapons Convention (CWC) inspectors/observers; independent contractor data collectors/observers/inspectors; and non-routine workers such as electricians and engineers to repair equipment or perform structure repairs. These types of personnel will, at a minimum, receive the General Site Orientation Briefing. In addition, these personnel may also attend a daily safety briefing as applicable and other training on the EDS operations, depending on the level of participation or work activity to be conducted.

H-1c Training Coordinator/Manager [40 CFR 270.14(b)(12) and 264.16(a)(2); AAC 335-14-8-.02(5)(b)12 and 335-14-5-.02(7)(a)2]

Each organization (government and contractor) that will be working at the RSA-EDS site is responsible for training their employees or ensuring that the employee receives required training for work at the RSA-EDS site commensurate with the employee's responsibilities and duties.

RCMD has oversight and training responsibility for the *Explosive Destruction System Workforce Qualification and Certification Program* and works in coordination with the ECBC Training Manager regarding EDS unit training.

The ECBC Training Manager is responsible for ECBC training, records, certifications, and updates, and ensures that personnel are properly trained in operating the EDS units in accordance with federal, State, Army, and local environmental regulations and permit/permit requirements.

RCMD also has oversight and training responsibility to ensure that all RSA-EDS site employees are trained in the RSA-EDS site hazardous waste permit, emergency response, and contingency plan actions commensurate with employee responsibilities and duties.

The responsibilities of RCMD are:

- Ensure that personnel are properly trained in the safe operation of the EDS unit in accordance with Federal, State, Army, and local environmental regulations, including the RSA Alabama Hazardous Wastes Management and Minimization Act Hazardous Waste Permit, EDS Modification.

- Coordinate continuing training as necessary to inform RSA-EDS site personnel of new procedures, provide refresher training, and provide training for new personnel.

- Identify and review vendors and other training resources to meet training requirements.

- Ensure training records are maintained in accordance with AAC 335-14-5-.02(7)(d).

- Ensure that EDS site personnel are trained in hazardous waste management and Contingency Plan implementation, including emergency procedures.

- Ensure that EDS site personnel receive training appropriate to their positions.

Training Staff

All instructors will be knowledgeable in the areas in which they will be teaching. Subject matter experts (SMEs) will be used as they possess the knowledge, training, and experience in a subject content area. For example, munition handling and safety personnel are part of training material development as well as part of actual training, as applicable.

H-1d Relevance of Training to Job Position [40 CFR 270.14(b)(12) and 264.16(a)(2) and (d)(3); AAC 335-14-8-.02(5)(b)12 and 335-14-5-.02(7)(a)2 and (d)3]

All personnel will be trained in the duties and responsibilities relevant to their job position as it relates to hazardous waste operations. Course requirements have been tailored to the subject areas and levels of

detail appropriate for each position. Training (initial and continuing) relevant to each RSA-EDS site job position is presented in **Tables H-1-1**[1] and **H-1-2**.

H-1e Training for Emergency Response [40 CFR 270.14(b)(12) and 264.16(a)(3); AAC 335-14-8-.02(5)(b)12 and 335-14-5-.02(7)(a)3]

Emergency response training will be provided to all RSA-EDS site personnel relevant to their positions. At a minimum, the training has been designed to ensure that site personnel are able to respond effectively to emergencies by becoming familiar with site emergency procedures, equipment, and systems including:

- Procedures for locating, using, inspecting, repairing, and replacing site emergency and monitoring equipment
- Location and use of communication and equipment alarms
- Response to emergency situations (e.g., fires, explosions, releases)
- Who to inform in the event of an emergency
- Response to groundwater contamination incidents
- Shutdown of operations and evacuation.

Course descriptions are provided in **Attachment H-2**, Course Descriptions.

[1] All tables are located at the end of this section.

Table H-1-1. RSA-EDS Personnel Introductory Training Requirements

Job Title	Training Courses				
	General Site Orientation Briefing	Safety, Health, and Environmental Training	EDS Operating System Course	EDS Maintenance Course	EDS System Manager's Training
RCMD Site Manager[a]	X	X			X
ECBC Operations Manager[a]	X	X			X
ECBC Crew Chief	X	X	X		
ECBC Site Safety and Health Officer	X	X			
ECBC Environmental Officer[a]	X	X			
ECBC Quality Assurance Coordinator[a]	X	X			
ECBC Chemical Operator	X	X	X		
ECBC Explosives Operator	X	X	X		
ECBC Maintenance Operator	X	X		X	
Visitors and Non-routine Workers[b]	X				

Notes:

[a] Must take 8-hour HAZWOPER Supervisor Training.

[b] Visitors include regulatory agency personnel and other personnel. Non-routine workers will already hold a certificate in the required OSHA HAZWOPER training for RCRA treatment, storage, and disposal facilities (TSDFs).

ECBC = Edgewood Chemical Biological Center
EDS = Explosive Destruction System
RCMD = Recovered Chemical Materiel Directorate

Table H-1-2. RSA-EDS Personnel Minimum Continuing Training Requirements

Job Title	Training Courses		
	General Site Orientation Briefing	Safety, Health, and Environmental Training	Specific Refresher Training
RCMD Site Manager	X	X	X
ECBC Operations Manager	X	X	X
ECBC Crew Chief	X	X	X
ECBC Site Safety and Health Officer	X	X	X
ECBC Environmental Officer	X	X	X
ECBC Quality Assurance Coordinator	X	X	X
ECBC Chemical Operator	X	X	X
ECBC Explosives Operator	X	X	X
ECBC Maintenance Operator	X	X	X

Notes:

ECBC = Edgewood Chemical Biological Center
RCMD = Recovered Chemical Materiel Directorate

(This page intentionally left blank.)

H-2 TRAINING IMPLEMENTATION [40 CFR 270.14(b)(12) and 264.16(b), (d)(4), and (e); AAC 335-14-8-.02(5)(b)12, 335-14-5-.02(7)(d)4, 335-14-5-.02(7)(e), and 335-14-5-.02(7)(b)]

RSA-EDS site personnel will be required to complete training specific to their job position within 6 months of assignment at the respective site or to a new assignment at the respective site and will not work unsupervised until all relevant training has been successfully completed and documented. Furthermore, site personnel must complete the requisite classroom and on-the-job training prior to engaging in any hazardous waste operations. For EDS operators, this includes the *Explosive Destruction System Workforce Qualification and Certification Program*.

All training will be based on analyses that identify the specific tasks to be performed by each job position as well as identify the knowledge, skills, and attitudes required to perform those tasks. Each training course will have learning objectives based on analysis of the tasks required to operate the EDS. Special emphasis will be placed on personnel safety and environmental compliance in every training module. Training aids, such as handouts, reference materials, models, or actual pieces of equipment, will be used as appropriate. Specialized vendor or commercially provided training may be required in some areas.

Written test and/or practical demonstration of skills (includes hands-on) will be administered during all courses to test the students' mastery of learning objectives to established job performance standards. Certificates of completion will be issued to all students who demonstrate proficiency of the course materials. At this point, the student will be considered qualified and may work under supervision. Individual employee training will be documented after completion of each course.

Hands-on training of the EDS will be administered to test student's mastery of operations while being observed by a supervisor. When the supervisor has determined that the student has met all training requirements, the certifying official will certify the student, who will then be able to perform EDS operations (as applicable) unsupervised. The certification will be placed in the student's training record, verifying that the student can work unsupervised.

Courses specific to the EDS will provide a thorough background in basic design, proper operation, and maintenance of the systems. General course descriptions are contained in **Attachment H-2**.

Training Records

Training records for the RSA-EDS site personnel involved in hazardous waste management operations and activities will be organized, updated, and maintained onsite by the respective organizations; readily available; and include, at a minimum:

- Job title for each position that is related to RSA-EDS site's hazardous waste management operations and activities, and the name of each employee filling the position
- Job description specifying duties for each position, minimum qualification required to fill the position, and required training for the position
- Description of the type and amount of introductory and continuing training that will be given to each employee
- Date each employee started working at the RSA-EDS site and termination date
- Course enrollment, training dates, attendance, and successful completion information, including certifications
- Copies of course materials and instructional methods (outlines, schedules, instructional techniques, and materials).

All training records and documentation on current RSA-EDS site personnel will be kept until closure of the RSA-EDS site. Training records on former RSA-EDS site personnel will be kept for at least 3 years from the date last worked at the respective site.

ATTACHMENT H-1

RSA-EDS JOB TITLES AND DESCRIPTIONS

(This page intentionally left blank.)

ATTACHMENT H-1
RSA-EDS JOB TITLES AND DESCRIPTIONS

With the exception of the RCMD Site Manager, job titles and descriptions presented below pertain to ECBC personnel who will operate the EDS units at the RSA-EDS site.

RCMD Site Manager: Responsible for the programmatic control and authority of EDS operations; works in conjunction with the ECBC Operations Manager; acts as interface with Redstone Arsenal (RSA), Materiel Assessment Review Board (MARB), Treaty, and RCMD management for RSA-EDS operations.

Minimum Qualifications/Experience: Bachelor's degree in related field, minimum of 2 years planning, operating, or overseeing chemical agent or hazardous waste operations. Must have experience managing multi-disciplinary teams including engineers, scientists, safety professionals, environmental professionals, public affairs, and resource management.

ECBC Operations Manager: Responsible for executing and directing all RSA-EDS site operations; responsible for overall site safety and environmental compliance; first line management/supervision; responsible for supply orders and maintenance issues; overall site logistics; may substitute for Site Safety and Health Officer, Environmental Officer, or Quality Assurance Coordinator.

Minimum Qualifications/Experience: 3 years experience managing operational personnel or 3 years experience with chemical handling operations.

ECBC Crew Chief: Responsible for day-to-day operation of an EDS unit; responsible for overall use of an EDS crew and shared use of the Personnel Decontamination Station (PDS) crew; responsible for coordinating with other EDS crews to ensure synergistic operations; responsible for safety, environmental compliance, and quality assurance for specific EDS unit; reviews and certifies limiting conditions of operation status; has maintenance responsibility for EDS unit; and provides data to ECBC Operations Manager on logistics for each EDS unit.

Minimum Qualifications/Experience: High School diploma or GED; 3 years experience managing operational personnel; 3 years experience with chemical handling operations.

ECBC Site Safety and Health Officer: Responsible for overall RSA-EDS site safety and health concerns; reviews limiting conditions of operations, checklists for accuracy, and monitors heat and cold stress. Is point of contact for accident and chemical agent reports; reports to the ECBC Operations Manager.

Minimum Qualifications/Experience: Bachelor's degree in related field and/or minimum 2 years experience managing safety and occupational health programs; experience with OSHA safety compliance federal and state requirements.

ECBC Environmental Officer: Responsible for RSA-EDS site compliance to environmental permits; responsible for hazardous waste documentation and labeling; reports to ECBC Operations Manager.

Minimum Qualifications/Experience: Bachelor's degree in the Sciences or Engineering and/or 3 years of experience with hazardous material handling under Federal and State laws; RCRA hazardous waste training required.

ECBC Quality Assurance Coordinator: Responsible for verifying compliance with the quality assurance plan and site-specific monitoring plan; reviews and certifies data prior to submitting data to Data Management System (DMS)/INACCMO; monitors site to ensure proper procedures are followed prior to operation; assists in review of near real-time (NRT) CHROM-NET™ data; reports to ECBC Operations Manager.

Minimum Qualifications/Experience: High School diploma or GED; 3 years of experience with quality assurance and quality control programs.

ECBC Chemical Operator: Responsible for chemical warfare materiel (CWM) chemical treatment activities and processes and for hazardous waste handling. Cross-trained to multiple job capabilities.

Minimum Qualifications/Experience: High School diploma or GED; experience with chemical handling and operations.

ECBC Explosives Operator: Responsible for explosives operations, including CWM initial unpack and explosives handling and preparation. Assists in hazardous waste handling. Cross-trained to multiple job capabilities.

Minimum Qualifications/Experience: High School diploma or GED; successful completion of the Defense Ammunition Center Courses AMMO-45 and AMMO-61; trained in the safe handling, placement, and operation of explosives, explosive components, and firing system for the RCMD system to be operated.

ECBC Maintenance Operator: Responsible for maintenance activities and processes for EDS units. Also, conducts preventive maintenance measures on the EDS units.

Minimum Qualifications/Experience: High School diploma or GED; experience with maintenance activities and processes.

(This page intentionally left blank.)

ATTACHMENT H-2
COURSE DESCRIPTIONS

(This page intentionally left blank.)

ATTACHMENT H-2
COURSE DESCRIPTIONS

Training courses will provide the most efficient and effective means of accomplishing training for a wide range of job descriptions at the RSA-EDS site. A description of each briefing, training, or course follows.

General Site Orientation Briefing

This briefing describes general site operations and covers the following topics: hazard communications (HAZCOM), general security, use of personal protective equipment (PPE), and emergency response, alarms, and evacuation.

Safety, Health, and Environmental Training

This training is provided by various sources/vendors and provides information on the following topics:

- Toxic Aid
- Site decontamination and other contingency measures
- RCRA/Comprehensive Environmental Response, Compensation, and Liability Act (CERCLA) requirements, permits, documents, recordkeeping, waste management, etc.
- CWM handling
- Hazardous waste handling (includes regulations and site-specific requirements, as applicable)
- PPE
- 40-hour HAZWOPER training
- 8-hour HAZWOPER supervisor training

- 8-hour annual HAZWOPER refresher training
- Medical surveillance and requirements
- Hazardous materials transportation [requirements under Department of Transportation (DOT)].

Not all topics listed will be applicable to all positions.

EDS Operating System Course

This course provides an overview of the EDS operations and addresses the components and operation of the EDS system including: trailer, electrical systems, treatment vessel, hydraulic system, helium leak detection, waste transfer system, and reagent supply system. This course covers the use and application of Standing Operating Procedures (SOPs) that will be used to operate the EDS and addresses routine operational procedures as well as procedures for unusual events. Explosives operators receive additional training on EDS explosives operations, CWM initial unpack, explosive charge placement, and fire set operation.

EDS Maintenance Course

This course presents a maintenance overview and provides specific training on maintenance of the EDS systems, as well as preventive maintenance measures.

EDS-Specific Refresher Training

This course provides system-specific operating system and maintenance refresher training on an annual basis and will be divided into three modules: operating systems, system maintenance, and explosive operators' training. The specific modules completed will depend on the student's job description and work experience.

EDS System Manager's Training

This course familiarizes students with the EDS components, subsystems, operating parameters, and site operations; also includes RSA-EDS Command Post operations, responsibilities, and regulatory and documentation requirements.

(This page intentionally left blank.)

SECTION I-1
CLOSURE PLAN

[40 CFR 270.14(b)(13) and 264.112; AAC 335-14-8-.02(5)(b)13 and 335-14-5-.07(3)]

I-1a Introduction

This Closure Plan describes the strategy to perform temporary closeout and Resource Conservation and Recovery Act (RCRA) closure of the Explosive Destruction System (EDS) unit(s) that will be located at the Redstone Arsenal Explosive Destruction System (RSA-EDS) site. This plan also presents methods to identify contaminated equipment; decontaminate contaminated equipment; dispose of all wastes and contaminated materials; perform verification sampling to confirm successful decontamination; and certify RCRA closure of an EDS unit. The Environmental Enclosure used to house an EDS will be decontaminated (if necessary) in accordance with relevant procedures, then may be reused to support other projects located elsewhere at other U.S. Department of Defense (DoD) facilities. This enclosure may also be discarded if repairs or relocation are not cost effective.

I-1b General Description

Based on schedule and availability, up to two EDS Phase 2 units may be located at the RSA-EDS site. **Figure I-1-1**[1] presents an example of the RSA-EDS site layout. Each EDS unit will be operated in an Environmental Enclosure as shown in **Figure I-1-2**.

The EDS units will use explosive charges to access recovered munitions and other items and treat chemical fill, explosive residues, and contaminated solids (metal parts and fragments) with chemical reagent.

I-1c Closure Strategy

This section describes the process for performing a temporary closeout and a RCRA closure.

[1] All figures are located at the end of this section.

I-1c(1) Temporary Closeout

The EDS is a container-like transportable system that can be used at Redstone Arsenal (RSA) or offsite at other locations. As such, there may be periods when no EDS may be present at RSA; however, this absence does not mean that closure is imminent. Between periods of operation, the EDS units will undergo a "temporary closeout." The temporary closeout will follow established EDS Standing Operating Procedures that ensure removal of any residual chemicals from a unit and that an EDS unit can be demobilized for reuse. All support structures and utilities will remain at the RSA-EDS site but will be placed in standby mode. Each temporary closeout process will be documented; and the Alabama Department of Environmental Management (ADEM) Director will be notified when an EDS unit undergoes a temporary closeout.

I-1c(2) RCRA Closure

The EDS will undergo RCRA closure when EDS operations will no longer be needed at RSA. The ADEM Director will be notified when the EDS units are slated for RCRA closure. Decontamination (as necessary) will be conducted according to the Project Manager for Non-Stockpile Chemical Materiel Policy (October 2010) pertaining to chemical agent decontamination of tools, supplies, equipment, and facilities. This policy establishes standards and procedures for identifying and decontaminating equipment on completing a chemical agent destruction mission and is based on Department of the Army Pamphlet (DA Pam) 385-61 (2012) and the DoD 60055.9-STD (current version) regarding chemical agents.

The Environmental Enclosures will be decontaminated (if necessary), then may be reused to support projects located elsewhere at other DoD facilities or may be discarded if repairs or relocation are not cost effective.

I-1c(3) Closeout and Closure Activities

Personnel involved in RSA-EDS closeout and closure activities will be trained in applicable health and safety procedures, use of decontamination and sampling equipment, proper decontamination techniques, and sample collection, handling, and management.

Wastes generated during temporary closeout and RCRA closure activities will be properly characterized as outlined in the Waste Analysis Plan described in **Section C-2** of this permit modification application

and will be containerized and managed in a less than 90-day hazardous waste storage area, pending shipment to a permitted treatment, storage, and disposal facility (TSDF). The types of wastes expected to be generated from temporary closeout and RCRA closure activities include decontamination solutions; rinsewaters; used personal protective equipment (PPE); wipes; rags; and other absorbent and cleaning materials used in decontamination or cleaning activities.

Once the EDS units are deemed clean to acceptable levels, the units can be demobilized for reuse. Demobilization of the EDS units will involve removing the EDS trailer-mounted equipment from the Environmental Enclosures. At RCRA closure, the Environmental Enclosures will be dismantled for use at another location. If during demobilization, process areas or equipment (for example, piping, tubing, cracks, and crevices) are discovered that may be contaminated, these areas or equipment will be decontaminated and decontamination verified. When chemical agent fills have been processed, headspace monitoring and rinsewater sampling will be conducted and results will be compared to the acceptable levels listed in **Table I-1-1**.[2] When arsenic-containing chemical fills have been processed, arsenic rinsewater sampling and analysis will be conducted and results compared to the acceptable level listed in **Table I-1-1**. If results do not meet these acceptable levels, then decontamination will be repeated until the levels are met.

The Air Filtration System (AFS) will remain operating and chemical agent monitoring conducted until headspace monitoring results are received and results show that the acceptable levels for reuse are met. During a closeout, the Environmental Enclosure AFS carbon filters will be turned off, and if necessary, the first carbon filter bank will be removed and managed as hazardous waste.

For the industrial chemical fills, there are no required acceptable level values, as these are not chemical agents. However, the industrial chemical fills phosgene (CG), carbon tetrachloride + chloroacetophenone + benzene (CNB), chloroacetophenone + chloropicrin + chloroform (CNS), diphenylchloroarsine (DA), phenyldichloroarsine (PD), titanium tetrachloride (FM smoke), and sulfur trioxide + chlorosulfonic acid (FS smoke) are characteristic wastes. Any residues will be deactivated and removed during the cleaning/decontamination (e.g., soap and water mixture) activity.

I-1d Closure Performance Standard [40 CFR 264.111; AAC 335-14-5-.07(2)]

Per ADEM Administrative Code 335-14-5-.07, Closure and Post-Closure (that incorporates by reference 40 CFR 264.111), an owner or operator must close a permitted hazardous waste management unit in a

[2] All tables are located at the end of this section.

manner that minimizes the need for further maintenance and controls, minimizes, or eliminates to the extent necessary to protect human health and the environment, post-closure escape of hazardous waste, hazardous constituents, leachate, contaminated runoff, or hazardous waste decomposition products to the groundwater, surface waters, or the atmosphere.

The EDS treatment operations and waste management will be performed in a manner designed to control and eliminate escape of hazardous waste and hazardous constituents into the environment.

The EDS units include the trailer that holds the Containment Vessel, waste handling subsystems, and associated equipment for each unit. **Section D-1** of this permit modification application provides a detailed description of the EDS design and operation. EDS operations will take place inside an Environmental Enclosure comprised of a ceiling, sides, and impermeable flooring that will protect the hazardous waste management unit from precipitation and run-on as well as prevent the creation of any contaminated runoff.

Engineering and administrative controls will be in place, such as the EDS trailer secondary containment pan that is capable of containing the contents of a full Containment Vessel; secondary containment for liquid waste containers and chemical reagents; an enclosure AFS with carbon filtration; use of trained explosive handling and chemical operators; approved work procedures; use of appropriate PPE; and prohibition of open flames, cutting, welding, smoking, and radiant heat inside the Environmental Enclosure all contribute to controlling, minimizing, or eliminating the possibility of contamination to groundwater, surface waters, or the atmosphere from EDS operations.

Finally, at the conclusion of every EDS treatment operation, closeout procedures are followed for servicing, cleaning, disassembly, and decontaminating (if necessary) EDS components to acceptable levels so that the EDS may be reused for subsequent or future operations at the same location or mobilized to a new location.

These procedures involve the following:

- Cleaning/decontaminating the Containment Vessel and Containment Vessel door

- Disassembling components of the Containment Vessel and Containment Vessel door, decontaminating components (O-ring, Grayloc® seal, protector plate, blast shield, and covers, etc.), and manually cleaning/decontaminating the components

- Scrubbing the interior of the Containment Vessel
- Following all cleaning/decontamination with clean water rinses
- Clearing sample and drain lines on the Containment Vessel door
- Cleaning EDS trailer contact surfaces (electrical panels, debris pan, spill containment trays, railings, and other operator-contacted surfaces)
- Cleaning the EDS trailer secondary containment pan and platform secondary containment pan
- Collecting all cleaning solutions and rinsewaters and managing them appropriately, based on sampling and analysis results according to the Waste Analysis Plan
- Collecting components/parts that are not reused (e.g., O-ring, Grayloc seal) and placing the items in waste containers for disposal
- Performing headspace monitoring and/or other means (such as rinsate sampling) when chemical agent has been processed to confirm cleaning/decontamination to acceptable levels for equipment reuse
- Reassembling EDS components, such as the Containment Vessel door, and securing the EDS and associated equipment for demobilization.

Prior to initiating temporary closeout or RCRA closure of the EDS, procedures dealing with servicing, cleaning, and preparing the EDS equipment for departure will have been conducted; and headspace monitoring and/or rinsate results (as applicable) recorded; reagent supply containers and reagent transfer pumps disconnected; all EDS process and cleaning wastes will have been collected, containerized, and removed from the Environmental Enclosure. Completion of these procedures is then followed by site breakdown.

All wastes to be treated and those wastes generated from the EDS treatment operations will have been removed from the site. On completing a temporary closeout or RCRA closure activities, there will be no hazardous waste residues remaining on EDS associated equipment or in the Environmental Enclosures.

Based on the general EDS operating information provided previously, the EDS units will be deemed RCRA closed when EDS operations will no longer occur at RSA and the qualified, Alabama-licensed Professional Engineer has reviewed the EDS operating records to:

- Confirm and evaluate any spills, releases, and cleanup activities
- Confirm that the EDS procedures for closeout (servicing, cleaning/decontaminating, and preparing the EDS and associated equipment for subsequent use or demobilization) were followed
- Confirm the EDS units were monitored (via headspace monitoring and/or other means such as rinsate sampling) to verify adequacy of cleaning/decontamination (if decontamination conducted)
- Confirm monitoring results were documented and that values met the required levels established for equipment reuse (See **Table I-1-1**)
- Confirm that wastes generated from EDS closeout and closure activities were transferred to a less than 90-day hazardous waste storage area pending shipment to an approved TSDF, or were shipped directly to a TSDF.

No Professional Engineer certification will be necessary for temporary closeout as the EDS will continue a planned operation.

Figure I-1-3 depicts the general decision process for clean closure. For chemical agent processing, headspace monitoring and rinsewater sampling results must meet the acceptable levels identified in **Table I-1-1**. Headspace monitoring will be conducted in accordance with ECBC's laboratory and monitoring procedures. **Table I-1-2** specifies the methods that may be used for headspace monitoring.

For the industrial chemical fills, there are no required acceptable level values, as these are not chemical agents. However, the industrial chemical fills CG, CNB, CNS, DA, PD, FM smoke, and FS smoke are characteristic wastes. Any residues will be deactivated and removed during the cleaning/decontamination (e.g., soap and water mixture) activity.

Acceptable levels for headspace monitoring of chemical agents are based on headspace vapor sampling and analysis and are established as the vapor screening level (VSL), which is a vapor concentration term that is independent of time. The term is used to define a level of item cleanliness (DA Pam 385-61, Chapter 5).

Headspace sampling will consist of using MINICAMS® units or collection and analysis of Depot Area Air Monitoring System (DAAMS) tubes for chemical agent. Confirmational sampling for chemical agent may be performed using DAAMS.

Rinsewaters (including any waste waters generated during steam cleaning, if steam cleaning is used for decontamination) will be sampled and analyzed for chemical agent. **Table I-1-3** summarizes the sampling and analysis methods that will be used to identify contamination and confirm satisfactory decontamination. Decontamination for chemical agent will be performed until headspace monitoring and rinsewater analytical results meet the acceptable levels in **Table I-1-1**.

During temporary closeout and RCRA closure activities, personnel will use appropriate personal protective clothing and equipment as determined by the site-specific Health and Safety Plan. In general, DA Pam 385-61, *Toxic Chemical Agent Safety Standards*, will be followed, as well as Occupational Safety and Health Administration (OSHA) safety standards.

I-1e Partial Closure and Final Closure Activities [40 CFR 264.112 and 264.114; AAC 335-14-5-.07(3) and 335-14-5-.07(5)]

The closure strategy described in this Closure Plan is a final closure activity for the EDS units at RSA. However, a partial closure of an EDS unit may take place and will be conducted in the same manner as previously described. Note however, that a temporary closeout is not a partial closure as the EDS will continue a planned operation. Treatment of recovered items in the EDS units is expected to continue until one or more of the following occur:

- EDS treatment is no longer needed
- The EDS is replaced with an alternative technology
- The EDS program ends.

I-1f Maximum Waste Inventory [40 CFR 264.112(b)(3); AAC 335-14-5-.07(3)(b)3]

The estimated maximum inventory of wastes that may be present at the RSA-EDS site at any time during operations is provided in **Table I-1-4**.

I-1g Disposal or Decontamination of Equipment, Structures, and Soils [40 CFR 264.112(b)(4) and 264.114; AAC 335-14-5-.07(3)(b)4 and 335-14-5-.07(5)]

Hazardous wastes generated during temporary closeout and RCRA closure will be containerized, characterized, and transported to a permitted TSDF. If contaminated, the EDS or associated equipment used during operations will be decontaminated for reuse following normal operation procedures. If any hazardous waste management unit and associated equipment or the Environmental Enclosures cannot be decontaminated to an adequate level to allow reuse, it will be managed as a hazardous waste.

Based on the Project Manager for Non-Stockpile Chemical Materiel Policy for Chemical Agent Decontamination of Tools, Supplies, Equipment, and Facilities (2010)[3] when determining potential contamination and path forward for equipment reuse and/or ultimate disposition, the following will be considered:

a. Items can be considered clean and available for unrestricted use if the item never contacted liquid chemical agent or chemical agent aerosol and meets one of the following criteria:

(1) If in a continuously-controlled environment where the environment is documented to never have exceeded the short-term exposure limit (STEL) concentration when the item is present

(2) If in a continuously-controlled environment where the environment is documented to be greater than the STEL but less than immediately dangerous to life and health (IDLH); and a risk assessment is performed that takes into account factors identified in DA Pam 385-61, Chapter 5-2d.(2).

[3] This policy does not apply to carbon filters or waste disposal.

b. Tools, supplies, equipment, and facilities require decontamination or disposal if the items have contacted liquid chemical agent; were present in a chemical agent aerosol environment; were in a continuously-controlled environment and exposed above the IDLH concentration for any period of time; were in an uncontrolled environment where monitoring indicated the environment exceeded the STEL concentration (i.e., VSL); or were in an uncontrolled environment involving storage, use or presence of chemical agent and where physical factors (such as discoloration, stains, etc.) indicate possible exposure to chemical agent. If an item is determined to be contaminated, a decontamination plan must be developed and carried out. The decontamination plan must be tailored to the ultimate disposition of the items and other factors as necessary.

Cleaning/decontaminant solutions may be general household bleach and/or general detergent or other appropriate decontaminant and technique referenced in Field Manual (FM) 3-11-5 or identified in Table 1, Alternative Treatment Standards for Hazardous Debris (40 CFR 268.45). The Environmental Protection Agency (EPA) recommends and approves the use of the Table 1 alternate treatment standards for RCRA closure purposes. Decontaminant and decontamination technique selected will depend on the contaminant of concern. For example, the use of bleach [sodium hypochlorite (NaOCl)] is a standard decontamination technique for chemical agent-contaminated non-porous surfaces (metal, glass, plastic, etc.) and is identified as a suitable decontaminant under chemical destruction technology in 40 CFR 268.45, Table 1. Similarly, detergent and water washing is identified as an appropriate chemical extraction technique for FM smoke and FS smoke and steam cleaning is identified as an appropriate extraction technology in 40 CFR 268.45, Table 1, for most contaminants.

The decontamination/cleaning solutions are generally applied manually through use of a spray device or by wiping down with cloth or paper towels and wipes.

Soil removal should not be necessary during closure because any incidents involving chemical agent or hazardous waste release during the operational life will have been managed under the RSA-EDS site Contingency Plan (see **Section G** of this permit modification application).

I-1g(1) Closure of Containers [40 CFR 270.14(b)(13) and 264.178; AAC 335-14-8-.02(5)(b)13 and AAC 335-14-5-.09(9)]

The EDS units and associated equipment will be serviced, cleaned, disassembled, and decontaminated according to normal procedures for closeout operations. The EDS units will then be air monitored and the clean water rinsates sampled to verify adequate decontamination based on the contaminant(s) of concern.

Decontamination will be conducted using an appropriate bleach, detergent, bleach/detergent mix or water, followed by a clean water rinse, or steam cleaning (if conducted). The decontamination solution and clean water rinses may be applied manually (for example, manual wipe down using cloths, rags, wipes) or by mechanical means (for example, spray wash, steam clean, or flush through, depending on the component). If headspace monitoring and rinsewater analytical results meet the acceptable levels in **Table I-1-1**, then the EDS units (or equipment item) will be deemed clean for reuse. Decontamination will be repeated until the standards in **Table I-1-1** are met.

I-1g(2) Closure of Tanks [40 CFR 270.14(b)(13) and 264.197; AAC 335-14-8-.02(5)(b)13 and 335-14-5-.10(8)]

There will be no RCRA-permitted hazardous waste tanks at the RSA-EDS site. Therefore, the requirements of this section are not applicable.

I-1g(3) Closure of Waste Piles [40 CFR 270.18(h) and 264.258; AAC 335-14-8-.02(9)h and 335-14-5-.12(9)]

The hazardous waste management units addressed in this permit modification application are not waste piles. Therefore, the requirements of this section are not applicable.

I-1g(4) Closure of Surface Impoundments via Waste Removal [40 CFR 270.17(f) and 264.228; AAC 335-14-8-.02(8)(f) and 335-14-5-.11(9)]

The hazardous waste management units addressed in this permit modification application are not surface impoundments. Therefore, the requirements of this section are not applicable.

I-1g(5) Closure of Incinerators, Boilers, and Industrial Furnaces [40 CFR 264.351; AAC 335-14-5-.15(12)]

The hazardous waste management units addressed in this permit modification application are not incinerators. Therefore, the requirements of this section are not applicable.

I-1g(6) Closure of Land Treatment Facilities [40 CFR 264.280; AAC 335-14-8-.02(11)]

The hazardous waste management units addressed in this permit modification application are not land treatment units. Therefore, the requirements of this section are not applicable.

I-1g(7) Closure of Miscellaneous Units [40 CFR 264.601; AAC 335-14-5-.24(2)]

There will be no miscellaneous units at the RSA-EDS site. Therefore, the requirements of this section are not applicable.

I-1h Closure of Landfills [40 CFR 270.21(e) and 264.310; AAC 335-14-8-.02(12)(e) and 335-14-5-.14(11)]

The EDS units addressed in this permit modification application are not landfills. Therefore, the requirements of this section are not applicable.

I-1i Closure of Drip Pads [40 CFR 264.575; AAC 335-14-5-.23(6)]

The requirements of this section are not applicable; none of the hazardous waste management units addressed in this permit modification application is a drip pad.

I-1j Closure of Containment Buildings [40 CFR 264.1102; AAC 335-14-5-.30(3)]

The requirements of this section are not applicable; the hazardous waste management units addressed in this permit modification application are not a containment building.

I-1k Ancillary Closure Activities [40 CFR 264 Subpart G; AAC 335-14-5-.07]

Closure of the hazardous waste management units and associated equipment will be completed according to the procedures in this section.

I-1k(1) Decontamination Verification

Where contamination is suspected, based on operating history or monitoring, decontamination will be conducted.

I-1k(1)(a) Sampling to Confirm Decontamination

Following each treatment operation, the EDS is serviced, disassembled, cleaned, and decontaminated (if necessary) to acceptable levels for closeout and reuse. Headspace monitoring and/or rinsewater sampling and analysis is conducted to confirm chemical agent decontamination to acceptable levels. Air samples for chemical agent will be monitored using MINICAMS. Confirmation monitoring for chemical agent may be performed using DAAMS. Rinsewaters will be collected in appropriate containers, depending on the volume or location of the rinsewater collection. For example, some rinsates may be collected in spill pans and placed in 55-gallon containers. Others may be retained in wet-vac or steam cleaning units. Rinsewater samples will be collected as identified in **Table I-1-3** and analyzed for the constituents of concern identified in **Table I-1-1.**

For nonchemical agent contaminants, Table 1, Alternative Treatment Standards for Hazardous Debris (40 CFR 268.45), will be followed for verifying decontamination. In most cases, no decontamination verification is required if one of the alternative treatment standards is used as appropriate and applicable. However, when chemical fills containing arsenic have been processed, rinsewater sampling and analysis will be conducted to confirm that cleaning/decontamination has been performed to the acceptable level in **Table I-1-1**.

When chemical agent has been processed, the EDS units and associated equipment will be deemed clean when headspace monitoring and rinsewater sample results meet the acceptable levels presented in **Table I-1-1**. As treatment processing will be conducted in chemical fill campaigns, parameters selected for air and rinsewater sampling and analysis will be based on the chemical fills last processed in the EDS at the time of a temporary closeout or final closure. **Table I-1-3** summarizes the sampling and analysis methods that may be used to identify contamination and confirm decontamination.

I-1k(1)(b) Structures or Equipment Monitoring

All associated equipment or Environmental Enclosure workspace air will be monitored for chemical agent. If necessary, potentially contaminated equipment (either entire piece of equipment or component) will be enclosed in plastic and the headspace in the enclosed space will be sampled. **Table I-1-2** summarizes the monitoring requirements.

Headspace sampling will be conducted using MINICAMS units or collection and analysis of DAAMS tubes for chemical agent. Confirmational sampling for chemical agent may be performed using DAAMS. Headspace monitoring results will be compared to the acceptable levels in **Table I-1-1**. If results do not meet the acceptable levels in **Table I-1-1**, confirmatory samples may be collected to determine if decontamination is required.[4] **Figure I-1-4** shows the process for monitoring to meet temporary closeout and RCRA closure.

During closeout/closure activities, personnel will use appropriate personal protective clothing and equipment as determined by the site-specific Health and Safety Plan. In general, DA Pam 385-61, *Toxic Chemical Agent Safety Standards*, will be followed, as well as OSHA safety standards.

I-1l Schedule for Closure [40 CFR 264.112(b)(6); AAC 335-14-5-.07(3)(b)6]

No specific date has been scheduled for closing the RSA-EDS site operation. **Table I-1-5** presents the typical sequence of activities for a temporary EDS closeout. **Table I-1-6** presents the RCRA closure sequence for an EDS unit. As previously indicated, hazardous wastes generated from normal EDS cleaning/decontamination and closeout procedures would have been removed at the end of each EDS treatment operation, and therefore, would not be present at time of closure.

I-1m Extension for Closure Time [40 CFR 264.113(a) and (b); AAC 335-14-5-.07(4)(a) and (b)]

Closure of each hazardous waste management unit is not expected to exceed the 180 days allowed. No extension is requested at this time.

---

[4] Based on the level of contamination and history of the item, the item may be decontaminated instead of confirming contamination.

I-1n Certification of Closure [40 CFR 264.115; AAC 335-14-5-.07(6)]

Within 60 days of completing closure activities, the U.S. Army will submit a certification, signed by the owner/operator and a qualified, Alabama-licensed Professional Engineer, that the hazardous waste management units have been closed in accordance with the approved closure plan and all applicable regulations. Documentation of closure activities will be maintained by the certifying independent Alabama-registered Professional Engineer and the Army.

I-1o Survey Plat [40 CFR 264.116; AAC 335-14-5-.07(7)]

Since no disposal units will be at the RSA-EDS site, the requirements of this section are not applicable.

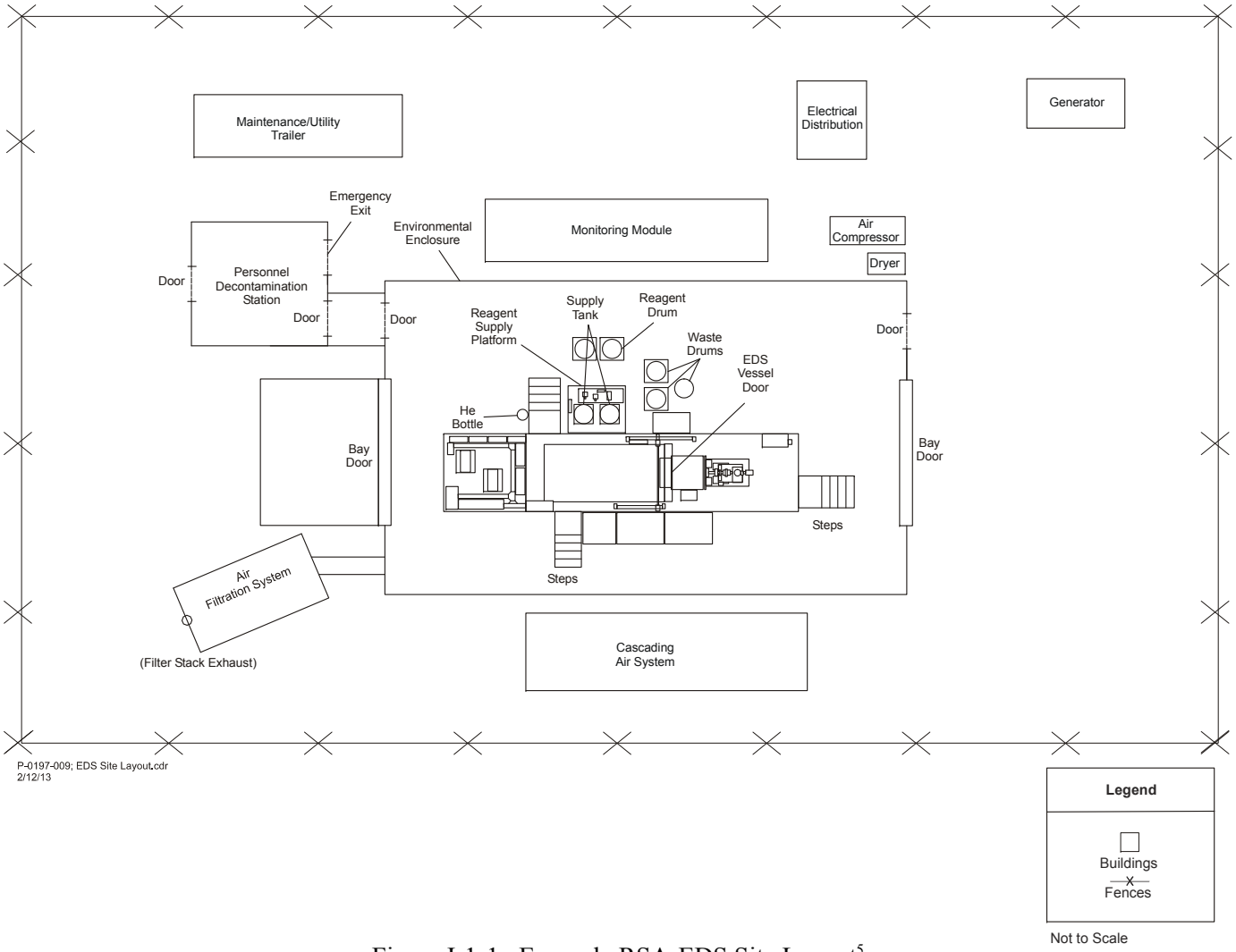

Figure I-1-1. Example RSA-EDS Site Layout[5]

[5] The figure depicts an example EDS layout with one EDS unit; however, final placement of equipment may change or number of EDS units may be increased to two.

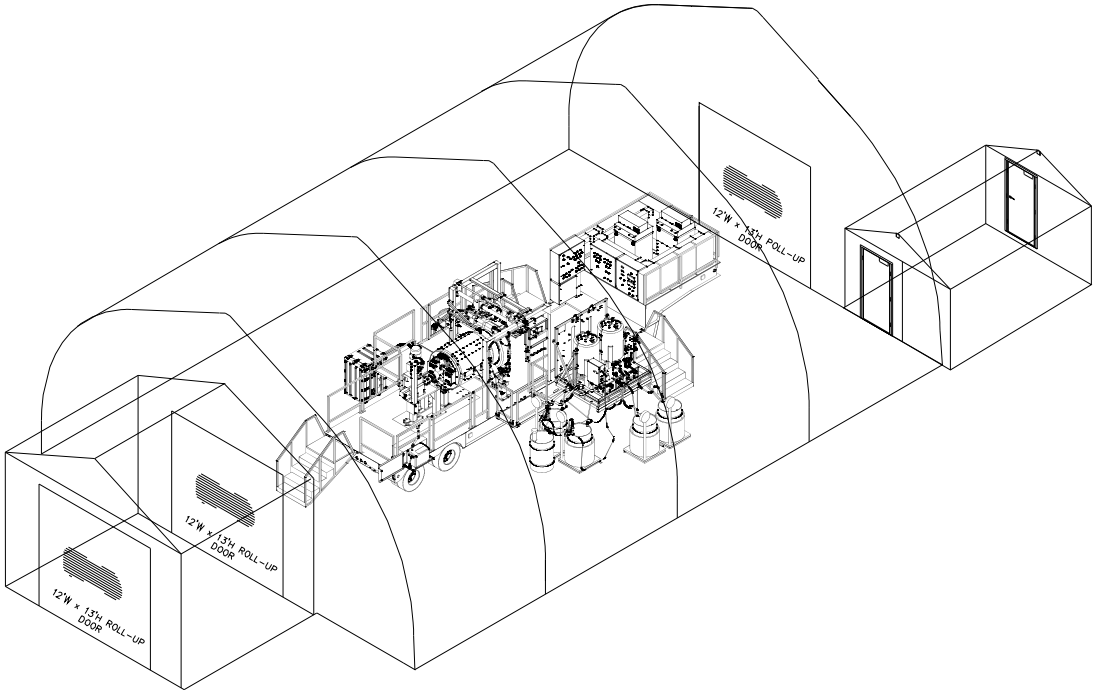

Figure I-1-2. Example of an EDS Inside an Environmental Enclosure

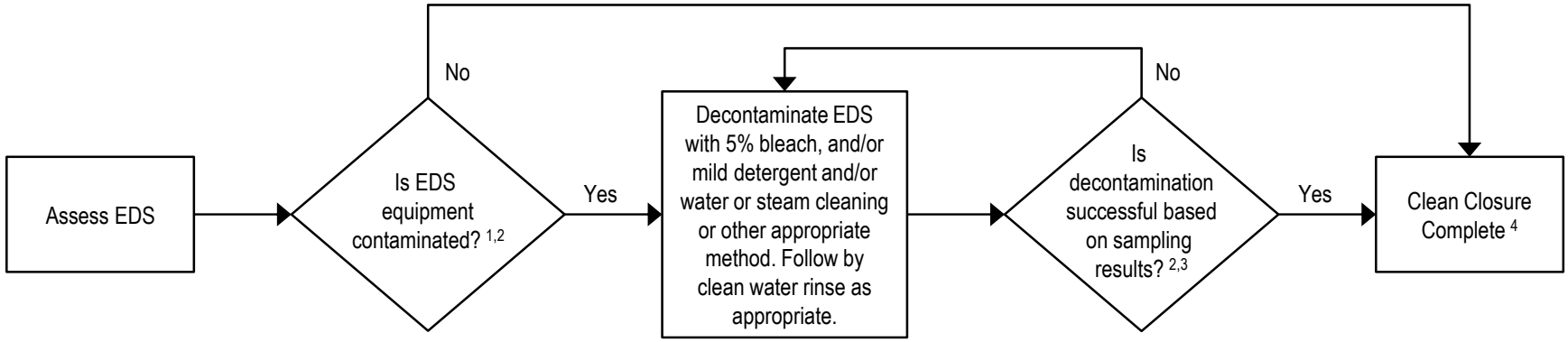

Notes:

1 Contamination of EDS equipment will be determined by air monitoring analytical results, review of the operating log, inspection records and process knowledge.

2 Air monitoring for chemical agent will be performed inside the Environmental Enclosures for the EDS equipment contained therein using MINICAMS® DAAMS for chemical agent. MINICAMS alarms will be confirmed by DAAMS. Compare results against acceptable levels standards for air monitoring (see **Table I-1-1**).

3 Sample and analyze rinsewaters for RCRA hazardous waste constituents of concern. Compare results to acceptable levels for rinsewaters (see **Table I-1-1**).

4 The EDS unit or component can be removed from enclosure structure; enclosure structure deemed clean.

V-0019-020; Decision Process.pptx
6/26/14

Figure I-1-3. General Decision Process for Clean Closure

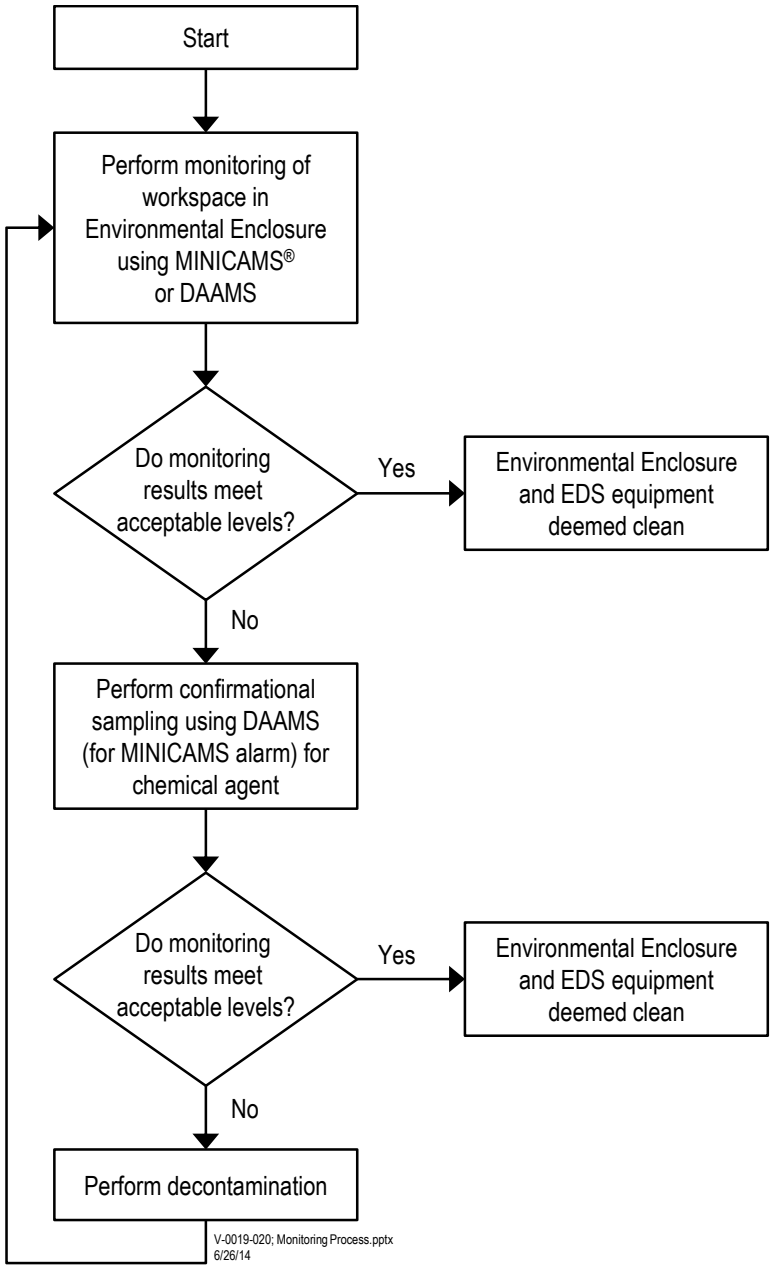

Figure I-1-4. Monitoring Process for Meeting Temporary Closeout and RCRA

Table I-1-1. Acceptable Levels for Decontamination and Reuse[a,b,c]

Media and Parameters	Level[d]
Air Samples	
Mustard Agent (HS, HT)	<0.003 (3×10^{-3}) mg/m^3
Nitrogen Mustard (HN-3)	<0.003 (3×10^{-3}) mg/m^3
Lewisite (L)	<0.003 (3×10^{-3}) mg/m^3
Rinsewaters[e]	
• Mustard Agent (HS, HT)	<50 mg/L
• Nitrogen Mustard (HN-3)	<50 mg/L
• Lewisite (L)	<50 mg/L
• Arsenic	<5 mg/L

Notes:

[a] Since processing will be conducted in chemical campaigns, parameters selected for headspace monitoring and rinsewater sampling and analysis will be based on the last chemical fill processed in an Explosive Destruction System (EDS) at the time of temporary closeout or Resource Conservation and Recovery Act (RCRA) closure.

[b] For the industrial chemical fills, there are no required acceptable level values, as these are not chemical agents. However, the industrial chemical fills phosgene (CG), chloroacetophenone (CN), carbon tetrachloride + chloroacetophenone + benzene (CNB), chloroacetophenone + chloropicrin + chloroform (CNS), diphenylchloroarsine (DA), phenyldichloroarsine (PD), titanium tetrachloride (FM smoke), and sulfur trioxide + chlorosulfonic acid (FS smoke) are characteristic wastes. Any residues will be deactivated and removed during the cleaning/decontamination (e.g., soap and water mixture) activity. A soap and water mix is an appropriate cleaning and decontamination solution and meets the chemical extraction technology description in Table 1 - Alternative Treatment Standards for Hazardous Debris (40 CFR 268.45). For arsenic, a clean determination will be based on rinsewater sampling and analysis. The acceptable level presented for arsenic is the hazardous waste regulatory level for D004. For the industrial chemical fills, any waste residues are deactivated and removed during the cleaning/decontamination activity.

[c] For release to chemical agent workers and use in the chemical agent facilities or operations, the item will be decontaminated and/or monitored to less than the short-term exposure limit (STEL) concentration. Levels presented are from DA Pam 385-61, *Toxic Chemical Agent Safety Standards*, 13 November 2012.

[d] Headspace monitoring levels are considered exceeded when concentration results from at least two cycles of MINICAMS® or Depot Area Air Monitoring System (DAAMS) sampling are above the acceptable level.

[e] Acceptable level value is based on potable water rinsate.

mg/L = milligram per liter
mg/m^3 = milligram per cubic meter

Table I-1-2. Headspace Monitoring Requirements

Item	Headspace Monitoring Conditions
EDS Equipment	Isolate potentially contaminated equipment by enclosing in plastic and monitoring with MINICAMS® or DAAMS.
Fixed Equipment	Monitoring with MINICAMS or DAAMS
Portable Equipment	Monitoring with MINICAMS or DAAMS

Notes:

After the conditions listed in this table are established, MINICAMS® or DAAMS samples will be collected and analyzed. If results meet acceptable levels in **Table I-1-1**, the structure or equipment is considered clean.

DAAMS = Depot Area Air Monitoring System
EDS = Explosive Destruction System

Table I-1-3. Summary of Confirmatory Sampling and Analysis Methods

Sample Source	No. of Samples	Sampling Method/ Equipment	Analytical Parameters	Sample Container	Sample Collection Preservative	Analytical Method[a]	Sample Holding Time
Headspace Sample of EDS Equipment	One sampling cycle for each structure, equipment, or space	Vapor monitor using MINICAMS® or DAAMS[b]	H[c], HN-3, Lewisite	N/A	N/A	U.S. Army approved methods	N/A
Rinsewaters	Two	Grab/ COLIWASA, bottle, dipper	H[c], HN-3, Lewisite	Polyethylene or Glass	4°C	U.S. Army approved methods	30 days
Rinsewaters	Two	Grab/ COLIWASA, bottle, dipper	Arsenic	Polyethylene or Glass	4°C	SW-846 3010A or 3020A/6010C or 6020A	Analyze within 180 days

Notes:

[a] Redstone Arsenal Explosive Destruction System (RSA-EDS) onsite Mobile Analytical Platform will perform chemical agent analysis.
[b] DAAMS will be used to confirm MINICAMS results if MINICAMS alarm for chemical agent.
[c] HD/HS/HT will be measured as H.

COLIWASA = composite liquid waste sampler
DAAMS = Depot Area Air Monitoring System
EDS = Explosive Destruction System
H = Levinstein mustard
HN-3 = nitrogen mustard
N/A = not applicable

Table I-1-4. Maximum Inventory of Wastes

Location	Media	Waste Quantity
		Two EDS Phase 2 Units
EDS[a]		
EDS Containment Vessel	Liquid	≈ 320 gallons
Neutralent and Rinsewater Waste Containers (3)	Liquid	≈ 330 gallons
Trailer Secondary Containment	Liquid	≈ 339 gallons
Reagent Supply Subsystem Secondary Containment Pan	Liquid	≈ 212 gallons
Trailer Secondary Containment Pan Waste Container	Liquid	≈ 150 gallons

Notes:

[a] Values are based on two EDS Phase 2 units for conservative analysis.

EDS = Explosive Destruction System

Table I-1-5. Typical Temporary EDS Closeout Sequence[a]

Activity	Day Completed
Initiate Closeout Activities	Day 0
• Confirm and evaluate any spills, releases, cleanup activities noted • Perform EDS procedures for servicing, cleaning/decontaminating, and preparing the EDS and associated equipment for subsequent use or demobilization • Collect rinsate and headspace monitoring samples to verify adequate decontamination if chemical agent fills were processed • Evaluate chemical agent analysis results and document • Confirm any wastes generated during closeout activities were properly containerized and transferred to the EDS site less than 90-day waste storage area pending shipment to a TSDF	Day 1 to 4
Confirm and document that temporary EDS Closeout Activities listed above are completed	Day 5 to 6

Notes:

[a] One EDS unit; day completed is an estimate

EDS = Explosive Destruction System
TSDF = treatment, storage, and disposal facility

Table I-1-6. EDS RCRA Closure Sequences[a]

Activity	Day Completed
Initiate closure activities.	Day 0
PE will review operating records to: • Confirm and evaluate any spills, releases, cleanup activities noted • Confirm that the EDS procedures for closeout (servicing, cleaning/decontaminating and preparing the EDS and associated equipment for subsequent reuse or demobilization) were followed • Confirm the EDS was monitored to verify adequacy of cleaning/decontamination • Confirm monitoring results were documented and that values met the acceptable levels established for equipment reuse • Confirm that wastes generated from closeout operations were transferred to a less than 90-day waste storage area pending shipment to a TSDF or were shipped directly to a TSDF.	Day 1 to 5
Remove EDS from Environmental Enclosure/Demobilize EDS.	Day 6 to 8
Ship all wastes generated from closure to a permitted hazardous waste TSDF.	Day 21 to 30
Complete all closure activities.	Day 30 to 60
Submit closure certification to ADEM.	60 days after completion of closure

Notes:

[a] Each EDS unit; day completed is an estimate

ADEM = Alabama Department of Environmental Management
EDS = Explosive Destruction System
PE = Professional Engineer (Alabama-licensed)
TSDF = treatment, storage, and disposal facility

I-2 POST-CLOSURE PLAN [40 CFR 270.14(b)(13), 270.17(f), 270.18(h), 270.20(f), 270.21(e), 264.117, 264.118(a), 264.228, 264.280, and 264.310; AAC 335-14-8-.02(5)(b)13, 335-14-8-.02(8)(f), 335-14-8-.02(9)(h), 335-14-8-.02(11)(f), 335-14-8-.02(12)(e), 335-14-5-.07(8), 335-14-5-.07(9), and 335-14-5-.11(9)]

A post-closure plan is not applicable as the hazardous waste management units addressed in this permit modification application are not land disposal units.

I-3 POST-CLOSURE NOTICES [40 CFR 270.14(b)(14) and 264.119; AAC 335-14-8-.02(5)(b)14 and 335-14-5-.07(10)]

This requirement only applies to closed hazardous waste disposal facilities, and therefore, is not applicable.

I-4 CLOSURE COST ESTIMATE [40 CFR 270.14(b)(15) and 264.142; AAC 335-14-8-.02(5)(b)15 and 335-14-5.-08(3)]

A closure cost estimate is not required. ADEM Administrative Code (AAC) 335-14-5-.08(1)(d) exempts the State of Alabama and the federal government from the financial requirements of AAC 335-14-8-.02(5)(b)15 and AAC 335-14-5-.08(3).

I-5 FINANCIAL ASSURANCE MECHANISM FOR CLOSURE [40 CFR 270.14(b)(15), 264.143, and 264.151; AAC 335-14-8-.02(5)(b)15, 335-14-5-.08(4), and 335-14-5-.08(12)]

No financial assurance mechanism is required for the closure of hazardous waste management units addressed in this permit modification application. AAC 335-14-5-.08(1)(d) exempts the State of Alabama and the federal government from the financial requirements of AAC 335-14-8-.02(5)(b)15, AAC 335-14-5-.08(4), and AAC 335-14-5-.08(12).

I-6 POST-CLOSURE COST ESTIMATE [40 CFR 270.14(b)(16) and 264.144; AAC 335-14-8-.02(5)(b)16 and 335-14-5-.08(5)]

A post-closure cost estimate is not required. AAC 335-14-5-.08(1)(d) exempts the State of Alabama and the federal government from the financial requirements of AAC 335-14-8-.02(5)(b)16 and AAC 335-14-5-.08(5).

Moreover, the RSA-EDS site will not need to perform post-closure activities because hazardous wastes or hazardous waste constituents will not remain at the RSA-EDS site after closure.

I-7 FINANCIAL ASSURANCE MECHANISM FOR POST-CLOSURE CARE

[40 CFR 270.14(b)(16), 264.145, and 264.151; AAC 335-14-8-.02(5)(b)16, 335-14-5-.08(6), and 335-14-5-.08(12)]

Post-closure financial assurance is not required. AAC 335-14-5-.08(1)(d) exempts the State of Alabama and the federal government from the financial requirements of AAC 335-14-8-.02(5)(b)16, AAC 335-14-5-.08(6), and AAC 335-14-5-.08(12). Moreover, the RSA-EDS site will not need to perform post-closure activities because hazardous wastes or hazardous waste constituents will not remain at RSA after closure.

I-8 LIABILITY REQUIREMENTS [40 CFR 270.14(b)(17) and 264.147; AAC 335-14-8-.02(5)(b)17 and 335-14-5-.08(8)]

Proof of coverage by a state financial mechanism is not required. AAC 335-14-5-.08(1)(d) exempts the State of Alabama and the federal government from the financial requirements of AAC 335-14-8-.02(5)(b)17 and AAC 335-14-5-.08(8)(a) and (b).

SECTION J

CORRECTIVE ACTION FOR SOLID WASTE MANAGEMENT UNITS

[40 CFR 270.14(d)(1) and 264.101; AAC 335-14-8-.02(5)(d)1 and 335-14-5-.06(12)]

Corrective action requirements and compliance schedule for the Redstone Arsenal (RSA) solid waste management units (SWMUs) are identified in Part V and Part VI of their Hazardous Waste Facility Permit Number AL7210020742.

(This page intentionally left blank.)

SECTION K
OTHER FEDERAL LAWS

[40 CFR 270.14(b)(20) and 270.3; AAC 335-14-8-.02(5)(b)20 and 335-14-8-.01(3)]

The following paragraphs discuss the applicable federal laws as they pertain to the Redstone Arsenal-Explosive Destruction System (RSA-EDS) operations at Redstone Arsenal (RSA), Alabama.

National Environmental Policy Act (NEPA)

A Programmatic Environmental Impact Statement (PEIS), entitled *Final Programmatic Environmental Impact Statement, Transportable Treatment for Non-Stockpile Chemical Warfare Material,* was published in 2001. In addition, an Environmental Assessment (EA), entitled *Proposed Installation and Operation of an Explosive Destruction Technology Facility at the Pueblo Chemical Depot, Pueblo, Colorado,* was published in April 2012. Prior to construction of the EDS site, the project will undergo a NEPA review through the Directorate of Public Works Job Order Request System to be reviewed by Directorate of Public Works representatives and Environmental Management Division subject matter experts. The PEIS and EA include analysis of the Explosive Destruction System (EDS) to treat non-stockpile munitions.

Clean Air Act

A modification request to the RSA Title V air permit addressing operations at the RSA-EDS site will be prepared, encompassing all provisions of the Clean Air Act Amendments. The modification request will be submitted to the Alabama Department of Environmental Management (ADEM), Air Division.

Clean Water Act

Construction and industrial storm water discharge permits may be required for the RSA-EDS site. If required, the U.S. Army Corps of Engineers will prepare and submit permit applications to ADEM. There will be no direct discharges from the RSA-EDS site operations. The RSA-EDS site will have water and sewer lines managed by RSA, as applicable. If the RSA-EDS site is a modular site, there will not be a requirement for water and sewer lines.

Toxic Substances Control Act

Substances regulated under the Toxic Substances Control Act will not be processed at the RSA-EDS site; therefore, this act does not apply.

The National Historic Preservation Act of 1966

The required consultation with the Alabama State Historic Preservation Office is performed as part of the NEPA process. No historic or archaeological resources will be affected by operations at the RSA-EDS site.

The Fish and Wildlife Coordination Act and the Endangered Species Act of 1973

The Endangered Species Act requires the U.S. Environmental Protection Agency (EPA) to ensure any action that it authorizes is not likely to jeopardize the continued existence of any endangered or threatened species or adversely affect its critical habitat. Additional analysis may be required.

The Wild and Scenic Rivers Act

The location of the RSA-EDS site will not affect any wild and scenic rivers, as there are no listed wild and scenic rivers within the RSA or RSA-EDS site.

The Coastal Zone Management Act

This Act does not apply to the RSA-EDS site because it is not located in a coastal zone.

Executive Orders

Executive Order 11988, *Floodplain Management*, stipulates that federal agencies should avoid using floodplain resources. The RSA-EDS site will not be located within the 100-year floodplain.

Executive Order 11990, *Protection of Wetlands*, stipulates that federal agencies should avoid using wetland resources. The RSA-EDS site operations will comply with this Executive Order.

Executive Order 12898, *Federal Actions to Address Environmental Justice in Minority Populations and Low-Income Populations*, requires federal agencies to address adverse health and environmental effects of federal activities on minority and low-income populations. The RSA-EDS site operations will comply with this Executive Order.

Executive Order 13423, *Strengthening Federal Environmental, Energy, and Transportation Management*, which directs federal agencies to implement sustainable practices for energy efficiency and reductions in greenhouse gas emissions, use of renewable energy, reduction in water consumption intensity, acquisition of green products and services, pollution prevention to include the reduction or elimination of the use of toxic and hazardous chemicals and materials, cost-effective waste prevention and recycling programs, increased diversion of solid waste, sustainable design/high performance buildings, vehicle fleet management including use of alternative fuels and reduction of petroleum consumption and electronics stewardship. This Executive Order supersedes Executive Order 13148, *Greening the Government Through Leadership in Environmental Management*. The RSA-EDS site operations will comply with this Executive Order to the extent practical.

Executive Order 13514, *Federal Leadership in Environmental, Energy, and Economic Performance*, expands on the energy reduction and environmental performance requirements for federal agencies identified in Executive Order 13423. This Executive Order sets sustainability goals for federal agencies and focuses on making improvements in their environmental, energy, and economic performance. The Executive Order requires federal agencies to set a 2020 greenhouse gas emissions reduction target within 90 days; increase energy efficiency; reduce fleet petroleum consumption; conserve water; reduce waste; support sustainable communities; and leverage Federal purchasing power to promote environmentally-responsible products and technologies. The RSA-EDS site operations will comply with this Executive Order to the extent practical.

1 (This page intentionally left blank.)

SECTION L

CERTIFICATION

[40 CFR 270.11; AAC 335-14-8-.02(2)]

I certify under penalty of law that this document and all attachments were prepared under my direction or supervision in accordance with a system designed to assure that qualified personnel properly gather and evaluate the information submitted. Based on my inquiry of the person or persons who manage the system, or those persons directly responsible for gathering the information, the information submitted is, to the best of my knowledge and belief, true, accurate, and complete. I am aware that there are significant penalties for submitting false information, including the possibility of fine and imprisonment for knowing violations.

OPERATOR (EDS):

_____ _____

Laurence G. Gottschalk Date
Director, Recovered Chemical Materiel Directorate (RCMD)

OWNER:

_____ _____

William L. Marks, II Date
COL, OD
Commanding
U.S. Army Garrison - Redstone

1 (This page intentionally left blank.)

SECTION M

TECHNICAL DATA PACKAGE

EDS PHASE 2 UNIT

Drawing No.	Sheet No.	Revision No.	Title
A67256	1-5 of 5	N	TRAILER ASSEMBLY V-202 VESSEL ASSEMBLY
A67655	1 of 1	C	FRAG SUPPRESSION SYSTEM 4.2" MORTAR ASSEMBLY
A67656	1 of 1	C	FRAG SUPPRESSION SYSTEM LIVENS ASSEMBLY
A67667	1 of 1	C	FRAG SUPPRESSION SYSTEM M139 BOMBLET ASSEMBLY
A67692	1 of 1	B	FRAG SUPPRESSION SYSTEM 155MM SHELL ASSEMBLY
A67693	1 of 1	D	FRAG SUPPRESSION SYSTEM 8" SHELL ASSEMBLY
A69007-P2	1-2 of 2	C	REAGENT PLATFORM SYSTEM ASSEMBLY
A69448-P2	1 of 1	D	REAGENT PLATFORM ASSEMBLY TANK ASSEMBLY
A69794-P2	1-2 of 2	C	TRAILER ASSEMBLY PROCESS CONTROL PANEL ASSEMBLY
A69797-P2	1-3 of 3	F	PROCESS CONTROL PANEL ASSEMBLY DOOR ASSEMBLY & WIRING DIAGRAMS
A70046	1-5 of 5	I	SYSTEM ASSEMBLY TRAILER ASSEMBLY
A70743	1-3 of 3	G	V-202 VESSEL CONTROL PANEL ASSEMBLY DOOR ASSEMBLY & WIRING DIAGRAMS
A71700	1-4 of 4	M	EDS PHASE 2 SERIES SYSTEM ASSEMBLY
A71703	1 of 1	D	SYSTEM ASSEMBLY PROCESS FLOW DIAGRAM
A71704	1-5 of 5	E	SYSTEM ASSEMBLY PIPING & INSTRUMENTATION DIAGRAM
A73751	1 of 1	C	FRAG SUPPRESSION SYSTEM 4.2 3-PACK FSS ASSEMBLY
A73784	1 of 1	B	FRAG SUPPRESSION SYSTEM 75MM MULTIPLE KIT ASSEMBLY
A73785	1 of 1	D	FRAG SUPPRESSION SYSTEM 75MM MULTIPLE HOLDER ASSEMBLY
A74332	1 of 1	B	FRAG SUPPRESSION SYSTEM 4.2" MORTAR ASSEMBLY
A74333	1 of 1	B	FRAG SUPPRESSION SYSTEM 4.2 MORTAR 6-PACK BOTTOM FRAME ASSEMBLY
A74338	1-2 of 2	A	FRAG SUPPRESSION SYSTEM 4.2 MORTAR 6-PACK HOLDER BASE WELDMENT
A74339	1 of 1	B	FRAG SUPPRESSION SYSTEM 4.2 MORTAR 6-PACK HOLDER TOP
A74350	1 of 1	C	FRAG SUPPRESSION SYSTEM 4.2 MORTAR 6-PACK KIT
A74433	1 of 1	E	4.2 MORTAR 6-PACK KIT 1200G DETONATOR ADAPTER ASSEMBLY
A74434	1 of 1	C	1200G DETONATOR ADAPTER ASSEMBLY 1200G DETONATOR ADAPTER
A74464	1-2 of 2	--	P2 EDS JIB-CRANE LIFT ASSIST ASSEMBLY

EDS PHASE 2 UNIT (Continued)

Drawing No.	Sheet No.	Revision No.	Title
A76116	1 of 1	A	P2 EDS JIB-CRANE, ILIFT ASSEMBLY
A76448	1 of 1	B	FRAG SUPPRESSION SYSTEM M70A1 W/T-STYLE ADAPTER ASSEMBLY
A77285	1-2 of 2	--	ASSEMBLY AFSS W/1.25 DIA RODS
A77881	1-2 of 2	--	AFSS & GTR FULL LENGTH HOLDER
Trail King 3510151	1 of 1	--	M2-01 SUMP ASSEMBLY TK70PS

Note: Drawings were obtained from respective manufacturers and placed on Leidos letterhead for sealing by an Alabama licensed professional engineer to meet permit modification application requirements; drawings are not intended for construction purposes.

RESOURCE CONSERVATION AND RECOVERY ACT HAZARDOUS WASTE PERMIT MODIFICATION
for
THE DEPARTMENT OF THE ARMY EXPLOSIVE DESTRUCTION SYSTEM AT REDSTONE ARSENAL

Submitted to
THE ALABAMA DEPARTMENT OF ENVIRONMENTAL MANAGEMENT
Montgomery, Alabama
by
Redstone Arsenal, Alabama

RECEIVED
FEB 2016
LAND DIVISION

February 2016

Technical Data Package

SECTION M

TECHNICAL DATA PACKAGE

EDS PHASE 2 UNIT

Drawing No.	Sheet No.	Revision No.	Title
A67256	1-5 of 5	N	TRAILER ASSEMBLY V-202 VESSEL ASSEMBLY
A67655	1 of 1	C	FRAG SUPPRESSION SYSTEM 4.2" MORTAR ASSEMBLY
A67656	1 of 1	C	FRAG SUPPRESSION SYSTEM LIVENS ASSEMBLY
A67667	1 of 1	C	FRAG SUPPRESSION SYSTEM M139 BOMBLET ASSEMBLY
A67692	1 of 1	B	FRAG SUPPRESSION SYSTEM 155MM SHELL ASSEMBLY
A67693	1 of 1	D	FRAG SUPPRESSION SYSTEM 8" SHELL ASSEMBLY
A69007-P2	1-2 of 2	C	REAGENT PLATFORM SYSTEM ASSEMBLY
A69448-P2	1 of 1	D	REAGENT PLATFORM ASSEMBLY TANK ASSEMBLY
A69794-P2	1-2 of 2	C	TRAILER ASSEMBLY PROCESS CONTROL PANEL ASSEMBLY
A69797-P2	1-3 of 3	F	PROCESS CONTROL PANEL ASSEMBLY DOOR ASSEMBLY & WIRING DIAGRAMS
A70046	1-5 of 5	I	SYSTEM ASSEMBLY TRAILER ASSEMBLY
A70743	1-3 of 3	G	V-202 VESSEL CONTROL PANEL ASSEMBLY DOOR ASSEMBLY & WIRING DIAGRAMS
A71700	1-4 of 4	M	EDS PHASE 2 SERIES SYSTEM ASSEMBLY
A71703	1 of 1	D	SYSTEM ASSEMBLY PROCESS FLOW DIAGRAM
A71704	1-5 of 5	E	SYSTEM ASSEMBLY PIPING & INSTRUMENTATION DIAGRAM
A73751	1 of 1	C	FRAG SUPPRESSION SYSTEM 4.2 3-PACK FSS ASSEMBLY
A73784	1 of 1	B	FRAG SUPPRESSION SYSTEM 75MM MULTIPLE KIT ASSEMBLY
A73785	1 of 1	D	FRAG SUPPRESSION SYSTEM 75MM MULTIPLE HOLDER ASSEMBLY
A74332	1 of 1	B	FRAG SUPPRESSION SYSTEM 4.2" MORTAR ASSEMBLY
A74333	1 of 1	B	FRAG SUPPRESSION SYSTEM 4.2 MORTAR 6-PACK BOTTOM FRAME ASSEMBLY
A74338	1-2 of 2	A	FRAG SUPPRESSION SYSTEM 4.2 MORTAR 6-PACK HOLDER BASE WELDMENT
A74339	1 of 1	B	FRAG SUPPRESSION SYSTEM 4.2 MORTAR 6-PACK HOLDER TOP
A74350	1 of 1	C	FRAG SUPPRESSION SYSTEM 4.2 MORTAR 6-PACK KIT
A74433	1 of 1	E	4.2 MORTAR 6-PACK KIT 1200G DETONATOR ADAPTER ASSEMBLY
A74434	1 of 1	C	1200G DETONATOR ADAPTER ASSEMBLY 1200G DETONATOR ADAPTER
A74464	1-2 of 2	--	P2 EDS JIB-CRANE LIFT ASSIST ASSEMBLY

EDS PHASE 2 UNIT (Continued)

Drawing No.	Sheet No.	Revision No.	Title
A76116	1 of 1	A	P2 EDS JIB-CRANE, ILIFT ASSEMBLY
A76448	1 of 1	B	FRAG SUPPRESSION SYSTEM M70A1 W/T-STYLE ADAPTER ASSEMBLY
A77285	1-2 of 2	--	ASSEMBLY AFSS W/1.25 DIA RODS
A77881	1-2 of 2	--	AFSS & GTR FULL LENGTH HOLDER
Trail King 3510151	1 of 1	--	M2-01 SUMP ASSEMBLY TK70PS

Note: Drawings were obtained from respective manufacturers and placed on Leidos letterhead for sealing by an Alabama licensed professional engineer to meet permit modification application requirements; drawings are not intended for construction purposes.

REV	DESCRIPTION	DATE	APPROVED

Parts List

ITEM	QT	PART NUMBER	DESCRIPTION	VENDOR	
103	1	SS-810-5-8	45 DEG MALE ELBOW	SWAGELOK	
102	1	SS-12-RS-8	REDUCING BUSHING, 3/4" x 1/2", SS	SWAGELOK	
101	1	A99950	PANEL MOUNTED THERMOCOUPLE READOUT DEVICE BRACKET ASSEMBLY		
100	4		WASHER, FLAT, 1/4, SST		
99	8	90107A107	WASHER, FLAT, 3/4" I.D. x 1 3/4" O.D.	McMASTER-CARR	
98	1	A77911	V-202 SHAFT ASSEMBLY AND DETAILS		SEE NOTE 12
97	1	A77907	GRAYLOC P2 VESSEL SHAFT ASSEMBLY MODIFICATION		SEE NOTE 11
96	4	H90446-82	SPH FACED WASHER	GRAYLOC	SEE NOTE 6
95	4	1300009-205	SET SCREW, 0.313-18 X 0.50 LG, UNC-2A, TEFLON	GRAYLOC	SEE NOTE 6
94	4	92311A720	SET SCREW, CUP POINT, 1/2-13 THREAD x 2" LG.	McMASTER-CARR	
93	2	92196A632	SOCKET HEAD CAP SCREW, 3/8-16 X 2" LG, 18-8 SST	McMASTER-CARR	SEE NOTE 10
92			NOT USED		
91	2		SCR, HEX HD, 1/4-20 x 1" LG, SST		
90	11	91007A641	LOCK WASHER, 3/8", SST	McMASTER-CARR	
89	11	92240A626	SHCS, 3/8-16 X 1 1/4", SST	McMASTER-CARR	
88	1	A76120	ALTERNATE HINGE PIN ASSEMBLY W/ GREASE FITTINGS		SEE NOTE 9
87	1	H91502-1	DOOR SEAL RING	GRAYLOC	SEE NOTE 6
86	2	A99716	HYDRAULIC NUT ASSEMBLY - HYDRAULIC TORQUE NUT		
85	1	A70062-P2	HOUSING/BANANA ADAPTOR ASSEMBLY (FOR REF ONLY, SUPPLIED BY OTHER)		
84	1	H90026-37	FLANGE SEAL RING, SIZE 25	GRAYLOC	SEE NOTE 6
83	1	SS-8-RA-6	SS REDUCING ADAPTER, 1/2" FEMALE NPT X 3/8" NPT	SWAGELOK	
82	6	H90950-1	SCREW, SLOTTED FLT CB, #13-24UNC x 5/8" LG (NOT SHOWN)	GRAYLOC	SEE NOTE 6&15
81	4	H90820-15	SEAL RING RETAINER BLOCK (NOT SHOWN)	GRAYLOC	SEE NOTE 5
80	8	94105A715	SET SCREW, FLAT POINT SOCKET, 1/2"-13 THREAD X 1 1/4" LG	McMASTER-CARR	SEE NOTE 7
79	8	91301A033	SET SCREW, HOLLOW-LOCK SOCKET, 1/2"-13 THREAD X 1/4" LG	McMASTER-CARR	SEE NOTE 7
78	4	H90075-347	KNURLED NUT, 3 1/2 X 8 ACME-2G	GRAYLOC	SEE NOTE 6
77	13	SPX 9600	DUST CAP (FOR ITEMS 30 & 31) (NOT SHOWN)	POWER TEAM	
76	1	A99769	VESSEL DOOR MODIFICATION-DRAIN BLAST SHIELD MOUNTING HOLES	(NOT SHOWN)	
75			NOT USED		
74	1	9046	PRESSURE GAUGE SILICON FILL KIT (NOT SHOWN)	POWER TEAM	SEE NOTE 8
73	-		NOT USED		
72	1	A72591	BLAST PLATE WELDMENT		
71	4		1/4-20 X 3/4 LG. FHI BOLT SS		
70	1	A99995	HINGE PIN ASSEMBLY		SEE NOTE 13
69	1	A73633	GROUND ROD SPIDER ASSEMBLY		
68	1	3/8-TT16-FCN 316	SPIRAL "FULL CONE SPRAY NOZZLE	BETE	
67	1	34.95x0.275 EP SPLICED	O RING	DARCOID NOR-CAL SEAL	
66	1	#2-354EP70	HIGH VOLTAGE FLANGE O-RING	DARCOID NOR-CAL SEAL	
65	1	A70717-P2	INTERIOR DETONATOR JACK ASSEMBLY (NOT SHOWN)		SEE NOTE 8
64	1	A67267	SLIP RING TEFLON SPACER		
63	2	90404A560	SPRING LOADED QUICK PIN	McMASTER-CARR	
62	4	9659	1/4 to 3/8 ADAPTER	POWER TEAM	
61	4	91845A235	JAM NUT, 1 1/4-12	McMASTER-CARR	
60	1	9065	TENSIONER PUMP GAUGE, 10,000 PSI	POWER TEAM	
59	1	SS-810-1-8	MALE CONNECTOR, 1/2 SWAG TO 1/2 MNPT	SWAGELOK	
58	1	A74381	VESSEL HEATER BOX WIRING		
57	1	AC6088O6X078	SLIP RING ASSEMBLY	MOOG COMP GRP	
56	1	MB8	PILLOW BLOCK MOUNTED BEARING, 3 INCH	BOSTON GEAR	
55	2	A71696	DOOR LIFTING HOLE PLUG		
54	1	H8-66M	DUST CAP-LARGE QUICK CONNECT	PARKER	
53	2	H6-66M	DUST CAP-SMALL QUICK CONNECT	PARKER	
52	1	731024	1/2" MALE NPT TO KWIK FLANGE KF	MDC VACUUM PRODUCTS	
51	1	712001	BLANK FLANGE NW25	MDC VACUUM PRODUCTS	
50	1	701001	KWIK FLANGE CLAMP, <100C	MDC VACUUM PRODUCTS	
49	1	AS5106KU83P15	THERMOCOUPLE ASSEMBLY	MINCO PRODUCTS	
48	8		HEX HD SCREW, 1/4-20 X 5/8 LG., SST		
47			NOT USED		
46	26		HEX HD SCREW, 1/4-20 x 1/2" LG., SST		
45	12	92185A622	SCR, SOC HD CAP, 3/8-16 UNC X .75 LG, SST	McMASTER-CARR	
44	8		SCR, HEX HD, 1/2-13 X 1.50 LG, SST		
43	4	97345A601	SHLDR. SCREW, 5/16-18, 3/8 SHLDR DIA 3/5 LG. SHLDR, SST	McMASTER-CARR	
42	8		LOCKWASHER, 1/2", SST		
41	4	92185A626	3/8-16 UNC X 1 1/4 LG SHCS, SST	McMASTER-CARR	
40	6	H300910-108	SHCS, 3/4-10 3 1/4" LG., SST	GRAYLOC	SEE NOTE 5
39	9		HEX NUT, 3/4-10, 316 SST		
38	40		LOCK WASHER, 1/4", SST		
37	1		HEX HD SCREW, 3/4-10 X 2 1/2 LG., SST		
36	11	98370A021	FLAT WASHER, 3/8", SST	McMASTER-CARR	
35	6	MM0825001	MICA BAND HEATER, 36 1/2 I.D. (2 PIECE)	THERM-X	
34	4	9765	HYDRAULIC HOSE, 2 FT. LG.	POWER TEAM	
33	1	9680	10,000 PSI UNION	POWER TEAM	
32	1	9699	45 DEG. GAUGE FITTING	POWER TEAM	
31	6	9793	10,000 PSI QUICK DISCONNECT	POWER TEAM	
30	7	9792	10,000 PSI FEMALE HALF, QUICK DISCONNECT	POWER TEAM	
29	3	9672	3/8 HIG-1 PRESSURE TEE, MFF	POWER TEAM	
28	5	9681	3/8 HIG-1 PRESSURE STREET ELBOW	POWER TEAM	
27	4	H90446-125	HYADRAULIC TORQUE NUT	GRAYLOC	SEE NOTE 6
26	1	A99972	BLAST PLATE INSTALLATION KIT		
25	4	H90075-348	STUD, 3 1/2-8UN-2A	GRAYLOC	SEE NOTE 6
24	1	A71146	HEATER BAND POWER DISTRIBUTION ENCLOSURE, STREET SIDE (HJB1)		
23	2	H90446-93	CLAMP SLIDE LOCK	GRAYLOC	SEE NOTE 6
22	4	A71712	ANTI-ROTATIONAL ADAPTER	McMASTER-CARR	
21	2	A71123	DRAIN ASSEMBLY		
20	1	SS-810-1-6	MALE CONNECTOR, 1/2 TUBE TO 3/8 SWAG	SWAGELOK	
19	1	A70094-P2	HIGH VOLTAGE FEEDTHRU OUTER ASSEMBLY		
18	4	A71711	HIGH VOLTAGE FEEDTHRU		
17	1	A70063-P2	HIGH VOLTAGE FEEDTHRU FLANGE ASSEMBLY		
16	1	A71142	BOTTOM SHROUD ASSEMBLY		
15	1	A71689	HEATER BAND POWER DISTRIBUTION ENCLOSURE, CURB SIDE (HJB2)		
14	4	H90446-124	HYDRAULIC NUT SPACER (17-4 SS)	GRAYLOC	SEE NOTE 6
13	2	A71672	LONG ANTI-ROTATION BAR		
12	2	A91763	SHORT ANTI-ROTATION BAR		
11	1	A69870-P2	BLAST SHIELD-2PIECE-CAP		
10	1	A69871-P2	BLAST SHIELD-2 PIECE RING		
9	1	A71116	POWER DISTRIBUTION ENCLOSURE MOUNTING PLATE	POWER TEAM	
8	3	A67270-P2	BLAST SHIELD, DRAIN		
7	1	A71137	TOP SHROUD ASSEMBLY		
6	1	A71069	DOOR STOP ASSEMBLY		
5	1	A68299	SAFETY RING		
4	1	A99736	LARGER RF BOX ASSEMBLY		
3	1	A68521	V-202 SAMPLE PANEL ASSEMBLY		
2	1	A68231	OPEN DOOR STOP		
1	1	H90063-119	HINGED PRESSURE VESSEL	GRAYLOC	SEE NOTE 6

Parts List

QTY. SHOWN IS FOR 1 ASSEMBLY, 1 ASSEMBLY REQD PER DWG. A70046

SUBSYSTEM: TLA

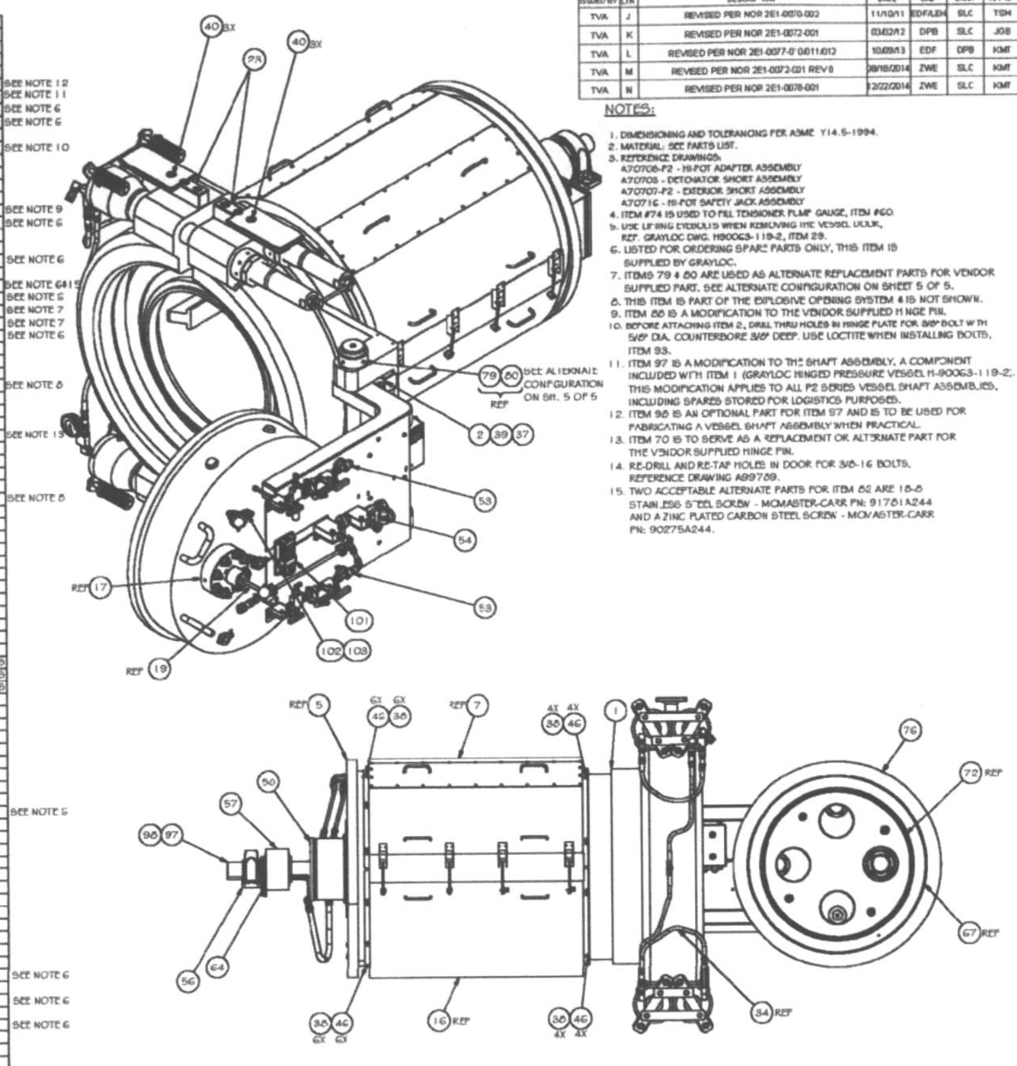

ISSUED BY	LTR	DESCRIPTION	DATE	CAD	CHKR	APPD
TVA	J	REVISED PER NOR 2E1-0070-002	11/10/11	EDF/LEH	SLC	TSH
TVA	K	REVISED PER NOR 2E1-0072-001	03/02/12	DPB	SLC	JGB
TVA	L	REVISED PER NOR 2E1-0077-0 0&011/012	10/09/13	EDF	DPB	KMF
TVA	M	REVISED PER NOR 2E1-0073-001 REV 0	08/18/2014	ZWE	SLC	KMF
TVA	N	REVISED PER NOR 2E1-0078-001	12/22/2014	ZWE	SLC	KMF

NOTES:

1. DIMENSIONING AND TOLERANCING PER ASME Y14.5-1994.
2. MATERIAL: SEE PARTS LIST.
3. REFERENCE DRAWINGS:
   A70708-P2 - HI-POT ADAPTER ASSEMBLY
   A70705 - DETONATOR SHORT ASSEMBLY
   A70707-P2 - EXTERIOR SHORT ASSEMBLY
   A70716 - HI-POT SAFETY JACK ASSEMBLY
4. ITEM #74 IS USED TO FILL TENSIONER PUMP GAUGE, ITEM #60.
5. USE LIFTING EYEBOLTS WHEN REMOVING THE VESSEL DOOR, REF. GRAYLOC DWG. H90063-119-2, ITEM 29.
6. LISTED FOR ORDERING SPARE PARTS ONLY, THIS ITEM IS SUPPLIED BY GRAYLOC.
7. ITEMS 79 & 80 ARE USED AS ALTERNATE REPLACEMENT PARTS FOR VENDOR SUPPLIED PART. SEE ALTERNATE CONFIGURATION ON SHEET 5 OF 5.
8. THIS ITEM IS PART OF THE EXPLOSIVE OPENING SYSTEM & IS NOT SHOWN.
9. ITEM 88 IS A MODIFICATION TO THE VENDOR SUPPLIED HINGE PIN.
10. BEFORE ATTACHING ITEM 2, DRILL THRU HOLES IN HINGE PLATE FOR 3/8" BOLT WITH 5/8" DIA. COUNTERBORE 3/8" DEEP. USE LOCTITE WHEN INSTALLING BOLTS, ITEM 93.
11. ITEM 97 IS A MODIFICATION TO THE SHAFT ASSEMBLY, A COMPONENT INCLUDED WITH ITEM 1 (GRAYLOC HINGED PRESSURE VESSEL H-90063-119-2). THIS MODIFICATION APPLIES TO ALL P2 SERIES VESSEL SHAFT ASSEMBLIES, INCLUDING SPARES STORED FOR LOGISTICS PURPOSES.
12. ITEM 98 IS AN OPTIONAL PART FOR ITEM 97 AND IS TO BE USED FOR FABRICATING A VESSEL SHAFT ASSEMBLY WHEN PRACTICAL.
13. ITEM 70 IS TO SERVE AS A REPLACEMENT OR ALTERNATE PART FOR THE VENDOR SUPPLIED HINGE PIN.
14. RE-DRILL AND RE-TAP HOLES IN DOOR FOR 3/8-16 BOLTS. REFERENCE DRAWING A99769.
15. TWO ACCEPTABLE ALTERNATE PARTS FOR ITEM 82 ARE 18-8 STAINLESS STEEL SCREW - MCMASTER-CARR PN: 91781A244 AND A ZINC PLATED CARBON STEEL SCREW - MCMASTER-CARR PN: 90275A244.

U.S. ARMY CHEMICAL MATERIALS AGENCY
PROJECT MANAGER FOR NON-STOCKPILE CHEMICAL MATERIEL
EDGEWOOD AREA, ABERDEEN PROVING GROUND, MD

EXPLOSIVE DESTRUCTION SYSTEM
PHASE 2 SERIES

Sandia National Laboratory
Livermore, California

TRAILER ASSEMBLY
V-202 VESSEL ASSEMBLY

CONTRACT NO.			
DRAWN BY: C.K. STOKES	DATE 7/15/2002		
CHECKED BY: J. FIRELLIOMINI	DATE 8/9/2002		
APPROVED BY: R. MOEHRLE	DATE 8/9/2002		
NEXT ASSY A70046	USED ON P2 SERIES		
APPLICATION			
SIZE E	CAGE CODE 14214	PROJECT	DRAWING NO. A67256
SCALE N/A	FILE NAME A67256 IDW	SHEET 1 OF 5	REV N

FILE NAME:	A67256-sh1
SOFTWARE:	-
VERSION:	-
NEXT ASSY	USED ON
-	-
-	-

REV STATUS OF SHEETS	REV	
	SH	

CONTRACT NUMBER W911SR-12-D-0006

TASK NUMBER D-0019

UNLESS OTHERWISE SPECIFIED– DIMENSIONS ARE IN INCHES ASME Y14.100M APPLIES
TOLERANCES: .XX ±.02 .XXX ±.005 ∠ ±1° 125√

MATERIAL –
FINISH –

DRAWN 08/26/2014 T. Thompson
CHK 08/26/2014 J. Blevins
TM APVD
APVD 08/26/2014 J. Blevins
08/26/2014 J. Blevins
APVD –
APVD –

leidos National Security Sector

TITLE
TRAILER ASSEMBLY
V-202 VESSEL ASSEMBLY

SIZE	CAGE CODE	DWG. NO.	REV
D	0WR61	A67256	N
SCALE NTS		SHEET 1 of 5	

ALABAMA LICENSED PROFESSIONAL ENGINEER NO. 32143-E JERRY L. BLEVINS

D A67256 REV N

REVISIONS			
REV	DESCRIPTION	DATE	APPROVED

REVISIONS						
ISSUED BY	TR	REVISION NOTE	DATE	CAD	CHKR	APPVD
TVA	N	SEE SHEET 1	12/22/2014	ZWB	SLC	KMF

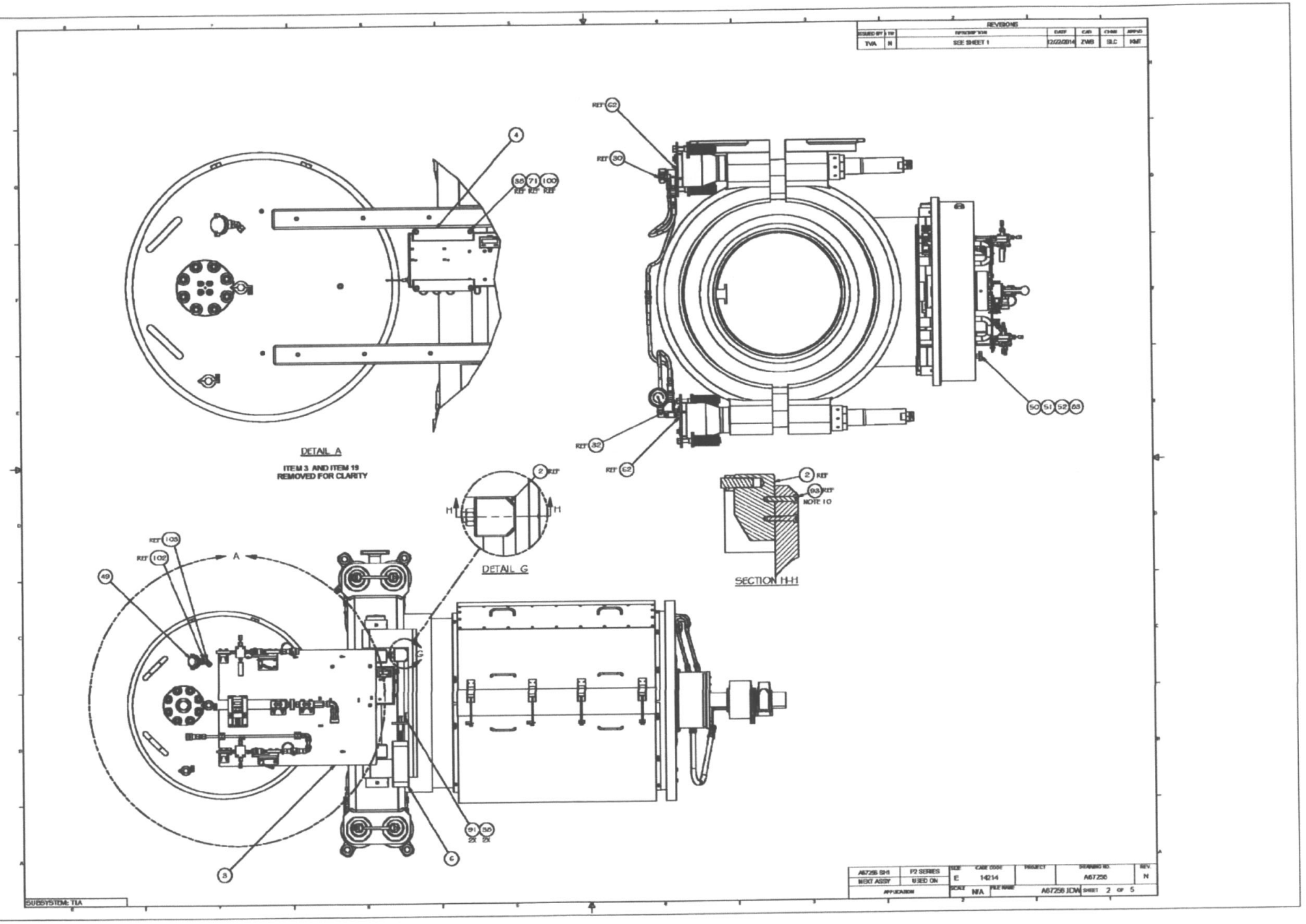

REV STATUS OF SHEETS	REV		
	SH		
CONTRACT NUMBER W911SR-12-D-0006	TASK NUMBER D-0019	leidos National Security Sector	
UNLESS OTHERWISE SPECIFIED– DIMENSIONS ARE IN INCHES ASME Y14.100M APPLIES	DRAWN 08/26/2014 T. Thompson	CHK 08/26/2014 J. Blevins	TITLE TRAILER ASSEMBLY V-202 VESSEL ASSEMBLY
TOLERANCES: .XX ±.02 .XXX ±.005 ∠ ±1° 125	TM APVD 08/26/2014 J. Blevins	TM APVD 08/26/2014 J. Blevins	
MATERIAL —	APVD —		SIZE D / CAGE CODE OWR61 / DWG. NO. A67256 / REV N
FINISH —	APVD —		SCALE NTS / SHEET 2 of 5

FILE NAME: A67256-sh2	
SOFTWARE: — VERSION: —	
—	—
—	—
NEXT ASSY	USED ON

FOLD LINE

D A67256 REV N

REVISIONS				
REV	DESCRIPTION	DATE	APPROVED	

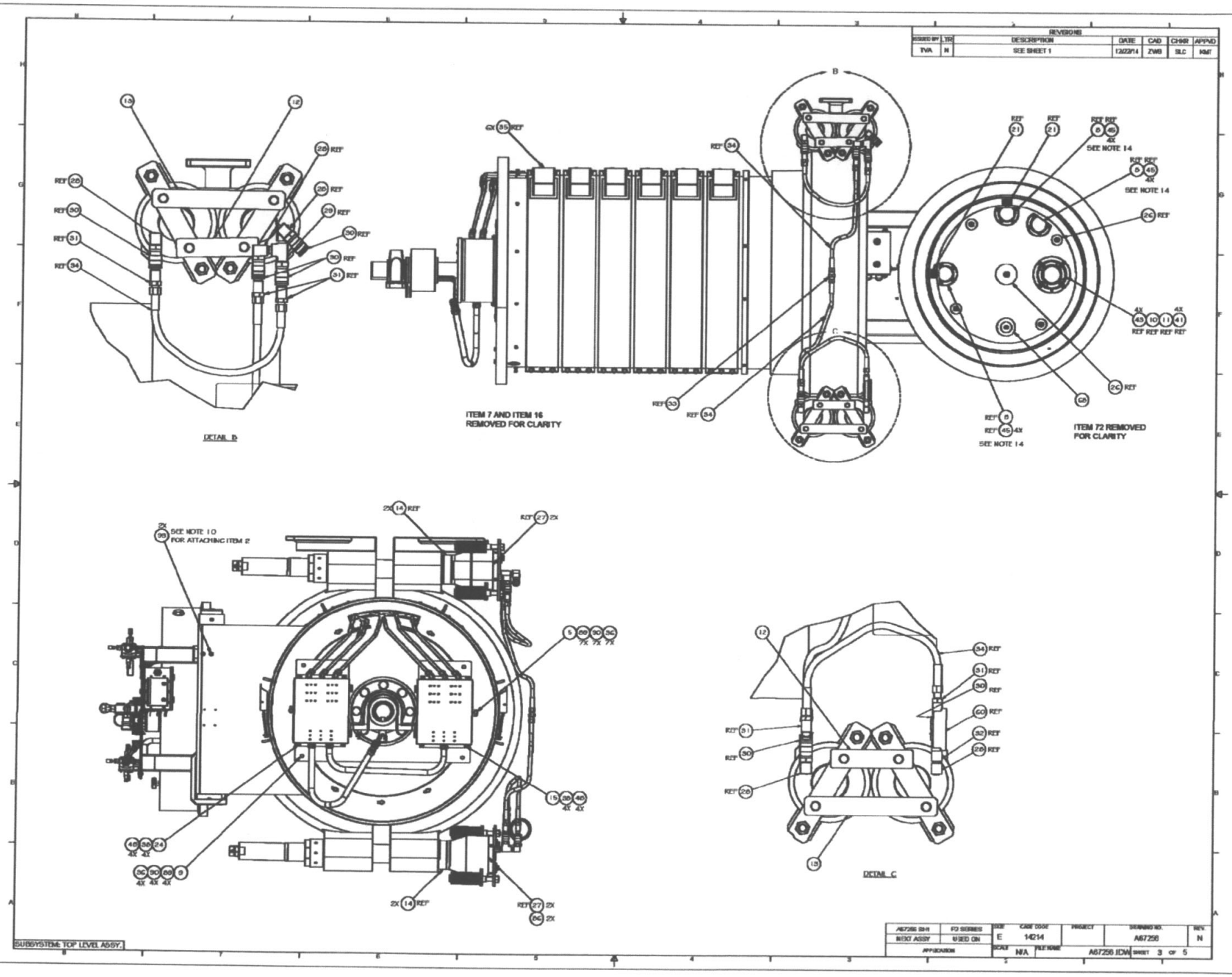

REVISIONS						
DRAWN BY	TR	DESCRIPTION	DATE	CAD	CHKR	APPVD
TVA	N	SEE SHEET 1	12023/14	JWB	SLC	KMT

FILE NAME: A67256-sh3			
SOFTWARE: —	VERSION: —		
—	—		
—	—		
NEXT ASSY	USED ON		

REV STATUS OF SHEETS	REV		
	SH		
CONTRACT NUMBER W911SR-12-D-0006	TASK NUMBER D-0019	leidos National Security Sector	
UNLESS OTHERWISE SPECIFIED– DIMENSIONS ARE IN INCHES ASME Y14.100M APPLIES	DRAWN 08/26/2014 T. Thompson	CHK 08/26/2014 J. Blevins	TITLE TRAILER ASSEMBLY V-202 VESSEL ASSEMBLY
TOLERANCES: .XX ±.02 .XXX ±.005 ∠ ±1° 125	TM APVD 08/26/2014 J. Blevins	08/26/2014 J. Blevins	
MATERIAL —	APVD —		SIZE D / CAGE CODE 0WR61 / DWG. NO. A67256 / REV N
FINISH —	APVD —		SCALE NTS / SHEET 3 of 5

D A67256 N

REVISIONS			
REV	DESCRIPTION	DATE	APPROVED

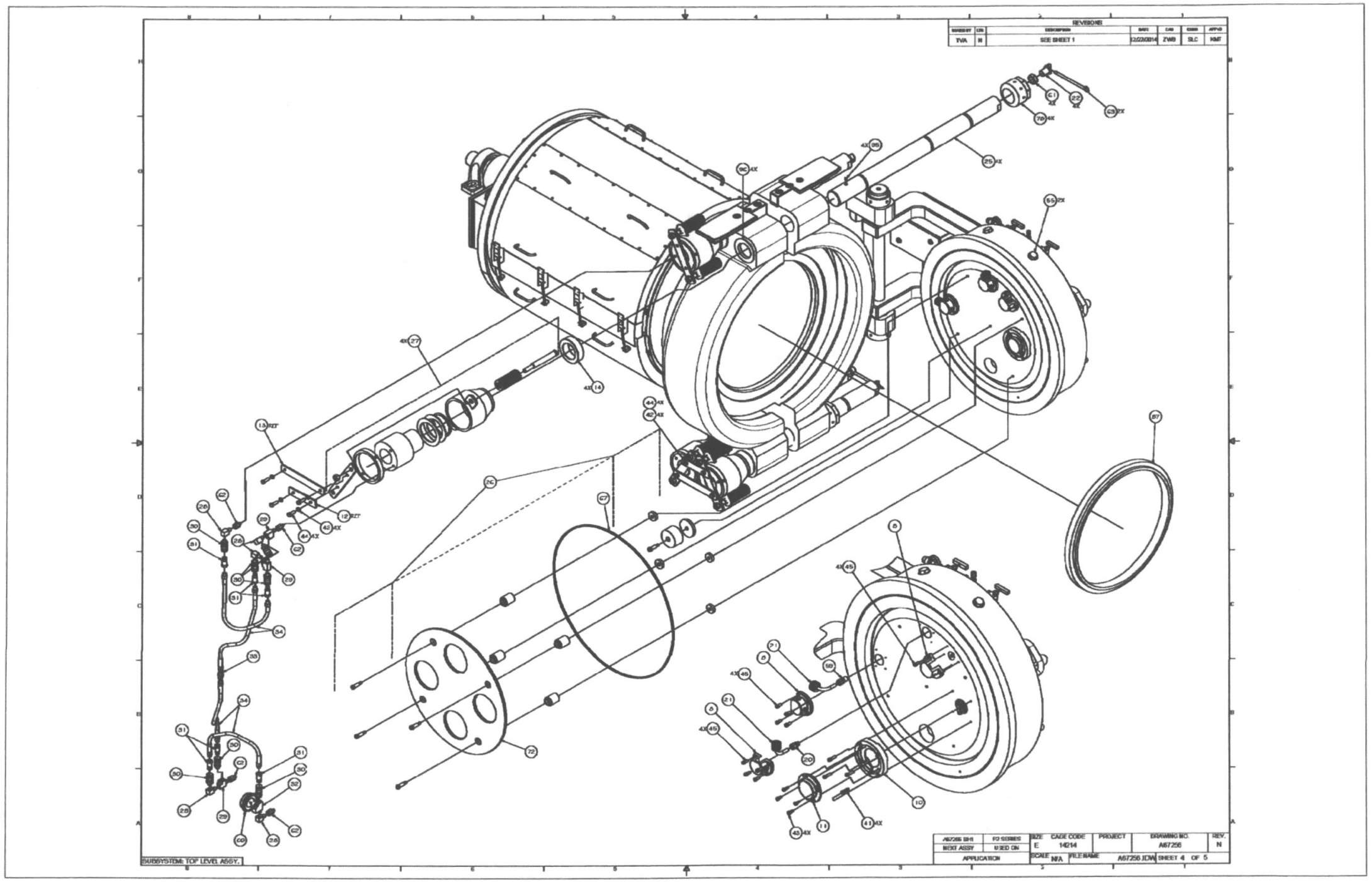

FILE NAME: A67256-sh4	
SOFTWARE: –	VERSION: –
–	–
–	–
NEXT ASSY	USED ON

REV STATUS OF SHEETS	REV		
	SH		
CONTRACT NUMBER W911SR-12-D-0006	TASK NUMBER D-0019	leidos National Security Sector	
UNLESS OTHERWISE SPECIFIED– DIMENSIONS ARE IN INCHES ASME Y14.100M APPLIES	DRAWN 08/26/2014 T. Thompson	CHK 08/26/2014 J. Blevins	TITLE TRAILER ASSEMBLY V-202 VESSEL ASSEMBLY
TOLERANCES: .XX ±.02 .XXX ±.005 ∠ ±1° 125	TM APVD 08/26/2014 J. Blevins	APVD 08/26/2014 J. Blevins	
MATERIAL –	APVD –		SIZE D / CAGE CODE OWR61 / DWG. NO. A67256 / REV N
FINISH –	APVD –		SCALE NTS / SHEET 4 of 5

ALABAMA LICENSED No. 32143-E PROFESSIONAL ENGINEER JERRY L. BLEVINS

D A67256 N

REVISIONS				
REV	DESCRIPTION	DATE	APPROVED	

REVISIONS						
ISSUED BY	TSO	DESCRIPTION	DATE	CAD	CHKR	APPVD
TVA	N	SEE SHEET 1	12/02/2014	ZWE	SLC	KMT

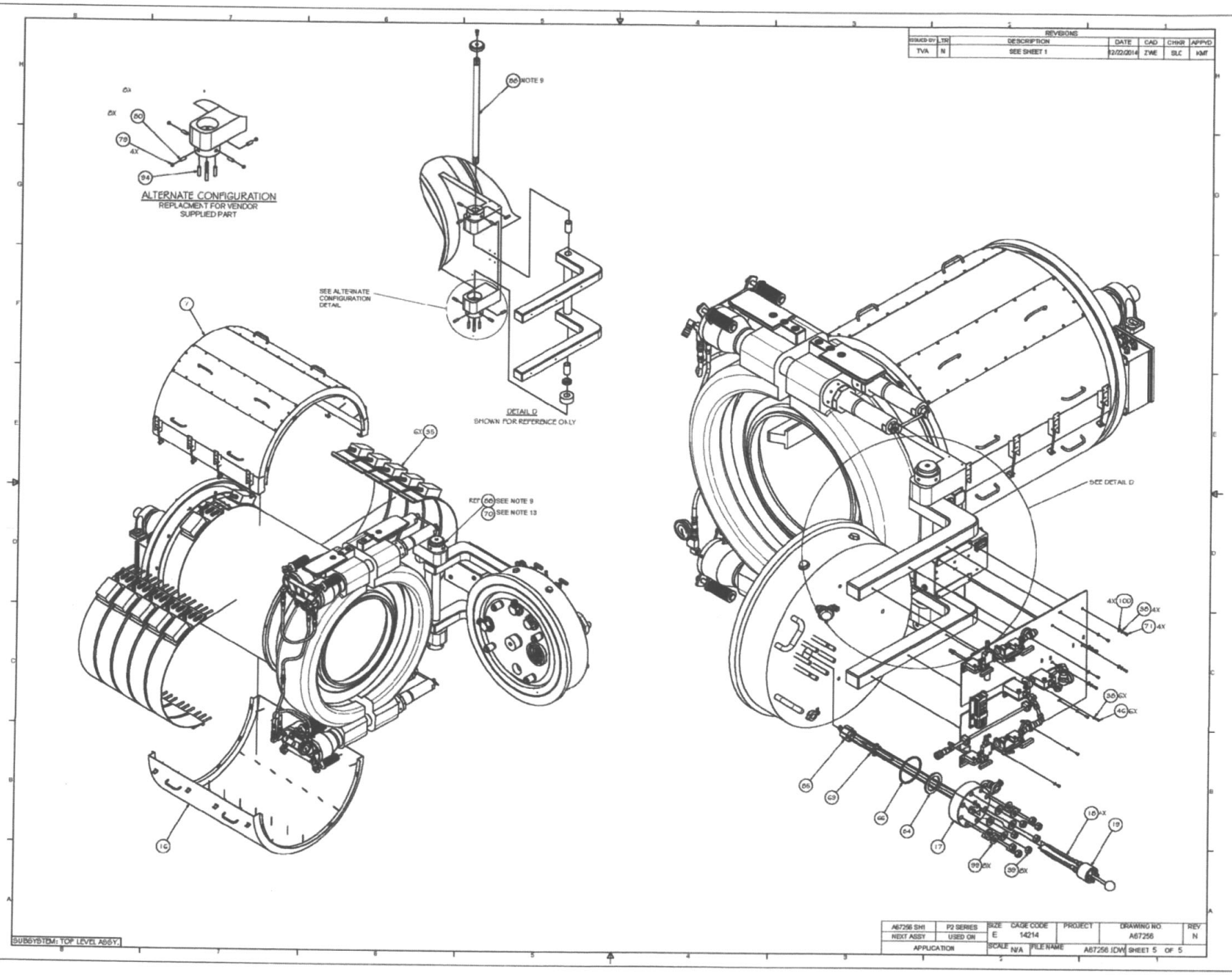

A67256 SH1	P2 SERIES	SIZE	CAGE CODE	PROJECT	DRAWING NO.	REV
NEXT ASSY	USED ON	E	14214		A67256	N
APPLICATION		SCALE N/A	FILE NAME A67256.IDW		SHEET 5 OF 5	

ALABAMA LICENSED PROFESSIONAL ENGINEER JERRY L. BLEVINS 32143-E

REV STATUS OF SHEETS	REV															
	SH															

CONTRACT NUMBER W911SR-12-D-0006	TASK NUMBER D-0019	leidos National Security Sector 2000-A Bob Wallace Avenue, Huntsville, AL 35805	
UNLESS OTHERWISE SPECIFIED– DIMENSIONS ARE IN INCHES ASME Y14.100M APPLIES	DRAWN 08/26/2014 T. Thompson	CHK 08/26/2014 J. Blevins	TITLE TRAILER ASSEMBLY V-202 VESSEL ASSEMBLY
TOLERANCES: .XX ±.02 .XXX ±.005 ±1° 125	TM APVD 08/26/2014 J. Blevins	APVD 08/26/2014 J. Blevins	
MATERIAL —	APVD —		SIZE D / CAGE CODE 0WR61 / DWG. NO. A67256 / REV N
FINISH —	APVD —		SCALE NTS / SHEET 5 of 5

FILE NAME: A67256-sh5	
SOFTWARE: – VERSION: –	
–	–
–	–
NEXT ASSY	USED ON

FOLD LINE

D A67256 REV N

REVISIONS			
REV	DESCRIPTION	DATE	APPROVED

NOTES:

1. THIS DRAWING DEPICTS THE NECESSARY PARTS AND THEIR RELATIVE LOCATIONS FOR COMPLETING THE FINAL ASSEMBLY. THE SEQUENCE OF ASSEMBLY OPERATIONS IS DICTATED BY THE OPERATIONS PROCEDURE.
2. REFERENCE DRAWING A70717.
3. REFERENCE DRAWING A65851 FOR CSC 3D MODEL.

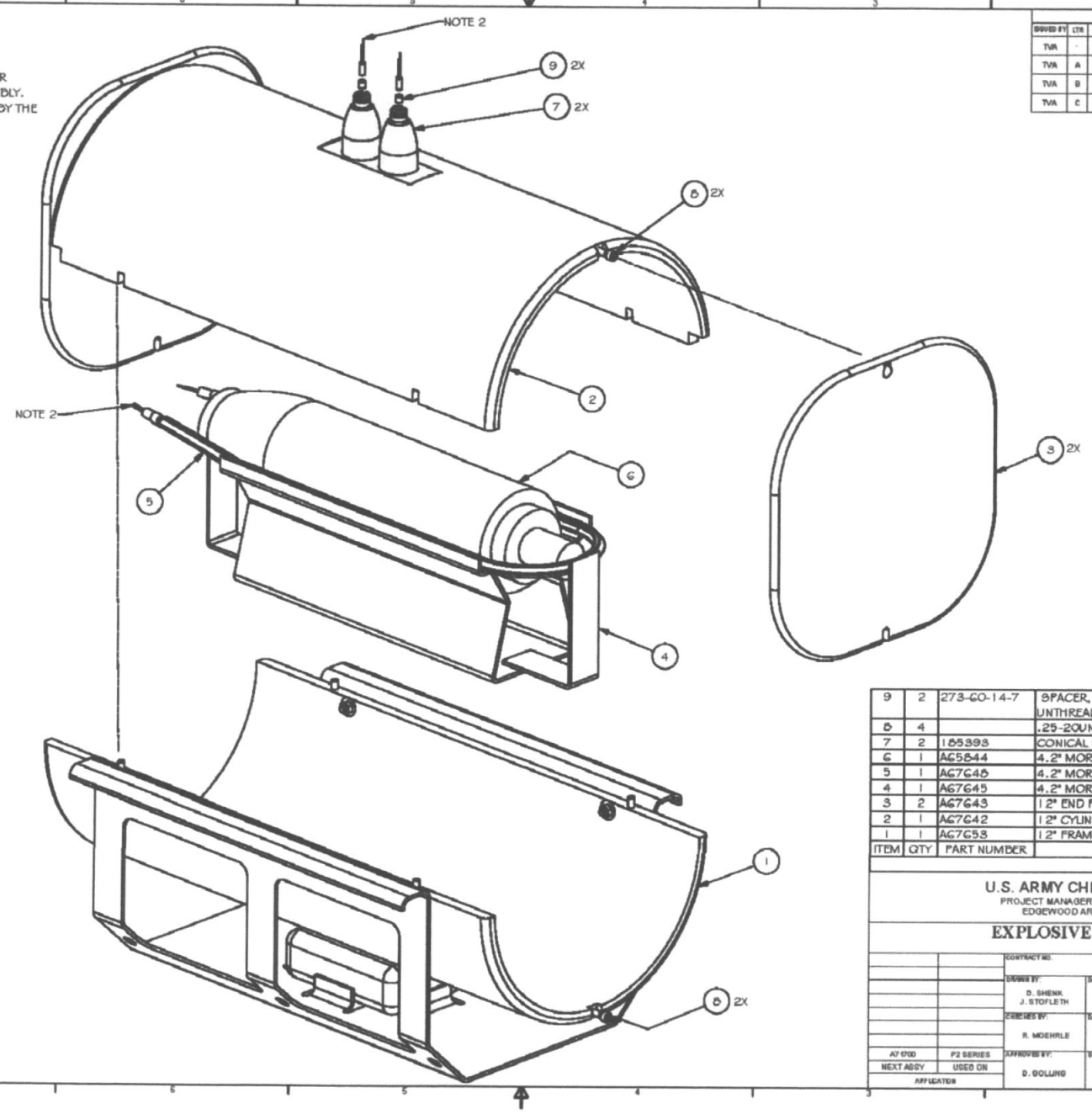

REVISIONS						
DRAWN BY	LTR	DESCRIPTION	DATE	CAD	CHKR	APPVD
TVA	-	PRODUCT BASELINE	07/15/04	KWB	MSP	RWK
TVA	A	REVISED PER NOR 261-0019-001	10/25/06	EDT	SLC	RWK
TVA	B	REVISED PER NOR 261-0067-003	11/10/11	ADM	SLC	TGM
TVA	C	REVISED PER NOR 261-0077-028	10/08/13	EDT	DPB	KMT

ITEM	QTY	PART NUMBER	DESCRIPTION	VENDOR
9	2	273-CO-14-7	SPACER, ROUND, #6 x 1/4" LG. x 1/4" O.D. UNTHREADED (NYLON)	BARNHILL BOLT CO.
8	4		.25-20UNC X 1.25 LG SOC HD CAP SCR.	
7	2	165393	CONICAL SHAPED CHARGE (SMALL) (NOTE 3)	DAY & ZIMMERMAN
6	1	A65844	4.2" MORTAR 3D MODEL	
5	1	A67646	4.2" MORTAR LSC	
4	1	A67645	4.2" MORTAR MUNITION HOLDER	
3	2	A67643	12" END PLATE	
2	1	A67642	12" CYLINDER TOP	
1	1	A67653	12" FRAME/CYLINDER BOTTOM ASSEMBLY	

Parts List

U.S. ARMY CHEMICAL MATERIALS AGENCY
PROJECT MANAGER FOR NON-STOCKPILE CHEMICAL MATERIEL
EDGEWOOD AREA, ABERDEEN PROVING GROUND, MD

EXPLOSIVE DESTRUCTION SYSTEM
PHASE 2 SERIES

CONTRACT NO.	
DRAWN BY: D. SHENK, J. STOFLETH	DATE 5/5/1999
CHECKED BY: R. MOEHRLE	DATE 5/6/1999
APPROVED BY: D. GOLLING	DATE 5/6/1999

Sandia National Laboratory
Livermore, California

FRAG SUPPRESSION SYSTEM

4.2" MORTAR ASSEMBLY

SIZE	CAGE CODE	PROJECT	DRAWING NO.	REV
D	14214		A67655	C

SCALE NONE | PRT NUM A67655.IDW | SHEET 1 OF 1

A7 0700	P2 SERIES
NEXT ASSY	USED ON
APPLICATION	

SUBSYSTEM: 000

ALABAMA LICENSED 32143-E PROFESSIONAL ENGINEER JERRY L. BLEVINS

REV STATUS OF SHEETS	REV																	
	SH																	

CONTRACT NUMBER	TASK NUMBER
W911SR-12-D-0006	D-0019

UNLESS OTHERWISE SPECIFIED– DIMENSIONS ARE IN INCHES ASME Y14.100M APPLIES
TOLERANCES: .XX ±.02 .XXX ±.005 ∠ ±1° 125

DRAWN	CHK
08/26/2014 T. Thompson	08/26/2014 J. Blevins
TM APVD	
08/26/2014 J. Blevins	08/26/2014 J. Blevins
APVD —	
APVD —	

MATERIAL —
FINISH —

leidos National Security Sector

TITLE
FRAG SUPPRESSION SYSTEM
4.2" MORTAR ASSEMBLY

SIZE	CAGE CODE	DWG. NO.	REV
D	0WR61	A67655	C

SCALE NTS | SHEET 1 of 1

FILE NAME: A67655	
SOFTWARE: —	VERSION: —
—	—
—	—
NEXT ASSY	USED ON

FOLD LINE

D A67655 REV C

REVISIONS			
REV	DESCRIPTION	DATE	APPROVED

NOTES:

1. THIS DRAWING DEPICTS THE NECESSARY PARTS AND THEIR RELATIVE LOCATIONS FOR COMPLETING THE FINAL ASSEMBLY. THE SEQUENCE OF ASSEMBLY OPERATIONS IS DICTATED BY THE OPERATIONS PROCEDURE.
2. MODIFY ONE END PLATE BY MACHINING A 2.00±.03 DIAMETER HOLE IN THE CENTER TO ALLOW THE LIVENS TO PROTRUDE THROUGH.
3. REFERENCE DRAWING A70717.
4. REFERENCE DRAWING AG5851 FOR CSC 3D MODEL.

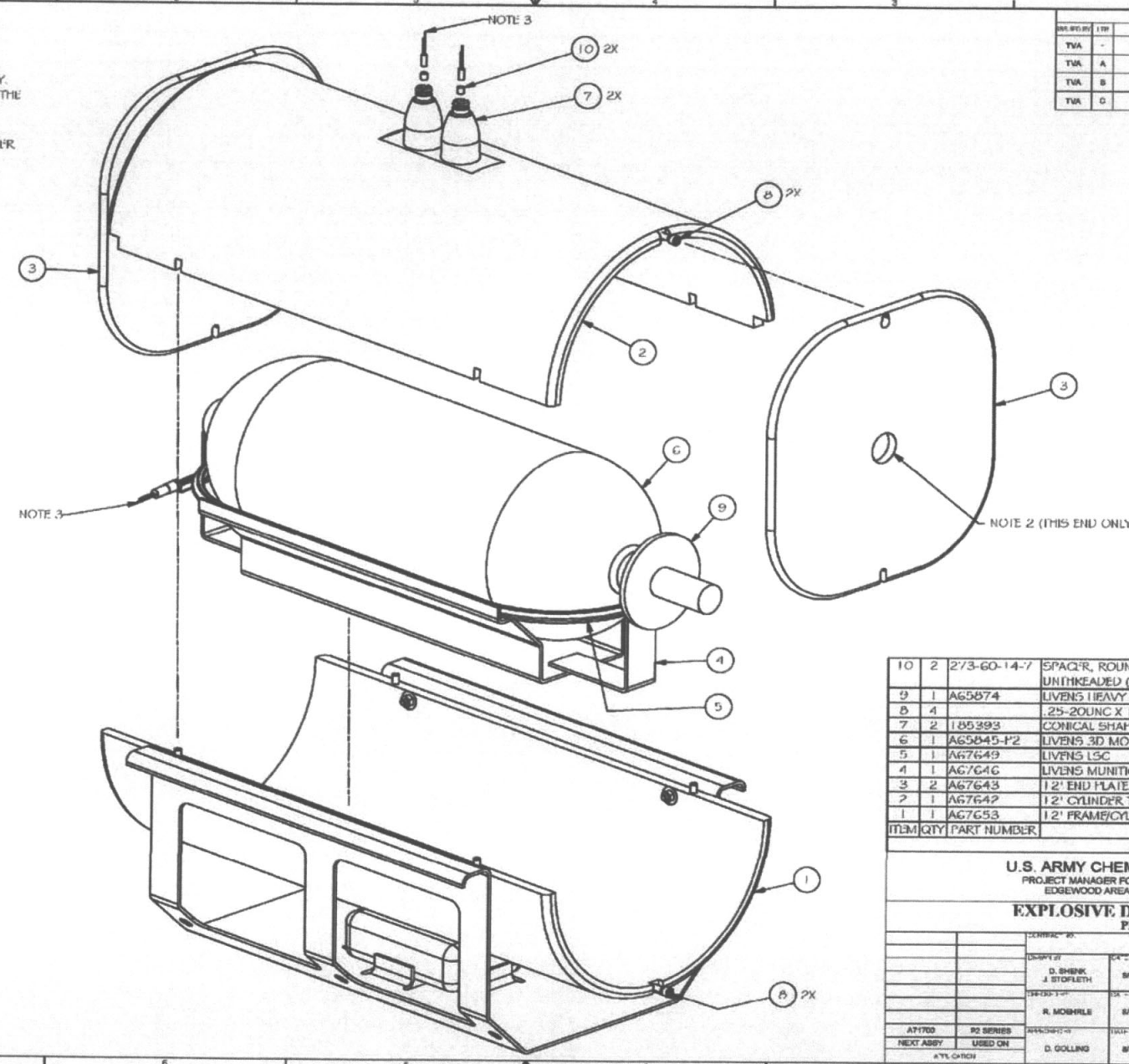

REVISIONS						
SYM/REV	LTR	DESCRIPTION	DATE	DWN	CHKD	APPV'D
TVA	-	PRODUCT BASELINE	07/16/04	KWB	MSP	RWK
TVA	A	REVISED PER NOR 2E1-0019-001	10/25/06	EDF	SLC	RWK
TVA	B	REVISED PER NOR 2E1-0057-006	11/10/11	ADM	SLC	TBM
TVA	C	REVISED PER NOR 2E1-0077-001/027	10/08/13	EDF	DPB	KMT

ITEM	QTY	PART NUMBER	DESCRIPTION	VENDOR
10	2	273-60-14-7	SPACER, ROUND, #6 x 1/4" LG. x 1/4 O.D. UNTHREADED (NYLON)	BARNHILL BOLT CO.
9	1	A65874	LIVENS HEAVY DUTY WASHER	
8	4		.25-20UNC X 1.25 LG SOC HD CAP SCR	
7	2	185393	CONICAL SHAPED CHARGE (SMALL) (NOTE 4)	DAY & ZIMMERMAN
6	1	A65845-P2	LIVENS 3D MODEL	
5	1	A67649	LIVENS LSC	
4	1	A67646	LIVENS MUNITION HOLDER	
3	2	A67643	12" END PLATE (NOTE 2)	
2	1	A67642	12" CYLINDER TOP	
1	1	A67653	12" FRAME/CYLINDER BOTTOM ASSEMBLY	

Parts List

U.S. ARMY CHEMICAL MATERIALS AGENCY
PROJECT MANAGER FOR NON-STOCKPILE CHEMICAL MATERIEL
EDGEWOOD AREA, ABERDEEN PROVING GROUND, MD

EXPLOSIVE DESTRUCTION SYSTEM
PHASE 2 SERIES

Sandia National Laboratory
Livermore, California

FRAG SUPPRESSION SYSTEM

LIVENS ASSEMBLY

D. SHENK, J. STOFFLETH — 5/9/1999
R. MOSHRLE — 5/9/1999
D. GOLLING — 5/9/1999

SIZE D | CAGE CODE 14214 | DWG. NO. A67656 | REV C
SCALE NONE | A67656.IUW | SHEET 1 OF 1

A71700 | P2 SERIES
NEXT ASSY | USED ON

SUBSYSTEM: E05

ALABAMA LICENSED No. 19143-E PROFESSIONAL ENGINEER JERRY L. BLEVINS 10/10/15

REV STATUS OF SHEETS	REV																
	SH																

CONTRACT NUMBER: W911SR-12-D-0006
TASK NUMBER: D-0019

leidos National Security Sector

UNLESS OTHERWISE SPECIFIED— DIMENSIONS ARE IN INCHES ASME Y14.100M APPLIES
TOLERANCES: .XX ±.02 .XXX ±.005 ∠ ±1° 125

DRAWN 08/26/2014 T. Thompson | CHK 08/26/2014 J. Blevins
TM APVD 08/26/2014 J. Blevins | 08/26/2014 J. Blevins
MATERIAL — | APVD —
FINISH — | APVD —

TITLE: FRAG SUPPRESSION SYSTEM LIVENS ASSEMBLY

SIZE D | CAGE CODE OWR61 | DWG. NO. A67656 | REV C
SCALE NTS | SHEET 1 of 1

FILE NAME: A67656-P2
SOFTWARE: — VERSION: —

NEXT ASSY	USED ON
—	—
—	—

REVISIONS			
REV	DESCRIPTION	DATE	APPROVED

NOTES:

1. THIS DRAWING DEPICTS THE NECESSARY PARTS AND THEIR RELATIVE LOCATIONS FOR COMPLETING THE FINAL ASSEMBLY. THE SEQUENCE OF ASSEMBLY OPERATIONS IS DICTATED BY THE OPERATIONS PROCEDURE.
2. DO NOT INSERT A BOLT (ITEM 8) AT THIS LOCATION.
3. REFERENCE DRAWING A70717.
4. REFERENCE DRAWING A65851 FOR CSC 3D MODEL.

REVISIONS						
ASSY %	TRF	PROD PROJ.	DR #	CHT.	CHK#	APPVD
TVA	-	PRODUCT BASELINE	02/18/04	KMB	MBP	RWK
TVA	A	REVISED PER NOR 2E1-0019-001	10/20/09	EDF	SLC	RWK
TVA	B	REVISED PER NOR 2E1-0067-004	11/10/11	ADM	SLC	TDM
TVA	C	REVISED PER NOR 2E1-0077-001/002	10/09/13	EDF	DPB	KMT

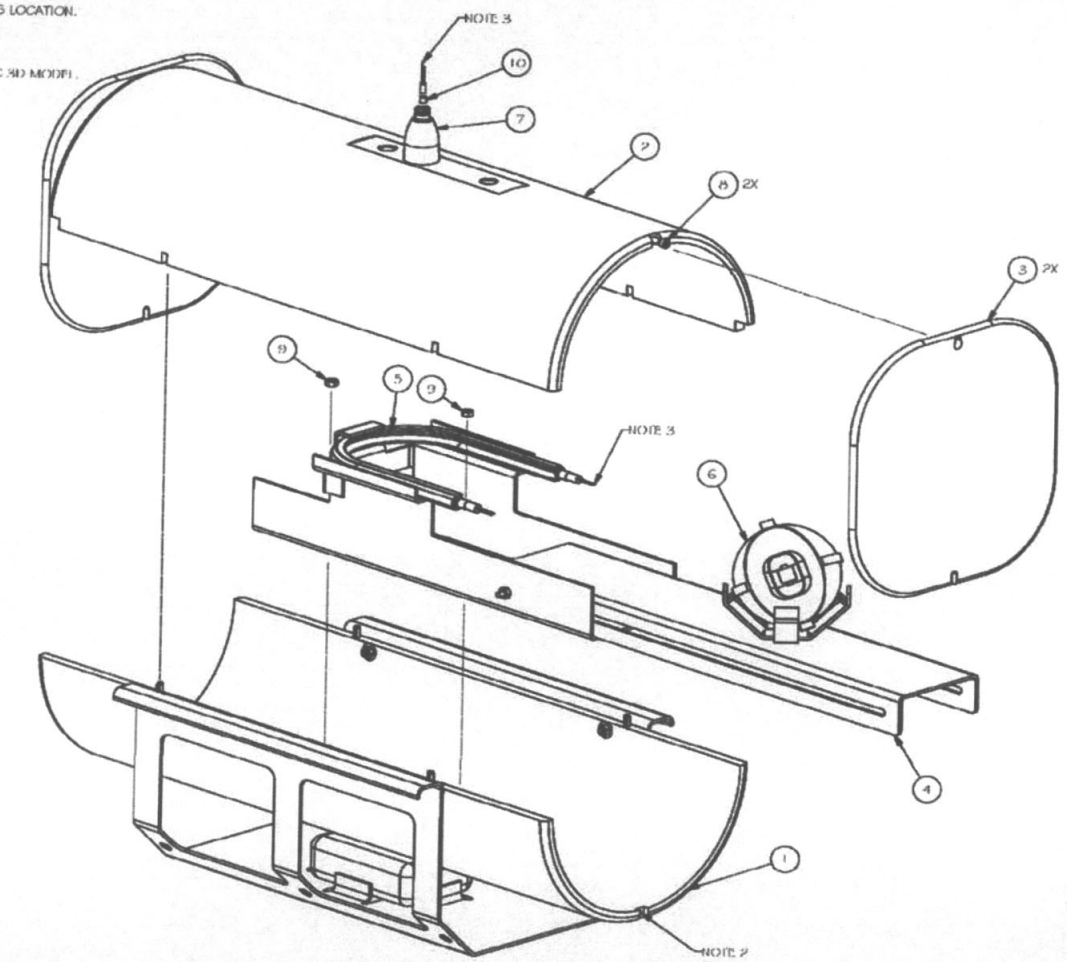

ITEM	QTY	PART NUMBER	DESCRIPTION	VENDOR
10	1	273-60-14-7	SPACER, ROUND .86 x 1/4" LG. x 1/4" O.D. UNTHREADED (NYLON)	HAMMILL BOLT CO.
9	2		.25-20UNC HEX NUT	
8	2		.25-20UNC X 1.25 LG SOC HD CAP SCREW	
7	1	185393	CONICAL SHAPED CHARGE (SMALL) (NOTE 4)	DAY & ZIMMERMAN
6	1	A67657	M139 BOMBLET 3D MODEL	
5	1	A67665	M139 BOMBLET LSC	
4	1	A67671	M139 BOMBLET SLIDING MUNITION HOLDER ASSEMBLY	
3	2	A67643	12" END PLATE	
2	1	A67673	M139 BOMBLET 12" CYLINDER TOP	
1	1	A67670	M139 BOMBLET 12" FRAME/CYLINDER BOTTOM ASSEMBLY	

Parts List

U.S. ARMY CHEMICAL MATERIALS AGENCY
PROJECT MANAGER FOR NON-STOCKPILE CHEMICAL MATERIEL
EDGEWOOD AREA, ABERDEEN PROVING GROUND, MD

EXPLOSIVE DESTRUCTION SYSTEM
PHASE 2 SERIES

Sandia National Laboratory
Livermore, California

FRAG SUPPRESSION SYSTEM

M139 BOMBLET ASSEMBLY

DRAWN: D. SHENK, J. STOFLETH	DATE 8/8/2001		
CHECKED: R. MOSHIRLE	DATE 8/8/2001		
APPROVED: D. GOLLING	DATE 8/8/2001		
A71700	P2 SERIES	SIZE D	DRAWING CODE 14214
NEXT ASSY	USED ON		
APPLICATION		MATERIAL NONE	A67667 OWR

SCALE 1 SHEET 1

SUBSYSTEM: 605

ALABAMA LICENSED 32143-E PROFESSIONAL ENGINEER JERRY L. BLEVINS

9/10/15

D A67667-P2 REV C

REV STATUS OF SHEETS	REV																	
	SH																	

CONTRACT NUMBER W911SR-12-D-0006	TASK NUMBER D-0019	leidos National Security Sector
UNLESS OTHERWISE SPECIFIED– DIMENSIONS ARE IN INCHES ASME Y14.100M APPLIES	DRAWN 08/26/2014 T. Thompson / CHK 08/26/2014 J. Blevins	TITLE FRAG SUPPRESSION SYSTEM M139 BOMBLET ASSEMBLY
TOLERANCES: .XX ±.02 .XXX ±.005 ∠ ±1° 125	TM APVD 08/26/2014 J. Blevins / 08/26/2014 J. Blevins	
MATERIAL –	APVD –	SIZE D / CAGE CODE 0WR61 / DWG. NO. A67667 / REV C
FINISH –	APVD –	SCALE NTS / SHEET 1 of 1

FILE NAME: A67667	
SOFTWARE: –	VERSION: –
–	–
–	–
NEXT ASSY	USED ON

REVISIONS			
REV	DESCRIPTION	DATE	APPROVED

NOTES:

1. THIS DRAWING DEPICTS THE NECESSARY PARTS AND THEIR RELATIVE LOCATIONS FOR COMPLETING THE FINAL ASSEMBLY. THE SEQUENCE OF ASSEMBLY OPERATIONS IS DICTATED BY THE OPERATIONS PROCEDURE.
2. REFERENCE DRAWING A70717-P2.

REVISIONS						
ISSUED BY	LTR	DESCRIPTION	DATE	CAD	CHKR	APPVD
TVA	-	PRODUCT BASELINE	07/19/04	KWB	MSP	RWK
TVA	A	REVISED PER NOR 2S1-2019-001	10/25/06	RDF	SLC	RWK
TVA	B	REVISED PER NOR 2S1-2069-003	08/01/2011	DPB	SLC	TSM

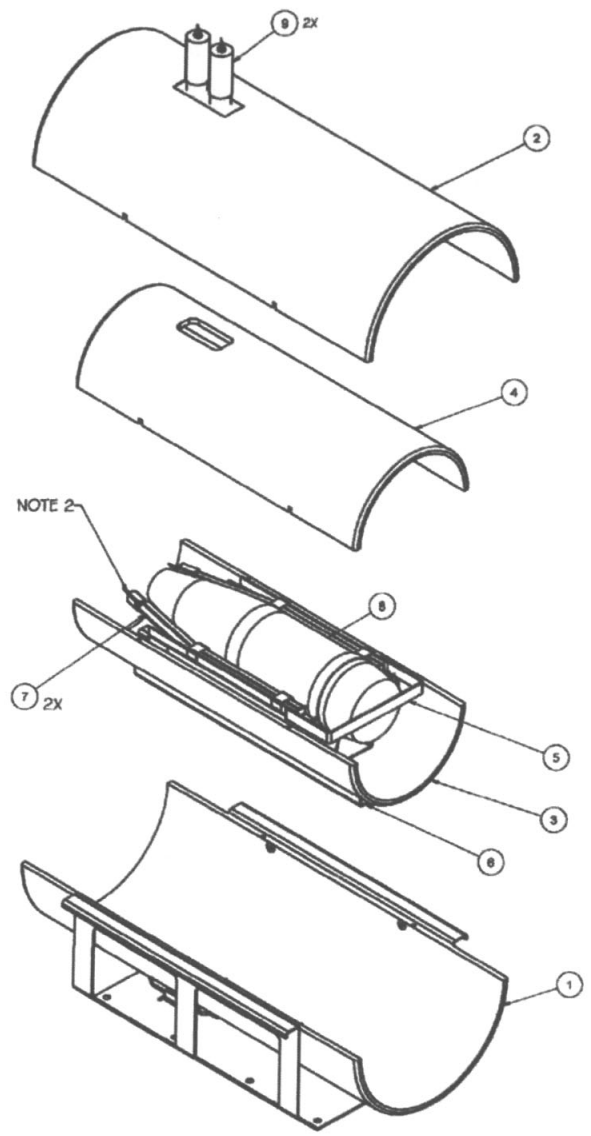

ITEM	QTY	PART NUMBER	DESCRIPTION	COMMENTS
9	2	A71996	CSC ASSEMBLY MODIFICATION	
8	1	A65883	155MM SHELL 3D MODEL	
7	2	A67690	155MM SHELL & 8" SHELL LSC	
6	1	A65896	12" INNER CYLINDER HOLDER	
5	1	A65894	155MM SHELL MUNITION HOLDER	
4	1	A67630	12" THRU HOLE CYLINDER TOP	
3	1	A67627	12" CYLINDER BOTTOM	
2	1	A67632	16" CSC FORWARD CYLINDER TOP	
1	1	A67691	16" CYLINDER BOTTOM FRAME ASSEMBLY	

Parts List

U.S. ARMY CHEMICAL MATERIALS AGENCY
PROJECT MANAGER FOR NON-STOCKPILE CHEMICAL MATERIEL
EDGEWOOD AREA, ABERDEEN PROVING GROUND, MD

EXPLOSIVE DESTRUCTION SYSTEM
PHASE 2 SERIES

Sandia National Laboratory
Livermore, California

FRAG SUPPRESSION SYSTEM

155MM SHELL ASSEMBLY

CONTRACT NO.	
DRAWN BY: D. SHENK	DATE 02/19/2003
CHECKED BY: R. MOEHRLE	DATE 02/19/2003
APPROVED BY: J. STOFLETH	DATE 03/10/2003
SIZE D	CAGE CODE 14214
PROJECT	DRAWING NO A67692
REV B	
SCALE NONE	FILE NAME A67692.IDW
SHEET 1 OF 1	

A71700	P2 SERIES
NEXT ASSY	USED ON
APPLICATION	

SUBSYSTEM: EOS

ALABAMA LICENSED 22143-E PROFESSIONAL ENGINEER JERRY L. BLEVINS

D A67692 REV B

FILE NAME: A67692	
SOFTWARE: –	VERSION: –
–	–
–	–
NEXT ASSY	USED ON

REV STATUS OF SHEETS	REV
	SH
CONTRACT NUMBER W911SR-12-D-0006	TASK NUMBER D-0019
leidos National Security Sector	
UNLESS OTHERWISE SPECIFIED– DIMENSIONS ARE IN INCHES ASME Y14.100M APPLIES	DRAWN 08/26/2014 T. Thompson
	CHK 08/26/2014 J. Blevins
TOLERANCES: .XX ±.02 .XXX ±.005 ±1° 125	TM APVD 08/26/2014 J. Blevins
	APVD 08/26/2014 J. Blevins
MATERIAL –	APVD –
FINISH –	APVD –
TITLE FRAG SUPPRESSION SYSTEM 155MM SHELL ASSEMBLY	
SIZE D	CAGE CODE 0WR61
DWG. NO. A67692	REV B
SCALE NTS	SHEET 1 of 1

REVISIONS			
REV	DESCRIPTION	DATE	APPROVED

NOTES:

1. THIS DRAWING DEPICTS THE NECESSARY PARTS AND THEIR RELATIVE LOCATIONS FOR COMPLETING THE FINAL ASSEMBLY. THE SEQUENCE OF ASSEMBLY OPERATIONS IS DICTATED BY THE OPERATIONS PROCEDURE.
2. REFERENCE DRAWING A70717-P2.
3. SEE DRAWING A71996 FOR 8" SHELL CSC ASSEMBLY MODIFICATION.
4. APPROVED ALTERNATE PART NUMBER FOR ITEM 3: EOS 12043 USE AG5895 UNTIL EXHAUSTED.

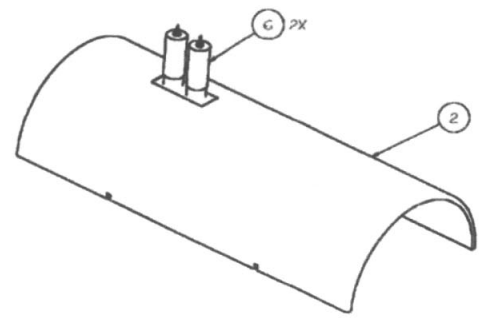

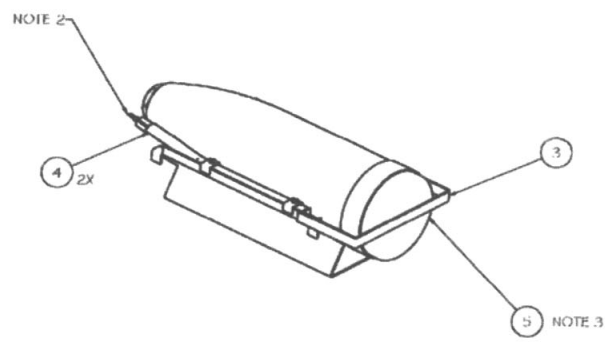

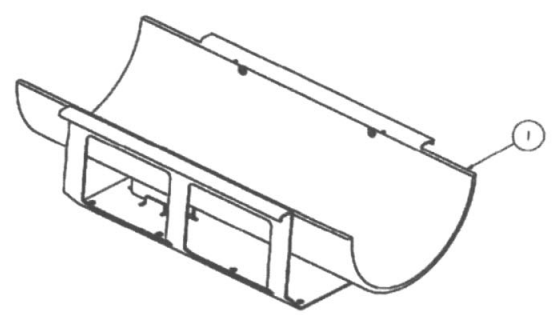

REVISIONS						
ECN NO.	ITEM	DESCRIPTION	DATE	CAD	CHK	APPVD
TVA	A	REVISED PER NOR 2E1-0019-001	10/26/06	EDF	SLC	RWK
TVA	B	REVISED PER NOR 2E1-0042-022	11/30/07	ADM	SLC	RWK
TVA	C	REVISED PER NOR 2E1-0065-004	08/01/2011	DPB	SLC	TBM
TVA	D	REVISED PER NOR 2E1-0061-048	7/7/15	TMA	SLC	KMT

ITEM	QTY	PART NUMBER	DESCRIPTION	COMMENTS
6	2	A71996	CSC ASSEMBLY MODIFICATION	
5	1	A65884	8" SHELL 3D MODEL	
4	2	A67690	155MM SHELL & 8" SHELL LSC	
3	1	A65895	8" SHELL MUNITION HOLDER	
2	1	A67632	16' CSC FORWARD CYLINDER TOP	
1	1	A67691	16' CYLINDER BOTTOM FRAME ASSEMBLY	

Parts List

U.S. ARMY CHEMICAL MATERIALS AGENCY
PROJECT MANAGER FOR NON-STOCKPILE CHEMICAL MATERIEL
EDGEWOOD AREA, ABERDEEN PROVING GROUND, MD

EXPLOSIVE DESTRUCTION SYSTEM
PHASE 2 SERIES

Sandia National Laboratory
Livermore, California

FRAG SUPPRESSION SYSTEM

8" SHELL ASSEMBLY

DRAWN BY	D. SHENK	2/19/2003	
CHECKED BY	R. MOEHRLE	3/19/2003	
APPROVED BY	J. STOFLETH	2/18/2003	

A71720	P2 SERIES	SIZE D	CAGE CODE 14214	PROJECT	DRAWING NO. A67693 REV D
NEXT ASSY	USED ON	SCALE NONE	A67693.IDW	SHEET 1 OF 1	

ALABAMA LICENSED PROFESSIONAL ENGINEER JERRY L. BLEVINS

REV STATUS OF SHEETS	REV																	
	SH																	

CONTRACT NUMBER W911SR-12-D-0006	TASK NUMBER D-0019	leidos National Security Sector	
UNLESS OTHERWISE SPECIFIED-- DIMENSIONS ARE IN INCHES ASME Y14.100M APPLIES	DRAWN 08/26/2014 T. Thompson	CHK 08/26/2014 J. Blevins	TITLE FRAG SUPPRESSION SYSTEM 8" SHELL ASSEMBLY
TOLERANCES: .XX ±.02 .XXX ±.005 ∠ ±1° 125	TM APVD 08/26/2014 J. Blevins	TM APVD 08/26/2014 J. Blevins	
MATERIAL --	APVD --		SIZE D / CAGE CODE 0WR61 / DWG. NO. A67693 / REV D
FINISH --	APVD --		SCALE NTS / SHEET 1 of 1

FILE NAME: A67693
SOFTWARE: -- VERSION: --

--	--
--	--
NEXT ASSY	USED ON

FOLD LINE

D A67693 REV D

NOTES:

1. MATERIAL: SEE PARTS LIST.
2. REMOVE ALL VALVE HANDLES THAT GO THROUGH FRONT PANEL (ITEMS 3 & 4) BEFORE INSTALLING PANELS. THEN REINSTALLING AFTER PANELS HAVE BEEN SCREWED DOWN.
3. DRAWING 24501-P2, PIPING ISOMETRIC, IDENTIFIES ALL TUBING LOCATED ON REAGENT PLATFORM.
4. ITEM 26 IS A PIECE OF ANCILLARY EQUIPMENT, THEREFORE DOES NOT HAVE A STANDARD LOCATION.
5. I.D. TAGS ARE TO BE INSTALLED ON REAGENT SUBSYSTEM VALVES NOT IDENTIFIED ON PANELS. SEE DWG. 24501 FOR VALVE I.D. NUMBERS.
6. TEFLON SHEET MOUNTS TO THE BASE OF THE PANEL.

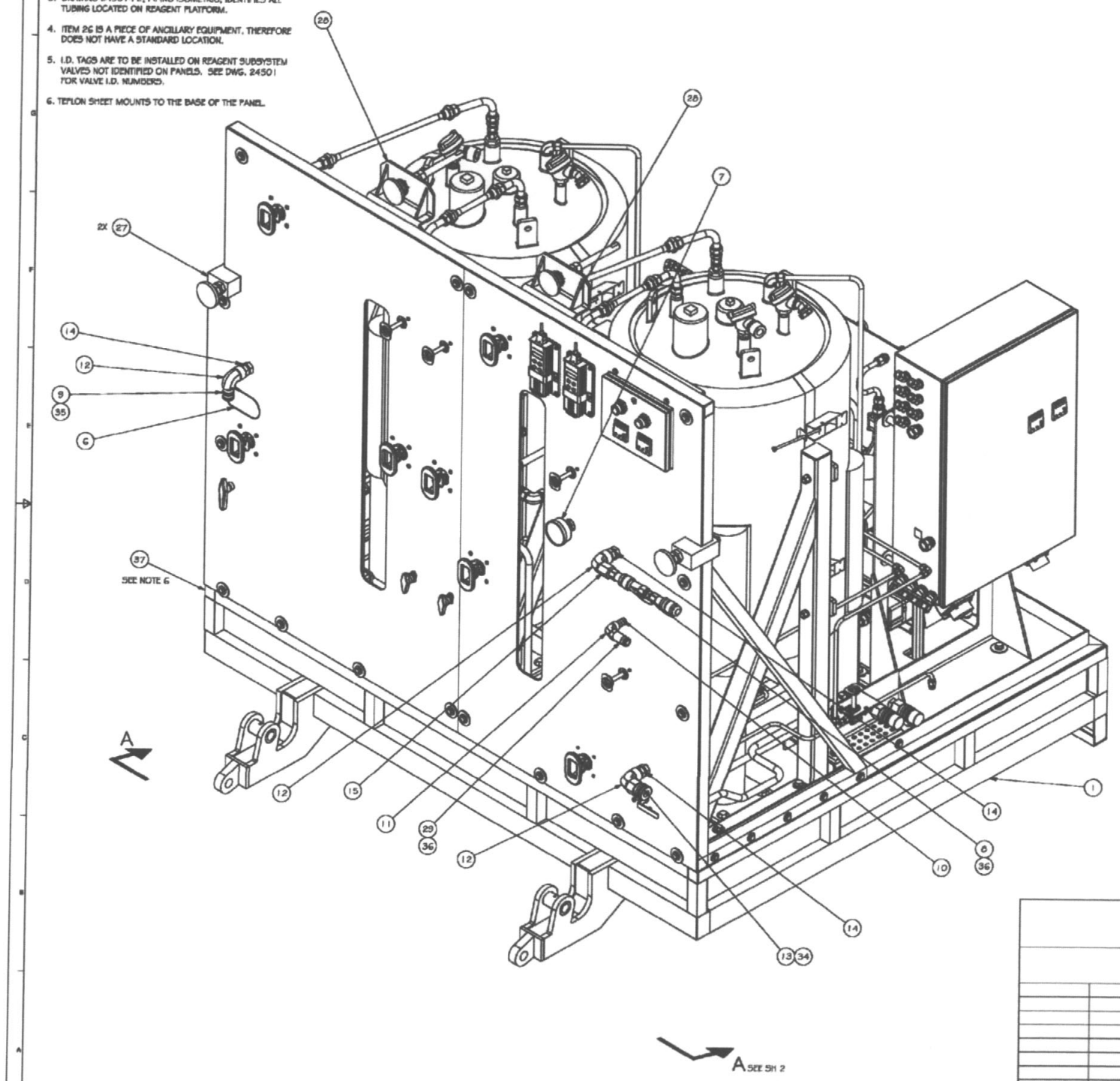

REVISIONS						
ISSUED BY	LTR	DESCRIPTION	DATE	DND	CHKR	APPVD
TVA	-	PRODUCT BASELINE	07/18/04	KWB	MSP	RWK
TVA	A	REVISED PER NOR 2E1-0018-001; 2E1-0022-021	10/25/06	ADM	SLC	RWK
TVA	B	REVISED PER NOR 2E1-0048-006	08/31/08	ADM	SLC	TSM
TVA	C	REVISED PER NOR 2E1-0070-007	11/10/11	TWW	SLC	TSM

QTY. SHOWN IS FOR 1 ASSEMBLY, 1 ASSEMBLY REQ'D PER DWG. A70046

ITEM	QTY	PART NUMBER	DESCRIPTION	VENDOR
38	2	A69631	PANEL MOUNTED THERMOCOUPLE READOUT DEVICE AND BRACKET ASSEMBLY	
37	1		12" X 72" SHEET, PFA OR FEP TEFLON	
36	2	NR-50	1/2" QUICK COUPLING DUST PLUG	PARKER
35	1	65745T92	3/4" FEMALE THREAD BRASS CAP W/WASHER	MCMASTER-CARR
34	1	SS-QF12-BP	BODY PROTECTOR FOR 3/4" QF SERIES FULL-FLOW QUICK-CONNECT	SWAGELOK
33	1	3606T79	CONNECTOR (NOT SHOWN) SEE NOTE 5	MCMASTER CARR
32	1	3606T16	CHAIN (NOT SHOWN) SEE NOTE 5	MCMASTER CARR
31	1	1541T45	TAG (NOT SHOWING SEE NOTE 5	MCMASTER CARR
29	1	P5-372-6FF-E5	3/8 QC NIPPLE, 3/8 FNPT, EP SEALS	PARKER
28	2	A69610-P2	REAGENT PLATFORM FOOT ASSEMBLY	
27	2	A72524-P2	SUPPORT FOOT BRACKET ASSEMBLY	
26	1	A70131-P2	QUICK CONNECT ADAPTER (NOT SHOWN) SEE NOTE 4	
25	16		FLAT WASHER, 3/8 SST	
24	16		3/8 FLAT WASHER, SST	
23	16		LOCKWASHER, 3/8 SST	
22	6		NUT, HEX, 3/8-16, SST	
21	6		SCR, HEX HD, 3/8 X 2.5 LG, SST	
20	10		SCR, HEX HD, 3/8 X 1.00 LG, SST	
19	4		1/4" FLAT WASHER, SST	
18	4		LOCK WASHER 1/4"	
17	4		NUT, HEX, 1/4-20, SST	
16	4		SCREW, HEX HD, 1/4 X 2.75 LG, SST	
15	1	SS-12-RA-6	REDUCING ADAPTER, 3/4 FNPT X 3/8 MNPT	SWAGELOK
14	3	SS-1210-11-12	BULKHEAD MALE CONNECTOR, 3/4 SWAG TO 3/4 MNPT	SWAGELOK
13	1	SS-QF12-S-12FF-EP	QUICK DISCONNECT, FULL FLOW, 3/4 FEM NPT	SWAGELOK
12	3	SS-12-SE	STREET ELBOW, 3/4 FNPT X 3/4 MNPT	SWAGELOK
11	1	SS-6-SF	STREET ELBOW, 3/8 FEM NPT X 3/8 MALE NPT	SWAGELOK
10	1	SS-600-11-6	MALE CONNECTOR, 3/8 IN TUBE OD X 3/8 IN MALE NPT	SWAGELOK
9	1	73605T93	HOSE ADAPTER, 3/4 MALE HOSE X 3/4 NPT	McMASTER-CARR
8	1	P5-371-6FF-E5	3/8 QC COUPLER 3/8 FNPT, EP SEALS	PARKER
7	1	25-10095WL-025-XLC	PRESSURE GAUGE	ASHCROFT
6	1	A70147-P2	LANYARD H2O CAP ASSEMBLY	
5	4	A69206-P2	PRESSURE READOUT BOX SPACER	
4	1	A69305-P2	PANEL RIGHTSIDE	
3	1	A69249-P2	PANEL LEFTSIDE	
2	1	A69564-P2	PRESSURE READOUT BOX ASSEMBLY	
1	1	A69004-P2	REAGENT PLATFORM ASSEMBLY	

Parts List

U.S. ARMY CHEMICAL MATERIALS AGENCY
PROJECT MANAGER FOR NON-STOCKPILE CHEMICAL MATERIEL
EDGEWOOD AREA, ABERDEEN PROVING GROUND, MD

EXPLOSIVE DESTRUCTION SYSTEM
PHASE 2 SERIES

Sandia National Laboratory
Livermore, California

TRAILER ASSEMBLY

REAGENT PLATFORM SYSTEM ASSEMBLY

A70046	P2 SERIES
NEXT ASSY	USED ON
APPLICATION	

CONTRACT NO.
DRAWN BY: Schwinghammer — DATE: 11/28/2001
CHECKED BY: Balluomini — DATE: 03/14/2002
APPROVED BY: R Watson — DATE: 03/14/2002
SIZE: E — CAGE CODE: 14214 — PROJECT — DRAWING NO.: A69007-P2 — REV.: C
SCALE: 1/4 — FILE NAME: A69007-P2.IDW — SHEET 1 OF 2

SUBSYSTEM: R55

REVISIONS				
REV	DESCRIPTION	DATE	APPROVED	

ALABAMA LICENSED 32143-E PROFESSIONAL ENGINEER JERRY L. BLEVINS 12/12/15

FILE NAME: A69007-P2	
SOFTWARE: –	VERSION: –
–	–
–	–
NEXT ASSY	USED ON

REV STATUS OF SHEETS	REV	SH

CONTRACT NUMBER: W911SR-12-D-0006
TASK NUMBER: D-0019
UNLESS OTHERWISE SPECIFIED– DIMENSIONS ARE IN INCHES ASME Y14.100M APPLIES
TOLERANCES: .XX ±.02 .XXX ±.005 ∠ ±1° 125
DRAWN: 08/26/2014 T. Thompson — CHK: 08/26/2014 J. Blevins — TM APVD: 08/26/2014 J. Blevins — 08/26/2014 J. Blevins
MATERIAL: – — APVD: –
FINISH: – — APVD: –

leidos National Security Sector
2400-A Bur MD Corporate Center Belle Aberdeen, MD 21005

TITLE: REAGENT PLATFORM SYSTEM ASSEMBLY

SIZE	CAGE CODE	DWG. NO.	REV
D	0WR61	A69007-P2	C

SCALE NTS — SHEET 1 of 2

D A69007-P2 REV C

REVISIONS						
ISSUED BY	LTR	DESCRIPTION	DATE	CAD	CHKR	APPVD
TVA	C	SEE SHEET 1	11/10/11	TWW	SLC	TSM

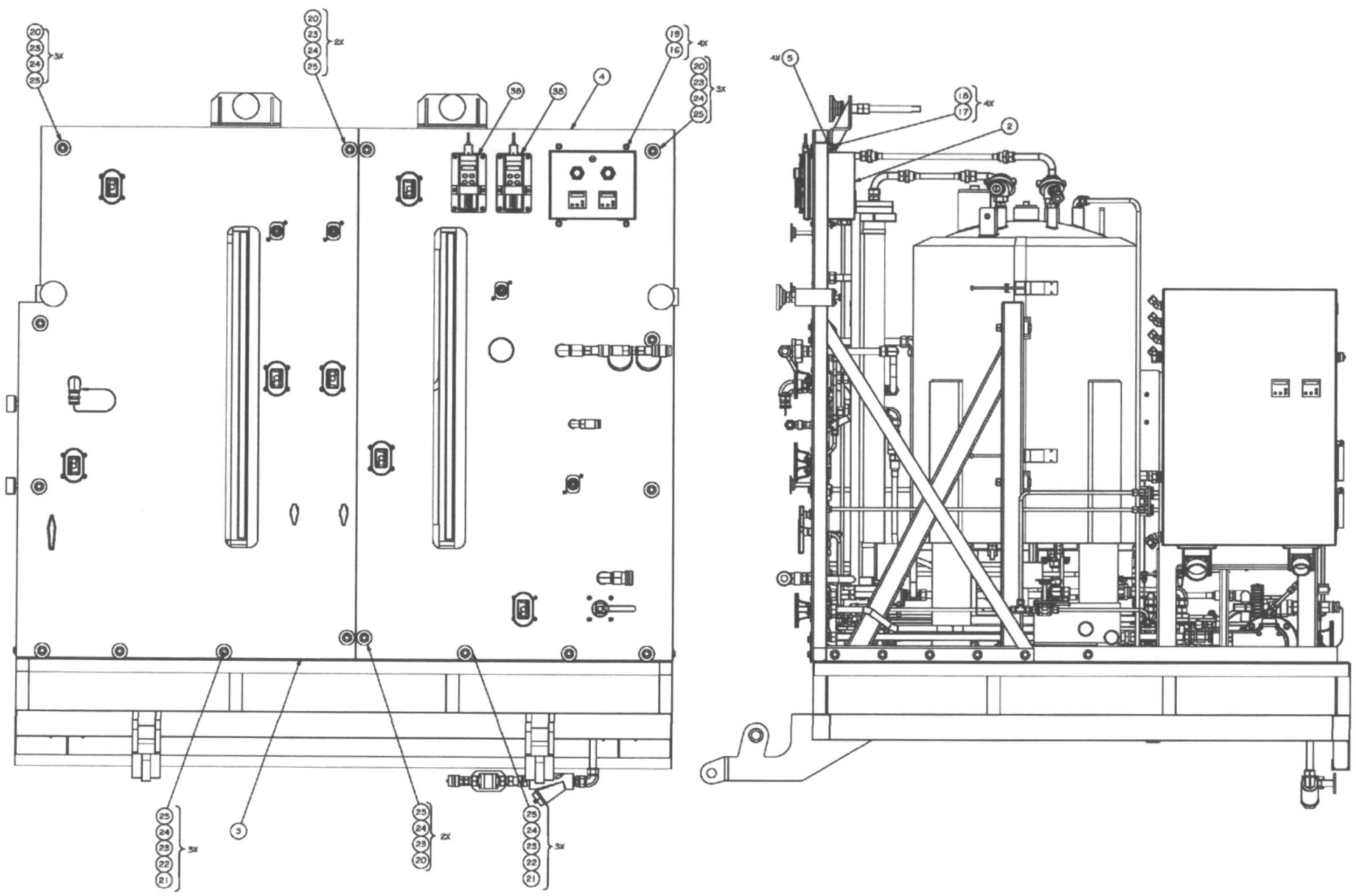

SUBSYSTEM: R55

A69007-P2 SH 1	P2 SERIES	SIZE	CAGE CODE	PROJECT	DRAWING NO.	REV
NEXT ASSY	USED ON	E	14214		A69007-P2	C
APPLICATION		SCALE 1/4	FILE NAME A69007-P2.IDW		SHEET 2 OF 2	

REVISIONS			
REV	DESCRIPTION	DATE	APPROVED

ALABAMA LICENSED PROFESSIONAL ENGINEER JERRY L. BLEVINS

REV STATUS OF SHEETS	REV																			
	SH																			

CONTRACT NUMBER W911SR-12-D-0006	TASK NUMBER D-0019	leidos National Security Sector
UNLESS OTHERWISE SPECIFIED- DIMENSIONS ARE IN INCHES ASME Y14.100M APPLIES	DRAWN 08/26/2014 T. Thompson	CHK 08/26/2014 J. Blevins
TOLERANCES: .XX ±.02 .XXX ±.005 ∠ ±1° 125	TM APVD 08/26/2014 J. Blevins	08/26/2014 J. Blevins
MATERIAL –	APVD –	
FINISH –	APVD –	

TITLE
REAGENT PLATFORM SYSTEM ASSEMBLY

SIZE	CAGE CODE	DWG. NO.	REV
D	0WR61	A69007-P2	C
SCALE NTS		SHEET 2 of 2	

FILE NAME: A69007-P2	
SOFTWARE: –	VERSION: –
–	–
–	–
NEXT ASSY	USED ON

D A69007-P2 REV C

REVISIONS			
REV	DESCRIPTION	DATE	APPROVED

NOTES:

1. APPLY TEFLON TAPE TO ALL PIPE THREADS.
2. MATERIAL: SEE PARTS LIST.
3. APPLY THERMO ADHESIVE (ITEM 23) BETWEEN TANK (ITEM 10) AND HEATERS (ITEM 18) THEN APPLY BEVEL WASHER (ITEM 21) AND ONE HEX NUT (ITEM 20) TO EACH OF THE 8 STUDS (FINGER TIGHTEN). TO INSTALL THE FIRST SET OF HEATER STRAPS (2), REMOVE THE HEX NUTS ON THE FOUR STUDS ON EACH SIDE OF HEATER BOXES AND INSTALL TWO STRAPS ACROSS THE LINE WHERE THE 2 HEATER HALVES INTERSECT. REPLACE THE FOUR HEX NUTS AND TIGHTEN HEX NUTS ON ALL EIGHT STUDS. NEXT INSTALL INSULATION (ITEM 22) OVER HEATERS (ITEM 18) FOLLOWED BY THE BOTTOM SHROUDS (ITEMS 3 & 4). FINGER TIGHTEN ONE NUT ON EACH OF THE EIGHT STUDS. REMOVE THE HEX NUTS ON THE FOUR STUDS ON EACH SIDE OF HEATER BOXES AND INSTALL TWO HEATER STRAPS (ITEM 19) BELOW THE FIRST SET OF STRAPS. REPLACE THE FOUR HEX NUTS (ITEM 20) AND TIGHTEN ALL EIGHT HEX NUTS. ADD ONE ADDITIONAL HEX NUT TO EACH STUD AND TIGHTEN.
4. APPROX. WEIGHT = 505.13 LBS.
5. INSTALL INSULATION (ITEM 22) IN TANK SHROUD (ITEM 2) BEFORE MOUNTING THEM ON TO CHEMICAL TANK.

REVISIONS						
ISSUED BY	LTR	DESCRIPTION	DATE	DAD	CHKD	APPV'D
TVA	A	REVISED PER NOR 2E1-0019-001; 2E1-0023-127	10/29/09	ADM/JEI	SLC	RWK
TVA	B	REVISED PER NOR 2E1-0048-024	09/01/09	ADM	SLC	TSM
TVA	C	REVISED PER NOR 2E1-0084-006	08/01/2011	KJK	SLC	TSM
TVA	D	REVISED PER NOR 2E1-0070-013	11/10/11	EDF	SLC	TSM

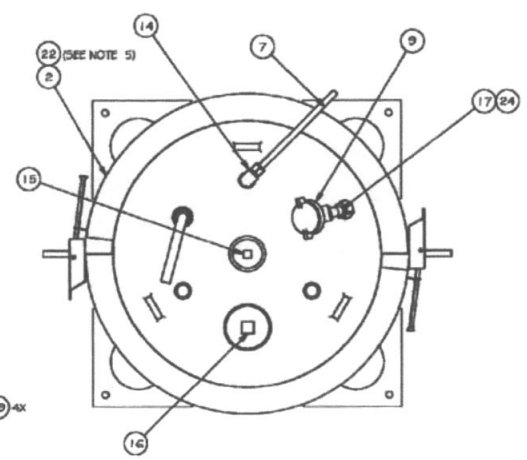

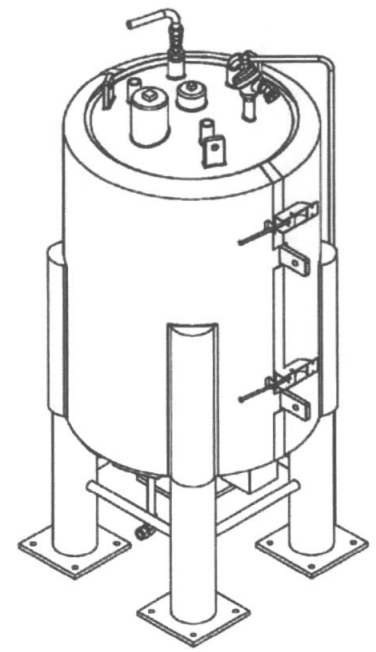

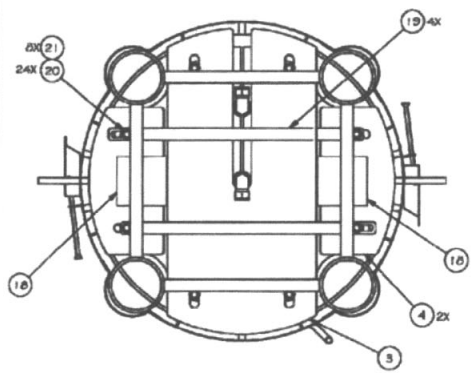

SECTION A-A
SEE NOTE 3 FOR INSTALLATION OF HARDWARE UNDER THE TANK

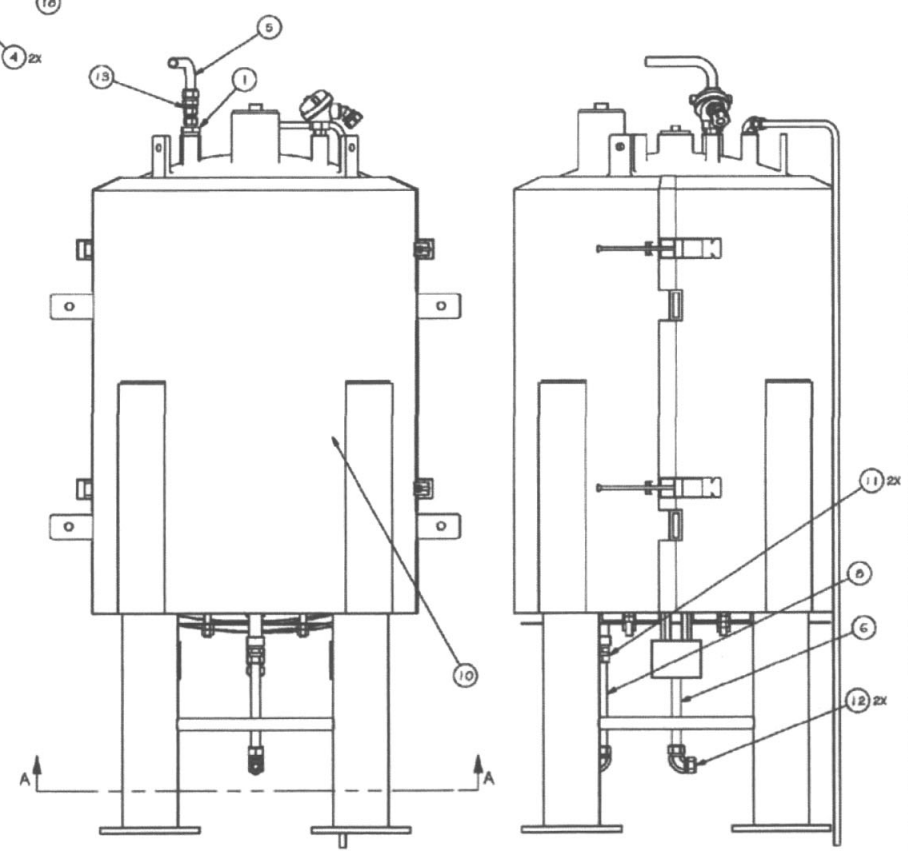

QTY. SHOWN IS FOR 1 ASSEMBLY, 2 ASSEMBLIES REQ'D PER DWG. A69004-P2

ITEM	QTY	PART NUMBER	DESCRIPTION	VENDOR
24	1	5302	SEALING RING, 1/2"	THOMAS & BETTS
23	AR	TRACIT-600A	THERMO BONDING COMPOUND	CHEMAX MANUFACTURING CO.
22	AR	RAM 7475	INSULATION, E-GLASS MAT 1" THK X 60" WIDE X 45' LG., U P TO 1200° F (SEE NOTES 3 & 5)	ALPHA ASSOCIATES
21	8	90845A088	BEVELED WASHER	McMASTER-CARR
20	24		HEX NUT, 1/2" - 13, SST	
19	4	MM0307 1 1-P3	TANK HEATER STRAP (FOR XTRH972 HEATERS)	THERM-X
18	2	XTRH972	65 GAL TANK HEATER	THERM-X
17	1	5842	1/2" LIQUIDTIGHT CONNECTOR, 45 DEGREE ANGLE	THOMAS&BETTS
16	1	1505HP.303304C	3/4" 150 PSI MNPT PIPE PLUG, SQUARE HEAD	GLOBE-PACIFIC
15	1	1502HP.203304C	2" 150 PSI MNPT PIPE PLUG, SQUARE HEAD	GLOBE-PACIFIC
14	1	55-810-2-12	MALE ELBOW, 1/2" TUBE OD X 3/4" MALE NPT	SWAGELOK
13	1	55-1210-6-8	REDUCING UNION, 3/4" X 1/2" TUBE OD	SWAGELOK
12	2	55-1210-9	UNION ELBOW, 3/4" TUBE OD	SWAGELOK
11	2	55-1210-1-12	MALE CONNECTOR, 3/4" TUBE TO 3/4" PIPE	SWAGELOK
10	1	C5001-6151-00	24" O.D. TANK, 65 GALLONS	ALLOY PRODUCTS CORP
9	1	A55108AU330F15	MINCO TC 33", .25 DIA, 1/2" MNPT, SST	MINCO
8	1	A69368-P2	TANK OUTLET 3/4" DIA TUBING #37	
7	1	A69096-P2	TANK VENT 1/2" DIA TUBING #39	
6	1	A69077-P2	TANK INLET 3/4" DIA TUBING #36	
5	1	A69060-P2	TANK SPRAY 3/4" DIA TUBING #38	
4	2	A69519-P2	TANK SHROUD SIDE BOTTOM	
3	1	A69518-P2	TANK SHROUD BOTTOM	
2	1	A69506-P2	CHEMICAL TANK SHROUD ASSEMBLY	
1	1	A69067-P2	TANK SPRAY ASSEMBLY	

Parts List

U.S. ARMY CHEMICAL MATERIALS AGENCY
PROJECT MANAGER FOR NON-STOCKPILE CHEMICAL MATERIEL
EDGEWOOD AREA, ABERDEEN PROVING GROUND, MD

EXPLOSIVE DESTRUCTION SYSTEM
PHASE 2 SERIES

Sandia National Laboratory
Livermore, California

REAGENT PLATFORM ASSEMBLY
TANK ASSEMBLY

CONTRACT NO.	
DRAWN BY: SCHWINGHAMMER	DATE 11/05/2001
CHECKED BY: J. BELLUOMINI	DATE 11/05/2001
APPROVED BY: R. WATSON	DATE 11/05/2001
SIZE E	CAGE CODE 14214
PROJECT	DRAWING NO. A69448-P2
REV. D	
SCALE 1/4	FILE NAME A69448-P2.DWG
SHEET 1 OF 1	

A69004-P2	P2 SERIES
NEXT ASSY	USED ON
APPLICATION	

SUBSYSTEM: R35

ALABAMA LICENSED PROFESSIONAL ENGINEER JERRY L. BLEVINS 32143-E 12/15

REV STATUS OF SHEETS	REV																			
	SH																			

CONTRACT NUMBER W911SR-12-D-0006	TASK NUMBER D-0019		leidos National Security Sector
UNLESS OTHERWISE SPECIFIED- DIMENSIONS ARE IN INCHES ASME Y14.100M APPLIES	DRAWN 08/26/2014 T. Thompson	CHK 08/26/2014 J. Blevins	TITLE REAGENT PLATFORM ASSEMBLY TANK ASSEMBLY
TOLERANCES: .XX ±.02 .XXX ±.005 ∠ ±1° 125	TM APVD 08/26/2014 J. Blevins	08/26/2014 J. Blevins	
MATERIAL –	APVD –		SIZE D / CAGE CODE OWR61 / DWG. NO. A69448-P2 / REV D
FINISH –	APVD –		SCALE NTS / SHEET 1 of 1

FILE NAME: A69448-P2
SOFTWARE: – VERSION: –

–	–
–	–
NEXT ASSY	USED ON

FOLD LINE

D A69448-P2 REV D

REVISIONS			
REV	DESCRIPTION	DATE	APPROVED

NOTES:

1. MATERIAL: SEE PARTS LIST.
2. APPLY TIE-WRAPS (ITEM 14) TO WIRE BUNDLES AS NEEDED.
3. HARDWIRE PER SYSTEM DIAGRAMS A70146-P2, A70051-P2 SH 2, A70040-P2 SH15 1-3, A69666-P2, A69667-P2, A69978-P2, AND A68230-P2.
4. FOR INSTALLATION OF PROCESS CONTROL PANEL TO TRAILER GOOSE NECK FLOOR, SEE SHEET 2; FOR PHASE 2 UNIT 1.

REVISIONS						
ISSUED BY	LTR	DESCRIPTION	DATE	CAD	CHKR	APPVD
TVA	-	PRODUCT BASELINE	07/18/04	DPB	MSP	RWK
TVA	A	REVISED PER NOR 2E1-0018-001; 2E1-0031-012	10/25/06	SLM/JPLZ DPB	SLC	RWK
TVA	B	REVISED PER NOR 2E1-0061-021	05/27/11	KJK	SLC	TBM
TVA	C	REVISED PER NOR 2E1-0073-005	02/02/2012	EDF	SLC	JGB

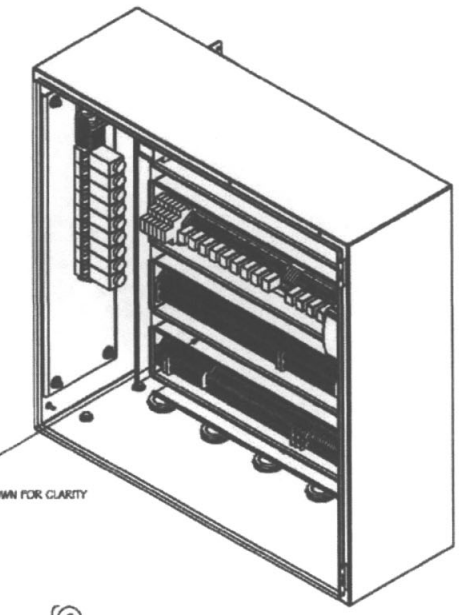

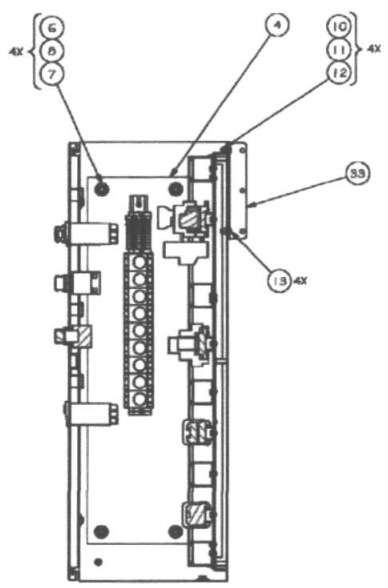

SECTION A-A

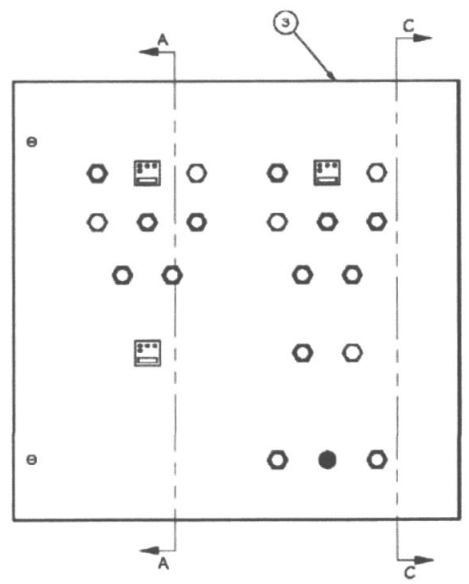

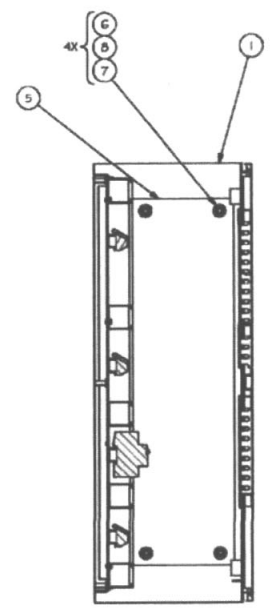

SECTION C-C

QTY. SHOWN IS FOR 1 ASSEMBLY, 1 ASSEMBLY REQ'D PER DWG. A70046

ITEM	QTY	PART NUMBER	DESCRIPTION	VENDOR
39	AR		1 1/2 RUNNING THREAD	
38	12	75138815	1 1/2 CONDUIT SEALING LOCKNUT	McMASTER-CARR
37	6	IB-150	1 1/2 CONDUIT PLASTIC INSULATING BUSHING	GARVIN DIRECT
36	4	92147A031	WASHER, LOCK, 3/8 NOM, SST	McMASTER-CARR
35	4	90107A031	WASHER, FLAT, 3/8 NOM, SST	McMASTER-CARR
34	4	93190A625	SCR, HEX HD, 3/8-16 UNC-2AX 1.50 LG	McMASTER-CARR
33	1	A70112-P2	GUTTER BRACKET	
32	AR	88760	WIRE, 18 AWG 1 PAIR SHIELDED	BELDEN
31	AR	1100-98A	WIRE, 16 AWG TYPE E, ORG, 19 STRANDED	STANDARD WIRE & CABLE
30	AR	1100-98A	WIRE, 16 AWG TYPE E, VIO, 19 STRANDED	STANDARD WIRE & CABLE
29	AR	1100-98A	WIRE, 16 AWG TYPE E, BLU, 19 STRANDED	STANDARD WIRE & CABLE
28	AR	1100-98A	WIRE, 16 AWG TYPE E, GRN, 19 STRANDED	STANDARD WIRE & CABLE
27	AR	1100-98A	WIRE, 16 AWG TYPE E,WHT, 19 STRANDED	STANDARD WIRE & CABLE
26	AR	1100-98A	WIRE, 16 AWG TYPE E, RED, 19 STRANDED	STANDARD WIRE & CABLE
25	AR	WITHIN163	WIRE, 16 AWG THIN, GRN, STRANDED	SUPERIOR ESSEX
24	AR	WITHIN166	WIRE, 16 AWG THIN, ORG, STRANDED	SUPERIOR ESSEX
23	AR	WITHIN162	WIRE, 16 AWG THIN, WHT, STRANDED	SUPERIOR ESSEX
22	AR	WITHIN163	WIRE, 16 AWG THIN, RED, STRANDED	SUPERIOR ESSEX
21	AR	WITHIN161	WIRE, 16 AWG THIN, BLK, STRANDED	SUPERIOR ESSEX
20	AR	WITHIN125	WIRE, 12 AWG THIN, GRN/YEL, STRANDED	SUPERIOR ESSEX
19	AR	WITHIN125	WIRE, 12 AWG THIN, ORN, STRANDED	SUPERIOR ESSEX
18	AR	WITHIN122	WIRE, 12 AWG THIN, WHT, STRANDED	SUPERIOR ESSEX
17	AR	WITHIN124	WIRE, 12 AWG THIN, BLU, STRANDED	SUPERIOR ESSEX
16	AR	WITHIN123	WIRE, 12 AWG THIN, RED, STRANDED	SUPERIOR ESSEX
15	AR	WITHIN121	WIRE, 12 AWG THIN, BLK, STRANDED	SUPERIOR ESSEX
14	AR		TIE-WRAP	
13	4		SCR, HEX HD, 1/4-20 X .625 LG	
12	4		NUT, HEX, 1/4-20, SST	
11	4		LOCK WASHER 1/4"	
10	4		1/4" FLAT WASHER, SST	
9	6		LOCKWASHER, 3/8 SST	
7	6		3/8 FLAT WASHER, SS	
6	6		3/8-16 HEX NUT, SST	
5	1	A70115-P2	CHASSIS PANEL SCP	
4	1	A71081-P2	ALARM SYSTEM ASSEMBLY AND WIRING DIAGRAMS	
3	1	A69797-P2	DOOR ASSEMBLY	
2	1	A72616	CHASSIS ASSEMBLY AND WIRING DIAGRAMS	
1	1	A69795-P2	PANEL FRAME WELDMENT	

Parts List

U.S. ARMY CHEMICAL MATERIALS AGENCY
PROJECT MANAGER FOR NON-STOCKPILE CHEMICAL MATERIEL
EDGEWOOD AREA, ABERDEEN PROVING GROUND, MD

EXPLOSIVE DESTRUCTION SYSTEM
PHASE 2 SERIES

CONTRACT NO.			
DRAWN BY: SCHWINGHAMMER	DATE 11/20/2001	Sandia National Laboratory, Livermore, California	
CHECKED BY: D GOLLING	DATE 05/15/2002	TRAILER ASSEMBLY	
APPROVED BY: R ROMANO	DATE 05/15/2002	PROCESS CONTROL PANEL ASSEMBLY	
SIZE E	CAGE CODE 14214	PROJECT	DRAWING NO. A69794-P2 REV. C
SCALE NONE	FILE NAME A69794-1-P2.IDW	SHEET 1 OF 2	

A70046	P2 SERIES
NEXT ASSY	USED ON
APPLICATION	

SUBSYSTEM: ELC

ALABAMA LICENSED No. 32143-E PROFESSIONAL ENGINEER JERRY L. BLEVINS 12/15/15

REV STATUS OF SHEETS	REV																	
	SH																	

CONTRACT NUMBER W911SR-07-D-0001	TASK NUMBER I-11-CMA-250	leidos National Security Sector	
UNLESS OTHERWISE SPECIFIED– DIMENSIONS ARE IN INCHES ASME Y14.100M APPLIES	DRAWN 02/13/2013 T. Thompson	CHK 02/13/2013 J. Blevins	TITLE TRAILER ASSEMBLY PROCESS CONTROL PANEL ASSEMBLY
TOLERANCES: .XX ±.02 .XXX ±.005 ∠ ±1° 125	TM APVD 02/13/2013 J. Blevins	02/13/2013 J. Blevins	
MATERIAL –	APVD –		SIZE D / CAGE CODE OWR61 / DWG. NO. A69794-P2 / REV C
FINISH –	APVD –		SCALE NTS / SHEET 1 of 2

FILE NAME: A69794-P2-sh1	
SOFTWARE: –	VERSION: –
–	–
–	–
NEXT ASSY	USED ON

FOLD LINE

D A69794-P2 REV C

REVISIONS						
REQUIRED BY	LTR	DESCRIPTION	DATE	CKD	CHKR	APPV'D
TVA	C	SEE SHEET 1	02/02/2012	EDF	SLC	JGB

REVISIONS				
REV	DESCRIPTION	DATE	APPROVED	

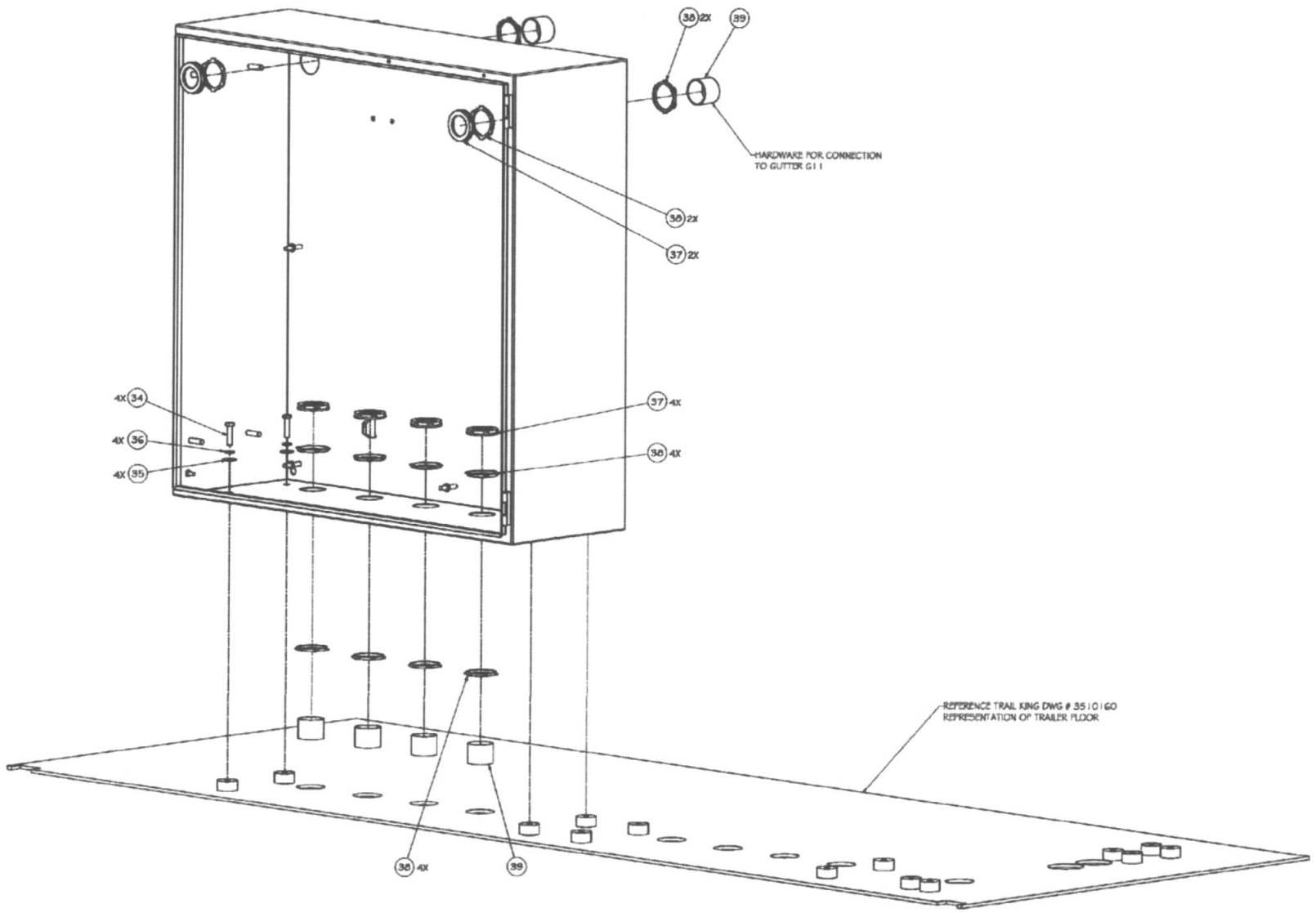

NOTE: ENCLOSURE DOOR REMOVED FOR CLARITY

SUBSYSTEM: FLC

A69794-P2 SH 1	P2 SERIES	SIZE	CAGE CODE	PROJECT	DRAWING NO.	REV.
NEXT ASSY	USED ON	E	14214		A69794-P2	C
APPLICATION		SCALE NONE	FILE NAME A69794-2-P2.IDW		SHEET 2 OF 2	

ALABAMA LICENSED No. 32148-E PROFESSIONAL ENGINEER JERRY L. BLEVINS

12/15/15

REV STATUS OF SHEETS	REV																			
	SH																			

CONTRACT NUMBER W911SR-12-D-0006	TASK NUMBER D-0019	leidos National Security Sector 2400-A Bee AB Corporate Center Dr. Arlington, AB 22206	
UNLESS OTHERWISE SPECIFIED- DIMENSIONS ARE IN INCHES ASME Y14.100M APPLIES TOLERANCES: .XX ±.02 .XXX ±.005 ∠ ±1° 125	DRAWN 08/26/2014 T. Thompson / CHK 08/26/2014 J. Blevins / TM APVD 08/26/2014 J. Blevins / 08/26/2014 J. Blevins	TITLE TRAILER ASSEMBLY PROCESS CONTROL PANEL ASSEMBLY	
MATERIAL — / FINISH —	APVD — / APVD —	SIZE D / CAGE CODE OWR61 / DWG. NO. A69794-P2	REV C
		SCALE NTS	SHEET 2 of 2

FILE NAME: A69794-sh1	
SOFTWARE: —	VERSION: —
—	—
—	—
NEXT ASSY	USED ON

D A69794-P2 REV C

REVISIONS			
REV	DESCRIPTION	DATE	APPROVED

NOTES:

1. DIMENSIONING AND TOLERANCING PER ASME Y 14.5-1994.
2. MATERIAL: SEE PARTS LIST.
3. LABELS SHOWN ON THIS DRAWING IS BY: 1/4 (1230) HIGH BLACK CHARACTERS AND LOCATED APPROXIMATELY WHERE SHOWN.
4. ALTERNATE LED PART # 1842G131 (RED). EST OPTICAL.
5. ALTERNATE LED PART # MLD-DRG 1208 (GREEN.) MICROLAMP.
6. ALTERNATE LED PART # MLD-YYL1203 (YELLOW) MICROLAMP.
7. REMOVE CONTACT ON ITEM 3. FOR BOTTON SET ON PANEL AND REPLACE WITH NEW CONTACT, TEM 16.

REVISED BY	LTR	DESCRIPTION	DATE	CAD	DWN	APVD
TVA	C	REVISED PER ECR 2E1-0388-12	08/01/09	EDF	BLC	TEM
TVA	D	REVISED PCR A OR 2E2-3064-003	08/01/11	[illegible]	BLC	TEM
TVA	E	REVISED PER A OR 2E1-3073-004	10/20/09	[illegible]	BLC	JEB
TVA	F	REVISED PER ECR 2E1-0388-002	05/06/14	LEH	ZWB	KMT

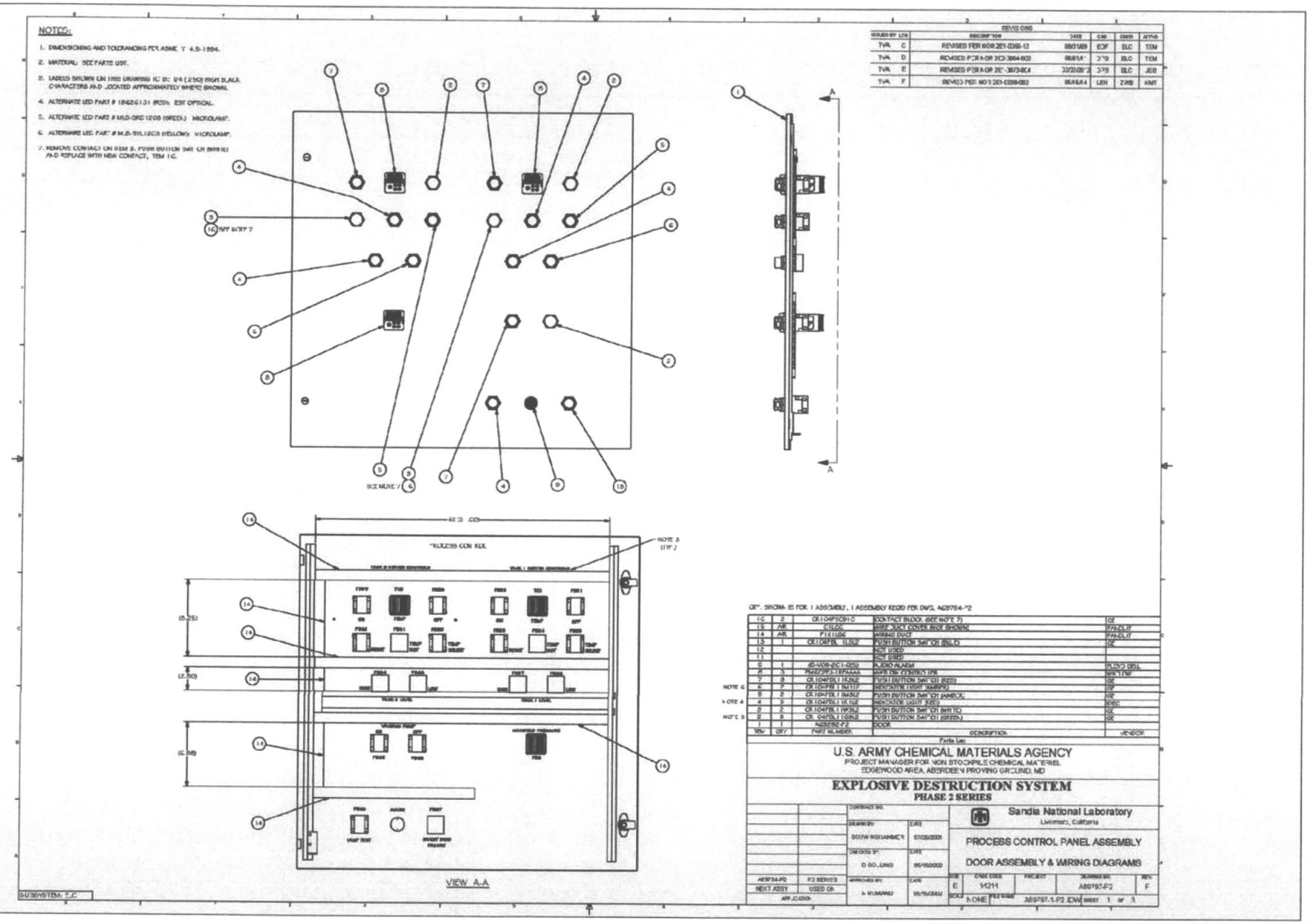

QTY. SHOWN IS FOR 1 ASSEMBLY, 1 ASSEMBLY REQD FOR DWG. A69794-P2

10	2	CE1CMPSCB110	CONTACT BLOCK (SEE NOTE 7)	GE
15	AR	CJ1A5C	WIRE JACK COVER BOX BROWN	PANELIT
14	AR	P1E1UBE	WIRING duct	PANELIT
13	1	CE1D2FBL 11J3L2	PUSH BUTTON 3ø "O" (BLUE)	GE
12			NOT USED	
11			NOT USED	
5	1	45-V08-2C1-0250	AUDIO ALARM	TUCO BELL
16	3	PM22SPM3-1EPAAA	AMPLTBL (2E3-3767) SPK	NEWTRON
7	3	CE1D4FBL11N3L2	PUSH BUTTON 3ø1 "O1 (RED)	GE
6	7	CE1D1FBL 1 3N1TF	INDICATOR (1SET 3ø4RPM)	GE
8	2	CE1D4FBL1 0M3L2	PUSH BUTTON 3ø1 "O1 (AMBER)	GE
4	3	CE1D4FBL1 1E1L2	INDICATOR LIGHT (RED)	GEC
3	2	CE1D4FBL1 1W3L2	PUSH BUTTON 3ø1 "O1 (WHITE)	GE
2	3	CE1D4FBL1 1G3L2	PUSH BUTTON 3ø1 "O1 (GREEN)	GE
1	1	A69797-P2	DOOR	
REV	QTY	PART NUMBER	DESCRIPTION	VENDOR

Parts List

U.S. ARMY CHEMICAL MATERIALS AGENCY
PROJECT MANAGER FOR NON STOCKPILE CHEMICAL MATERIEL
EDGEWOOD AREA, ABERDEEN PROVING GROUND, MD

EXPLOSIVE DESTRUCTION SYSTEM
PHASE 2 SERIES

CONTRACT NO.			
DRAWN BY: DOTW INGRAMME'S	DATE 07/25/2001	Sandia National Laboratory Livermore, California	
CHECKED BY: D. GO_LING	DATE 05/15/2002	PROCESS CONTROL PANEL ASSEMBLY	
APPROVED BY: H. MUNARD	DATE 05/15/2002	DOOR ASSEMBLY & WIRING DIAGRAMS	
A69794-P2 / P2 SERIES	SIZE E	CAGE CODE 14214	PROJECT
NEXT ASSY / USED ON	SCALE NONE	FILE NAME A69797-1-P2.JDW	SHEET 1 of 3
APPLICATION			

DRAWING NO. A69797-P2 REV. F

ALABAMA LICENSED PROFESSIONAL ENGINEER JERRY L. BLEVINS No. 19143-E 12/10/15

REV STATUS OF SHEETS	REV																	
	SH																	

CONTRACT NUMBER W911SR-12-D-0006	TASK NUMBER D-0019	leidos National Security Sector 2400-A Bay Hill Corporate Center Drive Abingdon, MD 21009	
UNLESS OTHERWISE SPECIFIED- DIMENSIONS ARE IN INCHES ASME Y14.100M APPLIES	DRAWN 08/26/2014 T. Thompson	CHK 08/26/2014 J. Blevins	TITLE PROCESS CONTROL PANEL ASSEMBLY DOOR ASSEMBLY & WIRING DIAGRAMS
TOLERANCES: .XX ±.02 .XXX ±.005 ∠ ±1° 125	TM APVD 08/26/2014 J. Blevins	TM APVD 08/26/2014 J. Blevins	
MATERIAL —	APVD —		SIZE D / CAGE CODE OWR61 / DWG. NO. A69797-P2 / REV F
FINISH —	APVD —		SCALE NTS / SHEET 1 of 3

FILE NAME: A69797-P2	
SOFTWARE:	VERSION: —
—	—
—	—
NEXT ASSY	USED ON

FOLD LINE

D A69797-P2 REV F

REVISIONS			
REV	DESCRIPTION	DATE	APPROVED

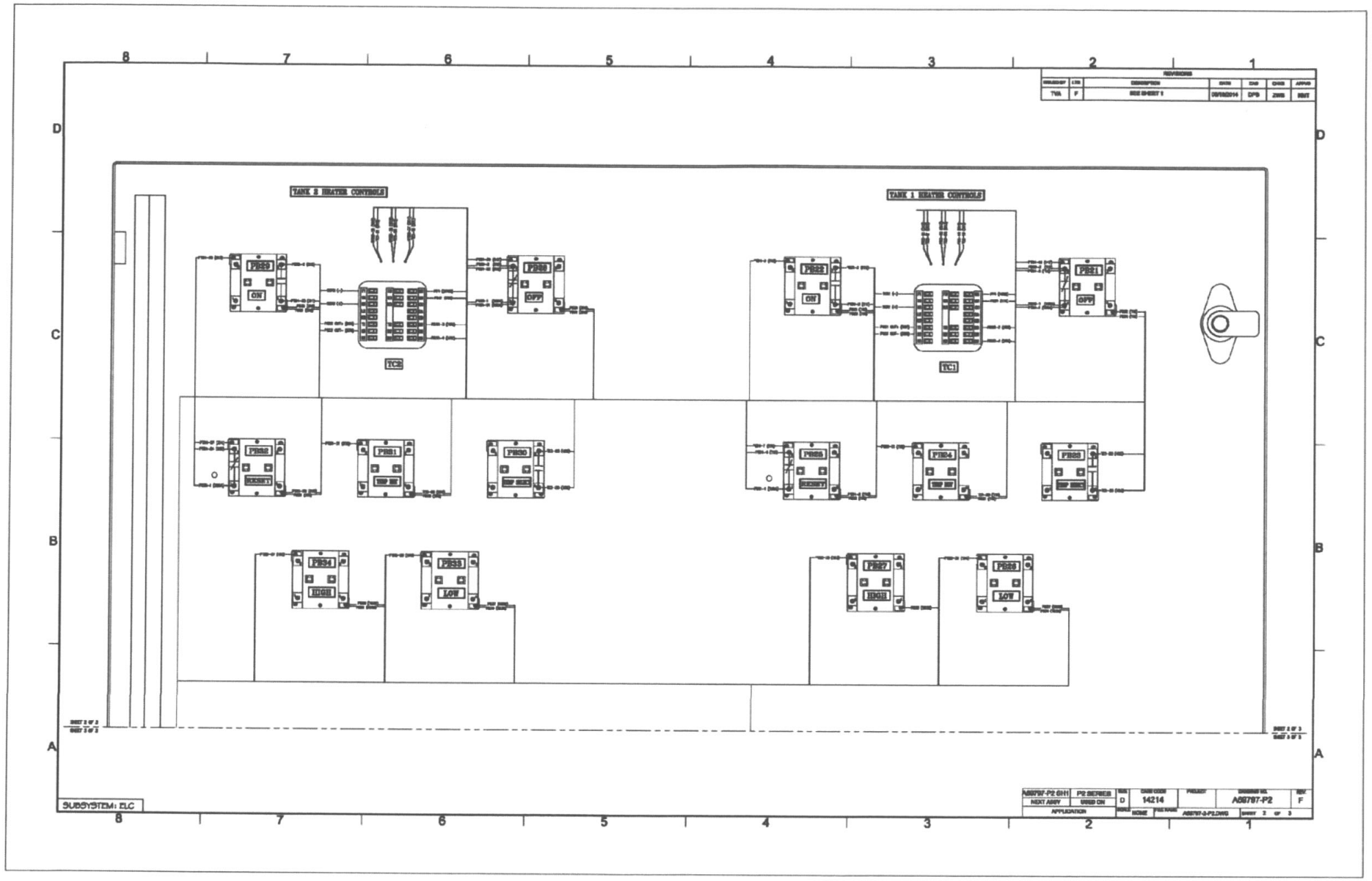

REV STATUS OF SHEETS	REV																	
	SH																	

CONTRACT NUMBER W911SR-12-D-0006	TASK NUMBER D-0019	leidos National Security Sector
UNLESS OTHERWISE SPECIFIED- DIMENSIONS ARE IN INCHES ASME Y14.100M APPLIES TOLERANCES: .XX ±.02 .XXX ±.005 ∠ ±1° 125	DRAWN 08/26/2014 T. Thompson / CHK 08/26/2014 J. Blevins / TM 08/26/2014 J. Blevins / APVD 08/26/2014 J. Blevins	TITLE PROCESS CONTROL PANEL ASSEMBLY DOOR ASSEMBLY & WIRING DIAGRAMS
MATERIAL —	APVD —	SIZE D / CAGE CODE 0WR61 / DWG. NO. A69797-P2 / REV F
FINISH —	APVD —	SCALE NTS / SHEET 2 of 3

FILE NAME: A69797-P2
SOFTWARE: VERSION: —

NEXT ASSY	USED ON
—	—
—	—

ALABAMA LICENSED No. 32143-E PROFESSIONAL ENGINEER JERRY L. BLEVINS

D A69797-P2 REV F

REVISIONS			
REV	DESCRIPTION	DATE	APPROVED

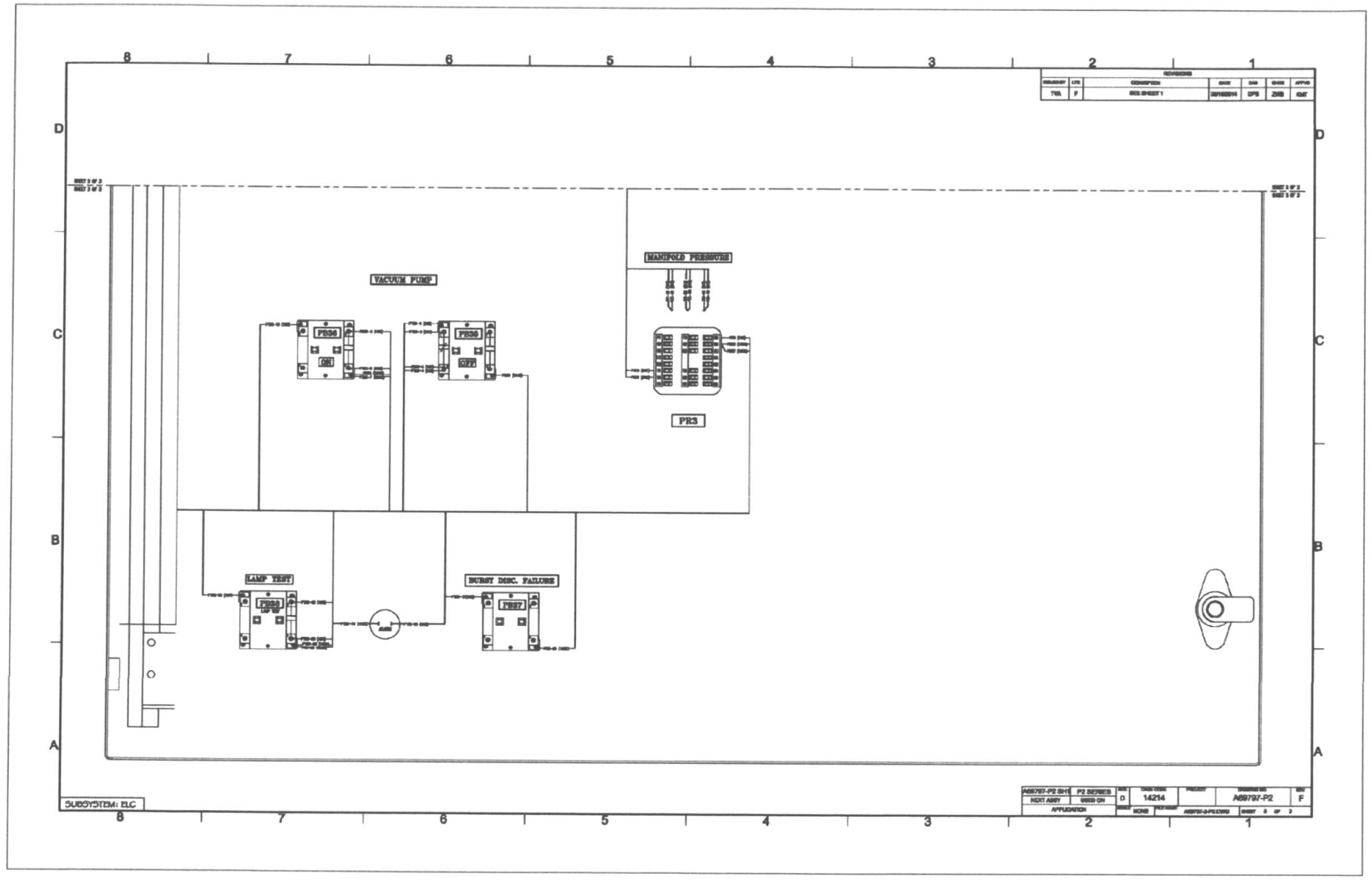

REV STATUS OF SHEETS	REV																		
	SH																		

CONTRACT NUMBER W911SR-12-D-0006	TASK NUMBER D-0019	leidos National Security Sector 2400-A Bee Hill Corporate Center Drive Arlington, MD 21209
UNLESS OTHERWISE SPECIFIED- DIMENSIONS ARE IN INCHES ASME Y14.100M APPLIES	DRAWN 08/26/2014 T. Thompson / CHK 08/26/2014 J. Blevins	TITLE PROCESS CONTROL PANEL ASSEMBLY DOOR ASSEMBLY & WIRING DIAGRAMS
TOLERANCES: .XX ±.02 .XXX ±.005 ∠ ±1° 125	TM APVD 08/26/2014 J. Blevins / 08/26/2014 J. Blevins	
MATERIAL —	APVD —	SIZE D / CAGE CODE 0WR61 / DWG. NO. A69797-P2 / REV F
FINISH —	APVD —	SCALE NTS / SHEET 3 of 3

FILE NAME: A69797-P2	
SOFTWARE:	VERSION: —
—	—
—	—
NEXT ASSY	USED ON

FOLD LINE

D A69797-P2 REV F

ALABAMA LICENSED PROFESSIONAL ENGINEER JERRY L. BLEVINS

Parts List

ITEM	QTY	PART NUMBER	DESCRIPTION	VENDOR
* 73	1	A70172-P2	1/2F - 3/2M QUICK CONNECT ADAPTER	
* 72	1	A70171-P2	1/2M - 3/8F QUICK CONNECT ADAPTER	
* 71	1	AG9043-P2	QUICK CONNECT ADAPTER	
70	1	A73840	DECK SPRAY MANIFOLD ASSEMBLY	
69	1	A72025	ELECTRICAL COMPONENT ASSEMBLY (NOT SHOWN)	
* 68	1	A70728-P2	OPTIONAL ELECTRIC PUMP 1 TEE ASSEMBLY	
* 67	1	A70727-P2	OPTIONAL PRESSURE GAGE ASSEMBLY	
* 66	1	A70726-P2	ELECTRIC SUPPLY PUMP HOSE ASSEMBLY	
* 65	1	A70725-P2	ELECTRIC SOURCE PUMP HOSE ASSEMBLY	
64	2	A70169	BEARING CARRIER DRIVE BRACKET	
63	AR		3/4" SS TUBING	
* 62	2	9768	HYDRAULIC HOSE (SEE NOTE 6)	POWER TEAM
61			NOT USED	
60	1	A74425	CONTROL PANEL WIREWAY	
59	1	F-66W2498	6 X 24 WIREWAY	HOFFMAN
58		24C01	REAGENT PLATFORM MAIN ASSEMBLY (REF. DWG ONLY)	
* 57		A70050-P2	ELECTRIC PUMP CART ASSEMBLY (NOT SHOWN)	
56	18		1-8 X 2.75 LNG GR 8 BOLT	
55	18		WASHER, FLAT, 1"	
54	18		1" LOCKWASHER, SS	
53	8		SCR, HEX HD, 1/2-13 UNC X 1" LG, SST	
52			NOT USED	
51	6		SCR, SOC HD CAP, 3/8-16 UNC X 1" LG, SST	
50	34		3/8 SPLIT LOCKWASHER, SS	
49			NOT USED	
48	30		LOCK WASHER, 1/4", SST	
47	3		SOC HD SCREW, 1/4-20 UNC-2A X 1.75 LG	
46	12		1/4" FLAT WASHER	
45	1	4 S x 101.750"	4" DIA. SHAFT, CLASS S WITH 3/4-10 x 1" DEEP CO-AXIAL HOLES AT EACH END TO SECURE FOR THIN DENSE CHROME PLATING	LINEAR INDUSTRIES
44		NOT USED		
43		NOT USED		
42	1	204951	ACME SCREW ASSEMBLY	LINEAR INDUSTRIES
41	11		SCR, SOC HD, 1/4-28 x 3/4" LG, SS	
40	4		SCR, HEX HD, 1/4-20 x 3/8" LG, SS	
39	1	A71695	CASTER SHIELD - PS	
38	1	AG9801-P2	HEATERS POWER PANEL ASSEMBLY	
37	1	AG9798-P2	DRIVE POWER PANEL ASSEMBLY	
36	1	A71694	CASTER SHIELD - DS	
35	1	A74424	TRAILER LABELS	
34	2	A70733	CLAMP HANGER ROD END CAP	
33	2	A70730	CLAMP HANGER SPACER LEFT SIDE	
32	1	A73820	200 AMP MAIN DISCONNECT SWITCH ASSEMBLY	
31	4		HEX NUT, 3/8-16, SS	
30	4		SCR, SOCKET HEAD CAP 3/8-16 UNC x 2 1/4" LG, SS	
29	1	A70178	OUTBOARD CLAMP ROD HANGER LEFT SIDE	
28	1	A70156	CLAMP DRIVE SCREW MOTOR MOUNT	
27	2	A70159	CLAMP ROD CAP	
26	1	A72546	CLAMP ROD SUPPORT, LEFT SIDE	
25	1	A68157	OUTBOARD CLAMP ROD HANGER RIGHT SIDE	
24		NOT USED		
23	4		SCR, HEX HD, 3/8-16 x 1 1/4" LG, SS	
22	1	AG9262-P2 (P2 U1 ONLY)	P-30C HYDRAULIC NUT PUMP BOX WITH PUMP ASSEMBLY	
21	1	A71112	HEAT SENSOR MOUNTING ASSEMBLY	
20	1	AG9993-P2	TOOL BOX ASSEMBLY	
19	1	A71960	V-202 VESSEL CONTROL PANEL ASSEMBLY	
18	1	A70735	UTILITY PANEL ASSEMBLY	
17	1	AG9794-P2	PROCESS CONTROL PANEL ASSEMBLY	
16	1	A71708	LEAK DETECTOR MANIFOLD	
15	1	A70151	DRIVE MOTOR AND MOUNT ASSEMBLY	
14	1	AG7256	V-202 VESSEL ASSEMBLY	
13	1	A71089	ENCODER ASSEMBLY	
12	2	A71050 (P2 U1 ONLY)	POWER CONDITIONER ENCLOSURE ASSEMBLY (SEE NOTE 7)	
11	1	A71128	HOSE GUIDE PLATE ASSEMBLY	
10	1	A71141	HOSE CLIP GLIDE BAR ASSEMBLY	
9	1	A70143-P2	UPPER DECK WIREWAY	
8	1	A76132	STATIONARY HANDRAIL MODIFICATION	
7	1	AG9083-P2 (P2 U1 ONLY)	LEAK DETECTOR ASSEMBLY	
6	1	A76456	PROXIMITY SWITCH BOX ASSEMBLY	
5	1	AG9007-P2	REAGENT PLATFORM ASSEMBLY	
4	1	AG9463-P2	60 AMP CONNECTOR ASSEMBLY	
3	2	AG7266	CLAMP HANGER ASSEMBLY	
2	1	AG8563	CASTER MOUNT ASSEMBLY	
1	1	TK 70 PS	40' SINGLE DROP 5TH WHEEL TRAILER (VENDOR DRAWING 3510221)	TRAIL KING

ITEM	QTY	PART NUMBER	DESCRIPTION	VENDOR	
148	1	2012-05C	REBUILD KIT FOR LEAD SCREW ASSEMBLY - 204951	LINEAR INDUSTRIES	NOTE 11
147	2	2014-16	REAR HYDRAULIC STABILIZING LEG, 16,000 LB., 16" STROKE	POWER-PACKER	NOTE 10
146	2	2012-25	FRONT HYDRAULIC STABILIZING LEG, 16,000 LB., 25" STROKE	POWER-PACKER	NOTE 10
145	1	GD16	GROUND JOINT FEMALE SPUD 1-1/4"	DIXON VALVE	
144	1	730-037-001	KING PIN REPLACEABLE 2"	TRAIL KING	
143	1	A76455	DISTRIBUTION PANEL GROUNDING (NOT SHOWN)		
142		NOT USED			
141	6		SCR, SOC HD CAP, 10-24 UNC X .75 LG, SS		
140	1	G4-11GB2C-9725	GEARHEAD, NEMA RUE, TRUE PLANETARY, MODEL NO. NT34-003, 3:1 RATIO	THOMSON MICRON	
139	1	A74464	JIB-CRANE LIFT ASSIST ASSEMBLY (NOT SHOWN)		
138	4		3/8" FLAT WASHER, SS		
137	1	A77260	TRAILER SUMP DRAIN ASSEMBLY		
136	AR	99CC3M453	SCR, SELF-TAPPING, #14 x 1" LG, 316 SS	McMASTER-CARR	
* 135	AR	97507T11	RIGID METAL STRAP	McMASTER-CARR	
* 134	4	9600	HYDRAULIC COUPLER DUST CAP (SEE NOTE 6)	POWER TEAM	
133	4	9793	MALE HALF QUICK COUPLER (HOSE) (SEE NOTE 6)	POWER TEAM	
132	1		SET SCREW, 10-32 X 3/8" LG, SST		
131	1		WOODRUFF KEY, 3/16" X 5/8", SST		
130	4		SCR, SOC HD CAP, 3/8-16 UNC X 1 1/4" LG, SST		
129	6		SCR, SOC HD CAP, 3/8-16 UNC X 1 1/2" LG, SST		
128	8		1/2" LOCKWASHER, SS		
127	5		HEX JAM NUT, 1/2-13 x 5/16" THICK		
126	5		HEX HD BOLT, 1/2-13 x 2 1/2" LG, SS		
125	4	9654K922	EXTENSION SPRING, 5 1/2"	McMASTER-CARR	
124	2		7/8" FLAT WASHER, SS		
123	2		7/8" LOCK WASHER, SS		
122	2		7/8-9 UNC 2B x 3 1/4" LG, HEX HD BOLT, SS		
121	1	A76452	TRANSITION BOX RECEPTACLE MOUNTING PLATE		
** 120	1	AG9399-P2	HOSE ASSEMBLY (NOT SHOWN)		
** 119	1	A70064	AIR SUPPLY HOSE ASSEMBLY (NOT SHOWN)		
118	1	RMT093F14	CLAMP DRIVE MOTOR	SUPERIOR ELECTRIC	
* 117	1	A74427	PEGBOARD ASSEMBLY		
116	6		5/8" LOCK WASHER, SS		
115	6		5/8-11 x 1" LG, HEX HD BOLT SS		
114	3	92G65A526	GRADE 5 ZINC-PLATED STEEL HEX HEAD CAP SCREW 1"-14 THREAD, 4" LG, FULLY THREADED	McMASTER-CARR	
113	12		SCR, HEX HD, 1/4-20 X 1/2" LG, SS		
112	1	A73610	TRANSITION BOX ASSEMBLY	TRAIL KING	
111	2	A71118	CLAMP HANGER ADJUSTMENT ROD (NOT SHOWN)		
110	1	A72C12-P2	VESSEL EFFLUENT HOSE ASSEMBLY (NOT SHOWN)		
109	1	AG7190	TRAILER MODIFICATION (NOT SHOWN -REFERENCE ONLY)		
108	1	A72G43	CONDUIT & GUTTER RUN ID PLAN VIEW (NOT SHOWN)		
107	1	A7016G-P2	DP4 BOX MODIFICATION & WIRING DIAGRAM		
106	1	A70165-P2	DP3 BOX MODIFICATION & WIRING DIAGRAM		
105	1	A70164-P2	DP2 BOX MODIFICATION & WIRING DIAGRAM		
104	1	A70163-P2	DP1 BOX MODIFICATION & WIRING DIAGRAM		
103	1	A74376	CLAMP DRIVE MOTOR CABLE ASSEMBLY		
** 102	1	AG5593-P2	REAGENT SUPPLY HOSE ASSEMBLY (NOT SHOWN)		
101	1	A74351	BATTERY CHARGER LAYOUT WIRING DIAGRAM (NOT SHOWN)		
100	2	A73754	POWER CONDITIONER ENCLOSURE ASSEMBLY		
99	6		5/8" FLAT WASHER, SS		
98	2		SCR, SOC HD CAP, 3/8-16 UNC 1 1/4" LG, SST		
97	1	A71663	CLAMP PARKED PROXIMITY SENSOR ASSEMBLY		
96	1	A71664	CLAMP CLOSED PROXIMITY SENSOR ASSEMBLY		
95	1	A74404	P-30C HYDRAULIC NUT PUMP BOX WITH PUMP ASSEMBLY		
94	1	A74400	LEAK DETECTOR ASSEMBLY		
93	4	AG9507-P2	LIGHT HOLDER ADAPTER		
92	4	AG9469-P2	LIGHT HOLDER ASSEMBLY		
91	1	A7C459	LEAD SCREW HAND WHEEL		
90	6		SCR, HEX HD, 3/8-16 x 3/4" LG, SS		
* 89	1	A73760	HOSE DOCKING STATION ASSEMBLY		
* 88	1		1/2 SQUARE DRIVE, SLIDING T-HANDLE SOCKET WRENCH		
* 87	1		1/2 DRIVE EXTENSION		
* 86	1		1 5/16 STANDARD 6-PT SOCKET, 1/2 DRIVE, SST		
* 85	1		5/16 T-HANDLE HEX KEY, SST		
* 84	1	31360	STRAP WRENCH, RIGID TOOL MODEL 5	RIGID TOOLS	
* 83	1	QC2F75	30 FT-LB TORQUE WRENCH W/QD12A-60 RATCHET SQ. DR. HD	SNAP-ON	
* 82	1		TELESCOPING MAGNETIC RETRIEVER		
* 81	1	5C01A14	SPRING RETRACTABLE RETRIEVING TOOL	McMASTER-CARR	
* 80	1		5/8 COMBINATION WRENCH		
* 79	1		3/4 COMBINATION WRENCH		
* 78	1		1 7/8 COMBINATION WRENCH		
* 77	1	AG6506-P2	HYDRAULIC SPANNER WRENCH		
76	1	AG9430-P2	SAFETY SPLIT RING SUPPORT		
75	16		WASHER, PLAIN, 3/8", SS		
* 74	1	A70173-P2	1/2F - 3/8F QUICK CONNECT ADAPTER		

REVISIONS

REVISED BY	LTR	DESCRIPTION	DATE	CAD	CHKR	APPVD
TVA	D	REVISED PER NOR 7F1-0048-001	08/01/09	DPB/EDF	SLC	TSM
TVA	E	REVISED PER NOR 2E1-0064-002	11/09/09	KJK	SLC	TMM
TVA	F	REVISED PER NOR 2E1-0069-003	11/10/11	LBH	SLC	TSM
TVA	G	REVISED PER NOR 7F1-0107-001	10/09/13	EDF	DPB	KMF
TVA	H	REVISED PER NOR 2E1-0079-001	02/21/14	EDF	ZWB	KMF
TVA	I	REVISED PER NOR 2E1-0061-032	7/7/15	TMA	SLC	KMF

NOTES:
1. DIMENSIONING AND TOLERANCING PER ASME Y14.5-1994.
2. MATERIAL: SEE PARTS LIST
3. THE TRAILER IS A CUSTOM ASSEMBLY SUPPLIED BY TRAIL KING INDUSTRIES, MITCHELL, SD, AND IN ADDITION TO THE BASIC TRAILER, INCLUDED ARE THESE SPECIAL ITEMS: RAILINGS, STAIRS, FOLD-OUT REAGENT PLATFORM, HYDRAULICS FOR LEVELING LEGS AND REAGENT SUPPLY PLATFORM, SECONDARY CONTAINMENT FOR PROCESS AREA AND REAGENT SUPPLY PLATFORM, CUSTOM ELECTRICAL CONDUIT RUNS AND PNEUMATIC DISTRIBUTION PIPING.
4. USER TO DETERMINE LOCATION FOR ITEM 92, LIGHT HOLDER ASSEMBLY, AND ITEM 93, LIGHT HOLDER ADAPTER.
5. SLIP RING LOCKING BOLT TO BE SHIMMED AS REQUIRED TO INSURE A SECURE FIT.
6. ITEMS 133 & 134 ARE TO BE USED WITH ITEM 62 AS NEEDED.
7. POWER CONDITIONERS ON P2-U1 HAVE BEEN DISCONTINUED. USE ITEM 100 FOR FUTURE INSTALLATIONS.
8. USE ITEM 93 TO MOUNT LIGHT HOLDER IN ANY LOCATION WHERE THE HANDRAIL HAS BEEN REMOVED.
9. KING PIN 730-037-000 KING PIN 3" MAY BE NEEDED DEPENDING ON MODEL AND YEAR OF TRACTOR MANUFACTURER.
10. SUPPLIED BY TRAIL KING - COMES WITH TRAILER.
11. THIS ITEM IS FOR REFURBISHMENT OF THE LEAD SCREW ASSEMBLY. (ITEM 42)

QTY. SHOWN IS FOR 1 ASSEMBLY, 1 ASSEMBLY REQD PER DWG. A71700.
* THIS ITEM STORED IN UTILITY SUPPORT TRAILER UNTIL NEEDED.
** SEE REF. DRAWING 24001 FOR COMPONENT LOCATION.

SUBSYSTEM: TLA

U.S. ARMY CHEMICAL MATERIALS AGENCY
PROJECT MANAGER FOR NON-STOCKPILE CHEMICAL MATERIEL
EDGEWOOD AREA, ABERDEEN PROVING GROUND, MD

EXPLOSIVE DESTRUCTION SYSTEM
PHASE 2 SERIES

Sandia National Laboratory
Livermore, California

SYSTEM ASSEMBLY
TRAILER ASSEMBLY

DRAWN BY	C. STOKES	DATE	12/11/2002
CHECKED BY	J. BELLUOMINI	DATE	12/19/2002
APPROVED BY	J. DIDLAKE	DATE	12/19/2002
SIZE D	CAGE CODE 14214	DRAWING NO. A70046	REV I
SCALE N/A	FILE NAME A70046-1.IDW	SHEET 1 OF 5	
A71700	72 SERIES		
NEXT ASSY	USED ON		
APPLICATION			

ALABAMA LICENSED PROFESSIONAL ENGINEER No. 32143-E JERRY L. BLEVINS

FILE NAME: A70046-sh1		SOFTWARE: –	VERSION: –
NEXT ASSY		USED ON	
–		–	
–		–	

REV STATUS OF SHEETS	REV / SH
CONTRACT NUMBER	W911SR-12-D-0006
TASK NUMBER	D-0019
UNLESS OTHERWISE SPECIFIED– DIMENSIONS ARE IN INCHES ASME Y14.100M APPLIES TOLERANCES: .XX ±.02 .XXX ±.005 ±1° 125	DRAWN 08/26/2014 T. Thompson; CHK 08/26/2014 J. Blevins
MATERIAL –	APVD 08/26/2014 J. Blevins; TM APVD 08/26/2014 J. Blevins
FINISH –	APVD –

leidos National Security Sector

TITLE: SYSTEM ASSEMBLY TRAILER ASSEMBLY

SIZE	CAGE CODE	DWG. NO.	REV
D	0WR61	A70046	I
SCALE NTS		SHEET 1 of 5	

D A70046 REV I

REVISIONS				
REV	DESCRIPTION	DATE	APPROVED	

REVISIONS						
ISSUED BY	LTR	DESCRIPTION	DATE	CAD	CHKR	APP'VD
TVA	1	SEE SHEET 1	7/7/15	TMA	SLC	KMT

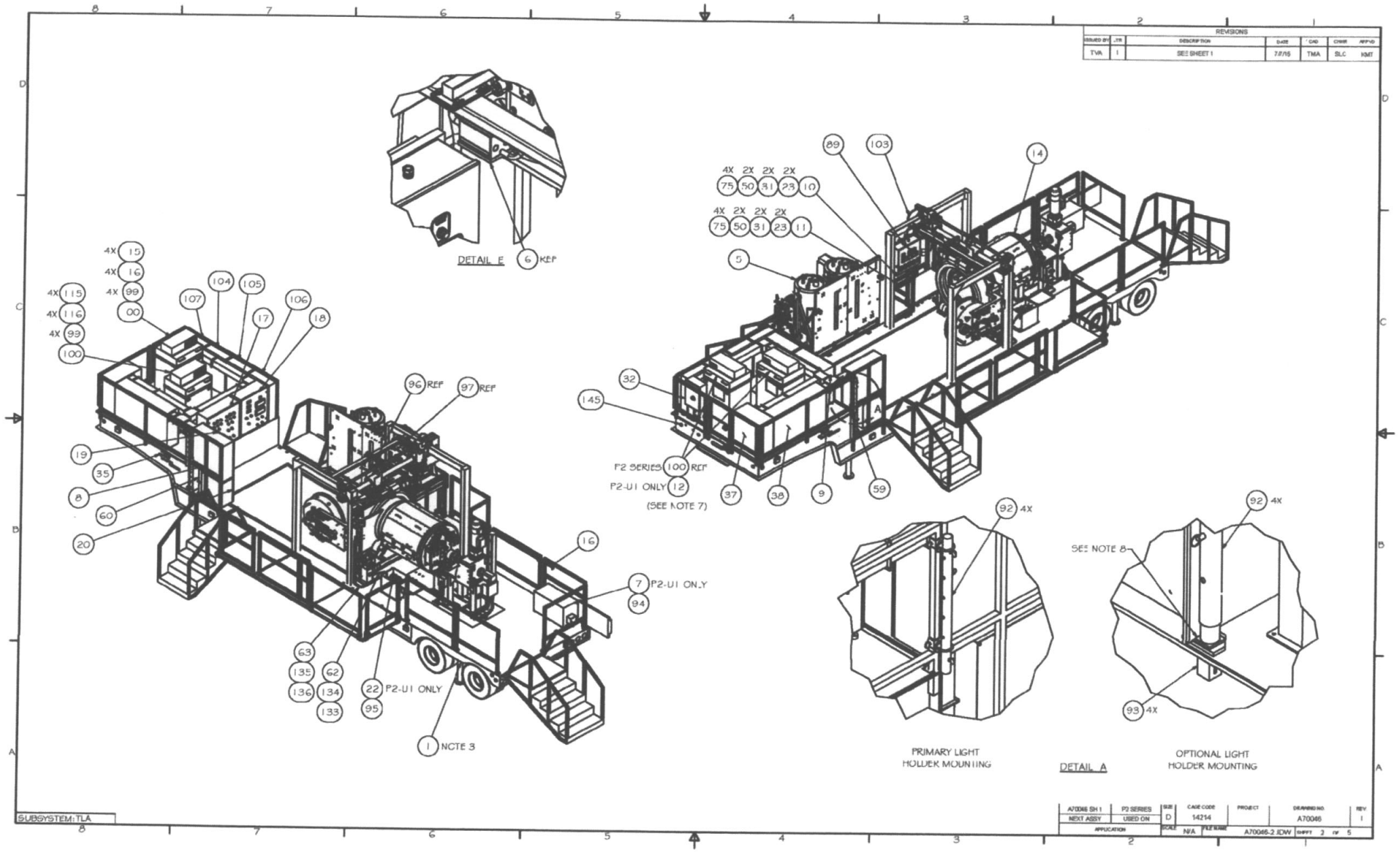

REV STATUS OF SHEETS	REV		
	SH		
CONTRACT NUMBER W911SR-12-D-0006	TASK NUMBER D-0019	leidos National Security Sector	
UNLESS OTHERWISE SPECIFIED– DIMENSIONS ARE IN INCHES ASME Y14.100M APPLIES	DRAWN 08/26/2014 T. Thompson	CHK 08/26/2014 J. Blevins	TITLE SYSTEM ASSEMBLY TRAILER ASSEMBLY
TOLERANCES: .XX ±.02 .XXX ±.005 ∠ ±1° 125	TM APVD 08/26/2014 J. Blevins	08/26/2014 J. Blevins	
MATERIAL —	APVD —		SIZE D / CAGE CODE OWR61 / DWG. NO. A70046 / REV 1
FINISH —	APVD —		SCALE NTS / SHEET 2 of 5

FILE NAME: A70046–sh2	
SOFTWARE: – VERSION: –	
–	–
–	–
NEXT ASSY	USED ON

FOLD LINE

D A70046

ALABAMA LICENSED PROFESSIONAL ENGINEER JERRY L. BLEVINS

REVISIONS				
REV	DESCRIPTION	DATE	APPROVED	

REVISIONS						
ISSUED BY	LTR	DESCRIPTION	DATE	CAD	CHKR	APPVD
TVA	1	SEE SHEET 1	7/2/15	TMA	SLC	GMT

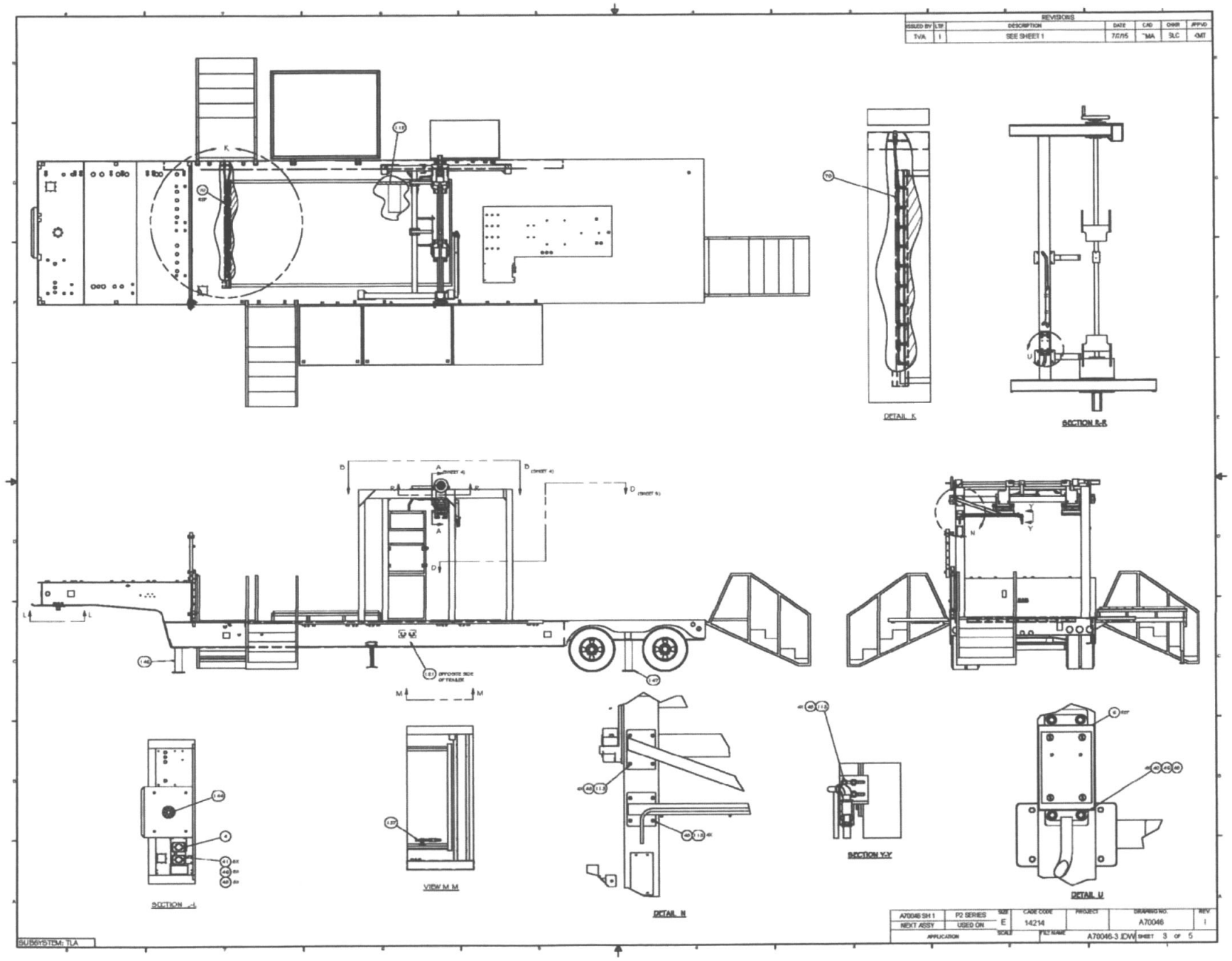

A70046 SH 1	P2 SERIES	SIZE E	CAGE CODE 14214	PROJECT	DRAWING NO. A70046	REV 1
NEXT ASSY	USED ON					
APPLICATION		SCALE	FILE NAME A70046-3.DWG	SHEET 3 OF 5		

FILE NAME: A70046-sh3	
SOFTWARE: –	VERSION: –
–	–
–	–
NEXT ASSY	USED ON

REV STATUS OF SHEETS	REV		
	SH		
CONTRACT NUMBER W911SR-12-D-0006	TASK NUMBER D-0019	leidos National Security Sector	
UNLESS OTHERWISE SPECIFIED– DIMENSIONS ARE IN INCHES ASME Y14.100M APPLIES	DRAWN 08/26/2014 T. Thompson	CHK 08/26/2014 J. Blevins	TITLE SYSTEM ASSEMBLY TRAILER ASSEMBLY
TOLERANCES: .XX ±.02 .XXX ±.005 ∠ ±1° 125	TM APVD 08/26/2014 J. Blevins	08/26/2014 J. Blevins	
MATERIAL –	APVD –		SIZE D / CAGE CODE OWR61 / DWG. NO. A70046 / REV 1
FINISH –	APVD –		SCALE NTS / SHEET 3 of 5

ALABAMA LICENSED PROFESSIONAL ENGINEER JERRY L. BLEVINS

D A70046 REV 1

REVISIONS				
REV	DESCRIPTION	DATE	APPROVED	

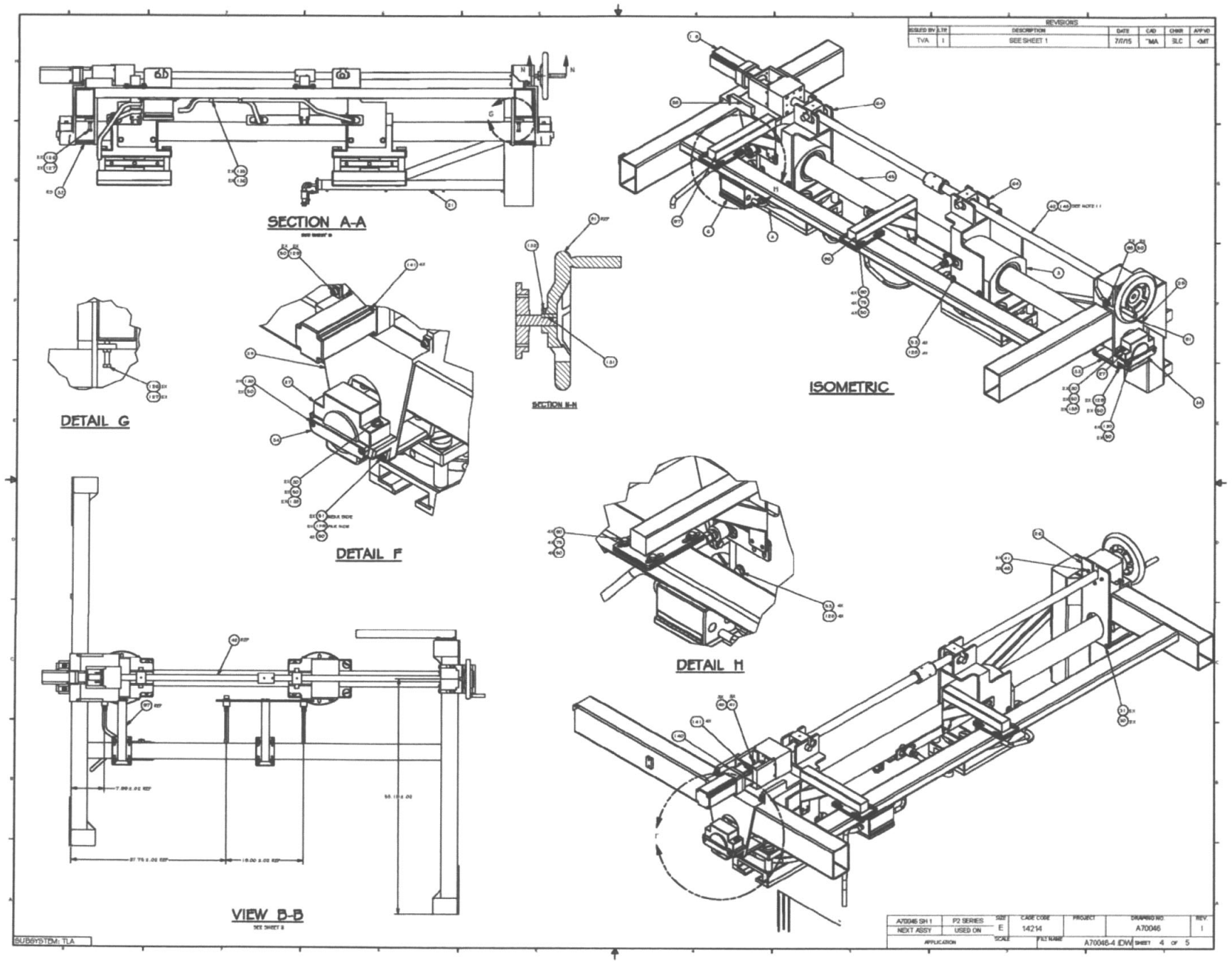

REV STATUS OF SHEETS	REV																	
	SH																	

CONTRACT NUMBER W911SR-12-D-0006	TASK NUMBER D-0019	leidos National Security Sector	
UNLESS OTHERWISE SPECIFIED– DIMENSIONS ARE IN INCHES ASME Y14.100M APPLIES	DRAWN 08/26/2014 T. Thompson	CHK 08/26/2014 J. Blevins	TITLE SYSTEM ASSEMBLY TRAILER ASSEMBLY
TOLERANCES: .XX ±.02 .XXX ±.005 ∠ ±1° 125	TM APV'D 08/26/2014 J. Blevins	08/26/2014 J. Blevins	
MATERIAL –	APV'D –		SIZE D / CAGE CODE OWR61 / DWG. NO. A70046 / REV 1
FINISH –	APV'D –		SCALE NTS / SHEET 4 of 5

FILE NAME: A70046-sh4	
SOFTWARE: – VERSION: –	
–	–
–	–
NEXT ASSY	USED ON

ALABAMA LICENSED PROFESSIONAL ENGINEER JERRY L. BLEVINS 7/14/15

D A70046 REV 1

REVISIONS				
REV	DESCRIPTION	DATE	APPROVED	

REVISIONS						
ISSUED BY	LTR	DESCRIPTION	DATE	CAD	CHKD	APPVD
TVA	1	SEE SHEET 1	7/17/15	TMA	BLC	KMT

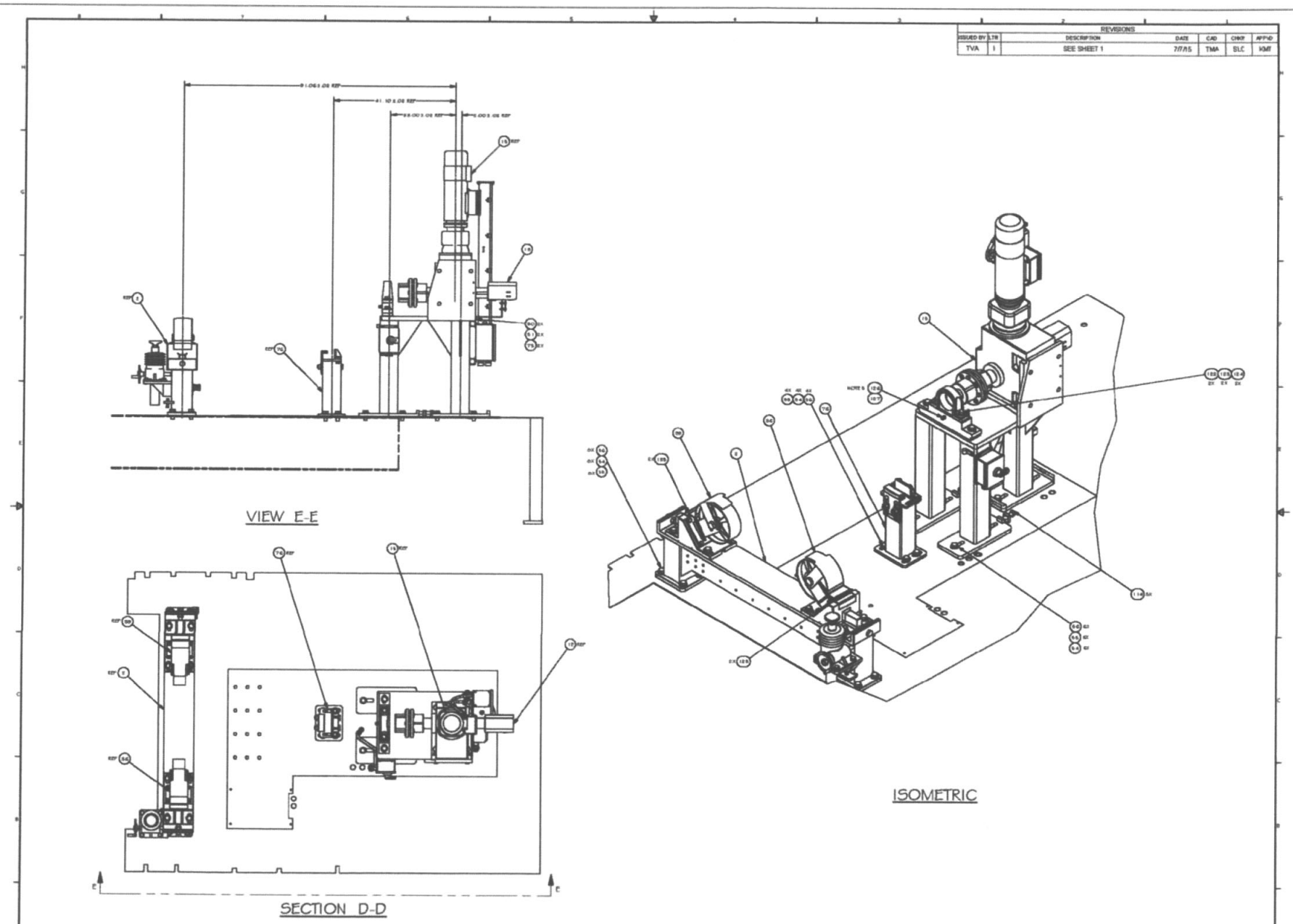

A70046 SHT. 1	P2 SERIES	SIZE	CAGE CODE	PROJECT	DRAWING NO.	REV
NEXT ASSY	USED ON	E	14214		A70046	1
APPLICATION		SCALE	FILE NAME	A70046-5.IDW	SHEET 5 OF 5	

SAUBSYSTEM: TLA

ALABAMA LICENSED PROFESSIONAL ENGINEER JERRY L. BLEVINS 12/14/15

REV STATUS OF SHEETS	REV																
	SH																

CONTRACT NUMBER W911SR-12-D-0006	TASK NUMBER D-0019	leidos National Security Sector 2400-A Bor MR Corporate Center Drive Abingdon, MD 21009
UNLESS OTHERWISE SPECIFIED– DIMENSIONS ARE IN INCHES ASME Y14.100M APPLIES TOLERANCES: .XX ±.02 .XXX ±.005 ∠ ±1° 125	DRAWN 08/26/2014 T. Thompson CHK 08/26/2014 J. Blevins TM APVD 08/26/2014 J. Blevins 08/26/2014 J. Blevins	TITLE SYSTEM ASSEMBLY TRAILER ASSEMBLY
MATERIAL –	APVD –	SIZE D / CAGE CODE 0WR61 / DWG. NO. A70046 / REV 1
FINISH –	APVD –	SCALE NTS / SHEET 5 of 5

FILE NAME: A70046-sh5	
SOFTWARE: –	VERSION: –
–	–
–	–
NEXT ASSY	USED ON

FOLD LINE

D A70046 REV 1

REVISIONS			
REV	DESCRIPTION	DATE	APPROVED

NOTES:

1. DIMENSIONING AND TOLERANCING PER ASME Y14.5 1994.
2. MATERIAL: SEE PARTS LIST.
3. LABELS SHOWN ON THIS DRAWING TO BE 1/4 (.250) HIGH BLACK CHARACTERS AND LOCATED APPROXIMATELY WHERE SHOWN.
4. APPLY DOUBLE SIDED ADHESIVE TAPE (ITEM 29) TO UNDERSIDE OF WIRE DUCT (ITEM 24) BEFORE INSTALLING ONTO PANEL DOOR (ITEM 1).

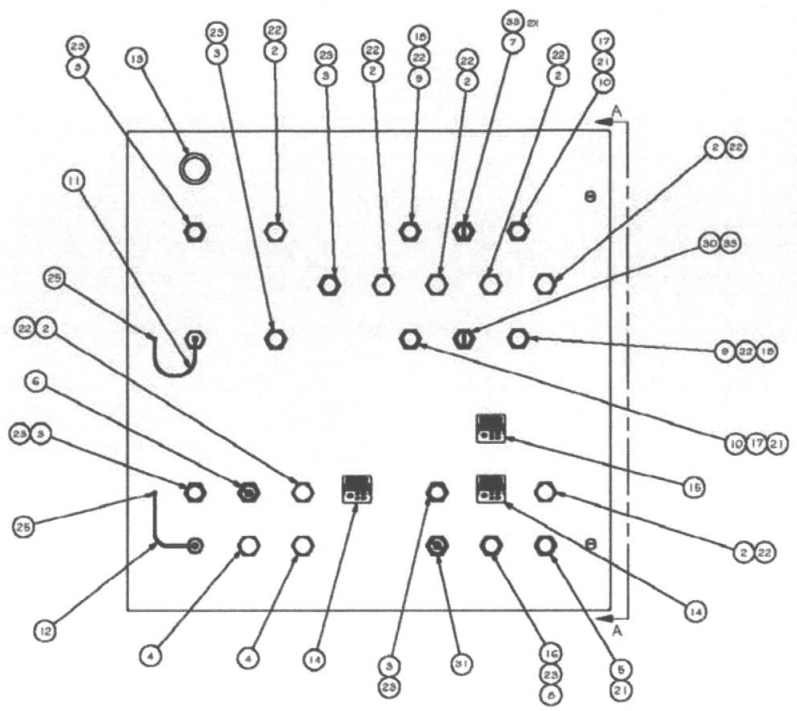

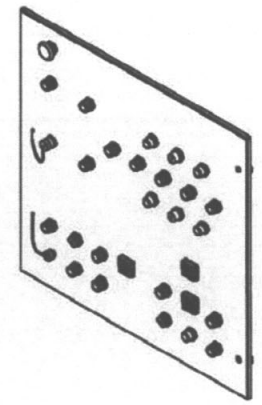

REVISIONS					
ISSUED BY	LTR	DESCRIPTION	DATE	CAD	CHKR	APPVD
TVA	D	REVISED PER NOR 261-0010-001 ; 261-0031-035	10/25/00	LEH/ EDF	SLC	RWK
TVA	E	REVISED PER NOR 2C1-0050-005	08/01/01	ADM	SLC	TSM
TVA	F	REVISED PER NOR 261-0064-013	08/01/2011	DPB	SLC	TSM
TVA	G	REVISED PER NOR 261 0080 010	05/16/14	LEH	ZWS	KMT

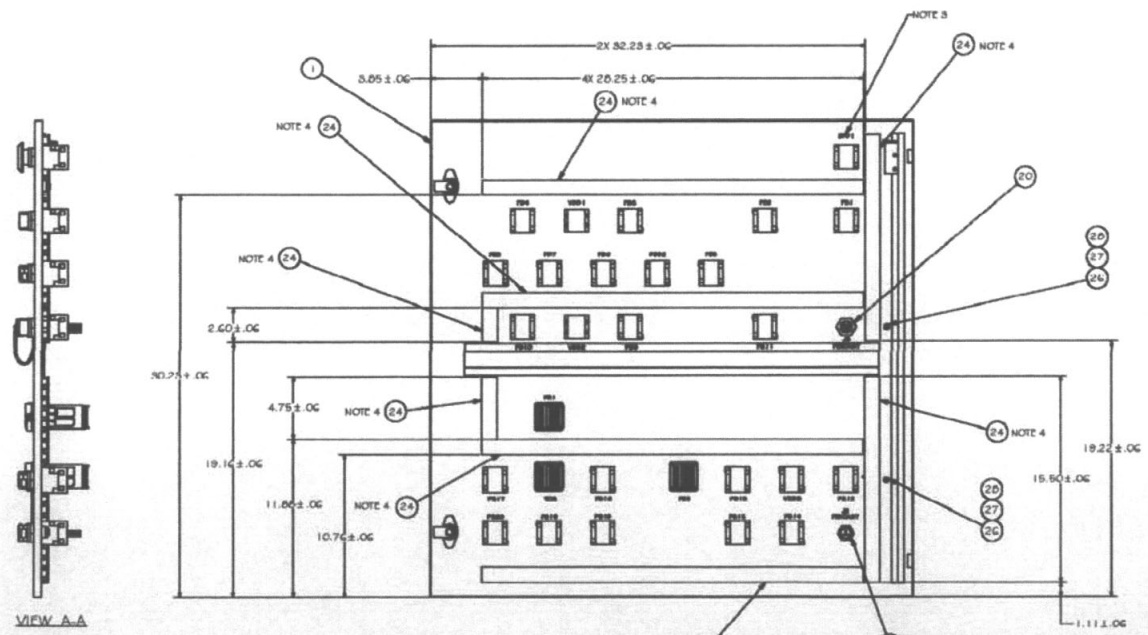

QTY. SHOWN IS FOR 1 ASSEMBLY, 1 ASSEMBLY REQ'D PER DWG. A71960

ITEM	QTY	PART NUMBER	DESCRIPTION	VENDOR
33	3	CR104PXC01	CONTACT BLOCK, 1 NO-1 NC	GE
32	AR	C11G6	WIRE DUCT COVER (NOT SHOWN)	PANDUIT
31	1	CR104P5J21M11S2	2 POSITION SELECTOR SWITCH, AMBER	GE
30	1	CR104P5R21A92M	KEY OPERATED SELECTOR SWITCH, 2-POSITION	GE
29	AR		DOUBLE SIDED ADHESIVE TAPE	
28	2		#4-40 UNC HEX NUT	
27	2		WASHER, LOCK, .487 O.D. X .260 I.D.	
26	2		WASHER FLAT, #4, 5/8T	
25	2		SCR, STN HD, #4-40 UNC X .500 LG, 5/8T	
24	AR	F1X11G6	WIRE DUCT, 1.00 X 1.00	PANDUIT
23	6	MLB-5RD12C8	INDICATOR LIGHT (RED)	MIRCOLAMP, INC
22	9	1562A131	INDICATOR LIGHT (GREEN)	EBT OPTRONIC GMBH & C
21	3	MLB-5YL12C8	INDICATOR LIGHT (YELLOW)	MIRCOLAMP, INC
20	1	3R9C04A20F0GC01	9 PIN STRAIGHT FEMALE RECEPTACLE	BRAD HARRISON
19	1	1R3C04A21M4C2C	3 PIN STRAIGHT FEMALE RECEPTACLE	BRAD HARRISON
18	2	CR104PXL07G	PUSH TO TEST INDICATING LIGHT LEN, GREEN	GE
17	2	CR104PXL07M	PUSH TO TEST INDICATING LIGHT LEN, AMBER	GE
16	1	CR104PXL07R	PUSH TO TEST INDICATING LIGHT LEN, RED	GE
15	1	FMGC2PJ-A6PJAAA	WATLOW CONTROLLER	WATLOW
14	2	FMGC2PJ-1R7AAAA	WATLOW CONTROLLER	WATLOW
13	1	800T-FX201C6A1	JUMBO HEAD, MUSHROOM, PUSH BUTTON	ALLEN-BRADLEY
12	1	6S-C00655	STAINLESS STEEL CLOSURE CAP	WOODHEAD
11	1	6S-C10589	STAINLESS STEEL CLOSURE CAP	WOODHEAD
10	2	CR104PBL11M1L2	SWITCH, PUSH BUTTON, AMBER	GE
9	2	CR104PBL11G1L2	SWITCH, PUSH BUTTON, GREEN	GE
8	1	CR104PBL11R1L2	SWITCH, PUSH BUTTON, RED	GE
7	1	CR104P5K34A92C02	KEYED OPERATED SELECTOR SWITCH	GE
6	1	CR104P5L21R11S2	2 POSITION SELECTOR SWITCH, RED	GE
5	1	CR104PBL11M3L2	SWITCH, PUSH BUTTON, AMBER	GE
4	2	CR104PBL11W3L2	SWITCH, PUSH BUTTON, WHITE	GE
3	6	CR104PBL11R3L2	SWITCH, PUSH BUTTON, RED	GE
2	7	CR104PBL11G3L2	SWITCH, PUSH BUTTON, GREEN	GE
1	1	A70742	DOOR	

Parts List

U.S. ARMY CHEMICAL MATERIALS AGENCY
PROJECT MANAGER FOR NON-STOCKPILE CHEMICAL MATERIEL
EDGEWOOD AREA, ABERDEEN PROVING GROUND, MD

EXPLOSIVE DESTRUCTION SYSTEM
PHASE 2 SERIES

Sandia National Laboratory
Livermore, California

V-202 VESSEL CONTROL PANEL ASSEMBLY

DOOR ASSEMBLY & WIRING DIAGRAMS

CONTRACT NO.	
DRAWN BY: SCHWINGHAMMER	DATE 10/10/2002
CHECKED BY: C. STOKES	DATE 10/14/2002
APPROVED BY: R. ROMAND	DATE 10/14/2002

A71960	P2 SERIES
NEXT ASSY	USED ON
APPLICATION	

SIZE	CAGE CODE	PROJECT	DRAWING NO.	REV.
E	14214		A70743	G
SCALE NONE	FILE NAME A70743-1.IDW		SHEET 1 OF 3	

SUBSYSTEM: CLC

ALABAMA LICENSED 26016-E PROFESSIONAL ENGINEER JERRY L. BLEVINS 10/14/15

REV STATUS OF SHEETS	REV																
	SH																

CONTRACT NUMBER W911SR-12-D-0006	TASK NUMBER D-0019	leidos National Security Sector 2400-A Rte 40 Gaponski Center Drive Abingdon, MD 21009	
UNLESS OTHERWISE SPECIFIED– DIMENSIONS ARE IN INCHES ASME Y14.100M APPLIES	DRAWN 08/26/2014 T. Thompson	CHK 08/26/2014 J. Blevins	TITLE V-202 VESSEL CONTROL PANEL ASSEMBLY DOOR ASSEMBLY & WIRING DIAGRAMS
TOLERANCES: .XX ±.02 .XXX ±.005 ∠ ±1° 125	TM APVD 08/26/2014 J. Blevins	08/26/2014 J. Blevins	
MATERIAL --	APVD --		SIZE D / CAGE CODE 0WR61 / DWG. NO. A70743 / REV G
FINISH --	APVD --		SCALE NTS / SHEET 1 of 3

FILE NAME: A70743	
SOFTWARE:	VERSION: --
--	--
--	--
NEXT ASSY	USED ON

FOLD LINE

D A70743 REV G

REVISIONS						
REV	DESCRIPTION	DATE	APPROVED			

REVISIONS						
ISSUED BY	LTR	DESCRIPTION	DATE	CAD	CHKR	APPVD
TVA	G	SEE SHEET 1	05/16/14	LEH	ZMB	KMT

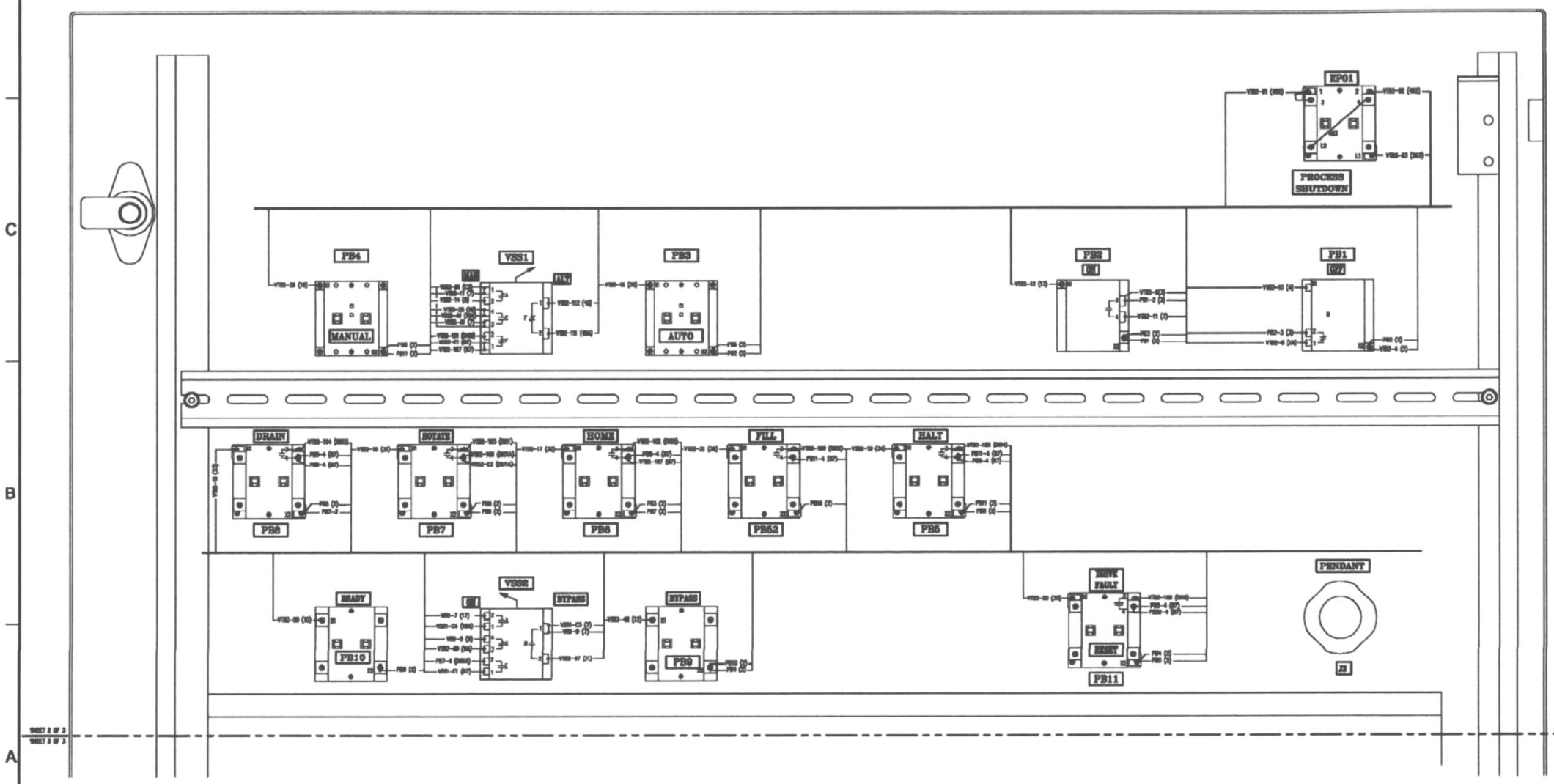

A70743 SH1	P2 DEPIED	REV	CHGE ORDER	PROJ/SUBSY	DRAWING NO.	REV
NEXT ASSY	USED ON	D	14214		A70743	G
APPLICATION		SCALE NONE	FILE NAME A70743-2.DWG		SHEET 2 OF 3	

SUBSYSTEM: ELC

FILE NAME: A70743	
SOFTWARE:	VERSION: –
–	–
–	–
NEXT ASSY	USED ON

REV STATUS OF SHEETS	REV																
	SH																

CONTRACT NUMBER W911SR-12-D-0006	TASK NUMBER D-0019	leidos National Security Sector
UNLESS OTHERWISE SPECIFIED– DIMENSIONS ARE IN INCHES ASME Y14.100M APPLIES	DRAWN 08/26/2014 T. Thompson	CHK 08/26/2014 J. Blevins
TOLERANCES: .XX ±.02 .XXX ±.005 ∠ ±1° 125	TM APVD 08/26/2014 J. Blevins	APVD 08/26/2014 J. Blevins
MATERIAL –	APVD –	TITLE V-202 VESSEL CONTROL PANEL ASSEMBLY DOOR ASSEMBLY & WIRING DIAGRAMS
FINISH –	APVD –	SIZE D / CAGE CODE 0WR61 / DWG. NO. A70743 / REV G
		SCALE NTS / SHEET 2 of 3

ALABAMA LICENSED 22143-E PROFESSIONAL ENGINEER JERRY L. BLEVINS

D A70743 REV G

REVISIONS			
REV	DESCRIPTION	DATE	APPROVED

REVISIONS						
TVA	0	SEE SHEET 1	09/19/14	LEH	ZWB	KMT

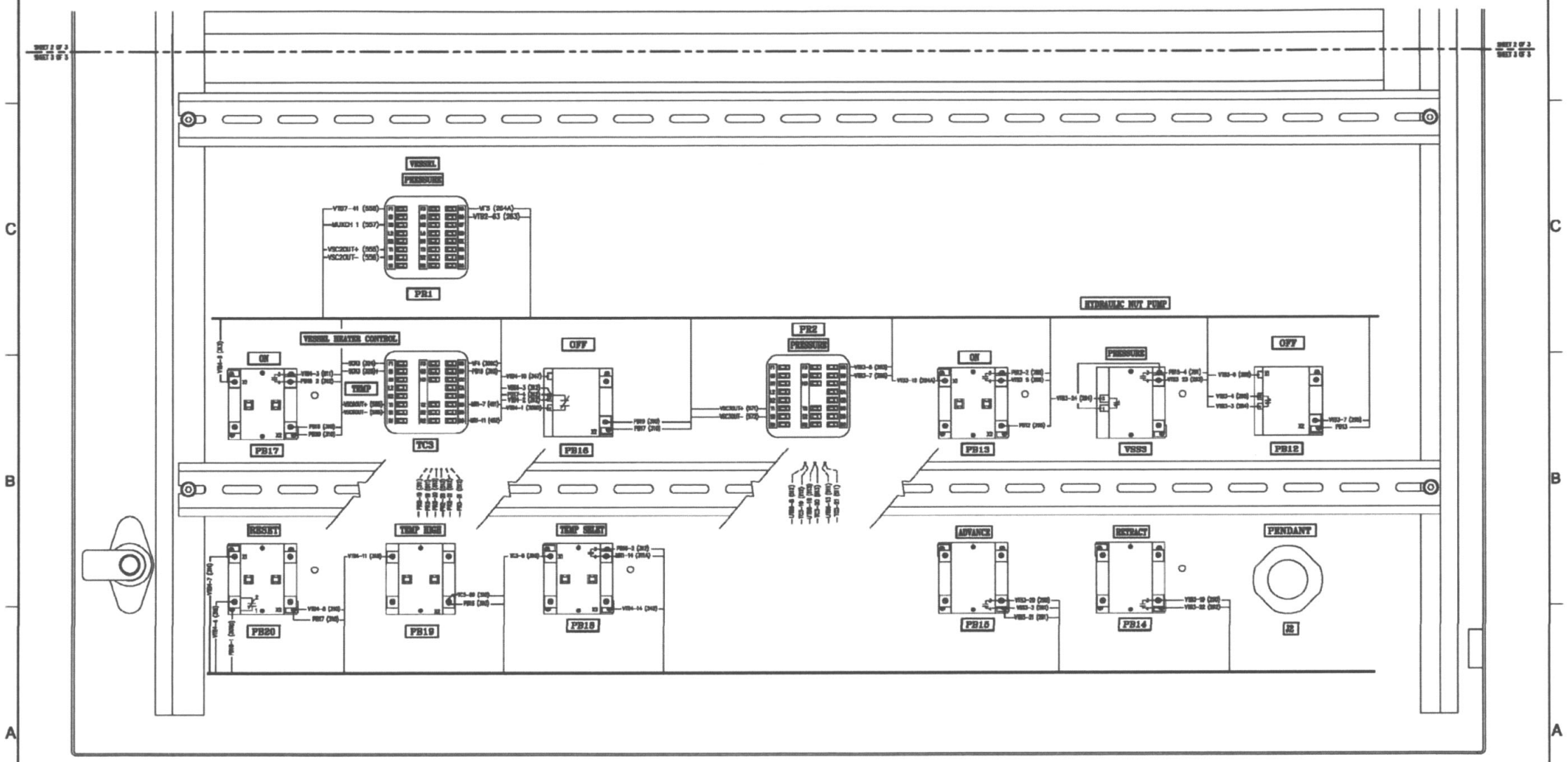

A70743 SH1	P2 SERIES	SIZE	CAGE CODE	PROJECT	DRAWING NO.	REV
NEXT ASSY	USED ON	D	14214		A70743	G
APPLICATION		SCALE NONE	FILE NAME A70743.DWG		SHEET 3 OF 3	

SUBSYSTEM: ELC

REV STATUS OF SHEETS	REV																	
	SH																	

CONTRACT NUMBER W911SR-12-D-0006	TASK NUMBER D-0019	leidos National Security Sector	
UNLESS OTHERWISE SPECIFIED– DIMENSIONS ARE IN INCHES ASME Y14.100M APPLIES	DRAWN 08/26/2014 T. Thompson	CHK 08/26/2014 J. Blevins	TITLE V-202 VESSEL CONTROL PANEL ASSEMBLY DOOR ASSEMBLY & WIRING DIAGRAMS
TOLERANCES: .XX ±.02 .XXX ±.005 ∠ ±1° 125	TM APVD 08/26/2014 J. Blevins	TM APVD 08/26/2014 J. Blevins	
MATERIAL –	APVD –		SIZE D / CAGE CODE 0WR61 / DWG. NO. A70743 / REV G
FINISH –	APVD –		SCALE NTS / SHEET 3 of 3

FILE NAME: A70743	
SOFTWARE:	VERSION: –
–	–
–	–
NEXT ASSY	USED ON

ALABAMA LICENSED PROFESSIONAL ENGINEER JERRY L. BLEVINS NO. 32143-E

9/16/15

D A70743 REV G

REVISIONS			
REV	DESCRIPTION	DATE	APPROVED

NOTES:
1. THIS ITEM IS LISTED IN THE PARTS LIST BUT IT IS FOR REFERENCE ONLY.
2. THIS ITEM IS PART OF THE EXPLOSIVE OPENING SUBSYSTEM AND IS ONLY USED DURING OPERATION.
3. THIS ITEM IS STORED IN THE UTILITY SUPPORT TRAILER UNTIL NEEDED.
4. QUANTITY SHOWN FOR THIS ITEM INCLUDES SPARES THAT ARE USED DURING SYSTEM OPERATION.
5. PREVIOUS PART NUMBER # 103G04 AND VENDOR: LAB SAFETY.

ITEM	QTY	PART NUMBER	DESCRIPTION	VENDOR	NOTE
101	1	A99770	QUICK DISCONNECT KIT		NOTE 3
100	1	A99776	AP05 ROD INSERTION TOOL		NOTE 3
99	1	A99971	4.2 MORTAR C-PACK ASSEMBLY 3D MODEL (FOR REFERENCE ONLY, NOT SHOWN)		
98	1	A73772-F2	VENT HOSE ASSEMBLY (NOT SHOWN)		NOTE 3
97	1	A73767-F2	ALTERNATE VENT MANIFOLD (NOT SHOWN)		NOTE 3
96	1	A77869	FRONT AND REAR LOADING TABLES PHYSICAL CONFIGURATION		NOTE 3
95	1	A77861	STR FULL LENGTH HOLDER 3D MODEL (FOR REFERENCE ONLY, NOT SHOWN)		
94	1	A77872	AP05 FULL LENGTH STR HOLDER ASSEMBLY (NOT SHOWN)		NOTE 2
93	1	A77869	BOTTOM SUPPORT PLATE		
92	1	A77860	TOP SUPPORT PLATE		
91	1	A77863	PADDLE GAP COVER		
90	1	A77205	AP05 UNIVERSAL TRAG SHIELD ASSEMBLY		
89	1	A76446	MTOA I W/ "-STYLE ADAPTER ASSEMBLY		NOTE 2
88	2		FLAT WASHER, 1/4", SS		
87	2		HEX NUT, 1/4-20, SS		
86	2		SCR, HEX HD, 1/4-20 x 2" LG, SS		
85	1	A76134	MTOA I ASSEMBLY		NOTE 2
84	1	A76126	STR WARHEAD ASSEMBLY		NOTE 2
83	1	A73819	STR SINGLE WARHEAD ASSEMBLY		NOTE 2
82	1	A74432	FAN WASTE DRUM HOSE ADAPTER		
81	1	A73642-F2	ENWSTE & MECHANICAL "LUSHING KIT (NOT SHOWN)		
80	1	A72650-F2	GROUNDING SET CABLE ASSEMBLY		NOTE 3
79	1	A74446	STR FULL LENGTH ASSEMBLY (NOT SHOWN)		NOTE 1
78	1	A74439	STR WARHEAD 1 liter WEIGHSTIN ASSEMBLY (NOT SHOWN)		NOTE 1
77	1	A74374	MAIN POWER CABLE 100'		
76	1	A74373	MAIN POWER CABLE 50'		
75	1	A73769-F2	ENWSTE HARDWARE KIT		NOTE 1
74	1	A73791-F2	ENWSTE PROCESS FLOW DIAGRAM		NOTE 1
73	1	A74330-F2	ENWSTE & MECHANICAL "LUSHING KIT FLOW DIAGRAM		NOTE 1
72	1	A74429	POWER WIRING SCHEDULE (NOT SHOWN)		
71	1	A74430	CONTROL WIRING SCHEDULE (NOT SHOWN)		
70	1	A74431	SIGNAL WIRING SCHEDULE (NOT SHOWN)		
69	4		3-PC MICA SAND HEATER 2.4" ID X 6" WIDE, 5000W, 480V, SS BORED (FOR STEEL DRUMS)		NOTE 3
68	1	A74350	4.2 MORTAR C-PACK KIT		NOTE 2
67	1	A74369	STR C-PACK KIT		NOTE 2
66	1	A74352	32 POINT SLOT WRENCH		NOTE 3
65	1	750K35	GROUNDING ROD, UNTHREADED, 5/8" DIA, 8' LENGTH	McMASTER-CARR	NOTE 3
64	1	7812532	COPPER GROUNDING WIRE, SOLID, #2 GAUGE, 50' LENGTH	McMASTER-CARR	NOTE 3
63	1	A72617-F2	COMMAND POST BOX ASSEMBLY & WIRING DIAGRAM		NOTE 3
62	1	A66672-F2	DRUM PUMP ASSEMBLY		NOTE 3
61	1	A72519	SHORTING PLUG		NOTE 3
60	1	A99976	1 5/16 SOCKET TURN HANDLE WELDMENT		NOTE 3
59	1	A73784	175 MM MULTIPLE KIT ASSEMBLY		NOTE 2
58	1	A73751	4.2 S - PACK P95 ASSEMBLY		NOTE 2
57	1	A71704	PIPING & INSTRUMENTATION DIAGRAM (NOT SHOWN)		
56	1	A71709	PROCESS FLOW DIAGRAM (NOT SHOWN)		
55	1	A99950	SHIPPING CONFIGURATION (NOT SHOWN)		
54	1	A67654-F2	175 MM SHELL ASSEMBLY		NOTE 2
53	1	A67635-F2	4.2" MORTAR ASSEMBLY		NOTE 2
52	1	A67656-F2	LIVENS ASSEMBLY		NOTE 2
51	1	A67627-F2	M-120 BOMBLET ASSEMBLY		NOTE 2
50	1	A67633	5" SHELL ASSEMBLY		NOTE 2
49	1	A67632	115/5 MM SHELL ASSEMBLY		NOTE 2
48	1	A69623	RAIL CORNER (NOT SHOWN)		
47	1	A69622	RAIL STRAIGHT (NOT SHOWN)		
46	1	A71678	CESSEL HOE ASSEMBLY		NOTE 3
45	1	A72020	ROTATION FENDAR ASSEMBLY		NOTE 3
44	1	A71990	2-DUAL HYDRAULIC HUT PUMP CABLE ASSEMBLY (NOT SHOWN)		
43	1	A72018	SEAL PROTECTOR RING		NOTE 2
42	1	A72019	CLAMP KENCITE ASSEMBLY		NOTE 3
41	1	A62015-F2	STRAINER HOSE ASSEMBLY		
40	1	A62014-F2	D-403 FAN WASTE DRUM HOSE ASSEMBLY		
39	3	A71077-F2	BURST DISC SUPPORT ASSEMBLY		
38	1	A62641-F2	HELIUM REGULATOR MANIFOLD		
37	1	441206-2000	LEAK DETECTOR HOSE	MDC	
36	4		2-PC MICA SAND HEATER 3/4-5" ID X 6" WIDE, 7500W, 480V, 1 PHASE (FOR PLASTIC DRUMS)		NOTE 3
35	AR	A74456	STR S-PACK FULL LENGTH KIT		NOTE 2
34	1	A74352	ENWSTE CONTROL SYSTEM DIAGRAM		NOTE 1
33	1	A99977	3/5 SOCKET TURN HANDLE WELDMENT		NOTE 3
32	1		D-403 FAN WASTE DRUM, 55 GAL CLOSED TOP POLY LINED STEEL DRUM		
31	1		D-401A PROCESS WASTE DRUM 1A, 55 GAL CLOSED TOP POLY LINED STEEL DRUM		
30	1		SOLID WASTE DRUM, 55 GAL OPEN TOP UNLINED STEEL DRUM		
29	1	A74426	SYSTEM SUPPLY AIR LINE ASSEMBLY		
28	1	7491K74	GROUNDING ROD CLAMP, 5/8", 100 WIRE GAUGE MAX., SINGLE NUT, 5/8"	McMASTER-CARR	NOTE 3
27	1	JB1004G	HELIUM BOTTLE		
26	1	A62697	HELIUM HOSE ASSEMBLY		
25	1	A62011-F2	TRAILER FAN SPRAY HOSE ASSEMBLY		
24	1	6MDJ5	DOUBLE CYLINDER WALL BRACKET (SEE NOTE 3)	GRAINGER	
23	5		D-402 PROCESS WASTE DRUM 2, 55 GAL CLOSED TOP UNLINED STEEL DRUM		NOTE 4
22	1		D-404 REAGENT DRUM, 55 GAL CLOSED TOP POLY LINED STEEL DRUM		
21	4	90-120 10GF	CENTURY CHEM-SCALE	FORCE FLOW CO.	
20	4	27208L	SECONDARY CONTAINMENT	LAB SUPPLY INC.	
19	1	5512D6	UNIFORB CARBON FILTER	SATRADES CORP.	
18	2		D-401 PROCESS WASTE DRUM 1, 55 GAL CLOSED TOP POLY LINED STEEL DRUM		NOTE 4
17	1	A72632	REAGENT PLATFORM SIGNAL DISTRIBUTION W/ INTERCONNECTION CABLE ASSEMBLY		
16	4	17A-7/2DC-ROF	RMF NPT CAPS F	SANDIA NATIONAL LAB	NOTE 3
15	2	A72618	BURST DISC CABLE ASSEMBLY		
14	1		3/8 DIA. GARDEN HOSE, WATER SUPPLY		
13	1	A72635	REAGENT PLATFORM POWER DISTRIBUTION W/ INTERCONNECTION CABLE ASSEMBLY		
12	1	440113	LEAK DETECTOR HOSE, SHORT	MDC	
11	1	A62415-F2	WIRING SYSTEM ASSEMBLY		NOTE 2
10	1	A62012-F2	TRAILER FAN WASTE HOSE ASSEMBLY		
9	1	A62013-F2	REAGENT PLATFORM FAN WASTE HOSE ASSEMBLY		
8	2	A62010-F2	D-401 & D-401A WASTE DRUM VENT HOSE ASSEMBLY		
7	2	A62666-F2	V-302 VESSEL WASTE DRUM HOSE ASSEMBLY		
6	1	A62662-F2	C-304 REAGENT PUMP SOURCE HOSE ASSEMBLY		
5	1	A62647-F2	WASTE DRUM "B" ASSEMBLY		
4	2	A71642-F2	D-404 REAGENT DRUM UP 1LBS ASSEMBLY		NOTE 4
3	2	A70061-F2	D-401 & D-401A WASTE DRUM DIP TUBE ASSEMBLY		
2	2	A62604-F2	BURST DISC ASSEMBLY		
1	1	A70046	TRAILER ASSEMBLY		

Parts List

SUBSYSTEM: TLA

REVISIONS						
ISSUED BY	LTR	DESCRIPTION	DATE	CAD	CHKR	APPVD
TVA	I	REVISED PER NOR 2E1-0049-003	09/01/09	ADM	SLC	TSM
TVA	J	REVISED PER NOR 2E1-0055-005	11/06/09	DPB	SLC	TMM
TVA	K	RPVISED PER NOR 2E1-0099-005	11/10/11	EDF	SLC	TSM
TVA	L	REVISED PER NOR 2E1-0076-001	04/22/13	DPB	SLC	RWW
TVA	M	REVISED PER NOR 2E1-0074-001	02/21/14	EDF	ZWB	KMT

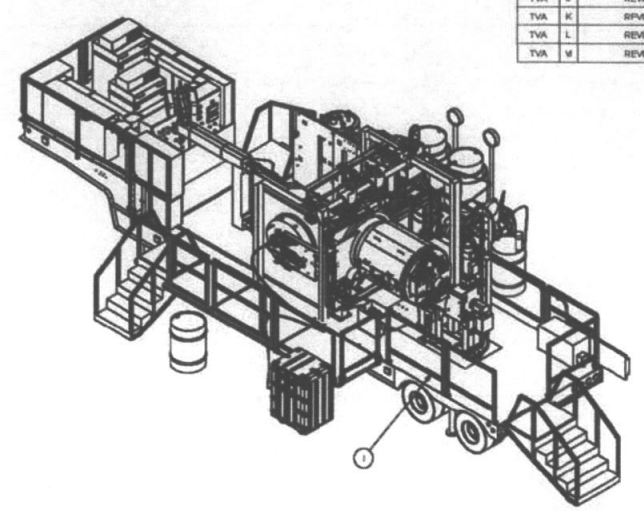

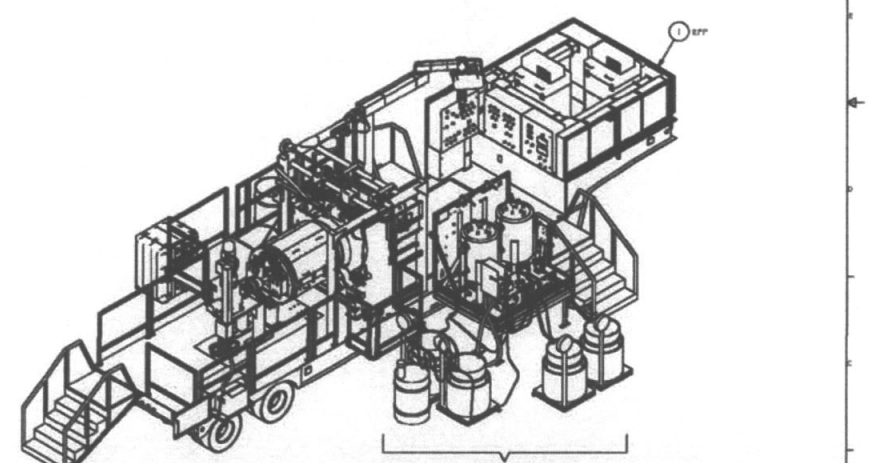

U.S. ARMY CHEMICAL MATERIALS AGENCY
PROJECT MANAGER FOR NON-STOCKPILE CHEMICAL MATERIEL
EDGEWOOD AREA, ABERDEEN PROVING GROUND, MD

EXPLOSIVE DESTRUCTION SYSTEM
PHASE 2 SERIES

Sandia National Laboratory
Livermore, California

EDS PHASE 2 SERIES
SYSTEM ASSEMBLY

CONTRACT NO.	
DRAWN BY: C. STOKES	DATE 2/19/2003
CHECKED BY: J. DIDLAKE	DATE 2/26/2003
APPROVED BY: J. DIDLAKE	DATE 2/26/2003
SIZE E	CAGE CODE 14214
PROJECT	DRAWING NO. A71700
REV. M	
SCALE N/A	FILE NAME A71700.1 (CW)
SHEET 1 OF 4	
24000	P2 SERIES
NEXT ASSY	USED ON
APPLICATION	

ALABAMA LICENSED No. 32143-E PROFESSIONAL ENGINEER JERRY L. BLEVINS 12/15/15

FILE NAME:	A71700-sh1
SOFTWARE:	VERSION: –
–	–
–	–
NEXT ASSY	USED ON

REV STATUS OF SHEETS: REV / SH

CONTRACT NUMBER: W911SR-12-D-0006
TASK NUMBER: D-0019

UNLESS OTHERWISE SPECIFIED– DIMENSIONS ARE IN INCHES ASME Y14.100M APPLIES
TOLERANCES: .XX ±.02 .XXX ±.005 ∠ ±1° 125

DRAWN 08/26/2014 T. Thompson	CHK 08/26/2014 J. Blevins
TM APVD 08/26/2014 J. Blevins	08/26/2014 J. Blevins
MATERIAL –	APVD –
FINISH –	APVD –

leidos National Security Sector

TITLE: EDS PHASE 2 SERIES SYSTEM ASSEMBLY

SIZE	CAGE CODE	DWG. NO.	REV
D	0WR61	A71700	M
SCALE NTS		SHEET 1 of 4	

D A71700

REVISIONS			
REV	DESCRIPTION	DATE	APPROVED

REVISIONS						
ISSUED BY	LTR	DESCRIPTION	DATE	CAD	CHKR	APPVD
TVA	M	SEE SHEET 1	04/23/14	DPB	SLC	RWW

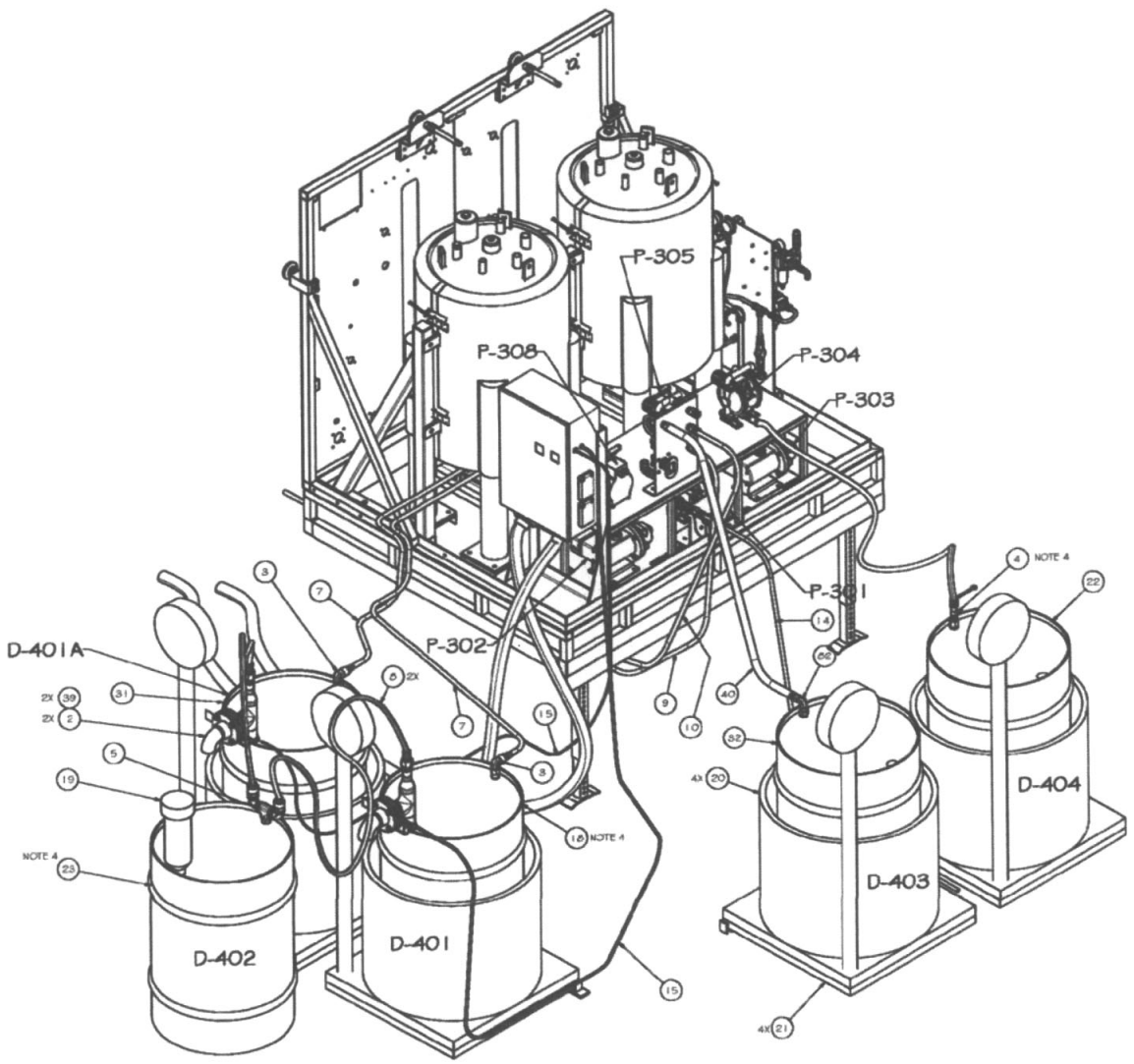

WASTE TRANSFER SUB-SYSTEM

D-401 PROCESS WASTE DRUM 1
D-401A PROCESS WASTE DRUM 1A
D-402 PROCESS WASTE DRUM 2
D-403 PAN WASTE DRUM

REAGENT SUPPLY SUB-SYSTEM

D-404 REAGENT DRUM

A71700 SH 1	P2 SERIES	SIZE D	PART/DWG 14214	PARTS	REFERENCE NO A71700	REV M
NEXT ASSY	USED ON					
APPLICATION		SCALE N/A	FILE NAME A71700-2.IDW	SHEET 2 OF 4		

SUBSYSTEM: TOP LEVEL DWG.

ALABAMA LICENSED PROFESSIONAL ENGINEER JERRY L. BLEVINS NO. 32143-E 12/15/15

REV STATUS OF SHEETS	REV																
	SH																

CONTRACT NUMBER W911SR-12-D-0006	TASK NUMBER D-0019	leidos National Security Sector	
UNLESS OTHERWISE SPECIFIED– DIMENSIONS ARE IN INCHES ASME Y14.100M APPLIES	DRAWN 08/26/2014 T. Thompson	CHK 08/26/2014 J. Blevins	TITLE EDS PHASE 2 SERIES SYSTEM ASSEMBLY
TOLERANCES: .XX ±.02 .XXX ±.005 ∠ ±1° 125	08/26/2014 J. Blevins	TM APVD 08/26/2014 J. Blevins	
MATERIAL —	APVD —		SIZE D / CAGE CODE 0WR61 / DWG. NO. A71700 / REV M
FINISH —	APVD —		SCALE NTS / SHEET 2 of 4

FILE NAME: A71700-sh2	
SOFTWARE:	VERSION: –
–	–
–	–
NEXT ASSY	USED ON

FOLD LINE

D A71700 REV M

REVISIONS			
REV	DESCRIPTION	DATE	APPROVED

REVISIONS						
ISSUED BY	LTR	DESCRIPTION	DATE	CAD	CHKF	APPD
TVA	M	SEE SHEET 1	04/22/14	DPB	SLC	RWN

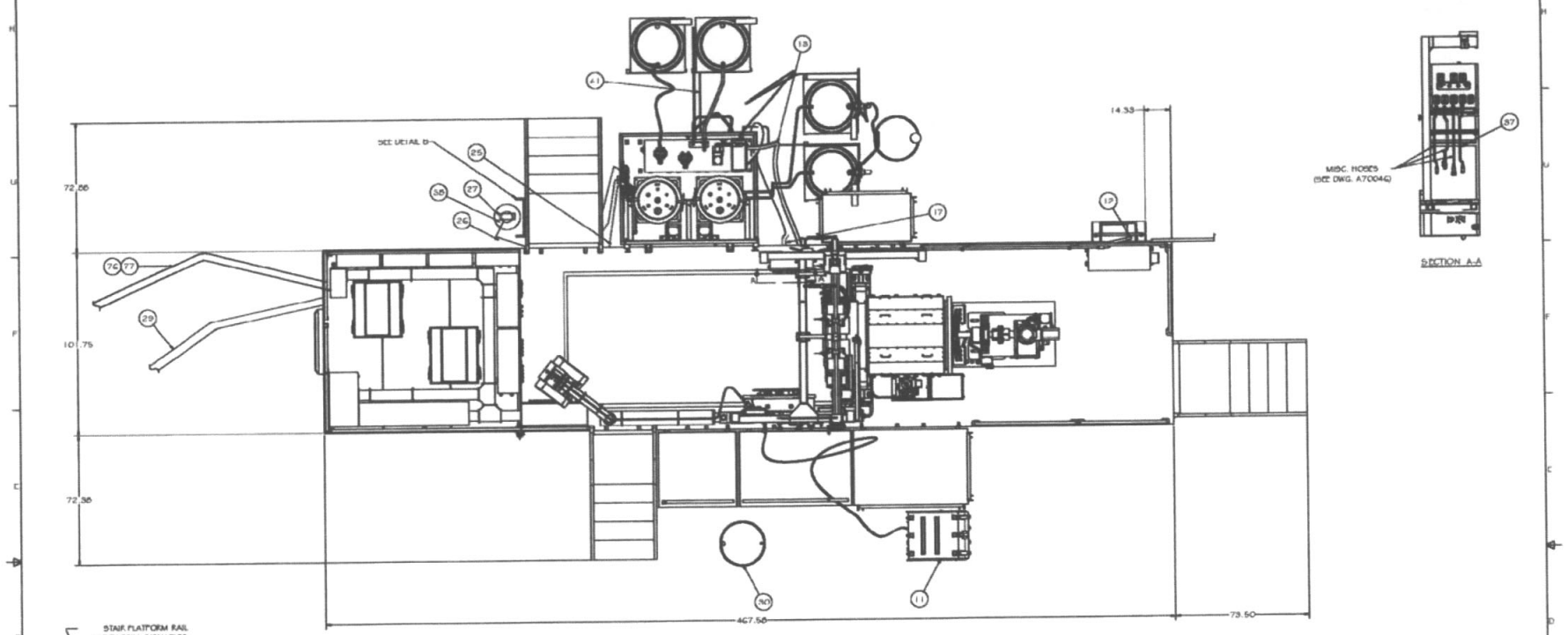

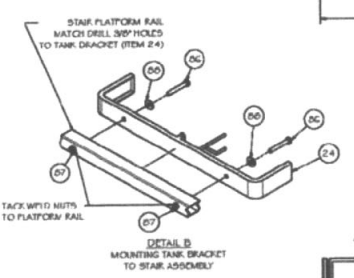

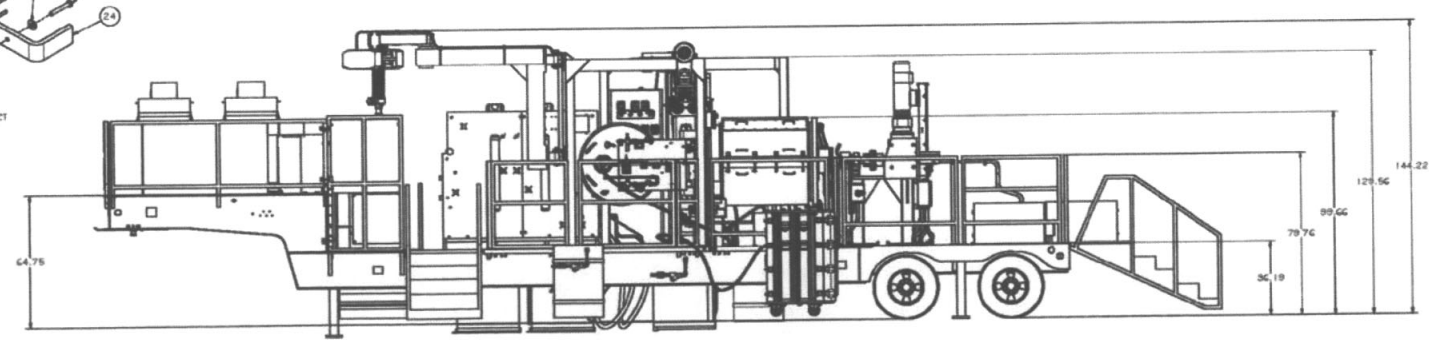

A71700 SH 1	P2 SERIES	SIZE	CAGE CODE	PROJECT	DRAWING NO.	REV
NEXT ASSY	USED ON	E	14214		A71700	M
APPLICATION		SCALE N/A	FILE NAME A71700-3.IDW		SHEET 3 OF 4	

SUBSYSTEM, TOP LEVEL DWG

ALABAMA LICENSED AL 32143-E PROFESSIONAL ENGINEER JERRY L. BLEVINS 12/5/15

FILE NAME: A71700-sh3			
SOFTWARE:	VERSION: –		
–	–		
–	–		
NEXT ASSY	USED ON		

REV STATUS OF SHEETS	REV		
	SH		
CONTRACT NUMBER W911SR-12-D-0006	TASK NUMBER D-0019	leidos National Security Sector	
UNLESS OTHERWISE SPECIFIED– DIMENSIONS ARE IN INCHES ASME Y14.100M APPLIES	DRAWN 08/26/2014 T. Thompson	CHK 08/26/2014 J. Blevins	TITLE EDS PHASE 2 SERIES SYSTEM ASSEMBLY
TOLERANCES: .XX ±.02 .XXX ±.005 ∠ ±1° 125	TM APVD 08/26/2014 J. Blevins	APVD 08/26/2014 J. Blevins	
MATERIAL –	APVD –		SIZE D / CAGE CODE 0WR61 / DWG. NO. A71700 / REV M
FINISH –	APVD –		SCALE NTS / SHEET 3 of 4

D A71700 REV M

REVISIONS			
REV	DESCRIPTION	DATE	APPROVED

REVISIONS							
ISSUED BY	LTR	DESCRIBE FOR	DATE	CAD	CHKD	APPVD
TVA	M	SEE SHEET 1	04/22/14	DPB	SLC	RWW

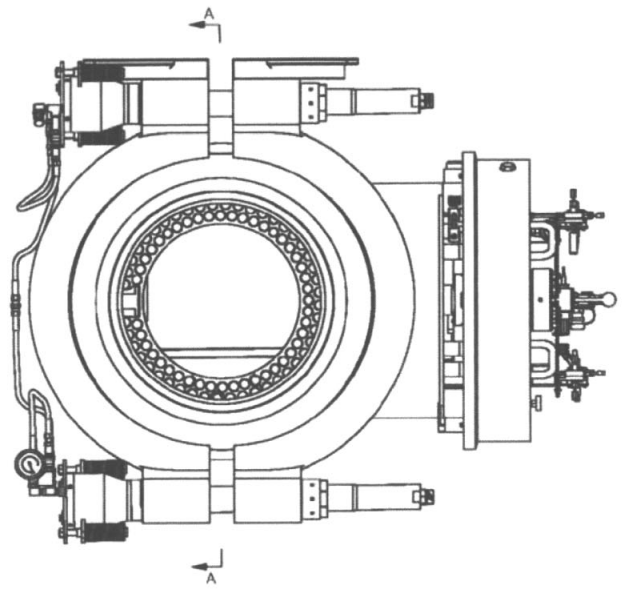

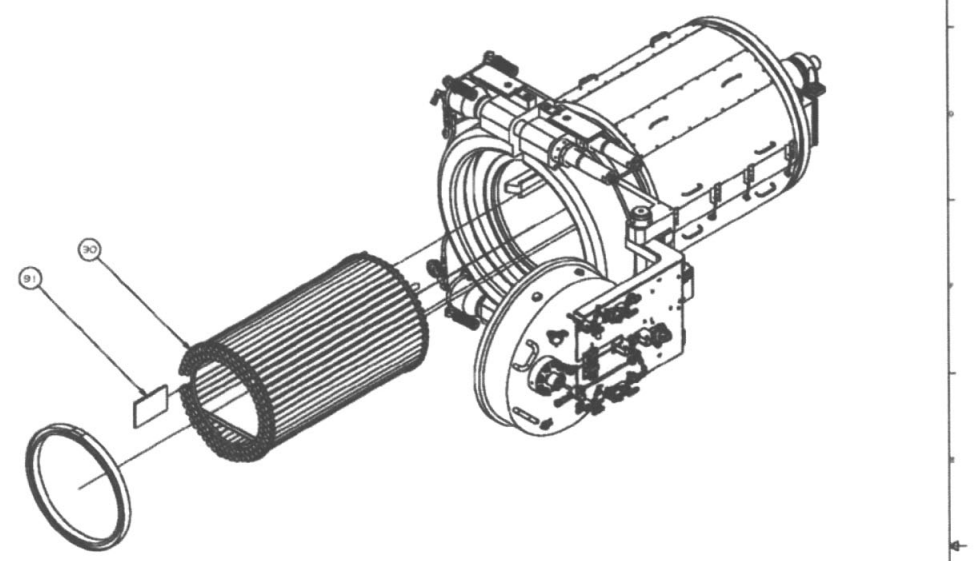

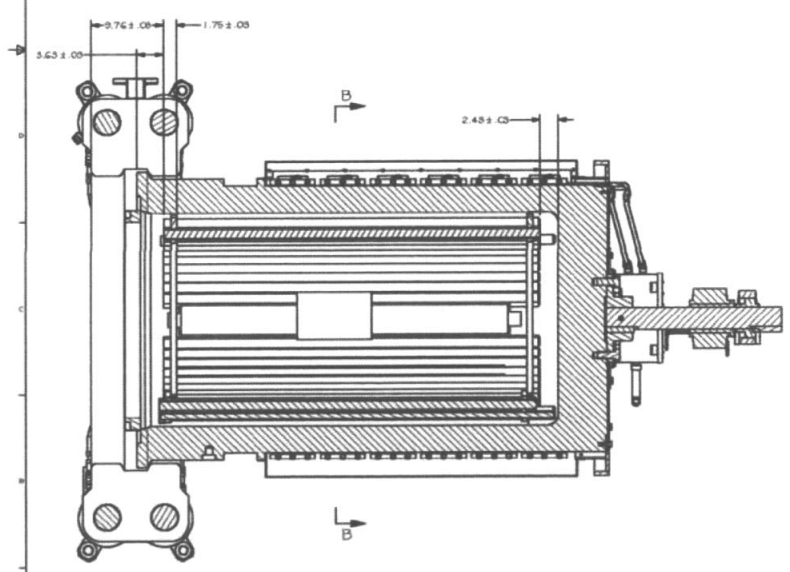

SECTION A-A

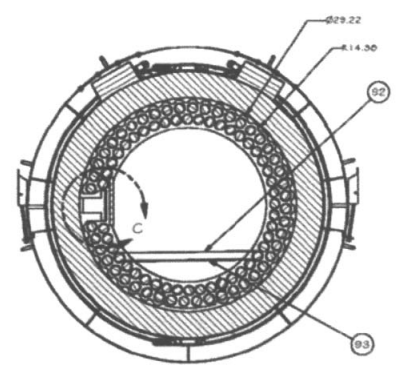

SECTION B-B

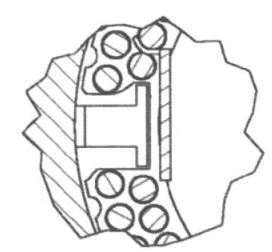

DETAIL C

A71700 SHT	P2 SERIES	SIZE	CAGE CODE	PROJECT	DRAWING NO	REV
NEXT ASSY	USED ON	E	14214		A71700	M
APPLICATION		SCALE N/A	FILE NAME A71700-4.IDW	SHEET 4 of 4		

SUBSYSTEM: TOP LEVEL ASSY.

ALABAMA LICENSED PROFESSIONAL ENGINEER JERRY L. BLEVINS 12/15/15

FILE NAME: A71700-sh4	
SOFTWARE:	VERSION: –
–	–
–	–
NEXT ASSY	USED ON

REV STATUS OF SHEETS	REV																	
	SH																	

CONTRACT NUMBER W911SR-12-D-0006	TASK NUMBER D-0019	leidos National Security Sector
UNLESS OTHERWISE SPECIFIED– DIMENSIONS ARE IN INCHES ASME Y14.100M APPLIES	DRAWN 08/26/2014 T. Thompson	CHK 08/26/2014 J. Blevins
TOLERANCES: .XX ±.02 .XXX ±.005 ∠ ±1° 125	TM APVD 08/26/2014 J. Blevins	APVD 08/26/2014 J. Blevins
MATERIAL –	APVD –	TITLE EDS PHASE 2 SERIES SYSTEM ASSEMBLY
FINISH –	APVD –	SIZE D / CAGE CODE OWR61 / DWG. NO. A71700 / REV M
		SCALE NTS / SHEET 4 of 4

FOLD LINE

REV M

D A71700

REVISIONS			
REV	DESCRIPTION	DATE	APPROVED

REVISIONS						
DRAWN BY	LTR	DESCRIPTION	DATE	CHD	CHKR	APPVD
TVA	-	PRODUCT BASELINE	01/10/04	DPS	MBP	RWK
TVA	A	REVISED PER NCRS 321-0010-001 & 009	10/05/05	SJM	SLC	RWK
TVA	B	REVISED PER NCR 321-0005-001	01/11/11	LDH	SLC	TSM
TVA	C	REVISED PER NCR 321-0070-010	11/10/11	SDP	SLC	TSM
TVA	D	REVISED PER NCR 321-0077-000	10/22/13	SJD	DPS	KMT

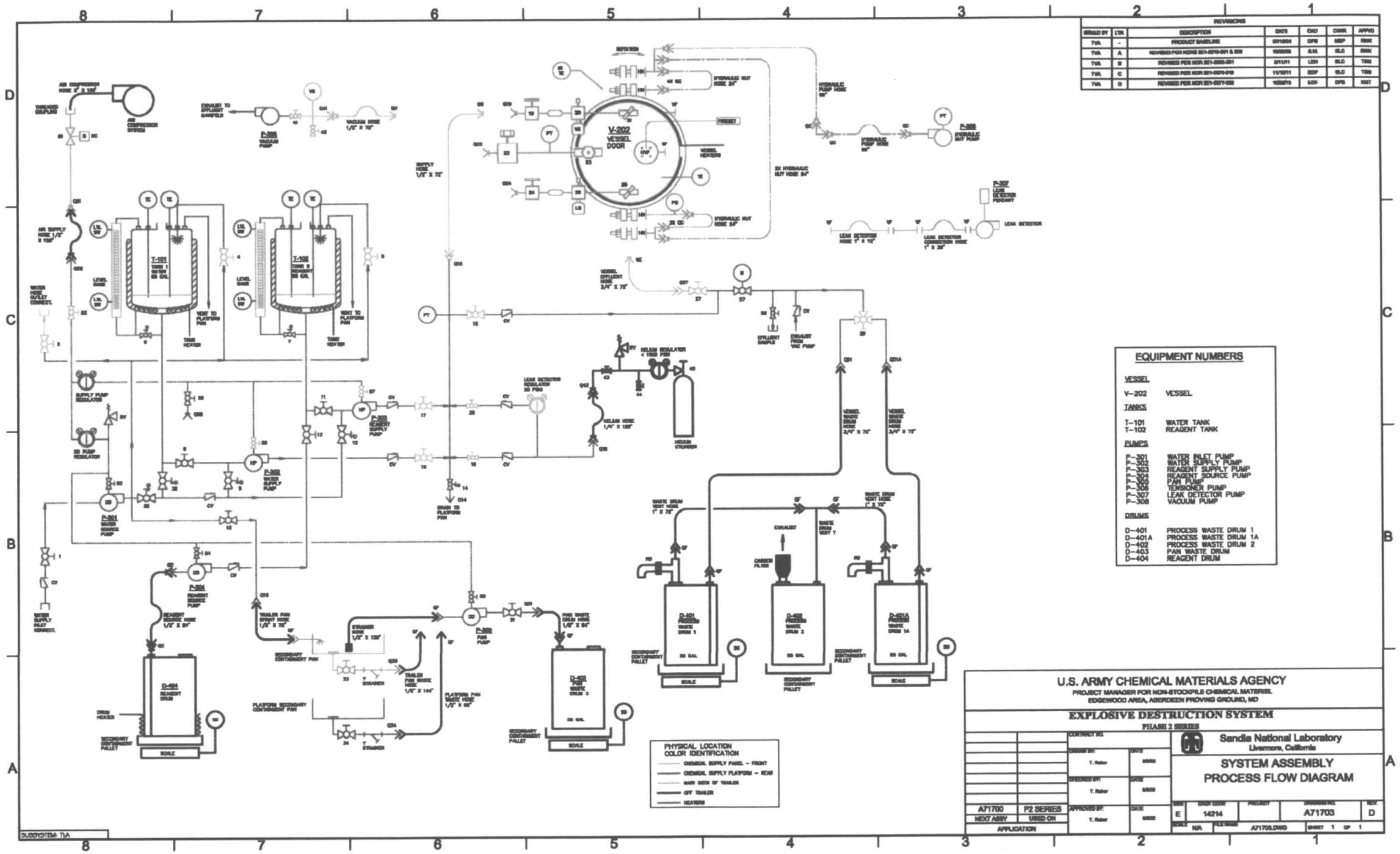

EQUIPMENT NUMBERS

VESSEL

V-202	VESSEL

TANKS

T-101	WATER TANK
T-102	REAGENT TANK

PUMPS

P-301	WATER INLET PUMP
P-302	WATER SUPPLY PUMP
P-303	REAGENT SUPPLY PUMP
P-304	REAGENT SOURCE PUMP
P-305	PAN PUMP
P-306	TENSIONER PUMP
P-307	LEAK DETECTOR PUMP
P-308	VACUUM PUMP

DRUMS

D-401	PROCESS WASTE DRUM 1
D-401A	PROCESS WASTE DRUM 1A
D-402	PROCESS WASTE DRUM 2
D-403	PAN WASTE DRUM
D-404	REAGENT DRUM

PHYSICAL LOCATION COLOR IDENTIFICATION

- CHEMICAL SUPPLY PANEL – FRONT
- CHEMICAL SUPPLY PLATFORM – REAR
- BARE DECK OF TRAILER
- OFF TRAILER
- HEATERS

U.S. ARMY CHEMICAL MATERIALS AGENCY

PROJECT MANAGER FOR NON-STOCKPILE CHEMICAL MATERIEL
EDGEWOOD AREA, ABERDEEN PROVING GROUND, MD

EXPLOSIVE DESTRUCTION SYSTEM

PHASE 2 SERIES

Sandia National Laboratory
Livermore, California

SYSTEM ASSEMBLY PROCESS FLOW DIAGRAM

CONTRACT NO.			
DRAWN BY: T. Huber	DATE: 8/8/02		
CHECKED BY: T. Huber	DATE: 8/8/02		
APPROVED BY: T. Huber	DATE: 8/8/02		
A71700	P2 SERIES		
NEXT ASSY	USED ON		
APPLICATION			

SIZE	CAGE CODE	PROJECT	DRAWING NO.	REV
E	14214		A71703	D
SCALE N/A	FILE NAME A71703.DWG		SHEET 1 OF 1	

ALABAMA LICENSED 32143-E PROFESSIONAL ENGINEER JERRY L. BLEVINS 12/17/13

REV STATUS OF SHEETS	REV																	
	SH																	

CONTRACT NUMBER W911SR-07-D-0001	TASK NUMBER I-11-CMA-250	leidos National Security Sector
UNLESS OTHERWISE SPECIFIED– DIMENSIONS ARE IN INCHES ASME Y14.100M APPLIES. TOLERANCES: .XX ±.02 .XXX ±.005 ∠ ±1° 125	DRAWN 02/13/2013 T. Thompson / CHK 02/13/2013 J. Blevins / TM APVD 02/13/2013 J. Blevins / 02/13/2013 J. Blevins	TITLE SYSTEM ASSEMBLY PROCESS FLOW DIAGRAM
MATERIAL — / FINISH —	APVD — / APVD —	SIZE D / CAGE CODE OWR61 / DWG. NO. A71703 / REV D
NEXT ASSY —	USED ON —	SCALE NTS / SHEET 1 of 1

FILE NAME: A71703
SOFTWARE: – VERSION: –

D A71703 REV D

REVISIONS			
REV	DESCRIPTION	DATE	APPROVED

REVISIONS						
ISSUE/CHNG	LTR	DESCRIPTION	DATE	CAD	CHKR	APPVD
TVA	B	REVISED PER NORS 2E1-0019-001, 009, 010, 011, 012, 013	10/25/09	LEH	SLC	RWK
TVA	C	REVISED PER NOR 2E1-0046-013	09/29/09	ADM	SLC	TSM
TVA	D	REVISED PER NOR 2E1-0063-002	02/11/11	LEH	SLC	TSM
TVA	E	REVISED PER NOR 2E1-0070-017	11/10/11	DPB	SLC	TSM

INSTRUMENTS AND ELECTRICAL SYMBOLS

PANEL MOUNTED CONTROLLERS AND READOUTS

- PR — PR PRESSURE READOUT – WATLOW 96
- TSC — TSC TEMPERATURE SETPOINT CONTROLLER – WATLOW 96
- TLC — TLC TEMPERATURE LIMITS CONTROLLER – WATLOW 97
- VRC — VRC VESSEL ROTATION CONTROLLER – SEW
- CMC — CMC CLAMP MOTOR CONTROLLER
- TR — TR TEMPERATURE CONTROLLER COOPER ATKINS

PANEL MOUNTED SELECTOR SWITCHES

- XX XX — 2 POSITION SWITCH
  - TENSIONER PRESSURE SELECTION — LOW – HIGH
  - HANGER SPEED — FAST – SLOW
  - TEMPERATURE SELECTION — AUTO – MANUAL
- XX OFF XX — 3 POSITION KEY SWITCH (KEY REMOVED IN OFF ONLY)
  - VESSEL ROTATION MODE — AUTO – MANUAL
  - HANGER CONTROL — LOCAL – PENDANT
- ROTATION INTERLOCKS BYPASS ON — 2 POSITION KEY SWITCH ROTATION INTERLOCK – MODE SELECTION

PANEL MOUNTED PUSH BUTTON SWITCH W/LIGHT

ID	FUNCTION	ID	COLOR
OFF	OFF	R	RED
ON	ON	G	GREEN
RST	RESET	A	AMBER
HLT	HALT		
HM	HOME		
ROT	ROTATE		
DR	DRAIN		
DF/R	DRIVE FAULT / RESET		
FILL	FILL		
IN	IN		
OUT	OUT		

PANEL MOUNTED PUSH BUTTON SWITCH WO/LIGHT

ID	FUNCTION
TS	TEMPERATURE SELECT PUSHBUTTON
RET	HYDRAULIC NUT RETRACT
ADV	HYDRAULIC NUT ADVANCE

PANEL MOUNTED INDICATOR LIGHT

ID	FUNCTION	ID	COLOR
IR	INTERLOCKS READY	R	RED
CIR	CLAMP INTERLOCKS READY	G	GREEN
IBP	INTERLOCKS BYPASSED	A	AMBER
AR	AUTO DRIVE CONTROL READY		
MR	MANUAL DRIVE CONTROL READY		
HS	HANGERS STORED		
HC	HANGERS CLOSED		
OP	OPEN		
CL	CLOSED		
HP	HOSE PARKED		
TH	TEMPERATURE HIGH		
LH	LEVEL HIGH		
LL	LEVEL LOW		
RFF	RF SYSTEM FAULT		
RFS	RF SYSTEM SIGNAL		
480	480 VAC ALARM		
208	208 VAC ALARM		
PC	POWER CONDITIONER		

SAFETY INTERLOCKS

ID	FUNCTION
P	PROCESS SHUTDOWN W / RED LIGHT
HI	HEATER INTERLOCK
RI	ROTATION INTERLOCK
SVI	SHUTOFF VALVE INTERLOCK
TPI	TENSIONER PUMP INTERLOCK

INSTRUMENT LOCALLY MOUNTED

ID	FUNCTION
PT	PRESSURE TRANSMITTER
TE	TEMPERATURE ELEMENT
VG	VACUUM GAGE
SG	SCALE GAGE
PG	PRESSURE GAGE
IRTE	INFRARED TEMPERATURE ELEMENT
PX	PROXIMITY SWITCH
HPS	HIGH PRESSURE SWITCH
LPS	LOW PRESSURE SWITCH
LVL SW	LEVEL SWITCH

CONTROL BUTTONS LOCALLY MOUNTED

ID	FUNCTION
LDP	LEAK DETECTOR PENDANT
ADV	TENSIONER PENDANT
IN	HANGER OPERATION PENDANT
ADC	ADD COUNTERCLOCKWISE
ADC	ADD CLOCKWISE
CW	ROTATE COUNTERCLOCKWISE
CW	ROTATE CLOCKWISE
STOP	STOP ROTATION

OTHER INSTRUMENTATION

- RFR — AT UTILITY PANEL — RADIO FREQUENCY RECEIVER
- RFT — AT VESSEL DOOR — RADIO FREQUENCY TRANSMITTER (24 VDC)
- P8, J8 — ELECTRICAL JACK AND PLUG CONNECTOR
- M — ANNUNCIATOR
- HVF — HIGH VOLTAGE FEEDTHRU FLANGE

POWER OTHER THAN 120 HARDWIRED

- 24 VDC — BATTERY POWER SUPPLY
- 480 VAC — HARDWIRED 480 VAC
- 120 VAC — DEDICATED 120 VAC SWITCHED OUTLET

PLUMBING AND MECHANICAL SYMBOLS

- 1/4" BALL VALVE
- 3/8" BALL VALVE
- 1/2" BALL VALVE
- 3/4" BALL VALVE
- 3/8" BALL VALVE PINNED HANDLE
- 3/4" BALL VALVE PINNED HANDLE
- 3/4" BALL VALVE 3 WAY
- M — 120 VAC — 3/4" BALL VALVE 120 VAC ELECTRIC MOTOR ACTUATOR
- 120 VAC — MO — S — NC — 3/4" SOLENOID VALVE NORMALLY CLOSED W/MANUAL OVERRIDE
- 3/8" MEDIUM PRESSURE (20,000 PSI) 2 WAY STRAIGHT VALVE
- 3/4" MEDIUM PRESSURE (20,000 PSI) 3 WAY STRAIGHT VALVE
- 3/8" MEDIUM PRESSURE (20,000 PSI) 2 WAY ANGLE VALVE
- 3/4" MEDIUM PRESSURE (20,000 PSI) 2 WAY ANGLE VALVE
- LS — SAMPLE BOTTLE ASSEMBLY
- CV — CHECK VALVE
- RV — RELIEF VALVE (PRESSURE SETTING)
- QC — QUICK CONNECT BODY – SHUTOFF
- QC — QUICK CONNECT BODY – FULL FLOW
- QC — QUICK CONNECT STEM – SHUTOFF
- QC — QUICK CONNECT STEM – FULL FLOW
- VF — VACUUM FLANGE
- SAMPLE FLUSH VOLUME
- FAN SPRAY NOZZLE
- TANK SPRAY NOZZLE
- RD — RUPTURE DISC ASSEMBLY 10 PSI W/BURST INDICATION
- PUMPS, COMPRESSOR
- HN — HYDRAULIC NUT ASSEMBLY
- SG — SCALE GAGE – HYDRAULIC
- SCALE — SCALE, 1000 LBS. 3% HYDRAULIC
- HTR — HEATER

LINE TYPES

- PROCESS FLUID
- COMPRESSED AIR
- HYDRAULIC FLUID
- HELIUM / VACUUM / LEAK DETECTOR
- ELECTRICAL VDC / CONTROL
- ELECTRICAL 120 / 480 VAC

EQUIPMENT NUMBERS

VESSEL	
V-202	VESSEL
TANKS	
T-101	WATER TANK
T-102	REAGENT TANK
PUMPS	
P-301	WATER INLET PUMP
P-302	WATER SUPPLY PUMP
P-303	REAGENT SUPPLY PUMP
P-304	REAGENT SOURCE PUMP
P-305	PAN PUMP
P-306	TENSIONER NUT PUMP
P-307	LEAK DETECTOR PUMP
P-308	VACUUM PUMP
DRUMS	
D-401	PROCESS WASTE DRUM 1
D-401A	PROCESS WASTE DRUM 1A
D-402	PROCESS WASTE DRUM 2
D-403	PAN WASTE DRUM
D-404	REAGENT DRUM

U.S. ARMY CHEMICAL MATERIALS AGENCY
PROJECT MANAGER FOR NON-STOCKPILE CHEMICAL MATERIEL
EDGEWOOD AREA, ABERDEEN PROVING GROUND, MD

EXPLOSIVE DESTRUCTION SYSTEM
PHASE 2 SERIES

Sandia National Laboratories
Livermore, California

SYSTEM ASSEMBLY
PIPING & INSTRUMENTATION
DIAGRAM

CONTRACT NO.			
DRAWN BY: T. RABER	DATE 11/26/02		
CHECKED BY: T. RABER	DATE 11/26/02		
APPROVED BY: T. RABER	DATE 11/26/02		
A71700	P2 SERIES		
NEXT ASSY	USED ON		
APPLICATION			

SIZE	CAGE CODE	PROJECT	DRAWING NO.	REV
D	14214		A71704	E
SCALE NONE	FILE NAME A71704-1.DWG		SHEET 1 OF 5	

SUBSYSTEM: TLA

ALABAMA LICENSED No. 32143-E PROFESSIONAL ENGINEER JERRY L. BLEVINS

FILE NAME: A71704-sh1	
SOFTWARE: – VERSION: –	
–	–
–	–
NEXT ASSY	USED ON

REV STATUS OF SHEETS	REV		
	SH		
CONTRACT NUMBER W911SR-12-D-0006	TASK NUMBER D-0019	leidos National Security Sector	
UNLESS OTHERWISE SPECIFIED– DIMENSIONS ARE IN INCHES ASME Y14.100M APPLIES	DRAWN 08/26/2014 T. Thompson	CHK 08/26/2014 J. Blevins	TITLE SYSTEM ASSEMBLY PIPING & INSTRUMENTATION DIAGRAM
TOLERANCES: .XX ±.02 .XXX ±.005 ∠ ±1° 125	TM APVD 08/26/2014 J. Blevins	08/26/2014 J. Blevins	
MATERIAL –	APVD –		SIZE D / CAGE CODE 0WR61 / DWG. NO. A71704 / REV E
FINISH –	APVD –		SCALE NTS / SHEET 1 of 5

D A71704 E

REVISIONS			
REV	DESCRIPTION	DATE	APPROVED

REVISIONS						
ISSUED BY	LTR	DESCRIPTION	DATE	CKD	CHKR	APPVD
TVA	E	SEE SHEET 1	11/10/11	EDF	SLC	TSM

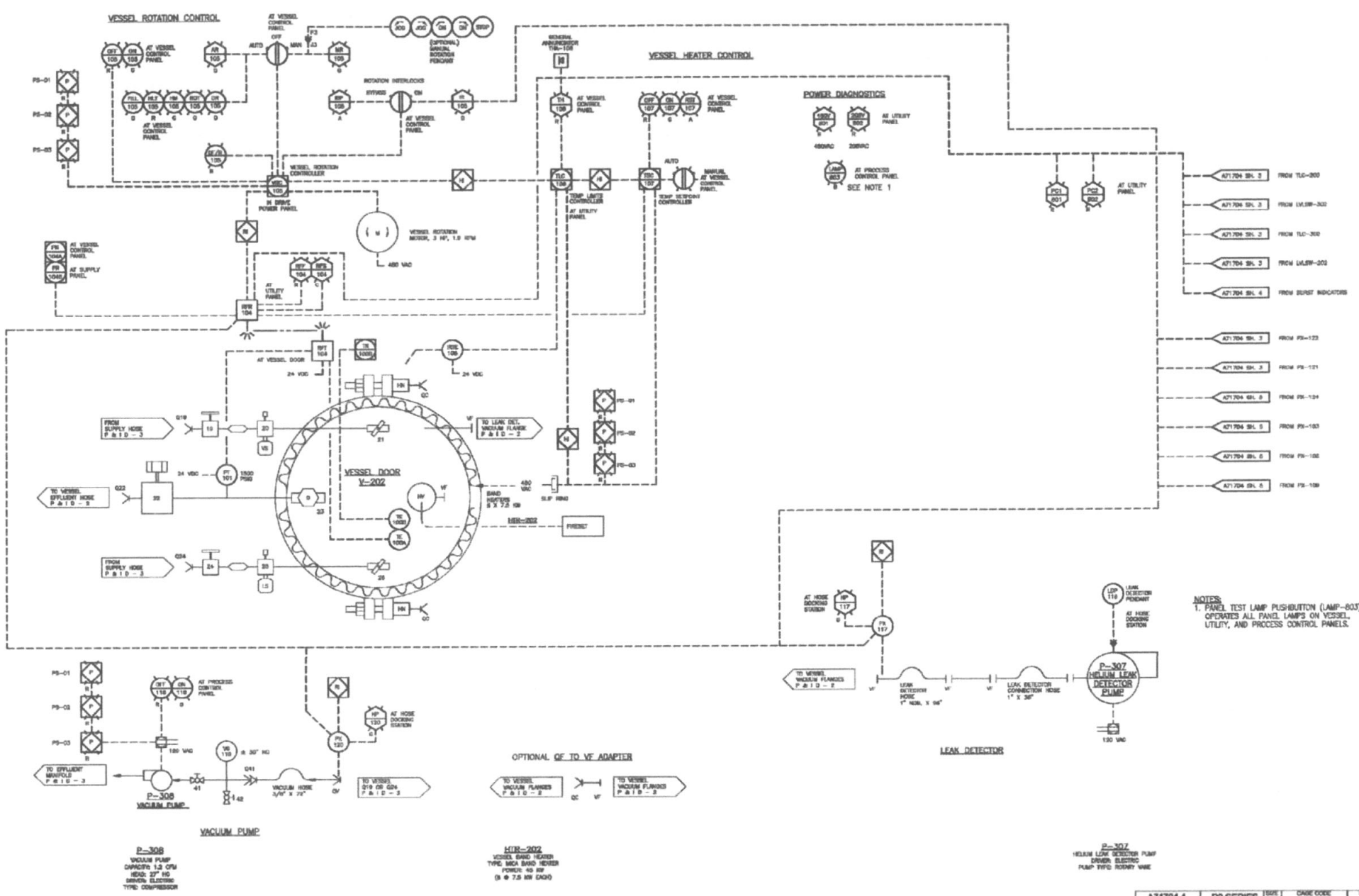

A71704-1	P2 SERIES	SIZE	CAGE CODE	PROJECT	DRAWING NO.	REV.
NEXT ASSY	USED ON	D	14214		A71704	E
APPLICATION		SCALE NONE	FILE NAME A71704_2.DWG		SHEET 2 OF 5	

SUBSYSTEM: TLA

REV STATUS OF SHEETS	REV																	
	SH																	

CONTRACT NUMBER: W911SR-12-D-0006

TASK NUMBER: D-0019

leidos National Security Sector

UNLESS OTHERWISE SPECIFIED— DIMENSIONS ARE IN INCHES ASME Y14.100M APPLIES

TOLERANCES: .XX ±.02 .XXX ±.005 ∠ ±1° 125

DRAWN 08/26/2014 T. Thompson | CHK 08/26/2014 J. Blevins | TM APVD 08/26/2014 J. Blevins | APVD 08/26/2014 J. Blevins | APVD — | APVD —

MATERIAL —

FINISH —

TITLE: SYSTEM ASSEMBLY PIPING & INSTRUMENTATION DIAGRAM

SIZE	CAGE CODE	DWG. NO.	REV
D	OWR61	A71704	E

SCALE NTS | SHEET 2 of 5

FILE NAME: A71704-sh2
SOFTWARE: — VERSION: —

NEXT ASSY	USED ON
—	—
—	—

D A71704

REVISIONS			
REV	DESCRIPTION	DATE	APPROVED

REVISIONS						
ISSUED BY	LTR	DESCRIPTION	DATE	CAD	CHKR	APPVD
TVA	E	SEE SHEET 1	11/10/11	EDF	SLC	TSM

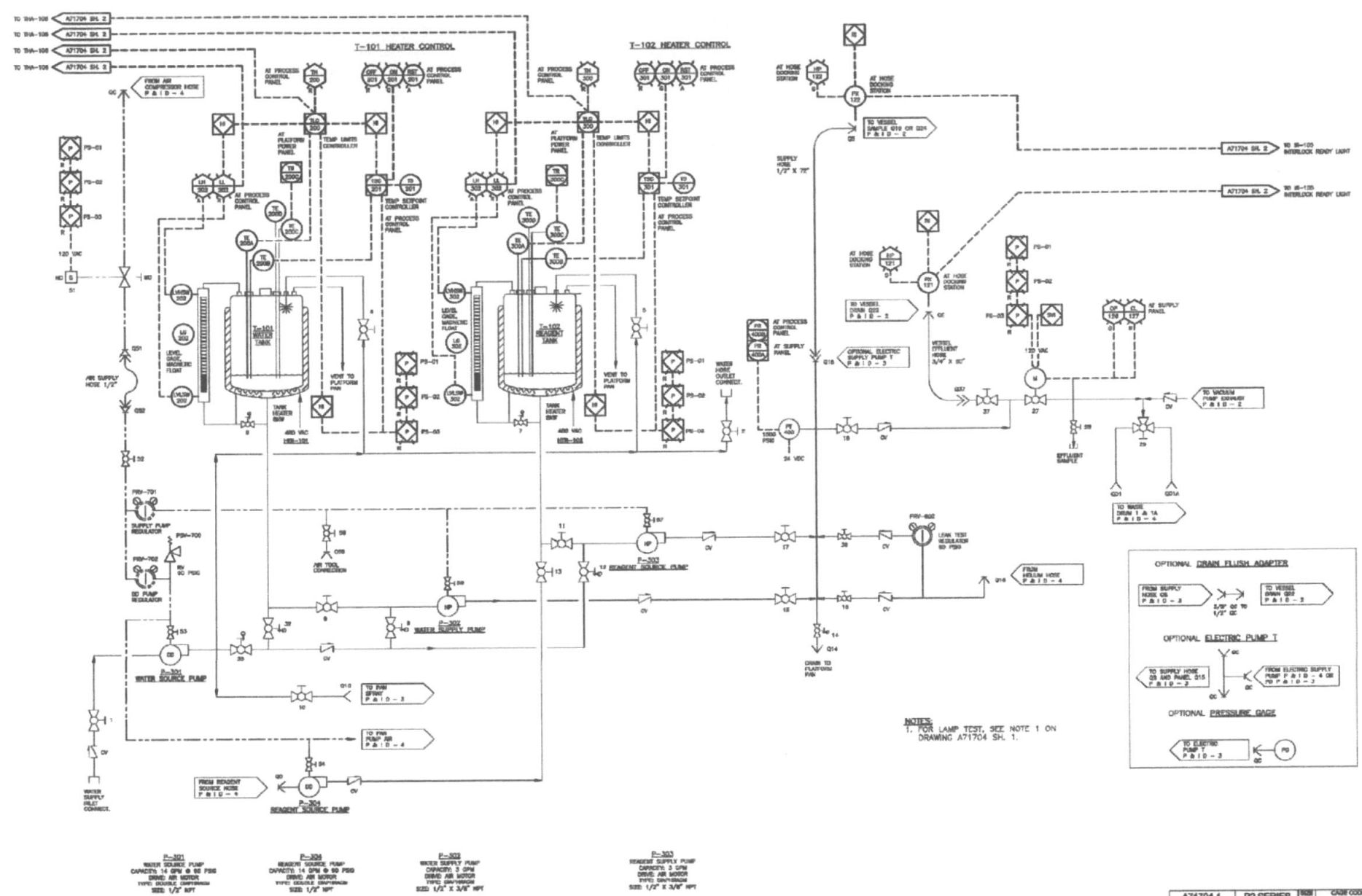

A71704-1	P2 SERIES	SIZE D	CAGE CODE 14214	PROJECT	DRAWING NO. A71704	REV. E
NEXT ASSY	USED ON					
APPLICATION		SCALE NONE	FILE NAME A71704_3.DWG		SHEET 3 OF 5	

SUBSYSTEM: TLA

REV STATUS OF SHEETS	REV																	
	SH																	

CONTRACT NUMBER W911SR-12-D-0006

TASK NUMBER D-0019

leidos National Security Sector

UNLESS OTHERWISE SPECIFIED— DIMENSIONS ARE IN INCHES ASME Y14.100M APPLIES

TOLERANCES: .XX ±.02 .XXX ±.005 ∠ ±1° 125

DRAWN 08/26/2014 T. Thompson | CHK 08/26/2014 J. Blevins | TM APVD 08/26/2014 J. Blevins | 08/26/2014 J. Blevins

TITLE SYSTEM ASSEMBLY PIPING & INSTRUMENTATION DIAGRAM

MATERIAL — | APVD —

FINISH — | APVD —

SIZE D | CAGE CODE 0WR61 | DWG. NO. A71704 | REV E

SCALE NTS | SHEET 3 of 5

FILE NAME: A71704-sh3

SOFTWARE: — VERSION: —

NEXT ASSY	USED ON
—	—
—	—

D A71704

REVISIONS			
REV	DESCRIPTION	DATE	APPROVED

REVISIONS						
ISSUED BY	LTR	DESCRIPTION	DATE	CKD	CHKD	APPVD
TVA	E	SEE SHEET 1	11/10/11	LBH	B.L.C	TBM

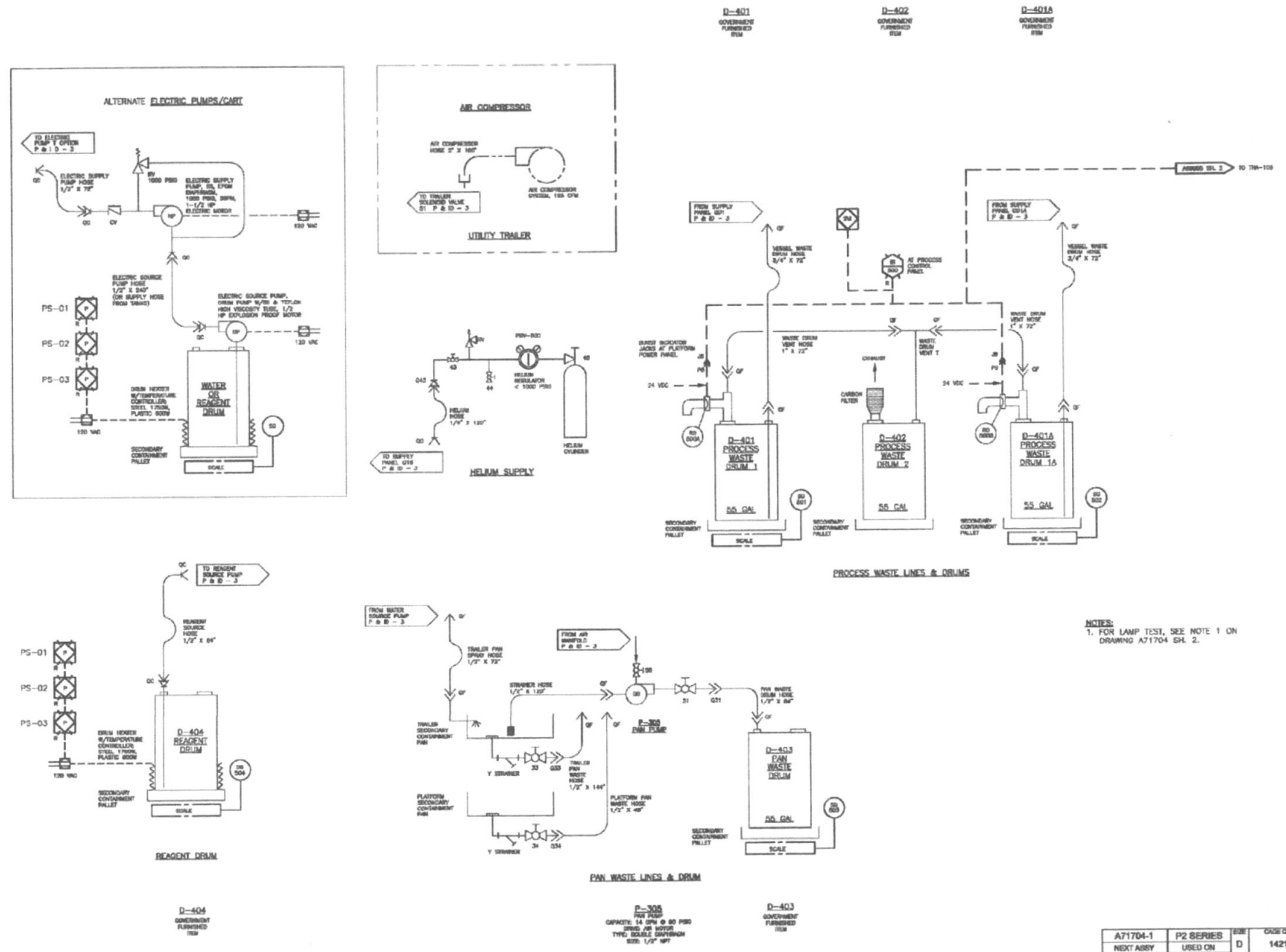

NOTES:
1. FOR LAMP TEST, SEE NOTE 1 ON DRAWING A71704 SH. 2.

A71704-1	P2 SERIES	SIZE D	CAGE CODE 14214	PROJECT	DRAWING NO. A71704	REV E
NEXT ASSY	USED ON					
APPLICATION		SCALE NONE	FILE NAME A71704_4.DWG		SHEET 4 OF 5	

SUBSYSTEM: TLA

REV STATUS OF SHEETS	REV																
	SH																

CONTRACT NUMBER W911SR-12-D-0006	TASK NUMBER D-0019	leidos National Security Sector	
UNLESS OTHERWISE SPECIFIED-DIMENSIONS ARE IN INCHES ASME Y14.100M APPLIES. TOLERANCES: .XX ±.02 .XXX ±.005 ∠ ±1° 125	DRAWN 08/26/2014 T. Thompson / CHK 08/26/2014 J. Blevins / TM APVD 08/26/2014 J. Blevins / 08/26/2014 J. Blevins	TITLE SYSTEM ASSEMBLY PIPING & INSTRUMENTATION DIAGRAM	
MATERIAL —	APVD —	SIZE D	CAGE CODE OWR61 / DWG. NO. A71704 / REV E
FINISH —	APVD —	SCALE NTS	SHEET 4 of 5

FILE NAME: A71704-sh4	
SOFTWARE: — VERSION: —	
—	—
—	—
NEXT ASSY	USED ON

D A71704

REVISIONS						
REVISED BY	LTR	DESCRIPTION	DATE	CAD	CHKR	APPRD
TVA	E	SEE SHEET 1	11/10/11	LBH	SLC	TSM

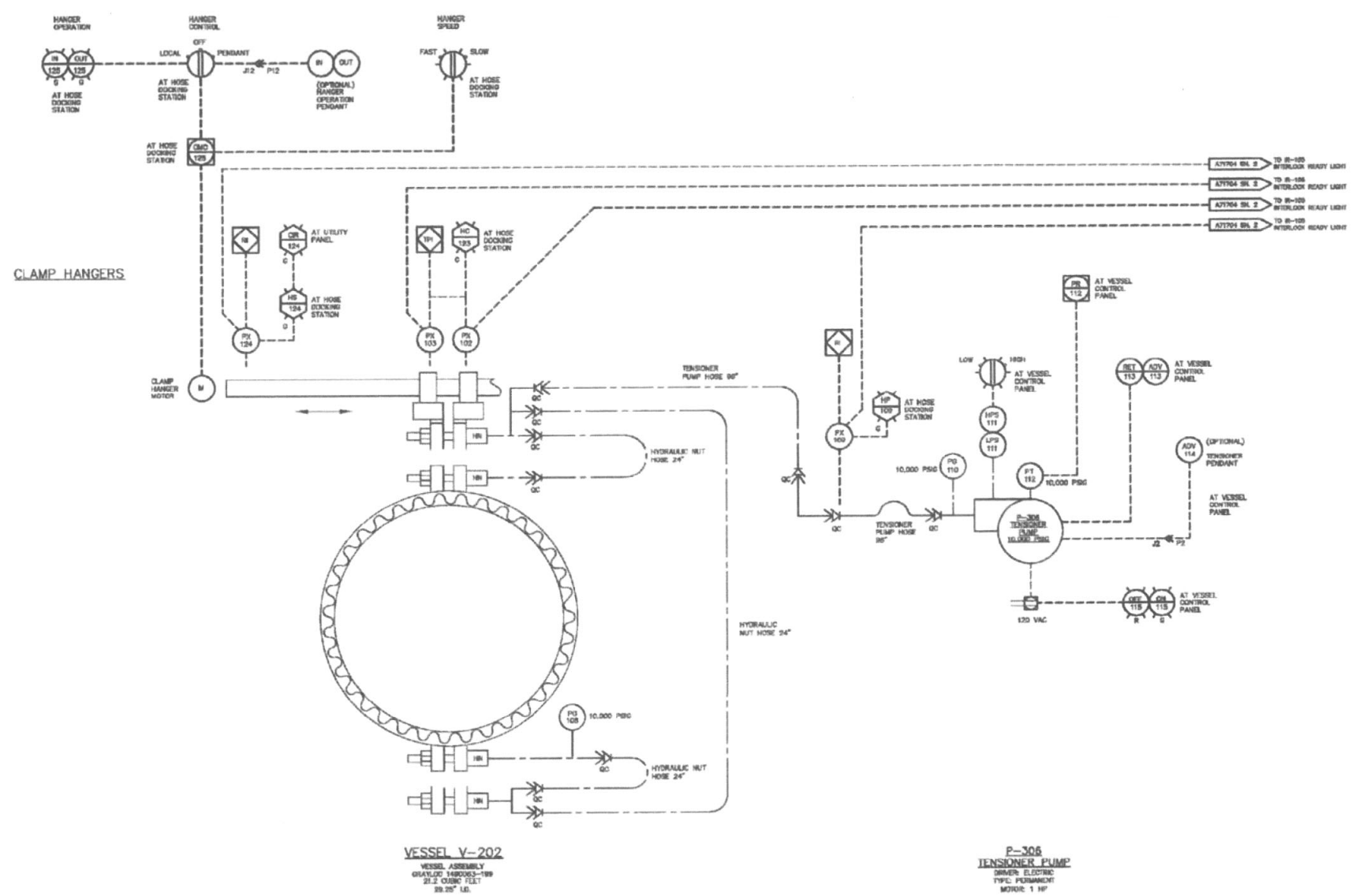

A71704-1	P2 SERIES	SIZE D	CAGE CODE 14214	PROJECT	DRAWING NO. A71704	REV. E
NEXT ASSY	USED ON					
APPLICATION		SCALE NONE	FILE NAME A71704_5.DWG	SHEET 5 OF 5		

SUBSYSTEM: TLA

REVISIONS				
REV	DESCRIPTION	DATE	APPROVED	

REV STATUS OF SHEETS	REV															
	SH															

CONTRACT NUMBER W911SR-12-D-0006	TASK NUMBER D-0019	leidos National Security Sector
UNLESS OTHERWISE SPECIFIED- DIMENSIONS ARE IN INCHES ASME Y14.100M APPLIES	DRAWN 08/26/2014 T. Thompson / CHK 08/26/2014 J. Blevins	TITLE SYSTEM ASSEMBLY PIPING & INSTRUMENTATION DIAGRAM
TOLERANCES: .XX ±.02 .XXX ±.005 ∠ ±1° 125	TM APVD 08/26/2014 J. Blevins / 08/26/2014 J. Blevins	
MATERIAL —	APVD —	SIZE D / CAGE CODE OWR61 / DWG. NO. A71704 / REV E
FINISH —	APVD —	SCALE NTS / SHEET 5 of 5

FILE NAME: A71704-sh5	
SOFTWARE: –	VERSION: –
–	–
–	–
NEXT ASSY	USED ON

FOLD LINE

REV E

D A71704

REVISIONS			
REV	DESCRIPTION	DATE	APPROVED

NOTES:

1. MATERIAL: SEE PARTS LIST BELOW.
2. ITEM 3 ("FRAME HANDLES") ARE RE-USABLE.

REVISIONS						
ISSUED BY	LTR	DESCRIPTION	DATE	CAD	CHKR	APPVD
TVA	-	PRODUCT BASELINE	07/19/04	DPB	MSP	RWK
TVA	A	REVISED PER NOR 2E1-0092-068	12/07/04	DPB	MSP	RWK
TVA	B	REVISED PER NOR 2E1-0015-001	10/29/08	EDF	SLC	RWK
TVA	C	REVISED PER NOR 2E1-0098-038	11/10/11	EDF	SLC	TSM

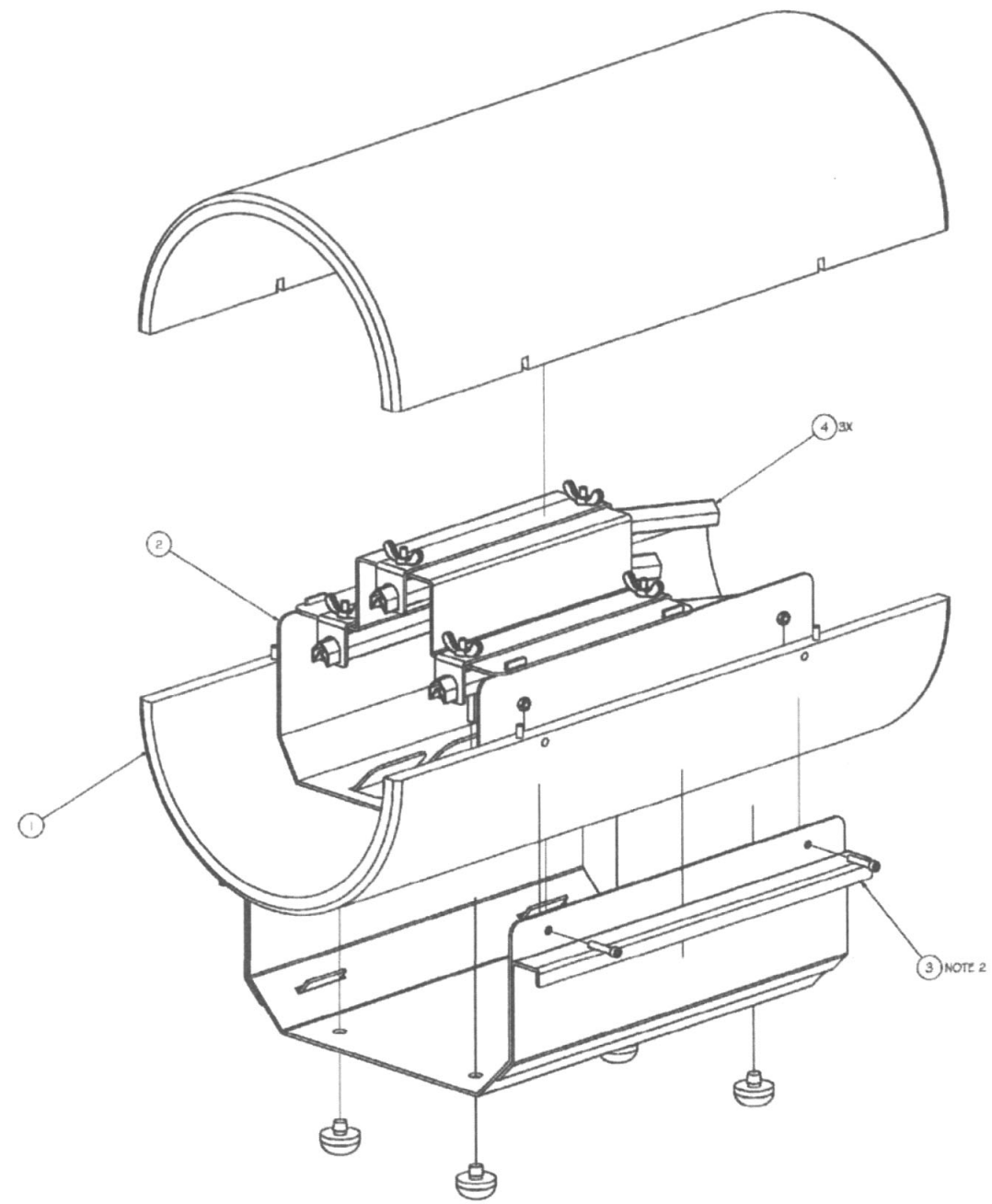

ITEM	QTY	PART NUMBER	DESCRIPTION	COMMENTS
4	3	A73764	MULTIPLE : 200G LSC	
3	2	A73747	MULTIPLE : 4" FRAME HANDLE	
2	1	A73740	4.2 3-PACK ASSEMBLY	
1	1	A73745	MULTIPLE CYLINDER ASSEMBLY	

Parts List

U.S. ARMY CHEMICAL MATERIALS AGENCY
PROJECT MANAGER FOR NON-STOCKPILE CHEMICAL MATERIEL
EDGEWOOD AREA, ABERDEEN PROVING GROUND, MD

EXPLOSIVE DESTRUCTION SYSTEM
PHASE 2 SERIES

ENERGY RESEARCH & TECHNOLOGY APPLICATIONS
ENVIRONMENTAL ENGINEERING SERVICES-WEST
MUSCLE SHOALS, ALABAMA

FRAG SUPPRESSION SYSTEM

4.2 3-PACK FSS ASSEMBLY

CONTRACT NO.	
DRAWN BY: D. SURNEY	DATE 06/15/2004
CHECKED BY: M. PATRICK	DATE 06/15/2004
APPROVED BY: R. KRUSLAND	DATE 06/15/2004

SIZE	CAGE CODE	PROJECT	DRAWING NO.	REV.
D	14214		A73751	C

SCALE: NONE FILE NAME: A73751.IDW SHEET 1 OF 1

A71700	P2 SERIES
NEXT ASSY	USED ON
APPLICATION	

SUBSYSTEM: EOS

ALABAMA LICENSED PROFESSIONAL ENGINEER JERRY L. BLEVINS No. 19143-E

–	–
–	–
NEXT ASSY	USED ON

FILE NAME: A73751
SOFTWARE: – VERSION: –

REV STATUS OF SHEETS: REV / SH

CONTRACT NUMBER: W911SR-12-D-0006

TASK NUMBER: D-0019

leidos National Security Sector

UNLESS OTHERWISE SPECIFIED– DIMENSIONS ARE IN INCHES ASME Y14.100M APPLIES

TOLERANCES: .XX ±.02 .XXX ±.005 ∠ ±1° 125

DRAWN	CHK
08/26/2014 T. Thompson	08/26/2014 J. Blevins
TM APVD	
08/26/2014 J. Blevins	08/26/2014 J. Blevins
APVD	
–	
APVD	
–	

MATERIAL –

FINISH –

TITLE: FRAG SUPPRESSION SYSTEM 4.2 3-PACK FSS ASSEMBLY

SIZE	CAGE CODE	DWG. NO.	REV
D	0WR61	A73751	C

SCALE NTS SHEET 1 of 1

D A73751 REV C

REVISIONS			
REV	DESCRIPTION	DATE	APPROVED

REVISIONS						
ISSUED BY	LTR	DESCRIPTION	DATE	CAD	CHKR	APPVD
TVA	-	PRODUCT BASELINE	07/16/04	DPB	MSP	RWK
TVA	A	REVISED PER NOR 2E1-0002-011	12/07/04	DPB	MSP	RWK
TVA	B	REVISED PER NOR 2E1-0018-001	10/25/06	EDF	SLC	RWK

NOTES:

1. MATERIAL: SEE PARTS LIST BELOW.
2. ITEM 2 (FRAME HANDLES) ARE RE-USABLE.

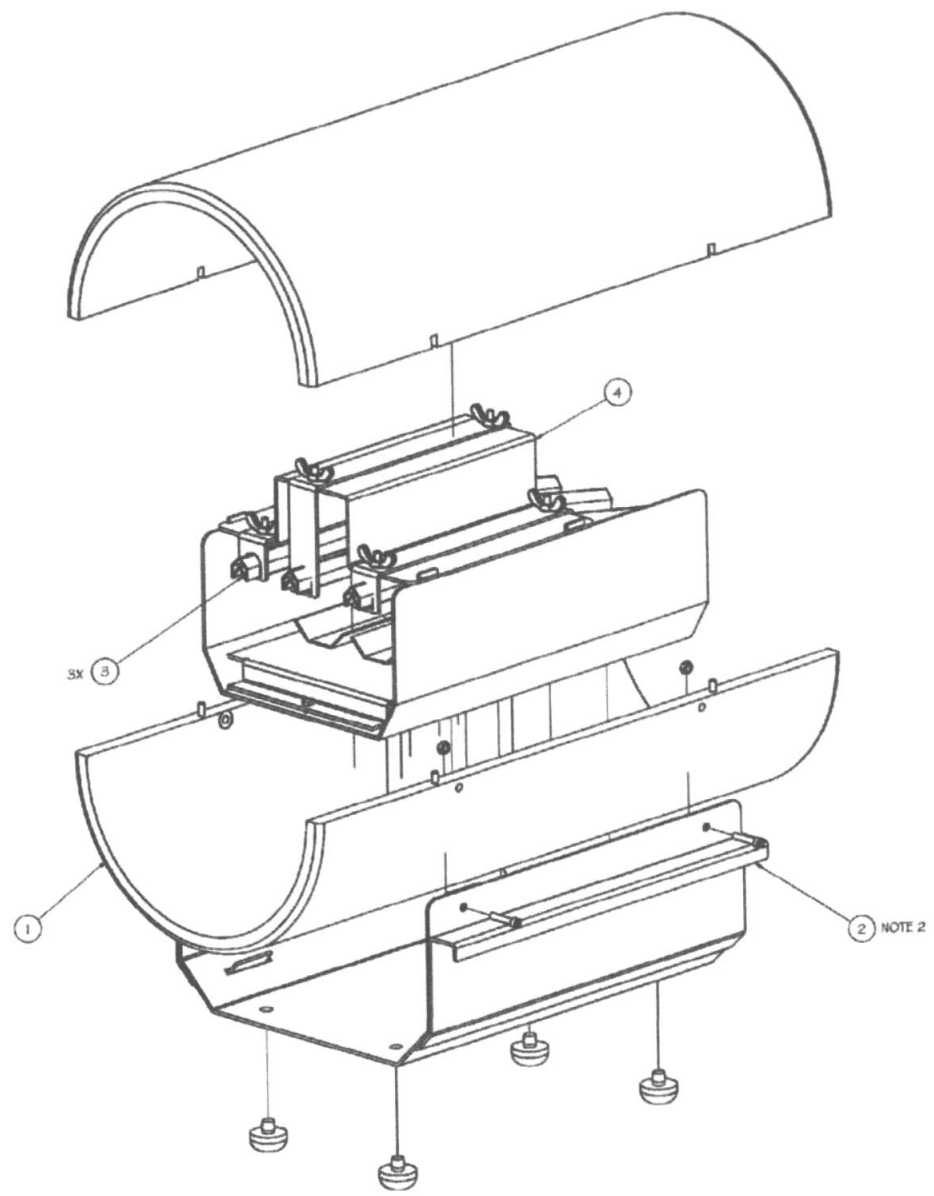

ITEM	QTY	PART NUMBER	DESCRIPTION	VENDOR
4	1	A73785	75MM MULTIPLE HOLDER ASSEMBLY	
3	3	A73764	MULTIPLE 1200G L5C	
2	2	A73747	MULTIPLE 14" FRAME HANDLE	
1	1	A73745	MULTIPLE CYLINDER ASSEMBLY	

Parts List

U.S. ARMY CHEMICAL MATERIALS AGENCY
PROJECT MANAGER FOR NON-STOCKPILE CHEMICAL MATERIEL
EDGEWOOD AREA, ABERDEEN PROVING GROUND, MD

EXPLOSIVE DESTRUCTION SYSTEM
PHASE 2 SERIES

ENERGY RESEARCH & TECHNOLOGY APPLICATIONS
ENVIRONMENTAL ENGINEERING SERVICES-WEST
MUSCLE SHOALS, ALABAMA

FRAG SUPPRESSION SYSTEM

75MM MULTIPLE KIT ASSEMBLY

CONTRACT NO.	
DRAWN BY: D. BURNEY	DATE 07/08/2004
CHECKED BY: M. PATRICK	DATE 07/08/2004
APPROVED BY: R. KIRKLAND	DATE 07/08/2004
SIZE D	CAGE CODE 88008
PROJECT	DRAWING NO. A73784
REV. B	
SCALE NONE	FILE NAME A73784.IDW
SHEET 1 OF 1	

A71700	P2 SERIES
NEXT ASSY	USED ON
APPLICATION	

SUBSYSTEM: EOS

ALABAMA LICENSED PROFESSIONAL ENGINEER JERRY L. BLEVINS No. 32143-E

REV STATUS OF SHEETS	REV																			
	SH																			

CONTRACT NUMBER W911SR-12-D-0006	TASK NUMBER D-0019	leidos National Security Sector
UNLESS OTHERWISE SPECIFIED— DIMENSIONS ARE IN INCHES ASME Y14.100M APPLIES	DRAWN 08/26/2014 T. Thompson	CHK 08/26/2014 J. Blevins
TOLERANCES: .XX ±.02 .XXX ±.005 ∠ ±1° 125	TM APVD 08/26/2014 J. Blevins	08/26/2014 J. Blevins
MATERIAL —	APVD —	TITLE FRAG SUPPRESSION SYSTEM 75MM MULTIPLE KIT ASSEMBLY
FINISH —	APVD —	

SIZE	CAGE CODE	DWG. NO.	REV
D	0WR61	A73784	B
SCALE NTS		SHEET 1 of 1	

FILE NAME: A73784	
SOFTWARE: —	VERSION: —
—	—
—	—
NEXT ASSY	USED ON

D A73784 REV B

REVISIONS			
REV	DESCRIPTION	DATE	APPROVED

NOTES:

1. MATERIAL: SEE PARTS LIST BELOW.

REVISIONS						
ISSUED BY	LTR	DESCRIPTION	DATE	CAD	CHKR	APPVD
TVA	B	REVISED PER NOR 2E1-0019-01	10/25/06	EDF	SLC	RWK
TVA	C	REVISED PER NOR 2E1-0042-003	11/30/07	ADM	SLC	RWK
TVA	D	REVISED PER NOR 2E1-0062-028	06/27/11	EDF/LEH	SLC	TSM

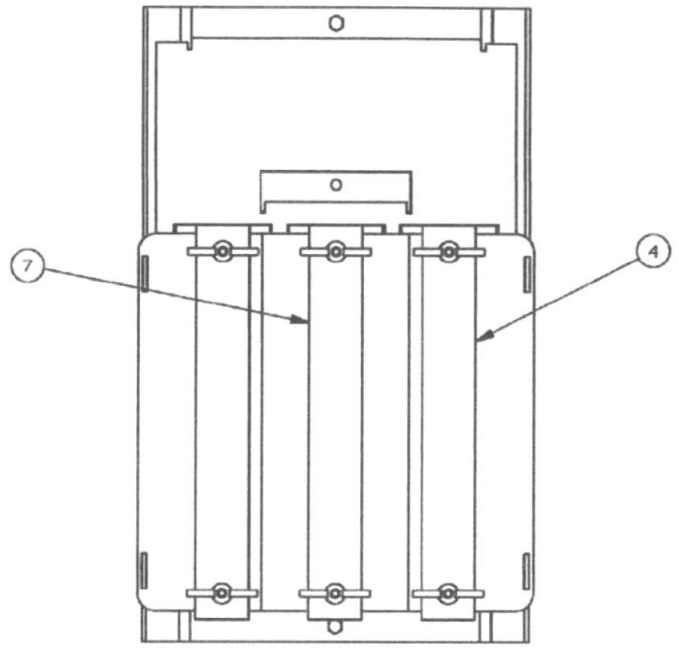

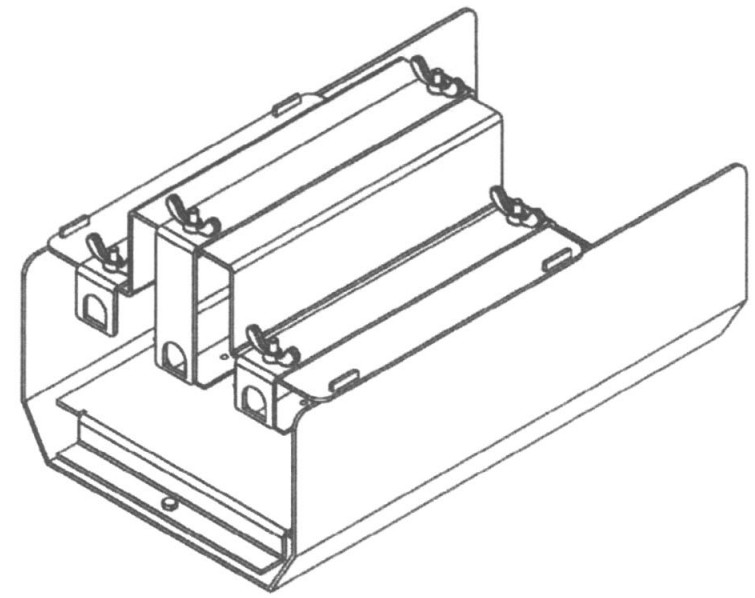

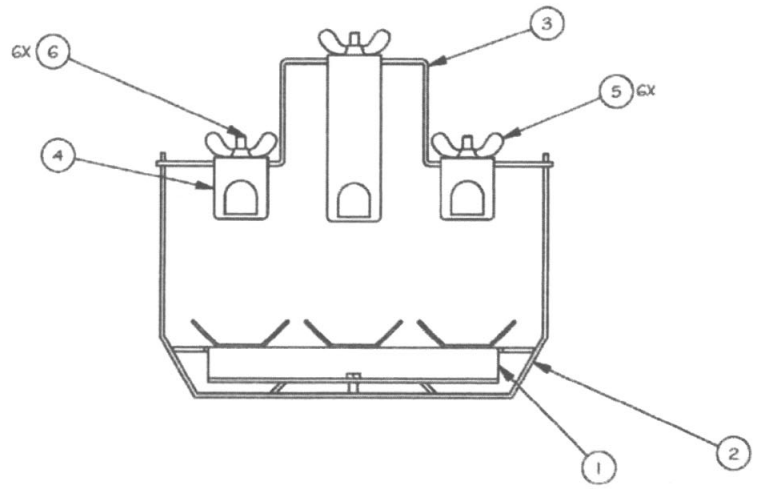

ITEM	QTY	PART NUMBER	DESCRIPTION	VENDOR
7	1	A73749	75MM 1200G MIDDLE LSC HOLDER	
6	6		1/4 -20 UNC CARRIAGE BOLT 3/4" LG, PLAIN CARBON STEEL	
5	6		1/4-20 UNC WING NUT	
4	2	A73744	1200G SHORT LSC HOLDER	
3	1	A73743	MULTIPLE TOP	
2	1	A73742	MULTIPLE BOTTOM	
1	1	A73748	75MM MULTIPLE KIT	

Parts List

U.S. ARMY CHEMICAL MATERIALS AGENCY
PROJECT MANAGER FOR NON-STOCKPILE CHEMICAL MATERIEL
EDGEWOOD AREA, ABERDEEN PROVING GROUND, MD

EXPLOSIVE DESTRUCTION SYSTEM
PHASE 2 SERIES

ENERGY RESEARCH & TECHNOLOGY APPLICATIONS
ENVIRONMENTAL ENGINEERING SERVICES-WEST
HUNTSVILLE, ALABAMA

FRAG SUPPRESSION SYSTEM

75MM MULTIPLE HOLDER ASSEMBLY

CONTRACT NO.	
DRAWN BY: D. BURNEY	DATE 07/08/2004
CHECKED BY: M.S. PATRICK	DATE 07/08/2004
APPROVED BY: R.W. KIRKLAND	DATE 07/08/2004
A73784 / NEXT ASSY	P3 SERIES / USED ON
APPLICATION	

SIZE	CAGE CODE	PROJECT	DRAWING NO.	REV.
D	88008		A73785	D
SCALE 1/2	FILE NAME A73785.IDW		SHEET 1 OF 1	

SUBSYSTEM: E05

ALABAMA LICENSED No. 32143-E PROFESSIONAL ENGINEER JERRY L. BLEVINS

REV STATUS OF SHEETS	REV															
	SH															

CONTRACT NUMBER W911SR-12-D-0006	TASK NUMBER D-0019	leidos National Security Sector
UNLESS OTHERWISE SPECIFIED- DIMENSIONS ARE IN INCHES ASME Y14.100M APPLIES	DRAWN 08/26/2014 T. Thompson / CHK 08/26/2014 J. Blevins	TITLE FRAG SUPPRESSION SYSTEM 75MM MULTIPLE HOLDER ASSEMBLY
TOLERANCES: .XX ±.02 .XXX ±.005 ∠ ±1° 125	TM APVD 08/26/2014 J. Blevins / 08/26/2014 J. Blevins	
MATERIAL —	APVD —	SIZE D / CAGE CODE OWR61 / DWG. NO. A73785 / REV D
FINISH —	APVD —	SCALE NTS / SHEET 1 of 1

FILE NAME: A73785	
SOFTWARE: —	VERSION: —
—	—
—	—
NEXT ASSY	USED ON

D A73785 REV D

NOTES:

1. MATERIAL: SEE PARTS LIST BELOW.

REVISIONS						
ISSUED BY	LTR	DESCRIPTION	DATE	DRD	CHKD	APPVD
TVA	-	INITIAL RELEASE PER NOR 2E1-0017-001	09/04/09	DPB	RSH	RWK
TVA	A	REVISED PER NOR 2E1-0019-001	10/25/06	ADM	SLC	RWK
TVA	B	REVISED PER NOR 2E1-0069-010	11/10/11	KJK	SLC	TSM

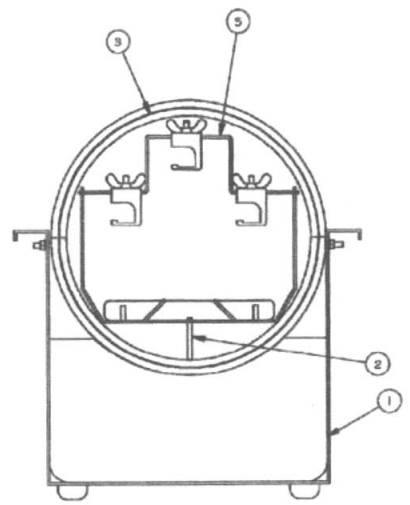

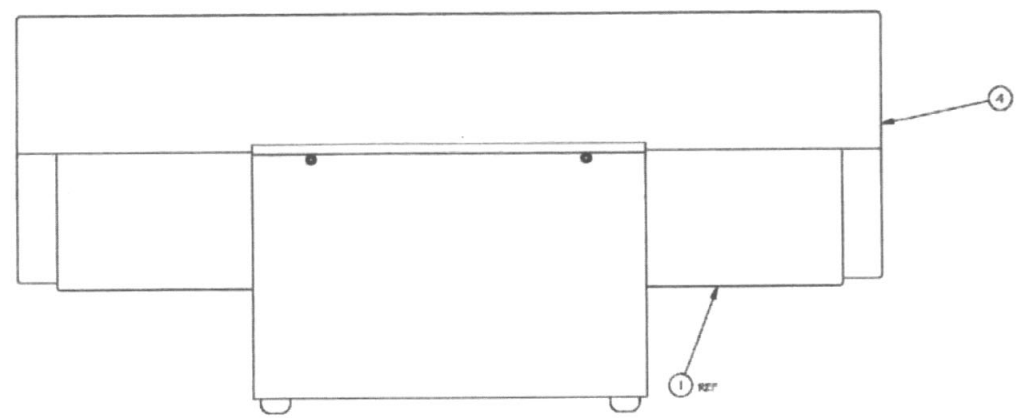

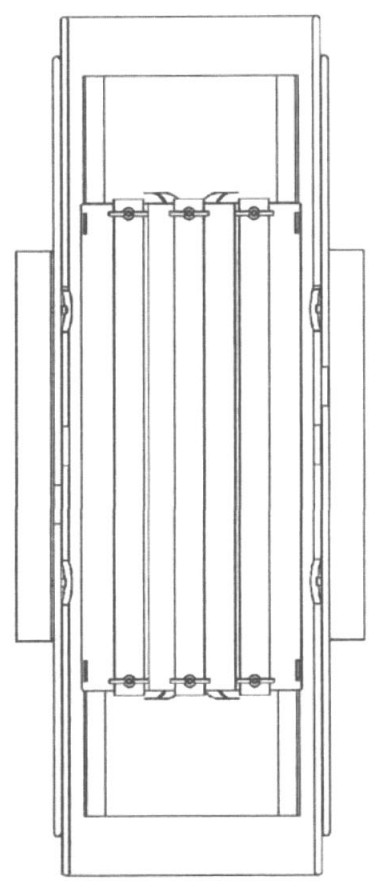

ITEMS 3 & 4 REMOVED FOR CLARITY

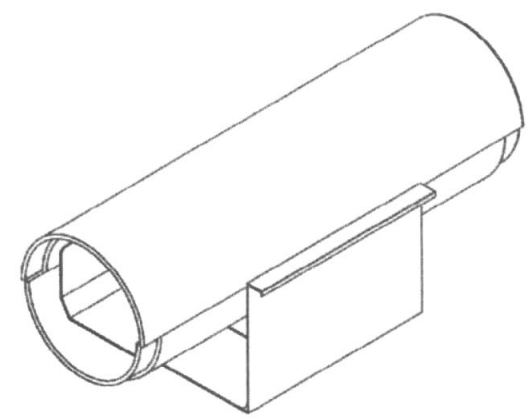

ITEM	QTY	PART NUMBER	DESCRIPTION	VENDOR
5	1	A76890	4.2 MORTAR 6-PACK HOLDER ASSEMBLY	
4	1	A74336	4.2 MORTAR 6-PACK TOP OUTER CYLINDER	
3	1	A74337	4.2 MORTAR 6-PACK TOP INNER CYLINDER	
2	1	A74335	4.2 MORTAR 6-PACK BOTTOM INNER CYLINDER	
1	1	A74338	4.2 MORTAR 6-PACK BOTTOM FRAME ASSEMBLY	

Parts List

U.S. ARMY CHEMICAL MATERIALS AGENCY
PROJECT MANAGER FOR NON-STOCKPILE CHEMICAL MATERIEL
EDGEWOOD AREA, ABERDEEN PROVING GROUND, MD

EXPLOSIVE DESTRUCTION SYSTEM
PHASE 2 SERIES

A74350	P2 SERIES
NEXT ASSY	USED ON
APPLICATION	

CONTRACT NO.

DRAWN BY: SCHWINGHAMMER DATE 08/21/2005

CHECKED BY: D COLE DATE 06/22/2005

APPROVED BY: J DIDLAKE DATE 06/22/2005

Sandia National Laboratory
Livermore, California

FRAG SUPPRESSION SYSTEM

4.2 MORTAR 6-PACK ASSEMBLY

SIZE	CAGE CODE	PROJECT	DRAWING NO.	REV.
E	14214		A74332	B

SCALE: NONE FILE NAME: A74332.IDW SHEET 1 OF 1

SUBSYSTEM: 205

REVISIONS				
REV	DESCRIPTION	DATE	APPROVED	

ALABAMA LICENSED No. 32183-E PROFESSIONAL ENGINEER JERRY L. BLEVINS

10/24/14

FILE NAME:	A74332
SOFTWARE:	-- VERSION: --
--	--
--	--
NEXT ASSY	USED ON

REV STATUS OF SHEETS	REV																	
	SH																	

CONTRACT NUMBER: W911SR-12-D-0006

TASK NUMBER: D-0019

leidos National Security Sector

UNLESS OTHERWISE SPECIFIED- DIMENSIONS ARE IN INCHES ASME Y14.100M APPLIES

TOLERANCES: .XX ±.02 .XXX ±.005 ∠ ±1° 125

DRAWN 08/26/2014 T. Thompson

CHK 08/26/2014 J. Blevins

TM APVD 08/26/2014 J. Blevins

APVD 08/26/2014 J. Blevins

MATERIAL --

APVD --

FINISH --

APVD --

TITLE: FRAG SUPPRESSION SYSTEM 4.2" MORTAR ASSEMBLY

SIZE	CAGE CODE	DWG. NO.	REV
D	0WR61	A74332	B

SCALE NTS SHEET 1 of 1

D A74332 REV B

REVISIONS			
REV	DESCRIPTION	DATE	APPROVED

NOTES:

1. MATERIAL: SEE PARTS LIST BELOW

REVISIONS						
ISSUED BY	LTR	DESCRIPTION	DATE	CAD	DWN	APP'D
TVA	-	INITIAL RELEASE PER NOR 2E1-0017-001	05/04/05	DPB	RSH	RWK
TVA	A	REVISED PER NOR 2E1-8019-001	10/05/06	ADM	SLC	RWK
TVA	B	REVISED PER NOR 2E1-8058-011	11/16/11	KJK	SLC	TSM

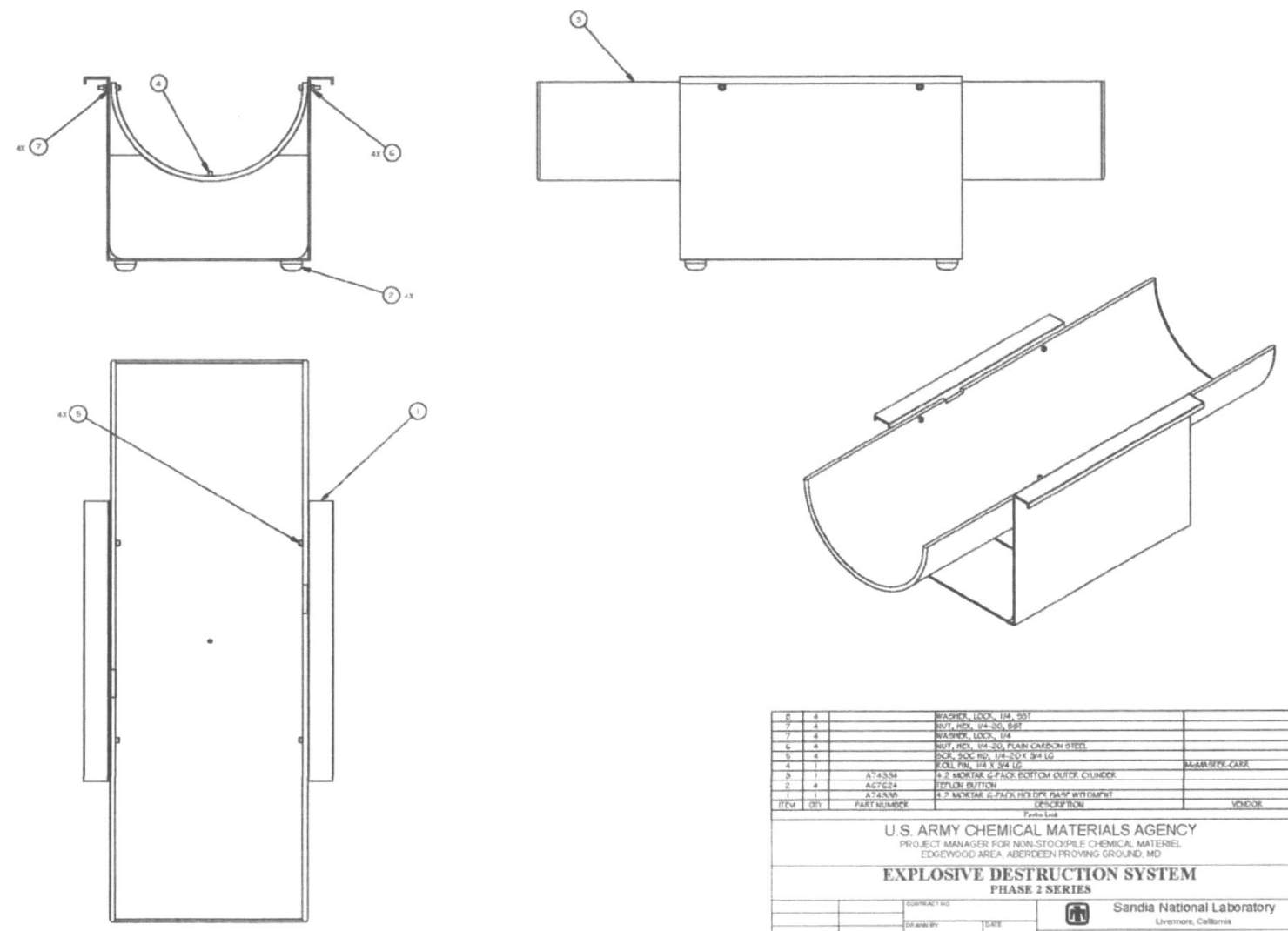

ITEM	QTY	PART NUMBER	DESCRIPTION	VENDOR
8	4		WASHER, LOCK, 1/4, SST	
7	4		NUT, HEX, 1/4-20, SST	
7	4		WASHER, LOCK, 1/4	
6	4		NUT, HEX, 1/4-20, PLAIN CARBON STEEL	
5	4		SCR, SOC HD, 1/4-20 X 3/4 LG	
4	1		ROLL PIN, 1/4 X 3/4 LG	McMASTER-CARR
3	1	A74334	4.2 MORTAR 6-PACK BOTTOM OUTER CYLINDER	
2	4	AG7E24	TEFLON BUTTON	
1	1	A74333	4.2 MORTAR 6-PACK BOTTOM FRAME WITDMNT	

Parts List

U.S. ARMY CHEMICAL MATERIALS AGENCY
PROJECT MANAGER FOR NON-STOCKPILE CHEMICAL MATERIEL
EDGEWOOD AREA, ABERDEEN PROVING GROUND, MD

EXPLOSIVE DESTRUCTION SYSTEM
PHASE 2 SERIES

Sandia National Laboratory
Livermore, California

FRAG SUPPRESSION SYSTEM
4.2 MORTAR 6-PACK BOTTOM FRAME ASSEMBLY

CONTRACT NO	
DRAWN BY	SCHWINGHAMMER 09/20/2005
CHECKED BY	J DOLAKE 09/21/2005
APPROVED BY	D COLE 09/21/2005
SIZE	E
CAGE CODE	14214
PROJECT	
DRAWING NO.	A74333
REV	B
SCALE	NONE
FILE NAME	A74333.IDW
SHEET	1 OF 1

A74332 | P2 SERIES
NEXT ASSY | USED ON
APPLICATION

ALABAMA LICENSED 22140-E PROFESSIONAL ENGINEER JERRY L. BLEVINS 10/23/14

FILE NAME: A74333	
SOFTWARE: –	VERSION: –
–	–
–	–
NEXT ASSY	USED ON

REV STATUS OF SHEETS	REV																	
	SH																	

CONTRACT NUMBER W911SR-12-D-0006	TASK NUMBER D-0019	leidos National Security Sector
UNLESS OTHERWISE SPECIFIED– DIMENSIONS ARE IN INCHES ASME Y14.100M APPLIES	DRAWN 08/26/2014 T. Thompson	CHK 08/26/2014 J. Blevins
TOLERANCES: .XX ±.02 .XXX ±.005 ±1° 125	TM APVD 08/26/2014 J. Blevins	08/26/2014 J. Blevins
MATERIAL –	APVD –	TITLE FRAG SUPPRESSION SYSTEM 4.2 MORTAR 6-PACK BOTTOM FRAME ASSEMBLY
FINISH –	APVD –	SIZE D / CAGE CODE OWR61 / DWG. NO. A74333 / REV B
		SCALE NTS / SHEET 1 of 1

D A74333 REV B

REVISIONS				
REV	DESCRIPTION	DATE	APPROVED	

NOTES:

1. DIMENSIONING AND TOLERANCING PER ASME Y14.5-1994.
2. MATERIAL: 1018 OR COMPARABLE MILD STEEL SHEET.
3. UNLESS OTHERWISE SPECIFIED: MAXIMUM SURFACE FINISH 63√
4. REMOVE ALL SHARP CORNERS AND BURRS .010 - .030.
5. STAMP PART WITH DRAWING NUMBER APPROX. WHERE SHOWN.
6. WELD FOLLOWING STANDARD PRACTICES OUTLINED IN ANSI/AWS 10.4.

REVISIONS						
ISSUED BY	LTR	DESCRIPTION	DATE	CAD	CHKR	APPV'D
TVA	-	INITIAL RELEASE PER NOR 2E1-0017-001	05/04/06	DPB	RSH	RWK
TVA	A	REVISED PER NOR 2E1-0019-001	10/25/06	ADM	SLC	RWK

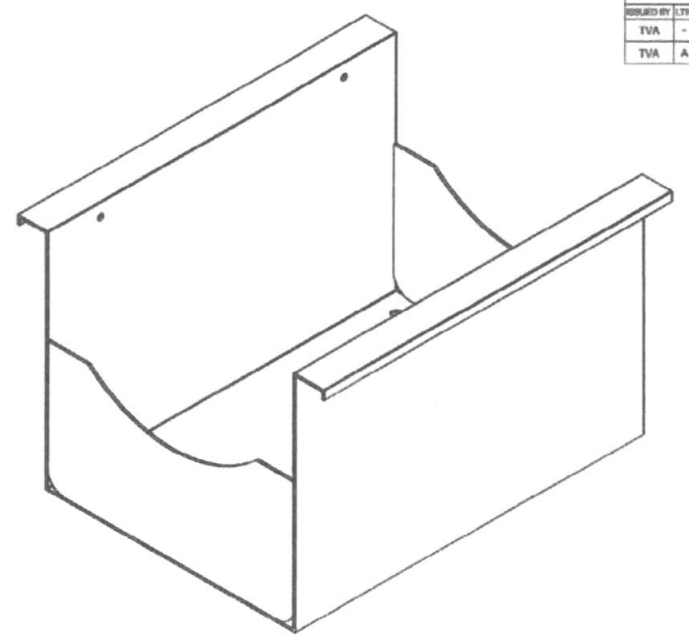

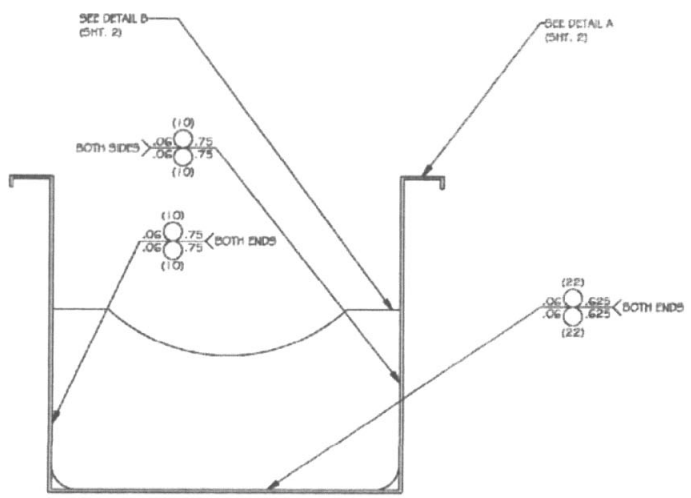

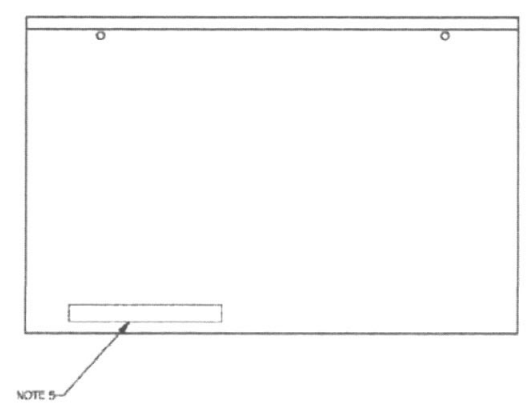

SUBSYSTEM: 505

U.S. ARMY CHEMICAL MATERIALS AGENCY
PROJECT MANAGER FOR NON-STOCKPILE CHEMICAL MATERIEL
EDGEWOOD AREA, ABERDEEN PROVING GROUND, MD

EXPLOSIVE DESTRUCTION SYSTEM
PHASE 2 SERIES

A74333	P2 SERIES	CONTRACT NO.		Sandia National Laboratory, Livermore, California			
NEXT ASSY	USED ON	DRAWN BY: SCHWINGHAMMER	DATE 06/07/2005	FRAG SUPPRESSION SYSTEM 4.2 MORTAR 6-PACK HOLDER BASE WELDMENT			
APPLICATION		CHECKED BY: J DIDLAKE	DATE 06/07/2005				
		APPROVED BY: D COLE	DATE 06/08/2005	SIZE E	CAGE CODE 14214	PROJECT	DRAWING NO. A74338	REV. A
				SCALE 1/2	FILE NAME A74338.IDW	SHEET 1 OF 2	

REV STATUS OF SHEETS	REV																			
	SH																			

CONTRACT NUMBER W911SR-12-D-0006	TASK NUMBER D-0019	leidos National Security Sector
UNLESS OTHERWISE SPECIFIED- DIMENSIONS ARE IN INCHES ASME Y14.100M APPLIES	DRAWN 08/26/2014 T. Thompson / CHK 08/26/2014 J. Blevins	TITLE FRAG SUPPRESSION SYSTEM 4.2 MORTAR 6-PACK HOLDER BASE WELDMENT
TOLERANCES: .XX ±.02 .XXX ±.005 ∠ ±1° 125√	TM APVD 08/26/2014 J. Blevins / 08/26/2014 J. Blevins	
MATERIAL —	APVD —	SIZE D / CAGE CODE 0WR61 / DWG. NO. A74338 / REV A
FINISH —	APVD —	SCALE NTS / SHEET 1 of 2

FILE NAME: A74338-sh1
SOFTWARE: — VERSION: —

—	—
—	—
NEXT ASSY	USED ON

ALABAMA LICENSED PROFESSIONAL ENGINEER JERRY L. BLEVINS

REVISIONS						
ISSUED BY	LTR	DESCRIPTION	DATE	CAD	CHKR	APPV'D
TVA	A	SEE SHEET 1	10/29/08	DPB	RSH	RWK

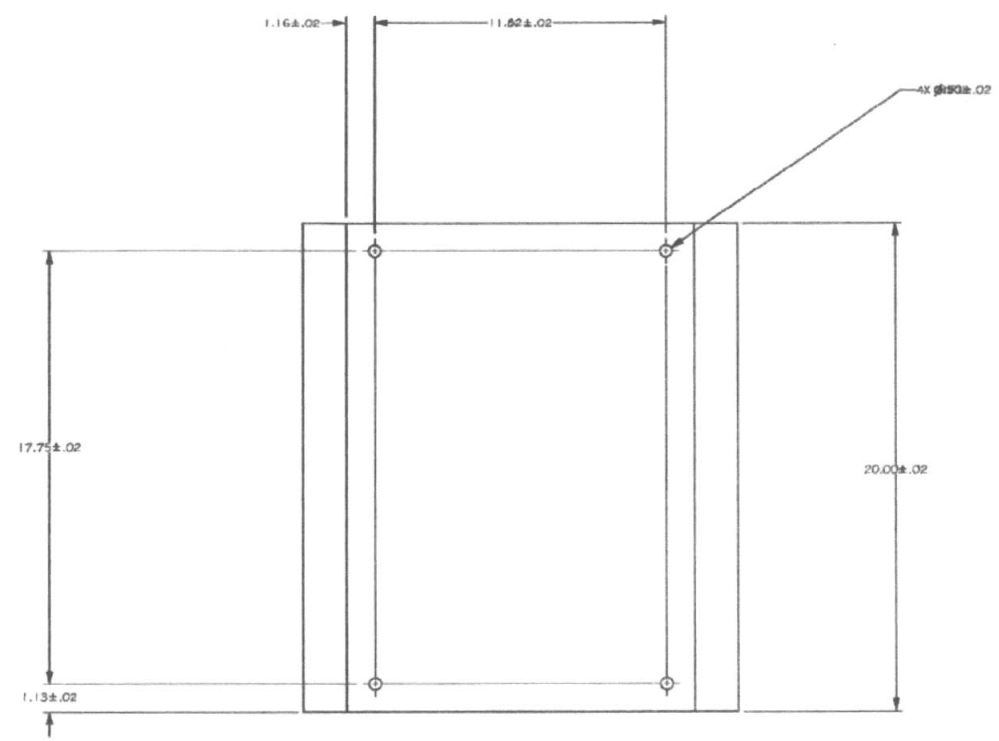

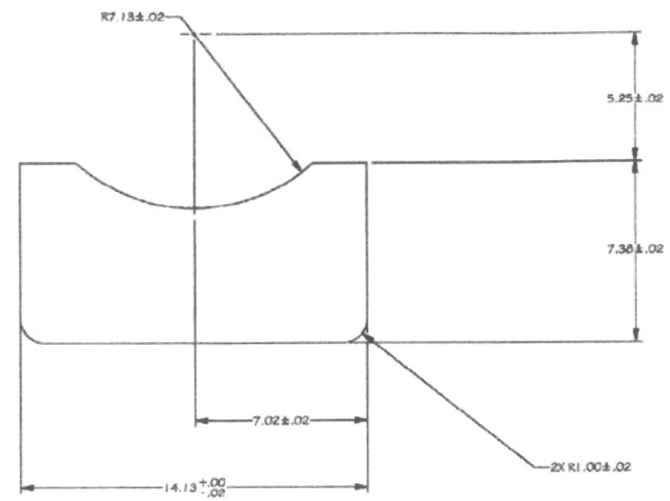

DETAIL B
(SHT. 1)

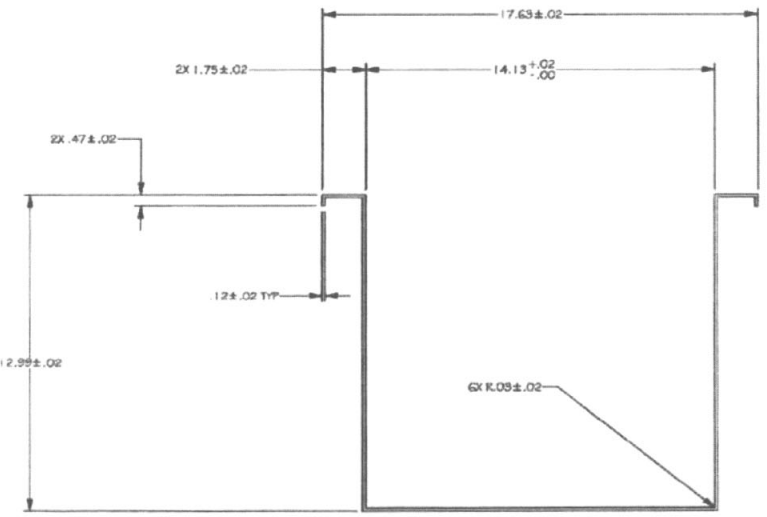

DETAIL A
(SHT. 1)

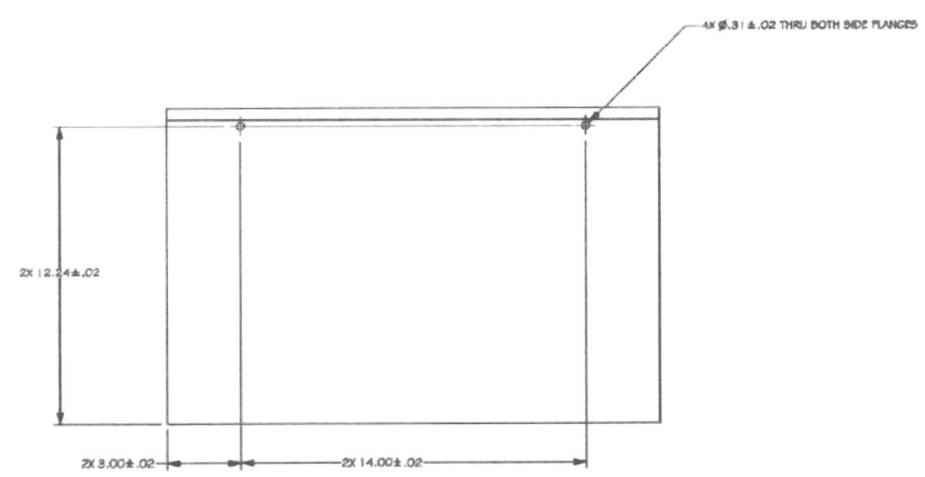

REVISIONS		
REV	DESCRIPTION	DATE	APPROVED

ALABAMA LICENSED PROFESSIONAL ENGINEER JERRY L. BLEVINS NO. 32143-E
10/09/14

A74338 SH 1	P2 SERIES	SIZE E	CAGE CODE 14214	PROJECT	DRAWING NO. A74338	REV A
NEXT ASSY	USED ON				
APPLICATION		SCALE 1/2	FILE NAME A74338.IDW	SHEET 2 OF 2	

SUBSYSTEM: 505

FILE NAME: A74338-sh2
SOFTWARE: — VERSION: —

—	—
—	—
NEXT ASSY	USED ON

REV STATUS OF SHEETS	REV	SH

CONTRACT NUMBER W911SR-12-D-0006

TASK NUMBER D-0019

leidos National Security Sector

UNLESS OTHERWISE SPECIFIED- DIMENSIONS ARE IN INCHES ASME Y14.100M APPLIES.
TOLERANCES: .XX ±.02 .XXX ±.005 ∠ ±1° 125

DRAWN 08/26/2014 T. Thompson
CHK 08/26/2014 J. Blevins
TM APV'D 08/26/2014 J. Blevins
APV'D 08/26/2014 J. Blevins

MATERIAL —
APV'D —
FINISH —
APV'D —

TITLE
FRAG SUPPRESSION SYSTEM
4.2 MORTAR 6-PACK HOLDER
BASE WELDMENT

SIZE	CAGE CODE	DWG. NO.	REV
D	0WR61	A74338	A
SCALE NTS		SHEET 2 of 2	

FOLD LINE

REV A

D A74338

REVISIONS			
REV	DESCRIPTION	DATE	APPROVED

NOTES:

1. DIMENSIONING AND TOLERANCING PER ASME Y14.5-1994.
2. MATERIAL: MILD STEEL SHEET, TYPE 1018 OR COMPARABLES, .12 THK.
3. UNLESS OTHERWISE SPECIFIED: MAXIMUM SURFACE FINISH 63.
4. REMOVE ALL SHARP CORNERS AND BURRS .010 - .030.
5. STAMP PART WITH DRAWING NUMBER APPROX. WHERE SHOWN.

REVISIONS						
ISSUED BY	LTR	DESCRIPTION	DATE	CAD	CHKR	APPVD
TVA	-	INITIAL RELEASE PER NOR 2E1-0017-001	05/04/06	DPB	RSH	RWK
TVA	A	REVISED PER NOR 2E1-0019-001	10/20/06	ADM	SLC	RWK
TVA	B	REVISED PER NOR 2E1-0059-013	11/10/11	KJK	SLC	TSM

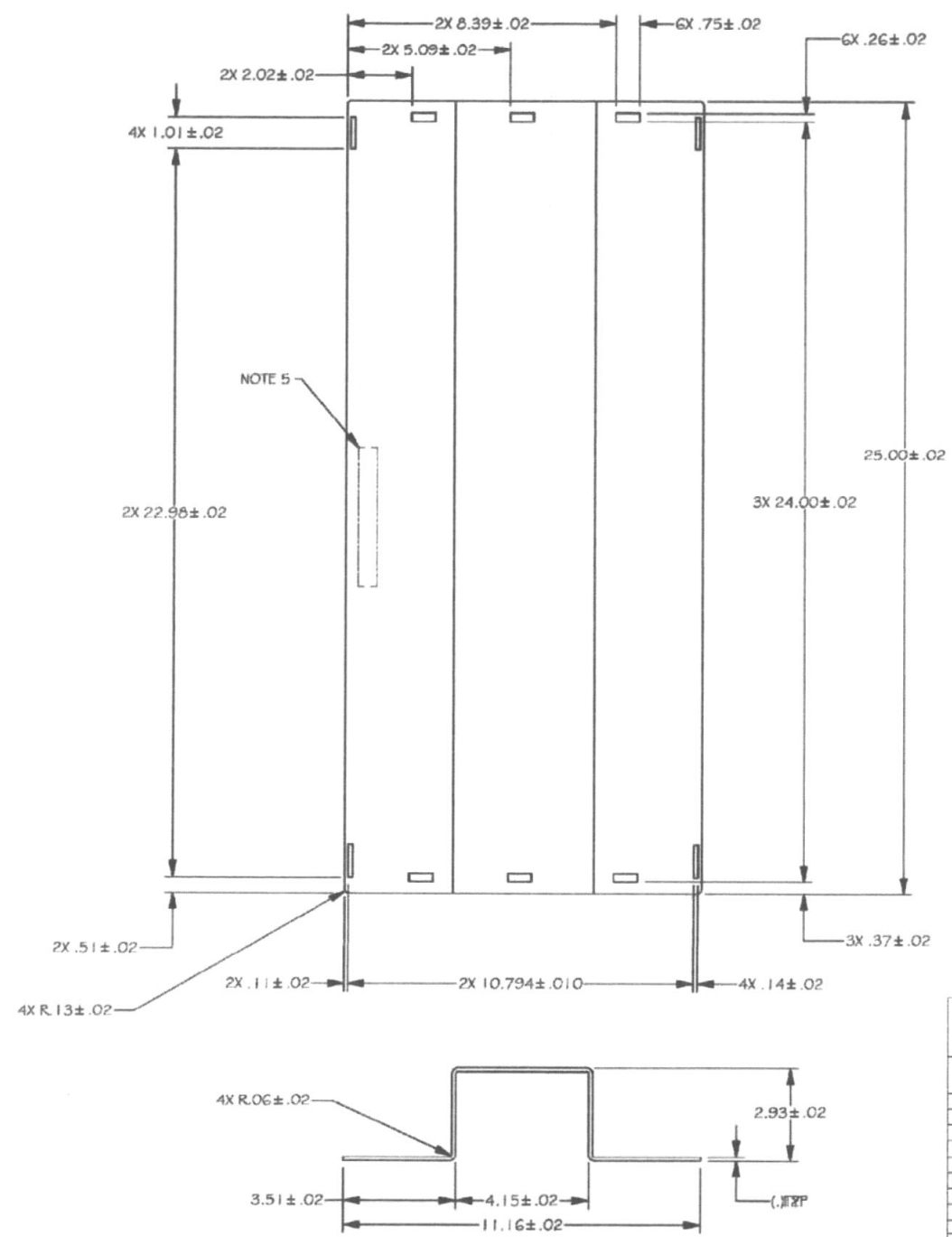

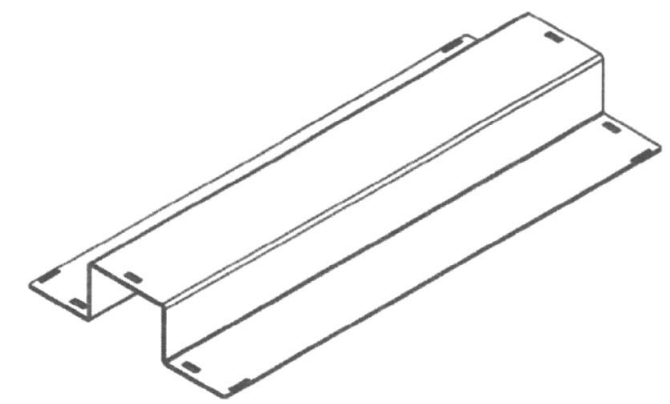

U.S. ARMY CHEMICAL MATERIALS AGENCY
PROJECT MANAGER FOR NON-STOCKPILE CHEMICAL MATERIEL
EDGEWOOD AREA, ABERDEEN PROVING GROUND, MD

EXPLOSIVE DESTRUCTION SYSTEM
PHASE 2 SERIES

Sandia National Laboratory
Livermore, California

FRAG SUPPRESSION SYSTEM

4.2 MORTAR 6-PACK HOLDER TOP

CONTRACT NO.			
DRAWN BY: SCHWINCHAMMER	DATE 06/06/2006		
CHECKED BY: J DIOLAKE	DATE 06/06/2006		
APPROVED BY: D COLE	DATE 06/06/2006		
A78390	P2 SERIES		
NEXT ASSY	USED ON		
APPLICATION			

SIZE	CAGE CODE	DWG NO	REV
D	0WR61	A74339	B
SCALE 1/2	FILE NAME A74339.IDW	SHEET 1 OF 1	

SUBSYSTEM: EOS

ALABAMA LICENSED PROFESSIONAL ENGINEER JERRY L. BLEVINS 12/09/14

REV STATUS OF SHEETS	REV															
	SH															

CONTRACT NUMBER W911SR-12-D-0006	TASK NUMBER D-0019	leidos National Security Sector 2400-A Bee Hill Corporate Center Drive, Abingdon, MD 21009	
UNLESS OTHERWISE SPECIFIED- DIMENSIONS ARE IN INCHES ASME Y14.100M APPLIES TOLERANCES: .XX ±.02 .XXX ±.005 ∠ ±1°	DRAWN 08/26/2014 T. Thompson; CHK 08/26/2014 J. Blevins; TM APVD 08/26/2014 J. Blevins; 08/26/2014 J. Blevins	TITLE FRAG SUPPRESSION SYSTEM 4.2 MORTAR 6-PACK HOLDER TOP	
MATERIAL —	APVD —	SIZE D	CAGE CODE 0WR61 / DWG. NO. A74339 / REV B
FINISH —	APVD —	SCALE NTS	SHEET 1 of 1

FILE NAME: A74339	
SOFTWARE: —	VERSION: —
—	—
—	—
NEXT ASSY	USED ON

FOLD LINE

D A74339 REV B

REVISIONS			
REV	DESCRIPTION	DATE	APPROVED

NOTES:

1. MATERIAL: SEE PARTS LIST.

REVISIONS						
ISSUED BY	LTR	DESCRIPTION	DATE	CAD	CHKR	APPVD
TVA	-	INITIAL RELEASE PER NOR 2E1-0017-001	05/04/06	DPB	RSH	RWK
TVA	A	REVISED PER NOR 2E1-0018-001	10/25/06	ADM	SLC	RWK
TVA	B	REVISED PER NOR 2E1-0068-018	11/10/11	KJM/EDF	SLC	TSM
TVA	C	REVISED PER NOR 2E1-0067-038	11/10/11	KJM/EDF	SLC	TSM

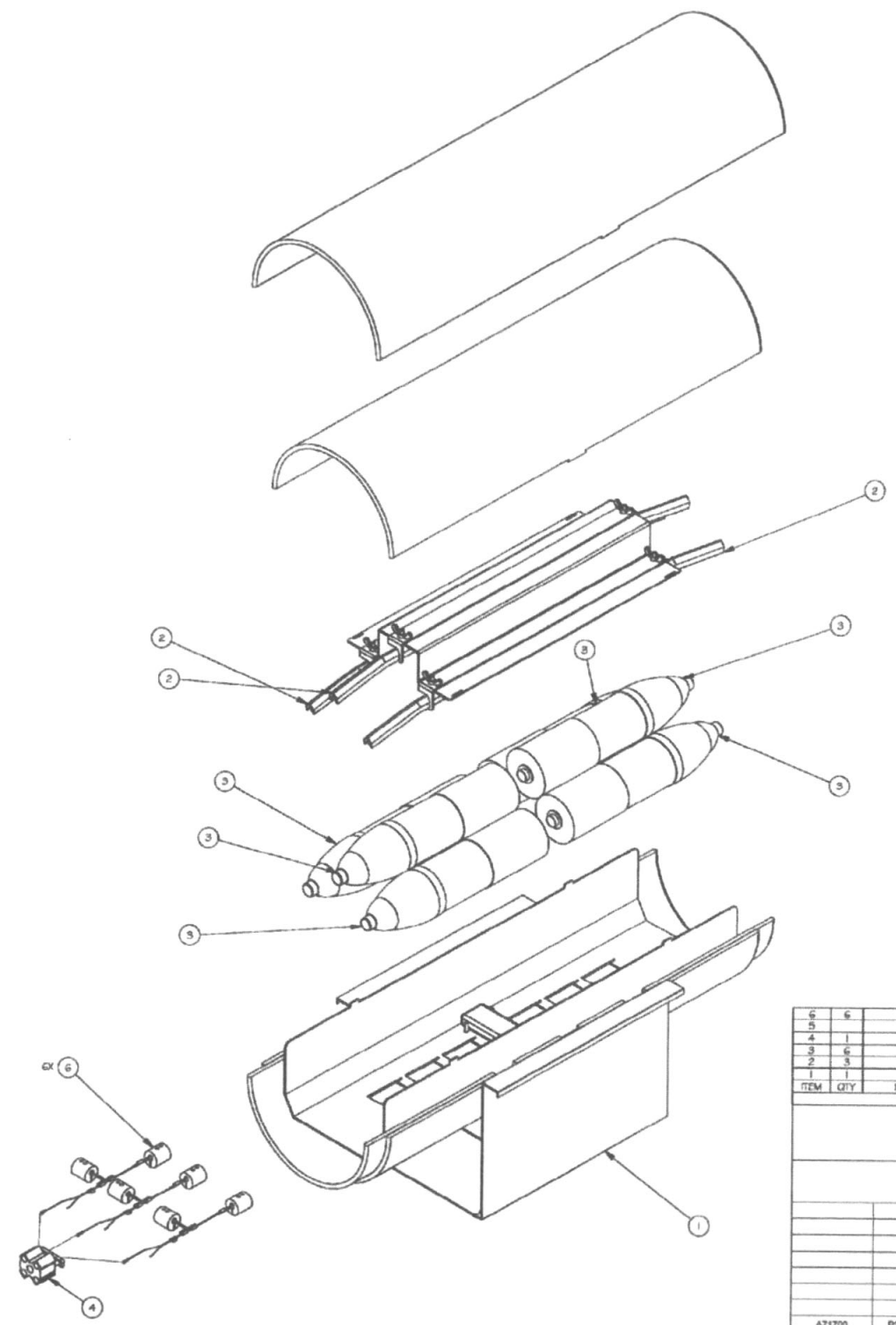

ITEM	QTY	PART NUMBER	DESCRIPTION	VENDOR
6	6	A74433	4.2 MORTAR 6-PACK KIT, 12006 DET ADAPTER ASSEMBLY	
5			NOT USED	
4	1	A73755	6-PACK, MULTIPLE INTERIOR, DETONATOR JACK ASSEMBLY	
3	6	A65044-P2	4.2 MORTAR 3D MODEL	
2	3	A74340	4.2 MORTAR 6-PACK LSC	
1	1	A74332	4.2 MORTAR 6-PACK ASSEMBLY	

Parts List

U.S. ARMY CHEMICAL MATERIALS AGENCY
PROJECT MANAGER FOR NON-STOCKPILE CHEMICAL MATERIEL
EDGEWOOD AREA, ABERDEEN PROVING GROUND, MD

EXPLOSIVE DESTRUCTION SYSTEM
PHASE 2 SERIES

A71700	P2 SERIES
NEXT ASSY	USED ON
APPLICATION	

CONTRACT NO.

DRAWN BY: Schwinghammer — DATE: 06/22/2005

CHECKED BY: D COLE — DATE: 06/22/2005

APPROVED BY: J DIDLAKE — DATE: 06/22/2005

Sandia National Laboratory
Livermore, California

FRAG SUPPRESSION SYSTEM

4.2 MORTAR 6-PACK KIT

SIZE	CAGE CODE	PROJECT	DRAWING NO.	REV
E	14214		A74350	C

SCALE: NONE — FILE NAME: A74350.IDW — SHEET 1 OF 1

SUBSYSTEM: 205

ALABAMA LICENSED No. 31145-E PROFESSIONAL ENGINEER JERRY L. BLEVINS 10/29/14

REV STATUS OF SHEETS	REV																			
	SH																			

CONTRACT NUMBER: W911SR-12-D-0006

TASK NUMBER: D-0019

leidos National Security Sector

UNLESS OTHERWISE SPECIFIED– DIMENSIONS ARE IN INCHES ASME Y14.100M APPLIES

TOLERANCES: .XX ±.02 .XXX ±.005 ∠ ±1° 125

DRAWN 08/26/2014 T. Thompson — CHK 08/26/2014 J. Blevins — TM 08/26/2014 J. Blevins — APVD 08/26/2014 J. Blevins

MATERIAL — — APVD —

FINISH — — APVD —

TITLE: FRAG SUPPRESSION SYSTEM 4.2 MORTAR 6-PACK KIT

SIZE	CAGE CODE	DWG. NO.	REV
D	0WR61	A74350	C

SCALE NTS — SHEET 1 of 1

FILE NAME: A74350
SOFTWARE: — VERSION: —

NEXT ASSY	USED ON
—	—
—	—

FOLD LINE

REV C — D A74350

REVISIONS						
REV	DESCRIPTION	DATE	APPROVED	

NOTES:

1. MATERIAL: SEE PARTS LIST.

REVISIONS						
REQUIRED BY	LTR	DESCRIPTION	DATE	CAD	CHKR.	APPVD
TVA	C	REVISED PER NOR 2E1-0041-005	10/18/07	BDM	SLC	RWK
TVA	D	REVISED PER NOR 2E1-0043-001	02/14/08	EDF	SLC	TSM
TVA	E	REVISED PER NOR 2E1-0087-031	11/10/11	EDF	SLC	TSM

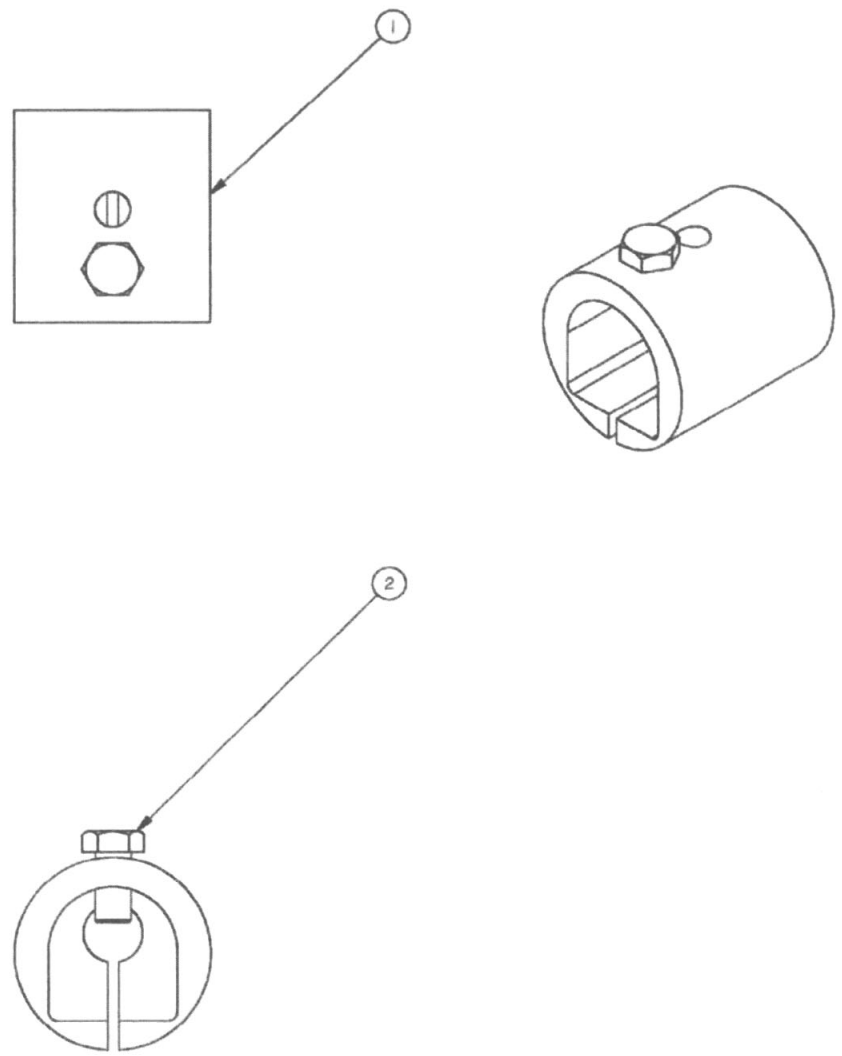

ITEM	QTY	PART NUMBER	DESCRIPTION	VENDOR
2	1	76101	NYLON HEX HD MACHINE SCREW, 1/4-20 UNC X 1/2 LG	FASTENAL
1	1	A74434	1200G DETONATOR ADAPTER ASSEMBLY 1200G DET ADAPTOR	

Parts List

U.S. ARMY CHEMICAL MATERIALS AGENCY
PROJECT MANAGER FOR NON-STOCKPILE CHEMICAL MATERIEL
EDGEWOOD AREA, ABERDEEN PROVING GROUND, MD

EXPLOSIVE DESTRUCTION SYSTEM
PHASE 2 SERIES

APPLICATION	NEXT ASSY	USED ON
A76134	P2 SERIES	
A76126	P2 SERIES	
A73819	P2 SERIES	
A74466	P2 SERIES	
A74360	P2 SERIES	

CONTRACT NO.
DRAWN BY: SCHWINGHAMMER DATE 05/01/2006
CHECKED BY: SCHWINGHAMMER DATE 05/01/2006
APPROVED BY: D. COLE DATE 05/01/2006

Sandia National Laboratory
Livermore, California

4.2 MORTAR 6-PACK KIT

1200G DETONATOR ADAPTER ASSEMBLY

SIZE D | CAGE CODE 14214 | PROJECT | DRAWING NO. A74433 | REV E
SCALE 2/1 | FILE NAME A74433.IDW | SHEET 1 OF 1

SUBSYSTEM: EOS

ALABAMA LICENSED 32765-E PROFESSIONAL ENGINEER JERRY L. BLEVINS

REV STATUS OF SHEETS	REV																	
	SH																	

CONTRACT NUMBER W911SR-12-D-0006

TASK NUMBER D-0019

leidos National Security Sector

UNLESS OTHERWISE SPECIFIED– DIMENSIONS ARE IN INCHES ASME Y14.100M APPLIES

TOLERANCES: .XX ±.02 .XXX ±.005 ∠ ±1° 125

DRAWN 08/26/2014 T. Thompson | CHK 08/26/2014 J. Blevins | TM APVD 08/26/2014 J. Blevins | APVD 08/26/2014 J. Blevins

MATERIAL –

FINISH –

APVD –

APVD –

TITLE 4.2 MORTAR 6-PACK KIT 1200G DETONATOR ADAPTER ASSEMBLY

SIZE D | CAGE CODE OWR61 | DWG. NO. A74433 | REV E

SCALE NTS | SHEET 1 of 1

FILE NAME: A74433
SOFTWARE: – VERSION: –

NEXT ASSY	USED ON
–	–
–	–

FOLD LINE

D A74433 REV E

REVISIONS			
REV	DESCRIPTION	DATE	APPROVED

REVISIONS						
REVISED BY	LTR	DESCRIPTION	DATE	CAD	CHKR	APPVD
TVA	A	REVISED PER NOR 2E1-0019-001	10/20/08	ADM	SLC	RWK
TVA	B	REVISED PER NOR 2E1-0043-007	03/14/08	EDF	SLC	TBM
TVA	C	REVISED PER NOR 2E1-0087-030	11/10/11	EDF	SLC	TBM

NOTES:

1. DIMENSIONING AND TOLERANCING PER ASME Y14.5-1994.
2. MATERIAL: DELRIN BAR STOCK Ø1.375.
3. UNLESS OTHERWISE SPECIFIED: MAXIMUM SURFACE FINISH 63.
4. REMOVE ALL SHARP CORNERS AND BURRS .010 - .030.
5. BAG AND TAG PART WITH DRAWING NUMBER.

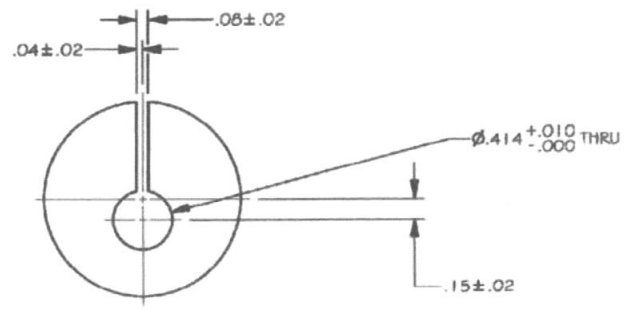

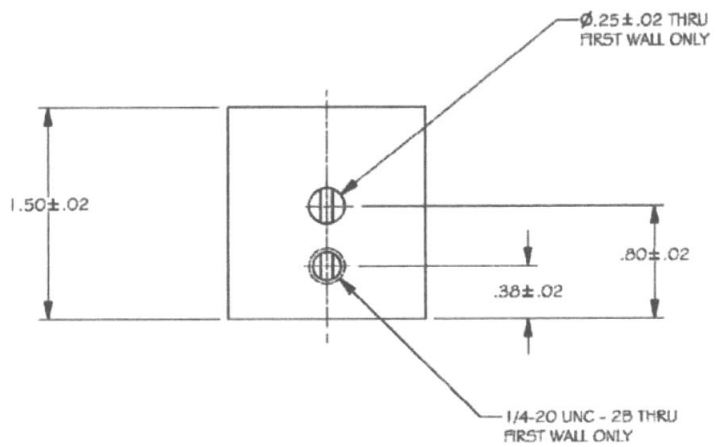

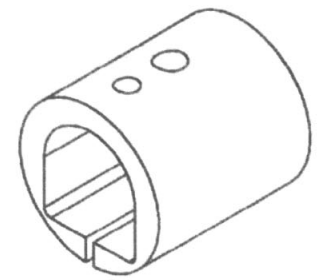

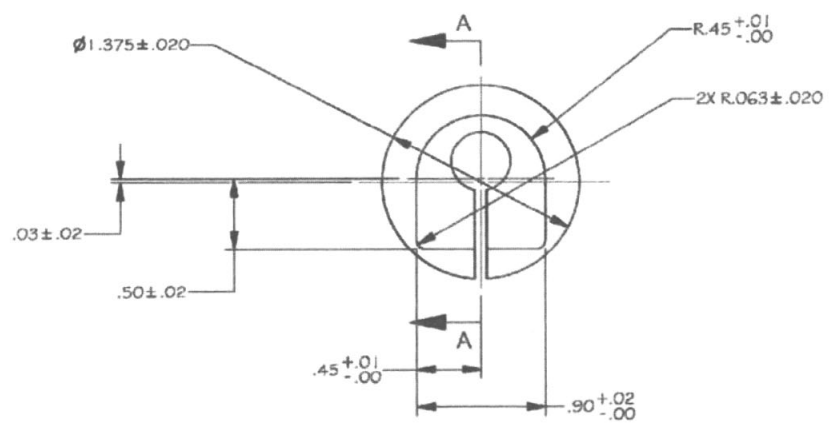

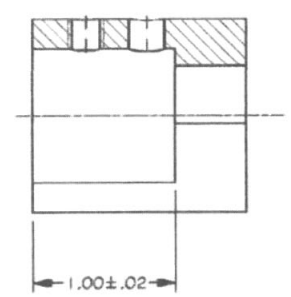

SECTION A-A

SUBSYSTEM: EOS

U.S. ARMY CHEMICAL MATERIALS AGENCY
PROJECT MANAGER FOR NON-STOCKPILE CHEMICAL MATERIEL
EDGEWOOD AREA, ABERDEEN PROVING GROUND, MD

EXPLOSIVE DESTRUCTION SYSTEM
PHASE 2 SERIES

Sandia National Laboratory
Livermore, California

1200G DETONATOR ADAPTER ASSEMBLY

1200G DETONATOR ADAPTER

CONTRACT NO.			
DRAWN BY: SCHWINGHAMMER	DATE 05/01/2008		
CHECKED BY: SCHWINGHAMMER	DATE 05/01/2008		
APPROVED BY: D. COLE	DATE 05/01/2008		
A74433	P2 SERIES		
NEXT ASSY	USED ON		
APPLICATION			

SIZE	CAGE CODE	PROJECT	DRAWING NO.	REV.
D	14214		A74434	C
SCALE 2/1	FILE NAME A74434.IDW		SHEET 1 OF 1	

ALABAMA LICENSED PROFESSIONAL ENGINEER JERRY L. BLEVINS

REV STATUS OF SHEETS	REV																			
	SH																			

CONTRACT NUMBER W911SR-12-D-0006	TASK NUMBER D-0019	leidos National Security Sector	
UNLESS OTHERWISE SPECIFIED– DIMENSIONS ARE IN INCHES ASME Y14.100M APPLIES	DRAWN 08/26/2014 T. Thompson	CHK 08/26/2014 J. Blevins	TITLE 1200G DETONATOR ADAPTER ASSEMBLY 1200G DETONATOR ADAPTER
TOLERANCES: .XX ±.02 .XXX ±.005 ∠ ±1° 125	TM APVD 08/26/2014 J. Blevins	08/26/2014 J. Blevins	
MATERIAL –	APVD –		SIZE D / CAGE CODE OWR61 / DWG. NO. A74434 / REV C
FINISH –	APVD –		SCALE NTS / SHEET 1 of 1

FILE NAME: A74434	
SOFTWARE: – VERSION: –	
–	–
–	–
NEXT ASSY	USED ON

FOLD LINE

REV C

D A74434

REVISIONS						
REV	DESCRIPTION	DATE	APPROVED	

REVISIONS						
ISSUED BY	LTR	DESCRIPTION	DATE	CAD	CHKR	APPVD
TVA	-	INITIAL RELEASE PER NOR 2E1-0040-001	09/22/08	ADM	SLC	TSM

NOTES:

1. MATERIAL: SEE PARTS LIST.
2. CONTAINMENT VESSEL ASSEMBLY REMOVED FOR CLARITY.
3. RAILS REMOVED FOR CLARITY.
4. LOADING TABLES ARE SHOWN WHERE THE CRANE WILL PLACE THE LOAD.

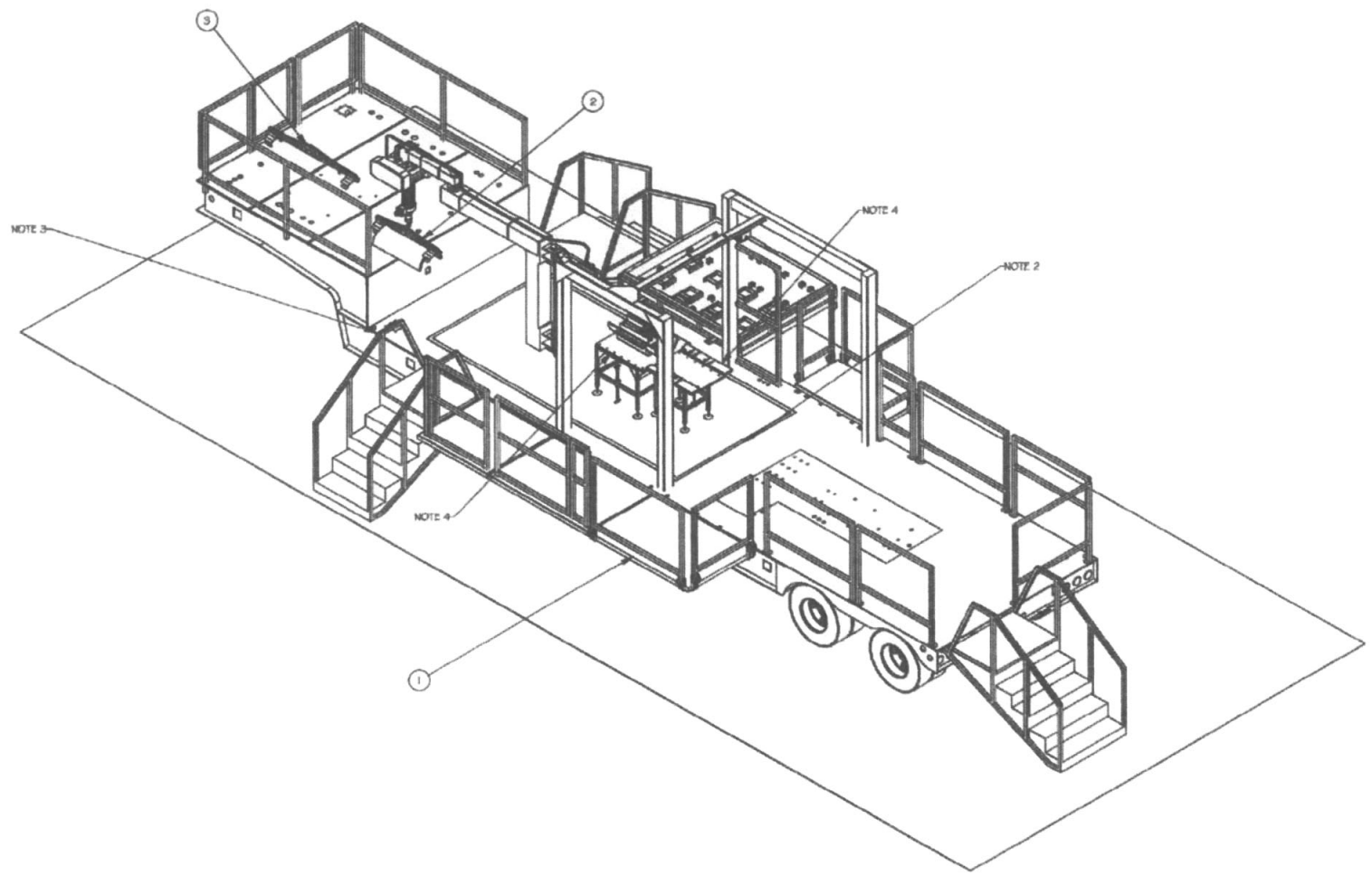

ITEM	QTY	PART NUMBER	DESCRIPTION	VENDOR
5	1	A76132	JIB-CRANE SHIPPING & STORAGE CONFIGURATION (NOT SHOWN)	
4	1	A76133	SHIPPING CONFIGURATION (NOT SHOWN)	
3	1	A76111	7555 32"-46" LIFTING TOOL ASSEMBLY	
2	1	A74471	7558 24"-32" LIFTING TOOL ASSEMBLY	
1	1	A74463	INSTALLATION & MOUNTING ASSEMBLY	

Parts List

U.S. ARMY CHEMICAL MATERIALS AGENCY
PROJECT MANAGER FOR NON-STOCKPILE CHEMICAL MATERIEL
EDGEWOOD AREA, ABERDEEN PROVING GROUND, MD

EXPLOSIVE DESTRUCTION SYSTEM
PHASE 2 SERIES

Sandia National Laboratory
Livermore, California

P2 EDS JIB-CRANE

LIFT ASSIST ASSEMBLY

A70046	P2 SERIES
NEXT ASSY	USED ON
APPLICATION	

CONTRACT NO.		
DRAWN BY: SCHWINGHAMMER	DATE 03/20/2007	
CHECKED BY: MSS	DATE 07/03/2007	
APPROVED BY: P LARI	DATE 07/03/2007	

SIZE	CAGE CODE	PROJECT	DRAWING NO.	REV.
E	14214		A74464	-
SCALE NONE	FILE NAME A74464.IDW	SHEET 1 OF 2		

QUEDYSTEM: LA

REV STATUS OF SHEETS	REV																			
	SH																			

CONTRACT NUMBER W911SR-12-D-0006

TASK NUMBER D-0019

leidos National Security Sector

UNLESS OTHERWISE SPECIFIED– DIMENSIONS ARE IN INCHES ASME Y14.100M APPLIES

TOLERANCES: .XX ±.02 .XXX ±.005 ∠ ±1° 125

DRAWN 06/26/2014 T. Thompson

CHK 06/26/2014 J. Blevins

TM APVD 06/26/2014 J. Blevins

APVD 06/26/2014 J. Blevins

MATERIAL —

FINISH —

APVD —

APVD —

TITLE P2 EDS JIB-CRANE LIFT ASSIST ASSEMBLY

SIZE D | CAGE CODE 0WR61 | DWG. NO. A74464 | REV —

SCALE NTS | SHEET 1 of 2

FILE NAME: A74464-sh1	
SOFTWARE: —	VERSION: —
—	—
—	—
NEXT ASSY	USED ON

ALABAMA LICENSED No. 38143-E PROFESSIONAL ENGINEER JERRY L. BLEVINS

D A74464

REVISIONS						
REV	DESCRIPTION	DATE	APPROVED			

REVISIONS						
ISSUED BY	LTR	DESCRIPTION	DATE	CAD	CHKR	APPVD
TVA	-	SEE SHEET 1	08/22/08	ADM	SLC	TBM

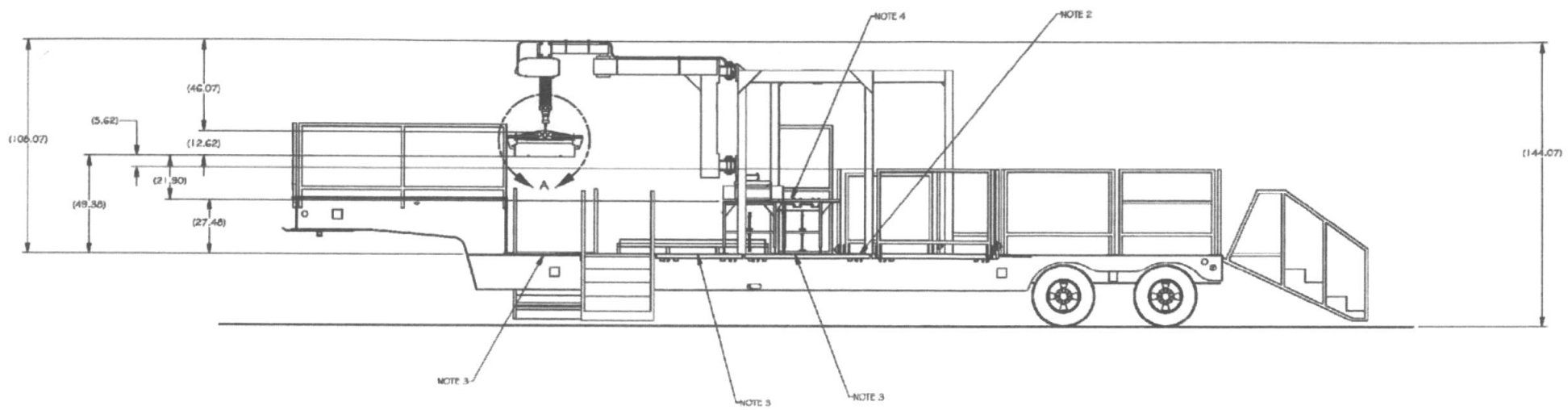

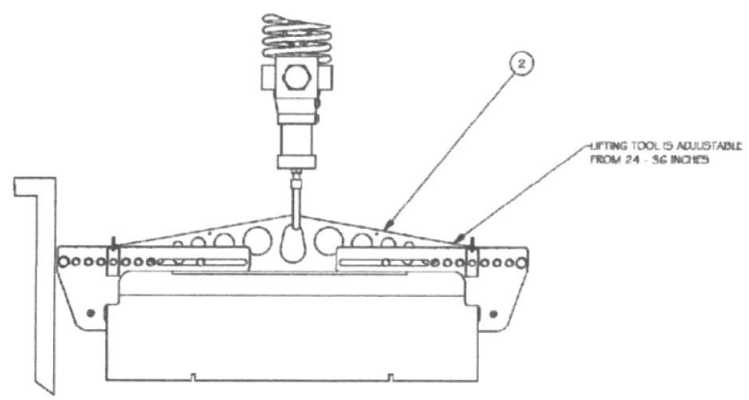

DETAIL A

A74464 SH 1	P2 SERIES	SIZE E	CAGE CODE 14214	PROJECT	DRAWING NO. A74464	REV -
NEXT ASSY	USED ON					
APPLICATION		SCALE NONE	FILE NAME A74464.IDW	SHEET 2 OF 2		

SUBSYSTEM 1A

FILE NAME: A74464-sh2	
SOFTWARE: —	VERSION: —
—	—
—	—
NEXT ASSY	USED ON

REV STATUS OF SHEETS	REV		
	SH		
CONTRACT NUMBER W911SR-12-D-0006	TASK NUMBER D-0019	leidos National Security Sector	
UNLESS OTHERWISE SPECIFIED- DIMENSIONS ARE IN INCHES ASME Y14.100M APPLIES	DRAWN 08/26/2014 T. Thompson	CHK 08/26/2014 J. Blevins	TITLE P2 EDS JIB-CRANE LIFT ASSIST ASSEMBLY
TOLERANCES: .XX ±.02 .XXX ±.005 ∠ ±1° 125	TM APVD 08/26/2014 J. Blevins	08/26/2014 J. Blevins	
MATERIAL —	APVD —		SIZE D / CAGE CODE OWR61 / DWG. NO. A74464 / REV —
FINISH —	APVD —		SCALE NTS / SHEET 2 of 2

STATE OF ALABAMA REGISTERED PROFESSIONAL ENGINEER JERRY L. BLEVINS

D A74464

REVISIONS			
REV	DESCRIPTION	DATE	APPROVED

NOTES:

1. DIMENSIONING AND TOLERANCING PER ASME Y14.5-1994
2. MATERIAL: SEE PARTS LIST.
3. MODIFY THE MOTOR POWER CABLE (ITEM 4) TO THE LENGTH SHOWN AND ATTACH THE TWIST-LOC PLUG (ITEM 1) ONTO THE END OF THE CABLE AS SHOWN IN THE WIRING DIAGRAM. THE LINE FILTER BOX AND FESTOON POWER CABLE THAT IS SUPPLIED BY THE MANUFACTURER ARE NOT USED ON THE EXPLOSIVE DESTRUCTION SYSTEM (EDS).

REVISIONS						
REVISED BY	LTR	DESCRIPTION	DATE	CAD	CHKD	APPVD
TVA	-	INITIAL RELEASE PER NOR 2E1-0040-001	08/22/06	ADM	SLC	TSM
TVA	A	REVISED PER NOR 2E1-3062-016	05/27/11	TWA	SLC	TSM

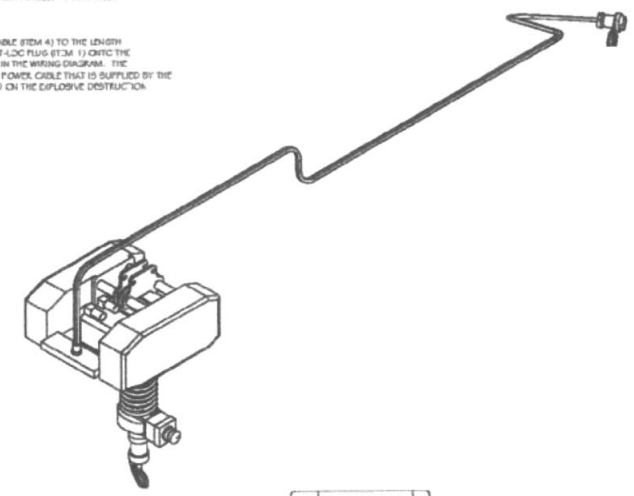

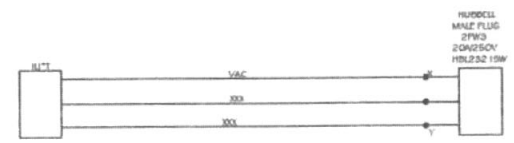

WIRING DIAGRAM

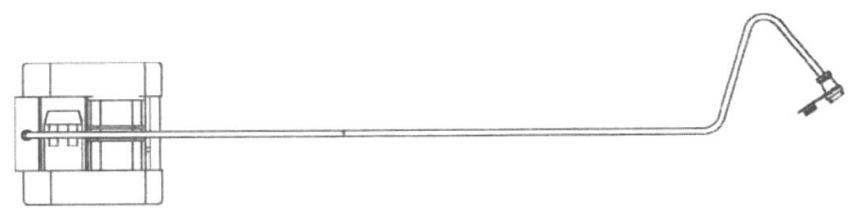

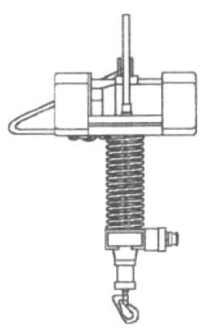

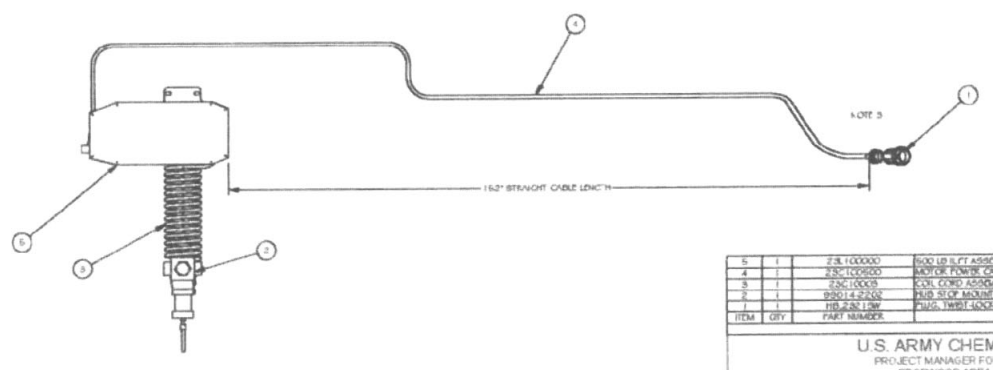

ITEM	QTY	PART NUMBER	DESCRIPTION	VENDOR
5	1	2EJ-100000	500 LB SLIFT ASSEMBLY	STANLEY
4	1	2EC-100000	MOTOR POWER CABLE ASSEMBLY	STANLEY
3	1	2EC-100008	COIL CORD ASSEMBLY, HEAVY DUTY	STANLEY
2	1	9X0114-22C02	HUB STOP MOUNTING BOX ASSEMBLY	STANLEY
1	1	HBL2367 13W	PLUG, TWIST-LOCK WATERTIGHT SAFETY SHROUD	HUBBELL

Parts list

U.S. ARMY CHEMICAL MATERIALS AGENCY
PROJECT MANAGER FOR NON-STOCKPILE CHEMICAL MATERIEL
EDGEWOOD AREA, ABERDEEN PROVING GROUND, MD

EXPLOSIVE DESTRUCTION SYSTEM
PHASE 2 SERIES

A76122	P2 SERIES
A44433	P2 SERIES
NEXT ASSY	USED ON

APPLICATION

CONTRACT NO.
DRAWN BY: SCHWINGHAMMER — DATE: 08/30/2007
CHECKED BY: SCHWINGHAMMER — DATE: 08/05/2007
APPROVED BY: P LARI — DATE: 08/05/2007

Sandia National Laboratory
Livermore, California

P2 EDS JIB-CRANE

ILIFT ASSEMBLY

SIZE	CAGE CODE	PROJECT	DRAWING NO	REV
E	14214		A75115	A

SCALE NONE — FILE NAME A76116 IDW SHEET 1 OF 1

PUBLISHED IN UA

AL ALABAMA LICENSED No. 32143-E PROFESSIONAL ENGINEER JERRY L. BLEVINS

6/20/14

REV STATUS OF SHEETS	REV																			
	SH																			

CONTRACT NUMBER W911SR-12-D-0006	TASK NUMBER D-0019	leidos National Security Sector	
UNLESS OTHERWISE SPECIFIED- DIMENSIONS ARE IN INCHES ASME Y14.100M APPLIES	DRAWN 08/26/2014 T. Thompson	CHK 08/26/2014 J. Blevins	TITLE P2 EDS JIB-CRANE ILIFT ASSEMBLY
TOLERANCES: .XX ±.02 .XXX ±.005 ∠ ±1° 125	TM APVD 08/26/2014 J. Blevins	08/26/2014 J. Blevins	
MATERIAL –	APVD –		SIZE D / CAGE CODE 0WR61 / DWG. NO. A76116 / REV A
FINISH –	APVD –		SCALE NTS / SHEET 1 of 1

FILE NAME: A76116	
SOFTWARE: –	VERSION: –
–	–
–	–
NEXT ASSY	USED ON

FOLD LINE

D A76116 REV A

REVISIONS				
REV	DESCRIPTION	DATE	APPROVED	

NOTES:

1. MATERIAL: SEE PARTS LIST.

REVISIONS						
ISSUED BY	LTR	DESCRIPTION	DATE	CAD	CHKR	APPVD
TVA	-	INITIAL RELEASE PER ECP 2E1-0044-007	04/02/2008	DPB/ADM	SLC	TSM
TVA	A	REVISED PER NOR 2E1-0053-005	08/01/09	KJK	SLC	TSM
TVA	B	REVISED PER NOR 2E1-0086-002	06/01/2011	DPB	SLC	TSM

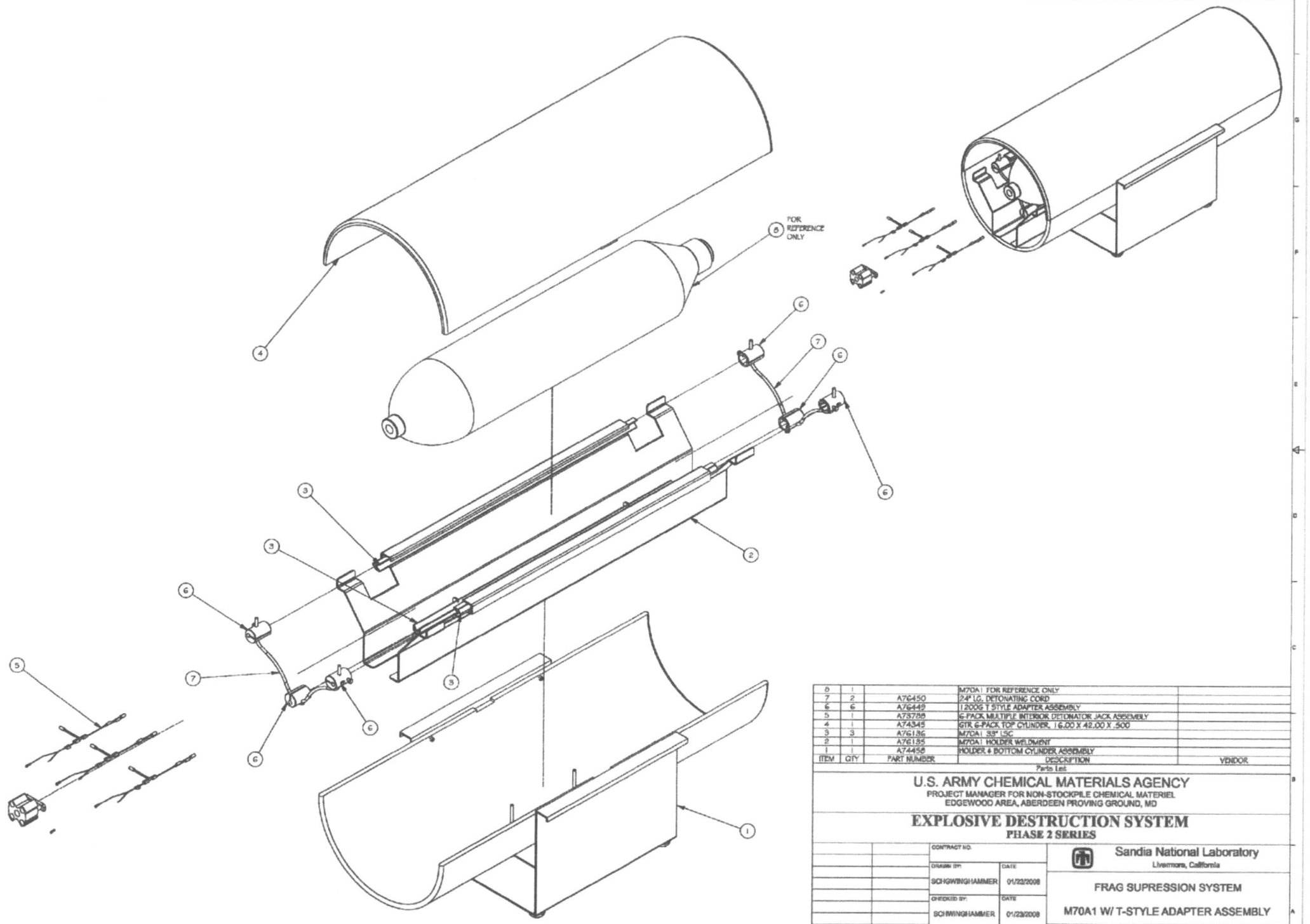

ITEM	QTY	PART NUMBER	DESCRIPTION	VENDOR
8	1		M70A1 FOR REFERENCE ONLY	
7	2	A76450	24" LG. DETONATING CORD	
6	6	A76449	12000 T STYLE ADAPTER ASSEMBLY	
5	1	A73755	6-PACK MULTIPLE INTERBOX DETONATOR JACK ASSEMBLY	
4	1	A74345	GTK 6-PACK TOP CYLINDER, 16.00 X 42.00 X .500	
3	3	A76136	M70A1 3/8" LSC	
2	1	A76135	M70A1 HOLDER WELDMENT	
1	1	A74456	HOLDER & BOTTOM CYLINDER ASSEMBLY	

Parts List

U.S. ARMY CHEMICAL MATERIALS AGENCY
PROJECT MANAGER FOR NON-STOCKPILE CHEMICAL MATERIEL
EDGEWOOD AREA, ABERDEEN PROVING GROUND, MD

EXPLOSIVE DESTRUCTION SYSTEM
PHASE 2 SERIES

A71700	P2 SERIES
NEXT ASSY	USED ON
APPLICATION	

CONTRACT NO.

DRAWN BY: SCHWINGHAMMER	DATE: 01/23/2008
CHECKED BY: SCHWINGHAMMER	DATE: 01/23/2008
APPROVED BY: D COLE	DATE: 01/23/2008

Sandia National Laboratory
Livermore, California

FRAG SUPRESSION SYSTEM

M70A1 W/ T-STYLE ADAPTER ASSEMBLY

SIZE	CAGE CODE	PROJECT	DRAWING NO.	REV.
E	14214		A76448	B

SCALE: NONE FILE NAME: A76448.IDW SHEET 1 OF 1

SUBSYSTEM: 005

REV STATUS OF SHEETS	REV																			
	SH																			

CONTRACT NUMBER: W911SR-12-D-0006

TASK NUMBER: D-0019

UNLESS OTHERWISE SPECIFIED– DIMENSIONS ARE IN INCHES ASME Y14.100M APPLIES

TOLERANCES: .XX ±.02 .XXX ±.005 ∠ ±1° 125

DRAWN 08/26/2014 T. Thompson	CHK 08/26/2014 J. Blevins
TM APVD 08/26/2014 J. Blevins	APVD 08/26/2014 J. Blevins
MATERIAL —	APVD —
FINISH —	APVD —

leidos National Security Sector

TITLE: FRAG SUPRESSION SYSTEM M70A1 W/T-STYLE ADAPTER ASSEMBLY

SIZE	CAGE CODE	DWG. NO.	REV
D	0WR61	A76448	B

SCALE NTS SHEET 1 of 1

FILE NAME: A76448
SOFTWARE: — VERSION: —

—	—
—	—
NEXT ASSY	USED ON

ALABAMA LICENSED 32143-E PROFESSIONAL ENGINEER JERRY L. BLEVINS

D A76448 REV B

REVISIONS			
REV	DESCRIPTION	DATE	APPROVED

NOTES:

1. MATERIAL: SEE PARTS LIST.
2. ALIGN SCRIBE MARK ON ROD (ITEM 5) WITH FRONT PLATE OF WELDMENT (ITEM 1), BY DOING THIS THERE WILL BE EQUAL AMOUNTS STICKING OUT OF FRONT & BACK PLATES.
3. RODS IN CAPTURE PLATE (ITEM 3) NEED TO BE FLUSH WITH SPACER (ITEM 4) TO CLEAR BLAST SHIELD.
4. EXPLODED ASSEMBLY IS ON SHEET2.

REVISIONS						
ISSUED BY	LTR	DESCRIPTION	DATE	CAD	CHKR	APPVD
TVA	-	INITIAL RELEASE PER NOR 2E1-0055-004	11/30/09	TMA	SLC	TMM

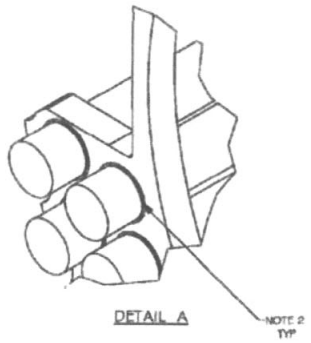

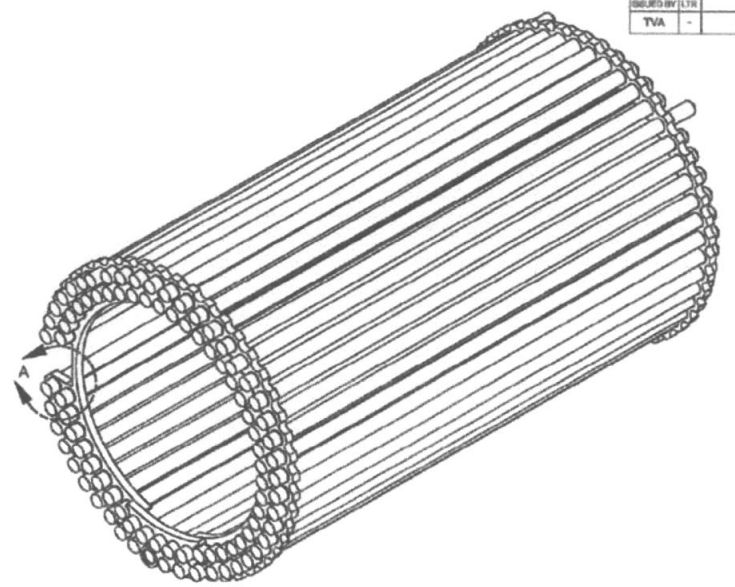

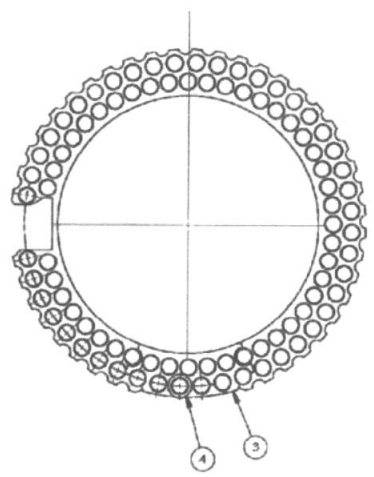

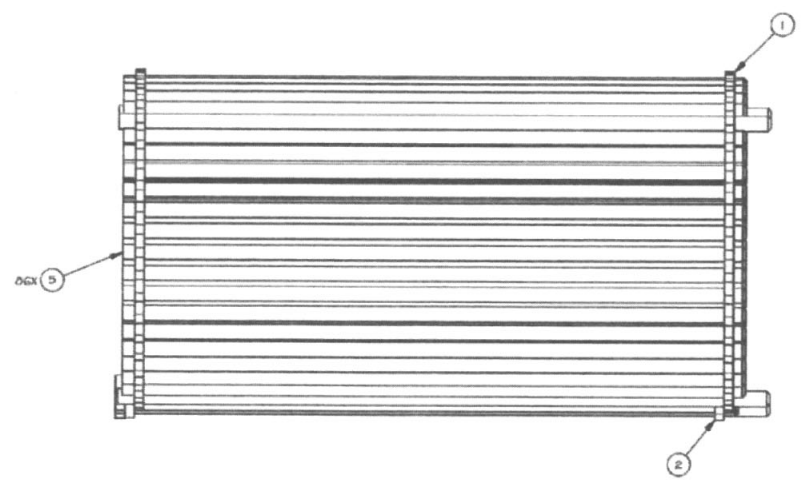

ITEM	QTY	PART NUMBER	DESCRIPTION	VENDOR
5	.06	A77866	AFSS SHORT ROD	
4	1	A77864	AFSS FRONT SPACER	
3	1	A77863	AFSS FRONT CAPTURE PLATE	
2	1	A77862	AFSS INSERT WELDMENT	
1	1	A77286	AFSS MAIN UNIT WELDMENT	

Parts List

U.S. ARMY CHEMICAL MATERIALS AGENCY
PROJECT MANAGER FOR NON-STOCKPILE CHEMICAL MATERIEL
EDGEWOOD AREA, ABERDEEN PROVING GROUND, MD

EXPLOSIVE DESTRUCTION SYSTEM
PHASE 2 SERIES

Sandia National Laboratory
Livermore, California

ADVANCED FRAG SUPPRESSION SYSTEM
UNIVERSAL FRAG SHIELD ASSEMBLY
W/1.25 DIA. RODS

CONTRACT NO.			
DRAWN BY: SCHWINGHAMMER	DATE 06/20/2009		
CHECKED BY: M SCHWINGHAMMER	DATE 06/23/2009		
APPROVED BY: M RISENMAY	DATE 06/20/2009		
SIZE E	CAGE CODE 14214	PROJECT	DRAWING NO. A77285 REV. -
SCALE	FILE NAME A77285.IDW	SHEET 1 OF 2	

A71700	P2 SERIES
NEXT ASSY	USED ON
APPLICATION	

SUBSYSTEM: F05

FILE NAME: A77285-sh1	
SOFTWARE: --	VERSION: --
--	--
--	--
NEXT ASSY	USED ON

REV STATUS OF SHEETS	REV																				
	SH																				

CONTRACT NUMBER	TASK NUMBER
W911SR-12-D-0006	D-0019

UNLESS OTHERWISE SPECIFIED—
DIMENSIONS ARE IN INCHES
ASME Y14.100M APPLIES
TOLERANCES:
.XX ±.02 .XXX ±.005 ∠ ±1° 125

DRAWN	CHK
08/26/2014 T. Thompson	08/26/2014 J. Blevins
TM APVD	
08/26/2014 J. Blevins	08/26/2014 J. Blevins
MATERIAL --	APVD --
FINISH --	APVD --

leidos National Security Sector
2400-A Eisenhower Avenue, Alexandria, VA 22314

TITLE
ASSEMBLY
AFSS W/1.25 DIA RODS

SIZE	CAGE CODE	DWG. NO.	REV
D	OWR61	A77285	—
SCALE NTS		SHEET 1 of 2	

ALABAMA LICENSED PROFESSIONAL ENGINEER TERRY L. BLEVINS

D A77285 REV —

REVISIONS						
ISSUED BY	LTR	DESCRIPTION	DATE	CAD	CHKR	APPVD
TVA	-	SEE SHEET 1	11/30/09	TMA	SLC	TMM

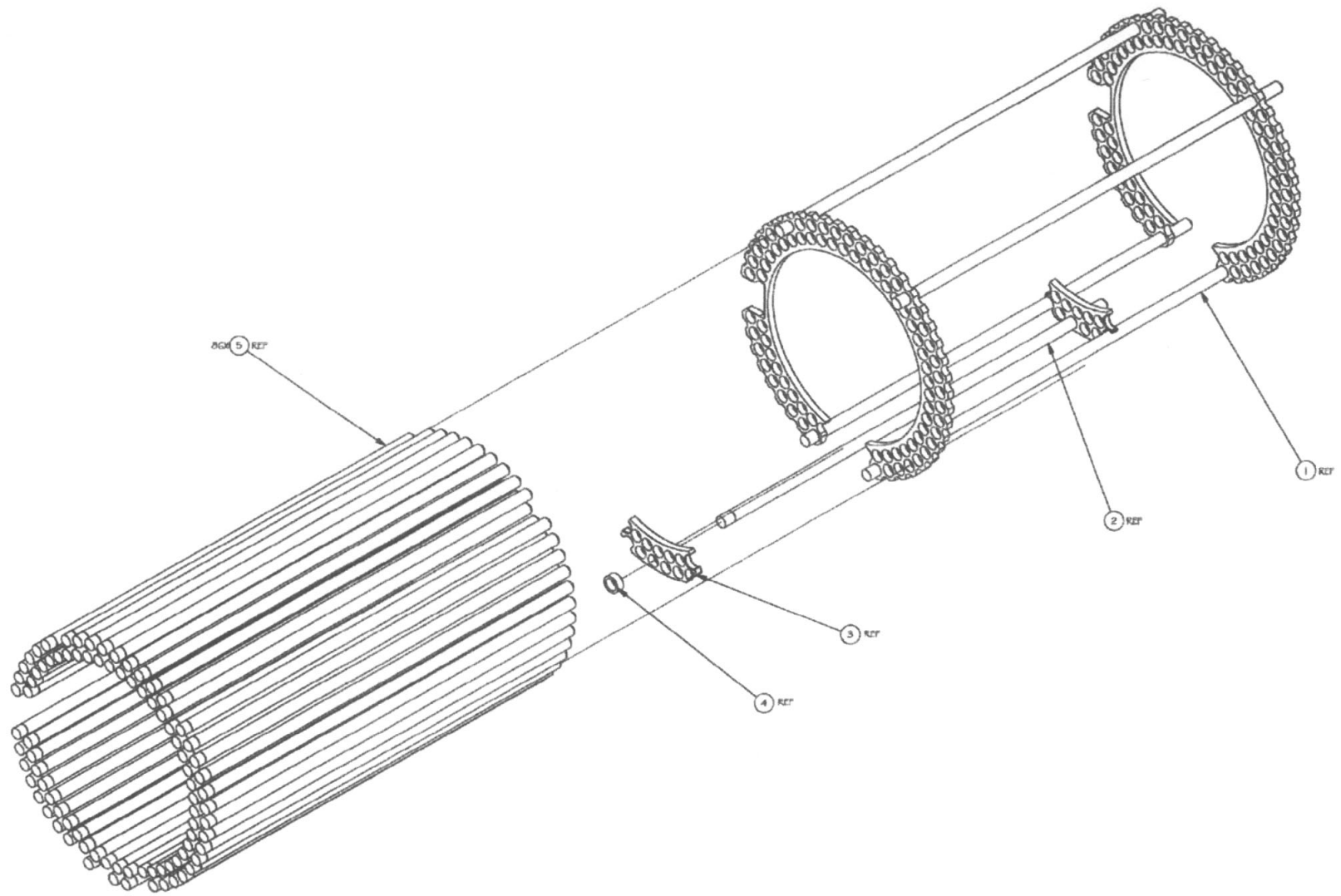

A77285 SH 1	P2 SERIES	SIZE	CAGE CODE	PROJECT	DRAWING NO.	REV
NEXT ASSY	USED ON	E	14214		A77285	-
APPLICATION		SCALE	FILE NAME	A77285.IDW	SHEET 2 OF 2	

SURDYSTEM-EDS

REVISIONS			
REV	DESCRIPTION	DATE	APPROVED

ALABAMA LICENSED PROFESSIONAL ENGINEER JERRY L. BLEVINS

FILE NAME: A77285-sh2			
SOFTWARE: –	VERSION: –		
–	–		
–	–		
NEXT ASSY	USED ON		

REV STATUS OF SHEETS	REV		
	SH		
CONTRACT NUMBER W911SR-12-D-0006	TASK NUMBER D-0019	leidos National Security Sector	
UNLESS OTHERWISE SPECIFIED- DIMENSIONS ARE IN INCHES ASME Y14.100M APPLIES	DRAWN 08/26/2014 T. Thompson	CHK 08/26/2014 J. Blevins	TITLE ASSEMBLY AFSS W/1.25 DIA RODS
TOLERANCES: .XX ±.02 .XXX ±.005 ∠ ±1° 125	TM APVD 08/26/2014 J. Blevins	08/26/2014 J. Blevins	
MATERIAL –	APVD –		SIZE D / CAGE CODE OWR61 / DWG. NO. A77285 / REV –
FINISH –	APVD –		SCALE NTS / SHEET 2 of 2

D A77285

NOTES:
1. THIS DRAWING IS NOT FOR FABRICATION PURPOSES.
IT SIMPLY DEPICTS A 3D MODEL.

REVISIONS						
ISSUED BY	LTR	DESCRIPTION	DATE	CAD	CHKR	APPVD
TVA	-	INITIAL RELEASE PER NOR 2E1-0005-004	11/30/09	DPB	SLC	TMM

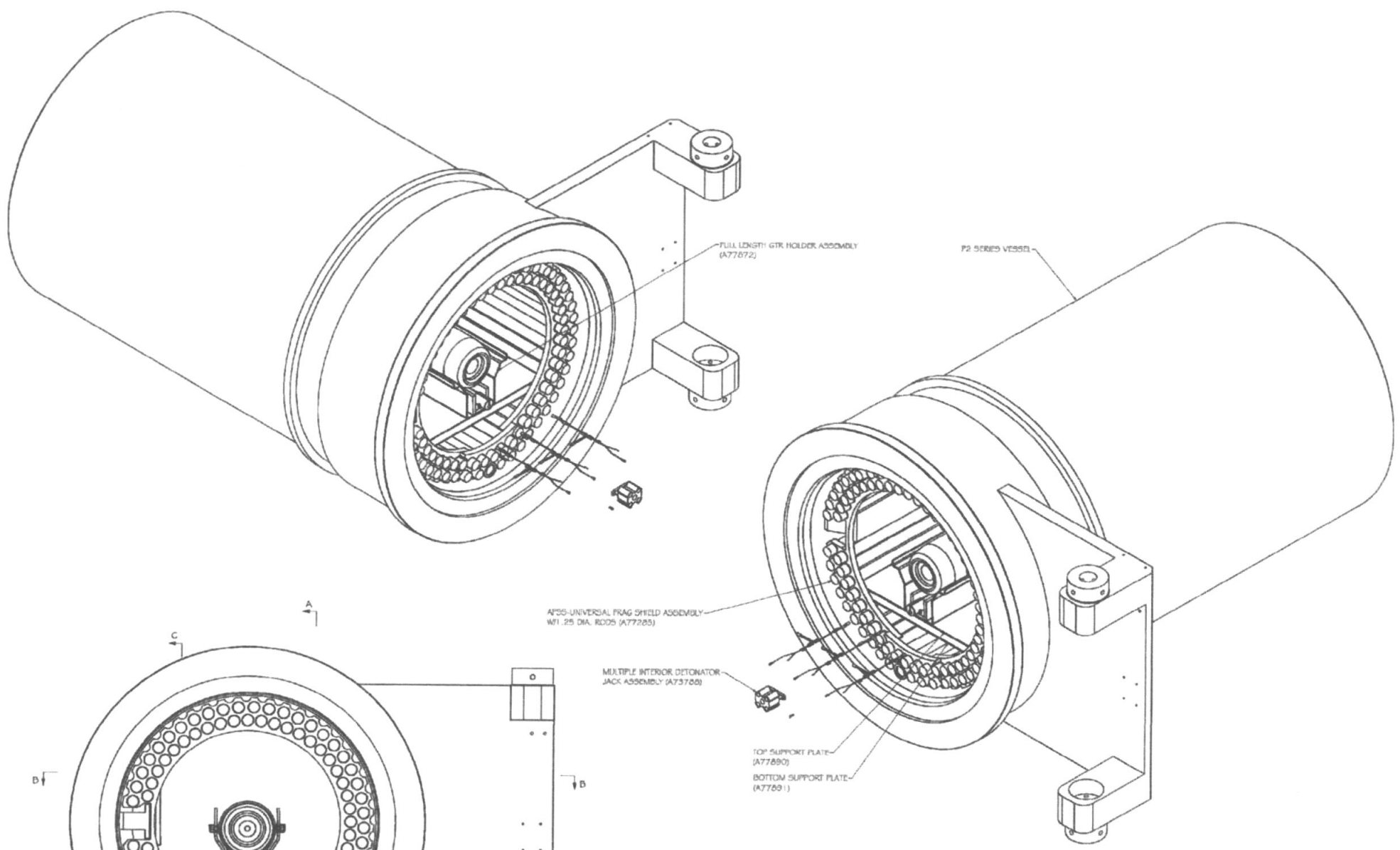

SUBSYSTEM: 805

U.S. ARMY CHEMICAL MATERIALS AGENCY
PROJECT MANAGER FOR NON-STOCKPILE CHEMICAL MATERIEL
EDGEWOOD AREA, ABERDEEN PROVING GROUND, MD

EXPLOSIVE DESTRUCTION SYSTEM
PHASE 2 SERIES

A71700	P2 SERIES		
NEXT ASSY	USED ON		
APPLICATION			

CONTRACT NO.
DRAWN BY: SCHWINGHAMMER DATE 07/01/2009
CHECKED BY: SCHWINGHAMMER DATE 07/01/2009
APPROVED BY: B. HAROLDSON DATE 07/01/2009

Sandia National Laboratory
Livermore, California

ADVANCED FRAG SUPPRESSION SYSTEM
& GTR FULL LENGTH HOLDER
3D MODEL

SIZE E | CAGE CODE 14214 | PROJECT | DRAWING NO. A77881 | REV. -
SCALE NONE | FILE NAME A77881.IDW | SHEET 1 OF 2

REVISIONS				
REV	DESCRIPTION	DATE	APPROVED	

ALABAMA LICENSED 19743-E PROFESSIONAL ENGINEER JERRY L. BLEVINS

REV STATUS OF SHEETS	REV																			
	SH																			

CONTRACT NUMBER W911SR-12-D-0006
TASK NUMBER D-0019

leidos National Security Sector
2400-A Eisenhower Avenue, Alexandria, VA 22314

UNLESS OTHERWISE SPECIFIED–
DIMENSIONS ARE IN INCHES
ASME Y14.100M APPLIES
TOLERANCES:
.XX ±.02 .XXX ±.005 ∠ ±1° 125

DRAWN 08/26/2014 T. Thompson
CHK 08/26/2014 J. Blevins
TM APVD 08/26/2014 J. Blevins
APVD 08/26/2014 J. Blevins

TITLE
AFSS & GTR
FULL LENGTH HOLDER

MATERIAL —
FINISH —
APVD —
APVD —

SIZE D | CAGE CODE 0WR61 | DWG. NO. A77881 | REV —
SCALE NTS | SHEET 1 of 2

FILE NAME: A77881-sh1
SOFTWARE: — VERSION: —

—	—
—	—
NEXT ASSY	USED ON

FOLD LINE

D A77881

REVISIONS						
ISSUED BY	LTR	DESCRIPTION	DATE	CAD	CHKR	APPVD
TVA	-	SEE SHEET 1	11/30/09	DPB	SLC	TMM

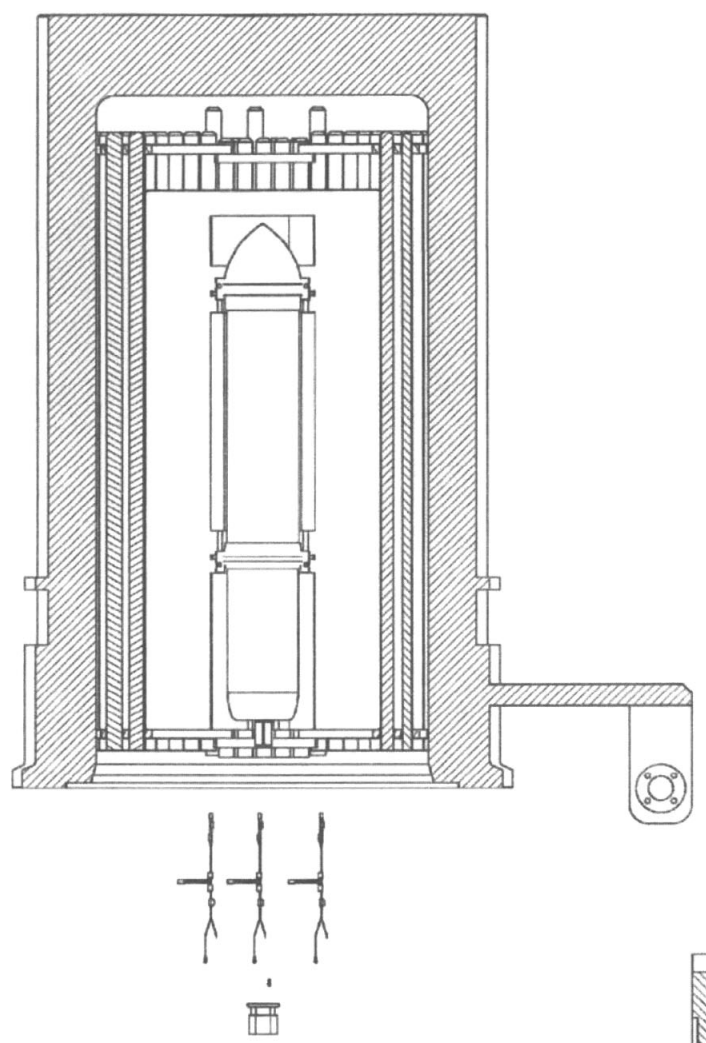

SECTION B-B

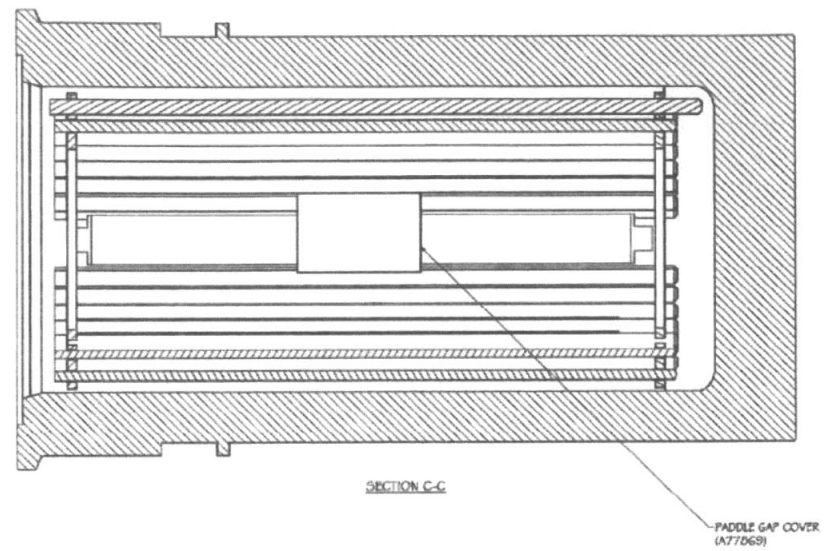

SECTION C-C

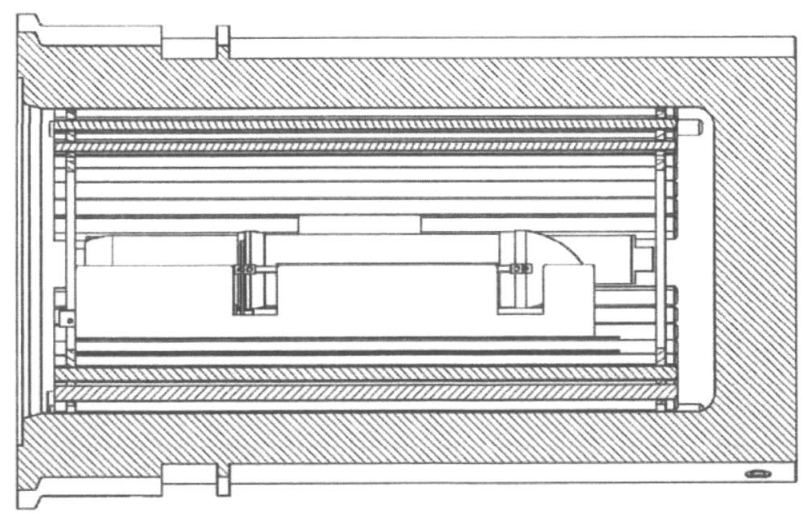

SECTION A-A

SUBSYSTEM: EC25

A77881 SH 1	P2 SERIES	SIZE	CAGE CODE	PROJECT	DRAWING NO.	REV
NEXT ASSY	USED ON	E	14214		A77881	-
APPLICATION		SCALE NONE	FILE NAME A77881.IDW	SHEET 2 OF 2		

REVISIONS			
REV	DESCRIPTION	DATE	APPROVED

REV STATUS OF SHEETS	REV																			
	SH																			

CONTRACT NUMBER W911SR-12-D-0006

TASK NUMBER D-0019

leidos National Security Sector

UNLESS OTHERWISE SPECIFIED-- DIMENSIONS ARE IN INCHES ASME Y14.100M APPLIES

TOLERANCES: .XX ±.02 .XXX ±.005 ∠ ±1° 125

DRAWN 08/26/2014 T. Thompson

CHK 08/26/2014 J. Blevins

TM APVD 08/26/2014 J. Blevins

APVD 08/26/2014 J. Blevins

MATERIAL —

APVD —

FINISH —

APVD —

TITLE AFSS & GTR FULL LENGTH HOLDER

SIZE	CAGE CODE	DWG. NO.	REV
D	0WR61	A77881	—
SCALE NTS			SHEET 2 of 2

ALABAMA LICENSED NO. 18746-E PROFESSIONAL ENGINEER JERRY L. BLEVINS

FILE NAME: A77881-sh2	
SOFTWARE: —	VERSION: —
—	—
—	—
NEXT ASSY	USED ON

FOLD LINE

D A77881 REV —

REVISIONS			
REV	DESCRIPTION	DATE	APPROVED

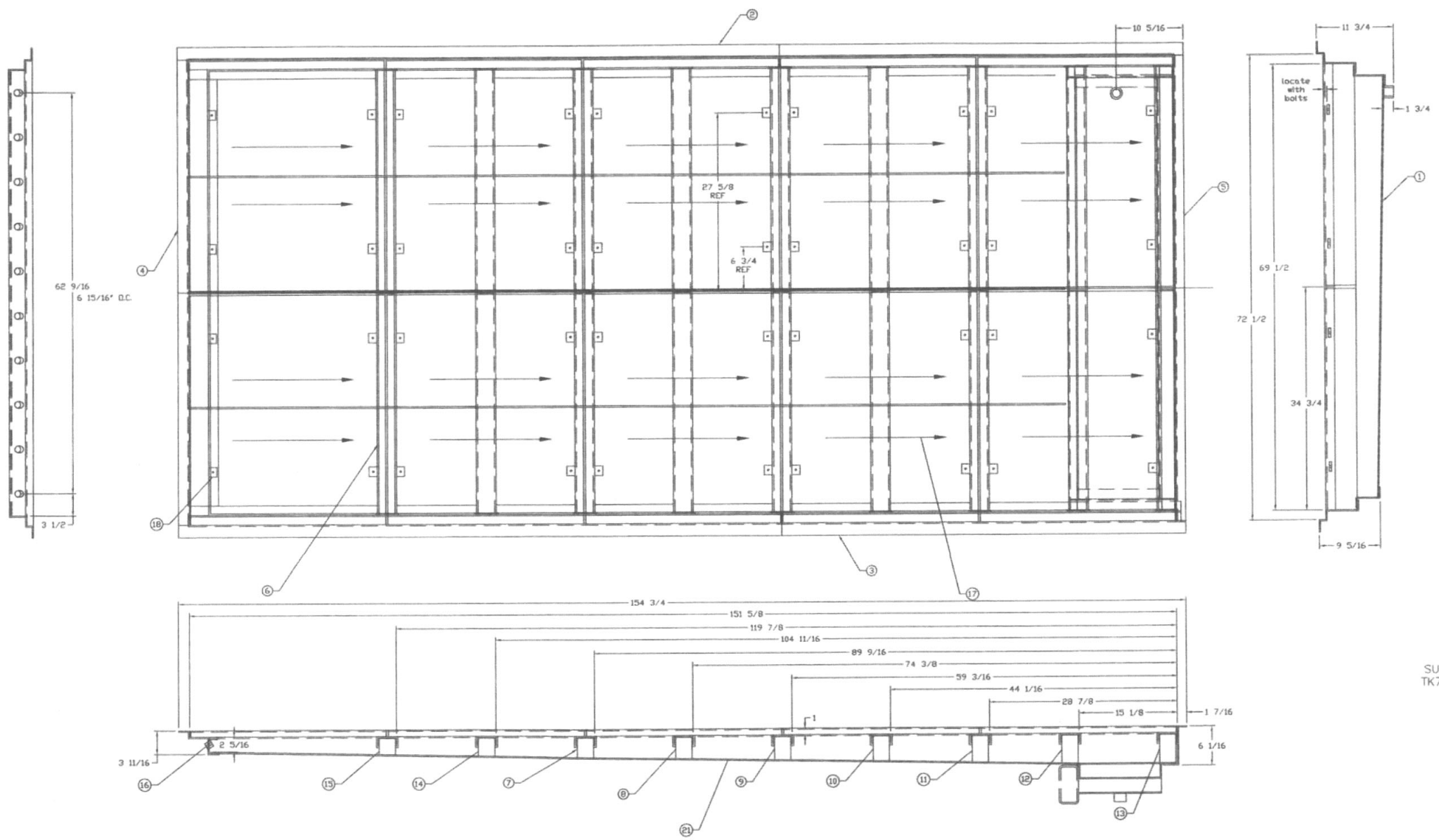

1	3510177	1	PIT WELDMENT
A1 2	3520445	1	SIDE – RH
A2 3	3520446	1	SIDE – LH
4	3520176	1	END – SPRAYER
5	3520447	1	END – PIT
6	3510147	9	CROSSMEMBER
7	3520448	1	SUPPORT
8	3520449	1	SUPPORT
9	3520450	1	SUPPORT
10	3520451	1	SUPPORT
11	3520452	1	SUPPORT
12	3520453	1	SUPPORT
13	3520454	1	SUPPORT
14	3520455	1	SUPPORT
15	3520456	1	SUPPORT
16	3520188	10	NOZZLE HOLDER
17	790050050	10	30" X 35 13/16" GRATE
18	3520187	40	GRATE HOLDDOWN
19	790050051	40	CB TYPE CLIP (NOT SHOWN)
20	–	40	1/4-20 X 1 3/4 SS CAPSCREW
21	3520457	1	BOTTOM

SUMP ASSEMBLY
TK70PS M2-01

NOTE:
TAKEN FROM BASE TRAILKING DRAWING 3510151

3510151

ALABAMA LICENSED No. 32143-E PROFESSIONAL ENGINEER JERRY L. BLEVINS

REV STATUS OF SHEETS	REV		
	SH		
CONTRACT NUMBER W911SR-12-D-0006	TASK NUMBER D-0019	leidos National Security Sector 2400-A Bee Hill Corporate Center Drive Arlington, MD 21009	
UNLESS OTHERWISE SPECIFIED– DIMENSIONS ARE IN INCHES ASME Y14.100M APPLIES	DRAWN 08/26/2014 T. Thompson	CHK 08/26/2014 J. Blevins	TITLE M2-01 SUMP ASSEMBLY TK70PS
TOLERANCES: .XX ±.02 .XXX ±.005 ∠ ±1° 125	TM APVD 08/26/2014 J. Blevins	APVD 08/26/2014 J. Blevins	
MATERIAL –	APVD –	SIZE D	CAGE CODE 0WR61 / DWG. NO. 3510151 / REV –
FINISH –	APVD –	SCALE NTS	SHEET 1 of 1

FILE NAME: 3510151	
SOFTWARE: –	VERSION: –
–	–
–	–
NEXT ASSY	USED ON

D 3510151 REV –

DEPARTMENT OF THE ARMY
US ARMY INSTALLATION MANAGEMENT COMMAND
HEADQUARTERS, UNITED STATES ARMY GARRISON, REDSTONE
4488 MARTIN ROAD
REDSTONE ARSENAL, ALABAMA 35898-5000

Received
SEP 26 2016
Land Division

REPLY TO
ATTENTION OF

SEP 23 2016

Environmental Management Division

Mr. Phillip D. Davis
Chief, Land Division
Alabama Department of Environmental Management
Post Office Box 301463
Montgomery, AL 36130-1463

Dear Mr. Davis:

References:

a. Installation Restoration Program at Redstone Arsenal, Alabama (EPA ID AL7 210 020 742).

b. Resource Conservation and Recovery Act Corrective Action Program at Redstone Arsenal, Alabama (EPA ID AL7 210 020 742)

c. Redstone Arsenal's Alabama Hazardous Wastes Management and Minimization Act Hazardous Waste Storage Facility/Thermal Treatment/Solid Waste Management Unit Corrective Action Permit, dated September 30, 2010, modification #8, dated June 3, 2016.

This letter transmits the submittal of the Revision 2 Corrective Measures Implementation Work Plan, RSA-204, Oxidizer Facility, Building 7691, US Army Garrison-Redstone, Madison County, Alabama for your review.

"I certify under penalty of law that this document and all attachments were prepared under my direction or supervision according to a system designed to assure that qualified personnel properly gather and evaluate the information submitted. Based on my inquiry of the person or persons who manage the system, or those persons directly responsible for gathering the information, the information submitted is, to the best of my knowledge and belief, true, accurate, and complete. I am aware that there are significant penalties for submitting false information, including the possibility of fine and imprisonment for knowing violations."

Copies of this correspondence are being furnished to Mr. Kel Morrissette, Alabama Department of Environmental Management; Mr. Alan Farmer, Resource Conservation and Recovery Act Division; Ms. Michelle Thornton, US Environmental Protection Agency, Region 4; Mr. Jeffrey L. Davis, US Army Environmental Command; Mr. John Guarisco, Alabama Department of Public Health; Ms. Samantha J. Strickland, Environmental Permits and Compliance; Mr. Dwight Cooley, Wheeler National Wildlife Refuge and Mr. Brian Roberson, Marshall Space Flight Center.

My point of contact for this matter is Ms. Terry de la Paz, Environmental Management Division, 256-955-6968 or e-mail terry.m.delapaz.civ@mail.mil.

Sincerely,

Terry W. Hazle
Chief, Environmental Management
Division

Enclosure

DEPARTMENT OF THE ARMY
US ARMY INSTALLATION MANAGEMENT COMMAND
HEADQUARTERS, UNITED STATES ARMY GARRISON, REDSTONE
4488 MARTIN ROAD
REDSTONE ARSENAL, ALABAMA 35898-5000

REPLY TO ATTENTION OF

SEP 2 3 2016

Environmental Management Division

Mr. Phillip D. Davis
Chief, Land Division
Alabama Department of Environmental Management
Post Office Box 301463
Montgomery, AL 36130-1463

Dear Mr. Davis:

References:

a. Installation Restoration Program at Redstone Arsenal, Alabama (EPA ID AL7 210 020 742).

b. Resource Conservation and Recovery Act Corrective Action Program at Redstone Arsenal, Alabama (EPA ID AL7 210 020 742)

c. Redstone Arsenal's Alabama Hazardous Wastes Management and Minimization Act Hazardous Waste Storage Facility/Thermal Treatment/Solid Waste Management Unit Corrective Action Permit, dated September 30, 2010, modification #8, dated June 3, 2016.

This letter transmits the submittal of the Revision 2 Corrective Measures Implementation Work Plan, RSA-204, Oxidizer Facility, Building 7691, US Army Garrison-Redstone, Madison County, Alabama for your review.

"I certify under penalty of law that this document and all attachments were prepared under my direction or supervision according to a system designed to assure that qualified personnel properly gather and evaluate the information submitted. Based on my inquiry of the person or persons who manage the system, or those persons directly responsible for gathering the information, the information submitted is, to the best of my knowledge and belief, true, accurate, and complete. I am aware that there are significant penalties for submitting false information, including the possibility of fine and imprisonment for knowing violations."

Copies of this correspondence are being furnished to Mr. Kel Morrissette, Alabama Department of Environmental Management; Mr. Alan Farmer, Resource Conservation and Recovery Act Division; Ms. Michelle Thornton, US Environmental Protection Agency, Region 4; Mr. Jeffrey L. Davis, US Army Environmental Command; Mr. John Guarisco, Alabama Department of Public Health; Ms. Samantha J. Strickland, Environmental Permits and Compliance; Mr. Dwight Cooley, Wheeler National Wildlife Refuge and Mr. Brian Roberson, Marshall Space Flight Center.

My point of contact for this matter is Ms. Terry de la Paz, Environmental Management Division, 256-955-6968 or e-mail terry.m.delapaz.civ@mail.mil.

Sincerely,

Terry W. Hazle
Chief, Environmental Management
Division

Enclosure

Revision 2
Corrective Measures Implementation Work Plan
RSA-204, Oxidizer Facility, Building 7691
Operable Unit 10
U.S. Army Garrison-Redstone
Madison County, Alabama
EPA ID No. AL7 210 020 742

Prepared for:

Mission & Installation Contracting Command
ATTN: MICC Center – FSH
2107 17th Street
Building 4197, Suite 15
Fort Sam Houston, Texas 78234-5015

Prepared by:

CB&I Federal Services LLC
2410 Cherahala Boulevard
Knoxville, Tennessee 37932

Contract No. W91ZLK-09-D-0006
CB&I Project No. 147104
Task Order 0008

September 2016

Revision 2
Corrective Measures Implementation Work Plan
RSA-204, Oxidizer Facility, Building 7691
Operable Unit 10
U.S. Army Garrison-Redstone
Madison County, Alabama
EPA ID No. AL7 210 020 742

Certification

I certify under penalty of law that this document and all attachments were prepared under my direction or supervision in accordance with a system designed to assure that qualified personnel properly gather and evaluate the information submitted. Based on my inquiry of the person or persons who manage the system, or those persons directly responsible for gathering the information, the information submitted is, to the best of my knowledge and belief, true, accurate, and complete. I am aware that there are significant penalties for submitting false information, including the possibility of fine and imprisonment for knowing violations.

C. Scott Wilson

C. Scott Wilson
Alabama PE No. 28340

ALABAMA LICENSED No. 28340 PROFESSIONAL ENGINEER CHARLES SCOTT WILSON

9/22/16
Date

Table of Contents

Page

List of Tables v
List of Figures vi
Executive Summary ES-1
1.0 Introduction 1-1
1.1 Purpose 1-1
1.2 RSA-204 1-2
1.3 Document Organization 1-5
2.0 Investigation Results 2-1
2.1 Investigation History 2-1
2.2 Nature and Extent of Contamination 2-1
2.3 Fate and Transport Summary 2-3
2.3.1 Summary of the Site-Specific Physical Setting 2-4
2.3.2 Summary of RSA-204 Fate and Transport Evaluation 2-5
2.3.2.1 Leaching from Soil to Groundwater 2-5
2.3.2.2 Advective Transport in Groundwater 2-6
2.4 Site Risk Summary 2-8
2.4.1 Land and Resources Use 2-8
2.4.2 ARBCA Human Health Evaluation 2-9
2.4.2.1 PSL Evaluation 2-10
2.4.2.2 RM-2 Cumulative Risk Evaluation 2-11
2.4.2.3 Other Relevant Exposure Pathways 2-11
2.4.3 Screening-Level Ecological Risk Assessment 2-12
2.5 Final Conceptual Site Model 2-13
2.6 Summary 2-14
3.0 Decision Summary 3-1
3.1 Basis for the Action 3-1
3.1.1 Identification of the Corrective Measure Objectives and Cleanup Goals 3-1
3.1.1.1 Corrective Measure Objectives 3-2
3.1.1.2 Corrective Measure Cleanup Goals 3-2
3.2 Applicable Regulations 3-2
3.3 Selected Corrective Measure Cleanup Goals 3-3
3.4 Scope and Role of Response Action 3-3
3.4.1 Overall Remedial Strategy for Redstone Arsenal 3-4

Table of Contents

Page

3.4.2 Scope of Problems Addressed by RSA-204 Corrective Measures 3-5
3.5 Extent of Contaminated Soil 3-5
3.6 Extent of Contaminated Groundwater 3-5
3.7 Corrective Measures Evaluation and Selection 3-6
3.7.1 Summary of the Corrective Measures Alternatives Evaluation 3-6
3.7.2 Selected Corrective Measures - Groundwater ISEB via Injection, Soil Excavation, Localized Cap (Building 7689 Area), Groundwater MNA, and LUCs 3-7
3.8 Request for Permit Modification 3-7
4.0 Corrective Measures Implementation 4-1
4.1 General Scope 4-1
4.1.1 Procurement and Subcontracting 4-2
4.1.2 Field Personnel 4-4
4.2 Preliminary Activities 4-4
4.2.1 Mobilization 4-4
4.2.2 Access to Redstone Arsenal 4-4
4.2.3 Site Control 4-5
4.2.4 Storm Water Erosion and Sediment Controls 4-5
4.2.5 Vegetation Clearing 4-6
4.2.6 Locating, Marking, and Surveying of Injection Locations and Excavation Areas 4-6
4.2.7 Well Installation 4-6
4.3 Baseline Groundwater Sampling and Well Closure and Replacement 4-6
4.4 Berm Removal 4-9
4.5 Groundwater Treatment Activities 4-9
4.5.1 Temporary Facilities and Work Areas 4-11
4.5.2 Injection Reagent Mixing 4-11
4.5.3 Material Handling and Storage 4-12
4.5.4 Reagent Injection 4-12
4.5.5 Field Records 4-13
4.6 Excavation Activities 4-13
4.7 Confirmation Sampling 4-15
4.8 Remediation-Derived Waste/Investigation-Derived Waste Management 4-16
4.9 Waste Characterization Sampling 4-18

Table of Contents

Page

4.10 Waste Soil Transportation and Disposal 4-19
4.11 Cap Construction and Post-Excavation Activities 4-20
4.11.1 ISEB Application 4-20
4.11.2 Backfilling 4-20
4.11.3 Cap Construction 4-22
4.11.4 Site Restoration 4-23
4.11.5 Equipment Decontamination 4-24
4.11.6 Temporary Storm Water Erosion and Sediment Control Removal 4-24
4.12 Demobilization 4-24
4.13 Inspections for Field Activities 4-24
4.14 Land-Use Controls 4-25
4.14.1 Survey Plat 4-26
4.14.2 Environmental Use Restriction 4-26
4.15 Corrective Measures Implementation Reporting 4-27
4.16 Post-Construction Scheduled Activities 4-27
4.16.1 Cap Operation and Maintenance 4-27
4.16.2 Groundwater Monitoring and Data Evaluation 4-27
4.16.2.1 Data Evaluation and Interpretation 4-28
4.16.2.2 Reporting 4-29
4.16.3 Inspections 4-30
4.16.4 Reporting 4-30
5.0 Contingencies 5-1
5.1 Excavation Beyond Proposed Boundaries 5-1
5.2 Discovery of Subsurface Contaminant Sources 5-1
5.3 Excavation Dewatering 5-2
5.4 Excavation of Unknown Utilities 5-2
5.5 Saturated Soil Removal 5-2
5.6 Discovery of Munitions and Explosives of Concern/Chemical Warfare Materiel ... 5-2
6.0 References 6-1
Attachment 1 – List of Abbreviations and Acronyms
Tables
Figures
Appendices

Table of Contents

Page

Response to Comments
Appendix A – Soil and Groundwater Analytical Data Tables
Appendix B – Request for Permit Modification
Appendix C – Corrective Measures Implementation Schedule
Appendix D – Site-Specific Safety and Health Plan
Appendix E – Construction Quality Assurance Plan
Appendix F – Data Collection Quality Assurance Plan
Appendix G – Best Management Practices
Appendix H – Engineering Calculations
Appendix I – Underground Injection Control Permit
Appendix J – Notice of Environmental Use Restrictions
Appendix K – Long-Term Monitoring Plan

List of Tables

Tables	*Title*	*Follows Tab*
2-1	Summary of Receptor Cancer Risk and Noncancer Hazard for Chemicals of Concern, Reasonable Maximum Exposure	
2-2	Conclusions of the ARBCA RM-2 Evaluation	
3-1	Potential Federal and State Regulations Applicable to Groundwater Corrective Measures	
3-2	Groundwater and Soil Cleanup Goals	
4-1	Groundwater Elevation Summary, Overburden and Interface Wells Adjacent to Excavation Areas 1 and 2	

List of Figures

Figure	Title	Follows Tab
1-1	RSA-204 Site Location Map	
1-2	RSA-204 Site Map	
2-1	RSA-204 Sampling Locations	
2-2	RSA-204 Perchlorate Concentrations in Soil (0 to 4 feet below ground surface)	
2-3	RSA-204 Perchlorate Concentrations in Soil (4 to 8 feet below ground surface)	
2-4	RSA-204 Perchlorate Concentrations in Soil (8 to 12 feet below ground surface)	
2-5	RSA-204 Perchlorate Concentrations in Soil (12 to 16 feet below ground surface)	
2-6	RSA-204 Perchlorate and Trichloroethene Concentrations in Groundwater	
2-7	RSA-204 Top of Bedrock Elevation and Shallow Potentiometric Surface (April 2016)	
2-8	RSA-204 Cross Section Location Map	
2-9	RSA-204 North-South Cross-Section	
2-10	RSA-204 West 1 – East 1 Cross-Section	
2-11	RSA-204 West 2 – East 2 Cross-Section	
2-12	RSA-204 Historical Release Points in Relation to Perchlorate in Soil and Groundwater	
2-13	RSA-204 Conceptual Site Model	
4-1	RSA-204 Proposed Groundwater ISEB Treatment Layout	
4-2	RSA-204 Proposed Excavation Areas	
4-3	RSA-204 Long Term Monitoring Locations for Groundwater	
4-4	RSA-204 Proposed Confirmation Soil Sample Locations	
4-5	RSA-204 Sidewall Confirmation Sampling Approach (Perchlorate)	
4-6	RSA-204 Site Utility Layout and Location of Foundation Protection (Building 7689)	

Executive Summary

CB&I Federal Services LLC, on behalf of the U.S. Army Garrison-Redstone, has prepared this corrective measures implementation work plan for Redstone Arsenal, Madison County, Alabama, under the management of the U.S. Army Environmental Command. The Mission & Installation Contracting Command has contracted CB&I Federal Services LLC under Contract Number W91ZLK-09-D-0006 to perform environmental remediation, restoration, and program management services at Redstone Arsenal under the Resource Conservation and Recovery Act Corrective Action program. This corrective measures implementation work plan has been developed to provide technical guidance for implementing soil and groundwater corrective measures selected for RSA-204, Oxidizer Facility, Building 7691. This work plan incorporates applicable elements of Redstone Arsenal's Hazardous Wastes Management and Minimization Act Hazardous Wastes Storage Facility/Thermal Treatment/Solid Waste Management Unit Corrective Action Permit, Modification No. 8, and the most recent edition of the Alabama Environmental Investigation and Remediation Guidance. This work plan is submitted to fulfill, in part, the requirements listed in Section VI.E.1 of the Permit. As specified in Section VI.E.3 of the Permit, a request for permit modification is included as part of this plan.

The U.S. Army Garrison-Redstone intends to clean up the groundwater contamination and the ongoing sources of contamination to groundwater at RSA-204. Perchlorate in soil poses an ongoing leaching threat to groundwater from the soil-to-groundwater migration pathway, and future potable use of groundwater beneath RSA-204 would pose an unacceptable threat to human health due to the elevated concentrations of perchlorate, trichloroethene, and explosive compounds.

The following cleanup goals have been set to achieve the corrective measure objectives:

Chemical of Concern	Groundwater Cleanup Goals (micrograms per liter)	Basis	Soil Cleanup Goals (milligrams per kilogram)	Basis
Perchlorate	15	Health Advisory Level	1.7	Synthetic Precipitation Leaching Procedure-Based Soil Screening Level
2-Nitrotoluene	0.7	Cumulative Risk	Not Applicable	Not Applicable
2,6-Dinitrotoluene	0.1	Cumulative Risk	Not Applicable	Not Applicable
RDX	0.5	Cumulative Risk	Not Applicable	Not Applicable
Trichloroethene	5	Maximum Contaminant Level	Not Applicable	Not Applicable

The selected corrective measures address the groundwater and soil contamination by implementing the following:

- In situ enhanced bioremediation of perchlorate, trichloroethene, and explosives by the direct injection of buffered emulsified vegetable oil and nutrient amendments to promote anaerobic degradation by native microorganisms
- Excavation of perchlorate-contaminated vadose zone soil to the average depth of the water table with off-site disposal
  - Approximately 10,500 cubic yards from the central portion of the site
  - Approximately 1,560 cubic yards from the southeastern portion of the site
- Covering of residual perchlorate-contaminated soil above the cleanup goal adjacent to the foundation of active Building 7689 with an impermeable concrete cap where excavation is impractical
- Land-use controls for inaccessible perchlorate-contaminated soil under the localized cap in the Building 7689 area
- Monitored natural attenuation and long-term monitoring.

The U.S. Army Garrison-Redstone has elected to perform corrective measures to remove and dispose of perchlorate-contaminated soils from two areas within RSA-204 to achieve conditions suitable for industrial or commercial reuse. Contaminated soil with perchlorate concentrations above the cleanup goal that cannot be removed due to its location immediately adjacent to Building 7689 will be capped to prevent future leachate production, migration, and subsequent contaminant loading to the underlying groundwater. Land-use controls will be used to maintain the integrity of the localized cap in the Building 7689 area. The Army intends that the remainder of the surface media site will be a candidate for no further action and unrestricted use following the completion of the soil corrective measures.

Perchlorate-impacted groundwater will be treated within two source areas with perchlorate concentrations exceeding approximately 10,000 micrograms per liter. Approximately 37 locations will be required to effectively distribute the substrate in both source areas and approximately 21 locations will be used to treat the perimeter areas. Emulsified vegetable oil and nutrient amendments will be mixed with potable water and injected into the contaminated saturated zone from bedrock to the top of the groundwater table to enhance anaerobic biodegradation of perchlorate. Injections will be pressurized and completed using a direct-push technology drill rig. While the injections will specifically target the perchlorate-contaminated groundwater, the relatively low trichloroethene and explosives concentrations are expected to decrease below their cleanup goals through monitored natural attenuation and will be evaluated through long-term

groundwater monitoring to document the performance of the corrective measures to achieve the cleanup goals.

1.0 Introduction

CB&I Federal Services LLC (CB&I), on behalf of the U.S. Army Garrison-Redstone (hereinafter referred to as the Army), has prepared this corrective measures implementation (CMI) work plan for Redstone Arsenal (RSA), Madison County, Alabama, under the management of the U.S. Army Environmental Command. The Mission & Installation Contracting Command has contracted CB&I under Contract Number W91ZLK-09-D-0006 to perform environmental remediation and restoration and program management services at RSA under the Resource Conservation and Recovery Act (RCRA) Corrective Action program in accordance with RSA's Alabama Hazardous Wastes Management and Minimization Act Hazardous Waste Storage Facility/Thermal Treatment/Solid Waste Management Unit Corrective Action Permit, Modification No. 8, dated June 3, 2016 (hereinafter referred to as the Permit) (U.S. Environmental Protection Agency [EPA] ID #: AL7 210 020 742) (Alabama Department of Environmental Management [ADEM], 2016). This CMI work plan has been developed to provide technical guidance for implementing the groundwater and soil corrective measures selected for Solid Waste Management Unit (SWMU) RSA-204, Oxidizer Facility, Building 7691.

This CMI work plan incorporates applicable elements of the Permit and the most recent edition of the Alabama Environmental Investigation and Remediation Guidance (AEIRG) (ADEM, 2005). This CMI work plan is submitted to fulfill in part the requirements listed in Section VI.E.1 of the Permit. As specified in Section VI.E.3, a request for permit modification is included as part of this work plan. This plan protects human health and the environment from hazardous constituents at concentrations exceeding applicable limits.

1.1 Purpose

The purpose of this CMI work plan is to describe the corrective measures selected for use at RSA-204 to address perchlorate-contaminated soil and perchlorate, trichloroethene (TCE), and explosive compounds in groundwater. The nature and extent of contamination was presented in the RSA-204 RCRA facility investigation (RFI) report (Shaw Environmental, Inc. [Shaw], 2013a) which was approved by ADEM on March 4, 2014. An Alabama Risk-Based Corrective Action (ARBCA) evaluation for human health and a screening-level ecological risk assessment (SLERA) were prepared for RSA-204 as part of the RFI. This evaluation concluded that perchlorate in soil has been found to pose no unacceptable health threats to current or future receptors. However, perchlorate present in soil is acting as a continuing source of contamination to groundwater, and therefore, removal of the soil exceeding the perchlorate cleanup goal (CG) is proposed to meet the soil corrective measure objective (CMO) for the site. Perchlorate, TCE, and three explosive compounds (2-nitrotoluene, 2,6-dinitrotoluene, and RDX) in groundwater

potentially pose unacceptable risks if groundwater is used as a future potable water source. Treatment of the groundwater is proposed to meet the groundwater CMO.

This CMI work plan has been prepared to describe the technical approach and rationale for conducting the field activities that will be performed prior to and during implementation of the corrective measures.

1.2 RSA-204

RSA-204 is part of Operable Unit (OU) 10, which includes sites that had been potentially impacted by the historical use of the Redstone Arsenal Rocket Engine North Plant for rocket motor testing and production. Groundwater beneath the site (including the saturated zone soils) is included in the RSA-146 groundwater unit. RSA-204 is located in the northwestern portion of the RSA-146 groundwater unit, at the intersection of Eagle and Magazine Roads (Figures 1-1 and 1-2). The site encompasses approximately 8.5 acres and consists of existing Buildings 7687, 7688, 7689, 7690, and 7691, which the Army constructed in 1978 to support Thiokol Corporation (Thiokol) rocket motor support operations. Oxidizer was received at the service facility (Building 7687), and explosives were dried at Building 7688. The oxidizer and explosives were transported to the grinding and processing facilities (Buildings 7689, 7690, and 7691), where they were screened and ground. Following processing, the oxidizer powder was transported to nearby mixing facilities. The entire operation was deactivated between 1993 and 1996.

The buildings located within the RSA-204 site and their former and current functions are described as follows:

- ***Building 7687, Oxidizer Service (Storage) Building.*** Building 7687 served as an oxidizer storage facility. Oxidizers stored in Building 7687 prior to being transported to Buildings 7689, 7690, and 7691 included ammonium perchlorate and sodium chloride. During a 2003 visual site inspection, the concrete floor appeared intact. Features noted at Building 7687 included two loading bay doors on the east and west sides of the building, a drum hoist system, and a shallow drainage ditch running along the south and east sides of the building (Shaw, 2005). Building 7687 is currently used by the Aviation and Missile Research, Development, and Engineering Center for inert materials storage.

- ***Building 7688, Class 1.1 Nitramine Drying Facility.*** Building 7688 served as a Class 1.1 nitramine drying facility. The general procedure for drying consisted of receiving containers of HMX and RDX. The explosives were removed from the shipping container and air dried for several days. The dried HMX and RDX were then recontainerized and transported to Building 7690 for grinding and processing. HMX, RDX, and isopropyl alcohol are listed as having been used in Building 7688 (Shaw, 2005). Building 7688 is currently used by the Aviation and Missile Research,

Development, and Engineering Center for live explosive work, both attended and remote, depending on the program.

- ***Building 7689, Ammonium Perchlorate Grinding Facility.*** Building 7689 was used as an ammonium perchlorate grinding facility. Ammonium perchlorate is the only chemical listed as having been used in Building 7689 (Shaw, 2005). The general procedure for oxidizer grinding began with receiving ammonium perchlorate from the storage facility (Building 7687). Oxidizers were then screened and ground. This process involved passing the oxidizer through a screen and a magnetic separator immediately prior to entering a grinder or pulverizer to assure removal of extraneous material. Dry oxidizers were ground in impact-type mills to a very fine powder. Dehumidifiers were used in the grinding facilities to enable the ground mixture to remain in a fine powder state. The powder was then containerized and transported to mixing facilities outside of RSA-204. Building 7689 is currently used by the Aviation and Missile Research, Development, and Engineering Center for live explosive work, both attended and remote, depending on the program.

- ***Building 7690, Nitramine Grinding Facility.*** Building 7690 was used as a nitramine (HMX/RDX) grinding facility. The general procedure for nitramine grinding began with receiving dried HMX and RDX from the nitramine drying facility (Building 7688). The explosives were then screened and ground. This process involved passing the explosives through a screen and a magnetic separator immediately prior to entering a grinder or pulverizer to assure removal of extraneous material. Dry materials were ground in impact-type mills to a very fine powder. Dehumidifiers were used in the grinding facilities to enable the ground mixture to remain in a fine powder state. The powder was then containerized and transported to nearby mixing facilities. HMX and RDX are the only chemicals listed as having been used in Building 7690 (Shaw, 2005). Building 7690 is currently used by the Aviation and Missile Research, Development, and Engineering Center for live explosive work, both attended and remote, depending on the program.

- ***Building 7691, Ammonium Perchlorate Processing Facility.*** Building 7691 was used as an ammonium perchlorate processing facility. Oxidizers were processed in Building 7691 after being received from the ammonium perchlorate storage facility (Building 7687). Dry oxidizers were ground in impact type mills to a very fine powder. The process involved passing the oxidizer through a screen and a magnetic separator to remove extraneous material prior to entering the grinder or pulverizer. Dehumidifiers were used in the grinding facilities to enable the ground mixture to remain in a fine powder state. The powder was then containerized and transported to nearby mixing facilities outside of RSA-204. Ammonium perchlorate, petroleum hydrocarbons, and sodium chloride are listed as having been used in Building 7691 (Shaw, 2005). Building 7691 is currently used by the Aviation and Missile Research, Development, and Engineering Center for live explosive work, both attended and remote, depending on the program.

Nine other RCRA sites, RSA-135m, RSA-137j, RSA-137k, RSA-137l, RSA-138j, RSA-138k, RSA-138l, RSA-180, and RSA-181, all currently designated as no-further-action sites in the

Permit, were former sumps or temporary storage areas and are located within RSA-204 (ADEM, 2016) (Figure 1-1).

The land use zone at RSA-204 is industrial. The Army has no plans to release this property for non-U.S. Department of Defense (DoD) use.

The five buildings at the site are separated by driveways, roads, and open grass- or tree-covered areas. Several blast berms are also present at the site due to explosives handling at the site buildings.

Regional geology and hydrogeology at RSA-204 are presented in the RFI report (Shaw, 2013a) and further discussed in Section 2.3.1. Average depth to groundwater in overburden and interface wells in proximity to RSA-204 fluctuates seasonally, ranging from approximately 6.5 to 23 feet below ground surface (bgs). Monthly groundwater elevation measurements have been obtained from wells at the RSA-204 site since the fall of 2015. These data, presented in Section 2.3.1, have been used to further evaluate the average depth to groundwater in the most contaminated portion of the site. The overburden (residuum) varies in thickness from approximately 20 to 40 feet across the site.

Environmental investigations were initiated at RSA-204 in 1996 to determine if and to what extent historical site operations had impacted the environment (Conestoga Rovers & Associates [CRA], 1996; CH2M Hill, 1998). Three sets of data were collected and used to determine the nature and extent of contamination at the RSA-204 site:

- Soil and groundwater data up to 2011; a majority of these data were collected to support the potential source area investigations (Shaw, 2005) and the OU-10 perchlorate investigations (CB&I, 2015a; Shaw, 2008). The remaining few samples not accounted for in these two investigations were part of the Redstone Arsenal Rocket Engine environmental baseline surveys (CRA, 1996; CH2M Hill, 1998) and confirmation sampling at RSA-180 and RSA-181 (Bhate Environmental Associates, Inc., 2003).

- Soil and groundwater data from 2011 and 2012; a comprehensive data set was collected for the RFI to determine the nature and extent of soil and overburden groundwater contamination at the RSA-204 site (Shaw, 2013a).

- Soil and groundwater data from the 2014 design study (CB&I, 2014; 2016); these data were acquired after the RFI to optimize the corrective measures design. Design study analytical results were incorporated into this CMI work plan. The soil and groundwater data collected to support the design study are presented in Appendix A.

The RFI report (Shaw, 2013a) was approved by ADEM on March 4, 2014. A copy of the ADEM approval letter is included in Appendix B. A conclusion of the fate and transport evaluation in the RFI report was that perchlorate concentrations in soil above the leachate-based soil screening level (SSL) (1.7 milligrams per kilogram [mg/kg]) in two site locations are a leaching source to groundwater. Conclusions of the risk evaluation follow:

- RSA-204 poses no unacceptable health threat to commercial/industrial or residential receptors from exposure to soils.
- RSA-204 may pose an unacceptable health threat to commercial/industrial or residential receptors from direct exposure to perchlorate, TCE, 2,6-dinitrotoluene, 2-nitrotoluene, and RDX in groundwater developed as a potable source.
- A screening-level vapor intrusion evaluation showed that volatile organic compound (VOC) concentrations in soil gas, soil, and groundwater are unlikely to pose an unacceptable health threat to occupants of current or future buildings.
- The results of the SLERA indicated that chemicals of potential environmental concern (COPEC) in surface soil at RSA-204 are unlikely to pose hazards to ecological receptors.

Per the ARBCA guidance, corrective measures for soil are needed at the RSA-204 site because, although representative site concentrations do not yield risk estimates that exceed the acceptable cumulative risk levels, perchlorate concentrations in soil will continue to be a source to groundwater. Chemicals of concern (COC) (perchlorate, TCE, and three explosive compounds) in groundwater potentially pose an unacceptable threat if the groundwater is used as a future potable water source. While there is no current potable use of groundwater at RSA-204 and such use is controlled by land-use controls (LUC) (Shaw, 2007), future potable use of groundwater must be considered in the ARBCA process to ensure protectiveness of the remedy and to promote resource conservation (ADEM, 2008). Corrective measures are therefore needed to address both soil and groundwater at RSA-204.

1.3 Document Organization

This CMI work plan is organized into the following six chapters:

- ***Chapter 1.0, Introduction,*** presents the purpose and overview of the document and includes a brief site description, including the topography, geology, and hydrogeology associated with the site.
- ***Chapter 2.0, Investigation Results,*** presents additional background information about the project sites, including nature and extent of contamination, fate and transport summary, site risks, and the final site conceptual site model (CSM).

- ***Chapter 3.0, Decision Summary,*** describes the basis for the action, including the CMOs, CGs, and a summary of the corrective measures.

- ***Chapter 4.0, Corrective Measures Implementation,*** describes the support and field activities necessary to implement the corrective measures for soil and groundwater.

- ***Chapter 5.0, Contingencies,*** describes the potential for variances which could arise during execution of the corrective measures described herein.

- ***Chapter 6.0, References,*** provides the references that contributed to the preparation of this CMI work plan.

The following plans and supporting documentation are included as appendices to this CMI work plan:

- ***Appendix A***: Soil and Groundwater Analytical Data Tables
- ***Appendix B***: Request for Permit Modification
- ***Appendix C***: CMI Schedule
- ***Appendix D***: Site-Specific Safety and Health Plan (SSHP)
- ***Appendix E***: Construction Quality Assurance Plan (CQAP)
- ***Appendix F***: Data Collection Quality Assurance Plan (DCQAP)
- ***Appendix G***: Best Management Practices (BMP)
- ***Appendix H***: Engineering Calculations
- ***Appendix I***: Underground Injection Control Permit
- ***Appendix J***: Notice of Environmental Use Restrictions (EUR) Plan
- ***Appendix K***: Long-Term Monitoring Plan.

2.0 Investigation Results

This chapter presents additional background information for RSA-204, including nature and extent of contamination, fate and transport, site risks, and the CSM.

2.1 Investigation History

Initial site characterization work at RSA-204 was conducted as a part of more comprehensive investigations within the former OU-10. The initial sampling was completed to support the EBS (CRA, 1996; CH2M Hill, 1998) and to complete confirmation sampling at RSA-180 and RSA-181 (Bhate, 2003). This work was followed by the potential source area investigation (Shaw, 2005), OU-10 investigations (Shaw, 2008; CB&I, 2015a), and the RFI/design study work (CB&I, 2014; 2015a; 2016). The total data set evaluated to support the CMI includes 58 surface soil samples, 326 subsurface soil samples, 1 soil vapor sample, and 78 groundwater samples (18 screening-level and 60 definitive-level samples) (Figure 2-1). Figure 2-1 notes the new and existing monitoring wells and soil borings sampled in 2014. The release points at the site have been identified and investigated, and the nature and extent of contamination in surface media at RSA-204 has been delineated. Groundwater impacts from contaminated surface media at this site have also been adequately characterized.

2.2 Nature and Extent of Contamination

Available analytical results indicate historical operations have led to localized contamination of the subsurface soil and groundwater at the site. Site soils are contaminated by perchlorate. Site groundwater is contaminated by perchlorate, TCE, and three explosive compounds (2-nitrotoluene, 2,6-dinitrotoluene, and RDX). There are two areas of contaminated soil at the site:

- ***Central Area*** – An area of perchlorate in soil exceeding the preliminary screening level (PSV)/leachate-based SSL exists in the forested area between Buildings 7687, 7688, and 7691 (Figures 2-2 through 2-5).
- ***Southeastern Area*** - An area of perchlorate in soil exceeding the PSV/leachate-based SSL exists northeast of Building 7689, associated with a captive sump located northeast of the building (Figures 2-2 through 2-5).

Past releases of perchlorate at RSA-204 are related to perchlorate processing operations within the site boundary. The screening values used to evaluate nature and extent of contamination are presented in detail in the approved RFI (Shaw, 2013a). Additional data collected during implementation of the design study fieldwork (CB&I, 2014) have been incorporated into this CMI work plan.

Summary of Contaminant Nature and Extent. Figure 2-1 presents the sample locations at RSA-204. The subsurface soil and groundwater data from the 2014 corrective measures design study are presented in Appendix A. Data collected through 2012 are presented in the RFI report (Shaw, 2013a).

Metals. The results of the comprehensive evaluation of metals in surface and subsurface soil during the RFI (Shaw, 2013a) indicate that a majority of metals are naturally occurring. Select results for chromium, copper, and selenium in surface soil were considered to be anomalous and further evaluated in fate and transport or risk evaluations; all metals in surface soil were bounded by concentrations determined to be naturally occurring. Metals concentrations in the subsurface soil and groundwater samples are naturally occurring.

Perchlorate. Documented perchlorate usage within the site has led to the release of perchlorate to soil and groundwater northeast of Building 7691 (central portion of the site) and east of Building 7689 (southeastern portion of the site). Analytical results from surface soil samples collected within the RSA-204 site were all less than the residential soil PSV or leachate-based SSL. Perchlorate concentrations in excess of the residential soil PSV and the leachate-based SSL were identified in the subsurface vadose zone soils. Perchlorate contamination in soil extends to the average depth of groundwater in both areas (approximately 15 feet bgs in the central area and 17 feet bgs in the southeastern area) and is associated with dissolved perchlorate contamination plumes in groundwater with perchlorate concentrations in excess of 10,000 micrograms per liter (µg/L).

Perchlorate in Soil. The summer 2014 perchlorate subsurface soil analytical data were incorporated into the RFI data set, and revised maps illustrating perchlorate concentrations within site soils were created. The maps are presented, by subsurface interval, as Figures 2-2 (0 to 4 feet bgs interval), 2-3 (4 to 8 feet bgs interval), 2-4 (8 to 12 feet bgs interval), and 2-5 (12 to 16 feet bgs interval). As shown on this series of figures, the 2014 data confirmed the previously identified perchlorate exceedances in the central and southeastern portions of the site.

Perchlorate in Groundwater. An isoconcentration map of perchlorate in groundwater (composite of the overburden, interface, and shallow bedrock zones) using the summer 2014 perchlorate groundwater analytical results is presented as Figure 2-6. The data shown on Figure 2-6 confirm the RFI concentrations, which showed a perchlorate plume in groundwater containing concentrations exceeding 10,000 µg/L beneath the site. Maximum perchlorate concentrations were reported from well K142-RS1224 (100,000 µg/L in 2012 and 98,300 µg/L in 2014), which is located adjacent to the sump northeast of Building 7689. Perchlorate concentrations in bedrock wells range from 2.58 µg/L in downgradient well 204-RS2668 to

2,710 µg/L in well 204-RS2670. The vertical extent of perchlorate exceedances beneath the sump northeast of Building 7689 were delineated by bedrock well 204-RS2671 (4.11 µg/L), which is located adjacent to K142-RS1224.

VOCs. VOCs may have been released from this site, but soil data indicated that a source does not remain at the site, as only trace levels of VOCs have been detected in soil at concentrations below their applicable PSVs and SSLs.

TCE was detected in a groundwater sample from overburden well 204-RS2683 (located north of Building 7691) at a concentration (11.3 µg/L) above the PSV in 2014. TCE concentrations in the summer 2014 data are presented in Figure 2-6.

Semivolatile Organic Compounds. The RFI data indicated semivolatile organic compound (SVOC) polynuclear aromatic compound occurrences were not prevalent throughout site soils, as only one isolated PSV exceedance (dibenz[a,h]anthracene) was present in a historical subsurface soil sample. The location has been bounded on all sides to below the PSV. The PSV exceedance was evaluated in the human health risk assessment. Data further suggest that SVOCs (e.g., constituents of petroleum products) were not released during historical industrial operations at the RSA-204 site.

Explosive Compounds. Soil analytical data indicated only localized, relatively low detections of explosive compounds in site soils. Explosives were detected at concentrations exceeding the RSA-specific dilution-attenuation factor $(DAF)_4$ SSL and were evaluated in the fate and transport evaluation. However, no explosive compounds were detected in soil at concentrations exceeding the PSVs. Groundwater PSV exceedances of explosive compounds were generally detected at relatively low concentrations (less than 1 µg/L) and are scattered across the site. However, 2-nitrotoluene was detected in downgradient well K-RS690 at a concentration of 219 µg/L, which exceeds the PSV of 0.27 µg/L. Concentrations of 2,6-dinitrotoluene, RDX, nitrobenzene, and 1,3-dinitrobenzene also exceeded the PSVs in groundwater (Shaw, 2013a).

Other Analytes. PCBs and cyanide were analyzed for in select soil samples and were not detected.

2.3 Fate and Transport Summary

Contaminant fate and transport is dictated by the physical and chemical characteristics of the site-related contaminants. The effects of physical, chemical, and biological processes on the constituents control the potential fate (degradation) and transport (movement). The fate and transport evaluation provides key input to the human health risk assessment by identifying all

transport mechanisms working at the site and subsequently determining which exposure pathways are relevant to the risk evaluation. A summary of the site-specific fate and transport mechanisms working at the RSA-204 site is presented here.

2.3.1 Summary of the Site-Specific Physical Setting

The physical setting influences both the migration of contaminants from the site and the fate of contaminants once they enter the environment. The following elements of the physical setting are pertinent to the preparation of this CMI work plan:

- ***Topography and Surface Water Hydrology.*** The natural topography in the former Thiokol North Plant area has been heavily modified, and all surface drainage is controlled by the historical engineered drainageways. There are no permanent or seasonal surface water bodies at the RSA-204 site. Surface runoff is collected by shallow drainage ditches, and drainage is primarily toward the east. A shallow ephemeral drainage ditch located in the southeastern portion of the site drains the Building 7689 area. The entire site lies outside the 100-year floodplain.

- ***Geology.*** Site-specific drilling results indicate the bedrock surface ranges from an elevation of approximately 565 to 538 feet above mean sea level (amsl) and that a north-south-oriented bedrock topographic low exists within the eastern portion of the site (left panel, Figure 2-7). Variations in the depth to bedrock beneath the site are illustrated on the geologic cross sections (Figures 2-8, 2-9, 2-10, and 2-11). Overburden materials are mostly residual clay with chert formed from the weathering of the cherty limestone bedrock. The amount of residual material increases with depth, and a zone containing abundant residual chert fragments is immediately above the limestone bedrock.

- ***Groundwater Hydrogeology.*** RSA-204 is located within the boundaries of the larger RSA-146 groundwater unit (Figure 1-1). Groundwater flow within this portion of RSA-146 is to the north-northwest at a relatively low gradient. Groundwater beneath RSA-204 occurs in the unconsolidated overburden and the upper portion of the carbonate bedrock. The overburden and upper bedrock comprise a single interconnected aquifer. At depth, groundwater occurs under semiconfined conditions, flowing along discrete joints and bedding-plane partings. The water table across RSA-204 is generally flat, mimicking local topography. Figure 2-7 shows groundwater flow based on the groundwater elevation measured in April 2016. Groundwater flow direction is radial beneath RSA-204, with localized potentiometric surface highs occurring in the northern and southern portions of the site. Average depth to groundwater in overburden and interface wells in proximity to RSA-204 fluctuates seasonally, ranging from approximately 6.5 to 23 feet bgs. Average depth to groundwater in the areas of the planned excavations are summarized in Table 4-1. The groundwater elevations in overburden and interface monitoring wells ranged from 562.59 to 563.99 in April 2016. Four bedrock wells (204-RS2668, 204-RS2669, 204-RS2670, and 204-RS2671) were installed in the summer of 2014. Depth to water in these bedrock wells (measured in April 2016) ranged from 16.38 to 21.01 feet bgs.

The groundwater elevations in bedrock monitoring wells ranged from 562.7 to 563.84 feet amsl.

2.3.2 Summary of RSA-204 Fate and Transport Evaluation

Important components of the fate and transport evaluation include determining contaminant transport pathways and evaluating attenuation mechanisms. Key findings of both the surface media and groundwater site RFIs regarding pathway and attenuation mechanisms are summarized in Sections 2.3.2.1 and 2.3.2.2.

2.3.2.1 Leaching from Soil to Groundwater

The primary contaminant migration mechanism operating at the RSA-204 site is the leaching of site-related chemicals from soil to soil pore water (leachate) and subsequent transport to the water table as a result of the downward percolation of infiltrating rainfall. Perchlorate was detected in 6 surface soil samples and 145 vadose zone subsurface soil samples at concentrations above the RSA-specific DAF_4 SSL (0.0125 mg/kg) during the RFI. While no surface soil sample concentrations exceeded the leachate-based SSL of 1.7 mg/kg, 37 subsurface soil concentrations were above 1.7 mg/kg.

Based on the historical usage of ammonium perchlorate at RSA-204 and the wide distribution of elevated perchlorate concentrations in soil and groundwater, residual perchlorate in vadose zone soils (up to a depth of 16 feet bgs) is a likely source of groundwater contamination. Perchlorate was also detected at concentrations above its PSV in 37 of 60 definitive-level groundwater samples collected from 2008 to 2014 from multiple monitoring wells throughout the site.

Site Conditions – 2001 and 2002. The RFI evaluated two sets of soil analytical data from 17 soil borings for perchlorate. An initial set of data was collected in 2001 from seven soil borings sampled at one-foot intervals. This sampling event includes 5 surface and 223 subsurface soil perchlorate analyses. Of note is the occurrence of perchlorate in soil at shallow depths (less than 2 feet bgs) in certain borings, particularly borings K7691-SB01 and K7689-SB01. Several borings (K137-SB02 and K137-SB04, for example) show perchlorate concentrations increasing with depth. This is attributed to perchlorate leaching and transport from the upper to the lower reaches of the soil column.

Site Conditions – 2012. Three 2001/2002 locations (K7689-SB01/204-SB015, K7691-SB01/204-SB017, and K7688-SB02/204-SB023) were resampled during the 2012 RFI sampling. A comparison of the 2012 RFI soil results to the 2001/2002 perchlorate data indicates that leaching of perchlorate from the soil column is ongoing and has resulted in overall lower perchlorate soil concentrations. Perchlorate concentrations within the vadose zone between the two data sets are compared in the following table:

	Number of Vadose Zone Soil Samples	Mean Perchlorate Concentration (above average groundwater elevation)	Units
2001/2002 Samples	26	25.41	mg/kg
2012 Samples	9	0.167	mg/kg

Although there are slight differences in sample depth intervals between the data sets, the approximately 2 orders of magnitude reduction in the mean perchlorate concentration suggests leaching has been ongoing over the last 10 years. The reduction in soil perchlorate concentrations is expected given the high solubility and expected mobility of perchlorate in soil.

Therefore, the corrective measures will focus primarily on the 2012 and 2014 soil analytical data with the working assumption that leaching is ongoing at the site and continues to work to reduce overall vadose zone soil concentrations. The data came from areas with known contamination, and therefore provide no additional indication of the continued leaching of perchlorate. However, the 2014 data do indicate relatively high concentrations at the water table (16 to 18 feet bgs intervals), where maximum detected perchlorate concentrations were 1,560 mg/kg.

2.3.2.2 Advective Transport in Groundwater

While the general groundwater flow patterns through the karst aquifer at RSA-146 have been documented, specific flowpaths, especially for individual portions of different contaminants, are much more complicated.

Locally, lateral advective groundwater transport (i.e., transport of contaminants parallel to the groundwater flow direction) is occurring within overburden sediments beneath RSA-204. However, dye trace results indicate groundwater flow, and therefore contaminant migration, within the aquifer is not exclusively controlled by the hydraulic gradient. Groundwater flow through the system is less dependent on the localized hydraulic gradient than it is on other hydrodynamic forces (river stage, upgradient recharge, etc.). These forces pulse groundwater through the three-dimensional system of horizontally and vertically interconnected voids and conduits. Karst features diminish vertically as the bedrock changes from a more soluble limestone to a less soluble, chert-rich dolostone. Deeper groundwater flow (Lower Tuscumbia and upper and lower Fort Payne) is through solution-enhanced bedding plane features (stylolites) and subsurface fracturing and faulting. Some percentage of the groundwater within the karst aquifer is discharged to surface water bodies through springs and seepage faces.

Physical and biological processes work to attenuate dissolved-phase contamination as follows:

- ***Physical Attenuation Mechanisms.*** Over time, dilution and dispersion enlarge the lateral footprint of a contaminant plume, causing a net decrease in contaminant

concentrations at each location. Because of perchlorate's relatively high solubility, adsorption/desorption processes do not retard slow migration rates as the contaminant plume moves through the saturated medium. Physical attenuation depends on the velocity of water flow and rate of mixing.

- ***Biochemical Attenuation Mechanisms***. Biochemical or biologically enhanced chemical attenuation refers to a collective assemblage of enhanced reactions resulting in the attenuation of the released chemicals. Perchlorate can also be biodegraded under anaerobic conditions (nitrate-reducing conditions) and follows the pathway perchlorate/chlorate/chlorite/chloride.

As presented in the preceding text, leaching from soil to groundwater and physical and biochemical attenuation of dissolved-phase plume during advective flow are ongoing fate and transport considerations and are more fully evaluated in succeeding portions of Chapter 2.0.

Physical and Biochemical Attenuation. Over time, contaminant concentration and mass are reduced due to the combined effects of physical attenuation (adsorption, dilution, and volatilization) and biochemical attenuation (intrinsic biodegradation). Both attenuation mechanisms are working at RSA-204 to reduce the mass and concentration of the perchlorate and TCE in groundwater. Physical natural attenuation processes such as dilution and dispersion are the most significant reasons for reduced chemical concentrations; however, historical and current data from the site indicate that biodegradation of site-related chemicals is also occurring.

Physical Attenuation. The overall TCE and perchlorate groundwater plume geometries indicate the existence of a suspected historical surface release point (i.e., overlying the highest groundwater concentrations) and a halo of lower concentration areas consistent with the overall pattern of radial groundwater flow beneath the site. As expected, the TCE and perchlorate groundwater concentrations are being dispersed and diluted away from the suspected surface release point. The observed decreasing trends demonstrate that natural processes are leading to the reduction of contaminant concentrations, particularly in relation to the distance from the source areas.

Empirical evidence suggests the RSA-204 groundwater contamination may be connected via the network of karst features or mapped fault traces to the springs northwest of the site. Springs RSA-1802 and RSA-1802a have historically contained TCE (maximum detected concentration (MDC) of 5.7 µg/L) and perchlorate (240 µg/L). One potential source of this contamination is the RSA-204 groundwater plume, although the RSA-206 site, immediately to the north of RSA-204, may also be contributing to the TCE/perchlorate in the springs.

Biodegradation. Biodegradation is a biochemical process mediated by microorganisms living in the immediate environment with the contaminant. Biodegradation can occur in water or soil under aerobic or anaerobic conditions. Biodegradation is one of the few processes working in the aquifer that can transform a toxic substance (i.e., a groundwater contaminant) into a less harmful or innocuous product of an organism's metabolism. Most chlorinated solvents exhibit relatively low rates of biotic degradation and sometimes persist in the subsurface for extended periods of time.

Perchlorate can also be biodegraded under anaerobic conditions. Optimal conditions for perchlorate biodegradation include anaerobic or microaerophilic conditions (i.e., less than 1 milligram per liter [mg/L] dissolved oxygen [DO]), a reducing environment with a negative oxidation-reduction potential (ORP), pH between 5 and 8, nitrate concentrations less than 5 mg/L, and total organic carbon (TOC) concentrations greater than 2 mg/L. Elevated nitrate concentrations may be a competitive inhibitor for perchlorate degradation; however, studies to date have shown that there is no one concentration of nitrate below which perchlorate reduction is optimal (Tan et al., 2004). Only 2 of 30 groundwater samples collected in 2014 contained nitrate (5.84 and 10.4 mg/L), suggesting that overall nitrate concentrations in site groundwater do not exceed the threshold level (5 mg/L), but this level is exceeded locally within the aquifer. These sporadic, elevated nitrate occurrences should not be inhibitive to perchlorate biodegradation.

2.4 Site Risk Summary

An ARBCA evaluation for human health and a SLERA were performed for RSA-204 as part of the RFI (Shaw, 2013a). These evaluations are summarized in Sections 2.4.1 through 2.4.3. The complete ARBCA evaluation for human health and the ecological risk evaluation are provided in the RFI report (Shaw, 2013a).

2.4.1 Land and Resources Use

The land use zone at RSA-204 is categorized as industrial. RSA-204 is located west of the main area of the former Thiokol North Plant area. The North Plant lies in the southeastern portion of RSA. RSA-204 is located south of Eagle Road, between Magazine and Falcon Roads, and consists of maintained lawns, clumps of trees, berms, buildings, steam lines, and paved areas. The site includes existing Buildings 7687, 7688, 7689, 7690, and 7691, which are currently used for inert storage or live explosive work. Although the current use of RSA-204 is not residential, nor is it expected to be in the future, the ARBCA human health evaluation assesses risks from residential site use, which is useful in determining whether there is a benefit to incrementally increasing the scope of remediation to include cleanup to residential standards so as to attain unrestricted land reuse for RSA-204 without LUCs.

There is no current potable use of groundwater at RSA-204. An installation-wide interim record of decision (IROD) was instituted to prevent potable use and provide management control over nonpotable uses of all groundwater beneath RSA. The IROD for installation-wide groundwater (Shaw, 2007) was approved by EPA Region 4 and ADEM in September 2007. Monitoring of the environmental use restrictions (EUR) and controls specified in the groundwater LUC remedial design (Shaw, 2009a) has been conducted annually by the Army. These annual reports have shown that the LUCs have been effective in controlling and preventing use or exposure to groundwater at RSA, including RSA-204.

2.4.2 ARBCA Human Health Evaluation

A human health risk assessment for RSA-204 was prepared and included in the RFI report (Shaw, 2013a). It should be noted that risk assessments are required for Army cleanup sites as per the National Oil and Hazardous Substances Pollution Contingency Plan (NCP) and Defense Environmental Restoration Program (DERP) guidance (EPA, 1990; DoD, 2012). In accordance with the DoD's DERP Manual (Enclosure 3, Section 4.b.[5][a]3.b), a "DoD component does not have to assume that the reasonably anticipated future land use is residential." However, at RSA, the residential scenario is included in the risk assessment in order to determine if a site is eligible for unrestricted use as defined in Alabama Administrative Code (AAC) 335-5-1-.03(r). In the Permit, issued under the Alabama Hazardous Wastes Management and Minimization Act, ADEM has specified that investigations must comply with AEIRG (ADEM, 2005) and ARBCA guidance (ADEM, 2008). Therefore, in order to determine if this site is eligible for unrestricted use, risks to a residential site user receptor have been assessed.

A preliminary screening level (PSL) evaluation, which is the first tier of the ARBCA process (ADEM, 2008), was completed for both soil and groundwater at RSA-204. The Risk Management (RM) 2 cumulative risk assessment (the third tier in the ARBCA process) was also conducted for soil and groundwater. The RFI also considered the potential for vapor intrusion if buildings were constructed and occupied in the future. The results of the PSL and RM-2 evaluations are described in the following sections and summarized in the following table:

Receptors	Soil	Groundwater (potable use)
Current		
Groundskeeper	✓	PI
Construction Worker	✓	PI
Trespassers	✓	PI

Receptors	Soil	Groundwater (potable use)
Future		
Groundskeeper	✓	X
Construction Worker	✓	X
Trespassers	✓	PI
Sportsmen	✓	PI
Hypothetical Resident -Lifetime	✓	X
Hypothetical Resident –Child	X	X

Notes:

✓ Evaluated and hazard/risk found to be acceptable.

X Evaluated and hazard/risk found to be unacceptable.

PI – Pathway is incomplete.

2.4.2.1 PSL Evaluation

The PSL evaluation consists of a comparison of the representative concentration (RC) of the site-related chemicals of potential concern (COPC) in the relevant media to their PSVs to identify COCs. Inorganic COPCs are identified by comparison of site concentrations to background screening values (BSV). In addition, for some inorganics, additional statistical tests and geochemical evaluation were conducted to further refine their background status. COPCs with RCs that exceed their PSVs are identified as COCs and may be carried forward to the next tier of the ARBCA evaluation. Residential PSVs were selected for the RSA-204 evaluation in order to consider alternatives to attain unrestricted land use. For RSA-204, COPCs were identified separately for surface soil, shallow subsurface soil, and deeper subsurface soil. All chemicals identified as COPCs in any of the three soil sampling intervals were included as COPCs in total soil (a hypothetical medium including all soil depths to the shallower of bedrock or the water table). Groundwater was also evaluated as a potential source of potable water.

The COCs identified in total soil were limited to chromium in surface soil and perchlorate in subsurface soil. Chemicals in groundwater identified as COCs because their MDCs exceed their PSVs were perchlorate, six explosive compounds (1,3-dinitrobenzene, 2,6-dinitrotoluene, 2-nitrotoluene, 3-nitrotoluene, nitrobenzene, and RDX), and one VOC (TCE). Seven additional VOCs (carbon tetrachloride, chloroform, cis-1,2-dichloroethene, ethylbenzene, tetrachloroethene, toluene, and total xylenes) were identified as COCs only because they have maximum contaminant levels (MCL). These COCs were taken to the third tier (RM-2) of the ARBCA assessment for further evaluation. None of these seven additional COCs were carried further into the risk evaluation because MDCs did not exceed MCLs.

2.4.2.2 RM-2 Cumulative Risk Evaluation

The COCs identified in the PSL evaluation were evaluated in the cumulative risk assessment. A commercial worker and construction worker were included as plausible receptors. A residential receptor was also included as a hypothetical future receptor to consider the need for LUCs or remediation to attain unrestricted land use. Groundwater was evaluated as if it were developed as a source of potable water in the future, and the MDC was used as the groundwater representative concentration.

The ARBCA guidance considers an individual excess lifetime cancer risk (IELCR) of 1E-05 to be the target cumulative risk. The target noncancer hazard is a hazard index (HI) of 1.0. Estimated cumulative risks/hazards at or below these targets do not require additional action.

The cumulative IELCR and noncancer HI estimates for each receptor are summarized in Table 2-1. These totals are based on the contributions from all the COCs carried forward from the PSL evaluation. Table 2-1 shows that for soil exposure at RSA-204, neither the cumulative IELCR nor the HI were above ADEM limits for any receptor. When exposure to groundwater is included in the estimates, the cumulative IELCR exceeded the ADEM cumulative risk trigger level of 1E-5 for all receptors. Similarly, the cumulative HI exceeded the threshold level of 1.0 for all receptors (Table 2-1).

Table 2-2 summarizes the RM-2 evaluation of human health and identifies COCs that contribute significantly to cumulative risk (IELCR of 1×10^{-6} or greater). Relevant COCs in groundwater for the hypothetical resident are perchlorate, 2,6-dinitrotoluene, 2-nitrotoluene, RDX, and TCE.

2.4.2.3 Other Relevant Exposure Pathways

The objective of the screening-level evaluation of vapor intrusion was to determine whether there has been a release of VOCs to groundwater or soil at RSA-204 that could volatilize and migrate upward to pose an unacceptable risk to occupants of commercial/industrial buildings or a hypothetical residential building.

A draft screening-level vapor intrusion evaluation of nine other surface media sites within groundwater site RSA-146 was performed by CB&I (2015a). Using soil gas, soil, and groundwater data, it was concluded that these surface media sites did not represent a concern for vapor intrusion. Therefore, it was assumed the concentrations of VOCs in soil and groundwater at these nine surface media sites would pose no unacceptable risk via vapor intrusion.

In the RFI (Shaw, 2013a), maximum chemical concentrations in soil and groundwater at RSA-204 were compared with those in the draft screening-level vapor intrusion evaluation to determine whether there would be a potential impact on indoor air quality. Based on this

comparison, it was concluded that VOCs in soil do not represent a source that would pose an unacceptable health threat by the vapor intrusion pathway.

VOC concentrations in groundwater were also compared with updated EPA (2002) screening levels associated with an IELCR of 1 x 10^{-6} or an HI of 1. VOCs detected in groundwater did not exceed their target screening concentrations, with the exception of TCE. As a result, the potential for TCE vapor intrusion was estimated using EPA (2002) Tier 3 modeling of indoor air concentrations. The estimated indoor air concentration of TCE exceeded its target screening level based on a cancer risk of 1E-5 and a hazard quotient (HQ) of 1. However, the MDC of TCE in RSA-204 groundwater is orders of magnitude below concentrations in groundwater unit RSA-146, which were shown on the basis of measured soil gas concentrations not to pose an unacceptable health threat. Therefore, the RFI (Shaw, 2013a) concluded that VOCs released to RSA-204 soil and groundwater do not pose an unacceptable health threat by the vapor intrusion pathway.

2.4.3 Screening-Level Ecological Risk Assessment

A SLERA was completed for RSA-204 as part of the RFI (Shaw, 2013a). As discussed in Section 2.4.2, risk assessments are required for Army cleanup sites as per the NCP and DERP guidance (NCP Subpart 300.430[d][4] [EPA, 1990]; DoD [2012], Enclosure 3, Section 4.b.[5][a]3.a). Although SLERAs may have limited use for very small sites because population-level effects are very unlikely when only a small area is potentially impacted, ADEM and the Army have agreed that results from SLERAs will be considered in the risk management process for site disposition. Further, SLERAs will be performed following procedures specified in the ADEM-approved final SLERA supplements to the installation-wide work plan (Shaw, 2010a). Since ADEM has concurred with the SLERA supplements to the installation-wide work plan (Shaw, 2010a), a SLERA was completed for RSA-204 in accordance with these procedures.

The surface soil data for RSA-204 were compared to their respective BSVs and ecological screening values (ESV). A weight-of-evidence (WOE) evaluation was completed to further evaluate the constituents identified in the initial screening. The WOE evaluation examined a number of lines of evidence in order to draw conclusions as to whether site-related constituents at RSA-204 have the potential to pose hazards to ecological receptors.

The initial comparison of the detected constituent concentrations in surface soil to ESVs and BSVs identified 13 metals that exceeded their respective ESVs and/or BSVs and required further evaluation. In addition, perchlorate, 2-nitrotoluene, and HMX were evaluated further because they were detected in surface soil but lacked BSVs and ESVs. The WOE evaluation concluded

that chromium, copper, and selenium required further evaluation in a community-level assessment and a food chain assessment.

The community-level and food chain assessment HQs for copper were all less than 1, indicating that further evaluation of copper in surface soil at RSA-204 is not warranted. The results for both selenium and chromium indicated that there is the potential for hazards to sensitive individuals with small home ranges in the immediate vicinity of the sample exhibiting the MDC; however, risks to terrestrial food chain receptor populations as a whole are unlikely. The mean site concentrations for RSA-204 are below the BSV, which indicates the potential impacts are lower than those expected for areas with naturally occurring background site concentrations. In the case of selenium, the concentrations exceeding the BSV were from samples collected in 1997. More recent samples have not exhibited selenium and were thought to be representative of site conditions. In addition, there is no known site-related source of selenium at RSA-204.

The results of the SLERA indicated that COPECs in surface soil at RSA-204 were unlikely to pose hazards to ecological receptors and further evaluation was not warranted.

2.5 Final Conceptual Site Model

A CSM was developed within the RFI to guide the investigation at RSA-204. The CSM was developed based on process knowledge, site inspections, and evaluation of existing soils and groundwater data. The results of the RFI have been integrated into a pair of figures; Figure 2-12 which presents a schematic representation of the most likely perchlorate release points at the site and Figure 2-13, which is the final CSM from the RFI. The final CSM includes a list of potential contaminant sources, migration pathways, investigated media, impacted media, COCs, and potential human and ecological receptors.

The primary sources of contamination investigated at RSA-204 were related to potential spills and overflow from perchlorate and explosive storage, drying, transferring, grinding, and processing activities at Buildings 7687, 7688, 7689, 7690, and 7691 and their associated drains, sumps, and storage areas.

Specifically, the southeastern area of perchlorate contamination appears to have originated from leaks or releases from the captive sump northeast of Building 7689 (Figure 2-12). As shown on Figure 2-12 wastewater lines draining the buildings at the site converge at or near the central area. Leaks or releases from the septic drain field and the abandoned wastewater lines draining into the septic field are the likely source of perchlorate contamination in the central area.

As illustrated on Figure 2-13, potential receptors could be exposed to contaminated soil, soil vapor, and groundwater. Current human receptors are limited to groundskeepers who maintain

the mowed grass, construction workers, and trespassers. Future potential receptors include all current receptors plus a potential sportsman and, under a land reuse scenario, hypothetical child and adult residents.

2.6 Summary

The results of the RFI indicated that site-related releases of perchlorate, VOCs, and explosives likely occurred during operation of the facilities in RSA-204. TCE was detected in groundwater at concentration exceeding its PSV, however, TCE was not detected above its PSV or leaching-based criteria in surface or subsurface soil. Therefore, TCE concentrations in soil are not acting as a continuing source to groundwater. TCE was determined to be a COC in groundwater.

Perchlorate concentrations in soil at the site are likely acting as a continuing source to groundwater. Thirty-seven subsurface soil sample locations contain perchlorate at concentrations that exceed the leachate-based SSL of 1.7 mg/kg. Groundwater is also impacted with perchlorate concentrations that exceed its PSV; perchlorate is a COC in groundwater. The elevated perchlorate concentrations in soil at RSA-204 require corrective measures to eliminate the continuing source to groundwater.

Although explosives were detected in groundwater at concentrations exceeding the PSVs, no explosives were detected in soil at concentrations exceeding the PSVs. 2-Nitrotoluene in one soil sample and RDX in two soil samples were detected at concentrations above the DAF_4 SSLs. However, the RFI concluded that due to the low frequency of detections in soil and the low frequency and magnitude of detections in groundwater, explosives in soil are not acting as a continuing source of groundwater contamination. 2-Nitrotoluene, 2,6-dinitrotoluene, and RDX are COCs in groundwater.

Due to the isolated nature of RSA-204 from other environmental sites and contaminant plumes, the corrective measures for both soil and groundwater are being addressed by RSA-204.

Corrective measures are necessary at RSA-204 to address the following:

SWMU	COCs in Vadose Zone Soil Requiring Action	COCs in Groundwater Requiring Action	SWMU Responsible for Groundwater Corrective Action
RSA-204	Failing industrial risk: None	Perchlorate, TCE, 2-Nitrotoluene, 2,6-Dinitrotoluene, RDX	RSA-204
	Failing residential risk: None		
	Exhibiting a leaching concern to groundwater: Perchlorate		
	Exhibiting a potential soil vapor concern: None		

3.0 Decision Summary

The RFI report for RSA-204 (Shaw, 2013a) concluded that the Army's historical operations at RSA-204 have resulted in releases of hazardous substances (perchlorate, TCE, and explosive compounds) to groundwater that pose an unacceptable threat to human health if, in the future, groundwater supplies are developed at that site and the groundwater is used as a potable water source. In addition, perchlorate in site soils is contributing to further groundwater contamination through leaching. Concentrations of TCE and explosives in soil are not above screening criteria and are not potential leaching threats to groundwater. This chapter identifies the CMOs based on the results of the RFI, and provides CGs that can be used in evaluating alternatives that rely on reduction in concentrations to achieve the CMOs.

3.1 Basis for the Action

A fate and transport evaluation, an ARBCA evaluation for human health, and a SLERA were performed for RSA-204 as part of the RFI (Shaw, 2013a). The RFI concluded that perchlorate in soil poses an ongoing sourcing threat to groundwater from the soil-to-groundwater migration pathway and that future potable use of groundwater beneath RSA-204 would potentially pose an unacceptable threat to human health. While there is no current potable use of groundwater at RSA-204 and such use is controlled by the installation-wide groundwater IROD (Shaw, 2007), future potable use of groundwater must be considered in the ARBCA process to ensure protectiveness of the remedy and to promote resource conservation (ADEM, 2008).

The RFI also concluded that corrective measures for soil are needed at this site, because although representative site concentrations do not yield risk estimates that exceed the acceptable cumulative risk levels, perchlorate concentrations in soil will continue to be a leaching threat to groundwater. Therefore, the soil cleanup action at RSA-204 is not driven by unacceptable human health exposure risk but by the need to protect groundwater from continued leaching of perchlorate in soil to groundwater. Perchlorate, TCE, and explosives in groundwater pose an unacceptable health threat if groundwater is ever used for potable purposes. Corrective measures are therefore needed to address both soil and groundwater at RSA-204.

3.1.1 Identification of the Corrective Measure Objectives and Cleanup Goals

This section presents the CMOs and CGs for RSA-204.

3.1.1.1 Corrective Measure Objectives

The CMOs for RSA-204 are as follows:

- Clean up affected groundwater to concentrations determined to be within acceptable levels for human exposure.
- Reduce perchlorate concentrations in soil at RSA-204 to minimize the potential for perchlorate contamination in site soils to act as a continuing source of groundwater contamination.

3.1.1.2 Corrective Measure Cleanup Goals

Corrective measure CGs are established to protect human health and the environment while also meeting applicable regulations for alternatives that rely on concentration reduction. The identification of CGs must consider the environmental issues at the site and the receptors that are affected. The following primary environmental issues at RSA-204 were identified during the RFI:

- An unacceptable risk or hazard to the industrial and hypothetical future user of groundwater for potable purposes from contamination by TCE, three explosive compounds, and perchlorate.
- Perchlorate contamination in soil, which has been and will, if unabated, continue to be a source to groundwater.

3.2 Applicable Regulations

Corrective measures and CGs are developed based on consideration of applicable laws and regulations, as well as consideration of concentrations that will achieve an acceptable risk/hazard. The CGs will comply with applicable laws and regulations and be set such that an acceptable risk/hazard would be achieved. The following laws and regulations are relevant to RSA-204 groundwater and its potential for potable use are:

- Safe Drinking Water Act of 1974 non-zero MCL goals and MCLs (40 Code of Federal Regulations Parts 141 and 143).
- Alabama MCLs (AAC 335-7-2).
- Federal MCLs have generally been adopted by Alabama and have been adopted as CGs for groundwater for chemicals with MCLs.

Other laws and regulations may affect alternative evaluation and selection. Table 3-1 lists relevant guidance and regulations pertinent to the RSA-204 corrective measures.

3.3 Selected Corrective Measure Cleanup Goals

As described in the previous sections, for COCs with MCLs or other regulatory values, these values are selected as the groundwater CGs. For chemicals that lack MCLs or other regulatory values, CGs have been selected such that cumulative risk values of 1.0E-5 or HI values of 1.0 for relevant target organs will not be exceeded. Table 3-2 summarizes the CGs for RSA-204.

Perchlorate in Soil and Groundwater. The CG selected for perchlorate in groundwater at RSA-204 is the EPA Interim Drinking Water Health Advisory level (HAL) of 15 µg/L. This HAL was established as the approved Army groundwater CG for perchlorate in a memorandum from the U.S. Department of Defense in 2009. Using this HAL, the Army derived a CG for perchlorate in soils at RSA of 1.7 mg/kg in the *Final Installation-Wide Groundwater Cleanup Strategy* (Shaw, 2009b). This value will be used at RSA-204 as the CG for perchlorate in soil. This cleanup value is based on the conservative assumption that exposure would occur immediately under the source.

It should be noted that perchlorate contamination in subsurface soil exists adjacent to Building 7689, on the east side. This building actively supports the Army's mission and is not scheduled for demolition in the foreseeable future. Alternatives were evaluated for this contamination because the building cannot practically be removed and excavation or treatment cannot be conducted immediately adjacent to the building because of concerns regarding its safety and stability.

TCE in Groundwater. The MCL for TCE (5 µg/L) will be the CG for groundwater at RSA-204. Based on information provided in the RFI report for RSA-204 (Shaw, 2013a), the cancer risk posed by TCE at the MCL is 4.3E-6.

Explosives in Groundwater. The explosives 2-nitrotoluene, 2,6-dinitrotoluene, and RDX are carcinogens. The CGs for 2-nitrotoluene, 2,6-dinitrotoluene, and RDX were developed using information in Table D-22 of Appendix D of the RFI report (Shaw, 2013a) to ensure that cumulative risks from exposure to groundwater do not exceed 1.0E-5.

3.4 Scope and Role of Response Action

The environmental concerns at RSA are extremely complex. Work at over 300 sites in the Installation Restoration Program at RSA is underway. To ensure protection from exposure to potentially contaminated groundwater under these sites and elsewhere on RSA, a groundwater IROD has been approved for installation-wide groundwater LUCs (Shaw, 2007; 2009a). This IROD selected LUCs for groundwater as the interim remedy. LUCs have been implemented to prevent potable use of groundwater and to manage nonpotable uses such that exposure to

contaminated groundwater is minimized (Shaw, 2009a). This interim remedy will remain in place for the groundwater under RSA-204 until final corrective measures have been selected in a statement of basis/decision document for the RSA-146 groundwater unit. In addition, an Army-regulated site access control (SAC) program is currently in place to control access to the RCRA sites at RSA. This program prevents inadvertent exposure to contamination in the interim until required remediation is accomplished (Army, 2012). Via the SAC program, the installation of wells for drinking water is prevented, and all requests for the installation of wells for industrial processes or agricultural purposes on RSA are subject to Army review and approval. This program prevents the use of groundwater as a source of drinking water and allows nonpotable uses of groundwater to be managed.

3.4.1 Overall Remedial Strategy for Redstone Arsenal

The overall strategy for cleanup at RSA has been presented to the regulators in two cleanup strategy documents, the *Installation-Wide Groundwater Cleanup Strategy* (Shaw, 2009b) and the *Installation-Wide Strategy for Cleanup of Impacted Wetlands* (Shaw, 2010b). The overall RSA cleanup strategy includes the following elements:

- Expedite evaluation and release of surface media sites to allow for efficient, mission-related property reuse.
- Expedite cleanup of source areas at surface media sites and secondary sources of ongoing groundwater contamination, including dense nonaqueous-phase liquid.
- Prevent exposures to surface media and groundwater that may result in unacceptable risks through the use of the Army's SAC program and from implementation of the groundwater LUCs selected in RSA's groundwater IROD.
- Coordinate the evaluation of groundwater sites and their associated surface sites so that approval of groundwater RFIs is not delayed by unresolved surface media site issues.
- Design and implement an installation-wide monitoring network to monitor corrective measures progress and ensure that the selected remedies are protective of human health and the environment on a long-term basis.

The corrective measures for RSA-204 are consistent with this strategy. The corrective measures will provide protection of human and ecological receptors and permanent reduction of the continued sourcing from soil to groundwater from perchlorate-contaminated soils at RSA-204. The corrective measures will also support the Army and the federal government overall in reducing future short-term and long-term financial liabilities associated with managing this site and the underlying groundwater unit, RSA-146. In addition, this removal is anticipated to result

in reduced future remedial costs associated with this site and the underlying groundwater unit, RSA-146.

3.4.2 Scope of Problems Addressed by RSA-204 Corrective Measures

The action or scope covered by the corrective measures at RSA-204 is twofold:

- Address soil that serves as a potential source of soil to groundwater contamination
- Treat contaminated groundwater that represents an unacceptable risk or hazard to the industrial and hypothetical future user of groundwater for potable purposes from contamination by perchlorate, TCE, and three explosive compounds.

Due to restricted access to some areas of perchlorate-contaminated soil, the proposed corrective measures will not result in no-further-action status for RSA-204. Residual perchlorate contamination exceeding the groundwater protectiveness CG will be left adjacent to the building and capped.

3.5 Extent of Contaminated Soil

Documented perchlorate usage within the site has led to the release of perchlorate to soil and groundwater northeast of Building 7691 (central portion of the site) and east of Building 7689 (southeastern portion of the site). The extent of perchlorate contamination is illustrated on Figures 2-2 through 2-5. No PSV or leachate-based SSL exceedances were reported in surface soil samples collected within the RSA-204 site boundary. However, the RFI reported that vadose zone PSV and leachate-based SSL exceedances (maximum of 57 mg/kg perchlorate) extend to the average depth of groundwater in both areas. Perchlorate exceedances are delineated within the subsurface soils. The area is underlain by dissolved perchlorate groundwater plumes that have a “hot spot” (concentrations exceeding 10,000 µg/L) associated with each release area.

3.6 Extent of Contaminated Groundwater

An isoconcentration map of perchlorate in groundwater (a composite of the overburden, interface, and shallow bedrock zones) using the summer 2014 perchlorate analytical results is presented on Figure 2-6. Maximum perchlorate concentrations from both sampling events were reported from well K142-RS1224 (100,000 µg/L in 2012 and 98,300 µg/L in 2014), which is located adjacent to the sump northeast of Building 7689. Bedrock perchlorate concentrations range from 2.58 µg/L in downgradient well 204-RS2668 to 2,710 µg/L in well 204-RS2670. The vertical extent of perchlorate exceedances beneath the sump northeast of Building 7689 was delineated by bedrock well 204-RS2671 (4.11 µg/L), which is located adjacent to K142-RS1224.

The most recent groundwater analytical data indicate that TCE exceeds the CG (5 µg/L) in only one well, 204-RS2683, at a concentration of 11.3 µg/L. Explosives exceedances in groundwater

(Figure 2-6) are scattered across the site and do not appear to be collocated with the perchlorate or TCE exceedances. Only three exposure compounds (RDX, 2-nitrotoluene, and 2,6-dinitrotoluene) exceed their CGs at up to four locations (204-RS2033, 204-RS1550, K142-RS1223, and K-RS690).

3.7 Corrective Measures Evaluation and Selection

The following information summarizes the analysis of technologies and alternatives and selection of the corrective measures for this site in the Corrective Measures Study report (CB&I, 2016).

3.7.1 Summary of the Corrective Measures Alternatives Evaluation

Only groundwater technologies that could treat TCE, explosives, and perchlorate were considered during the evaluation. The following soil and groundwater technologies were considered and were retained during this evaluation as stand-alone technologies or components of the corrective measures:

- No action
- LUCs
- Soil excavation and off-site disposal
- Soil excavation and on-site ex situ bioremediation
- Capping
- In situ soil mixing
- Monitored natural attenuation (MNA)
- In situ enhanced bioremediation (ISEB).

Following the initial evaluation, four final corrective measures alternatives for the treatment of contaminated soils and groundwater at RSA-204 were evaluated:

- Alternative 1 – No Action

- Alternative 2 – Soil Excavation, Localized Cap (Building 7689 Area), Groundwater ISEB via Passive Infiltration, Groundwater MNA, and LUCs

- Alternative 3 – In Situ Soil Mixing, Localized Cap (Building 7689 Area), Groundwater ISEB via Soil Mixing, Groundwater MNA, and LUCs

- Alternative 4 – Groundwater ISEB via Injection, Soil Excavation, Localized Cap (Building 7689 Area), Groundwater MNA, and LUCs.

The present value cost for the selected corrective measures is $4,251,200.

3.7.2 Selected Corrective Measures - Groundwater ISEB via Injection, Soil Excavation, Localized Cap (Building 7689 Area), Groundwater MNA, and LUCs

The Army concluded that Alternative 4 – Groundwater ISEB via injection, soil excavation, localized cap (Building 7689 Area), groundwater MNA, and LUCs, most appropriately addresses the contaminated soil and groundwater at RSA-204. This alternative would permanently reduce the volume of perchlorate-contaminated soil at the site and treat the contaminants in groundwater under the site. This alternative would also achieve the CMOs for the site and meets the CGs.

3.8 Request for Permit Modification

The RFI report for RSA-204 (Shaw, 2013a) was approved by ADEM on March 4, 2014. A copy of the ADEM approval letter for the RFI report is included in Appendix B. The request for permit modification (Appendix B) accompanies this CMI work plan for RSA-204 and presents the supporting information, including all procedures necessary to implement and monitor the final corrective measures for the site in accordance with AAC R.335-14-8-.04 (2). The inclusion of this request for permit modification meets requirements specified in Section VI.E.3 of the Permit.

4.0 Corrective Measures Implementation

This chapter provides an overview of the field activities planned to complete groundwater and soil corrective measures at RSA-204. Work discussed in this chapter will be completed in accordance with the procedures outlined in this CMI work plan and other approved documentation as appropriate.

4.1 General Scope

The general scope of work for RSA-204 activities is expected to include the following:

- Mobilization/demobilization
- Utility clearance and marking
- Vegetation clearing
- Interface monitoring well installation (204-RS2824)
- Baseline groundwater sampling
- Well closure (4 wells)
- Removal of blast berms (north side of Building 7689 and along western side of Building 7688)
- Surveying and marking the proposed injection locations, excavation areas, and localized cap (Building 7689)
- ISEB treatment via well points and direct-push technology (DPT) injections
- Construction of surface water and erosion controls
- Excavation of contaminated soil, sump near Building 7689, and septic tank
- Confirmation sampling and analysis of the excavated areas
- Waste characterization sampling
- Transport and disposal of excavated soils as special waste (nonhazardous) at a Subtitle D landfill
- Backfilling of excavation areas using clean borrow soil
- Construction of impermeable concrete cap adjacent to Building 7689

- Site restoration including application of topsoil, revegetation with approved grass mixtures, replacement of asphalt driveways and roads (as necessary), and replacement of berms and monitoring wells
- Monitored natural attenuation and long-term monitoring (groundwater sampling and reporting).

The general schedule for implementation of corrective measures at RSA-204 is provided in Appendix C. The schedule is approximate. The dates of actual implementation will depend on document review time, coordination with other sites, and field conditions encountered during implementation.

Communication and coordination during the CMI will follow the RSA Program Management Contract program management plan and RSA's community involvement plan (CB&I, 2015b). As per the RCRA permitting process, public involvement will occur during permit modification.

4.1.1 Procurement and Subcontracting

Subcontracted services and materials required for the completion of the project may include the following:

- Utility and steam line relocation
- Well closure
- Drilling, including replacement wells (204-RS2791 through 204-RS2794) and new interface well (204-RS2824)
- Well development
- Groundwater sampling
- DPT ISEB injections
- Vegetation clearing and berm removal and reconstruction
- Sump and septic tank removal
- Analytical laboratory services
- Waste transportation and disposal
- Surveying
- Common fill
- Structural fill

- Topsoil
- Aggregate - crusher-run, riprap, drainage stone
- Storm water erosion and sediment controls
- Emulsified vegetable oil (EVO) (substrate), diammonium phosphate (DAP), and yeast extract or an equivalent supplemental nutrient source
- Geosynthetic clay liner
- Asphalt and concrete repair
- Seed, fertilizer, and mulch
- Heavy-duty plastic sheeting.

The following is a general list of equipment that may be utilized by subcontractors to complete field remediation activities:

- Excavator to excavate contaminated soil
- Front-end loader to consolidate soil and move fill material
- Track dozer to move, place, and prepare fill material
- Steel-wheeled compactor for compaction of fill material
- Large-capacity water truck (or equivalent) for site dust control and hydration of import material for compaction
- Portable fuel tank (mounted on pickup truck)
- Storage tanks for ISEB treatment, with hose and plumbing connections
- Direct-push/hollow-stem auger drill rig
- Injection pump.

Support equipment and materials will be procured through equipment vendors and scientific supply vendors and shipped directly to the site. Support equipment includes portable storage, radios, relief stations, eyewash stations, sampling supplies and equipment, health and safety supplies and equipment (e.g., personal protective equipment and air monitoring equipment [e.g., dust monitor and photoionization detector]), and other miscellaneous supplies (e.g., wooden stake, pin flags, and construction fencing materials). The copiers and fax machine at Building 7471 will also be used to support the work at RSA-204.

4.1.2 Field Personnel

The following field personnel will likely be utilized to complete field remediation activities:

- Personnel
  - One site supervisor
  - One site safety officer
  - One project business administrator
  - One field quality control site manager
  - Two to three equipment operators
  - Two laborers.

Drilling, surveying, and DPT injections will be subcontracted. The number and schedule of personnel will be adjusted during the project as required for completion.

4.2 Preliminary Activities

Preliminary activities include mobilization, requirements for base access, digging permits and utility marking, surveying, well installation (204-RS2824), and protection of existing site features. All field personnel will follow this work plan and abide by the health and safety requirements presented in the SSHP (Appendix D).

4.2.1 Mobilization

Mobilization activities will include the deployment of personnel, equipment, subcontractors, and materials necessary to commence CMI activities at RSA-204. After field mobilization, a preconstruction meeting and safety orientation will be held to review the proposed approach and the sequencing of work to ensure that clear lines of communication are established. All necessary site-specific safety training will be conducted at this time.

4.2.2 Access to Redstone Arsenal

Badge requests for access to RSA should be submitted two weeks ahead of the date needed to allow for approval and processing by the RSA host organization. New CB&I personnel and subcontractor personnel will register at the RSA Visitor's Center at Gate 9. Personnel with prior approval from a host RSA organization will be issued personnel badges upon presentation of proper identification. Temporary passes may be required for some vehicles. For further information, contact the Redstone Arsenal Visitors Center located at Gate 9 at (256) 876-1122 or the Vehicle Registration Office at (256) 876-5770. Registered personnel may access RSA-204 via any of six active gates but should note that gate access hours vary. Commercial trucks must pass through the inspection facilities at either Gate 1 or Gate 9 each time they enter RSA.

Digging Permit and Utility Marking. In advance of any intrusive fieldwork, a job order request that describes the proposed activities will be submitted. This information is provided to

RSA through a system that affords various RSA entities the opportunity to review the proposed activities and verify that impacts to RSA resources (e.g., natural, cultural, etc.) are properly managed.

Prior to conducting any intrusive site activities, a digging permit will be requested from the RSA Directorate of Public Works. As part this of permit, RSA will locate and mark underground utilities in the vicinity of the proposed injection points and excavation areas at RSA-204. The procedure requires notification by telephone ([256] 876-9881) within 14 days of intrusive activities.

The digging permit must be renewed every 30 days. To avoid temporary shutdown, a request for permit extension will be made at least 1½ weeks prior to expiration. The proposed ISEB injection locations and excavation areas are shown on Figures 4-1 and 4-2, respectively.

4.2.3 Site Control

CB&I will use the existing fence, temporary construction fencing materials, barricades, and warning tape, as necessary, to delineate the site exclusion zone, contamination reduction zone, and site support zone in compliance with the SSHP (Appendix D). Warning signs will be posted at conspicuous locations around the perimeter of the construction areas to discourage unauthorized entry. The sign spacing will be approximately 50 feet. An equipment storage and material laydown area will be designated during mobilization.

4.2.4 Storm Water Erosion and Sediment Controls

Storm water management and erosion and sediment control will be provided according to the *Alabama Handbook for Erosion Control, Sediment Control and Stormwater Management on Construction Sites and Urban Areas* (Alabama Soil and Water Conservation Committee [ASWCC], 2009) (Appendix G).

BMPs will be used to minimize erosion and sedimentation and prevent pollution of water and land at the site. Approximate locations of BMPs are included on Figure 4-2. Installation of temporary controls will be coordinated to maintain effective and continuous control of erosion and pollution. The primary erosion control techniques used will be silt fencing and hay bales. Erosion control devices will be inspected weekly and also within 72 hours of any qualifying precipitation event (any precipitation of 0.75 inch or greater in any 24-hour period). Sediment deposits will be manually removed from the silt fence after each qualifying rainfall event or when sediment reaches one-half of the barrier height. Removed sediment will be added to the contaminated soil for subsequent disposal. Damaged erosion control devices and damaged areas

around and beneath the devices will immediately be repaired. Upon completion of the project, erosion and sedimentation control devices will be removed.

4.2.5 Vegetation Clearing

As necessary, CB&I will clear brush and vegetation currently covering the injection and excavation areas at RSA-204 in preparation for the groundwater treatment and soil removal action. Vegetation (briers, shrubs and trees) will be removed from the proposed excavation areas and chipped for mulch (beneficial use) for Army reuse or sale. Any trees located within the excavation area less than or equal to 2 feet in diameter will be cut at grade and either chipped and stockpiled within the footprint of the excavation area or transported to the construction and demolition (C&D) landfill. The root systems for the trees within the proposed excavation area that are cut at grade will be stockpiled and disposed of with the contaminated soil. Those outside the excavation area (i.e., within staging areas) will be disposed at the C&D landfill.

4.2.6 Locating, Marking, and Surveying of Injection Locations and Excavation Areas

A licensed land surveyor will be subcontracted to delineate the project work boundary, mark the DPT injection locations and excavation areas, mark the boundaries of the localized cap at Building 7689, and set the grades prior to and during placement of excavated material and again during backfilling activities. The surveyor will locate these areas based on coordinates provided by CB&I and mark items in the field with highly visible wooden stakes, tape, or pin flags. Surveying methods will follow the procedures specified in the Construction Quality Assurance Plan (CQAP) (Appendix E). The ISEB injection locations and excavation areas are shown on Figure 4-1 and Figure 4-2, respectively. The cap area is shown in Figure 4-6.

4.2.7 Well Installation

A new interface monitoring well (204-RS2824) will be installed in the northwest corner of the site in accordance with the procedures outlined in Standard Operating Project Procedure (SOPP) No. 17, *Monitoring Well Installation* (Shaw, 2013b). The interface well is anticipated to be 2-inch-diameter Schedule 40 polyvinyl chloride, with a 10-foot screen, completed with aboveground protective casings and guard posts, and completed to an estimated depth of 30 feet. Upon completion, the well will be developed in accordance with SOPP No. 8, *Well Development* (Shaw, 2013b). The well location is illustrated on Figure 4-3.

4.3 Baseline Groundwater Sampling and Well Closure and Replacement

Prior to substrate injection, baseline groundwater monitoring will be performed to define the pretreatment water quality conditions across the treatment area. Baseline groundwater samples will be collected for laboratory analysis from 26 overburden, interface, and shallow bedrock

monitoring wells adjacent to the treatment areas, as shown on Figure 4-3. The samples will be analyzed for the following analytes:

- VOCs by EPA Method 5030B/8260B
- Perchlorate by EPA Method 6850
- Explosives by EPA Method 8330A
- Dissolved gases (methane, ethane, ethene, and acetylene) by RSK-175
- Total and dissolved metals (manganese, arsenic, chromium, and iron) by EPA Method 3005A/6010C
- Anions (nitrate and sulfate) by EPA Method 300
- Iron II (using an on-site Hach colorimeter)
- Total organic carbon by EPA Method 9060
- Alkalinity by EPA Method SM2320B.

In addition, general water quality parameters (pH, temperature, conductivity, turbidity, ORP, and DO) and depth to groundwater will also be measured in the field during sampling.

Manganese and iron levels will be used to evaluate the extent of reducing conditions established upon injection of the substrates. The solubility of these metals increases as they transform from their relatively oxidized forms to reduced forms as reducing conditions are established. The increased concentrations of these metals and methane as well as decreased concentrations of oxygen, nitrate, and sulfate will be used to geochemically confirm the ORP level that will be established after introducing the reagents. Increased metals concentrations will be restricted to the zone of treatment and will exist temporarily until the EVO is consumed and microbial activity diminishes. Once the groundwater reverts to baseline (i.e., aerobic) conditions, the reduced metals will remineralize and become immobile.

Groundwater sampling will be performed using low-flow purging and sampling techniques. Further details of the sampling and analytical requirements for the baseline sampling are provided in the Data Collection Quality Assurance Plan (DCQAP) (Appendix F).

Monitoring wells located within the proposed excavation footprint will be closed prior to the excavation activities and replaced as part of site restoration activities. An informal well closure plan will be submitted to ADEM prior to initiating well closure activities. Four monitoring wells are expected to be affected by excavation activities:

- 204-RS2669
- 204-RS2684
- 204-RS2671
- K142-RS1224.

The total depth of these wells ranges from 25 to 65 feet bgs. Well locations are included on Figures 4-3 and 4-4. Following completion of excavation activities, a replacement well of similar depth and construction will be installed for each well disturbed by excavation activities.

Well closure activities will follow SOPP No. 21 (Shaw, 2013c) and be in accordance with the Alabama Environmental Investigation and Remediation Guidance (ADEM, 2005). Monitoring wells will be closed in place by filling each well's screened interval with clean silica sand to 2 feet above the top of the screen. After allowing time for the silica sand to settle, a 2-foot-thick bentonite seal will be added above the silica sand. Bentonite pellets are recommended and shall be poured slowly to avoid bridging. The bentonite seal will be allowed to hydrate per the manufacturer's instructions. Neat grout will then be emplaced above the bentonite seal with a tremie pipe for sealing the well. Neat grout is a mixture of portland ASTM International Type I or II cement, water, and bentonite. The organic-free bentonite (granular) will be added at a rate of 2 to 5 pounds of bentonite per 94-pound sack of cement to produce a grout that is 2 to 5 percent bentonite by weight. This will be mixed with 5 to 7.5 gallons of water to create a pumpable slurry. The pads, posts, and surface completions will be removed during the excavation activities. The well closure activities will be documented on the well closure form in SOPP No. 1 (Shaw, 2013b). Upon completion of well closure activities, a formal monitoring well closure report will be submitted to ADEM.

Following the completion of backfilling operations at RSA-204, replacement wells will be installed for those located within the injection and excavation areas. Drilling for the replacement monitoring wells will be conducted using hollow-stem auger methods. These methods are outlined in SOPP No. 20, *Drilling Unconsolidated Material* (Shaw, 2013b). Well installation procedures are provided in SOPP No. 17, *Monitoring Well Installation* (Shaw, 2013b). The wells are anticipated to be constructed with 2-inch-diameter Schedule 40 polyvinyl chloride with 10-foot screens and completed with aboveground protective casings and guard posts. Upon completion, the wells will be developed in accordance with SOPP No. 8, *Well Development* (Shaw, 2013b).

Existing monitoring wells within close proximity of the work zone will be conspicuously marked in the field for protection during construction. Although CB&I will safeguard existing monitoring wells, if a monitoring well is inadvertently damaged, the well will be closed.

Damaged wells required as part of the RSA-204 corrective measures activities will be replaced in kind.

4.4 Berm Removal

Following completion of the baseline sampling event, the earthen blast berms located on the north side of Building 7689 and along the western side of Building 7688 will be leveled to grade because of their location within the injection/excavation areas and the soil stockpiled in a separate portion of the site until construction activities are complete. Both earthen blast berms will be reconstructed to Army specifications during site restoration activities using only the stockpiled berm soil with additional clean backfill, as required.

4.5 Groundwater Treatment Activities

The ISEB activities will include preparation of the application and acquisition of an underground injection control permit (Appendix I), mobilization/demobilization, injection of the selected ISEB amendments into the perimeter well points and interior source area DPT locations, post-injection sampling (Section 4.16.2 and Appendix K), and reporting (Section 4.16.4).

Prior to the start of the corrective measures as part of design optimization, 21 well-point locations (and up to 10 stepout contingency locations) will be placed around the outside of each of the 10,000 µg/L plume locations. The proposed locations shown on Figure 4-1 contain a "204INJPZ" prefix as part of their location codes; 12 well points are planned for the northern area and nine are planned for the southern area. These well-point locations will serve a dual purpose being used both during design optimization to refine the perchlorate plume contours and during groundwater treatment to inject amendments at the perimeter of the source areas.

A solution of EVO and nutrient amendments will be injected for the groundwater ISEB prior to the soil excavation activity. As mentioned previously, amendments will first be injected into the perimeter plume core well points; the plume core DPT injections (locations on Figure 4-1 containing "204INJ" in the prefix of the location code) will follow after the perimeter well points are completed. The EVO solution will be injected into the contaminated saturated zone from bedrock to the top of the groundwater table using DPT. Pressurized injections of the solution into overlapping intervals will be used to enhance the anaerobic degradation of perchlorate in groundwater within the treatment zone. The anaerobic conditions produced by the addition of the EVO solution to groundwater will also promote the reductive dechlorination of other compounds, including TCE, within the treatment zone. Commercially available EVO emulsions are designed to be initially transported through the pore spaces and eventually to adhere to the aquifer matrix, providing a carbon source that will stay active for 3 to 5 years, depending on the amount of substrate injected and site conditions. As the EVO degrades, the fermentation

products will travel with groundwater flow, thereby extending the bioremediation treatment area beyond the source area.

The EVO and nutrient amendments will be used to target the two areas that have perchlorate concentrations exceeding 10,000 µg/L. An approximately 15-foot radius of influence was estimated based on experience at sites with similar lithology. To effectively cover the two areas selected for treatment (northern and southern areas), the EVO solution will be injected first within the existing well points (installed as part of design optimization) along the perimeter of the source areas (e.g., outer edge of the 10,000 µg/L perchlorate plume contour in both areas) (Figure 4-1). These 1¼ -inch diameter polyvinyl chloride casing injection-well points will be installed approximately 40 feet apart. The well points in the southern treatment area will be placed near the overburden-bedrock interface with a 10-foot screen interval across the 14 foot saturated thickness. With an average 26-foot saturated thickness in the northern treatment area, well points will be installed as paired clusters of deep and shallow points. Each deeper well point will have a 10-foot long screen, the bottom of which will be placed near the overburden-bedrock interface, and each shallow well point will have a 10-foot long screen, the top of which will be placed near the top of groundwater (at approximately 17-22 feet below ground surface). These small diameter well points installed by DPT will allow for pressurized injections through each of the 10-foot screens.

Next, pressurized injections of the amendments will be conducted in overlapping intervals using DPT at 37 injection well points (locations with 204INJ prefixes) within the source areas. Twenty-one locations are planned for the northern area and 16 locations are planned for the southern area (Figure 4-1); planned coordinates for these locations are presented in Appendix I (Table 1). The reagent injection point locations may be adjusted following confirmation of subsurface obstructions (e.g., utilities). The groundwater ISEB will precede the excavation in order to use the undisturbed soil overburden as a soil cap or cover. This should enhance the lateral distribution of the EVO solution into the targeted groundwater zones via pressurized injections. The first DPT injection locations will be selected near the injection well points, described above, and other existing monitoring wells to confirm the radius of influence, with subsequent locations adjusted as necessary. Injections will be conducted either top-down or bottom-up, depending on which is found to work better in the soils present at RSA-204. The EVO solution will be initially injected on 2.5-foot intervals at depths ranging from the top of bedrock to the groundwater table surface. This interval will be adjusted based on observations during injection activities.

The injections will distribute a food-grade EVO carbon source into groundwater and produce an ISEB treatment zone that stimulates microbial degradation of the perchlorate in soil and

groundwater. The anaerobic conditions produced by the EVO and nutrient additions should also promote reductive dechlorination of the TCE contamination remaining downgradient of the treatment areas (northwest corner of site [Figure 2-6]). MNA will be implemented on the perchlorate plume perimeter to evaluate the combined effects of the ISEB, source removal, and natural attenuation processes for arresting and reducing the plume's extent as well as monitoring the concentrations of TCE and explosive compounds.

A second round of DPT injections is planned approximately 1 year after the initial EVO solution injection to address any remaining residual hot spots or perchlorate rebound areas within the treatment areas. Approximately seven DPT locations for both source areas, or 20 percent of the 37 DPT injection locations, have been assumed in this second round of injections.

The following activities will be performed in support of the ISEB groundwater treatment:

- Establishment of temporary facilities and work areas
- Injection reagent mixing
- Reagent injection
- Performance monitoring (Section 4.16.2).

The reagent concentrations may be adjusted based on the observed site conditions. The reagent concentrations may be adjusted to provide the required amount of individual reagents to degrade the contaminants while limiting both excess reagent, which may result in excessive methane production, and insufficient reagent, which potentially results in incomplete degradation.

4.5.1 Temporary Facilities and Work Areas

Upon mobilizing to the site for reagent injection, a temporary facility or facilities will be established adjacent to the treatment areas within a fenced equipment staging and storage area to store the reagent and reagent mixing vessels. Placement of the tanks and the storage area will be coordinated with RSA. A nearby hydrant connection will be required, which will be fitted with a backflow preventer and a flowmeter. Upon completion of the injection effort, the temporary facilities will be demobilized and the site returned to its original condition.

4.5.2 Injection Reagent Mixing

Water will be transferred into a reagent mixing tank stationed adjacent to the injection pump for the preparation of the EVO solution. Determining an appropriate dosage for the various reagents is a function of the expected reagent distribution radius; thickness of the target horizon; soil type; groundwater velocity; effective pore space volume; electron acceptor demand for the dissolved and sorbed-phase perchlorate, TCE, and explosives; and the quantity of competing electron acceptors (e.g., oxygen, nitrate, sulfate, iron, manganese) in the dissolved phase.

For the purposes of calculating dosages, the target injection volume at any given injection point is 7 percent of the estimated average effective groundwater volume in the aquifer, using an estimated effective porosity of 2 percent. The VOC and electron acceptor concentrations measured during recent groundwater sampling events conducted, and past experience, were considered for the dosage calculations.

DAP and yeast extract will be added as microbial nutrients to make up the EVO solution. The DAP will be added according to a 100:10:1 carbon:nitrogen:phosphorus ratio in relation to the amount of EVO needed. The yeast extract or equivalent will be added at a 10 percent ratio by weight to the DAP amendment. Approximately 0.2 pound of DAP and 0.02 pound of yeast extract will be added per pound of carbon in the EVO raw material.

For the northern treatment area, 12 injection well points and 21 DPT locations are planned using an estimated 15-foot radius of influence. Approximately 2,500 gallons of EVO solution will be utilized, consisting of approximately 3,500 pounds of EVO, 585 pounds of DAP, and 60 pounds of yeast extract or the equivalent. In the southern treatment area, 16 DPT locations are planned along with nine injection well points. Approximately 700 gallons of EVO solution will be used, consisting of approximately 1,300 pounds of EVO, 220 pounds of DAP, and 20 pounds of yeast extract or the equivalent. A follow-up round of DPT injections is planned for 20 percent of the injection locations and intervals following the same EVO solution concentrations. A summary of the dosage calculations are provided in Appendix H.

4.5.3 Material Handling and Storage

All materials will be stored under ambient temperature in the fenced equipment staging and storage area.

The EVO will be transferred via pumps. The DAP and yeast extract or the equivalent will be added by hand to the reagent mix tank. There are no significant hazards associated with the previously discussed injected products. Material safety data sheets are provided in the SSHP (Appendix D).

4.5.4 Reagent Injection

A high pressure/flow rate delivery process was selected for the injections at RSA-204. The reagents will be direct-injected using a variable-speed positive displacement pump (piston type) capable of generating up to 1,000 pounds per square inch of pressure at a flow rate of up to 50 gallons per minute. High flow delivery is preferred over low flow delivery because it requires less mix water and generally reduces the potential for expansion of the plume. Conversely, low-flow injection essentially requires complete replacement of the aquifer pore volume. Under the

high-flow rate scenario, it is anticipated that the injected materials will replace only 10 percent of the aquifer's effective pore space. The DPT injections will begin at the perimeter injection locations and then work into the center of the plume to reduce the potential for the injections to cause the plume to migrate. The injection borings will be backfilled by tremie grouting a neat cement/bentonite grout in accordance with RSA and ADEM requirements. New injection borings will be required for the second round of injections; the locations and number of borings will be determined following review of the treatment performance data from the sampling conducted with the first injection round.

The DPT injections will use a pressure activated injection tip with a check valve to allow lateral delivery of the reagent and prevent backflow. The target flow rate for the injections is approximately 20 gallons per minute, which may be adjusted based on observations made during the injections. Injections will begin at approximately 20 pounds per square inch and increase until the flow rate reaches the target flow rate or the appropriate amount of reagent is injected, whichever is reached first. Injection pressures will be closely monitored during the injections.

4.5.5 Field Records

A CB&I field geologist or engineer will record all injection activities, specifically the following:

- Amount of reagent materials used per injection interval and point
- Injection volumes per interval and point
- Any reagent daylighting and estimated quantity
- Injection locations completed each day on a working map
- Personnel on site and times crews enter and leave the site.

4.6 Excavation Activities

The limits of the two soil excavation areas, along with the proposed stockpile locations are depicted on Figure 4-2. The excavation limits will be surveyed and staked prior to the start of excavation.

Excavation will be accomplished according to the Safety and Health Regulations for Excavations (Occupational Safety and Health Administration [OSHA] 29 Code of Federal Regulations Part 1926 Subpart P). For excavations deeper than 4 feet, soils will be excavated to maintain stable sidewalls (i.e., shield system, sloped or benched to 1½:1 horizontal:vertical). Spoils must be placed a minimum of 3 feet from the edge of the excavation. Soil generated by benching/sloping near the perimeter of the excavations will be segregated and sampled to determine whether it may be used for backfill.

The excavations will be dug to the average depth to groundwater beneath each excavation. Monthly groundwater elevation measurements are being collected from all site wells since the fall of 2015. As shown on Table 4-1, the average depth to groundwater is 15 feet bgs in the central area (Excavation Area 2) and 17 feet bgs in the southeastern area (Excavation Area 1). If groundwater is encountered at a depth shallower than the average depth to groundwater, the excavation will go no deeper than the depth groundwater is encountered. It is anticipated that approximately 10,500 cubic yards will be excavated from the central area and 1,560 cubic yards from the southeastern area.

A portion of Excavation Area 1 is located adjacent to Building 7689 (Figure 4-2). Where the stability of adjoining buildings, walls, or other structures is endangered by excavation, operations support systems shall be provided, such as shoring, bracing, or underpinning to ensure the stability of the structure. A professional engineer will perform an evaluation to determine the safe distance from the building for which excavation may be safely performed to ensure the safety of the workers and the stability of the structure.

Asphalt pavement or concrete surfaces (e.g., roadways and sidewalks) will be saw cut prior to excavation. Any clumps of soil will be removed from the concrete and asphalt and stockpiled with other soil from the area. As perchlorate is not a hazardous constituent, swipe testing of the concrete/asphalt debris will not be required prior to disposal/recycling. The concrete debris will be transported to the RSA C&D landfill or another appropriately permitted facility for disposal. Asphalt will be transported to the RSA recycling program's designated location for recycling.

The sump located in the southeastern excavation and the septic tank and abandoned drainlines in the central area will be removed through mechanical (e.g., trackhoe ram head, etc.) means and transported to the C&D landfill or recycled as appropriate. Since perchlorate is not a hazardous constituent, swipe testing of the structures will not be required prior to disposal/recycling.

The excavated material will be staged on impervious material such as plastic sheeting and covered with waterproof material (i.e., tarpaulin or 10-mil plastic sheeting). Containment should control runoff, leaching, or fugitive dust emissions. Dust at the site will be controlled with water using a water truck with hose and sprayers and mulch such as straw. CB&I will apply water to dry exposed areas until the surface is wet and repeat as needed. Visual observation will assure that water will be applied at rates so that runoff does not occur. In addition, all other equipment used at the site during cleanup operations will be operated in a manner that prevents further migration of contamination. Polymers, tackifiers, stabilizers, or chlorides will not be used for dust control. An action level of ½ the OSHA particulate not otherwise specified threshold

respirable fraction (2.5 milligrams per cubic meter) within or directly downwind of the work areas will be used to determine when dust suppression is needed. Dust levels will be monitored using a Data Ram PDR 1000 or equivalent real-time aerosol monitor.

4.7 Confirmation Sampling

Following completion of the proposed excavations, confirmation soil samples will be collected within the RSA-204 proposed excavation areas to verify that the soil contaminant concentrations do not exceed the CG for perchlorate. The confirmation sampling design is statistically based and follows the guidelines set forth in (1) Section 9.6 of ADEM General Soil Sample Collection Standard Operating Procedure #2150 Rev. 1.1 (ADEM, 2010a); (2) the August 13, 2010 guidance from ADEM, *In-situ Sampling for the Purposes of Waste Characterization/Disposal of Soil* (ADEM, 2010b); and (3) Pacific Northwest National Laboratory (2012) Visual Sample Plan.

Sidewall confirmation samples will be collected around the perimeter of the soil excavation areas at a maximum spacing of 25 feet between samples. Figure 4-4 presents the proposed layouts of the perimeter samples. A multipoint composite sample with a minimum of five aliquots will be collected for each 4-foot depth of sidewall from the ground surface to depth (see Figure 4-5 for compositing plan). Because the depth of each excavation is expected to be slightly different between the central and southeastern excavations, slightly different confirmation sampling schemes are proposed:

Area	Average Depth to Groundwater (feet bgs)	Sidewall Length (feet)	Sample Aliquots	Depths Along Sidewall (feet bgs)	Sample Depth Excluding Capillary Fringe (feet bgs)
Southeastern	17	25	4	0-5; 5-9; 9-13; 13-17	11-14
Central	15	25	4	0-3; 3-7; 7-11; 11-15	8-12

Each confirmation sample will represent a maximum sidewall area of 100 square feet. The points will include a center point of the 25-foot sidewall section plus aliquots from the upper and lower left and right quadrants of the sidewall section. If the sidewall confirmation samples do not achieve the CGs, the excavation will be expanded a minimum of two feet and then resampled. Any drains or outfalls that occur in the excavations will be targeted for sampling. Confirmation samples will not be collected from the floor of each excavation at RSA-204 because the excavation depths 15 and 17 bgs are based on the average depth to groundwater rather than contaminant depth. This depth includes the capillary fringe zone of the water table. In this zone, groundwater moves upward by capillary action into unsaturated vadose zone soils. Because of this behavior, soils in the capillary fringe zone are subject to contamination by groundwater. Based on Johnson and Ettinger (1991) modeling, the capillary fringe zone in the high-clay

content soils present at RSA is approximately 3 feet thick. Therefore, if perchlorate concentrations in the deepest confirmation samples are found to exceed the CG, an additional confirmation sample will be collected (in a separate sample collection event) from depths which exclude the capillary fringe zone. The decision to expand the excavation laterally at depth will be based on the results from the confirmation samples collected above the capillary fringe. These specific depths are shown in the preceding table ("sample depth excluding capillary fringe").

Confirmation samples will be collected using routine quality assurance/quality control sample frequencies (i.e., 10 percent field duplicates, 5 percent matrix spike/matrix spike duplicate). All sample containers, preservatives, and holding times will conform to the requirements specified in the DCQAP (Appendix F). The confirmation soil samples at RSA-204 will be analyzed for perchlorate using EPA Test Methods for Evaluating Solid Waste, Physical/Chemical Methods (SW-846), in accordance with the RSA installation-wide quality assurance program plan:

- Perchlorate – Method 6850.

Sample documentation, custody, packaging, and shipping will follow the procedures specified in the DCQAP. Custody will be maintained at all times by the CB&I sampling team prior to shipment to the analytical laboratory using standard chain-of-custody forms.

All analytical data generated from this project will be managed in accordance with the procedures specified in the DCQAP (Appendix F).

4.8 Remediation-Derived Waste/Investigation-Derived Waste Management

The management of excavated soils is discussed in Sections 4.9 and 4.10. Other remediation-derived waste and investigation-derived waste (IDW) generated during the CMI activities at RSA-204 are expected to include soil cuttings, decontamination fluids, purge water, and disposable personal protective equipment (PPE). All IDW will be containerized, labeled, and stored in compliance with the provisions of AAC 335-14 as applicable and as discussed in the AEIRG (ADEM, 2005). PPE that is contaminated by site media will be disposed of with the contaminated waste stream (i.e., PPE generated during soil excavation will be disposed at the Subtitle D landfill). PPE that is uncontaminated will be placed in trash bags and disposed in a dumpster at the CB&I field office (Building 7471) as normal household trash. Other types of IDW, if generated, will be managed in accordance with Table 2 of Appendix G of AEIRG (ADEM, 2005).

In determining whether to manage IDW as nonhazardous or hazardous, factors such as generator knowledge and real-time field measurements or observations will be considered. AAC 335-14-3-.01(2) allows the use of generator knowledge in the hazardous waste determination process. Generator knowledge consists of an evaluation of the following four factors:

1. ***Process Knowledge*** – The site processes are evaluated to determine if any activity might have generated a listed waste which still persists in soil or groundwater.

2. ***Past IDW Management Practices*** – IDW has been managed at RSA for over 20 years. Changes to regulations directing this management have been minor. The Army intends to follow management practices which have been accepted by ADEM during prior investigations.

3. ***Sampling Results from Past Waste Characterization Sampling*** – Historical waste characterization sampling may indicate whether future IDW is likely to be a nonhazardous waste or to have characteristics of a hazardous waste.

4. ***Sampling Results from Past Soil and Groundwater Samples*** – Historical sampling results from soil and groundwater sampling may indicate whether future IDW is likely to be a nonhazardous waste or have characteristics of a hazardous waste.

Field measurements would include organic vapor analyzer or photoionization detector readings. Records supporting the use of generator knowledge will be available for review at the CB&I field office (Building 7471).

For IDW considered to be nonhazardous using generator knowledge and field observations, soil cuttings and liquid waste will be containerized and stored on site pending sampling and analysis. Analytical testing and subsequent evaluations will be performed to determine if soil can be left on site or disposal at a Subtitle D landfill is needed. Sampling and analysis of IDW are specified in the DCQAP in Appendix F. Examples of nonhazardous soil IDW disposal practices for RSA-204 include soil disposal at a Subtitle D landfill. For nonhazardous water IDW, possible management options include processing through RSA's sewage treatment plant or an appropriate RCRA-permitted facility.

In the event that any soil IDW is determined to be hazardous, contingency actions will be taken to manage and dispose the waste as specified in SOPP No. 4.0, *Investigation Derived Waste* (Shaw, 2013b). A RCRA hazardous waste determination/evaluation is required by AAC 335-14-3-.01(2) and will be made utilizing waste identification criteria outlined in AAC R. 335-14-2-.01 through 335-14-2-.04. IDW believed to be hazardous will be containerized in 55-gallon drums or other suitable containers with tight-fitting lids or other covers. Presumed

hazardous IDW will be labeled, moved to a satellite accumulation area or 90-day storage within 72 hours, or managed on site in an on-site 90-day storage area, as specified in SOPP No. 4.0.

Analytical results from soil and groundwater IDW samples will be used to document if the waste is hazardous or nonhazardous and, for nonhazardous IDW, to determine the contaminant concentrations for disposal purposes. Types of analyses are site specific but may include toxicity characteristic leaching procedure (TCLP) VOCs, TCLP SVOCs, and TCLP metals. Waste for which TCLP results exceed limits specified at AAC 335-14-2-.03, Table 1, will be treated and disposed as a hazardous waste. EPA's Off-site Rule will be utilized to ensure that all RDW/IDW shipping offsite will be received at EPA-audited and -approved facilities.

Examples of disposal practices for hazardous waste include disposal of solid (soil) hazardous waste in a landfill permitted to accept the waste based on the specific contaminants and concentrations in the soil and treatment of hazardous wastewater at a facility that meets the definition of a wastewater treatment unit in AAC R. 335-14-1-.02.

4.9 Waste Characterization Sampling

Contaminated soils planned for disposal in Alabama will be stockpiled during the excavation at RSA-204. The stockpiles will be divided into individual decision units for sampling. Each decision unit will have a maximum volume of 200-cubic yard volumes. Grab samples will be randomly retrieved from three exterior points of the pile from a depth between 0 and 2 feet. Two additional samples will be taken from the interior of the pile at a depth between 2 to 5 feet. The grab samples from the five points within each decision unit will be composited. Each of these composites representing 200 cubic yards will be tested for perchlorate analysis. No additional quality assurance/quality control samples (other than the method-required batch quality control) will be required for the waste characterization samples.

In addition, clean stockpiles consisting of soils with perchlorate concentrations that are expected to be below the CG of 1.7 mg/kg will be generated at each site. Five-point composite samples will be collected from each clean stockpile at a frequency of one sample per 200 cubic yards and submitted to the laboratory for analysis of perchlorate. If the perchlorate concentrations are below 1.7 mg/kg, the soil will be deemed suitable for use as backfill. If the perchlorate concentrations exceed 1.7 mg/kg, the soil will be disposed of with the contaminated soil stockpile as nonhazardous waste.

Upon receipt of the analytical data, the waste characterization sample results will be compared to the regulatory levels for metals. Based upon similar soil excavation activities at other RSA sites (e.g., RSA-097/089, RSA-138M, RSA-087, and RSA-088), the perchlorate-contaminated soils at

RSA-204 are not expected to be characteristically hazardous. No known source of contamination involving a process and/or chemical triggering a listed waste code designation has been identified in the waste soils process of generation. Therefore, it is expected that the excavated soils at RSA-204 will be managed as a nonhazardous special waste and disposed in a Subtitle D landfill. The waste characterization results will be submitted to ADEM for approval, and an ADEM waste certification number will be obtained prior to disposal of the excavated soils.

4.10 Waste Soil Transportation and Disposal

CB&I will use a licensed transportation and disposal subcontractor to complete these activities. It is assumed that the soil will be disposed as special waste (nonhazardous) at a Subtitle D landfill. Transportation and disposal of the excavated waste will begin after approval by ADEM (typically 4 to 6 weeks after receipt of Solid Waste Profile Sheet) and the selected waste disposal facility. Prior to transport, an RSA representative will review and sign the waste manifests.

During loading activities, CB&I will document the quantities of waste loaded onto the dump truck and facilitate the bill of lading or shipping paper documentation for the nonhazardous waste shipments. All hazardous waste sent off site for disposal must be on a hazardous waste manifest and have a Land Disposal Restriction notification. Transportation will comply with all U.S. Department of Transportation regulations. CB&I will coordinate with the transporters so that the waste will be shipped to arrive on schedule at the landfill. CB&I will receive written approval from the landfill prior to shipping waste to their facility. The landfill will provide a certificate of disposal for each load received and processed.

The selection of landfill(s) to accept the perchlorate-impacted soil is performed after a waste determination is made. Landfill selections are dependent on current transportation and disposal contracts in place at the time the work is completed. However, in all cases, the landfill selected will be protective.

Landfills may include both in-state and out-of-state, fully permitted Subtitle D facilities. Whether in-state or out-of-state, the selected landfill must adhere to EPA's minimum national technical criteria (regulations) including specific requirements for location, operation, design (e.g., liner, leachate collection, run-off controls, etc.), groundwater monitoring, corrective action, closure and post-closure care, and financial assurance responsibility, as well as to any more stringent state requirements. The Army at RSA provides further assurance that wastes are properly disposed through voluntary compliance with EPA's Off-Site Rule. The Off-Site Rule states that Comprehensive Environmental Response, Compensation, and Liability Act (CERCLA) wastes may only be placed in a facility operating in compliance with RCRA or other applicable federal or state requirements. This rule further prohibits the transfer of CERCLA wastes to a land

disposal facility that is releasing contaminants into the environment, and requires that any releases from other waste management units must be controlled. Compliance with these federal and associated state regulations ensures that the perchlorate-impacted soil from RSA-204 will be placed in a lined landfill that meets minimum technology requirements under RCRA Section 3004(O), all requirements in 40 Code of Federal Regulations Part 257 and Part 258, and applicable state regulations.

4.11 Cap Construction and Post-Excavation Activities

4.11.1 ISEB Application

In order to enhance and extend the ISEB treatment of the source area groundwater, EVO solution will be applied over the floor of the excavation areas prior to backfilling. Approximately 20,000 gallons of a 1-to-5 percent EVO solution will be added. The EVO solution will ferment to create reducing conditions, and promote contaminant degradation at and near the groundwater surface.

4.11.2 Backfilling

Upon completion of all soil excavation activities, CB&I will obtain fill material from a borrow area on RSA or another approved off-site borrow source or equivalent. If sampling of the borrow source material has not been conducted, CB&I will sample the material to confirm it is acceptable for use as backfill at the sites. The borrow material sampling, if required, will include one 5-point composite sample analyzed for target compound list (TCL) SVOCs, TCL pesticides/polychlorinated biphenyls, perchlorate, and target analyte list metals and one sample analyzed for TCL VOCs (Appendix F).

The analytical results for target analyte list metals will be screened against background screening values and residential soil PSVs as supplemented by a site-to-background evaluation, if needed. Soil concentrations for VOCs, SVOCs, and pesticides/polychlorinated biphenyls will be screened against their respective residential soil PSVs to demonstrate that the material is acceptable for use. If an existing borrow source is utilized, the analytical parameters and acceptance limits will be at least as stringent as those proposed for new borrow sources. Excavated material will be replaced with locally available backfill material that is best suited for the anticipated future use. A layer of stone will be added across the bottom of the excavation to cover the EVO liquid prior to backfilling. This stone layer will allow for proper backfill compaction after application of the EVO. Approximately 16,402 cubic yards of fill material is expected to be needed. Appropriately graded structural fill will be used to backfill around existing and/or future building foundations.

The backfill material properties, placement methods, and testing requirements will generally conform to the guidance provided in Unified Facilities Guide Specifications for Earthwork Section (Appendix G). The fill material will be dumped near each excavation area using a dump truck and placed in lifts no greater than 1 foot high, and each lift will be compacted prior to placement of the next lift. Any stockpiled soil removed during excavation and determined to be clean by sampling will also be placed in the excavation. As discussed in Section 4.9, clean stockpiled soil with perchlorate concentrations equal to or below the CG of 1.7 mg/kg will also be used to backfill the excavation.

Structural fill will be placed and spread to a loose-lift thickness that is appropriate for the type of material and compaction equipment being used. Structural fill will be used to support driveways, roads, and any additional paved areas. Compaction will be accomplished using industry-accepted heavy tamping rollers, heavy rubber-tired rollers, heavy vibratory compactors, or heavy sheepsfoot rollers, except where space restrictions do not allow their use. In that case, light steel-drum, vibratory rollers; hand-operated, vibratory, plate compactors; or power tampers will be used. Fill adjacent to structures will be placed in a manner that will prevent damage to the structures and will allow the structures to assume the loads from the fill gradually and uniformly. Height of fill adjacent to a structure shall be increased at approximately the same rate on all sides of the structure.

Typically, structural fill is compacted to a dry density that is 95 percent of maximum dry density determined by ASTM D1557. Care will be taken to moisture condition the fill during placement and compaction. The moisture content of fill including surfacing material, structural fill, and subbase during placement and compaction will be controlled (typically within ±3 percent of the optimum moisture content determined by ASTM D1557). Field density tests using ASTMD 6938, ASTMD 2167, and/or ASTMD 1556 will be performed during placement at specified frequencies to determine if minimum densities are being achieved.

In the event that a meaningful moisture-density relationship cannot be developed for granular fill, placement will be controlled using relative density determinations in accordance with ASTM D4253 and D4254. In this case, the moisture content of the fill during placement and compaction will be a minimum relative density (typically of 70 to 85 percent) for granular materials, depending on the material and application.

During backfill and site restoration, dust at the site will be controlled as described in Section 4.6.

4.11.3 Cap Construction

As indicated in Section 3.3, it may not be possible to excavate the area immediately adjacent to Building 7689 because of concerns regarding safety and the stability of the building. Consequently, if confirmation sampling results from the excavation sidewalls adjacent to the building indicate contaminants remain in soil at concentrations greater than the CG, an engineered barrier (e.g., cap) will be constructed within the foundation protection area (inaccessible area for excavation adjacent to Building 7689) to restrict surface water infiltration into the subsurface and help reduce the potential for contaminants to leach from the site (Figure 4-6). If needed, the engineered barrier will be constructed as described below. The engineered barrier has been designed to meet the requirements of a RCRA Subtitle D site cover in accordance with AAC 335-13-4.20 and 40 Code of Federal Regulations Part 258.60.

Design of Cover System

The cover system near Building 7689 is designed to minimize infiltration and erosion and therefore will consist of an erosion layer underlain by an infiltration layer and a foundation layer. In accordance with AAC 335-13-4.20, the infiltration layer must consist of a minimum of 18 inches of earthen material and/or a synthetic layer that has a permeability less than or equal to the permeability of any bottom liner system or natural subsoils present, or a permeability no greater than 1×10^{-5} centimeters per second, whichever is less.

Foundation Layer

Prior to installation, existing soil within the foundation protection area will be excavated to between 6 and 12 inches bgs. If needed, additional subgrade material will then be installed from borrow material taken from an approved borrow source that is relatively free of debris, sticks, stones, or other deleterious material. A 3- to 4-inch-thick gravel base layer will be placed above the subgrade. The foundation layer is designed to prevent failure of the cover system due to settlement and provide appropriate grade for drainage control away from the building. To provide positive drainage, the surface slope of the foundation layer of the cover system will be graded to a minimum of 3 percent. The subgrade and base material will be compacted in order to produce a surface that is smooth, firm, and unyielding.

Infiltration Layer (Geosynthetic Clay Liner)

The infiltration layer will consist of a polyethylene liner such as Claymax® 200R geosynthetic clay liner, manufactured by CETCO, or an engineer-approved equivalent. This barrier layer will have a permeability of no greater than 5×10^{-9} centimeters per second. The liner will be installed in accordance with the manufacturer's technical specifications. Once the foundation layer approval has been completed, the liner will be delivered to the working area in its original packaging. If multiple pieces of the liner are required, deployment of the liner will begin at the

lowest point and move up, with subsequent segments shingled on top of the previously laid pieces. Individual segments of the liner will be heat sealed or overlapped such that the overlapping edges allow water to flow from the top panel to the lower. The minimum dimension of the longitudinal overlap shall be 12 inches.

Visual Demarcation Barrier

A brightly colored visual demarcation barrier will be placed immediately above the infiltration layer. The visual demarcation barrier will function as a warning indicating that digging should not be completed in this area. The visual demarcation barrier will consist of an orange or other brightly colored woven geotextile fabric that will allow water to pass through to the underlying infiltration layer.

Erosion Control Layer

Once the infiltration layer (e.g., low-density polyethylene liner) is installed and approved, a concrete erosion control layer will be placed. The concrete will be sloped to drain away from the building as well as to facilitate drainage toward the storm water system along Falcon Road. The concrete will be a minimum of 4 inches in thickness and have a minimum strength of 3,000 pounds per square inch. Expansion joints, including joints along the edge of the building will be filled with a flexible watertight sealant to prevent water infiltration at the joints. If at any time the infiltration layer is damaged during the concrete placement, it will be immediately repaired. A designated CB&I field representative will monitor installation and ensure that overlapped seams are maintained during construction. The final surface slope will not be less than 3 percent.

4.11.4 Site Restoration

Once the areas have been backfilled and compacted, clean topsoil will be placed over them. The disturbed areas will then be seeded and mulched to stimulate revegetation and reduce the potential for soil erosion. Seed and mulch will be applied to all disturbed areas according to the BMP from ASWCC (2009) (Appendix G). The earthen blast berms will be reconstructed (Section 4.4). The four wells that were closed will be replaced by new wells (204-RS2791 through 204-RS2794) (Section 4.3). Roads and driveways impacted as a result of excavation activities will be repaired/replaced in accordance with ALDOT and Army requirements for road construction at RSA.

A site inspection will be conducted 2 to 4 weeks after the seeding to confirm the revegetation is successful. If revegetation is unsuccessful, the site will be reseeded until an adequate stand of vegetation is present. All temporary fencing, plastic sheeting, hay bales, wooden stakes, and other project-related items will be removed from the site and disposed in accordance with SOPP 4.0, *Investigation Derived Waste* (Shaw, 2013b).

4.11.5 Equipment Decontamination

CB&I will designate an area within the boundary of the work areas at RSA-204 and adjacent to vehicular ingress and egress areas, for equipment decontamination. A decontamination pad typically consists of a soil-bermed area covered with multiple layers of visqueen sheeting where gross contamination can be removed from equipment. The decontamination pad will contain a sump area or low area where wash water from pressure washing will drain to be pumped into a portable holding tank. Decontamination fluids will be sampled for VOCs, SVOCs, perchlorate, and pesticides. Decontamination fluids will be managed as discussed in Section 4.8. Settled soil within the sump will be disposed of with the excavated materials from RSA-204.

Nondisposable sampling equipment will be decontaminated prior to beginning work at the site and prior to the collection of individual samples to prevent cross contamination and maintain the integrity of the environmental samples collected. All sampling equipment and heavy equipment will be decontaminated in accordance with procedures specified in the RSA installation-wide quality assurance program plan (QAPP) (Shaw, 2013b), which was prepared in accordance with Appendix E of the AEIRG (ADEM, 2005).

4.11.6 Temporary Storm Water Erosion and Sediment Control Removal

Upon completion of site restoration activities, temporary erosion and sediment controls will be removed and disposed off site at the RSA construction & debris landfill. The silt fence will remain in place until after the vegetation is established. Once the silt fence is removed, the posts will be pulled from the ground and the remaining disturbed area will be reseeded in accordance with the best management practices in Appendix G. The removed silt fence will also be disposed off site at the RSA C&D landfill.

4.12 Demobilization

Personnel, equipment, and subcontractors will be demobilized from the project site after completion of remedial activities. A small crew and minimal equipment will be retained as required to remove surplus materials and clean staging areas.

Demobilization will primarily consist of disassembly, packing, and return of rented equipment to suppliers and travel for personnel back to their home offices.

4.13 Inspections for Field Activities

Inspections will be performed to determine compliance with this work plan. The inspection criteria are included in the field audit checklist (Appendix E) and will be verified during inspection activities. Inspections may be performed and verified through visual observation,

measurement of materials or equipment, examination of documentation/certification, evaluation of performance, or testing.

Inspections will be performed using a three-phase inspection method. Participants in the inspections typically include but are not limited to the task subcontractor, the project quality control manager, the regulatory representative, and the project health and safety representative. The preparatory inspection(s) are performed prior to start-up and will examine training, procedures, equipment and materials, work plans and documents, and overall readiness to perform work. Initial inspection(s) are performed when work begins on a particular feature of work and include an examination of the quality of workmanship and a review of control testing for compliance with work plan requirements. Follow-up inspection(s) are then performed to verify compliance with procedures. Follow-up inspections will ensure a continuation of quality and safety standards established during preparatory and initial inspections until completion of the definable work feature. Final follow-up inspection(s) will be conducted at the completion of the activity. The final follow-up inspection will be performed to ensure that the completed feature of work meets the work plan requirements. Any deficiencies noted during this inspection will be documented and a determination of the corrective actions necessary to mitigate the deficiency will be made. All significant deficiencies will be corrected prior to completion of the activity. Records of inspections will be maintained in the project files. At a minimum, inspection files will include inspection reports/checklists, inspection responses, any supporting documents, and applicable comments.

4.14 Land-Use Controls

LUCs will be implemented in accordance with AAC 335-5 (ADEM, 2009) and ADEM Memorandum #304 (ADEM, 2010a). LUCs that will be implemented at the Building 7689 area of RSA-204 include institutional controls (Figure 4-6). The following institutional controls will be implemented at RSA-204:

- Implementation of an EUR in accordance with ADEM (ADEM, 2010a) that will restrict residential use in the area of RSA-204
- Incorporation of the EUR into the facility Master Plan as required by ADEM (ADEM, 2010a)
- Recording of the EUR in the land records for the property, as required by AAC 335-5-.01(2)(j).

Specific activities associated with long-term site operation, maintenance and monitoring, and execution of the LUCs for the localized cap and Building 7689 will be established and included in a LUC plan or equivalent document. Inspections of RSA-204 will be conducted on an annual

basis and include noting any changes in land use inconsistent with the LUCs. The corrective measures activities will not restore the localized cap area to unrestricted use. The presence of perchlorate-contaminated soil above the CG northeast of Building 7689 is a leaching threat to groundwater. The localized cap over this perchlorate-contaminated soil that cannot be excavated due to the presence of the building will require LUCs (e.g., dig restriction, cap inspections and maintenance, and warning signs).

4.14.1 Survey Plat

In accordance with the Permit (ADEM, 2016), where residual contaminant concentrations remain in place at levels greater than those appropriate for unrestricted land use, RSA will submit a survey plat indicating the locations and dimensions of the contaminated areas within RSA-204 and the concentrations of hazardous constituents. The plat shall be submitted to the local authority with jurisdiction over local land use and to ADEM as part of the EUR. This plat must be prepared and certified by a professional land surveyor registered in the state of Alabama, be filed with the local zoning authority or the authority with jurisdiction over local land use, and contain a prominently displayed note stating RSA's obligation to limit the property to the specified restricted uses. The survey plat shall be maintained as described in the Permit until RSA can demonstrate to ADEM that the levels of hazardous constituents in all contaminated media at RSA-204 are within limits appropriate for unrestricted land uses.

4.14.2 Environmental Use Restriction

An EUR is required when an approved CMI allows a cleanup that will not result in remediation of the property or portions of the property to unrestricted use. The purpose of an EUR is to ensure that risks to human health and/or the environment are properly managed by imposing activity and use restrictions on the applicable portions of the property and making these restrictions a legal obligation until the EUR is removed. The proposed EUR is provided in Appendix J for review by ADEM.

Once the draft EUR is approved, ADEM will execute and return the original document to RSA to be filed in the appropriate land records (Madison County Judge of Probate Office) within 30 days of receipt and no later than the submission of the survey plat. Certification that the notice of EUR was recorded will be submitted to ADEM. This certification will include a copy of the EUR and the document in which the notation was placed. RSA will maintain the EUR until demonstrating to the satisfaction of ADEM that hazardous constituents in all contaminated media at site RSA-204 are within limits appropriate for unrestricted land uses.

If the property is transferred to an owner that is not the federal government, an environmental restriction will be executed and filed at that time in accordance with AAC 335-5 (ADEM, 2009).

4.15 Corrective Measures Implementation Reporting

CMI reporting will be prepared in accordance with Section VIII.D of the Permit and AEIRG (ADEM, 2005) as follows:

1) CMI Report – Prepared following the baseline groundwater sampling, first round of injections, excavations, backfilling, cap installation, and implementation of LUCs around the localized cap area. This report will demonstrate that the cleanup goal for soil has been reached.

2) CMI Effectiveness Report – Prepared annually and presents the post-injection monitoring data and progress toward the CGs for groundwater. It also presents the completed cap inspection and LUC checklist ensuring the integrity of the cap.

3) Final Report of Corrective Measures – Prepared upon attainment of CGs for constituents in groundwater.

As indicated in the CQAP, the daily reports (including daily construction logs, etc.) will be provided to the Project Manager or designee during CMI activities. The requirements for preparation and submittal of daily project documentation are outlined in the CQAP (Appendix E).

4.16 Post-Construction Scheduled Activities

Post-construction scheduled activities include operation and maintenance of the cap, groundwater monitoring and data evaluation, inspections, and reporting.

4.16.1 Cap Operation and Maintenance

RSA will properly operate and maintain all facilities at RSA-204 to achieve compliance with the conditions of the Permit (ADEM, 2016). Proper operation and maintenance includes effective performance, adequate funding, adequate operator staffing and training, and adequate laboratory controls, including appropriate quality assurance procedures.

The cap will be monitored, maintained, and repaired, as necessary, to ensure its long-term effectiveness. Monitoring will consist of regular inspections of the cap and surrounding vegetation. Repairs will be made as required (Section 4.16.3).

4.16.2 Groundwater Monitoring and Data Evaluation

RSA will continue groundwater monitoring at RSA-204 as detailed in the Long-Term Groundwater Monitoring Plan for this site (Appendix K).

Groundwater monitoring will commence after the first round of reagent injections has been conducted. The schedule for the first year will consist of sampling approximately 30 days, 120 days, 210 days, and 300 days after the first injection round. Replacement wells installed following the completion of excavation activities will be added to the next scheduled sampling

event following their installation and development. Samples will be collected from the 26 groundwater monitoring wells in and around the treatment area as shown on Figure 4-3. The rationale for well selection, frequency of sampling, procedures and analytical parameters, and reporting is discussed in detail in Appendix K. The samples will be collected using low-flow purging and sampling techniques. The long-term groundwater monitoring samples will be analyzed for the same analytes and field parameters as the baseline sampling event.

The data collected from the baseline groundwater sampling and the quarterly first year sampling events following the first injection round will be used to plan the second round of injections. A second round of DPT injections is planned approximately 1 year after the initial EVO solution injection round to address any remaining residual hot spots or perchlorate rebound areas within the treatment areas. The sampling frequency during this second year as well as the third year will be semiannual. Groundwater sampling in years 4 through 30 (anticipated to be the end of the corrective measures) will be conducted annually.

4.16.2.1 Data Evaluation and Interpretation

The primary objective of the groundwater monitoring program for RSA-204 is to determine whether the corrective measures reduce COC concentrations in groundwater beneath the site to levels determined to be acceptable to human health (i.e., cleanup goals). This will be determined based on the results of a statistical test or other methods. Statistical analysis will follow ADEM Administrative Code 335-14-5-.06(8)(h) and EPA guidance for groundwater monitoring at RCRA facilities (EPA, 1989; 1992; and 2009).

As allowed under these regulations, data from eight groundwater sampling rounds (years 1 through 3) will be used to calculate nonparametric 95 percent upper tolerance limits or 95 percent upper prediction limits for the site COCs. These values will be calculated separately for the overburden and bedrock groundwater zones. Groundwater data collected during subsequent sampling events will be compared to these values. COCs that exceed these values may be subjected to additional analysis as allowed in ADEM Administrative Code 335-14-5-.06(8)(h). The additional analyses may include, for example, control charts, Wilcoxon rank sum tests, box plots, and/or temporal trend analysis, as appropriate. Specific evaluation techniques will depend upon the detection frequencies and statistical distributions of each COC. For example, one COC concentration at a given well may exceed the site-specific upper tolerance limit or upper prediction limit, and that could be either a random occurrence or indicative of an increasing trend. Trend analysis will indicate if a trend is present and whether it has statistical significance.

Well data sets that pass statistical comparison tests (i.e., wells that do not demonstrate statistically significant increases over baseline concentrations) for all COCs will be sampled on an annual basis, in accordance with planned activities. Wells that fail statistical comparison tests for one or more COCs will be resampled. Following the collection of these additional data, statistical evaluation will again be performed and reported, along with recommendations for adjustment to sampling frequency, if appropriate.

Non-statistical methods may also be used to characterize RSA-204 groundwater conditions and may include the following:

- ***Hydrographs.*** Graphs of water levels versus time may be constructed to determine increases, decreases, seasonal, or man-made fluctuations in groundwater levels.
- ***Potentiometric Surface Maps.*** Depths to groundwater from multiple wells may be used to construct potentiometric surface contour maps and estimate flow directions.
- ***Concentration-versus-Time Plots.*** Graphs of COC concentrations versus time at each well will be constructed for each data set subjected to trend analysis. This supports the identification of trends and helps determine if concentration changes are related to changes in water level, changes in groundwater flow directions, or natural attenuation.
- ***Plume Maps.*** Maps depicting the physical distribution of chemical constituents will aid in determining movement of plumes.
- ***Geochemical Evaluation.*** For inorganic constituents that fail statistical comparison tests, geochemical evaluation may be performed to determine which concentrations may be naturally elevated and which concentrations may have a contaminant source.

4.16.2.2 Reporting

Based on the proposed sampling schedule, an annual CMI effectiveness report will be prepared after four quarters of data collection for the first year of the LTM and then after two semiannual data collection events for the following two years to demonstrate the effectiveness and success of the final corrective action program for RSA-204 groundwater. The effectiveness report will be compliant with provisions of the ADEM Administrative Code Rule 335-14-5-.06(10), which states that a compliance monitoring program must be implemented encompassing the extent of the contaminant plumes, and be maintained as long as necessary to achieve compliance with the CGs. The annual report will discuss the most recent sampling events and relate the findings as they pertain to treatment performance for the groundwater contaminants. The groundwater flow rate and direction in the overburden/interface zone will be determined annually and the data and maps will be included in effectiveness report pursuant to ADEM AAC Rule 335-14-5-.06(10)(e). The RSA-204 compliance monitoring program will address provisions for determining whether

there is statistically significant evidence of increased contamination for any chemical parameter or hazardous constituent pursuant to ADEM AAC Rule 335-14-5-.06(10)(d) and ADEM AAC Rule 335-14-5-.06(10)(f).

Recommendations for changes to the sampling frequency, wells sampled, and parameters for analysis, if appropriate, will be included in the reports. At a minimum, the groundwater monitoring report will include a discussion of sampling activities, tables, and maps to document contaminant concentrations in groundwater, and an evaluation of the groundwater contaminant data. Other recommendations may include installation of additional monitoring wells and resampling for verification of sampling results. Record keeping for data and reports are described in the installation-wide QAPP (Shaw, 2013b).

4.16.3 Inspections

General site inspections of the localized cap at Building 7689 shall be conducted semiannually to ensure that the integrity of the engineered cover is maintained and to ensure that land use remains appropriately restricted per the environmental restriction.

- Inspections will consist of a complete walkthrough and visual inspection of the cap area.
- The capped area will be covered with concrete and adjacent areas are the responsibility of the RSA operations and maintenance staff to mow and maintain.
- Repair of a disturbance or breach of the cap shall be initiated within 10 days of identifying the need for such repairs.
- Repairs to the warning signs shall be completed as needed and initiated within 10 days of identifying the need for such repairs. Prior to modifications in the frequency of inspection, the Army will submit a request to ADEM for review and approval.

The frequency of inspections can be scaled back to once per year, once conditions of the cap have stabilized over a minimum period of two years. The cap and LUC inspection form is included in Appendix K. Completed cap and LUC inspection forms will be included in the CMI effectiveness reports. Prior to modifications in the frequency of inspection the Army will submit a request to ADEM for review and approval.

4.16.4 Reporting

RSA will provide annual CMI effectiveness reports documenting groundwater monitoring results, operation and maintenance of the cap, site inspections, corrective actions, and LUC inspections.

5.0 Contingencies

The implementation of corrective measures is based on the best information currently available for RSA-204. It is recognized that variations from this CMI work plan may be required during the execution phase of the work in order to fully address actual site conditions in a timely manner that is protective of human health and the environment. The Army, ADEM, or other relevant parties may take actions to grant such variances from this CMI work plan during the corrective measures process. Any variance will be documented and communicated at the time of occurrence and included in the CMI report.

Some potential site conditions that may be encountered at RSA-204 are discussed in this chapter.

5.1 Excavation Beyond Proposed Boundaries

The soil excavations at RSA-204 will proceed until the CG for perchlorate has been achieved. The procedures for overexcavating sidewalls are presented as follows:

- If the sidewall confirmation samples do not achieve the CG, the failing section will be expanded outward a minimum of one bucket width (approximately 2 feet) and resampled. The overexcavation process will continue until the CG has been achieved or further expansion of the excavation would threaten the stability of Building 7689 for Excavation Area 1.

Since the excavation will extend to the average depth to the water table, the excavation will not be expanded downward.

5.2 Discovery of Subsurface Contaminant Sources

The sump near Building 7689 in Excavation Area 1 and the abandoned drainlines from the sump to the septic leach field in Excavation Area 2 are the only subsurface contaminant sources expected to be encountered during excavation activities. No additional subsurface contaminant sources (e.g., subsurface piping, drains, or other undiscovered sub-slab contaminant sources) are expected to be encountered during the RSA-204 excavation activities. If any of these subsurface contaminant sources are encountered during the excavation, the feature will be handled in the following manner:

- If free liquid is found within the feature, it will be addressed as follows:
  - Small amounts will be mixed with dry soil from the excavation or an absorbent until no free liquid is visible.
  - Amounts too large for mixing/absorption will be removed, tested, and disposed of as a separate waste stream.

- Abandoned piping, drains, etc., that are within the excavation area will be excavated and staged along with the surrounding soil and disposed of in like manner with the surrounding soil.

- If a conduit extends outside the excavation and that boundary of the excavation has passed the CG, the conduit will be plugged with at least 2 feet of cement grout.

5.3 Excavation Dewatering

In the event that groundwater infiltration or storm water inhibits excavation activities at the RSA-204 site, the water will be removed from the construction area by pumping. Storm water controls will be implemented to direct potential run-off away from the site prior to reaching the limits of construction. The water will be passed through silt fence barricades or equivalent. Any water that needs to be removed from the excavation will be pumped into a tank prior to transport and disposal as a remediation-derived waste.

5.4 Excavation of Unknown Utilities

If unknown utilities are discovered or existing utilities are compromised during excavation, work will stop in that portion of the work area until the utilities are identified and either relocated or repaired by the utility company or other appropriate authorities. Continuation of work in other portions of the project site will depend on an evaluation of potential hazards related to the utility issue. That evaluation will be performed by the project safety officer in consultation with the CB&I Health and Safety Manager.

5.5 Saturated Soil Removal

In the event contaminated soil becomes saturated in an excavation or stockpile area, the site manager will initiate measures to ensure that the soil can be prepared for transport and disposal. Those measures may include one or more of the following:

- Create an area within or adjacent to the affected area where excess water is allowed to drain and can then be collected.

- Mix saturated soil with dry soil (i.e., after waste characterization) ex situ prior to disposal.

- As a last resort, add absorbent to ensure no free liquids are present during transportation to the disposal facility.

5.6 Discovery of Munitions and Explosives of Concern/Chemical Warfare Materiel

Available information including historical records and recent environmental sampling data was reviewed with respect to munitions and explosives of concern (MEC), chemical warfare materiel (CWM), or chemical agent (CA) potential at RSA-204. The review indicated that the probability

of encountering measurable concentrations of CWM or degradation products is none. The probability of encountering UXO is low. The hazard evaluation process is documented in the "Evaluating MEC/CWM/CA Hazards in Support of HTRW Investigations" form (MEC/CWM/CA Hazard forms) provided in Attachment 1 of the SSHP (Appendix D). Based on this evaluation, it was determined that CA monitoring or onsite UXO avoidance support will not be required for the CMI. However, on-call UXO construction stand-by support will be utilized for low probability UXO. In the event any suspicious item is encountered that cannot be positively identified by qualified UXO personnel as not presenting an explosive hazard, all work shall stop and the Project Manager and Health and Safety Manager will be notified.

6.0 References

Alabama Department of Environmental Management (ADEM), 2016, ***Redstone Arsenal's Alabama Hazardous Wastes Management and Minimization Act Hazardous Waste Storage Facility, Thermal Treatment, Solid Waste Management Unit Corrective Action Permit, Modification No. 8***, 3 June.

Alabama Department of Environmental Management (ADEM), 2010a, ***Memorandum # 304, Compliance with Land Use Control Requirements for Federally Owned Property***, September.

Alabama Department of Environmental Management, (ADEM), 2010b, Memorandum from James L. Bryant, Environmental Services Branch, ***In-situ Sampling for the Purposes of Waste Characterization/Disposal of Soil***, August.

Alabama Department of Environmental Management (ADEM), 2009, Administrative Code r. 335-5, ***Land Division – Uniform Environmental Covenants Program***, Revised Effective May 26.

Alabama Department of Environmental Management (ADEM), 2008, ***Alabama Risk-Based Corrective Action Guidance Manual***, Revision 2, April.

Alabama Department of Environmental Management (ADEM), 2005, ***Alabama Environmental Investigation and Remediation Guidance***, September.

Alabama Soil and Water Conservation Committee, 2009, ***Alabama Handbook for Erosion Control, Sediment Control, and Stormwater Management of Construction Sites and Urban Areas***, March.

Alabama Department of Transportation, 2008, ***Standard Specifications for Highway Construction***.

Bhate Environmental Associates, Inc. (Bhate), 2003, ***Draft Confirmatory Sampling Report, Solid Waste Management Units (85, 86, 158, 159, 160, 161, 162, 163, 164, 165, 166, 167, 168, 169, 170, 171, 172, 173, 174, 175, 176, 177, 178, 179, 180, 181, and 182), Redstone Arsenal Huntsville, Alabama***, April.

CB&I Federal Services LLC (CB&I), 2016, ***Final Revision 1, Corrective Measures Study, RSA-204, Oxidizer Facility, Building 7691, Operable Unit 10, Redstone Arsenal, Madison County, Alabama,*** prepared for Mission and Installation Contracting Command, May.

CB&I Federal Services LLC (CB&I), 2015a, ***Revision 1, RCRA Facility Investigation Report, RSA-146 Groundwater Site, Groundwater Unit GW-02, Operable Unit 19, U.S. Army Garrison-Redstone, Madison County, Alabama,*** prepared for Mission & Installation Contracting Command, December.

CB&I Federal Services LLC (CB&I), 2015b, ***Community Involvement Plan, U.S. Army Garrison-Redstone, Madison County, Alabama,*** prepared for Mission & Installation Contracting Command, September.

CB&I Federal Services LLC (CB&I), 2014, ***Corrective Measures Design Study Work Plan, RSA-204, Oxidizer Facility, Building 7691, Operable Unit 10, Redstone Arsenal, Madison County, Alabama,*** prepared for Mission and Installation Contracting Command, June.

CH2M Hill, 1998, ***Draft Final Report of Findings, RARE North Plant Phase II EBS, Redstone Arsenal, Madison County, Alabama***, prepared for the U.S. Army Corp of Engineers, Mobile District, Mobile, Alabama, April.

Conestoga-Rovers & Associates (CRA), 1996, ***Environmental Baseline Study Phase I Report, Redstone Arsenal Rocket Engine Assembly Facility (RARE), North Plant, Redstone Arsenal, Madison County, Alabama*** prepared for Thiokol Corporation, November.

Johnson, P.C. and R.A. Ettinger, 1991, "Heuristic Model for Predicting the Intrusion Rate of Contaminant Vapors in Buildings," ***Environ. Sci. Technol.,*** 25: 1445-1452.

Pacific Northwest National Laboratory, 2012, ***Visual Sample Plan***, U.S. Department of Energy, Release Version 6.2d.

Shaw Environmental, Inc. (Shaw), 2013a, ***RCRA Facility Investigation Report, RSA-204, Oxidizer Facility, Building 7691, Operable Unit 10, Redstone Arsenal, Madison County, Alabama***, November.

Shaw Environmental & Infrastructure, Inc. (Shaw), 2013b, ***Installation-Wide Quality Assurance Program Plan for the Program Management Contract, Revision 2, U.S. Army Garrison, Redstone, Madison County, Alabama***, May.

Shaw Environmental, Inc. (Shaw), 2010a, ***Installation-Wide Work Plan, Final Appendices B, C, D, E, F, Redstone Arsenal, Madison County, Alabama***, September.

Shaw Environmental, Inc. (Shaw), 2010b, ***Final Installation-Wide Strategy for Clean-up of Impacted Wetlands,*** U.S. Army Garrison-Redstone, Madison County, Alabama, Rev 1 May.

Shaw Environmental, Inc. (Shaw), 2009a, ***Installation-Wide Groundwater Land-Use Control Remedial Design, Redstone Arsenal, Madison County, Alabama***, prepared for U.S. Army Corps of Engineers, Savannah District, May.

Shaw Environmental, Inc. (Shaw), 2009b, ***Final Installation-Wide Groundwater Cleanup Strategy, Redstone Army Garrison, Madison County, Alabama***, prepared for U.S. Army Environmental Command, December.

Shaw Environmental, Inc. (Shaw), 2008, ***Final RSA-146 Phase I Remedial Investigation Report, Redstone Arsenal, Madison County, Alabama***, April.

Shaw Environmental, Inc. (Shaw), 2007, ***Final Interim Record of Decision, Interim Remedial Action for Installation-Wide Groundwater, Redstone Arsenal, Madison County, Alabama***, prepared for U.S. Army Corps of Engineers, Savannah District, September.

Shaw Environmental, Inc. (Shaw), 2005, ***Draft RSA-146 Potential Source Area Investigation, Redstone Arsenal, Madison County, Alabama***, prepared for the U.S. Army Corps of Engineers, Savannah District, Savannah, Georgia, January.

Tan, K., T.A. Anderson, and W.A. Jackson, 2004, "Degradation Kinetics of Perchlorate in Sediments and Soils," ***Water, Air, and Soil Pollution***, 151: 245–59

U.S. Army Garrison-Redstone (Army), 2012, ***Redstone Arsenal Environmental Site Access Control Program, Redstone Arsenal Regulation 200-7***, September.

U.S. Department of Defense (DoD), 2012, ***Defense Environmental Restoration Program (DERP) Management***, DoDM 4715.20, March.

U.S. Environmental Protection Agency (EPA), 2009, ***Statistical Analysis of Groundwater Monitoring Data at RCRA Facilities: Unified Guidance***, EPA/530/R-09/007, Office of Resource Conservation and Recovery Program Implementation and Information Division, March.

U.S. Environmental Protection Agency (EPA), 2008, ***Contract Laboratory Program National Functional Guidelines for Organic Data Review***, EPA-540-R-08, June.

U.S. Environmental Protection Agency (EPA), 2002, ***OSWER Draft Guidance for Evaluating the Vapor Intrusion to Indoor Air Pathway from Groundwater and Soils (Subsurface Vapor Intrusion Guidance)***, EPA 530-D-02-004, November.

U.S. Environmental Protection Agency (EPA), 1992, ***Statistical Analysis of Groundwater Monitoring Data at RCRA Facilities, Addendum to Interim Guidance***, Office of Resource Conservation and Recovery, July.

U.S. Environmental Protection Agency (EPA), 1990, "National Oil and Hazardous Substances Pollution Contingency Plan," ***Federal Register*** 55(46): 8666-8865.

U.S. Environmental Protection Agency (EPA), 1989, ***Statistical Analysis of Ground-Water Monitoring Data at RCRA Facilities, Interim Final Guidance***, Office of Solid Waste, Waste Management Division, EPA/530/SW-89/026, July.

ATTACHMENT 1

LIST OF ABBREVIATIONS AND ACRONYMS

List of Abbreviations and Acronyms
Redstone Arsenal, Madison County, Alabama

Acronym	Definition
µg/g	micrograms per gram
µg/kg	micrograms per kilogram
µg/L	micrograms per liter
µmhos/cm	micromhos per centimeter
µS/cm	microsiemens per centimeter
$\mu g/m^3$	micrograms per cubic meter
ºC	degrees Celsius
ºF	degrees Fahrenheit
%D	percent difference
%R	percent recovery
1,1,2-TCA	1,1,2-trichloroethane
1,1-DCE	1,1-dichloroethene
1,2-DCE	1,2-Dichloroethene
2,4,5-T	2,4,5-trichlorophenoxyacetic acid
2,4,5-TP	2,4,5-trichlorophenoxypropionic acid
2,4-D	2,4-dichlorophenoxyacetic acid
2-ADNT	2-amino-4,6-dinitrotoluene
4-ADNT	4-amino-2,6-dinitrotoluene
AAC	Alabama Administrative Code
AAFES	Army and Air Force Exchange Service
AAP	Army Ammunition Plant
AB	ambient blank
ABLM	adult blood lead model
ABP	agent breakdown products
ABS	dermal absorption factor
ACAD	AutoCadd
ACGIH	American Conference of Governmental Industrial Hygienists
ACM	asbestos-containing material
ACSIM	Assistant Chief of Staff for Installation Management
ADAF	age-determined adjustment factor
ADEM	Alabama Department of Environmental Management
ADPH	Alabama Department of Public Health
AEC	U.S. Army Environmental Command
AEDA	ammunition, explosives, and other dangerous articles
AEDB	Army Environmental Database
AEIRG	Alabama Environmental Investigation and Remediation Guidance
AEL	airborne exposure limit
AET	apparent effects threshold
AF	soil-to-skin adherence factor
AGS	Alabama Geographic Society
AHA	ammunition holding area
AHWMMA	Alabama Hazardous Wastes Management and Minimization Act
AIPH	Army Institute of U.S. Public Health
AL	Alabama
ALDOT	Alabama Department of Transportation
ALNHP	Alabama Natural Heritage Program
amb.	amber
amsl	above mean sea level (1988 North American Vertical Datum, NAVD 88)
ANOVA	Analysis of Variance
AOC	area of concern
AOI	area of investigation
AP	armor piercing
APEC	areas of potential ecological concern
APHC	U.S. Army Public Health Center
APT	armor-piercing tracer
AR	Army Regulation
AR/COC	analysis request/chain of custody
ARAR	applicable or relevant and appropriate requirement
ARBCA	Alabama Risk-Based Corrective Action
AREE	area requiring environmental evaluation
ARFO	ammunition returned from overseas
Army	U.S. Army
AS	air sparging
ASCII	American Standard Code for Information Interchange
ASP	Ammunition Supply Point
ASR	archives search report
AST	aboveground storage tank
ASTM	American Society for Testing and Materials
ASV	alternative screening value
ASWCC	Alabama Soil and Water Conservation Committee
AT	averaging time
ATF	Bureau of Alcohol, Tobacco, Firearms and Explosives
$atm\text{-}m^3/mol$	atmospheres per cubic meter per mole
ATSDR	Agency for Toxic Substances and Disease Registry
ATTN	attention
ATV	all-terrain vehicle
AUF	area use factor

List of Abbreviations and Acronyms
Redstone Arsenal, Madison County, Alabama

Acronym	Definition
AWARE	Associated Water and Air Resources Engineers, Inc.
AWBC	alternative water balance cover
AWQC	ambient water quality criteria
AWQS	ambient water quality standard
B	Analyte detected in laboratory or field blank at concentration greater than the reporting limit (and greater than zero)
BAF	bioaccumulation factor
$BAF_{soil\text{-}to\text{-}invert}$	soil-to-invertebrate bioaccumulation factor
BaOH	barium hydroxide
BAP	benzo(a)pyrene
BCF	bioconcentration factor
BCT	BRAC Cleanup Team
BDCM	bromodichloromethane
BEHP	bis(2-ethylhexyl)phthalate
BEM	Buried Explosion Module
BERA	baseline ecological risk assessment
BFB	bromofluorobenzene
BFE	base flood elevation
BFM	bonded fiber matrix
BG	Bacillus globigii
bgs	below ground surface
Bhate	Bhate Environmental Associates, Inc.
BHC	hexachlorocyclohexane
BHHRA	baseline human health risk assessment
BIM	basic information map
BIP	blow(n)-in-place
bkg	background
bls	below land surface
BMP	best management practice
BOD	biological oxygen demand
Bp	soil-to-plant biotransfer factors
BR	bedrock
BR-D	deep bedrock
BRAC	Base Realignment and Closure
BSAF	biota-to-sediment accumulation factors
BSC	background screening criterion
BSCRN	bottom of screen
BSV	background screening value
BTAG	Biological Technical Assistance Group
BTEX	benzene, toluene, ethyl benzene, and xylenes
BTOC	below top of casing
BTV	background threshold value
BW	body weight
BZ	breathing zone
C	ceiling limit value
C&D	Construction & Demolition
Ca	carcinogen
CA	chemical agent; corrective action
CAA	Clean Air Act
CAB	chemical warfare agent breakdown products
CACM	Chemical Agent Contaminated Media
$CaCO_3$	calcium carbonate
CAIS	chemical agent identification set
CalEPA	California Environmental Protection Agency
CAMU	corrective action management unit
CAP	corrective action plan; Contractor Acquired Property
CAR	corrective action request
CARA	corrective action request
CARA	Chemical, Biological, Radiological, Nuclear, and High-Yield Explosives (CBRNE) Analytical and Remediation Activity
CAS	Chemical Abstracts Service
CASNO	Chemical Abstract Service identification number
CASRN	Chemical Abstracts Service Registry Number
CB	chlorobenzene
CB&I	CB&I Federal Services LLC
CBFM	collodial borescope flowmeter
CBMPP	construction best management practices plan
CBR	chemical, biological, and radiological
CBRN	chemical, biological, radiological, nuclear
CBRNE	Chemical, Biological, Radiological, Nuclear, and High-Yield Explosives
CBZ	chlorobenzene
CCAL	continuing calibration
CCB	continuing calibration blank
CCC	criterion continuous concentration
CCl_4	carbon tetrachloride
CCV	continuing calibration verification
CD	compact disk; Consent Decree
CDI	chronic daily intake
CDTF	Chemical Defense Training Facility

List of Abbreviations and Acronyms
Redstone Arsenal, Madison County, Alabama

Acronym	Definition
CEHNC	U.S. Army Engineering and Support Center, Huntsville
CERCLA	Comprehensive Environmental Response, Compensation, and Liability Act
CERFA	Community Environmental Response Facilitation Act
CESAS	Corps of Engineers South Atlantic Savannah
CF	conversion factor
CFC	chlorofluorocarbon
CFDP	Center for Domestic Preparedness
CFR	Code of Federal Regulations
cfs	cubic feet per second
C_{fw}	contaminant concentration in fish from surface water
CG	phosgene (carbonyl chloride); cleanup goal
CGI	combustible gas indicator
ch	inorganic clays of high plasticity
CHPPM	U.S. Army Center for Health Promotion and Preventive Medicine
CIH	Certified Industrial Hygienist
cis-1,2-DCE	cis-1,2-Dichloroethene
CK	cyanogen chloride
Cl	chloride, chlorinated
CLIN	contract line item number
ClO_4^-	perchlorate
CLP	Contract Laboratory Program
CLPILM	EPA CLP's prefix designation for the inorganic metals analysis statement of work
CLP M	EPA CLP's prefix designation for the mercury analysis statement of work
CM	corrective measure
cm	centimeter
cm/hour	centimeters per hour
cm^2	cubic centimeter
cm^2/second	square centimeters per second
cm^3/g	cubic centimeters per gram
CMA	U.S. Army Chemical Materials Activity; corrective measure alternative
CMC	criterion maximum concentration
CMD	corrective measures design
CMI	corrective measures implementation
CMIP	corrective measures implementation work plan
CMO	corrective measure objective
CMS	corrective measures study
CMT	Continuous Multichannel Tubing
CN	chloroacetophenone
CNB	chloroacetophenone, benzene, and carbon tetrachloride
CNS	chloroacetophenone, chloropicrin, and chloroform
CO	carbon monoxide
CO_2	carbon dioxide
Co-60	cobalt-60
CoA	Code of Alabama
COAC	chemical of analytical concern
COC	when discussing chemicals, COC means chemical of concern; when discussing field paperwork, COC means chain of custody
COE	Corps of Engineers
COI	constituent of interest
Con	skin or eye contact
COPAC	chemical of potential analytical concern
COPC	chemical of potential concern
COPEC	chemical of potential ecological concern
COR	Contracting Officer's Representative
CP	communication plan; Competent Person
CPOM	coarse particulate organic matter
CPSS	chemicals present in site samples
CPVC	chlorinated polyvinyl chloride
C_{pw}	chemical of potential ecological concern concentration in pore water
CQA	construction quality assurance
CQAP	construction quality assurance plan
CRA	Conestoga-Rovers and Associates
CRDL	contract-required detection limit
CRL	certified reporting limit
CRP	community relations plan; compliance-related program
CRQL	contract-required quantitation limit
CRSA	Central Redstone Arsenal
CRZ	contamination reduction zone
CS	ortho-chlorobenzylidene-malononitrile
CSA	confirmation sampling activities
C_{sed}	chemical of potential ecological concern concentration in sediment from groundwater
CSEM	conceptual site exposure model
CSM	conceptual site model
CSP	chemical site plan
CSP	corrugated steel pipe
CSS	chemical safety submission
CT	carbon tetrachloride
CTC	cost to completion

List of Abbreviations and Acronyms
Redstone Arsenal, Madison County, Alabama

Acronym	Definition
ctr.	container
CVAA	2-chlorovinylarsenous acid
C_w	contaminant concentration in water
CWA	when discussing chemicals, CWA means chemical warfare agent; when discussing laws, CWA means Clean Water Act
CWM	If used in the text of a document this acronym means chemical warfare materiel; if used in an analytical table which summarizes container requirements, this acronym means clear, widemouth container
CWS	Chemical Warfare Service
CX	dichloroformoxime
D	duplicate; duplicate contamination; when used as a validation qualifier, D means dilution
D2PC	Personal Computer Program for Chemical Hazard Prediction
DAD	average dermally absorbed dose
DAVS	detector-aided visual survey
D&I	detection and identification
DA	Department of the Army
DA PAM	Department of the Army Pamphlet
DAAMS	Depot Area Air Monitoring System
DA_{event}	dermal dose absorbed per event
DAF	dilution-attenuation factor
DAF4	dilution-attenuation factor 4
DANC	decontamination agent, non-corrosive
DAP	diammonium phosphate
DASAF	Department of the Army Safety Office
DAVS	detector-aided visual survey
DBA	dibenz(a,h)anthracene
DBCP	1,2-dibromo-3-chloropropane
DC	District of Columbia
DCA	dichloroethane
DCB	decachlorobiphenyl
DCE	dichloroethene
DCMA	Defense Contract Management Agency
DCQAP	data collection quality assurance plan
DD	Decision Document
DD	Department of Defense (form only)
DDD	dichlorodiphenyldichloroethane (this is an industry standard acronym for this chemical)
DDE	dichlorodiphenyldichloroethene (this is an industry standard acronym for this chemical)
DDESB	Department of Defense Explosives Safety Board
DDT	dichlorodiphenyltrichloroethane
DEH	Directorate of Engineering and Housing
DEHP	bis(2-ethylhexyl)phthalate
DEMIL	Demilitarization Areas
DEP	depositional soil
DERP	Defense Environmental Restoration Program
DES	Directorate of Environment and Safety
DF	dilution factor
DFTPP	decafluorotriphenylphosphine
DFOW	Definable Feature of Work
DGM	digital geophysical mapping
DHC	*Dehalococcoides* sp.
DI	deionized
DID	data item description
DIMP	di-isopropylmethylphosphonate
DL	detection limit
DM	adamsite
DMBA	dimethylbenz(a)anthracene
DMM	discarded military munitions
DMMP	dimethylmethylphosphonate
DNAPL	dense nonaqueous-phase liquid
DNB	dinitrobenzene
DNBZ	dinitrobenzene
DNOC	4,6-dinitro-2-methylphenol
DNT	dinitrotoluene
DO	dissolved oxygen
DoD	U.S. Department of Defense
DODI	Department of Defense Instruction
DOJ	U.S. Department of Justice
DOT	U.S. Department of Transportation
DP	direct-push
DPDO	Defense Property Disposal Office
DPT	direct-push technology
DQCR	Daily Quality Control Report
DQO	data quality objective
DRMO	Defense Reutilization and Marketing Office
DRO	diesel range organics
DS	deep (subsurface) soil
DS2	Decontamination Solution Number 2
DSERTS	Defense Site Environmental Restoration Tracking System
DSMOA	Defense and State Memorandum of Agreement
DSN	Defense Switched Network
DTSC	Department of Toxic Substances Control
DU	decision unit
DUA	data usability assessment

List of Abbreviations and Acronyms
Redstone Arsenal, Madison County, Alabama

Acronym	Definition
DVD	digital versatile disc or digital video disc
DWEL	drinking water equivalent level
e.g.	for example
E3	Electromagnetic Environmental Effects
EB	equipment blank
EBS	environmental baseline study
EC_{20}	effects concentration for 20 percent of a test population
EC_{50}	effects concentration for 50 percent of a test population
ECBC	Edgewood Chemical and Biological Center
Eco-RGRG	ecological risk-based remedial goal
Eco-SSL	ecological soil screening level
ECM	earth covered magazine
ED	exposure duration
EDD	electronic data deliverable
EDQL	ecological data quality level
EDTA	ethylenediaminetetracetic acid
EE/CA	engineering evaluation and cost analysis
EF	exposure frequency
EFR	enhanced fluid recovery
Eh	oxidation-reduction potential
ELAP	Environmental Laboratory Accreditation Program
Elev.	elevation
EM(1)	electromagnetic
EM(2)	Engineer Manual
EM31	Geonics Limited EM31 Terrain Conductivity Meter
EM61	Geonics Limited EM61 High-Resolution Metal Detector
EMI	electromagnetic induction
Empirical	Empirical Laboratories, LLC
EMSI/EL	Environmental Management Services, Inc./Environmental Laboratories
EMT	emergency medical technician
EOC	Emergency Operation Center
EOD	explosive ordnance disposal
EODT	explosive ordnance disposal team; EOD Technology, Inc.
EP	exit pathway
EPA	U.S. Environmental Protection Agency
EPC	exposure point concentration
EPDS	Emergency Personnel Decontamination Station
EPIC	Environmental Photographic Interpretation Center
EPP	Environmental Protection Plan
EPRI	Electrical Power Research Institute
EPT	Ephemeroptera, Plecoptera, Trichoptera
EQ	EQ Environmental Quality Company
EQL	estimated quantitation limit
ER	equipment rinsate; USACE Engineer Regulation
ERA	ecological risk assessment
ERH	electrical resistive heating
ERIS	Environmental Restoration Information System
ER-L	effects range-low
ER-M	effects range-medium
ESA	ecologically sensitive area
ESB	Equilibrium Partitioning Sediment Benchmark
ESE	Environmental Science and Engineering, Inc.
ESL	ecological screening level
ESP	explosives site plan
ESMP	Endangered Species Management Plan; Explosives Safety Management Program
ESS	explosives safety submission
ESTCP	Environmental Security Technology Certification Program
ESV	ecological screening value
ET	exposure time
ET_{sw}	exposure time - surface water
EU	exposure unit
EUR	Environmental Use Restriction
EV	event frequency
E-W	east to west
Excel	Excel Geophysical Services
Exp.	Explosives
EXTOXNET	Extension Toxicology Network
Ey	Etowah silty clay loam
EZ	exclusion zone
FA	fraction absorbed
FAC	facultative wetland
FACU	facultative upland
FACW	facultative wetland
FADL	Field Activity Daily Log
FAR	Federal Acquisition Regulations
FAV	final acute value
FB	field blank
FBI	Family Biotic Index
FCSV	food chain screening value
FCV	final chronic value

List of Abbreviations and Acronyms
Redstone Arsenal, Madison County, Alabama

Acronym	Definition
FD	field duplicate
FDA	U.S. Food and Drug Administration
Fe^{+2}	ferrous iron
Fe^{+3}	ferric iron
FEC	fluid electrical conductivity
FedEx	Federal Express, Inc.
FEMA	Federal Emergency Management Agency
FFA	Federal Facilities Agreement
FFCA	Federal Facilities Compliance Act
FFE	field flame expedient
FFP	firm fixed price
FFS	focused feasibility study
FI	fraction of exposure; filtered
FID	flame ionization detector
FIFRA	Federal Insecticide, Fungicide, & Rodenticide Act
FLUTe	Flexible Liner Underground Technologies, Ltd. Co.
FM-ARNGTC	Fort McClellan Army National Guard Training Center
FMDC	Fort McClellan Development Commission
FML	flexible membrane liner
f_{oc}	fraction organic carbon
FOIA	Freedom Of Information Act
FOMRA	Former Ordnance Motor Repair Area
FOST	Finding of Suitability to Transfer
Foster Wheeler	Foster Wheeler Environmental Corporation
FR	Federal Register
Frtn	fraction
FS	feasibility study
FSH	Fort Sam Houston
FSP	field sampling plan
FS smoke	sulfur trioxide and chlorosulfonic acid
ft	foot, feet
ft/day	feet per day
ft/ft	feet per foot
ft/yr	feet per year
ft^2	square feet
ft^2/day	square feet per day
FTA	Fire Training Area
FUP	fixed unit price
FWV	fieldwork variance
FY	fiscal year
g	gram
G&M	Geraghty and Miller, Inc.
g/cm^3	grams per cubic centimeter
g/m^2	grams per square meter
g/m^3	gram per cubic meter
G-856	Geometrics, Inc. G-856 magnetometer
G-858G	Geometrics, Inc. G-858G magnetic gradiometer
GA	tabun
GAC	granular activated carbon
GAF	General Aniline and Film; gastrointestinal absorption factor
gal	gallon
gal/min	gallons per minute
GB	sarin (isopropyl methylphosphonofluoridate)
GC	gas chromatograph
GC/MS	gas chromatograph/mass spectrometer
GCL	geosynthetic clay liner
GCMR	Geophysical Classification for Munitions Response
GCWD	Gulf Chemical Warfare Depot
GCWS	Gulf Chemical Warfare Service
GEAE	Generic Ecological Assessment Endpoint
GEDIT	gaseous electron donor injection technology
GFAA	graphite furnace atomic absorption
GIP	geophysical investigation plan
GIS	geographic information system
GNSS	Global Navigation Satellite System
GPCR	gas phase chemical reduction
gpm	gallons per minute
GPR	ground-penetrating radar
GPS	global positioning system
GRA	general response action
GRIM	Groundwater Responsibility Information Matrix
GRO	gasoline range organics
GS	ground scar
GSA	when discusing the federal government requirements, GSA means General Services Administration; when discussing geology, GSA means Geologic Survey of Alabama
GSE	Great Southern Engineering
GSR	green and sustainable remediation
GST	ground stain
GSV	geophysical systems verification
GUC	groundwater use control

List of Abbreviations and Acronyms
Redstone Arsenal, Madison County, Alabama

Acronym	Definition
GW	groundwater
GWDT	Groundwater Design Team
GWMZ	groundwater monitoring well, multizone
GWTR	groundwater monitoring well
H&S	health and safety
H_2O_2	hydrogen peroxide
H_2S	hydrogen sulfide
HA	hand auger; hazard assessment
HAL	Health Advisory level
HAMUST56	Huntsville Arsenal Mustard Plant 2, Lines 5 & 6
Harmon	Harmon Engineering Associates, Inc.
HAZMATCAD™	Hazardous Material Chemical Agent Detector
HAZWOPER	Hazardous Waste Operations and Emergency Response
HBESL	health-based environmental screening level
HC	mixture of hexachloroethane, aluminum powder, and zinc oxide (smoke producer)
HCl	hydrochloric acid
HD	distilled mustard (bis-[dichloroethyl]sulfide); hazard division
HDPE	high-density polyethylene
HE	high explosive
HEAST	Health Effects Assessment Summary Tables
HEAT	High Explosive Anti-Tank
Herb.	herbicides
HFD	hazardous fragment distance
HHAWQS	human health Alabama water quality standard
HHRA	human health risk assessment
HHRE	human health risk evaluation
HI	hazard index
HI_{COC}	total hazard index for a given relevant COC, for a given receptor added across all exposure routes for given source medium
Hi_{cum}	cumulative hazard index summed across chemicals and source media
HI_{TO}	total hazard index for a given target organ for a given receptor
Hm	hot measurement
HMW	high molecular weight
HMX	cyclotetramethylenetetranitramine; octahydro-1,3,5,7-tetranitro-1,3,5,7-tetrazocane
HN	hydrogen mustard
HNC	hydrogen cyanide
HNO_3	nitric acid
HP	hydropunch
HPLC	high-performance liquid chromatography
HQ	hazard quotient
HQ_{COCi}	hazard quotient for the target organ of interest estimated for the ith COC
$'HQ_i$	hazard index for a given chemical summed across exposure routes and source media
$'HQ_{Ri}$	hazard quotient for the given chemical for exposure route i
HQ_{screen}	screening-level hazard quotient
hr	hour
HRR	Historical Records Review
HS	mustard
HSA	hollow-stem auger
HSB	Huntsville Spring Branch
HSDB	Hazardous Substances Data Bank
HSMR	Huntsville Spring Branch at Martin Road
HT	British Mustard
HTPB	hydroxy-terminated polybutadiene
HTRW	hazardous, toxic, and radioactive waste
HTW	hazardous and toxic waste
HUB	Historically Underutilized Business
HWCL	hazardous waste control limit
HWSU	hazardous waste storage unit
HY	hydrostratigraphic unit
HYPN	hydropunch
Hz	hertz
I	out of control, data rejected due to low recovery
I-565	Interstate 565
IAP	Installation Action Plan
IATA	International Air Transport Authority
I-AVSS	instrument-aided visual surface sweep
ICAL	initial calibration
ICAM	improved chemical agent monitor
ICB	initial calibration blank
ICP	inductively coupled plasma
ICS	interference check sample
ICV	initial calibration verification
ID	identification; inside diameter
IDL	instrument detection limit
IDLH	immediately dangerous to life or health
IDM	investigative-derived media
IDQTF	Intergovernmental Data Quality Task Force
IDS	intrusion detection system
IDW	investigation-derived waste; investigative-derived waste

List of Abbreviations and Acronyms
Redstone Arsenal, Madison County, Alabama

Acronym	Definition
i.e.	that is (in other words)
IELCR	individual excess lifetime cancer risk
$IELCR_{coc}$	total individual excess lifetime cancer risk for a given relevant chemical of concern, for a given receptor added across all exposure routes for a
'$IELCR_{Cum}$	cumulative cancer risk for a given receptor summed across chemicals and source media
'$IELCR_{Ri}$	cancer risk for the given chemical in a given source medium for exposure route i
'$IELCR_{T}$	total cancer risk for the given chemical in a given source medium summed across exposure routes
$IELCR_{(Ti)}$	total cancer risk for chemical i in a given source medium summed across exposure routes
IEOC	Installation Emergency Operations Center
IEUBK	Integrated Exposure Uptake Biokinetic
IF	ingestion factor; inhalation factor
IIP	intrusive investigation plan
ILCR	incremental lifetime cancer risk
ILM	EPA CLP's prefix designation for the inorganic metals analysis statement of work for EPA contract laboratory program
IM	interim measure; isobutyl methacrylate
IMU	inertial measurement unit
IM-AE	isobutyl methacrylate polymer AE
IMPA	isopropylmethyl phosphonic acid
in.	inch
Inc.	Incorporated
Ing	ingestion
Inh	inhalation
INT	interface
IOU	integrator operable unit
IP	ionization potential
IPS	International Pipe Standard
IR	ingestion rate
IRAO	interim remedial action objective
IRDMIS	Installation Restoration Data Management Information System
IR_f	fish ingestion rate
'IR_{sw}	ingestion rate
IRFNA	inhibited red fuming nitric acid
IRIS	Integrated Risk Information System
IROD	interim record of decision
IRP	Installation Restoration Program
IRSL	industrial regional screening level
IS	incremental sampling
ISAB	in situ anaerobic bioremediation
ISBN	International Standard Book Number
ISL	initial screening level
ISO	industry standard object
ISTD	in situ thermal destruction
ISTT	in situ thermal treatment
IT	IT Corporation
ITEMS	IT Environmental Management System™
ITRC	Interstate Technology and Regulatory Council
IV	intervention value
IVS	instrument verification strip
IW	installation-wide
IWGW	installation-wide groundwater
IWWP	installation-wide work plan
J	estimated concentration
J&E	Johnson and Ettinger
JD	jurisdictional determination
JOR	job order request
K	conductivity
KAPSDIDS	Kinetically Adjustable Pore Spaace Dilation Injection Delivery System
K_d	soil-water distribution coefficient
Kd_{bs}	bed sediment-sediment pore water partition coefficient
KeV	kilo electron volt
kg	kilogram
kg/m^3	kilograms per cubic meter
$KMnO_4$	potassium permanganate
KO	Contracting Officer
K_p	permeability coefficient
K_{oc}	organic carbon partioning coefficient
K_{ow}	octanol-water partition coefficient
kVA	kilovolt-ampere
L	if used as part of the units of measure, the acronym stands for "liter", if used as a chemical name, this acronym stands for lewisite
L/cm^3	liters per cubic centimeter
L/day	liters per day
L/kg/day	liters per kilogram per day
LANL	Los Alamos National Laboratory
lb	pound
LBP	lead-based paint
lbs/year	pounds per year
LC	liquid chromatography

List of Abbreviations and Acronyms
Redstone Arsenal, Madison County, Alabama

Acronym	Definition
LC_{50}	lethal concentration for 50 percent population tested
LCS	laboratory control sample
LCSD	laboratory control sample duplicate
LD_{50}	lethal dose for 50 percent population tested
LDD	lost, damage, or destruction
LEL	lower explosive limit
LF	Leaching Factor
LiDAR	Light Detection and Ranging
LL	low level
LLC	limited liability company
LNAPL	light nonaqueous-phase liquid
LOAEL	lowest-observed-adverse-effects level
LOD	limit of detection
LOEC	lowest-observable-effect-concentration
LOQ	limit of quantitation
LSA	limited site assessment
LSV	leachate screening value
LTM	long-term management
LTV	leachate threshold value
LUC	land-use control
LUCAP	land-use control assurance plan
LUCER	land-use control effectiveness report
LUCIP	land-use control implementation plan
m	meter
m/year	meters per year
m/yr	meters per year
m/second	meters per second
m^3/hour	cubic meters per hour
m^3/kg	cubic meters per kilogram
MACOM	Major Command
MADEP	Massachusetts Department of Environmental Protection
MARB	Munitions Assessment Review Board
max	maximum
MB	method blank
MC	munitions constituents
MCDZ	McDonald Creek discharge zone
MCE	Maximum Credible Event
MCL	maximum contaminant level
MCLG	maximum contaminant level goal
MCPA	4-chloro-2-methylphenoxyacetic acid
MCPP	2-(2-methyl-4-chlorophenoxy)propionic acid
MCS	media cleanup standard
MD	munitions debris; Mahalanobis Distance
MDAS	Material Documented as Safe
MDC	maximum detected concentration
MDCC	maximum detected constituent concentration
MDEH	Material Documented as an Explosive Hazard
MDL	method detection limit
MEC	munitions and explosives of concern
MEE	methane, ethane, and ethene
MEP	Multiple Extraction Procedure
MeV	mega electron volt
Mfp	Mississippian Fort Payne
mg	milligrams
mg/cm^2	milligrams per square centimeter
mg/cm^2/day	milligrams per square centimeter per day
mg/cm^2/event	milligrams per square centimeter per event
mg/day	milligrams per day
mg/kg	milligrams per kilogram
mg/kg-day	milligram per kilogram per day
mg/kgbw/day	milligrams per kilogram of body weight per day
mg/L	milligrams per liter
mg/m^3	milligrams per cubic meter
mgal	million gallons
MGFD	munition with the greatest fragmentation distance
mh	inorganic silts, micaceous or diatomaceous fine, sandy or silt soils
MHz	megahertz
MI	multi-incremental
MICC	Mission & Installation Contracting Command
min	minimum
MINICAMS	miniature continuous air monitoring system
MIS	Management Information System
mL	milliliter
mm	millimeter
MMAS	Mobile Munitions Assessment Systems
MMBtu/hr	million Btu per hour
MMCS	Missile and Munitions Command School
MM-CX	Military Munitions Center of Expertise
MMRP	Military Munitions Response Program

List of Abbreviations and Acronyms
Redstone Arsenal, Madison County, Alabama

Acronym	Definition
Mn^{+4}	manganese
MNA	monitored natural attenuation
MnO_4^-	permanganate ion
MNR	monitored natural recovery
MOA	Memorandum of Agreement
MOCA	4,4-methylene-bis(2-chloroaniline)
MOGAS	motor vehicle gasoline
MOUT	Military Operations in Urban Terrain
MP	Military Police
MPA	methyl phosphonic acid
MPC	maximum permissible concentration; measurement performance criteria
MPM	most probable munition
MPPEH	Material Potentially Presenting an Explosive Hazard
MPR	4.2-Inch Mortar Proofing Range
MQL	method quantitation limit
MQO	measurement quality objective
MR	molasses residue; munitions response
MRA	munitions response area
MRC	multiple round container
MRL	method reporting limit
MRL	minimal risk level
MRR	Materials Receiving Report
MRS	Munitions Response Site
MS	matrix spike
mS/cm	millisiemens per centimeter
mS/m	millisiemens per meter
MS/MSD	matrix spike/matrix spike duplicate
MSD	when discussing laboratory QC, MSD means matrix spike duplicate; when discussing explosives, MSD means minimum separation distance
MSFC	George C. Marshall Space Flight Center
msl	mean sea level
Mt	Mississippian Tuscumbia Limestone
MTBE	methyl tertiary butyl ether
M&TE	measurement and test equipment
mV	millivolts
MW	monitoring well
Na	sodium
N/A	not applicable
NA	not applicable
NAD	North American Datum
NAD83	North American Datum of 1983
$NaMnO_4$	sodium permanganate
NAPL	nonaqueous-phase liquid
NAS	National Academy of Sciences
NASA	National Aeronautics and Space Administration
NAVD 88	North American Vertical Datum, 1988 adjustment
NAVD88	North American Vertical Datum of 1988
NB	nitrobenzene
NBA	Northern Burial Area
NCEA	National Center for Environmental Assessment
NCP	National Contingency Plan
NCR	nonconformance report
NCRP	National Council on Radiation Protection and Measurements
ND	not detected
NDA	Northern Disposal Area
NDMA	n-nitrosodimethylamine
NDPA	n-nitroso-di-n-propylamine
NE	northeast
NELAP	National Environmental Laboratory Accreditation Program
NEPA	National Environmental Protection Act
NEW	net explosive weight
NFA	no further action
NFG	National Functional Guidelines
NFPA	National Fire Protection Agency
NG	National Guard
ng/L	nanograms per liter
NGB	National Guard Bureau
NGP	National Guardsperson
NGVD	National Geodetic Vertical Datum
Ni	nickel
NIC	notice of intended change
NIOSH	National Institute for Occupational Safety and Health
NIST	National Institute of Standards and Technology
NJDEP	New Jersey Department of Protection
NLM	National Library of Medicine
NLT	no later than
NMEA	National Marine Electronics Association
No.	number
NO_3^-	nitrate
NOAA	National Oceanic and Atmospheric Administration

List of Abbreviations and Acronyms
Redstone Arsenal, Madison County, Alabama

Acronym	Definition
NOAEL	no-observed-adverse-effects level
NOEC	no-observable-effect concentration
NONEL	non-electric
NP	nitropropyl
NPDES	National Pollutant Discharge Elimination System
NPL	National Priorities List
NPW	net present worth
NR	not requested
NRC	National Research Council
NRCC	National Research Council of Canada
NRHP	National Register of Historic Places
NRL	Naval Research Laboratory
NRT	near real time
ns	nanosecond
NS	not surveyed
N-S	north to south
NSA	New South Associates, Inc.
NT	nitrotoluene
nT	nanotesla
nT/m	nanoteslas per meter
NTCRA	Non-Time Critical Removal Action
NTIS	National Technical Information Service
NTU	nephelometric turbidity unit
nv	not validated
NY DOH	New York State Department of Health
O&G	oil and grease
O&M	operation and maintenance
O_2	oxygen
O_3	ozone
OB/OD	open burn/open detonation
OBL	obligate
OCDD	octachlorodibenzo-p-dioxin
OD	outside diameter; other (nonmunitions) debris
OE	ordnance and explosives
OEC	Ordnance Explosives Center
OEHHA	Office of Environmental Health Hazard Assessment (of the California Environmental Protection Agency)
OESS	Ordnance and Explosives Safety Specialist
OGMS	Ordnance Guided Missile School
oh	organic clays of medium to high plasticity
OH·	hydroxyl radical
ol	organic silts and organic silty clays of low plasticity
OMEMS	Ordnance Munitions and Electronic Maintenance School
OP	organophosphorus; organochlorine pesticide
ORA	Operational Range Assessment
ORAP	Operational Range Assessment Program
Ord	Ordovician
ORP	oxidation-reduction potential
OSA	Open Storage Area
OSD	overage/shortage/damage
OSHA	Occupational Safety and Health Administration
OSWER	Office of Solid Waste and Emergency Response
OU	operable unit
OVA	organic vapor analyzer
OVB	overburden
OVB-S	shallow overburden
OVM	organic vapor monitoring
OVM-PID/FID	organic vapor meter-photoionization detector/flame ionization detector
OWS	oil/water separator
oz	ounce
P&T	pump and treat
PA	preliminary assessment
PA3	Plant Area 3, Incendiaries Manufacturing
PAED	Public Access Exclusion Distance
PAH	polynuclear aromatic hydrocarbon
PAL	preliminary action level
PARCCS	precision, accuracy, representativeness, comparability, completeness, and sensitivity
Parsons	Parsons Engineering Science, Inc.
Pb	lead
PBAA	polybutadiene acrylic acid
PBAN	polybutadiene/acrylic acid/acrylonitrile
PBC	performance-based contract
PBMS	performance-based measurement system
PC	permeability coefficient
PCA	tetrachloroethane
PCB	polychlorinated biphenyl
PCDD	polychlorinated dibenzo-p-dioxins
PCDF	polychlorinated dibenzofurans
PCE	tetrachloroethene
PCMIA	Personal Computer Memory Card International Association
PCP	pentachlorophenol

List of Abbreviations and Acronyms
Redstone Arsenal, Madison County, Alabama

Acronym	Definition
PCR	polymerase chain reaction
PDA	Personal Digital Assistant
PDB	polyethylene diffusive bag sampler
PDF	Portable Document Format
PDS	Personnel Decontamination System
PDT	Project Delivery Team
PEC	probable effect concentration
PEF	particulate emission factor
PEL	permissible exposure limit
PELA	P.E. LaMoreaux and Associates, Inc.
PERA	preliminary ecological risk assessment
PERC	perchloroethene
PES	potential explosive site
Pest.	pesticides
PETN	pentaerythritol tetranitrate
PFO	palustrine forested wetland
PFT	portable flamethrower
PG	professional geologist
pg/g	picograms per gram
PgM	program manager
pH	measure of acidity/alkalinity; hydrogen ion activity (negative of the logarithm, base 10)
PID	photoionization detector
PIEZ	piezometer
PINS	portable isotopic neutron microscopy
PK	packer
PLS	Professional Land Surveyor
PLS	Professional (licensed) Land Surveyor
PM	project manager
PMC	Program Management Contract
PNMSCM	Product Manager for Non-Stockpile Chemical Materiel
PMP	Project Management Plan
PMTP	Program Management Team Plan
POC	point of contact
POL	petroleum, oils, and lubricants
POTW	publicly owned treatment works
POW	prisoner of war; palustrine open water
Powell	John Powell Chemical Company
PP	Proposed Plan
ppb	parts per billion
ppbv	parts per billion by volume
PPE	personal protective equipment
ppm	parts per million
PPMP	Print Plant Motor Pool
PPRTV	provisional peer-reviewed toxicity values
ppt	parts per trillion
ppT	parts per thousand
PQL	practical quantitation limit
PR	potential risk
PRA	preliminary risk assessment
PRE	preliminary risk evaluation
PRG	preliminary remediation goal
PRO	petroleum range organics
PS	chloropicrin
PSA	potential source area
PSL	preliminary screening level
PSS	palustrine scrub shrub
PSSC	potential site-specific chemical
PSV	preliminary screening value
pt	peat or other highly organic silts
PT1	an incendiary mixture in munitions
PTFE	Polytetrafluoroethylene (Teflon)
PTMP	program team management plan
PTSM	principal threat source material
PVC	polyvinyl chloride
PWS	performance work statement
PZ	piezometer
QA	quality assurance
QA/QC	quality assurance/quality control
QAM	quality assurance manual
QAO	quality assurance officer
QAPP	quality assurance project plan
QASAS	Quality Assurance Specialist Ammunition Surveillance
QASP	Quality Assurance Surveillance Plan
QC	quality control
QCP	quality control plan
QCSM	Quality Control Site Manager
QCSR	quality control summary report
Q-D	quantity-distance
QL	quantitation limit
QP	Qualified Person
Q-Q	quantile-quantile

List of Abbreviations and Acronyms
Redstone Arsenal, Madison County, Alabama

Acronym	Definition
QSAR	quantitative structure-activity relationship
QSM	quality systems manual
QST	QST Environmental, Inc.
qty	quantity
Qual	qualifier
QuickSilver	QuickSilver Analytics, Inc.
R	when used as a validation qualifier, R means rejected; when used as a lab qualifier, R means resample; when used in text, R means retardation factor
R&A	relevant and appropriate
R^2	coefficient of determination
RA	remedial action
RA(O)	remedial action (operations)
RAO	remedial action objective
RAP	recommended action plan
RAR	remedial action report
RARE	Redstone Arsenal Rocket Engine
RAWP	remedial action work plan
Raytheon	Raytheon Company
RBA	relative bioavailability
RBC	risk-based concentration
RBP	Rapid Bioassessment Protocol
RBRG	risk-based remedial goal
RBSC	risk-based screening concentration
$RBSC_I$	risk-based screening concentration for industrial soil
$RBSC_R$	risk-based screening concentration for residential soil
$RBSC_T$	risk-based screening concentration for tap water
RBTL	risk-based target level
$RBTL_{coc}$	risk-based target level for a given relevant COC, receptor, and source medium
RC	representative concentration; response complete
RC_{coc}	representative concentration of the relevant COC in the given medium
RCA	root cause analysis
RCRA	Resource Conservation and Recovery Act
RCRA CA	Resource Conservation and Recovery Act Corrective Action
RCWM	Recovered Chemical Warfare Materiel
RD	remedial design
RDECOM	U.S. Army Research, Development, and Engineering Command
RDX	hexahydro-1,3,5-trinitro-1,3,5-triazine; cyclotrimethylenetrinitramine; 1,3,5-trinitro-1,3,5-triazine (cyclonite); Royal Demolition Explosive
REG	regular field sample
REL	recommended exposure limit; reference exposure level
RER	Record of Environmental Review
Rev	Revision
RF	response factor
RFA	request for analysis
RfC	reference concentration
RfD	reference dose
RFI	RCRA facility investigation
RFQ	request for quotation
RG	remedial goal
RGO	remedial goal option
RI	remedial investigation
RIP	remedy in place
RL	reporting limit
RM	risk management
RM-1	Risk Management-1
RM-2	Risk Management 2
RME	reasonable maximum exposure
RMP	risk management plan
Ro	Robertsville silt loam
ROD	Record of Decision
ROF	report of findings
ROI	radius of influence
ROP	Redstone Ordnance Plant
ROPS	roll over protection system
RPD	relative percent difference
RR	range residue
RRF	relative response factor
RRSE	Relative Risk Site Evaluation
RRSL	residential regional screening level
RS	prefix for groundwater monitoring well at Redstone Arsenal
RSA	Redstone Arsenal
RSD	relative standard deviation
RSL	Regional Screening Level
RSP	Redstone Arsenal spring
RTAP	Real-Time Analytical Platform
RTC	Redstone Test Center
RTECS	Registry of Toxic Effects of Chemical Substances
RTK	real-time kinematic
RTS	robotic total station
RTTC	Redstone Technical Test Center

List of Abbreviations and Acronyms
Redstone Arsenal, Madison County, Alabama

Acronym	Definition
Rust	Rust Environment and Infrastructure, Inc.
s/n	signal-to-noise ratio
SA	exposed skin surface area; source area
SAA	satellite accumulation area
SAC	site access control
SACIMS	Site Access Control Information Management System
SACP	Site Access Control Plan
SAD	South Atlantic Division
SAE	Society of Automotive Engineers
SAIC	Science Applications International Corporation
SAP	sampling and analysis plan
SAR	structure-activity relationship
SARA	Superfund Amendments and Reauthorization Act
SB	soil boring
SC	specific conductance
SCG	storage compatibility group
SCBA	self-contained breathing apparatus
Sch.	schedule
SCM	site conceptual model
SD	sediment
SDG	sample delivery group
SDS	safety data sheet
SDSW	sediment/surface water
SDWA	Safe Drinking Water Act
SDZ	surface danger zone
SED	Software Engineering Directorate
SEE	steam enhanced extraction
SF	cancer slope factor
SFSP	site-specific field sampling plan
SGF	standard grade fuels
Shaw	Shaw Environmental, Inc.
SHP	safety and health plan
SI	site inspection
Sil	Silurian
SIM	Selective Ion Monitoring
SIR	secondary investigation report
SL	standing liquid
SLERA	screening-level ecological risk assessment
SM	sulfur monochloride
SMDP	Scientific Management Decision Point
SMF	smoke munitions filling
SMF 3	Smoke Munitions Filling Plant 3
SMP	site management plan
SNR	signal-to-noise ratio
SO_4	sulfate
SOD	soil oxidant demand
SOP	standard operating procedure
SOPP	standard operating project procedure
SP	submersible pump
SPA	single point anomaly
SPCC	system performance calibration compound
SPCS	State Plane Coordinate System
SPLP	synthetic precipitation leaching procedure
SPM	sample planning module
SPRG	spring
SQG	sediment quality guideline
SQRT	screening quick reference tables
SRA	streamlined human health risk assessment; saturated response area
SRB	sulfate-reducing bacteria
SRI	supplemental remedial investigation
SRM	standard reference material
SS	surface soil
SSC	site-specific chemical
SSHO	site safety and health officer
SSHP	site-specific safety and health plan
SSL	soil screening level
SSSL	site-specific screening level
SSTL	site-specific target level
SSPA	site-specific probability assessment
STB	supertropical bleach
STC	source-term concentration
STD	standard deviation
Std. units	standard units
STEL	short-term exposure limit
STP	sewage treatment plant
STL	Severn-Trent Laboratories
STT	sludge thickener tank
SU	sampling unit when used in a grid for incremental sampling; when used as a unit for pH, this acronym stands for standard unit
SUXOS	senior UXO supervisor
SV	screening value

List of Abbreviations and Acronyms
Redstone Arsenal, Madison County, Alabama

Acronym	Definition
SVE	soil vapor extraction
SVOC	semivolatile organic compound
SW-846	U.S. EPA's *Test Methods for Evaluating Solid Waste: Physical/Chemical Methods*
SW	surface water
SWCC	State of Alabama Soil and Water Conservation Committee
SWMU	solid waste management unit
SWTR	surface water
SZ	support zone
TA	test area
TAL	target analyte list
TAT	turn around time
TB	trip blank
TBC	to be considered
TBD	to be determined
TCA	trichloroethane
TCDD	2,3,7,8-tetrachlorodibenzo-p-dioxin
TCDF	tetrachlorodibenzofurans
TCE	trichloroethene
TCH	thermal conductive heating
TCL	target compound list
TCLP	toxicity characteristic leaching procedure
TCMX	tetrachloro-m-xylene
TCRA	time critical removal action
TDGCL	thiodiglycol
TDGCLA	thiodiglycol chloroacetic acid
TDS	total dissolved solids
TEA	triethylaluminum
TEC	threshold effect concentration
TeCA	1,1,2,2-tetrachloroethane
TEMP	temperature
TEMTADS	Time-Domain Electromagnetic Multisensor Tower Array Detection System
TEQ	toxic equivalency quotient
TERC	Total Environmental Restoration Contract
Tetryl	trinitrophenylmethylnitramine
TEU	Technical Escort Unit
THI	target hazard index
Thiokol	Thiokol Corporation
TIC	tentatively identified compound
TIR	thermal infrared survey
TLV	threshold limit value
TM	Technical Manual
TMP	temperature measuring point
TMPW	temporary groundwater monitoring well
TN	Tennessee
TNB	trinitrobenzene
TNT	trinitrotoluene
TO	task order
TOC	use top of casing when defining the well depth; use total organic carbon when defining a general chemistry parameter
TOI	target of interest
TOW	tube-launched, optically-tracked, wire-guided missile
TP	Technical Paper
TPH	total petroleum hydrocarbon
TPI	three-phase inspection
TPP	Technical Project Planning
TR	target cancer risk
TRADOC	U.S. Army Training and Doctrine Command
TRPH	total recoverable petroleum hydrocarbons
TRV	toxicity reference value
TSA	temporary storage area
TSCA	Toxic Substances Control Act
TSCRN	top of screen
TSDF	treatment, storage, and disposal facility
TSLC	target soil leachate concentration
TSS	total suspended solids
TTAP	treatment system tap (port)
TTZ	target treatment zone
Tu	Tupelo silt loam
TVA	Tennessee Valley Authority
TWA	time-weighted average
TXDOT	Texas Department of Transportation
TX-3	small rocket motor used for ballistics testing
U	not detected above reporting limit
U.S.	United States (of America)
UB	potential blank contamination
UCL	upper confidence limit
UCR	upper certified range
UDMH	unsymmetrical dimethyl hydrazine

List of Abbreviations and Acronyms
Redstone Arsenal, Madison County, Alabama

Acronym	Definition
UF	uncertainty factor
UFP	Uniform Federal Policy
UIC	underground injection control
UJ	not detected, estimated due to data validation anomaly
UNEP	United Nations Environment Program
UPL	upper prediction limit; upland
UR	not detected; rejected due to data validation anomaly
URF	unit risk factor
USACE	U.S. Army Corps of Engineers
USACMLS	U.S. Army Chemical School
USAEC	U.S. Army Environmental Command
USAEHA	U.S. Army Environmental Hygiene Agency
USAESCH	U.S. Army Engineering Support Center, Huntsville
USAMPS	U.S. Army Military Police School
USAPHC	U.S. Army Public Health Command
USATCES	U.S. Army Technical Center for Explosive Safety
USATEU	U.S. Army Technical Escort Unit
USATHAMA	U.S. Army Toxic and Hazardous Material Agency
USC	United States Code
USCS	Unified Soil Classification System
USDA	U.S. Department of Agriculture
USEPA	U.S. Environmental Protection Agency
USFWS	U.S. Fish and Wildlife Service
USGS	U.S. Geological Survey
UST	underground storage tank
UTL	upper tolerance limit
UTM	Universal Transverse Mercatir
UTV	utility terrain vehicle
UXO	unexploded ordnance
UXOSP	unexploded ordnance sweep personnel
UXOQCS	UXO Quality Control Supervisor
UXOSO	UXO safety officer
V	vanadium
VC	vinyl chloride
VI	vapor intrusion
VISL	vapor intrusion screening level
VOA	volatile organic analyte
VOC	volatile organic compound
VOH	volatile organic hydrocarbon
VP	soil vapor point
VQ	validation qualifier
vs	versus
VSI	visual site inspection
VSL	vapor screening level
VSP	Visual Sample Plan
VX	nerve agent (O-ethyl-S-[diisopropylaminoethyl]-methylphosphonothiolate)
WAC	Women's Army Corps
WDTA	Waste Disposal Trench Area
WNWR	Wheeler National Wildlife Refuge
WOE	weight of evidence
WP	white phosphorus
WPL	worker population limit
WQC	water quality criteria
WRS	Wilcoxon rank sum
WS	watershed
WSA	Watershed Screening Assessment
WTP	water treatment plant
WWI	World War I
WWII	World War II
WWTP	wastewater treatment plant
X	Data collected in a manner that is now considered to be inconsistent with good scientific practice. These data are considered unusable. However, since these data exist in the database, additional definitive samples may be needed to verify the presence or absence of any positively detected result.
XRF	x-ray fluorescence
yd^3	cubic yards
ZVI	zero-valent iron

TABLES

Table 2-1

Summary of Receptor Cancer Risk and Noncancer Hazard for Chemicals of Concern
Reasonable Maximum Exposure
RSA-204 Corrective Measures Implementation Work Plan
Redstone Arsenal, Madison County, Alabama

CANCER RISK

Receptors	Total Soil IELCR	Groundwater IELCR	CUMULATIVE RISK SOIL	CUMULATIVE RISK SOIL AND GROUNDWATER
Industrial Receptors:				
Commercial Worker	3.4E-08	3.6E-04	3.4E-08	3.6E-04
Construction Worker	2.2E-07	1.6E-05	2.2E-07	1.6E-05
Hypothetical Residential Receptors:				
Child Resident [a]	*	3.4E-04	*	3.4E-04
Adult Resident [a]	*	6.0E-04	*	6.0E-04
Lifetime Resident [a]	*	9.5E-04	*	9.5E-04

NONCANCER HAZARD

Receptors	Total Soil HI	Groundwater HI	CUMULATIVE HI SOIL	CUMULATIVE HI SOIL AND GROUNDWATER
Industrial Receptors:				
Commercial Worker	0.015	2500	0.015	2500
Construction Worker	0.042	2800	0.042	2800
Hypothetical Residential Receptors:				
Child Resident [b]	0.22	9200	0.22	9200

Taken from the RSA-204 RFI (Shaw, 2013a).

[a] Risk associated with the hypothetical residential receptor; child and adult resident risk are summed to estimate the cancer risk for the lifetime resident.

[b] The child resident provides the more restrictive noncancer assessment due to this receptor's greater soil ingestion rate, drinking water consumption rate, and body surface area exposed when expressed on a body weight basis. For this reason, the noncancer hazard indices are calculated for the residential child receptor and evaluated qualitatively for the residential adult receptor.

* Total soil IELCR and cumulative risk soil were not estimated for hypothetical residential receptors for exposure to soil alone because no chemicals in soil were identified as carcinogenic COCs.

COC - Chemicals of concern.

HI - Hazard index.

IELCR - Individual excess lifetime cancer risk.

Table 2-2

Conclusions of the ARBCA RM-2 Evaluation
RSA-204 Corrective Measures Implementation Work Plan
Redstone Arsenal, Madison County, Alabama

Receptors	Exposure to Soil [a]	Relevant COCs in Soil	Exposure to Soil and Groundwater [a]	Relevant COCs in Groundwater [b]	COPACs
Commercial Worker	√	(None)	X	Perchlorate 2,6-Dinitrotoluene 2-Nitrotoluene Trichloroethene	(None)
Construction Worker	√	(None)	X	Perchlorate 2-Nitrotoluene Trichloroethene	
Hypothetical Resident	√	(None)	X	Perchlorate 2,6-Dinitrotoluene 2-Nitrotoluene RDX Trichloroethene	

Taken from the RSA-204 RFI (Shaw, 2013a).
Notes:

√ Cumulative cancer risk and noncancer hazard were found to be acceptable.

X Cumulative cancer risk and noncancer hazard were found to be unacceptable.

[a] Risk conclusions exclude inorganics found to be naturally occurring.

[b] All chemicals with MCLs were included in the RM-2 risk assessment for this site (Shaw, 2013a). However, chemicals with maximum detected concentrations below their MCLs are not included as final COCs for exposure to groundwater.

ARBCA - Alabama Risk-Based Corrective Action.
COC - Chemical of concern.
COPAC - Chemical of potential analytical concern.
RM-2 - Risk-Management-2.
MCL - Maximum contaminant level.

Table 3-1

Potential Federal and State Regulations Applicable to Groundwater Corrective Measures
RSA-204 Corrective Measures Implementation Work Plan
Redstone Arsenal, Madison County, Alabama

Standard, Requirement, or Criterion	Requirement	Applicability	Comments
Federal			
Safe Drinking Water Act – 40 CFR 149	Sole-source drinking water aquifer designation.	Not applicable	The site is not located over a sole-source aquifer.
Safe Drinking Water Act (SDWA), 40 U.S.C. Section 300 – National Primary Drinking Water Standards - 40 CFR Part 141	Applicable to the use of public water systems. Establishes maximum contaminant level, monitoring requirements, and treatment techniques.	Applicable	Federal drinking water standards are used by ADEM to establish cleanup standards.
Safe Drinking Water Act (SDWA), 40 U.S.C. Section 300 – Maximum Contaminant Level Goals - 40 CFR 143	Establishes drinking water quality goals set at levels of no known or anticipated adverse health effects.	Applicable	Federal drinking water goals are used by ADEM to establish cleanup standards.
Floodplain Management – 40 CFR 6.302(b) Executive Order 11988	Federal agencies proposing actions to be located in a floodplain must first evaluate the potential adverse effects those actions might have on the natural and beneficial values served by the floodplain.	Not applicable	The site is not located within a floodplain.
Floodplain Management – Resource Conservation and Recovery Act (RCRA); Resource Conservation and Recovery Act Location Standards, 42 USC Section 6901, 40 CFR 264.18(b)	Requires treatment, storage, or disposal facilities to be designated, constructed, operated, and maintained to avoid washout on a 100-year floodplain.	Not applicable	No new regulated units will be developed as part of this remedy
Protection of Wetlands – 40 CFR 6.302(a) Executive Order 11990	Federal agencies are directed to avoid construction located in wetlands unless the agency head finds: (1) no practical alternative to such construction, and (2) the proposed action includes all practical measures to minimize harm to wetlands which might results from such use.	Not applicable	No construction will be conducted in wetlands.
Protection of Wetlands – 40 CFR 230	Sets forth guidelines for fill material in wetlands	Not applicable	Filling wetlands is not a component of the expected remedy.
Wetlands Permitting - 32 CFR 650.68	Identifies permitting requirements for excavation activities in wetlands.	Not applicable	No wetlands or permanent surface water/aquatic habitat are located within RSA-204.

Table 3-1

Potential Federal and State Regulations Applicable to Groundwater Corrective Measures
RSA-204 Corrective Measures Implementation Work Plan
Redstone Arsenal, Madison County, Alabama

Standard, Requirement, or Criterion	Requirement	Applicability	Comments
Endangered Species Act 16 USC 1531 50 CFR 200 & 402	Requires federal agencies to ensure that actions are not likely to threaten the continued existence of endangered/threatened species or adversely modify or destroy the critical habitats of such species.	Potentially applicable, unlikely for RSA 204	Four currently federally listed threatened or endangered species and one formerly federally listed species occur within RSA: Price's potato bean (*Apios priceana*); Alabama cave shrimp (*Palaemonias alabamae*); gray bat (*Myotis grisescens*); Indiana bat (*Myotis sodalis*); and the bald eagle (*Haliaeetus leucocephalus*), which was delisted in July 2007. Applicable if endangered/threatened species are encountered at RSA-204, which is unlikely given the lack of suitable habitat at this site.
Fish and Wildlife Coordination Act - 16 USC 661-666 33 CFR 320-330	Sets forth procedures for consultation between regulatory agencies to consider wildlife conservation. Requires any federal agency proposing to modify a body of water to consult with the U.S. Fish and Wildlife Service.	Not applicable	Discharge to surface water is not a component of the expected remedy.
Wild and Scenic Rivers Act, 16 U.S.C. 1274, 40 CFR 6.302(e)	Restricts activities within areas affecting national wild, scenic, or recreational rivers.	Not applicable	No such areas present.
Presence of archaeological resources, 43 CFR 7.4(a), 40 CFR 7.5(b)(1), 43CFR 10.4(c), 43 CFR 10.4(d)	Restricts excavating, removing, damaging, or otherwise altering or defacing such resources unless by permit or exception. Protects any such archaeological resources, if discovered. Restricts activities in the area of discovery and requires a reasonable effort be made to protect the objects discovered. Requires consultation with the Indian tribe likely to be affiliated with the objects to determine further disposition per 40 CFR 10.5(b).	Potentially applicable, but unlikely for RSA-204	This regulation would apply if archaeological or historic resources are discovered at the site.
National Archaeological and Historical Preservation Act (16 USC Section 469-470); 35 CFR Part 65	Requires action be taken to recover and preserve artifacts.	Potentially applicable, but unlikely for RSA-204	This regulation would apply if archaeological or historic resources are discovered at the site.
Department of the Army, Environmental Protection and Enhancement; Historic Preservation, 32 CFR 650.181 - 650.193	Requires preservation, restoration, or rehabilitation of all sites, structures, and objects of historical, architectural, archeological, or cultural significance located on Army-controlled property.	Potentially applicable, but unlikely for RSA-204	This regulation would apply if archaeological or historic resources are discovered at the site.

Table 3-1

Potential Federal and State Regulations Applicable to Groundwater Corrective Measures
RSA-204 Corrective Measures Implementation Work Plan
Redstone Arsenal, Madison County, Alabama

Standard, Requirement, or Criterion	Requirement	Applicability	Comments
Native American Graves Protection and Repatriation Act, 25 USC 3001-3013 and 43 CFR 10	Requires protection of Native American graves discovered during excavation activities	Potentially applicable, but unlikely for RSA-204	This regulation would apply if any Native American burial sites or cultural items are discovered at the sites.
American Indian Religious Freedom Act, 42 USC 1996	Requires activities in the area of discovery to be stopped and affected work to be suspended until a compliance strategy is approved.	Potentially applicable, but unlikely for RSA-204	This regulation would apply if archaeological or historic resources are discovered at the sites.
Standards Applicable to Generators of Hazardous Waste, 40 CFR Part 262	Establishes standards for generators of hazardous waste under RCRA. Specifies requirements for hazardous waste packaging, labeling, manifesting, record keeping, and accumulation time.	Applicable	Hazardous waste may be generated as part of groundwater treatment. Any waste generated during treatment may be classified as an F001 listed hazardous waste if it is confirmed that the contamination is associated with spent halogenated solvent TCE used in degreasing operations.
Standards for Owners and Operators of Hazardous Waste Treatment, Storage, and Disposal Facilities, 40 CFR Part 264.13(a)(1)	Must obtain a detailed chemical and physical analysis on a representative sample of the waste(s).	Applicable	Hazardous waste may be generated as part of the groundwater treatment.
Interim Status Standards for Owners and Operators of Hazardous Waste Treatment, Storage, and Disposal Facilities, 40 CFR Part 265.171-173(b)	Management of hazardous waste in containers	Applicable	Hazardous waste may be generated and stored in a pressure vessel.
Land Disposal Restrictions, 40 CFR 268	Identifies hazardous wastes that are restricted from land disposal.	Applicable	Hazardous waste may be generated as part of groundwater treatment.
Discharge to Offsite Surface Water, 40 CFR 122.26, 122.41, and 122.48	Requires that the selected remedial action must establish a standard of control to maintain surface water quality.	Potentially applicable	The remedial activities at the sites may affect areas greater than 1 acre.
Superfund Amendments and Reauthorization Act (SARA), 42 U.S.C. Section 9801 et. Seq.	Requires the discharge to comply with Federal water quality criteria.	Not applicable	RSA is regulated under RCRA.

Table 3-1

Potential Federal and State Regulations Applicable to Groundwater Corrective Measures
RSA-204 Corrective Measures Implementation Work Plan
Redstone Arsenal, Madison County, Alabama

Standard, Requirement, or Criterion	Requirement	Applicability	Comments
Clean Water Act, 33 U.S.C. Sections 1351-1376 – Best Available Treatment Technology, 40 CFR 122	Requires use of best available technology economically achievable to control discharge of toxic pollutants to a Publicly Owned Treatment Works (POTW).	Not applicable	There is no POTW. Sewer at RSA is private.
Clean Water Act, 33 U.S.C. Sections 1351-1376 – National Pollutant Discharge Elimination System (NPDES) Permit Regulations, 40 CFR 122 Subpart C	Requires use of best available technology economically achievable for toxic pollutants discharged to surface waters. Mandates that the discharge must comply with the EPA-approved Water Quality Management Plan.	Potentially applicable but unlikely	No discharge to surface water is planned for this site.
Discharge to a Publicly Owned Treatment Works (POTW), 33 USC Section 1317, 40 CFR 403	Establishes list of toxic pollutants and promulgates pretreatment standards for discharge to POTWs.	Not applicable	There is no POTW. Sewer at RSA is private.
Clean Air Act, codified under, 40 CFR Part 60, part 61, or part 63. Prerequisite for this action: 40 CFR 264,1030(e)	Process vents associated with air or stream stripping operations that manage hazardous wastes with organic concentrations of at least 10 parts per million weight.	Potentially applicable but unlikely	Relevant if vapors including hazardous air pollutants are treated and discharged to the atmosphere via the stack. TCE is a hazardous air pollutant.
State			
Alabama Standards for Owners and Operators of Hazardous Waste Treatment, Storage, and Disposal Facilities, ADEM 335-14-5-.01, Hazardous Waste Program	Establishes location standards for facilities located in 100-year floodplains. Forbids placement of any non-containerized or bulk liquid hazardous waste within any salt dome/salt bed, underground mine or cave.	Not applicable	The site is not located within a floodplain.
Alabama Interim Status Standards for Owners and Operators of Hazardous Waste Treatment, Storage, and Disposal Facilities, ADEM 335-14-6, Hazardous Waste Program	Prohibits placement of any hazardous waste in a salt dome, salt bed formation, underground mine, or cave.	Not applicable	Placement of waste is not relevant for this site.

Table 3-1

Potential Federal and State Regulations Applicable to Groundwater Corrective Measures
RSA-204 Corrective Measures Implementation Work Plan
Redstone Arsenal, Madison County, Alabama

Standard, Requirement, or Criterion	Requirement	Applicability	Comments
Alabama Drinking Water Standards ADEM 335-7-2	Applicable to the use of public water systems. Establishes maximum contaminant level, monitoring requirements, and treatment techniques.	Applicable	Drinking water standards established by ADEM based on Federal drinking water goals.
Alabama Water Quality Criteria, ADEM 335-6-10, Water Quality Program	Requires any federal agency proposing to modify a body of water to consult with the U.S. Fish and Wildlife Service. Establishes antidegradation policy based on water use classifications and potentially impacted wildlife, fish, and aquatic life	Potentially applicable but unlikely	Relevant if discharge to surface water is included as a component of a remedial alternative, which is not planned for RSA-204.
Wetlands Protection - ADEM 335-8-2.02/2.03	Defines requirements for dredging or filling and mitigation of impacts to wetlands.	Not applicable	Dredging and/or filling of wetlands are not components of the anticipated remedy for this site.
Alabama Non-Game Species Regulation, AAC 220-2.92	Identifies state-protected species.	Potentially applicable	State non-game species may be found at RSA-157. However, proposed actions are unlikely to adversely impact any non-game species that may be present.
Phase I Organic Air Emission Standards: AAC 335-14-5-.27 and 335-15-5-.28	For TSDFs. Emission standards for process vents and emission standards for leaks from specific equipment containing hazardous waste with a total organic concentration of at least 10 percent by weight.	Not applicable	No TSDFs are planned as part of the remedy for RSA-204.
Phase II Organic Air Emission Standards: AAC 335-14-5-.29	For TSDFs. Emission standards tanks, surface impoundments, containers and miscellaneous units that contact hazardous waste containing an average organic concentration greater than 500 parts per million weight.	Not applicable	No regulated units will be developed as part of this remedy.
Alabama Solid Waste Act, Code of Alabama, Title 22, Chapter 27	Establishes sitewide program to provide for the safe management of nonhazardous wastes.	Applicable	Nonhazardous waste may be generated during monitoring or remedial activities.
Alabama Solid Waste Management Regulations, ADEM 335-13-1 through 335-13-8	Establishes minimum criteria for the processing, recycling, transportation, and disposal of solid wastes and the design, location, and operation of solid waste disposal facilities.	Applicable	Nonhazardous waste may be generated, transported, or disposed as part of monitoring or remedial activities.

Table 3-1

Potential Federal and State Regulations Applicable to Groundwater Corrective Measures
RSA-204 Corrective Measures Implementation Work Plan
Redstone Arsenal, Madison County, Alabama

Standard, Requirement, or Criterion	Requirement	Applicability	Comments
Alabama Stormwater Discharge Regulations, ADEM 335-6-12	Establishes requirements for a stormwater discharge permit for construction activities that disturb greater than 1 acre of land.	Potentially applicable	The remedial activities at the site may affect an area greater than 1 acre.
Alabama Water Quality Criteria and Use Classifications Regulations, ADEM 335-6-10	Establishes water quality criteria and uses for lakes and rivers based on toxicity to aquatic organisms and human health and water use classifications and antidegradation policy.	Not applicable	Relevant if discharge to surface water is included as a component of a remedial alternative. No discharge to surface water is planned for this site.
Indirect Discharge Permits and Pretreatment Rules, ADEM 335-6-5	Establishes list of toxic pollutants and promulgates pretreatment standards for discharge to POTWs and defines the requirements for State Indirect Discharge permits for discharge to POTWs.	Not applicable	There is no POTW. Sewer at RSA is private.
Alabama Wellhead Protection Program, ADEM 335-7-12	Establishes requirements for the closure or abandonment of groundwater monitoring or extraction wells.	Applicable	Applicable to the closure of monitoring wells prior to any treatment, and the construction of the monitoring wells.

CFR – Code of Federal Regulations.
RCRA – Resource Conservation and Recovery Act.
TCE – Trichloroethene.

Table 3-2

Groundwater and Soil Cleanup Goals
RSA-204 Corrective Measures Implementation Work Plan
Redstone Arsenal, Madison County, Alabama

Groundwater and Soil COCs Requiring Action	Groundwater Cleanup Goals			Soil Cleanup Goals	
	Cleanup Goals (µg/L)	Basis	Associated Cancer Risk	Cleanup Goals (mg/kg)	Basis
Perchlorate	15	HAL*	NA	1.7	Leachate-Based SSL**
Trichlorethene	5	MCL	4.30E-06	NA	NA
2-Nitrotoluene	0.7	Cumulative Risk	2.59E-06	NA	NA
2,6-Dinitrotoluene	0.1	Cumulative Risk	2.32E-06	NA	NA
RDX	0.5	Cumulative Risk	8.21E-07	NA	NA
		Total	1.00E-05		

Notes:
COC - Chemical of concern.
MCL - Maximum contaminant level (40 CFR Part 141).
mg/kg - Milligrams per kilogram.
NA - Not applicable.
* The Interim Drinking Water Health Advisory level (HAL) of 15 micrograms per liter (µg/L) (Department of Defense, 2009, "Perchlorate Release Management Policy", Memorandum from Wayne Arny to Deputy Assistant Secretaries of the Army, Navy and Air Force, 4 April).

** Site-specific cleanup goal for perchlorate based on leachate-based soil screening level (SSL) presented in the *Final Installation-Wide Groundwater Cleanup Strategy* (Shaw, 2009).

Table 4-1

Groundwater Elevation Summary, Overburden and Interface Wells Adjacent to Excavation Areas 1 and 2
RSA-204 CMI Work Plan
Redstone Arsenal, Madison County, Alabama

Monitoring Well	Zone Monitored	Total Depth	Reference Elevation	Ground Elevation	Monitoring Well Stickup (ft)	Date	DTW (BTOC)	DTW (BGS)	Groundwater Elevation (BTOC)	Groundwater Elevation (Avg)	DTW (Avg - BGS)
Excavation Area 1 - Southeastern											
204-RS2672	INT	24.5	581.12	581.40	-0.28	9/17/2015	19.15	19.43	561.97	563.62	17.77
						10/19/2015	19.25	19.53	561.87		
						11/17/2015	18.90	19.18	562.22		
						12/21/2015	17.76	18.04	563.36		
						1/18/2016	16.95	17.23	564.17		
						2/17/2016	12.15	12.43	568.97		
						3/21/2016	16.66	16.94	564.46		
						4/20/2016	17.43	17.71	563.69		
						5/27/2016	19.24	19.52	561.88		
204-RS2673	INT	24.3	582.05	582.14	-0.09	9/17/2015	19.59	19.68	562.46	563.54	18.60
						10/19/2015	19.27	19.36	562.78		
						11/17/2015	19.50	19.59	562.55		
						12/21/2015	18.77	18.86	563.28		
						1/18/2016	18.51	18.60	563.54		
						2/17/2016	14.20	14.29	567.85		
						3/21/2016	18.01	18.10	564.04		
						4/20/2016	18.55	18.64	563.50		
						5/27/2016	20.18	20.27	561.87		
204-RS2674	INT	24.9	582.12	579.80	2.32	9/17/2015	19.97	17.65	562.15	563.27	16.53
						10/19/2015	20.52	18.20	561.60		
						11/17/2015	19.68	17.36	562.44		
						12/21/2015	19.09	16.77	563.03		
						1/18/2016	18.62	16.30	563.50		
						2/17/2016	14.05	11.73	568.07		
						3/21/2016	18.37	16.05	563.75		
						4/20/2016	18.85	16.53	563.27		
						5/27/2016	20.46	18.14	561.66		
204-RS2030	INT	26.6	584.12	581.54	2.58	9/17/2015	21.53	18.95	562.59	564.04	17.50
						10/19/2015	21.16	18.58	562.96		
						11/17/2015	21.4	18.82	562.72		
						12/21/2015	20.56	17.98	563.56		
						1/18/2016	20.16	17.58	563.96		
						2/17/2016	14.40	11.82	569.72		
						3/21/2016	19.51	16.93	564.61		
						4/20/2016	20.27	17.69	563.85		
						5/27/2016	21.71	19.13	562.41		

Table 4-1

Groundwater Elevation Summary, Overburden and Interface Wells Adjacent to Excavation Areas 1 and 2
RSA-204 CMI Work Plan
Redstone Arsenal, Madison County, Alabama

Monitoring Well	Zone Monitored	Total Depth	Reference Elevation	Ground Elevation	Monitoring Well Stickup (ft)	Date	DTW (BTOC)	DTW (BGS)	Groundwater Elevation (BTOC)	Groundwater Elevation (Avg)	DTW (Avg - BGS)
204-RS2031	INT	26.2	579.83	576.94	2.89	9/17/2015	---	---	---	564.50	12.44
						10/19/2015	---	---	---		
						11/17/2015	---	---	---		
						12/21/2015	16.28	13.39	563.55		
						1/18/2016	15.90	13.01	563.93		
						2/17/2016	10.35	7.46	569.48		
						3/21/2016	15.35	12.46	564.48		
						4/20/2016	16.12	13.23	563.71		
						5/27/2016	18.00	15.11	561.83		
K142-RS1224	INT	35.0	580.30	580.44	-0.14	9/17/2015	18.14	18.28	562.16	563.25	17.19
						10/19/2015	18.95	19.09	561.35		
						11/17/2015	18.41	18.55	561.89		
						12/21/2015	17.19	17.33	563.11		
						1/18/2016	17.12	17.26	563.18		
						2/17/2016	13.55	13.69	566.75		
						3/21/2016	14.92	15.06	565.38		
						4/20/2016	17.02	17.16	563.28		
						5/27/2016	18.13	18.27	562.17		
									Average	**563.70**	**16.67**
Excavation Area 2 - Central											
204-RS2676	OVB	20.3	581.06	578.88	2.18	9/17/2015	NM	---	---	563.51	15.37
						10/19/2015	NM	---	---		
						11/17/2015	NM	---	---		
						12/21/2015	18.08	15.90	562.98		
						1/18/2016	17.84	15.66	563.22		
						2/17/2016	14.65	12.47	566.41		
						3/21/2016	17.45	15.27	563.61		
						4/20/2016	17.96	15.78	563.10		
						5/27/2016	19.35	17.17	561.71		
204-RS2677	OVB	26	580.75	578.31	2.45	9/17/2015	18.62	16.18	562.13	562.93	15.38
						10/19/2015	19.22	16.77	561.53		
						11/17/2015	18.44	16.00	562.31		
						12/21/2015	17.98	15.54	562.77		
						1/18/2016	17.76	15.32	562.99		
						2/17/2016	14.10	11.65	566.65		
						3/21/2016	17.32	14.88	563.43		
						4/20/2016	17.82	15.38	562.93		
						5/27/2016	19.19	16.75	561.56		

Table 4-1

Groundwater Elevation Summary, Overburden and Interface Wells Adjacent to Excavation Areas 1 and 2
RSA-204 CMI Work Plan
Redstone Arsenal, Madison County, Alabama

Monitoring Well	Zone Monitored	Total Depth	Reference Elevation	Ground Elevation	Monitoring Well Stickup (ft)	Date	DTW (BTOC)	DTW (BGS)	Groundwater Elevation (BTOC)	Groundwater Elevation (Avg)	DTW (Avg - BGS)
204-RS2678	OVB	25.5	580.79	578.35	2.44	9/17/2015	17.03	14.59	563.76	562.98	15.36
						10/19/2015	19.27	16.83	561.52		
						11/17/2015	18.55	16.11	562.24		
						12/21/2015	18.13	15.69	562.66		
						1/18/2016	17.98	15.54	562.81		
						2/17/2016	14.40	11.96	566.39		
						3/21/2016	17.56	15.12	563.23		
						4/20/2016	18.02	15.58	562.77		
						5/27/2016	19.30	16.86	561.49		
204-RS2681	OVB	19.8	580.86	578.71	2.16	9/17/2015	18.28	16.12	562.58	563.55	15.16
						10/19/2015	18.90	16.74	561.96		
						11/17/2015	18.14	15.98	562.72		
						12/21/2015	17.63	15.47	563.23		
						1/18/2016	17.40	15.24	563.46		
						2/17/2016	12.25	10.09	568.61		
						3/21/2016	16.97	14.81	563.89		
						4/20/2016	17.39	15.23	563.47		
						5/27/2016	18.88	16.72	561.98		
204-RS2683	INT		581.81	579.49	2.32	9/17/2015	19.84	17.52	561.97	562.59	16.90
						10/19/2015	20.34	18.02	561.47		
						11/17/2015	19.68	17.36	562.13		
						12/21/2015	19.31	16.99	562.50		
						1/18/2016	19.14	16.82	562.67		
						2/17/2016	16.30	13.98	565.51		
						3/21/2016	18.83	16.51	562.98		
						4/20/2016	19.22	16.90	562.59		
						5/27/2016	20.38	18.06	561.43		
204-RS2684	INT		579.09	576.94	2.15	9/17/2015	16.88	14.73	562.21	563.06	13.88
						10/19/2015	17.51	15.36	561.58		
						11/17/2015	16.72	14.57	562.37		
						12/21/2015	16.22	14.07	562.87		
						1/18/2016	16.0	13.85	563.09		
						2/17/2016	11.85	9.70	567.24		
						3/21/2016	15.58	13.43	563.51		
						4/20/2016	16.03	13.88	563.06		
						5/27/2016	17.47	15.32	561.62		

Table 4-1

Groundwater Elevation Summary, Overburden and Interface Wells Adjacent to Excavation Areas 1 and 2
RSA-204 CMI Work Plan
Redstone Arsenal, Madison County, Alabama

Monitoring Well	Zone Monitored	Total Depth	Reference Elevation	Ground Elevation	Monitoring Well Stickup (ft)	Date	DTW (BTOC)	DTW (BGS)	Groundwater Elevation (BTOC)	Groundwater Elevation (Avg)	DTW (Avg - BGS)
K142-RS1223	INT	29.0	581.43	578.65	2.78	9/17/2015	19.34	16.56	562.09	563.02	15.63
						10/19/2015	19.97	17.19	561.46		
						11/17/2015	19.15	16.37	562.28		
						12/21/2015	18.64	15.86	562.79		
						1/18/2016	18.58	15.80	562.85		
						2/17/2016	13.70	10.92	567.73		
						3/21/2016	17.93	15.15	563.50		
						4/20/2016	18.45	15.67	562.98		
						5/27/2016	19.9	17.12	561.53		
									Average	**563.09**	**15.38**

All depths are in feet below ground surface.
All elevations are in feet above mean sea level.

Avg - Average.
BGS - Below ground surface.
BTOC - Below top of casing.
DTW - depth to water
ft - Feet.
INT - Interface.
OVB - Overburden.
NM - Not Measured

FIGURES

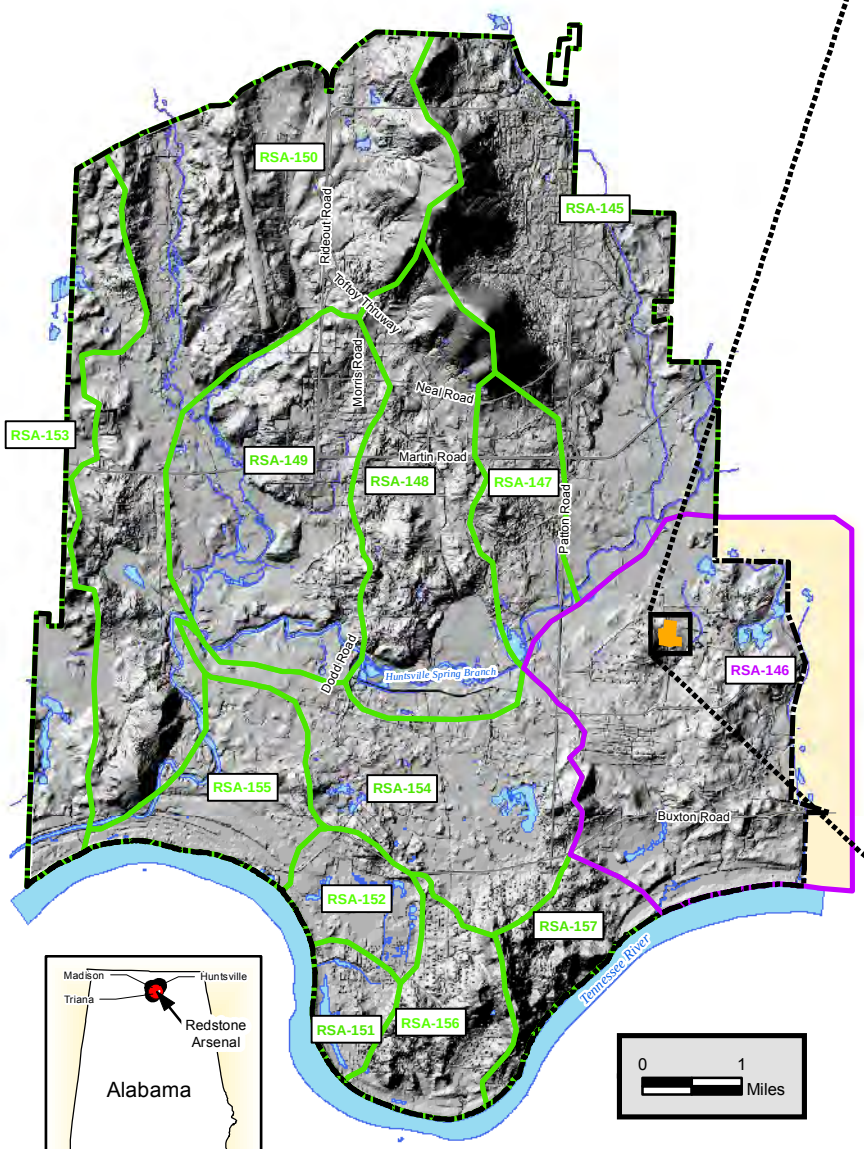

Legend

- RSA-204 Site Boundary
- RSA-146 Offsite Area
- NFA Sites Inside the RSA-204 Site Boundary
- RSA-146 Groundwater Boundary
- Groundwater Unit Boundaries
- RSA Installation Boundary
- Roads
- Water Bodies
- Surface Drainage Features (Some Ephemeral)

Figure 1-1

RSA-204
Site Location Map

Redstone Arsenal
Madison County, Alabama
Contract No. W91ZLK-09-D-0006

1 inch = 400 feet

0 200 400 800 Feet

NAD 1983 State Plane Alabama East Feet

CB&I Federal Services LLC

H:\Redstone\GIS_Documents\Project_maps\RSA_204\RSA_204_CMIP_Rev0_Nov2015\RSA_204_Site_Location_map.mxd

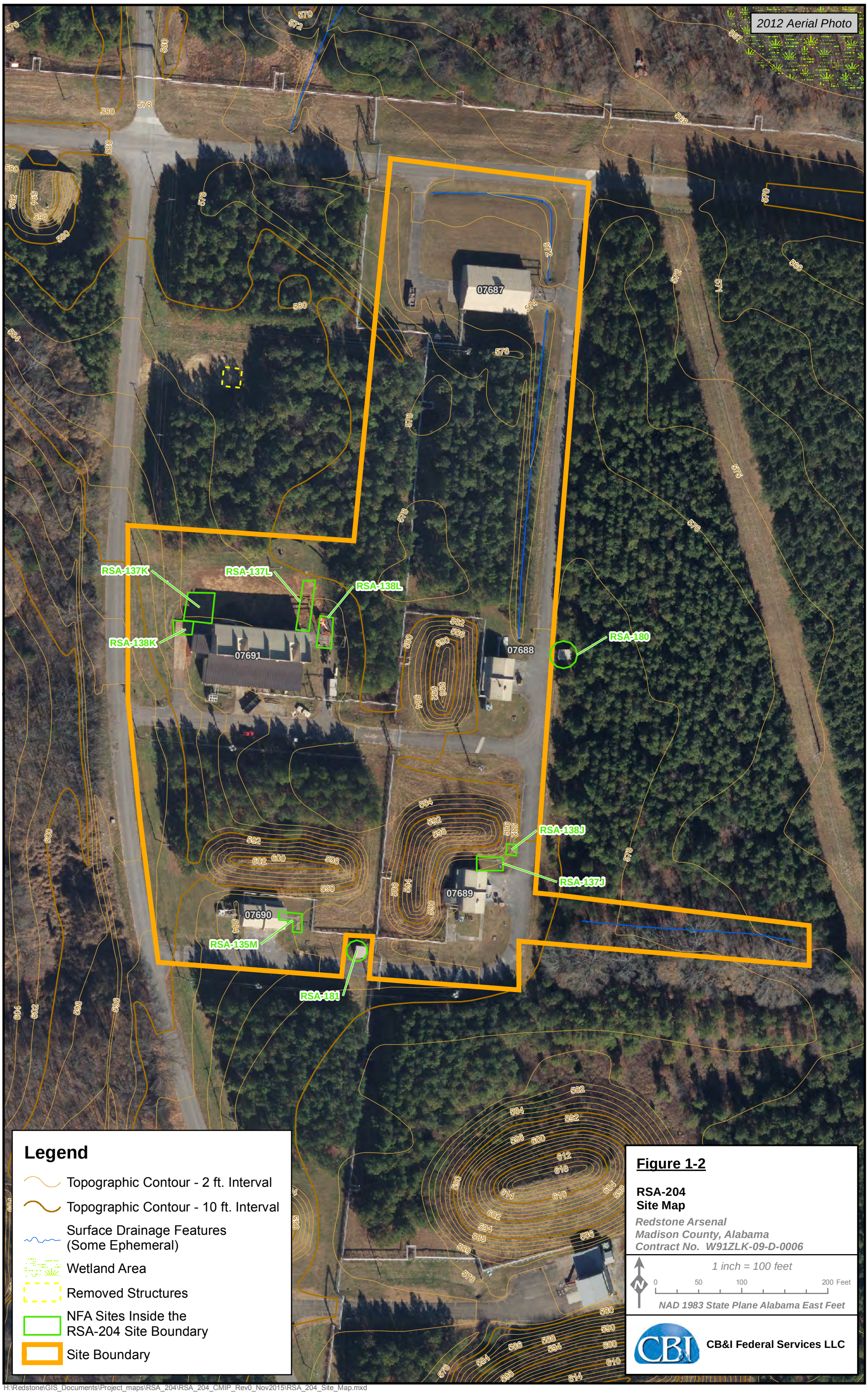

H:\Redstone\GIS_Documents\Project_maps\RSA_204\RSA_204_CMIP_Rev0_Nov2015\RSA_204_Site_Map.mxd

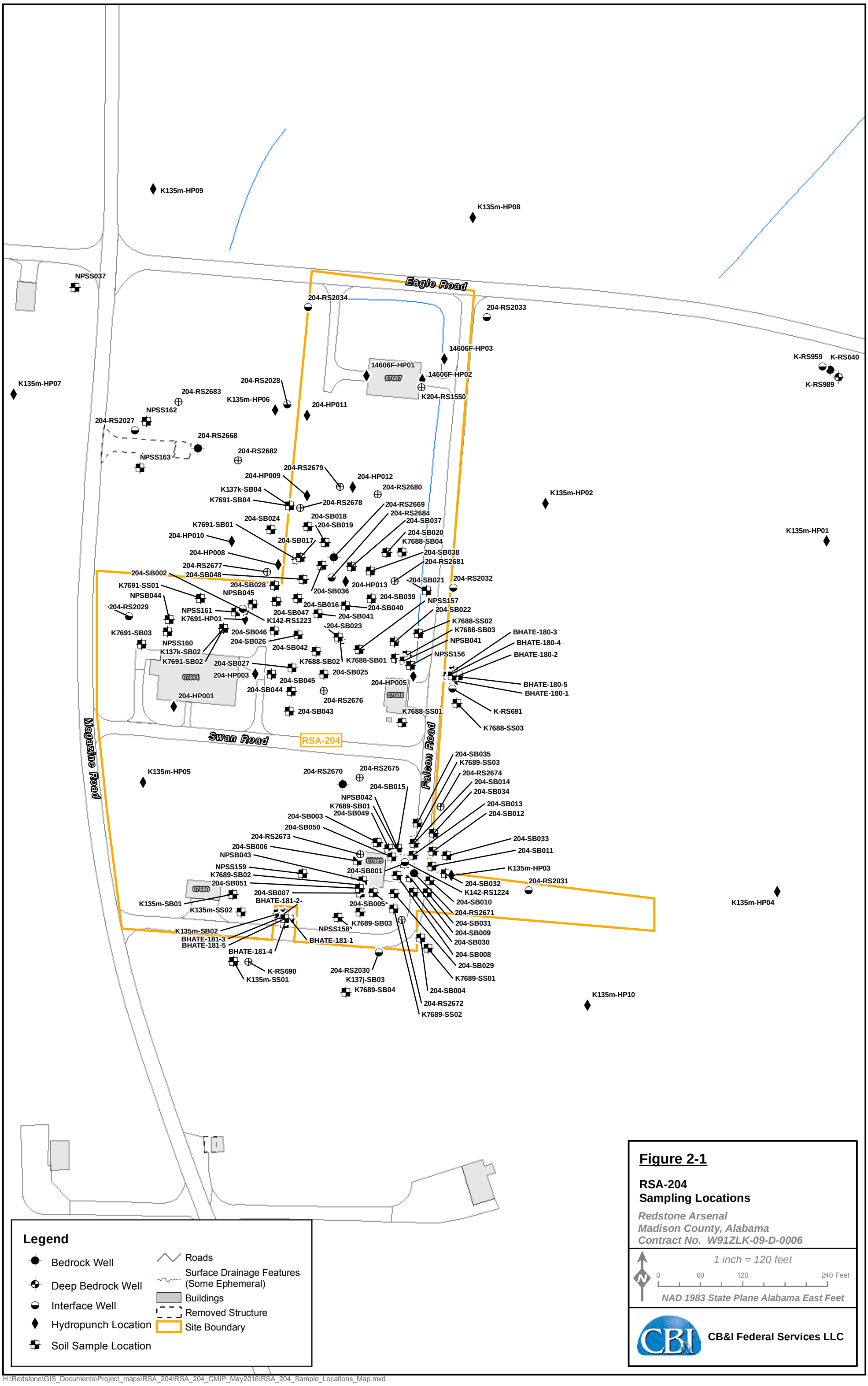

Figure 2-1

RSA-204
Sampling Locations

Redstone Arsenal
Madison County, Alabama
Contract No. W91ZLK-09-D-0006

H:\Redstone\GIS_Documents\Project_maps\RSA_204\RSA_204_CMIP_May2016\RSA_204_Sample_Locations_Map.mxd

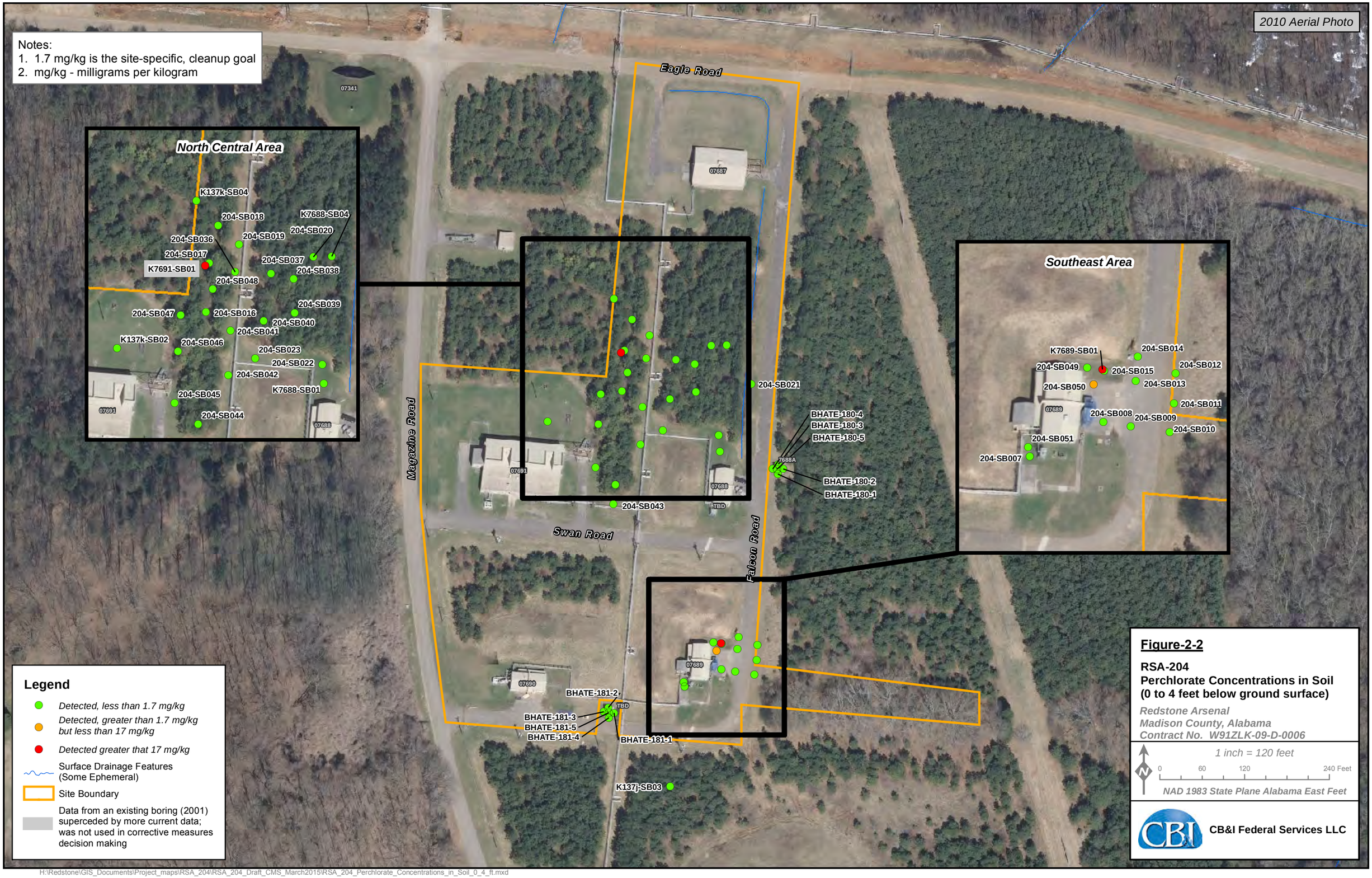

H:\Redstone\GIS_Documents\Project_maps\RSA_204\RSA_204_Draft_CMS_March2015\RSA_204_Perchlorate_Concentrations_in_Soil_0_4_ft.mxd

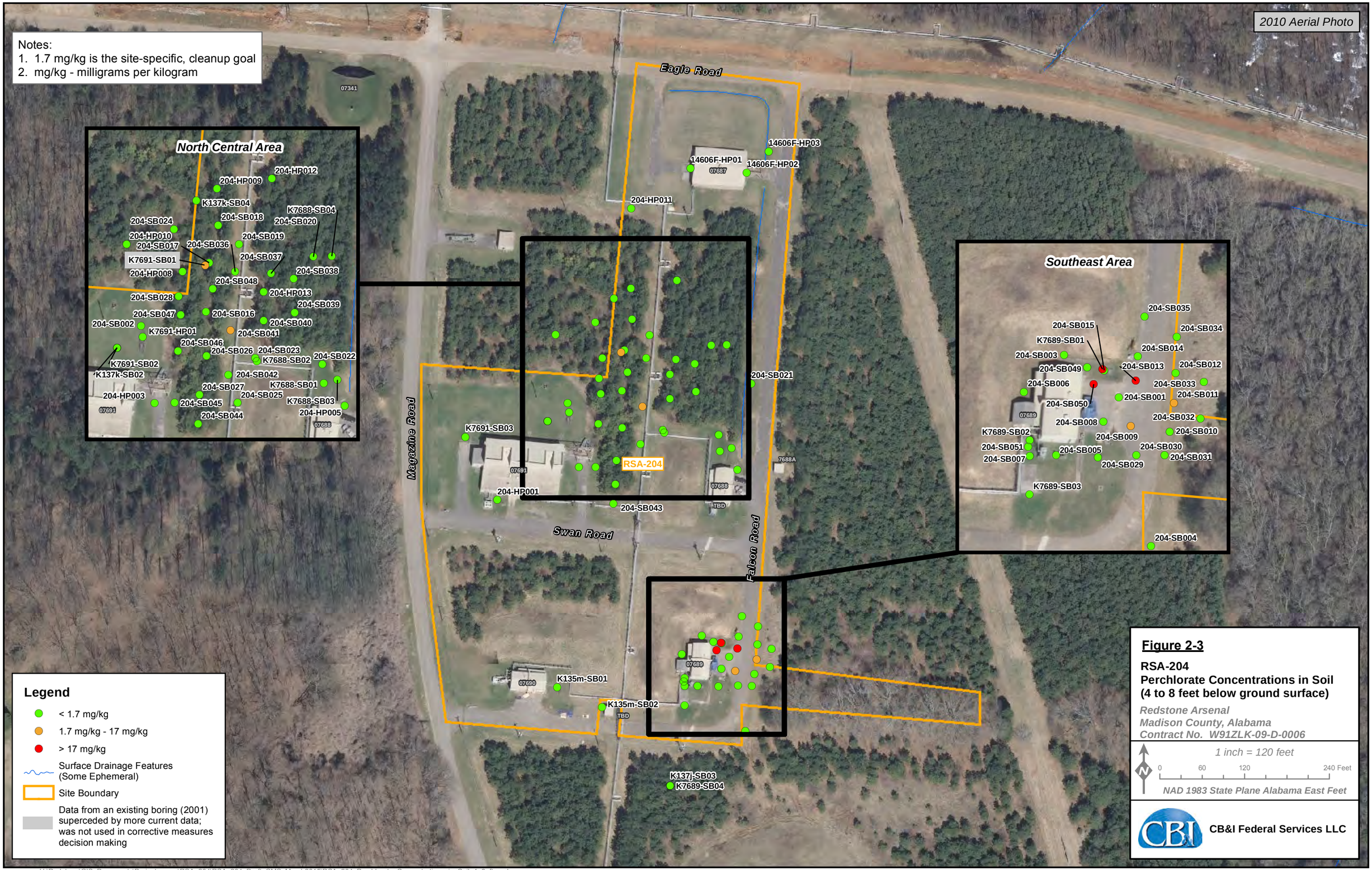

H:\Redstone\GIS_Documents\Project_maps\RSA_204\RSA_204_Draft_CMS_March2015\RSA_204_Perchlorate_Concentrations_in_Soil_4_8_ft.mxd

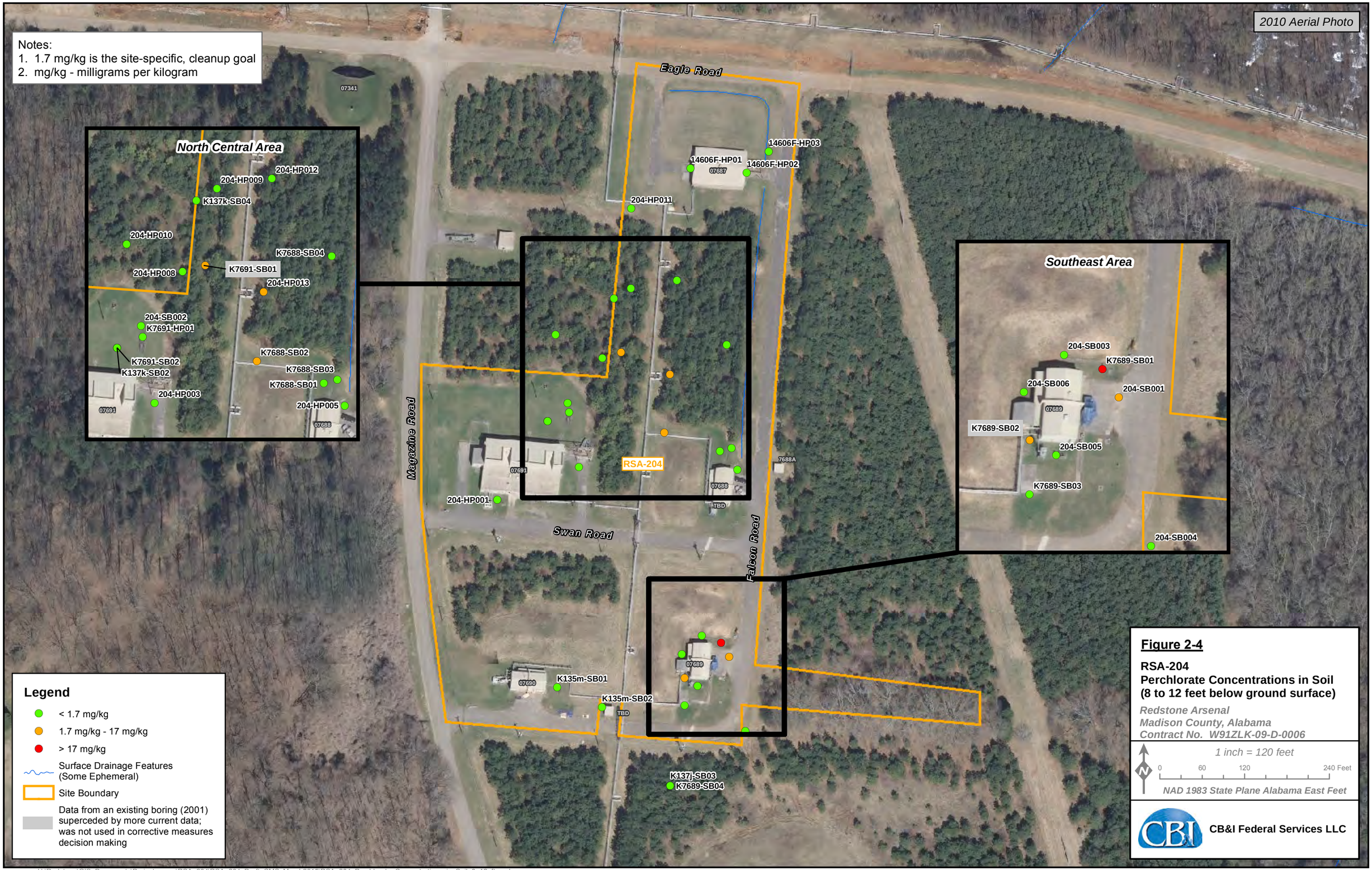

H:\Redstone\GIS_Documents\Project_maps\RSA_204\RSA_204_Draft_CMS_March2015\RSA_204_Perchlorate_Concentrations_in_Soil_8_12_ft.mxd

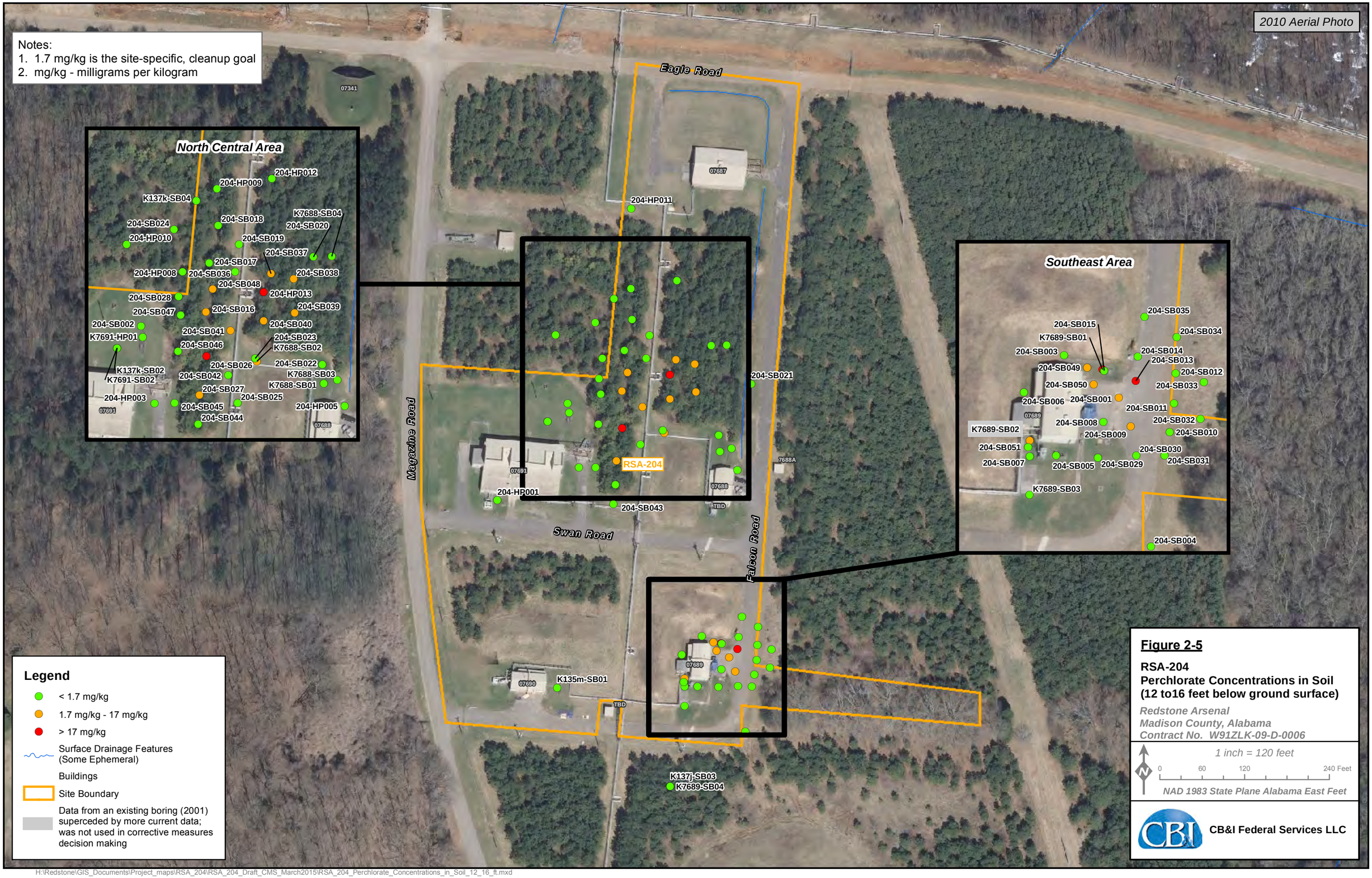

H:\Redstone\GIS_Documents\Project_maps\RSA_204\RSA_204_Draft_CMS_March2015\RSA_204_Perchlorate_Concentrations_in_Soil_12_16_ft.mxd

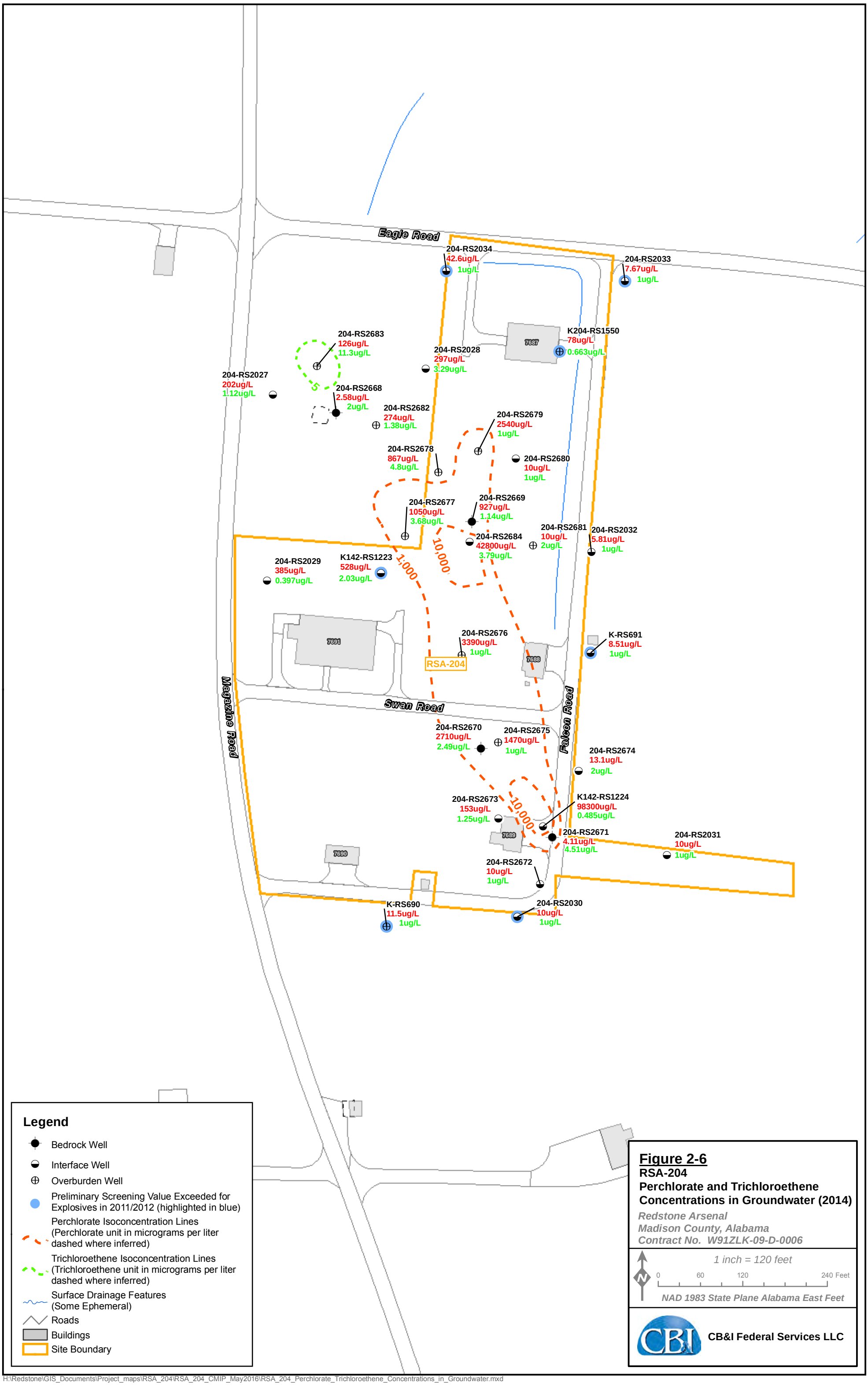

Figure 2-6
RSA-204
Perchlorate and Trichloroethene Concentrations in Groundwater (2014)
Redstone Arsenal
Madison County, Alabama
Contract No. W91ZLK-09-D-0006

H:\Redstone\GIS_Documents\Project_maps\RSA_204\RSA_204_CMIP_May2016\RSA_204_Perchlorate_Trichloroethene_Concentrations_in_Groundwater.mxd

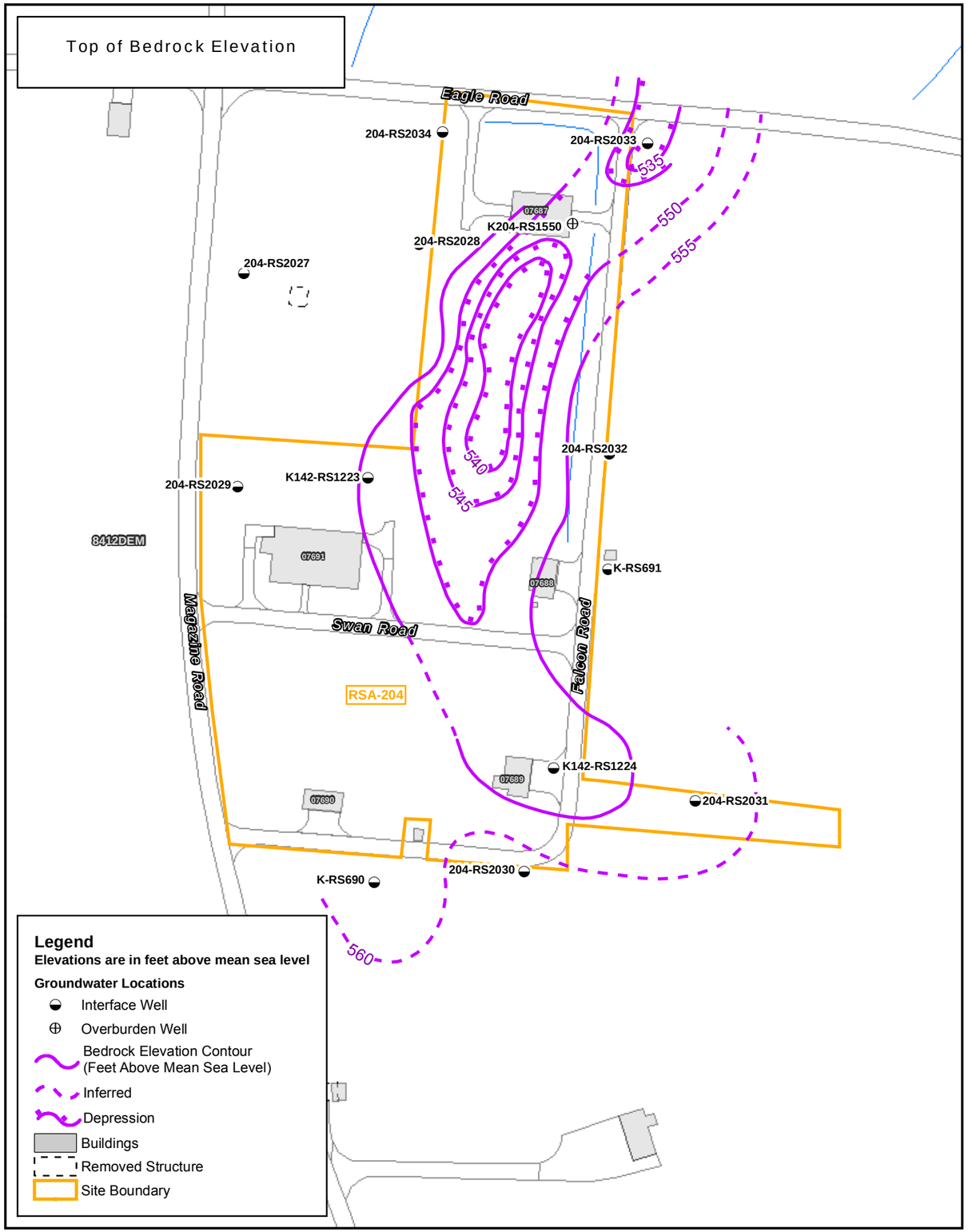

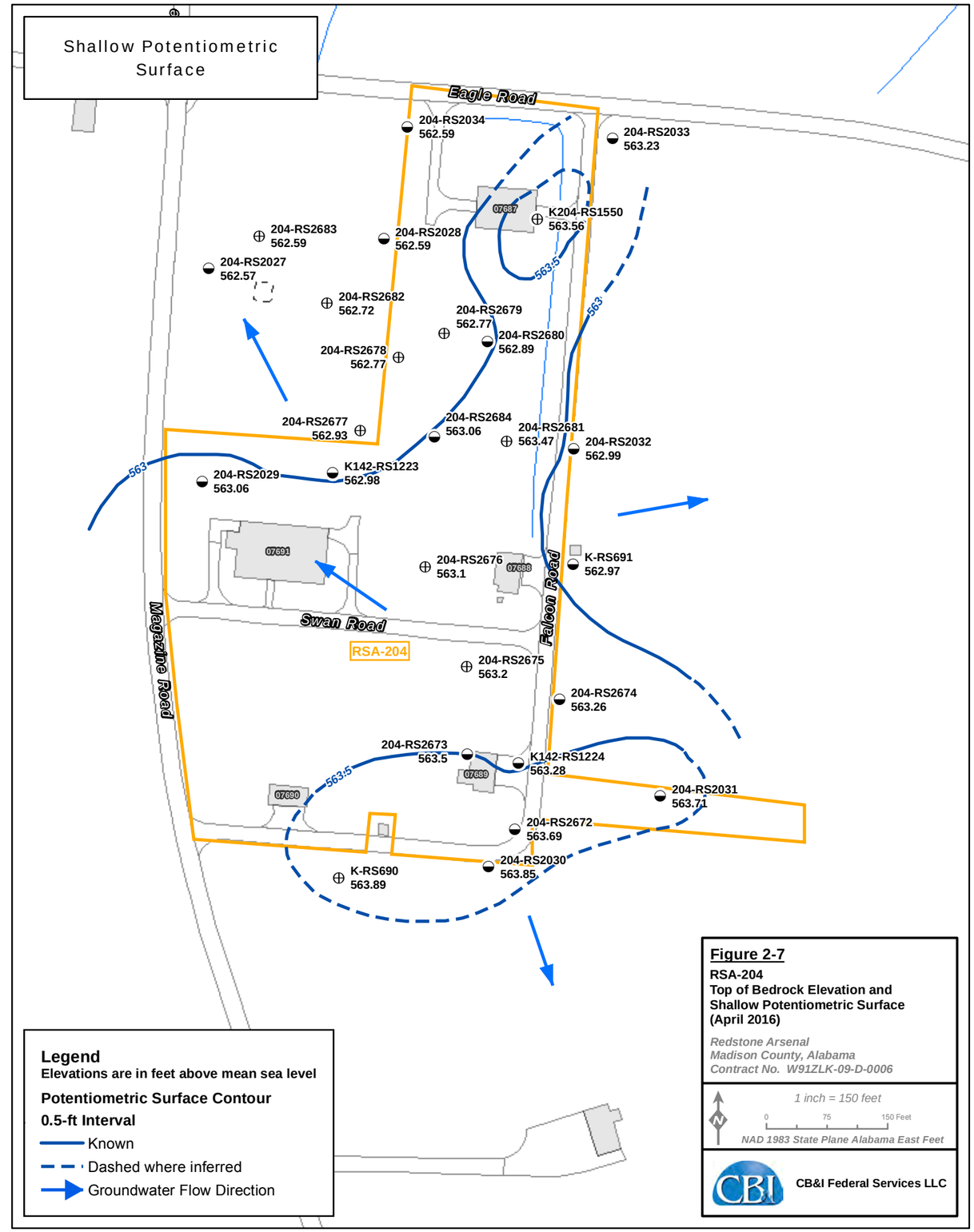

H:\Redstone\GIS_Documents\Project_maps\RSA_204\RSA_204_CMIP_May2016\RSA_204_Shallow_and_Bedrock_Pot_Surfaces.mxd

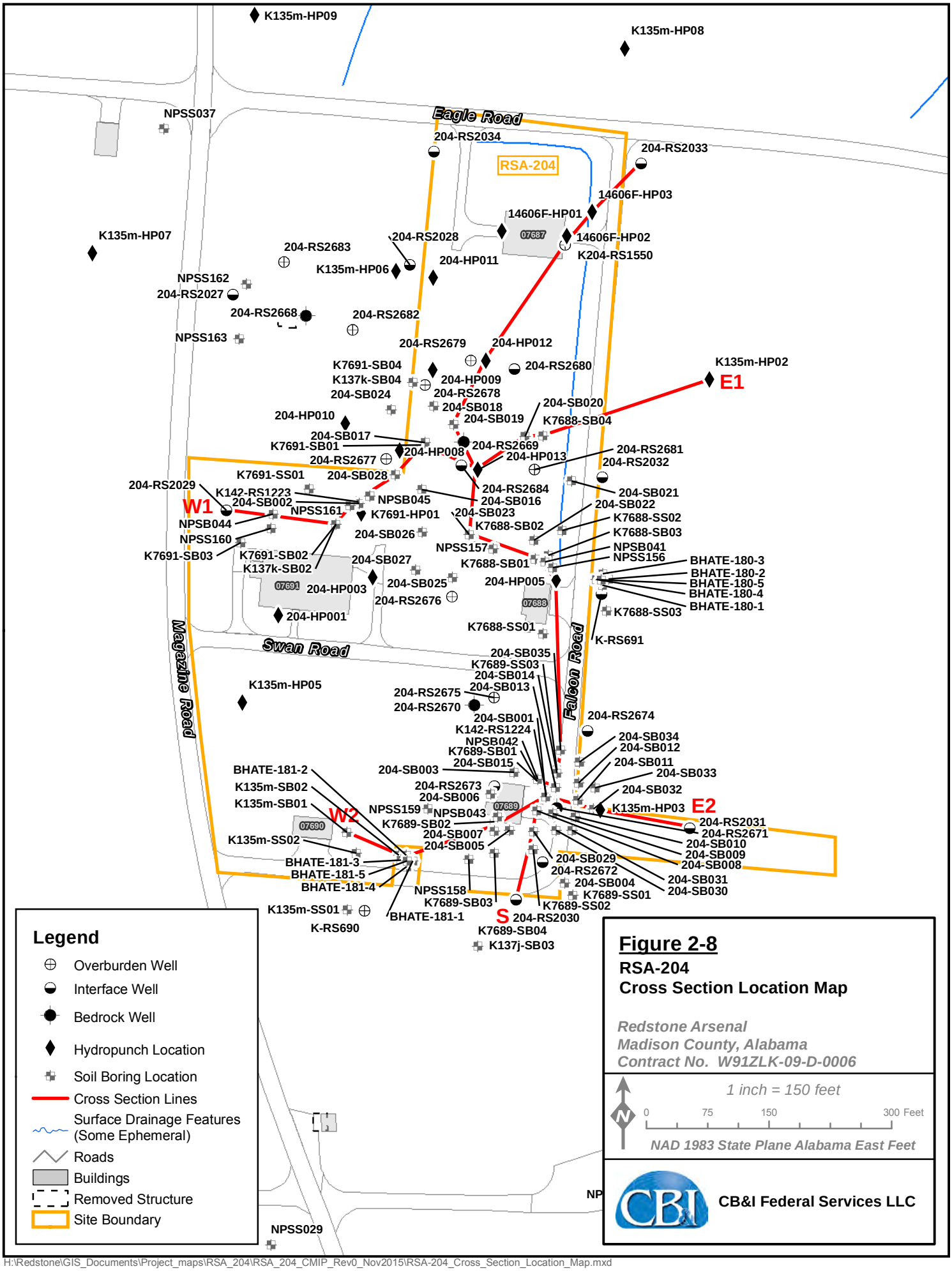

H:\Redstone\GIS_Documents\Project_maps\RSA_204\RSA_204_CMIP_Rev0_Nov2015\RSA-204_Cross_Section_Location_Map.mxd

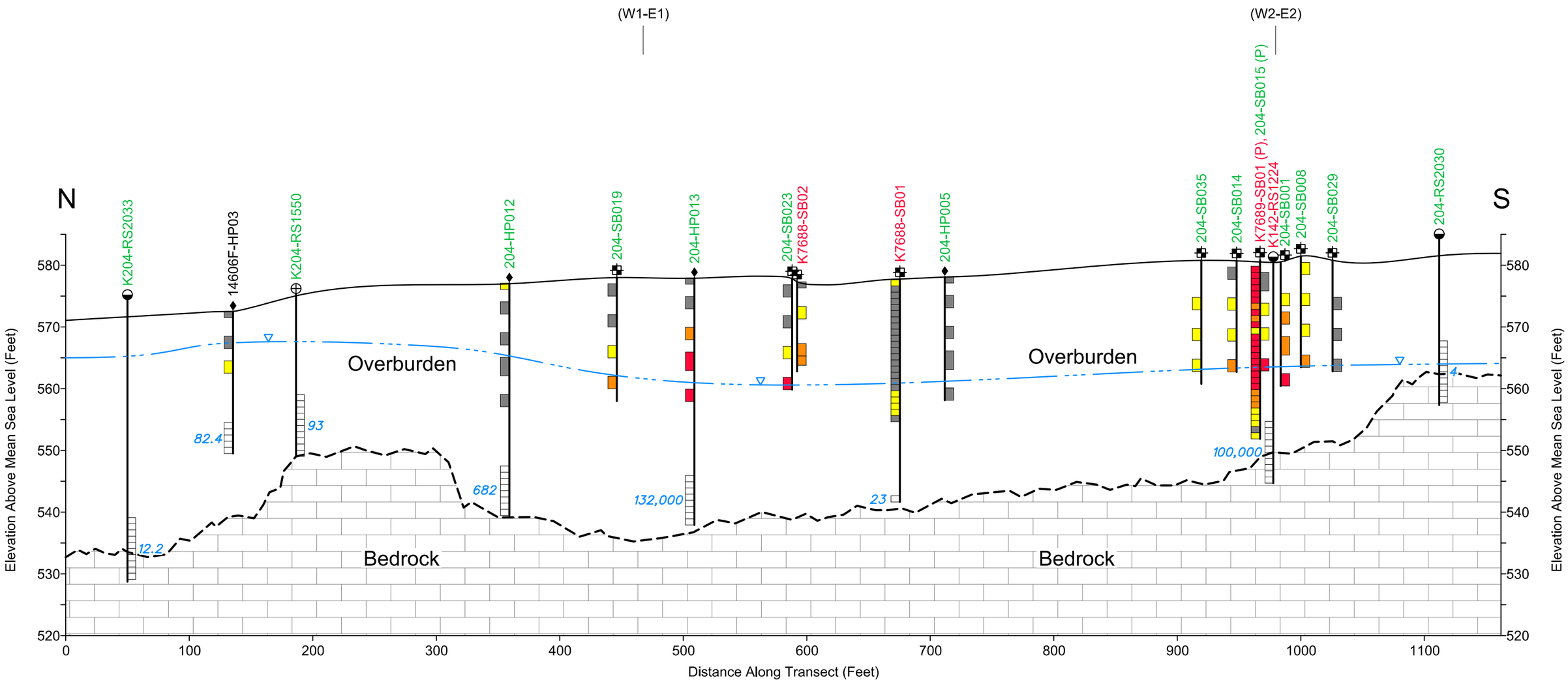

Legend:

204-HP013 Sample Location

Ground Surface

Soil Sample

Potentiometric Surface (Approx.)

Top of Bedrock

93 Screened Interval with Perchlorate Concentration in Groundwater (ug/L)

Soil Boring

Hydropunch / Piezometer

Overburden Well

Interface Well

(P) Projected

(W1-E1) Cross-Section Tie Point

Perchlorate Concentrations in Soil (mg/kg):

Not Detected

Detected, but <1.7

>1.7 - <17

>17

Note:

2001/2002 borings shown in red; 2012 borings shown in green. Other dates are not included.

HORIZONTAL SCALE:

0 80 160 FEET

VERTICAL SCALE (5X HORIZONTAL):

0 16 32 FEET

Figure 2-9
RSA-204
North-South Cross-Section

Redstone Arsenal
Madison County, Alabama
Contract No. W91ZLK-09-D-0006

CB&I Federal Services LLC

\\SEIKNXFP02\CADD2\Redstone_PMC\RSA-204\RSA-204 Xsecs.dgn

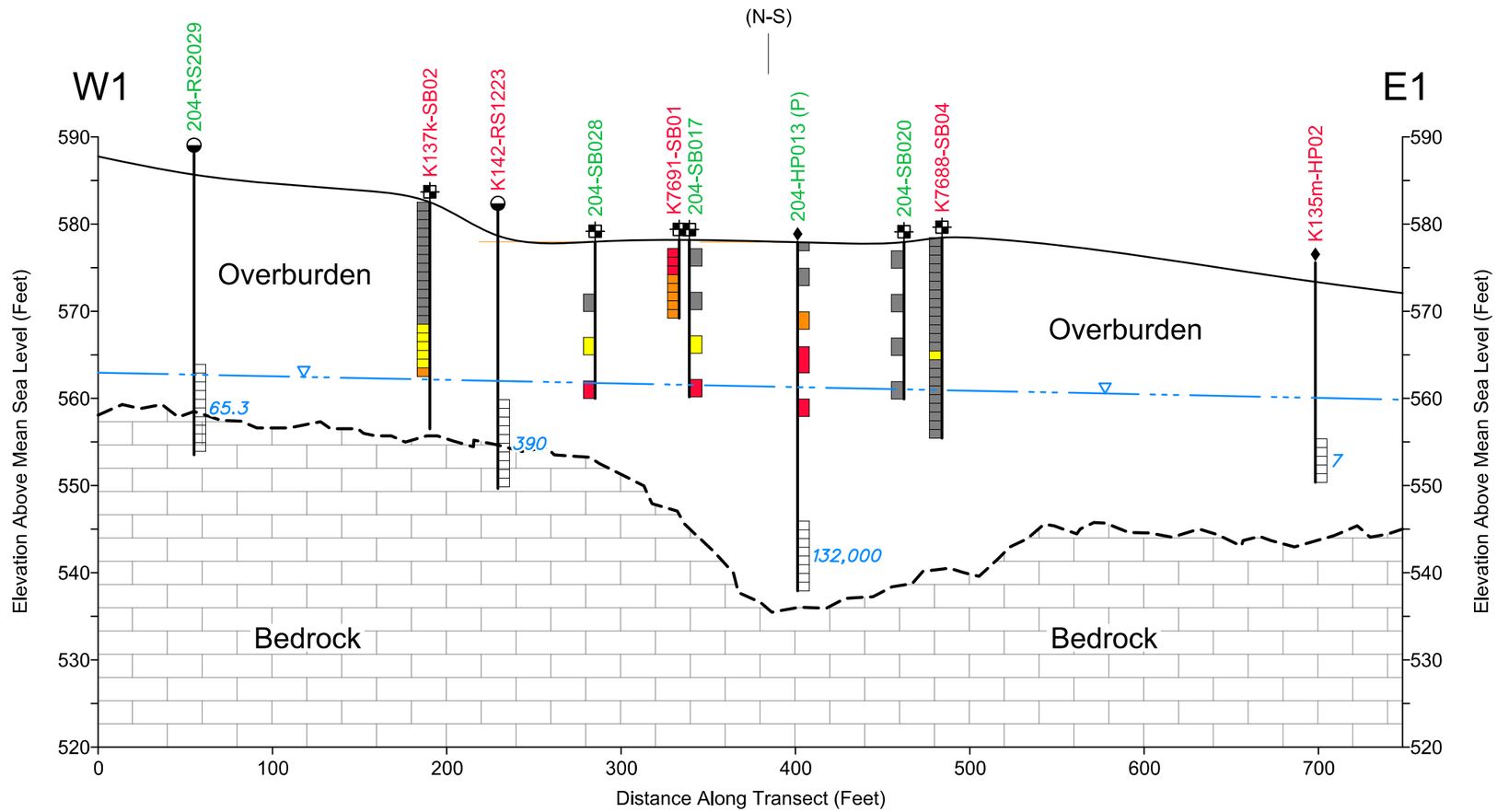

Legend:

204-SB028 — Sample Location

Ground Surface

Soil Sample

Potentiometric Surface (Approx.)

Top of Bedrock

7 — Screened Interval with Perchlorate Concentration in Groundwater (ug/L)

Soil Boring

Hydropunch / Piezometer

Interface Well

(P) Projected

(N-S) Cross-Section Tie Point

Perchlorate Concentrations in Soil (mg/kg):

- Not Detected
- Detected, but <1.7
- >1.7 - <17
- >17

Note:

2001/2002 borings shown in red; 2012 borings shown in green. Other dates are not included.

HORIZONTAL SCALE:

0 80 160 FEET

VERTICAL SCALE (5X HORIZONTAL):

0 16 32 FEET

Figure 2-10
RSA-204
West 1-East 1 Cross-Section

Redstone Arsenal
Madison County, Alabama
Contract No. W91ZLK-09-D-0006

CB&I Federal Services LLC

\\SEIKNXFP02\CADD2\Redstone_PMC\RSA-204\RSA-204 Xsecs.dgn

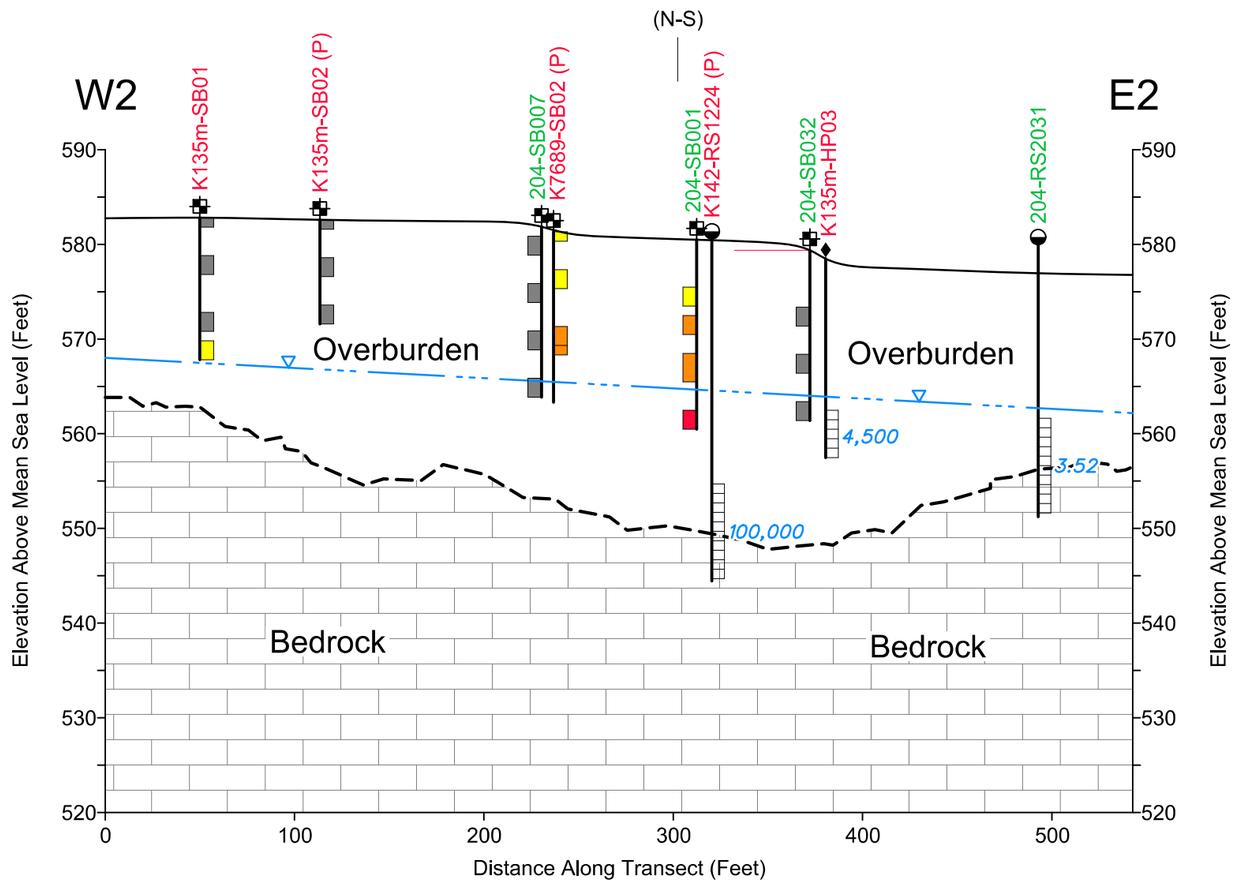

Legend:

204-SB007 — Sample Location

Ground Surface

Soil Sample

Potentiometric Surface (Approx.)

Top of Bedrock

3.52 — Screened Interval with Perchlorate Concentration in Groundwater (ug/L)

Soil Boring

Hydropunch / Piezometer

Interface Well

(P) Projected

(N-S) Cross-Section Tie Point

Perchlorate Concentrations in Soil (mg/kg):

- Not Detected
- Detected, but <1.7
- >1.7 - <17
- >17

Note:

2001/2002 borings shown in red; 2012 borings shown in green. Other dates are not included.

HORIZONTAL SCALE:

0 80 160 FEET

VERTICAL SCALE (5X HORIZONTAL):

0 16 32 FEET

Figure 2-11
RSA-204
West 2-East 2 Cross-Section

Redstone Arsenal
Madison County, Alabama
Contract No. W91ZLK-09-D-0006

CB&I Federal Services LLC

\\SEIKNXFP02\CADD2\Redstone_PMC\RSA-204\RSA-204 Xsecs.dgn

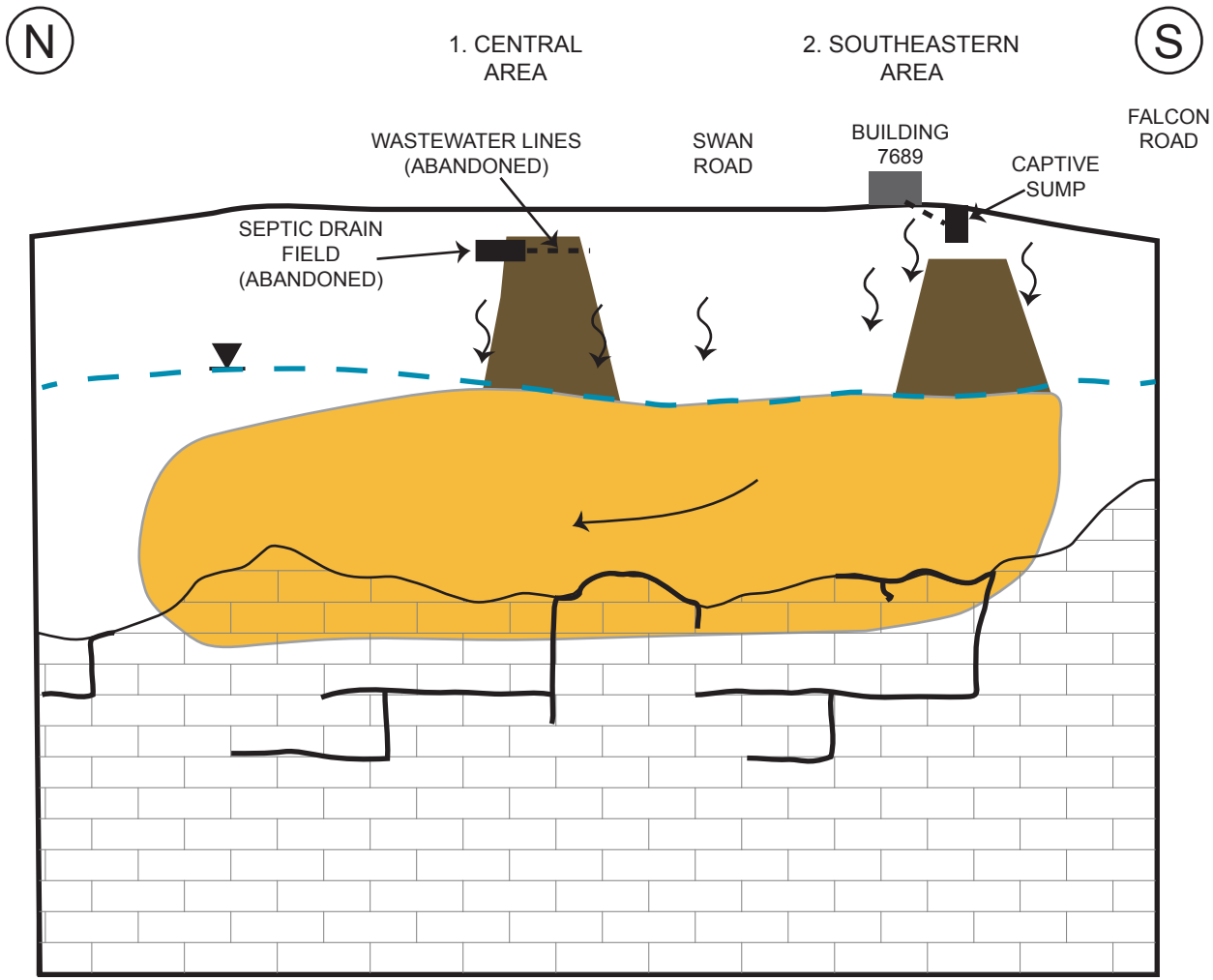

1. CENTRAL AREA SOURCED FROM ABANDONED WASTE WATER COLLECTION LINES/SEPTIC DRAIN FIELD

2. SOUTHEASTERN AREA SOURCED BY PERCHLORATE RELEASES FROM CAPTIVE SUMP

LEGEND

- GROUNDWATER ELEVATION
- AVERAGE WATER LEVEL ELEVATION
- SOIL/OVERBURDEN
- BEDROCK
- PERCHLORATE CONTAMINTATED SOILS
- PERCHLORATE CONTAMINATED GROUNDWATER
- FRACTURES

Figure 2-12

RSA-204

Historical Release Points in Relation to Perchlorate in Soil and Groundwater

Redstone Arsenal
Madison County, Alabama
Contract No. W91ZLK-09-D-0006

Not to Scale

CB&I Federal Services LLC

\\cfsfs01.cfs.com\ArcGISProd3\Redstone\GIS_Documents\Output\RSA_204\RSA_204_CSM.ai

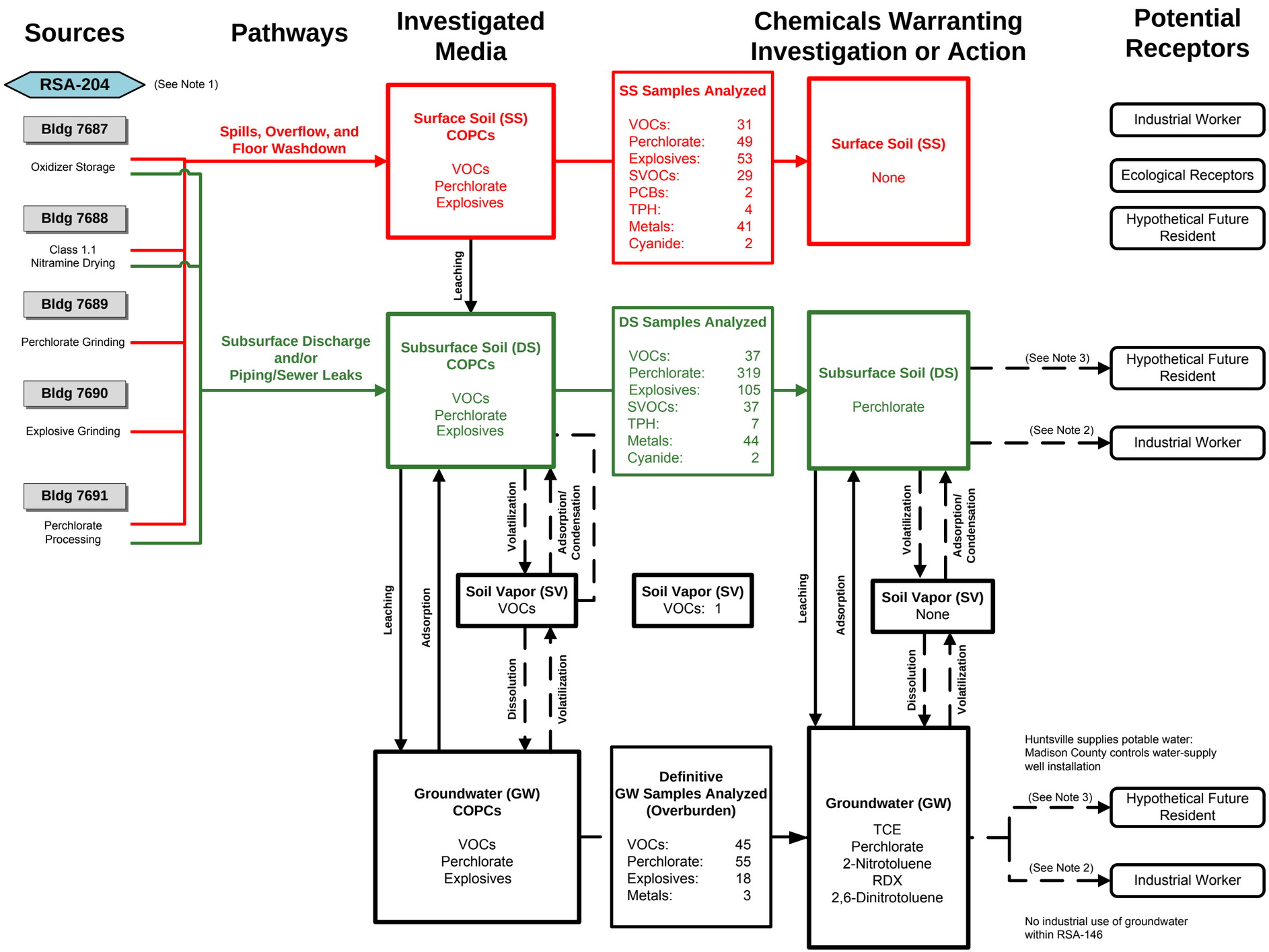

NOTES:

1. The current and anticipated future land use of this area is designated as industrial.
2. At Redstone Arsenal, unmanaged exposure to Installation Restoration Program sites is prevented by the Arsenal's Site Access Control Program. Current and potential future receptors include groundskeepers and construction workers. The residential receptor evaluation will determine if the site is safe for trespassers. Potential future only receptors include sportsmen and hypothetical residential receptors.
3. The hypothetical residential receptor provides the basis for establishing some remedial responses including justification for the selection of land-use controls. Sites that do not exceed acceptable risk limits for a residential receptor can be released for any use without restriction.

ACRONYMS:

COPCs	Chemicals of Potential Concern
PCBs	Polychlorinated Biphenyls
SVOCs	Semivolatile Organic Compounds
TPH	Total Petroleum Hydrocarbon
VOCs	Volatile Organic Compounds
TCE	Trichloroethene

Common acronyms are listed in the report acronyms list.

Figure 2-13

RSA-204
Conceptual Site Model

Redstone Arsenal
Madison County, Alabama
Contract No. W91ZLK-09-D-0006

CB&I Federal Services LLC

\\cfsfs01.cfs.com\arcgisprod3\Redstone\GIS_Documents\Output\RSA_204\RSA_204_CMIP_May2016\Figure_2_13_RSA_204_CSM
S. Signiski

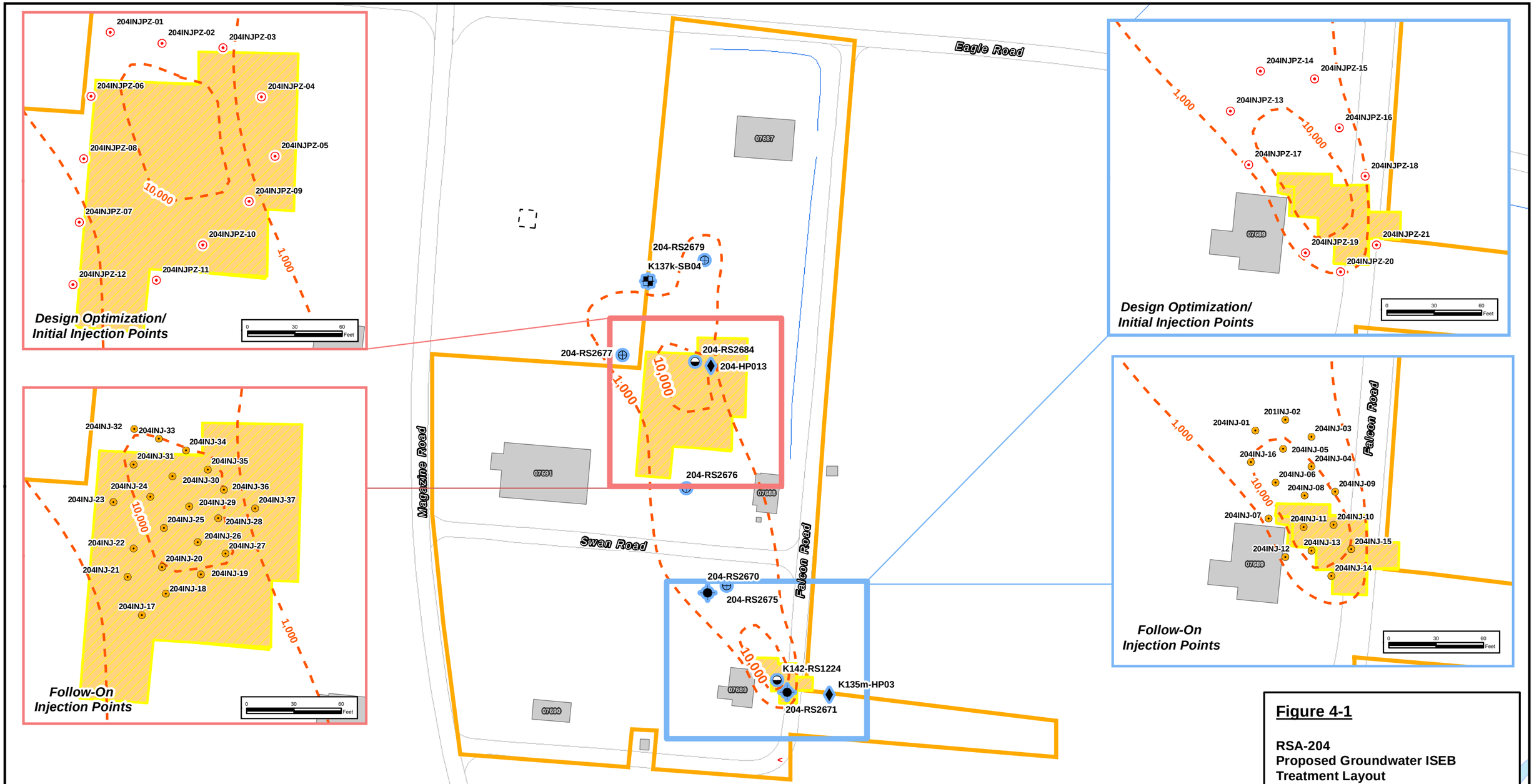

H:\Redstone\GIS_Documents\Project_maps\RSA_204\RSA_204_CMIP_Rev0_Nov2015\RSA_204_Prop_GWTR_ISEB_Treatment_Layout_Map_Rev2.mxd

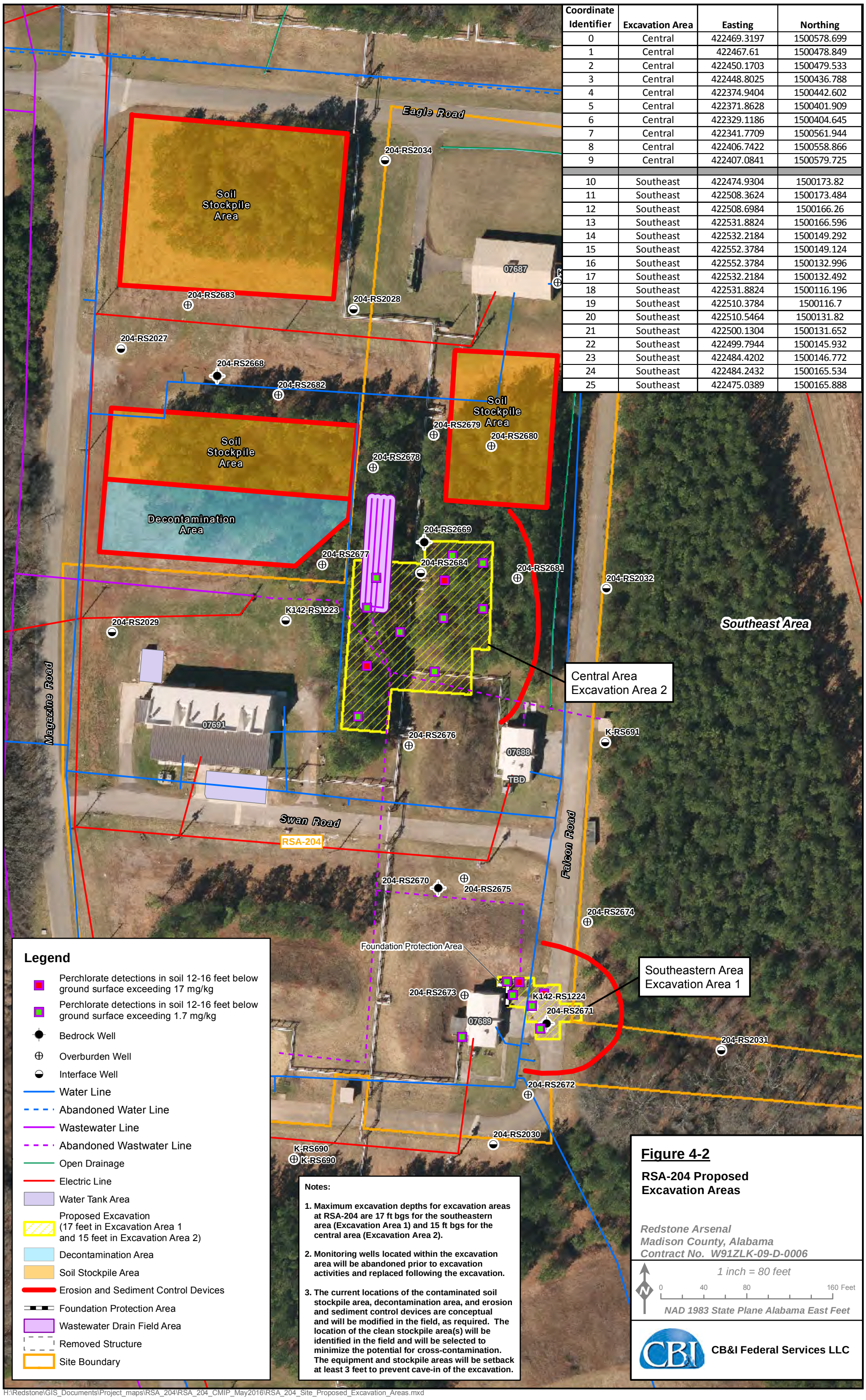

Coordinate Identifier	Excavation Area	Easting	Northing
0	Central	422469.3197	1500578.699
1	Central	422467.61	1500478.849
2	Central	422450.1703	1500479.533
3	Central	422448.8025	1500436.788
4	Central	422374.9404	1500442.602
5	Central	422371.8628	1500401.909
6	Central	422329.1186	1500404.645
7	Central	422341.7709	1500561.944
8	Central	422406.7422	1500558.866
9	Central	422407.0841	1500579.725
10	Southeast	422474.9304	1500173.82
11	Southeast	422508.3624	1500173.484
12	Southeast	422508.6984	1500166.26
13	Southeast	422531.8824	1500166.596
14	Southeast	422532.2184	1500149.292
15	Southeast	422552.3784	1500149.124
16	Southeast	422552.3784	1500132.996
17	Southeast	422532.2184	1500132.492
18	Southeast	422531.8824	1500116.196
19	Southeast	422510.3784	1500116.7
20	Southeast	422510.5464	1500131.82
21	Southeast	422500.1304	1500131.652
22	Southeast	422499.7944	1500145.932
23	Southeast	422484.4202	1500146.772
24	Southeast	422484.2432	1500165.534
25	Southeast	422475.0389	1500165.888

H:\Redstone\GIS_Documents\Project_maps\RSA_204\RSA_204_CMIP_May2016\RSA_204_Site_Proposed_Excavation_Areas.mxd

Eagle Road
204-RS2034
204-RS2033
204-RS2824
07687
K204-RS1550
204-RS2683
204-RS2028
204-RS2027
204-RS2668
204-RS2682
204-RS2679
204-RS2678
204-RS2680
204-RS2677
204-RS2794
204-RS2681
204-RS2032
204-RS2793
1,000
10,000
204-RS2029
K142-RS1223
Excavation Area 2
07691
204-RS2676
K-RS691
07688
RSA-204
Swan Road
Magazine Road
Falcon Road
204-RS2670
204-RS2675
204-RS2674
Excavation Area 1
204-RS2673
204-RS2791
10,000
07689
204-RS2792
204-RS2031
07690
204-RS2672
K-RS690
204-RS2030

Legend

- Proposed Interface Well
- Bedrock Well
- Interface Well
- Overburden Well
- Long Term Monitoring Location
- Proposed Excavation
- Perchlorate Isoconcentration Lines (Perchlorate unit in micrograms per liter dashed where inferred)
- Trichloroethene Isoconcentration Lines (Trichloroethene unit in micrograms per liter dashed where inferred)
- Surface Drainage Features (Some Ephemeral)
- Roads
- Buildings
- Removed Structure
- Site Boundary

Figure 4-3

RSA-204
Long Term Monitoring Locations for Groundwater

Redstone Arsenal
Madison County, Alabama
Contract No. W91ZLK-09-D-0006

1 inch = 100 feet

0 50 100 200 Feet

NAD 1983 State Plane Alabama East Feet

CB&I Federal Services LLC

H:\Redstone\GIS_Documents\Project_maps\RSA_204\RSA_204_CMIP_May2016\RSA_204_Performance_Monitoring_Locations_in_Groundwater.mxd

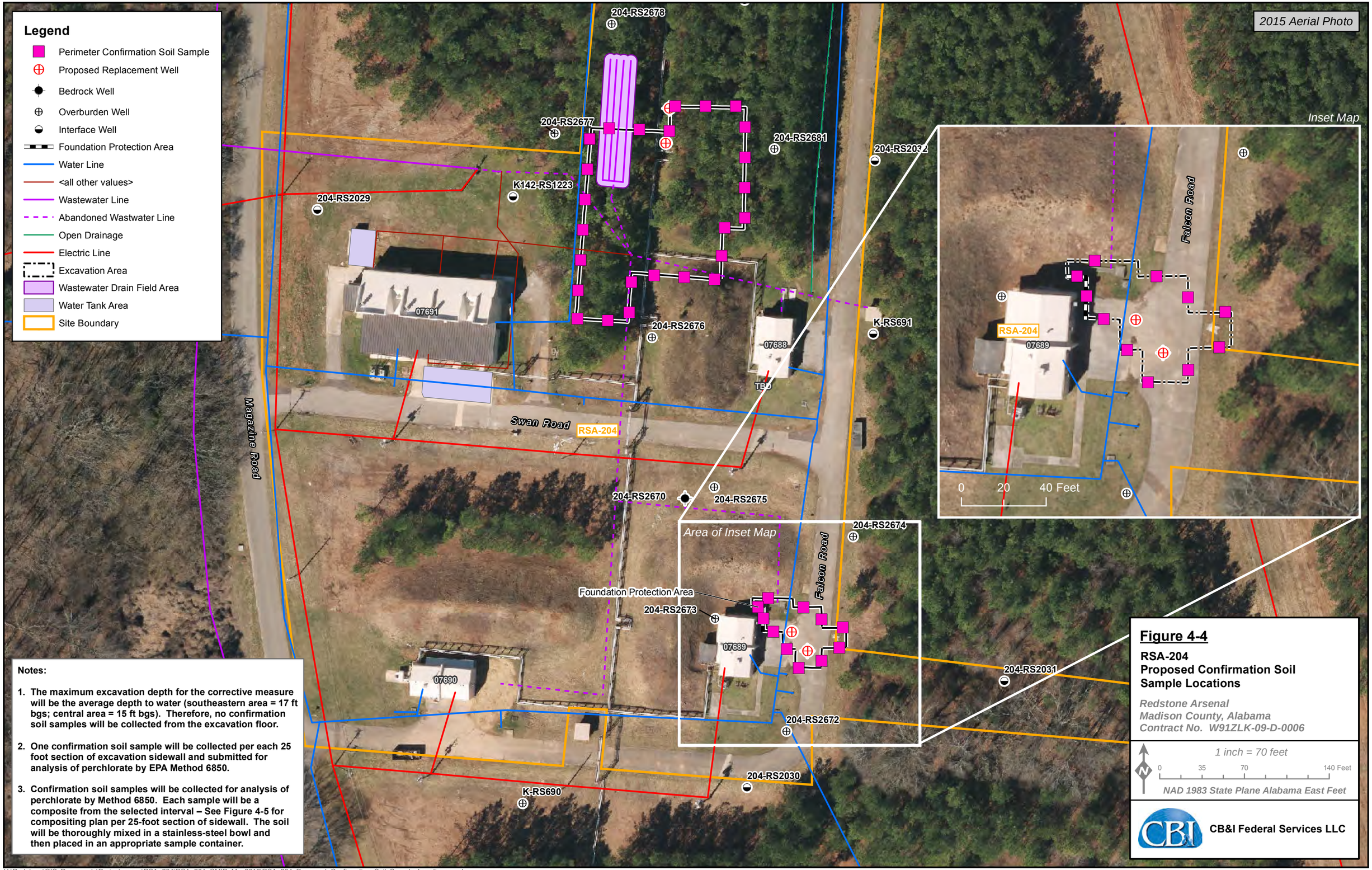

H:\Redstone\GIS_Documents\Project_maps\RSA_204\RSA_204_CMIP_May2016\RSA_204_Proposed_Confirmation_Soil_Sample_Locations.mxd

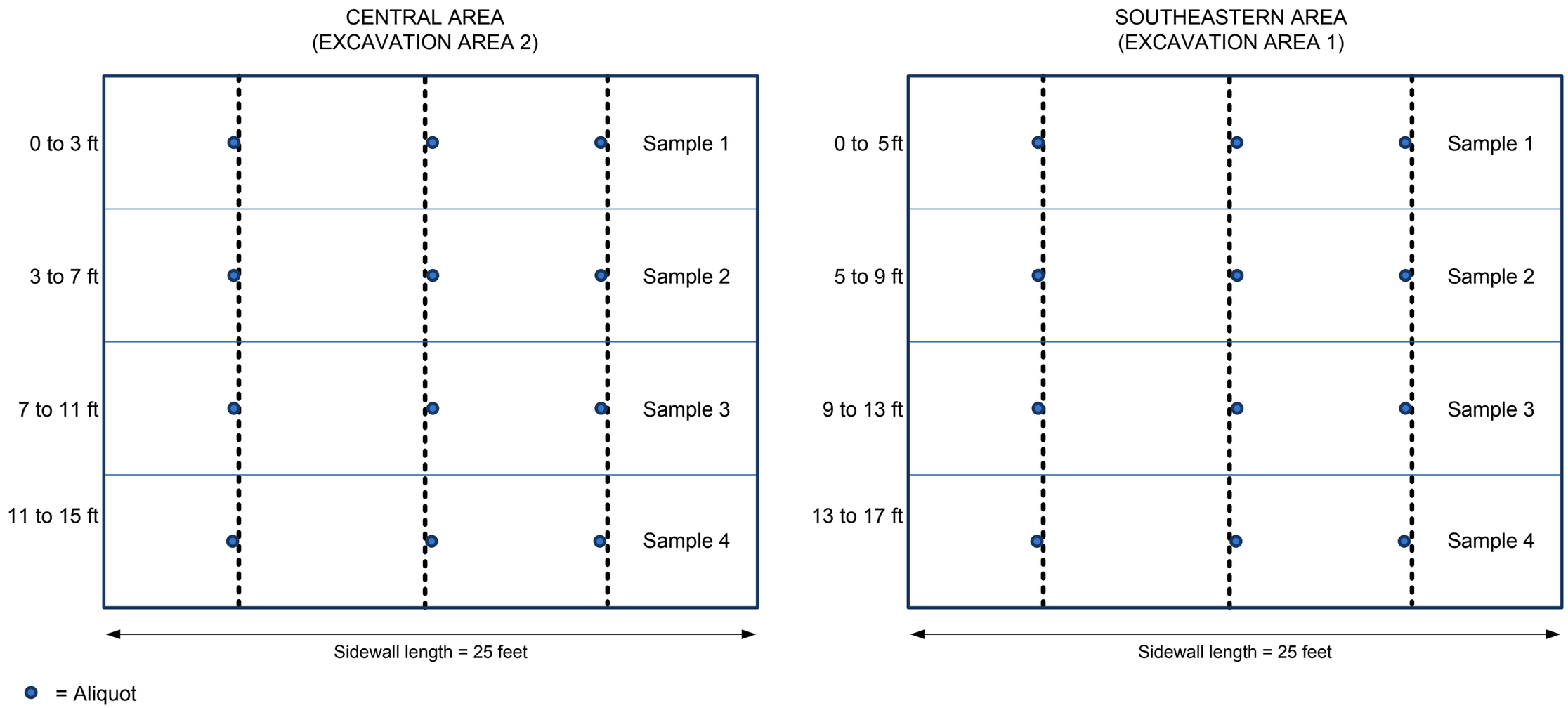

Figure 4-5

RSA-204
Excavation Areas 1 and 2
Sidewall Confirmation Sampling Approach (Perchlorate)

Redstone Arsenal
Madison County, Alabama
Contract No. W91ZLK-09-D-0006

CB&I Federal Services LLC

\\cfsfs01.cfs.com\arcgisprod3\Redstone\GIS_Documents\Output\RSA_204\RSA_204_CMIP_May2016\Figure_4_5_Sidewall_Sampling
S. Signiski

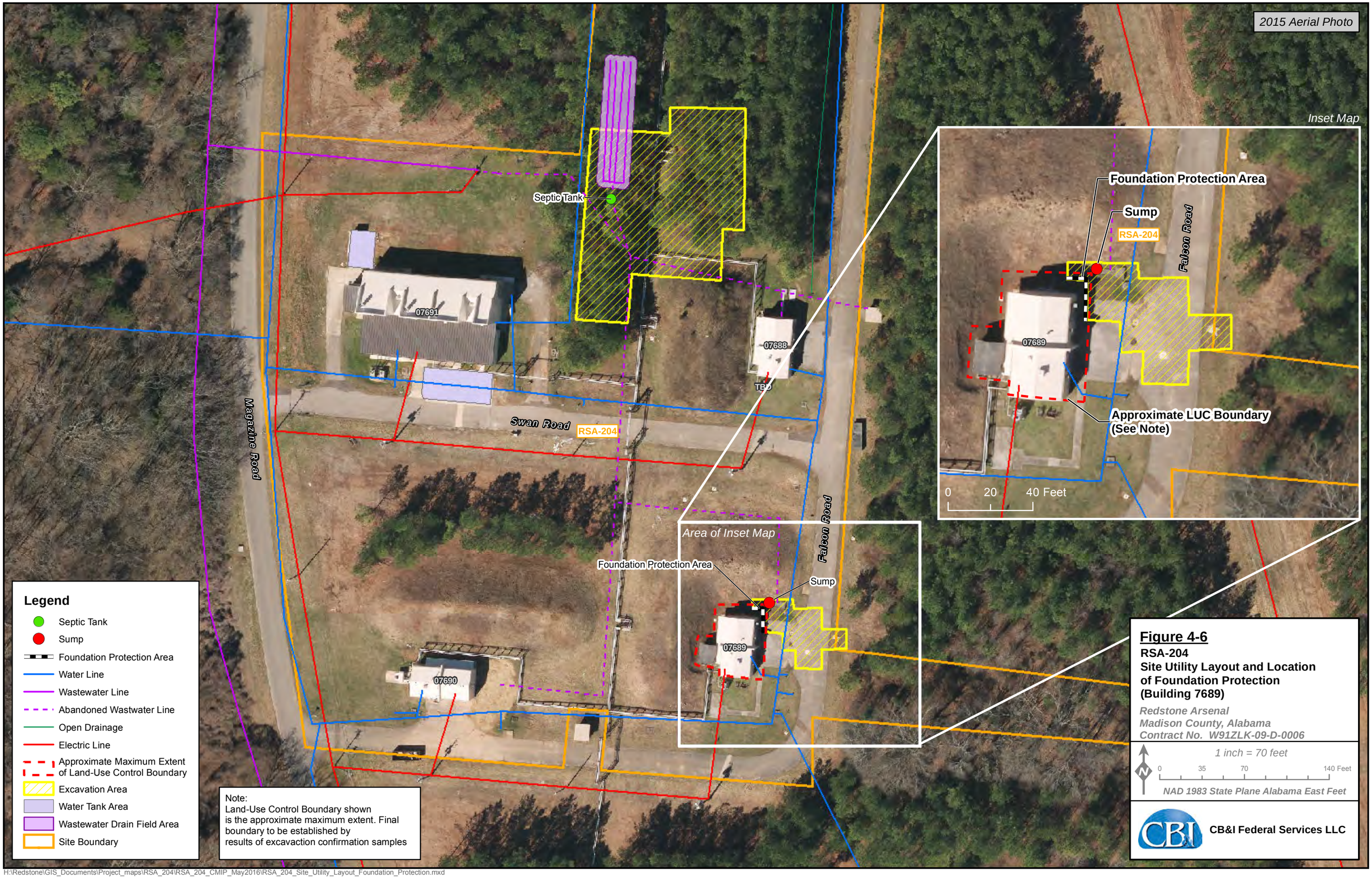

Figure 4-6
RSA-204
Site Utility Layout and Location of Foundation Protection (Building 7689)

Redstone Arsenal
Madison County, Alabama
Contract No. W91ZLK-09-D-0006

H:\Redstone\GIS_Documents\Project_maps\RSA_204\RSA_204_CMIP_May2016\RSA_204_Site_Utility_Layout_Foundation_Protection.mxd

APPENDIX A

SOIL AND GROUNDWATER ANALYTICAL DATA TABLES

Table A1-1

Subsurface Soil Analytical Results (2014)
RSA-204 Corrective Measures Implementation Work Plan
Redstone Arsenal, Madison County, Alabama

			Location Code:	204-SB036		204-SB036		204-SB036		204-SB036		204-SB037		204-SB037		204-SB037		204-SB037	
			Sample No.:	AAR0209		AAR0211		AAR0212		AAR0213		AAR0214		AAR0215		AAR0216		AAR0217	
			Sample Date:	08/21/14		08/21/14		08/21/14		08/21/14		08/20/14		08/20/14		08/20/14		08/20/14	
			Sample Depth (ft bgs):	1 to 3		6 to 8		11 to 13		16 to 18		1 to 3		6 to 8		11 to 13		16 to 18	
			Logging Company:	GSE		GSE		GSE		GSE		GSE		GSE		GSE		GSE	
Parameter	Units	PSV[a]	DAF_4SSL[b]	Result	VQ	Result	VQ	Result	VQ	Result	VQ	Result	VQ	Result	VQ	Result	VQ	Result	VQ
PERCHLORATE																			
Perchlorate	mg/kg	5.5	0.0125	-	-	-	-	**0.338**	**J**	**27.4**		-	-	-	-	**2.17**		**10.7**	

Table A1-1

Subsurface Soil Analytical Results (2014)
RSA-204 Corrective Measures Implementation Work Plan
Redstone Arsenal, Madison County, Alabama

			Location Code:	204-SB038		204-SB038		204-SB038		204-SB038		204-SB039		204-SB039		204-SB039		204-SB039	
			Sample No.:	AAR0218		AAR0219		AAR0220		AAR0221		AAR0222		AAR0223		AAR0225		AAR0226	
			Sample Date:	08/20/14		08/20/14		08/20/14		08/20/14		08/20/14		08/20/14		08/20/14		08/20/14	
			Sample Depth (ft bgs):	1 to 3		6 to 8		11 to 13		16 to 18		1 to 3		6 to 8		11 to 13		16 to 18	
			Logging Company:	GSE		GSE		GSE				GSE		GSE		GSE		GSE	
Parameter	Units	PSV[a]	DAF_4SSL[b]	Result	VQ	Result	VQ	Result	VQ	Result	VQ	Result	VQ	Result	VQ	Result	VQ	Result	VQ
PERCHLORATE																			
Perchlorate	mg/kg	5.5	0.0125	-	-	**0.618**		**1.81**		**1.86**		-	-	**0.18**	**J**	**4.06**		**67.7**	

Table A1-1

Subsurface Soil Analytical Results (2014)
RSA-204 Corrective Measures Implementation Work Plan
Redstone Arsenal, Madison County, Alabama

			Location Code:	204-SB040		204-SB040		204-SB040		204-SB040		204-SB041		204-SB041		204-SB041		204-SB041	
			Sample No.:	AAR0227		AAR0228		AAR0229		AAR0230		AAR0231		AAR0232		AAR0233		AAR0234	
			Sample Date:	08/20/14		08/20/14		08/20/14		08/20/14		08/21/14		08/21/14		08/21/14		08/21/14	
			Sample Depth (ft bgs):	1 to 3		6 to 8		11 to 13		16 to 18		1 to 3		6 to 8		11 to 13		16 to 18	
			Logging Company:	GSE		GSE		GSE		GSE		GSE		GSE		GSE		GSE	
Parameter	Units	PSV[a]	DAF_4SSL[b]	Result	VQ	Result	VQ	Result	VQ	Result	VQ	Result	VQ	Result	VQ	Result	VQ	Result	VQ
PERCHLORATE																			
Perchlorate	mg/kg	5.5	0.0125	-	-	**1.34**		**3.62**		**304**		-	-	**2.18**		**13.1**		**1560**	

Table A1-1

Subsurface Soil Analytical Results (2014)
RSA-204 Corrective Measures Implementation Work Plan
Redstone Arsenal, Madison County, Alabama

			Location Code:	204-SB042		204-SB042		204-SB042		204-SB042		204-SB043		204-SB043		204-SB043		204-SB043	
			Sample No.:	AAR0235		AAR0236		AAR0238		AAR0239		AAR0240		AAR0241		AAR0242		AAR0243	
			Sample Date:	08/21/14		08/21/14		08/21/14		08/21/14		08/20/14		08/20/14		08/20/14		08/20/14	
			Sample Depth (ft bgs):	1 to 3		6 to 8		11 to 13		16 to 18		1 to 3		6 to 8		11 to 13		16 to 18	
			Logging Company:	GSE		GSE		GSE		GSE		GSE		GSE		GSE		GSE	
Parameter	Units	PSV[a]	DAF_4SSL[b]	Result	VQ	Result	VQ	Result	VQ	Result	VQ	Result	VQ	Result	VQ	Result	VQ	Result	VQ
PERCHLORATE																			
Perchlorate	mg/kg	5.5	0.0125	**0.234**	**J**	-	-	**0.295**	**J**	**96.6**		-	-	-	-	-	-	-	-

Table A1-1

Subsurface Soil Analytical Results (2014)
RSA-204 Corrective Measures Implementation Work Plan
Redstone Arsenal, Madison County, Alabama

			Location Code:	204-SB044		204-SB044		204-SB044		204-SB044		204-SB045		204-SB045		204-SB045		204-SB045	
			Sample No.:	AAR0244		AAR0245		AAR0246		AAR0248		AAR0249		AAR0250		AAR0251		AAR0252	
			Sample Date:	08/20/14		08/20/14		08/20/14		08/20/14		08/20/14		08/20/14		08/20/14		08/20/14	
			Sample Depth (ft bgs):	1 to 3		6 to 8		11 to 13		16 to 18		1 to 3		6 to 8		11 to 13		16 to 18	
			Logging Company:	GSE		GSE		GSE		GSE		GSE		GSE		GSE		GSE	
Parameter	Units	PSV[a]	DAF_4SSL[b]	Result	VQ	Result	VQ	Result	VQ	Result	VQ	Result	VQ	Result	VQ	Result	VQ	Result	VQ
PERCHLORATE																			
Perchlorate	mg/kg	5.5	0.0125	-	-	-	-	-	-	**1.04**		-	-	-	-	-	-	-	-

Table A1-1

Subsurface Soil Analytical Results (2014)
RSA-204 Corrective Measures Implementation Work Plan
Redstone Arsenal, Madison County, Alabama

			Location Code:	204-SB046		204-SB046		204-SB046		204-SB046		204-SB047		204-SB047		204-SB047		204-SB047	
			Sample No.:	AAR0253		AAR0254		AAR0255		AAR0256		AAR0257		AAR0258		AAR0259		AAR0260	
			Sample Date:	08/21/14		08/21/14		08/21/14		08/21/14		08/21/14		08/21/14		08/21/14		08/21/14	
			Sample Depth (ft bgs):	1 to 3		6 to 8		11 to 13		16 to 18		1 to 3		6 to 8		11 to 13		16 to 18	
			Logging Company:	GSE		GSE		GSE		GSE		GSE		GSE		GSE		GSE	
Parameter	Units	PSV[a]	DAF_4SSL[b]	Result	VQ	Result	VQ	Result	VQ	Result	VQ	Result	VQ	Result	VQ	Result	VQ	Result	VQ
PERCHLORATE																			
Perchlorate	mg/kg	5.5	0.0125	-	-	-	-	**0.171**	**J**	**2.89**		-	-	-	-	**0.376**	**J**	**10.6**	

Table A1-1

Subsurface Soil Analytical Results (2014)
RSA-204 Corrective Measures Implementation Work Plan
Redstone Arsenal, Madison County, Alabama

			Location Code:	204-SB048		204-SB048		204-SB048		204-SB048		204-SB049		204-SB049		204-SB049	
			Sample No.:	AAR0261		AAR0262		AAR0263		AAR0264		AAR0265		AAR0267		AAR0268	
			Sample Date:	08/21/14		08/21/14		08/21/14		08/21/14		08/21/14		08/21/14		08/21/14	
			Sample Depth (ft bgs):	1 to 3		6 to 8		11 to 13		16 to 18		1 to 3		6 to 8		11 to 13	
			Logging Company:	GSE		GSE		GSE		GSE		GSE		GSE		GSE	
Parameter	Units	PSV[a]	DAF_4SSL[b]	Result	VQ	Result	VQ	Result	VQ	Result	VQ	Result	VQ	Result	VQ	Result	VQ
PERCHLORATE																	
Perchlorate	mg/kg	5.5	0.0125	-	-	-	-	**5.68**		**25.2**		-	-	-	-	**4.54**	

Table A1-1

Subsurface Soil Analytical Results (2014)
RSA-204 Corrective Measures Implementation Work Plan
Redstone Arsenal, Madison County, Alabama

			Location Code:	204-SB049		204-SB050		204-SB050		204-SB050		204-SB050		204-SB051	
			Sample No.:	AAR0269		AAR0270		AAR0271		AAR0272		AAR0273		AAR0274	
			Sample Date:	08/21/14		08/21/14		08/21/14		08/21/14		08/21/14		08/21/14	
			Sample Depth (ft bgs):	16 to 18		1 to 3		6 to 8		11 to 13		16 to 18		1 to 3	
			Logging Company:	GSE		GSE		GSE		GSE		GSE		GSE	
Parameter	Units	PSV[a]	DAF_4SSL[b]	Result	VQ	Result	VQ	Result	VQ	Result	VQ	Result	VQ	Result	VQ
PERCHLORATE															
Perchlorate	mg/kg	5.5	0.0125	**12.1**		**2.84**		**65.9**	**J**	**9.98**		**2.44**		-	-

Table A1-1

Subsurface Soil Analytical Results (2014)
RSA-204 Corrective Measures Implementation Work Plan
Redstone Arsenal, Madison County, Alabama

			Location Code:	204-SB051		204-SB051		204-SB051	
			Sample No.:	AAR0275		AAR0277		AAR0278	
			Sample Date:	08/21/14		08/21/14		08/21/14	
			Sample Depth (ft bgs):	6 to 8		11 to 13		16 to 18	
			Logging Company:	GSE		GSE		GSE	
Parameter	Units	PSV[a]	DAF_4SSL[b]	Result	VQ	Result	VQ	Result	VQ
PERCHLORATE									
Perchlorate	mg/kg	5.5	0.0125	-	-	-	-	-	-

Table A1-1

Subsurface Soil Analytical Results (2014)
RSA-204 Corrective Measures Implementation Work Plan
Redstone Arsenal, Madison County, Alabama

Bold font indicates detection above PSV or DAF_4 SSL.

"-" - Indicates the parameter was not detected.
DAF - Dilution attenuation factor.
ft bgs - Feet below ground surface.
mg/kg - Milligrams per kilogram.
NA - Screening value not available; value not applicable; or not analyzed for parameter.
PSV - Preliminary screening value.
SSL - Soil screening level.
VQ - Validation qualifier.
J - Estimated.

[a] Residential soil preliminary screening values (PSV).
The EPA regional screening levels for residential soil are adopted as the Redstone-specific PSVs and are adjusted, if necessary, to reflect an incremental lifetime cancer risk of 1E-6 or a hazard index of 0.1 (EPA, 2014, *Regional Screening Levels for Chemical Contaminants at Superfund Sites,* Mid-Atlantic Risk Assessment, May).

[b] Redstone-specific dilution attenuation factor 4 soil screening levels (DAF_4 SSL).
Shaw Environmental, Inc. (Shaw), 2011, *Development of a Facility-Wide Dilution Attenuation Factor and Process for Evaluating Migration from Soil to Groundwater, Redstone Arsenal, Huntsville, Alabama, U.S. Army Garrison-Redstone, Madison County, Alabama, February,* as updated based on current EPA 2012 maximum contaminant levels (if available) or EPA May 2014 tap water RSLs.
References:

1) Maximum Contaminant Levels (EPA, 2012, *2012 Edition of the Drinking Water Standards and Health Advisories* , EPA 822-S-12-001, Office of Water, Washington, District of Columbia, April).

2) Tap water regional screening levels, adjusted, if necessary to reflect an incremental lifetime cancer risk of 1E-6 or a hazard index of 0.1 (EPA, 2014, *Regional Screening Levels for Chemical Contaminants at Superfund Sites* , Mid-Atlantic Risk Assessment, May).

Table A1-2

Definitive Groundwater Analytical Results (2014)
RSA-204 Corrective Measures Implementation Work Plan
Redstone Arsenal, Madison County, Alabama

		Location Code:	204-RS2027		204-RS2028		204-RS2029		204-RS2030		204-RS2031		204-RS2032		204-RS2033		204-RS2034	
		Sample No.:	AAR3048		AAR3049		AAR3051		AAR3052		AAR3053		AAR3054		AAR3055		AAR3056	
		Sample Date:	9-Dec-14		9-Dec-14		10-Dec-14		8-Dec-14		8-Dec-14		10-Dec-14		9-Dec-14		9-Dec-14	
		Sample Depth (ft btoc):	31.5 to 31.5		26 to 26		30 to 30		23.1 to 23.1		20.8 to 20.8		25.9 to 25.9		37.7 to 37.7		21 to 21	
		Logging Company:	GSE		GSE		GSE		GSE		GSE		GSE		GSE		GSE	
		Zone:	INT		INT		INT		INT		INT		INT		INT		INT	
Parameter	Units	PSV[a]	Result	VQ	Result	VQ	Result	VQ	Result	VQ	Result	VQ	Result	VQ	Result	VQ	Result	VQ
DHC-PCR																		
Dehalococcoides spp.	c/ml	NA	-	-	-	-	23.8	nv	-	-	-	-	66.7	nv	-	-	-	-
FIELD TESTS																		
Alkalinity (as CaCO3)	µg/L	NA	260000		180000		260000		340000		400000		200000		119000		272000	
Conductivity	mS/cm	NA	0.463		0.246		0.539		0.604		0.488		0.29		0.339		0.625	
Dissolved Oxygen	mg/L	NA	0.43		3.28		2.79		3.34		0		5.15		10.62		0.08	
Ferrous iron	µg/L	NA	0		0		0		0		100		0		0		0	
Oxidation-Reduction Potential	mV	NA	122		144		171		12		121		129		160		149	
pH	Std Unit	NA	7.06		6.4		6.7		6.81		6.56		6.79		7.13		6.65	
Temperature	°C	NA	14.88		16.19		13.3		15.75		13.36		13.77		11.66		13.54	
Turbidity	NTU	NA	9.44		4.71		9.7		0		9.6		5.56		9.8		1.02	
GASES																		
Ethane	µg/L	NA	-	-	-	-	-	-	-	-	-	-	-	-	-	-	-	-
Ethylene	µg/L	NA	-	-	-	-	-	-	-	-	-	-	-	-	-	-	-	-
Methane	µg/L	NA	-	-	-	-	-	-	-	-	-	-	25.6		-	-	-	-
GENERAL CHEMISTRY																		
Nitrate	µg/L	10000	468	UB	1160	UB	2500	UB	49.8	UB	228	UB	399	UB	482	UB	2730	UB
Sulfate	µg/L	NA	11800		9460		7160		5270		8510		1170	UB	11600		1390	UB
PERCHLORATE																		
Perchlorate	µg/L	15	**202**		**297**		**385**		-	-	-	-	5.81	J	7.67	J	**42.6**	
TOC																		
Total Organic Carbon	µg/L	NA	-	-	-	-	-	-	-	-	-	-	-	-	-	-	-	-
VOLATILES																		
1,1,1-Trichloroethane	µg/L	200	0.404	J	-	-	-	-	-	-	-	-	-	-	-	-	-	-
1,1-Dichloroethane	µg/L	2.7	0.831	J	-	-	-	-	-	-	-	-	-	-	-	-	-	-
2-Butanone	µg/L	560	-	-	-	-	-	-	-	-	-	-	-	-	-	-	-	-
Acetone	µg/L	1400	-	-	-	-	-	-	-	-	-	-	3.48	UB	-	-	-	-
Carbon disulfide	µg/L	81	-	-	-	-	-	-	-	-	-	-	-	-	-	-	-	-
Chloroform	µg/L	80	16.9	UB	10.1	UB	1.96	UB	-	-	-	-	0.914	UB	48	UB	-	-
Chloromethane	µg/L	19	-	-	0.597	J	-	-	-	-	-	-	-	-	-	-	-	-
cis-1,2-Dichloroethene	µg/L	70	0.574	J	1.01		-	-	-	-	-	-	-	-	-	-	-	-
Freon 113	µg/L	5500	-	-	-	-	-	-	-	-	-	-	-	-	-	-	-	-
Methylene chloride	µg/L	5	-	-	-	-	-	-	-	-	-	-	-	-	-	-	-	-
Toluene	µg/L	1000	-	-	-	-	-	-	-	-	-	-	-	-	-	-	-	-
Trichloroethene	µg/L	5	1.12		3.29		0.397	J	-	-	-	-	-	-	-	-	-	-

Table A1-2

Definitive Groundwater Analytical Results (2014)
RSA-204 Corrective Measures Implementation Work Plan
Redstone Arsenal, Madison County, Alabama

		Location Code:	204-RS2668		204-RS2669		204-RS2670		204-RS2671		204-RS2672		204-RS2673		204-RS2674		204-RS2675	
		Sample No.:	AAR3029		AAR3030		AAR3032		AAR3033		AAR3034		AAR3035		AAR3036		AAR3037	
		Sample Date:	10-Dec-14		10-Dec-14		9-Dec-14		8-Dec-14		8-Dec-14		9-Dec-14		8-Dec-14		9-Dec-14	
		Sample Depth (ft btoc):	53 to 53		57.5 to 57.5		49.26 to 49.26		59.9 to 59.9		24.5 to 24.5		24.3 to 24.3		24.9 to 24.9		27.4 to 27.4	
		Logging Company:	GSE		GSE		GSE		GSE		GSE		GSE		GSE		GSE	
		Zone:	BR		BR		BR		BR		INT		INT		INT		OVB	
Parameter	Units	PSV[a]	Result	VQ	Result	VQ	Result	VQ	Result	VQ	Result	VQ	Result	VQ	Result	VQ	Result	VQ
DHC-PCR																		
Dehalococcoides spp.	c/ml	NA	2.9	nv	5.8	nv	-	-	170	nv	-	-	-	-	-	-	-	-
FIELD TESTS																		
Alkalinity (as CaCO3)	µg/L	NA	170000		200000		200000		240000		260000		260000		400000		400000	
Conductivity	mS/cm	NA	0.419		0.348		421		0.333		0.628		0.503		0.352		0.343	
Dissolved Oxygen	mg/L	NA	0		0		1.03		0		1.81		1.48		0.03		0	
Ferrous iron	µg/L	NA	800		200		400		100		1500		500		100		0	
Oxidation-Reduction Potential	mV	NA	-124		-163		-177		-166		-132		-73		-141		75	
pH	Std Unit	NA	6.69		7.35		6.99		7.51		6.89		6.92		7.11		6.91	
Temperature	°C	NA	7.94		11.58		13.94		17.1		15.05		14.16		17.05		14.73	
Turbidity	NTU	NA	0		14.2		13		4.33		1.4		7.41		0		0	
GASES																		
Ethane	µg/L	NA	1.64	J	-	-	1.73	J	-	-	-	-	-	-	-	-	-	-
Ethylene	µg/L	NA	2.33	J	-	-	-	-	-	-	-	-	-	-	-	-	-	-
Methane	µg/L	NA	-	-	-	-	8.43		3.37	J	4.02		-	-	-	-	-	-
GENERAL CHEMISTRY																		
Nitrate	µg/L	10000	-	-	174	UB	519	UB	445	UB	112	UB	144	UB	-	-	497	UB
Sulfate	µg/L	NA	11300		3530	UB	9040		5630		2110	UB	4010	UB	3480	UB	5540	
PERCHLORATE																		
Perchlorate	µg/L	15	2.58	J	**927**		**2710**		4.11	J	-	-	**153**		13.1		**1470**	
TOC																		
Total Organic Carbon	µg/L	NA	4190		-	-	-	-	-	-	1340	J	1440	J	1950	J	-	-
VOLATILES																		
1,1,1-Trichloroethane	µg/L	200	-	-	-	-	-	-	-	-	-	-	-	-	-	-	-	-
1,1-Dichloroethane	µg/L	2.7	-	-	-	-	-	-	-	-	-	-	-	-	-	-	-	-
2-Butanone	µg/L	560	-	-	-	-	-	-	-	-	-	-	-	-	-	-	-	-
Acetone	µg/L	1400	58.1	UB	69.7	UB	-	-	10.7	UB	-	-	6.77	UB	51.4	UB	-	-
Carbon disulfide	µg/L	81	0.592	J	-	-	-	-	-	-	0.422	J	-	-	-	-	-	-
Chloroform	µg/L	80	3.25	UB	1.7	UB	2.57	UB	0.335	UB	-	-	0.466	UB	-	-	-	-
Chloromethane	µg/L	19	-	-	-	-	-	-	-	-	-	-	-	-	-	-	-	-
cis-1,2-Dichloroethene	µg/L	70	-	-	-	-	0.902	J	-	-	-	-	-	-	-	-	-	-
Freon 113	µg/L	5500	-	-	-	-	8.02		-	-	-	-	57.8		-	-	49.5	
Methylene chloride	µg/L	5	-	-	-	-	-	-	-	-	-	-	0.607	J	-	-	-	-
Toluene	µg/L	1000	-	-	0.405	J	0.437	J	-	-	-	-	-	-	-	-	-	-
Trichloroethene	µg/L	5	-	-	1.14		2.49		4.51		-	-	1.25		-	-	-	-

Table A1-2

Definitive Groundwater Analytical Results (2014)
RSA-204 Corrective Measures Implementation Work Plan
Redstone Arsenal, Madison County, Alabama

		Location Code:	204-RS2676		204-RS2677		204-RS2678		204-RS2679		204-RS2680		204-RS2681		204-RS2682		204-RS2683	
		Sample No.:	AAR3039		AAR3040		AAR3041		AAR3042		AAR3043		AAR3044		AAR3045		AAR3046	
		Sample Date:	9-Dec-14		10-Dec-14		10-Dec-14		10-Dec-14		10-Dec-14		9-Dec-14		10-Dec-14		9-Dec-14	
		Sample Depth (ft btoc):	20.3 to 20.3		26 to 26		25.5 to 25.5		21.6 to 21.6		24.3 to 24.3		19.8 to 19.8		22.6 to 22.6		25.9 to 25.9	
		Logging Company:	GSE		GSE		GSE		GSE		GSE		GSE		GSE		GSE	
		Zone:	OVB		OVB		OVB		OVB		INT		OVB		OVB		OVB	
Parameter	Units	PSV[a]	Result	VQ	Result	VQ	Result	VQ	Result	VQ	Result	VQ	Result	VQ	Result	VQ	Result	VQ
DHC-PCR																		
Dehalococcoides spp.	c/ml	NA	-	-	8.4	nv	9.7	nv	18	nv	22.7	nv	-	-	19.8	nv	-	-
FIELD TESTS																		
Alkalinity (as CaCO3)	µg/L	NA	260000		140000		240000		153000		280000		400000		280000		221000	
Conductivity	mS/cm	NA	0.441		0.467		0.386		0.376		0.279		0.361		0.411		0.417	
Dissolved Oxygen	mg/L	NA	1.44		0.66		1.58		3		2.85		0		1.32		5.38	
Ferrous iron	µg/L	NA	0		0		200		0		100		1000		500		0	
Oxidation-Reduction Potential	mV	NA	78		186		80		25		93		-147		-113		103	
pH	Std Unit	NA	6.49		6.15		6.83		7.25		7.09		6.51		6.67		6.69	
Temperature	°C	NA	16.09		12.3		14.1		10.95		13.3		14.59		13.76		11.98	
Turbidity	NTU	NA	12.6		0.64		1.17		0		1.17		2.88		0.12		0	
GASES																		
Ethane	µg/L	NA	-	-	-	-	-	-	-	-	-	-	-	-	-	-	-	-
Ethylene	µg/L	NA	-	-	-	-	-	-	-	-	-	-	-	-	-	-	-	-
Methane	µg/L	NA	-	-	-	-	-	-	-	-	-	-	3.34	J	-	-	-	-
GENERAL CHEMISTRY																		
Nitrate	µg/L	10000	1000	UB	1020	UB	1260	UB	1110	UB	515	UB	151	UB	674	UB	653	UB
Sulfate	µg/L	NA	6010		8860		9670		3740	UB	2270	UB	2180	UB	12200		15300	
PERCHLORATE																		
Perchlorate	µg/L	15	**3390**		**1050**		**867**		**2540**		10		10		**274**		**126**	
TOC																		
Total Organic Carbon	µg/L	NA	-	-	-	-	-	-	-	-	-	-	2490	J	-	-	-	-
VOLATILES																		
1,1,1-Trichloroethane	µg/L	200	-	-	-	-	-	-	-	-	-	-	-	-	-	-	-	-
1,1-Dichloroethane	µg/L	2.7	-	-	-	-	-	-	-	-	-	-	-	-	-	-	-	-
2-Butanone	µg/L	560	-	-	-	-	-	-	-	-	-	-	-	-	-	-	-	-
Acetone	µg/L	1400	-	-	-	-	-	-	8.74	UB	-	-	22.3	UB	3.94	UB	-	-
Carbon disulfide	µg/L	81	-	-	-	-	-	-	-	-	-	-	-	-	-	-	-	-
Chloroform	µg/L	80	-	-	8.94	UB	9.42	UB	2.21	UB	2.92	UB	1.61	UB	17.5	UB	25.8	UB
Chloromethane	µg/L	19	-	-	-	-	-	-	-	-	-	-	-	-	-	-	-	-
cis-1,2-Dichloroethene	µg/L	70	-	-	0.94	J	1.6		-	-	-	-	-	-	0.439	J	0.326	J
Freon 113	µg/L	5500	-	-	-	-	-	-	-	-	-	-	-	-	-	-	-	-
Methylene chloride	µg/L	5	-	-	-	-	-	-	-	-	-	-	-	-	-	-	-	-
Toluene	µg/L	1000	-	-	-	-	-	-	-	-	-	-	-	-	-	-	-	-
Trichloroethene	µg/L	5	-	-	3.68		4.8		-	-	-	-	-	-	1.38		**11.3**	

Table A1-2

Definitive Groundwater Analytical Results (2014)
RSA-204 Corrective Measures Implementation Work Plan
Redstone Arsenal, Madison County, Alabama

		Location Code:	204-RS2684		K142-RS1223		K142-RS1224		K204-RS1550		K-RS690		K-RS691	
		Sample No.:	AAR3047		AAR3059		AAR3060		AAR3061		AAR3057		AAR3058	
		Sample Date:	10-Dec-14		10-Dec-14		8-Dec-14		9-Dec-14		8-Dec-14		8-Dec-14	
		Sample Depth (ft btoc):	21.2 to 21.2		25.5 to 25.5		30.7 to 30.7		21 to 21		21.5 to 21.5		19.85 to 19.85	
		Logging Company:	GSE		GSE		GSE		GSE		GSE		GSE	
		Zone:	INT		INT		INT		OVB		OVB		INT	
Parameter	Units	PSV[a]	Result	VQ	Result	VQ	Result	VQ	Result	VQ	Result	VQ	Result	VQ
DHC-PCR														
Dehalococcoides spp.	c/ml	NA	19.5	nv	30.6	nv	-	-	-	-	-	-	-	-
FIELD TESTS														
Alkalinity (as CaCO3)	µg/L	NA	260000		204000		400000		100000		400000		400000	
Conductivity	mS/cm	NA	0.544		0.498		0.494		0.182		0.307		0.072	
Dissolved Oxygen	mg/L	NA	0.21		3.97		4.75		0		0		6.08	
Ferrous iron	µg/L	NA	0		0		100		100		1000		100	
Oxidation-Reduction Potential	mV	NA	35		189		118		132		-70		174	
pH	Std Unit	NA	6.91		6.44		6.56		6.14		6.41		5.6	
Temperature	°C	NA	10.93		12.51		15.04		14.66		15.07		16	
Turbidity	NTU	NA	0		0		2.54		6.17		0		0	
GASES														
Ethane	µg/L	NA	-	-	-	-	-	-	-	-	-	-	-	-
Ethylene	µg/L	NA	-	-	-	-	-	-	-	-	-	-	-	-
Methane	µg/L	NA	-	-	-	-	2.54	J	-	-	1410		-	-
GENERAL CHEMISTRY														
Nitrate	µg/L	10000	5840		1410	UB	**10400**		766	UB	-	-	552	UB
Sulfate	µg/L	NA	5860		9180		1680	UB	1180	UB	-	-	858	UB
PERCHLORATE														
Perchlorate	µg/L	15	**42800**		**528**		**98300**		**78**		11.5		8.51	J
TOC														
Total Organic Carbon	µg/L	NA	-	-	-	-	-	-	-	-	-	-	-	-
VOLATILES														
1,1,1-Trichloroethane	µg/L	200	-	-	-	-	-	-	-	-	-	-	-	-
1,1-Dichloroethane	µg/L	2.7	-	-	-	-	-	-	-	-	-	-	-	-
2-Butanone	µg/L	560	-	-	-	-	-	-	-	-	33.2		-	-
Acetone	µg/L	1400	3.84	UB	-	-	-	-	-	-	37.5	UB	-	-
Carbon disulfide	µg/L	81	-	-	-	-	-	-	-	-	-	-	-	-
Chloroform	µg/L	80	0.834	UB	11.9	UB	-	-	0.457	UB	-	-	1.2	UB
Chloromethane	µg/L	19	-	-	-	-	-	-	-	-	-	-	-	-
cis-1,2-Dichloroethene	µg/L	70	-	-	0.579	J	-	-	-	-	-	-	-	-
Freon 113	µg/L	5500	-	-	-	-	-	-	-	-	-	-	-	-
Methylene chloride	µg/L	5	-	-	-	-	-	-	-	-	-	-	-	-
Toluene	µg/L	1000	-	-	-	-	-	-	-	-	-	-	-	-
Trichloroethene	µg/L	5	3.79		2.03		0.485	J	0.663	J	-	-	-	-

Table A1-2

Definitive Groundwater Analytical Results (2014)
RSA-204 Corrective Measures Implementation Work Plan
Redstone Arsenal, Madison County, Alabama

Bold font indicates detection above PSV.

"-" - Not detected.
ft btoc - Feet below top of casing.
µg/L - Micrograms per liter.
NA (PSV column) - Not applicable or not available.
NA (Result column) - Not analyzed.
OVB - Overburden well.
INT - Interface well.
BR - Bedrock well.
VQ - Validation Qualifier.
J- Estimated.
UB - Potential blank contamination.

[a] The Redstone-specific preliminary screening levels (PSV) for groundwater are determined by the following hierarchy:
1) Maximum contaminant levels (EPA, 2012, *2012 Edition of the Drinking Water Standards and Health Advisories* , EPA 822-S-12-001, Office of Water, Washington, District of Columbia, April).
2) Tap water regional screening levels, adjusted, if necessary to reflect an incremental lifetime cancer risk of 1E-6 or a hazard index of 0.1
(EPA, 2014, *Regional Screening Levels for Chemical Contaminants at Superfund Sites,* Mid-Atlantic Risk Assessment, May).

APPENDIX B

REQUEST FOR PERMIT MODIFICATION

REQUEST FOR PERMIT MODIFICATION
FOR
RSA-204, OXIDIZER FACILITY, BUILDING 7691, OPERABLE UNIT 10
U.S. ARMY GARRISON – REDSTONE
MADISON COUNTY, ALABAMA
SEPTEMBER 2016

1.0 Introduction

As specified in Section VI.E.3 of the U.S. Army Garrison – *Redstone Arsenal's Alabama Hazardous Wastes Management and Minimization Act Hazardous Waste Storage Facility, Thermal Treatment, Solid Waste Management Unit Corrective Action Permit, Modification No.* 8 (hereafter referred to as the Permit) (last modified on June 3, 2016) (Alabama Department of Environmental Management [ADEM], 2016), a request for permit modification is to be submitted along with a corrective measures implementation (CMI) work plan. The Army has been directed to include this request for permit modification in an appendix to the CMI work plan. Therefore, this request for modification to the Permit has been prepared for Solid Waste Management Unit (SWMU) RSA-204, Oxidizer Facility, Building 7691, Operable Unit (OU) 10, at Redstone Arsenal (RSA) in Madison County, Alabama. The Resource Conservation and Recovery Act (RCRA) facility investigation (RFI) report for RSA-204 was approved by ADEM on March 4, 2014 (Shaw, 2013a). Attachment 1 contains the ADEM concurrence letter for the RFI report. The Army has prepared the CMI work plan and is ready to implement corrective measures for soil and groundwater at RSA-204.

As part of the RFI report, the Army requested that ADEM move this site from Table VI.2 to Table VI.6 in the Permit and list it as requiring corrective measures for soil/surface media and groundwater as part of RSA-204. ADEM subsequently moved RSA-204 to Table VI.6 in Permit Modification No. 5 (ADEM, 2015).

As specified in Section VI.E.3 of the Permit, this modification will serve to incorporate the proposed remedy, including all procedures necessary to implement and monitor the final corrective measures for this site, into the Permit in accordance with Alabama Administrative Code R. 335-14-8-.04(2).

2.0 Facility and Site Description

RSA is located in the southwestern portion of Madison County, which is in the northern portion of Alabama. RSA occupies approximately 38,300 acres and is approximately 10 miles long from

north to south and 6 miles wide from east to west. The Army controls 36,459 acres of the total acreage, of which approximately 15,500 acres are woodlands, 5,360 acres are leased for agricultural use, and approximately 12,000 acres are managed as military test areas/ranges.

RSA-204 is a former oxidizer facility located in the former North Plant area in the southeastern portion of RSA. The former North Plant area was previously used by Thiokol Corporation for rocket motor testing and production. Groundwater beneath RSA-204 is part of the RSA-146 groundwater unit (Figure 1-1 in the CMI work plan).

RSA-204 occupies approximately 8.5 acres south of Eagle Road, between Magazine and Falcon Roads in Test Area 10 (Figure 1-2 in the CMI work plan). The site includes existing Buildings 7687, 7688, 7689, 7690, and 7691. Oxidizer (ammonium perchlorate) was received at the service facility (Building 7687) and explosives (HMX and RDX) were dried at Building 7688. The oxidizer and explosives were transported to the grinding and processing facilities (Buildings 7689, 7690, and 7691), where they were screened and ground. Following processing, the oxidizer powder was transported to nearby mixing facilities. The entire operation was deactivated between 1993 and 1996. Nine no-further-action surface media sites (RSA-135m, RSA-137j, RSA-137k, RSA-137l, RSA-138j, RSA-138k, RSA-138l, RSA-180, and RSA-181) consisting of sumps and temporary storage areas also lie within RSA-204 (ADEM, 2016).

The conceptual site model includes potential releases of volatile organic compounds (VOC), perchlorate, and explosive compounds from spills as well as overflow from perchlorate and explosive storage, drying, transferring, grinding, and processing activities at Buildings 7687, 7688, 7689, 7690, and 7691. Additionally, the drains, sumps, and storage areas associated with these buildings may have provided pathways for VOC, perchlorate, and explosive impacts to soil and groundwater.

3.0 Investigative History

Environmental investigations were conducted at RSA-204 beginning in 1996 with the completion of the Phase I and Phase II environmental baseline surveys (Conestoga Rovers & Associates [CRA], 1996; CH2M Hill, 1998). From 1997 to 2003, IT Corporation (IT) conducted soil and groundwater sampling as part of the Phase I and Phase II remedial investigations for the former OU-10 (Shaw, 2008; IT, 1998; 1999; 2001; 2002); soil and groundwater sampling was conducted within RSA-204 during these investigations. In 2003, Bhate completed confirmation soil sampling at the temporary storage areas RSA-180 and RSA-181 (Bhate Environmental Associates, Inc. [Bhate], 2003). During 2002 and 2003, Shaw conducted an extensive historical background search of each potential source area within the RSA-146 groundwater unit including

Buildings 7687 through 7691; these facilities were determined to warrant further evaluation as RSA-204 (Shaw, 2005). Between 2008 and 2011, groundwater data were collected at RSA-204 in conjunction with the RSA-146 groundwater unit investigation (CB&I, 2015a). An RFI was conducted at RSA-204 from 2011 to 2012 to delineate soil and groundwater contamination (Shaw, 2013a). The 2013 RFI report concluded that site releases of perchlorate in soil have resulted in continued and potential future leaching to groundwater and that perchlorate, TCE, and several explosive compounds in groundwater pose unacceptable risks to current and future receptors. The report concluded that further action was warranted. Accordingly, the Army recommended that corrective measures be implemented for perchlorate-contaminated soil and for perchlorate, TCE, and three explosive compounds (2-nitrotoluene, 2,6-dinitrotoluene, and RDX) in groundwater. In 2014, a design study was conducted at RSA-204, which included further soil and groundwater sampling to support the design of the corrective measures (CB&I, 2014).

4.0 Scope of the Corrective Measures for RSA-204

The overall strategy for cleanup at RSA has been presented to the regulatory agencies in two cleanup strategy documents, the *Final Installation-Wide Groundwater Cleanup Strategy, Redstone Army Garrison, Madison County, Alabama* (Shaw, 2009a) and the *Final Installation-Wide Strategy for Cleanup of Impacted Wetlands* (Shaw, 2010). The scope of the corrective measures for RSA-204 is consistent with this strategy.

The media and contaminant scope covered by the corrective measures at RSA-204 includes soil (perchlorate) and groundwater (perchlorate, TCE, 2-nitrotoluene, 2,6-dinitrotoluene, and RDX) contamination. Exposure to soil causes no unacceptable health threat to industrial or hypothetical future resident receptors or ecological receptors. However, the perchlorate-contaminated soil poses a leaching threat to groundwater. The contaminants in groundwater would pose unacceptable risk to potable users now or in the future. However, potable groundwater use is restricted by the installation-wide groundwater interim record of decision (Shaw, 2007) and the site access control program (Army, 2012).

The Army has elected to perform corrective measures to remove and dispose of perchlorate-contaminated soil to address the leaching threat. However, perchlorate-contaminated soil immediately adjacent to Building 7689 cannot be removed due to concerns with the safety and stability of the active building. An impermeable cover will be emplaced over this area. Groundwater protection will be provided by ensuring that the cover remains in place, is properly maintained, and area noted with signage. The Army will treat and monitor the groundwater in situ to reduce the perchlorate, TCE, and explosives concentrations to acceptable exposure levels.

5.0 Site Characteristics

RSA-204 is located in the western portion of the former Thiokol North Plant area. Topography across the site is relatively flat with the exception of earthen blast berms. Elevations range from 571.5 to 602 feet above mean sea level. No permanent surface water/aquatic habitat features exist at RSA-204. Five buildings (7687, 7688, 7689, 7690, and 7691) are present, along with asphalt driveways leading to them. The remaining portions of the site are wooded and grassy areas. A shallow ephemeral eastward-trending drainage ditch located in the southeastern portion of the site drains the Building 7689 area.

The following summarizes the RSA-204 site characteristics, including the conceptual site model.

- Building 7687 was used for oxidizer (ammonium perchlorate) storage. Building 7688 was used for Class 1.1 nitramine (HMX and RDX) drying. Building 7689 was used for perchlorate grinding; explosive grinding was conducted in Building 7690. Building 7691 was used for perchlorate processing, following which the oxidizer powder was containerized and transported to nearby mixing facilities. The buildings were used for these operations from approximately 1978 to 1996. They are currently used for inert storage or live explosive work.

- The primary sources of contamination were potential spills and overflow from perchlorate and explosive storage, drying, transferring, grinding, and processing activities at Buildings 7687, 7688, 7689, 7690, and 7691 and their associated drains, sumps, and storage areas.

- Releases of site-related contaminants (perchlorate, VOCs including TCE for metal cleaning/degreasing, and explosives) occurred through leaks and spills to the surface and subsurface soil. These releases resulted primarily in downward migration of contaminants, subsequently impacting the underlying groundwater.

- Potential receptors could be exposed to contaminated soil and groundwater at the site. Current human receptors are limited to a commercial/industrial worker, groundskeeper, construction worker, and trespasser. Future potential receptors include all current receptors plus, under a land reuse scenario, hypothetical child and adult residents.

6.0 Investigative Results

Investigations conducted through the RFI and design study optimization sampling at RSA-204 have produced analytical results for 58 surface soil samples, 326 subsurface soil samples, 1 soil vapor sample, and 78 groundwater samples (18 screening-level and 60 definitive-level samples) samples (Figure 2-1 in the CMI work plan). The samples were analyzed for a comprehensive

analyte list including metals, perchlorate, VOCs, semivolatile organic compounds (SVOC), explosive compounds, polychlorinated biphenyls (PCB), and cyanide. The release points at the site have been identified and investigated, and the nature and extent of surface media contamination at RSA-204 has been delineated. A summary of the investigative results from the RFI at RSA-204 (Shaw, 2013a), including an evaluation of contaminant fate and transport, is presented below.

Metals. The results of the comprehensive metals evaluation in surface and subsurface soil during the RFI (Shaw, 2013a) indicate that a majority of metals are naturally occurring. Select results for chromium, copper, and selenium in surface soil were considered to be anomalous, so the results were further evaluated in fate and transport or risk evaluations; all anomalous metals concentrations above preliminary screening values (PSV) in surface soil were bounded by concentrations determined to be naturally occurring. Metals concentrations in the subsurface soil and groundwater samples are naturally occurring.

Perchlorate. Documented perchlorate usage at the site has led to the release of perchlorate to soil and groundwater northeast of Building 7691 (central portion of the site) and east of Building 7689 (southeastern portion of the site). Perchlorate concentrations in excess of the PSV and leachate-based soil screening level (SSL) were only identified in the subsurface vadose zone soils. Perchlorate contamination in vadose zone soil extends to the average depth of groundwater in both areas (17 feet below ground surface in the southeastern area and 15 feet below ground surface in the central area). Surface soil sample concentrations were all less than the PSV or leachate-based SSL. Dissolved perchlorate groundwater plumes with perchlorate concentrations in excess of 10,000 micrograms per liter (µg/L) are present. A maximum concentration of 98,300 µg/L was detected in monitoring well K142-RS1224 in 2014 (Figure 2-6 in the CMI work plan).

Volatile Organic Compounds. VOCs may have been released from this site, but soil data indicated that a source does not remain at the site, as only trace levels of VOCs have been identified in soil at concentrations below their applicable PSVs or SSLs. TCE was detected in a groundwater sample from overburden well 204-RS2683 (located north of Building 7691) at a concentration (11.3 µg/L) above the PSV in 2014 (Figure 2-6 in the CMI work plan).

Semivolatile Organic Compounds. The RFI data indicated SVOC polynuclear aromatic hydrocarbons occurrences were not prevalent throughout site soils, as only one isolated PSV exceedance (dibenz[a,h]anthracene) was present in a historical subsurface soil sample. The location has been bounded on all sides to below the PSV. The PSV exceedance was evaluated in the human health risk assessment but was not identified as a chemical of concern (COC). Data

further suggest that SVOCs, for example, as constituents of petroleum products, were not released during historical industrial operations at the RSA-204 site.

Explosive Compounds. Soil analytical data indicated only localized, relatively low detections of explosive compounds in site soils. Explosives concentrations exceeding the RSA-specific dilution-attenuation factor 4 SSL were present and evaluated further in the fate and transport evaluation. No PSV exceedances of explosive compounds were present in soil. Groundwater PSV exceedances of explosive compounds were generally at concentrations less than 1 µg/L and are scattered across the site. However, 2-nitrotoluene was reported from well K-RS690 at a concentration of 219 µg/L, which exceeds the PSV of 0.27 µg/L. Concentrations of 2,6-dinitrotoluene, RDX, nitrobenzene, and 1,3-dinitrobenzene also exceeded their PSVs in groundwater.

Other Analytes. PCBs and cyanide were analyzed for in select soil samples and were not detected.

Fate and Transport. Potential release mechanisms and migration routes for contaminants were identified and evaluated at RSA-204 in a fate and transport evaluation in the RFI report (Shaw, 2013a). Spills and leaks potentially released chemicals into the soil at the site. The highest perchlorate concentrations in soil were found in the central portion of the site (northeast of Building 7691) and in the southeastern portion of the site (east of Building 7689). The most viable contaminant transport would have been downward through the soil column to groundwater and subsequent groundwater migration.

The fate-and-transport evaluation concluded that no organic compounds (including TCE), explosives, or metals pose ongoing concerns for sourcing to groundwater. Perchlorate, however, remains at elevated concentrations above the leachate-based soil screening level (1.7 mg/kg) at release areas. Perchlorate has leached to groundwater in the past and can be expected to continue to impact groundwater until an action is taken to remove or treat its source.

7.0 Land and Resource Use

Land Use. The land use zone at RSA-204 is classified as industrial. Where practical, the Army has restricted entry into the RCRA SWMUs by fencing them and/or by placing warning signs at key entry points in accordance with the site access control program (Army, 2012). The area surrounding RSA-204 is not currently fenced. However, RSA-204 is within Test Area-10, where entry is restricted to authorized personnel only. Existing site buildings are currently used for inert material storage or live explosives work. Site redevelopment (e.g., construction of parking lots,

buildings, or other structures) is anticipated within the next 5 years. No future residential or day care facilities are planned or anticipated for RSA-204.

Current Groundwater Use. Groundwater under RSA-204 is not currently used for human consumption or for any nonpotable purposes. RSA's installation-wide groundwater interim record of decision (Shaw, 2007) and land-use control (LUC) remedial design (Shaw, 2009b), and the Army's site access control program (Army, 2012) prevent the current use of groundwater for potable purposes and ensure that any nonpotable uses of groundwater are reviewed and evaluated by the Army prior to being permitted.

Future Groundwater Use. Because a final groundwater remedy has not been selected for RSA-204, future use of groundwater under the site is possible. However, under the provisions of the Army's groundwater interim record of decision (Shaw, 2007) and the Army's site access control program (Army, 2012), future groundwater resources beneath RSA-204 and elsewhere on RSA may not be developed for potable purposes, and groundwater withdrawals for nonpotable uses must be managed until corrective measures are selected in the final decision documents for the various groundwater units within RSA, including the RSA-146 groundwater unit for RSA-204. In the meantime, as part of the Permit, ADEM has required that the Army perform annual monitoring of wells located within the RSA perimeter (ADEM, 2016). This annual monitoring will allow the Army and ADEM both to assess the rate of long-term groundwater recovery and ensure protection for residents living outside of the boundary of RSA (CB&I, 2015b).

8.0 Site Risks

An Alabama Risk-Based Corrective Action (ARBCA) human health risk evaluation which includes a vapor intrusion evaluation and a screening-level ecological risk assessment (SLERA) were performed for RSA-204 (Shaw, 2013a). The site risks are summarized below.

8.1 Human Health Risk

The ARBCA guidance considers an individual excess lifetime cancer risk (IELCR) of 1E-5 to be the target cumulative risk. The target noncancer hazard is a hazard index (HI) of 1.0. Estimated cumulative risks/hazards at or below these targets do not require additional action. For soil exposure at RSA-204, neither the cumulative IELCR nor the HI was above ADEM limits for any receptor. No relevant COCs were identified in soil and RSA-204 poses no unacceptable health threat to commercial/industrial or residential receptors from exposure to soils. When exposure to groundwater is included in the estimates, the cumulative IELCR exceeded the ADEM cumulative risk trigger level of 1E-5 for all receptors. Similarly, the cumulative HI exceeded the

threshold level of 1.0 for all receptors. Relevant COCs in groundwater for the hypothetical resident are perchlorate, 2,6-dinitrotoluene, 2-nitrotoluene, RDX, and TCE; exposure to groundwater containing these COCs and developed as a potable source may pose an unacceptable health threat. However, groundwater use at this site is precluded now and in the future because of both RSA's site access control program (Army, 2012) and the installation-wide groundwater interim record of decision (Shaw, 2007).

8.2 Vapor Intrusion

A preliminary screening-level indoor air vapor intrusion evaluation was conducted to identify the potential for health risk from exposure to indoor air vapor originating from VOC contamination in soil or groundwater at RSA-204 in current and future site buildings. The vapor intrusion evaluation concluded that VOC concentrations in soil gas, soil, and groundwater are unlikely to pose an unacceptable health threat to occupants of current or future buildings.

8.3 Ecological Risk

A SLERA was conducted to evaluate the potential for ecological risks posed by site-related chemicals in surface soil at RSA-204. The surface soil data were compared to their respective background screening values (BSV) and ecological screening values (ESV). The initial comparison of the detected constituent concentrations in surface soil to BSVs and ESVs identified 13 metals that exceeded their respective BSVs and/or ESVs and required further evaluation. In addition, perchlorate, 2-nitrotoluene, and HMX were evaluated further because they were detected in surface soil but lacked BSVs and ESVs. A weight-of-evidence evaluation was completed to evaluate further the constituents identified in the initial screening and draw conclusions as to whether site-related constituents have the potential to pose hazards to ecological receptors. The weight-of-evidence evaluation concluded that chromium, copper, and selenium required further evaluation in community-level and food-chain assessments. The community-level and food-chain assessment hazard quotients for copper were all less than 1.0, indicating that further evaluation of copper in RSA-204 surface soil is not warranted. The results for both selenium and chromium indicated that there is the potential for hazards to sensitive individuals with small home ranges in the immediate vicinity of the sample exhibiting the maximum detected concentration; however, risks to terrestrial food chain receptor populations as a whole are unlikely. The mean site concentrations for RSA-204 are below the BSVs, indicating that the potential impacts are lower than those expected for areas with naturally occurring background site concentrations. In the case of selenium, the concentrations exceeding the BSV were from samples collected in 1997. More recent samples have not exhibited selenium and are thought to be representative of site conditions. In addition, there is no known site-related source of selenium at RSA-204. The SLERA concluded that chemicals of potential ecological concern

in surface soil at RSA-204 are unlikely to pose hazards to ecological receptors and further evaluation was not warranted.

9.0 Objectives of the Corrective Measures and Cleanup Goals

The RFI conducted at RSA-204 (Shaw, 2013a) defined the nature and extent of contamination and concluded that the former site operations resulted in the releases of perchlorate, TCE, and explosives (2-nitrotoluene, RDX, and 2,6-dinitrotoluene). Perchlorate contamination remaining in soil does not pose an unacceptable risk to human health but does pose a leaching threat to groundwater. Therefore, the soil cleanup action at RSA-204 is not driven by unacceptable human health exposure risk but by the need to protect groundwater from continued leaching of perchlorate in soil to groundwater. Perchlorate, TCE, and explosives in groundwater pose an unacceptable health threat if groundwater is ever used for potable purposes. Corrective measures are therefore needed to address both soil and groundwater contamination at RSA-204.

The RSA-204 corrective measures objectives are as follows:

- Clean up affected groundwater to concentrations determined to be within acceptable levels for human exposure.
- Reduce perchlorate concentrations in soil at RSA-204 to minimize the potential for perchlorate contamination in site soils to act as a continuing source of groundwater contamination.

The corrective measures objective for soil will be accomplished by removal and disposal of perchlorate in soil and capping a portion of the site adjacent to Building 7689 where perchlorate-contaminated soil cannot be removed due to accessibility and safety concerns with the structure of the active building. The corrective measures objective for groundwater will be accomplished through in situ enhanced bioremediation (ISEB) which produces geochemical conditions that promote the biological conversion of organic contaminants to less-toxic compounds and monitored natural attenuation (MNA).

The Army intends to achieve site closure for soil and groundwater through implementation of corrective measures that are needed to prohibit/minimize leaching of contaminants to groundwater and protect human health. The RSA-specific leachate-based SSL of 1.7 mg/kg was selected as the cleanup goal (CG) for perchlorate in soil as presented in the *Final Installation-Wide Groundwater Cleanup Strategy* (Shaw, 2009a). The PSV of 15 µg/L is the CG for perchlorate in groundwater and 5 µg/L, the established maximum contaminant level, is the

cleanup goal for TCE in groundwater. The CGs developed for the explosives compounds in groundwater are 0.7 µg/L for 2-nitrotoluene; 0.1 µg/L for 2,6-dinitrotoluene; and 0.5 µg/L for RDX. The CGs for the explosives compounds were developed to ensure that cumulative risks from exposure to groundwater do not exceed 1.0E-5.

10.0 Description and Comparison of Alternatives

A technology screening was performed to evaluate a number of corrective measures technologies that are potentially applicable to the perchlorate-contaminated soils and perchlorate-, TCE-, and explosive-contaminated groundwater, including no action (CB&I, 2016). The technologies screened for soil included soil excavation and off-site disposal, on-site ex situ treatment, capping, LUCs, and in situ soil mixing. The technologies screened for groundwater included MNA and ISEB. These technologies were screened against the criteria of performance, reliability, safety, implementability, and cost. The feasible technologies were packaged into the following four corrective measures alternatives:

- Alternative 1 – No Action
- Alternative 2 – Soil Excavation, Localized Cap (Building 7689 Area), Groundwater ISEB via Passive Infiltration, Groundwater MNA, and LUCs
- Alternative 3 – In Situ Soil Mixing, Localized Cap (Building 7689 Area), Groundwater ISEB via Soil Mixing, Groundwater MNA, and LUCs
- Alternative 4 – Groundwater ISEB via Injection, Soil Excavation, Localized Cap (Building 7689 Area), Groundwater MNA, and LUCs.

Alternative 1 is used as a baseline for comparison with other corrective measures technologies. Alternative 2 involves excavating perchlorate-contaminated soil at RSA-204 followed by treating the groundwater through ISEB using passive infiltration of the emulsified vegetable oil (EVO) and nutrient amendments. The excavated soils would be transported to a properly licensed landfill for disposal. Alternative 3 involves treating contaminated soil and groundwater through ISEB using soil mixing of the EVO and amendments. The contaminated soil treatment would consist of using large diameter augers to mix and blend the soil to promote bioremediation of the perchlorate within the soil column and groundwater. Alternative 4 involves direct injection of EVO and nutrient amendments to promote bioremediation of contamination within the groundwater. Excavation of contaminated soil would follow the injection of amendments. Alternatives 2, 3, and 4 involve covering inaccessible perchlorate-contaminated soil adjacent to Building 7689 with an impermeable concrete cap and implementing LUCs for groundwater protection by ensuring that the impermeable cap remains in place, that it is properly maintained,

and signage is in place. Alternatives 2, 3, and 4 include the use of EVO and nutrient additions to stimulate microbial degradation of the perchlorate plume under the site as well as promote reductive dechlorination of the small TCE plume in the northwest corner of the site. Alternatives 2, 3, and 4 also involve groundwater MNA with long-term groundwater monitoring track the progress of the groundwater treatment and attenuation of contaminants.

11.0 Selected Corrective Measure

Alternative 4 was selected as the most appropriate corrective measures alternative to address perchlorate in soil and perchlorate, TCE, and three explosives in groundwater at RSA-204. The corrective measures in Alternative 4 address the soil and groundwater contamination in a manner that is cost-effective and consistent with the Army's intent to reuse the site for industrial purposes. Although Alternative 2, Alternative 3, and Alternative 4 are all evaluated as achieving the site goals within a reasonable time frame and require the maintenance of LUCs for comparable time frames, soil excavation and off-site disposal presented in Alternative 2 and Alternative 4 is a proven soils technology that has been implemented to achieve CMOs at RSA. Alternative 4 (application by injection) is likely to be more effective in treating the groundwater than the ISEB presented in Alternative 2 (application by passive infiltration) due to the thickness of the overburden aquifer requiring treatment where injection will provide more direct contact through the thickness of the contaminated aquifer. Therefore, although Alternative 4 is not the lowest cost option, it is recommended as the preferred corrective measures for RSA-204.

The major components of the selected corrective measures in Alternative 4 include the following:

- Mobilization/demobilization
- Utility clearance and marking
- Vegetation clearing
- Well installation
- Baseline groundwater sampling
- Well closure
- Removal of blast berms
- Surveying and marking the newly installed monitoring well, proposed injection locations, excavation areas, and localized cap (Building 7689)

- ISEB treatment via well points and direct push-technology injections points (Figure 4-1 in the CMI work plan)
- Construction of surface water and erosion controls
- Excavation of contaminated soil to an average depth-to-groundwater of 15 feet in the central area (approximately 10,500 cubic yards) and 17 feet in the southeastern area (approximately 1,560 cubic yards), removal of the sump near Building 7689, and removal of the septic tank (Figure 4-2 in the CMI work plan)
- Confirmation sampling and analysis of the excavated areas
- Waste characterization sampling
- Transport and disposal of excavated soils as special waste (nonhazardous) at a Subtitle D landfill
- Backfilling of excavation areas using clean borrow soil
- Construction of impermeability concrete cap adjacent to Building 7689 (Figure 4-6 in the CMI work plan)
- Site restoration including application of topsoil, revegetation with approved grass mixtures, replacement of asphalt driveways and roads (as necessary), and replacement of berms and monitoring wells
- Monitored natural attenuation and long-term monitoring (groundwater sampling and reporting) (Figure 4-3 in the CMI work plan).

The present value cost for the selected corrective measure is $4,251,200.

12.0 Public Involvement

Public participation requirements specified under Alabama Administrative Code 335-14-8-.08(6) will be met during the permit modification process for the RSA-204 corrective measures. In addition, the Army announced a 30-day public comment period in two local newspapers (*The Huntsville Times* and *Speakin' Out News*) inviting public review of the site documents and requesting public comments on the proposed corrective measures for RSA-204. Government employees at RSA were also sent an email from the RSA Public Affairs Office informing them of the opportunity for public participation for the proposed soil and groundwater corrective measures at RSA-204. No comments were received during the 30-day comment period that began on April 24, 2016 and ended on May 23, 2016.

13.0 Conclusions

This request for permit modification presents the supporting information needed to allow ADEM to modify the Permit, in accordance with Alabama Administrative Code R, 335-14-8-.04(2), with respect to cleanup status at RSA-204.

14.0 References

Alabama Department of Environmental Management (ADEM), 2016, ***Redstone Arsenal's Alabama Hazardous Wastes Management and Minimization Act Hazardous Waste Storage Facility, Thermal Treatment, Solid Waste Management Unit Corrective Action Permit, Modification No. 8***, June 3.

Alabama Department of Environmental Management (ADEM), 2015, ***Redstone Arsenal's Alabama Hazardous Wastes Management and Minimization Act Hazardous Waste Storage Facility, Thermal Treatment, Solid Waste Management Unit Corrective Action Permit, Modification No. 5***, May.

Bhate Environmental Associates, Inc. (Bhate), 2003, ***Draft Confirmatory Sampling Report, Solid Waste Management Units (85, 86, 158, 159, 160, 161, 162, 163, 164, 165, 166, 167, 168, 169, 170, 171, 172, 173, 174, 175, 176, 177, 178, 179, 180, 181, and 182), Redstone Arsenal, Huntsville, Alabama***, April.

CB&I Federal Services LLC (CB&I), 2016, ***Final-Revision 1, Corrective Measures Study, RSA-204, Oxidizer Facility, Building 7691, Operable Unit 10, U.S. Army Garrison-Redstone, Madison County, Alabama***, prepared for Mission & Installation Contracting Command, May.

CB&I Federal Services LLC (CB&I), 2015a, ***Revision 1, RCRA Facility Investigation Report, RSA-146 Groundwater Site, Groundwater Unit GW-02, Operable Unit 19, U.S. Army Garrison-Redstone Arsenal, Madison County, Alabama***, prepared for Mission & Installation Contracting Command, December.

CB&I Federal Services LLC (CB&I), 2015b, ***Annual Monitoring Report: 2014 Installation-Wide Groundwater Monitoring, U.S. Army Garrison-Redstone, Madison County, Alabama***, prepared for Mission & Installation Contracting Command, May.

CB&I Federal Services LLC (CB&I), 2014, ***Corrective Measures Design Study Work Plan RSA-204, Oxidizer Facility, Building 7691, Operable Unit 10, U.S. Army Garrison-Redstone, Madison County, Alabama***, prepared for Mission & Installation Contracting Command, July.

CH2M Hill, 1998, ***Draft-Final Report of Findings, RARE North Plant Phase II EBS***, prepared for U.S. Army Corps of Engineers, Mobile District, Mobile, Alabama, April.

Conestoga-Rovers & Associates (CRA), 1996, ***Environmental Baseline Study Phase I Report, Redstone Arsenal Rocket Engine Assembly Facility (RARE), North Plant, Redstone Arsenal, Madison County, Alabama*** prepared for Thiokol Corporation, November.

IT Corporation (IT), 2002, ***Draft-Final Site Specific Work Plan, Phase II Remedial Investigation, Operable Unit 10, Volume 1 (Text, Tables, Figures 1-1 through 2-24), Volume 2 (Figures 3-1 through 7-78), and Volume 3 (Figures 8-1 through 11-1 and Appendices A-K), Revision 1, Redstone Arsenal, Madison County, Alabama*** prepared for the U.S. Army Corps of Engineers, Mobile District, Mobile, Alabama, April.

IT Corporation (IT), 2001, ***Site-Specific Work Plan, Phase II Remedial Investigation, Operable Unit 10, Redstone Arsenal, Madison County, Alabama***, prepared for the U.S. Army Corps of Engineers, Savannah District, Savannah, Georgia, April.

IT Corporation (IT), 1999, ***Draft Addendum to the Site-Specific Field Sampling Plan, Phase II and Offsite Remedial Investigation, Operable Unit 10, Redstone Arsenal, Madison County, Alabama***, prepared for the U.S. Army Corps of Engineers, Savannah District, Savannah, Georgia, April.

IT Corporation (IT), 1998, ***Site-Specific Field Sampling Plan Attachment, Operable Unit 10, Redstone Arsenal, Madison County, Alabama.***

Shaw Environmental, Inc. (Shaw), 2013a, ***RCRA Facility Investigation Report RSA-204, Oxidizer Facility, Building 7691, Operable Unit 10, U.S. Army Garrison-Redstone, Madison County, Alabama***, November.

Shaw Environmental, Inc. (Shaw), 2010, ***Final Installation-Wide Strategy for Cleanup of Impacted Wetlands,*** prepared for the U.S. Army Environmental Command, Aberdeen Proving Ground, Maryland, May.

Shaw Environmental, Inc. (Shaw), 2009a, ***Final Installation-Wide Groundwater Cleanup Strategy, Redstone Army Garrison, Madison County, Alabama,*** prepared for U.S. Army Environmental Command, December.

Shaw Environmental, Inc. (Shaw), 2009b, ***Final Installation-Wide Groundwater Land-Use Control Remedial Design, Redstone Army Garrison, Madison County, Alabama,*** prepared for U.S. Army Environmental Command, May.

Shaw Environmental, Inc. (Shaw), 2008, ***Final RSA-146 Phase I Remedial Investigation Report, Redstone Arsenal, Madison County, Alabama***, April.

Shaw Environmental, Inc. (Shaw), 2007, ***Final Interim Record of Decision, Interim Remedial Action for Installation-Wide Groundwater, Redstone Arsenal, Madison County, Alabama,*** prepared for the U.S. Army Corps of Engineers, Savannah District, Savannah, Georgia, September.

Shaw Environmental, Inc. (Shaw), 2005, ***Draft RSA-146 Potential Source Area Investigation, Redstone Arsenal, Madison County, Alabama***, January.

U.S. Army Garrison-Redstone (Army), 2012, ***Redstone Army Garrison: Installation Restoration Site Access Control Program***, Redstone Arsenal Regulation 200-7, September.

ATTACHMENT 1

APPROVAL LETTER

LANCE R. LEFLEUR
DIRECTOR

ADEM

ROBERT J. BENTLEY
GOVERNOR

Alabama Department of Environmental Management
adem.alabama.gov

1400 Coliseum Blvd. 36110-2400 ▪ Post Office Box 301463
Montgomery, Alabama 36130-1463
(334) 271-7700 ▪ FAX (334) 271-7950

March 4, 2014

CERTIFIED MAIL # 91 7199 9991 7032 3110 1491

Mr. Terry Hazle, Director
Directorate of Environmental Management
DEPARTMENT OF THE ARMY
Installation Restoration Division
(AMSAM-RA-DEM-IR)
US Army Aviation and Missile Command
Building 4488
Redstone Arsenal, AL 35898

Re: **ADEM Review and Concurrence:**
RCRA Facility Investigation Report, RSA-204, Thiokol Oxidizer Facility, Operable Unit 10, dated November 2013
Redstone Arsenal (RSA) DSMOA Environmental Restoration Program
U.S. EPA I.D. No. AL 7 210 020 742

Dear Mr. Hazle:

The Alabama Department of Environmental Management (ADEM or the Department) has reviewed the *RCRA Facility Investigation (RFI) Report RSA-204*, received on November 21, 2013.

Based on its review, the Department has no comments on this RFI Report for RSA-204 and concurs with the recommendation for corrective measures implementation to be performed for the surface media and groundwater. As stated in this RFI, RSA-204 is isolated from the large commingled groundwater plumes of the former Thiokol North plant, so the groundwater at RSA-204 cannot be deferred to the RSA-146 groundwater unit. Since the findings of this RFI Report indicate action is needed for perchlorate contamination in soil and perchlorate, volatile organic compounds (mainly TCE), and nitroaromatic compounds contamination in groundwater from former site operations, a Corrective Measures Implementation (CMI) plan to address this action is required.

In accordance with Permit Condition VI.E.2., the CMI plan must be completed within 120 calendar days following notification from the Department that a CMI Plan is required. Therefore, RSA should submit a CMI Plan within 120 calendar days of receipt of this letter. ADEM will move RSA-204 to Table VI.6 (Sites requiring a corrective measures implementation

Birmingham Branch
110 Vulcan Road
Birmingham, AL 35209-4702
(205) 942-6168
(205) 941-1603 (FAX)

Decatur Branch
2715 Sandlin Road, S. W.
Decatur, AL 35603-1333
(256) 353-1713
(256) 340-9359 (FAX)

Mobile Branch
2204 Perimeter Road
Mobile, AL 36615-1131
(251) 450-3400
(251) 479-2593 (FAX)

Mobile-Coastal
4171 Commanders Drive
Mobile, AL 36615-1421
(251) 432-6533
(251) 432-6598 (FAX)

work plan) in the facility's Alabama Hazardous Wastes Management and Minimization Act (AHWMMA) permit as part of the next permit modification.

If you have any questions on this matter, please contact Krishna Morrissette of the Facilities Engineering Section via e-mail at kmorrissette@adem.state.al.us or at (334) 394-4335.

Sincerely,

Stephen A. Cobb, Chief
Governmental Hazardous Waste Branch
Land Division

SAC/JW/KMM/

cc: Terry de la Paz, Redstone Arsenal
Brian Roberson, NASA MSFC
Director, RCRA Division, US EPA Region IV
J Jason Wilson, ADEM

cc /via email:
Jason T. Wilson, ADEM
Salee Downey, Redstone Arsenal
Kim Gates, US EPA Region IV
Kelley Hartley, ADEM
Natalie Ellington, US EPA Region IV
Michelle Thornton, US EPA Region IV

APPENDIX C

CORRECTIVE MEASURES IMPLEMENTATION SCHEDULE

RSA-204 CMIP

ID	Task Name	Duration	Start	Finish
1	**Permit Modification Issue**	1 day	Tue 11/1/16	Tue 11/1/16
2				
3	**Procurement**	25 days	Wed 11/2/16	Tue 12/6/16
4				
5	**Site Preparation**	**13 days**	**Wed 12/7/16**	**Fri 12/23/16**
6	Site Clearing	6 days	Wed 12/7/16	Wed 12/14/16
7	Erosion Control	3 days	Thu 12/15/16	Mon 12/19/16
8	Relocate Utilities	4 days	Tue 12/20/16	Fri 12/23/16
9				
10	**ISEB Injection Treatment**	**82 days**	**Mon 12/26/16**	**Tue 4/18/17**
11	Baseline well sampling	5 days	Mon 12/26/16	Fri 12/30/16
12	Install and sample observation piezometers	30 days	Mon 1/2/17	Fri 2/10/17
13	Receive and validate data	20 days	Mon 2/13/17	Fri 3/10/17
14	inject EVO into piezometers	6 days	Mon 3/13/17	Mon 3/20/17
15	Initial EVO injection via DPT	21 days	Tue 3/21/17	Tue 4/18/17
16				
17	**Soil Excavation**	**93 days**	**Wed 4/19/17**	**Fri 8/25/17**
18	Excavation, stockpiling and confirmation sampling	56 days	Wed 4/19/17	Wed 7/5/17
19	Transportation and disposal	10 days	Thu 7/6/17	Wed 7/19/17
20	Backfill and site restoration	27 days	Thu 7/20/17	Fri 8/25/17
21				
22	**Corrective Measures Implementation Report**	63 days	Mon 8/28/17	Wed 11/22/17
23				
24	**Quarterly Monitoring**	**244 days**	**Tue 7/11/17**	**Fri 6/15/18**
25	First Event	5 days	Tue 7/11/17	Mon 7/17/17
26	Second Event	5 days	Tue 10/10/17	Mon 10/16/17
27	Third Event	5 days	Tue 1/9/18	Mon 1/15/18
28	Fourth Event	5 days	Tue 4/10/18	Mon 4/16/18
29				
30	**Annual Monitoring Report**	44 days	Tue 4/17/18	Fri 6/15/18

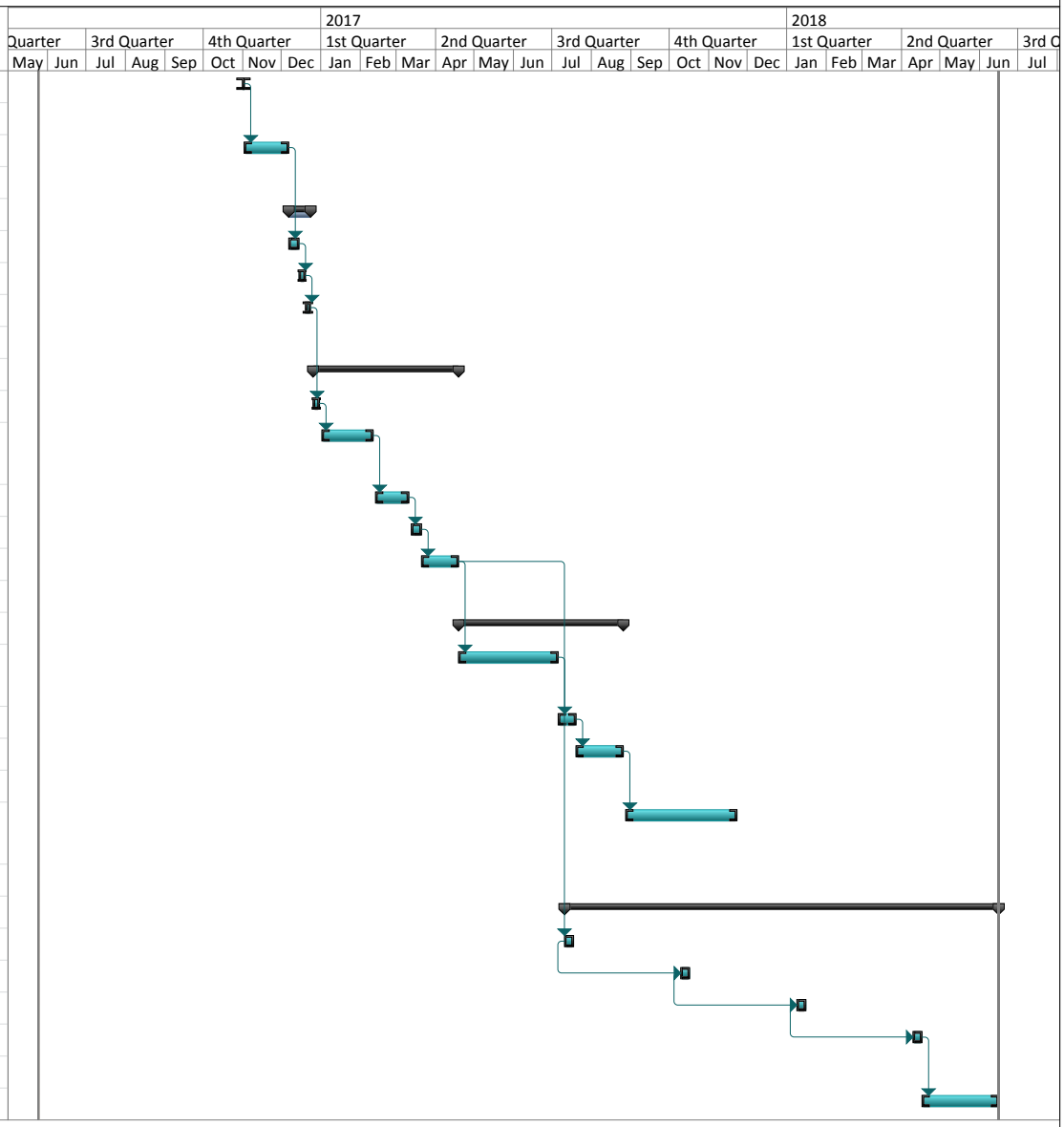

Project: RSA-204 CMIP Schedule
Date: Wed 5/25/16

Task	External Tasks	Manual Task	Finish-only
Split	External Milestone	Duration-only	Deadline
Milestone	Inactive Task	Manual Summary Rollup	Progress
Summary	Inactive Milestone	Manual Summary	
Project Summary	Inactive Summary	Start-only	

APPENDIX D

SITE-SPECIFIC SAFETY AND HEALTH PLAN

Draft

Site-Specific Safety and Health Plan
Corrective Measures Implementation
RSA-204, Oxidizer Facility, Building 7691
Operable Unit 10
U.S. Army Garrison-Redstone
Madison County, Alabama
EPA ID No. AL7 210 020 742

Prepared for:

Mission & Installation Contracting Command
ATTN: MICC Center – FSH
2107 17th Street
Building 4197, Suite 15
Fort Sam Houston, Texas 78234-5015

Prepared by:

CB&I Federal Services LLC
2410 Cherahala Boulevard
Knoxville, Tennessee 37932

Contract No. W91ZLK-09-D-0006
CB&I Project No. 147104
Task Order 0008

September 2016

The following Site-Specific Safety and Health Plan (SSHP) has been designed for the methods presently contemplated by CB&I (CB&I) for execution of the proposed work. Therefore, the SSHP may not be appropriate if the work is not performed by or using the methods presently contemplated by CB&I. In addition, as the work is performed, conditions different from those anticipated may be encountered and the SSHP may have to be modified. Therefore, CB&I only makes representations or warranties as to the adequacy of the SSHP for currently anticipated activities and conditions. This Site-Specific Safety and Health Plan Attachment must be used in conjunction with the Installation-Wide Accident Prevention Plan for Environmental Remediation, Restoration and Program Management Services (August 2013)

Reviews and Approvals

_ _____ 9/22/16
A Date
CB&I Federal Services LLC

___ _____ 9/22/16
Doug Russell, Health and Safety Manager Date
CB&I Federal Services LLC

____ _____ 9/22/16
Brian Rhodes, CB&I Quality Control Date
Site Manager
CB&I Federal Services LLC

Acknowledgements

The approved version of this site-specific safety and health plan (SSHP) for corrective measures implementation of soil and groundwater at RSA-204 has been provided to the Quality Control Site Manager (QCSM). I acknowledge my responsibility to provide the QCSM with the equipment, materials, and qualified personnel to implement fully all safety requirements in this SSHP. I will formally review this plan with the health and safety staff at least annually until project completion.

_____ 9/22/16

Manager Date

I acknowledge receipt of this SSHP from the Project Manager and that it is my responsibility to explain its contents to all site personnel and cause these requirements to be fully implemented. Any change in conditions, scope of work, or other change that might affect worker safety requires me to notify the Project Manager and the Health and Safety Manager.

_____ 9/22/16

Brian Rhodes, CB&I QCSM Date

Safety and Health Plan
Acknowledgement Form

I have been informed of and will abide by the procedures set forth in this site-specific safety and health plan for the RSA-204 corrective measures implementation at Redstone Arsenal. By signing this acknowledgement form, I certify receipt of hazard communication training required for safe performance of my job at Redstone Arsenal, Madison County, Alabama.

Printed Name	Signature	Representing	Date

Redstone Arsenal Gate Hours/Effective 24 February 2014

Location	Weekdays	Weekends
Gate1	0530 - 2100	Closed
Gate 3	0530 – 1300 *	Closed
Gate 7	0530 – 1300*	Closed
Gate 8	0530 – 2100	0530 - 2100
Gate 9	24/7	24/7
Gate 10	0530 – 2100	Closed
Visitor Center 1	0600 - 1430	Closed
Visitor Center 9	0600 - 1700	Closed

*Gate 3 outbound lanes will remain open until 1800
*Gate 7 outbound lanes will remain open until 2100

Gate hours and conditions are subject to change due to homeland defense initiatives; therefore, the point of contact for the most current gate operational hours is the Provost Marshall Office at (256) 876-4195.

Redstone Project Emergency Contacts

Fire Department (ask for RSA Fire Department) 911
Fire Department (from cellular phone) .....(256) 876-2117
Ambulance (HEMSI) 911
Installation Emergency Operations Center (non-911 emergencies) .....(256) 313-1043
Military Police .....(256) 876-2222
Huntsville Hospital (Emergency Room) .....(256) 265-8144
Huntsville Hospital (Trauma Center) .....(256) 265-8137
Chemical Agent Emergencies (state that you are at Redstone) 911
UXO Emergencies (state that you are at Redstone) 911
UXO Nonemergencies/Reporting Only .....(256) 313-3297
Installation Operations Center (IOC) .....(256) 313-1043
Garrison Safety Office .....(256) 876-2944
Thomas Harrell, Safety Manager .....(256) 313-3297
DSN .....(256) 897-3297
Keith Coates, Safety & Occupational Health Specialist .....(256) 876-3383
Bobby Taylor, Safety & Occupational Health Specialist .....(256) 313-3294
Jonathan Niedergeses (MEC support) .....(256) 876-6027
Primary Site Emergency Contact (Barry Hodges, Site Manager, U.S. Army Garrison-Redstone) .....(256) 876-0887
Terry de la Paz, U.S. Army Garrison, Chief, Installation Restoration Branch .....(256) 955-6968
National Response Center .....(800) 424-8802
Poison Control Center .....(800) 222-1222
EPA Region 4 .....(404) 347-3931
Art Holcomb, CB&I Project Manager .....(256) 213-2188
(Cellular) .....(256) 783-8478
Brian Rhodes, CB&I QCSM (RSA Field Office) .....(256) 213-2202
(Mobile/Cellular) .....(256) 714-4200
(Field Office Fax) .....(256) 213-2190
Doug Russell, CB&I H&S Manager .....(865) 692-3584
(Mobile/Cellular) .....(865) 414-9545
James Vigerust, CB&I H&S Field Manager .....(256) 213-2196
(Mobile/Cellular) .....(505) 410-4995
CB&I Hot Line (CB&I incident reporting) .....(866) 299-3445
Dr. William Nassetta, CORE Occupational Physician .....(225) 756-2673
Occupational Health Center, Crestwood Family Practice .....(256) 721-9916
Crestwood Workers Care Madison .....(256) 830-8930

Table of Contents

Page

List of Tables ..... D-ii
List of Figures ..... D-ii
D1.0 Site Work Plan Summary D-1
D2.0 Site Characterization and Analysis D-2
D2.1 Anticipated Hazards D-2
D2.2 General Site Information D-4
D3.0 Personal Protective Equipment D-6
D4.0 Site Monitoring D-7
D5.0 Activity Hazard Analysis D-8
D5.1 Personnel D-8
D5.2 Drilling Operations D-9
D5.3 Heavy Construction Equipment D-9
D5.4 Heat Stress D-11
D5.5 Excavation and Trenching D-11

Attachment 1 – Evaluating MEC/CWM/CA in Support of HTRW Activities
Attachment 2 – Material Safety Data Sheets
Attachment 3 – CMS-710-02-PR-01610, Identifying Underground Installations
Attachment 4 – CB&I Federal Services LLC Incident Reporting and Management Procedure-Federal
Attachment 5 – CMS-710-02-PR-07200, Drill Rig Operations
Attachment 6 – CMS-710-01-PR-00600, Heat Stress Prevention and Control
Attachment 7 – CMS-710-02-PR-01600, Excavation and Trenching
Attachment 8 – CMS-710-02-PR-02100, Lift and Rigging Safety
Attachment 9 – CMS-710-02-PR-01900, Mobile Crane Safety
Attachment 10 – CMS-710-02-PR-01700, Confined Spaces

List of Tables

Table	Title	Follows Tab
2-1	Toxicological and Physical Properties of Chemicals	
4-1	Action Levels	
4-2	Air Monitoring Frequency and Location	
5-1	Activity Hazard Analysis	

List of Figures

Figure	Title	Follows Tab
1	RSA-204 to Huntsville Hospital Route Map	
2	RSA-204 to Crestwood Family Practice Clinic Route Map	
3	RSA-204 to Crestwood Workers Care Madison Clinic Route Map	

D1.0 Site Work Plan Summary

Project Objective. CB&I Federal Services LLC (CB&I), on behalf of the U.S. Army Garrison-Redstone, has prepared this site-specific safety and health plan (SSHP) for Redstone Arsenal (RSA), Madison County, Alabama, under the management of the U.S. Army Environmental Command. The U.S. Army Environmental Command has contracted CB&I under Contract Number W91ZLK-09-D-0006 to perform environmental remediation and restoration and program management services at RSA under the Resource Conservation and Recovery Act Corrective Action Program in accordance with RSA's hazardous waste permit (U.S. Environmental Protection Agency ID #AL7210020742). This SSHP has been developed to provide safety, health and environmental guidance for implementing the corrective measures selected for RSA-204, Oxidizer Facility, Building 7691, Operable Unit 10.

The corrective measures implementation (CMI) work plan describes the corrective measures necessary to support final site closure at RSA-204. The situation warranting action at RSA-204 is ongoing perchlorate-contaminated soil sourcing to groundwater and future potable use of perchlorate-, trichloroethene (TCE)-, and explosives-contaminated groundwater beneath RSA-204 would pose an unacceptable threat to human health.

Upon the completion of corrective measures, land-use controls associated with a localized cap adjacent to Building 7689 will be implemented because perchlorate-contaminated soil that would pose a sourcing threat to groundwater is expected to remain. A long-term groundwater monitoring program will be conducted until cleanup goals are achieved for the groundwater contaminants.

Project Tasks. Project activities to meet the corrective measures objectives in support of soil and groundwater corrective measures are detailed in the RSA-204 CMI work plan. CB&I will perform the following field activities:

- Mobilization/demobilization
- Utility clearance and marking
- Vegetation clearing
- Well installation
- Well closure
- Berm removal

- Construction of surface water and erosion controls
- Baseline groundwater sampling
- Surveying and marking of the new monitoring well, proposed injection locations, excavation areas, and localized cap (Building 7689)
- In situ enhanced bioremediation (ISEB) groundwater treatment including injection reagent mixing, material handling and storage, and hydraulic fracturing and reagent injections via direct-push technology
- Excavation of perchlorate-contaminated soil, sump near Building 7689, and septic tank
- Confirmation sampling and analysis of the excavated areas
- Waste characterization sampling
- Transport and disposal of excavated soils as special waste (nonhazardous) at a Subtitle D landfill
- Backfilling of excavated areas using clean borrow soil
- Cap construction
- Site restoration including application of topsoil, revegetation with approved grass mixtures, replacement of blast berm, and replacement of closed wells
- Monitored natural attenuation and long-term groundwater sampling and reporting.

Personnel Requirements. Up to 10 employees are anticipated for the corrective measures at RSA-204.

All personnel on this site shall have received training, informational programs, and medical surveillance as outlined in the Installation-Wide Accident Prevention Plan for Environmental Remediation, Restoration and Program Management Services and be familiar with the requirements of this SSHP.

Training and medical surveillance documentation will be maintained at the RSA CB&I office.

D2.0 Site Characterization and Analysis

D2.1 Anticipated Hazards

The activity hazard analysis included in Chapter 5.0 lists project-specific practices to be utilized to reduce or eliminate anticipated site hazards. The activity hazard analysis indicates specific

chemical and physical hazards that may be present and encountered during each task. Below each task is a list of hazards and specific actions that will be taken to control the respective hazards. These control measures may include work practice controls, engineering controls, health and safety policy reference, and/or use of appropriate personal protective equipment (PPE).

Perchlorate in soil and perchlorate, TCE, and several explosive compounds in groundwater require corrective measures. Below is a summary of the nature and extent of contamination from the Resource Conservation and Recovery Act facility investigation report.

Perchlorate. Documented perchlorate usage within the site has led to the release of perchlorate to soil and groundwater northeast of Building 7691 (central portion of the site) and east of Building 7689 (southeastern portion of the site). Perchlorate results from surface soil samples collected within the RSA-204 site were all less than the preliminary screening values (PSV) or leachate-based soil screening levels (SSL). Perchlorate concentrations in excess of the PSV and leachate-based SSL were identified in the subsurface vadose zone soils. Perchlorate contamination in soil extends to the average depth of groundwater in both areas (16 feet below ground surface) and is associated with dissolved perchlorate contamination plumes in groundwater with perchlorate concentrations in excess of 10,000 micrograms per liter (µg/L). A maximum detection of perchlorate in groundwater in 2014 was at 204-RS1224 (98,300 µg/L).

Volatile Organic Compounds. Volatile organic compounds (VOCs) may have been released from this site, but soil data indicated that a source does not exist at the site, as only trace levels of VOCs have been identified in soil at concentrations below their applicable PSVs or SSLs. The 2014 groundwater TCE concentration in well 204-RS2683, located north of Building 7691, was 11.3 µg/L, which is above the PSV.

Explosives Compounds. Soil analytical data indicated only localized, relatively low concentrations of explosives compounds within site soils. Explosive compound concentrations exceeding the RSA-specific dilution-attenuation factor 4 SSL were present, but there were no exceedances of the PSV. The explosives in soil were determined to not be a sourcing threat to groundwater. PSV exceedances of explosive compounds in groundwater were generally at relatively low concentrations (less than 1 µg/L) and scattered across the site. However, 2-nitrotoluene was detected in well K-RS690 at a concentration of 219 µg/L, which exceeds the PSV of 0.27 µg/L. Concentrations of 2,6-dinitrotoluene, RDX, nitrobenzene, and 1,3-dinitrobenzene also exceeded their PSVs in groundwater.

Table 2-1 lists toxicological and physical properties of chemicals expected for use during this CMI action.

Munitions and Explosives of Concern /Chemical Warfare Materiel/Chemical Agent. Available information including historical records and recent environmental sampling data was reviewed with respect to munitions and explosives of concern (MEC), chemical warfare materiel (CWM), or chemical agent (CA) potential at RSA-204. The review indicated that the probability of encountering measurable concentrations of CWM/CA or degradation products is unlikely and a low probability of encountering exploded ordnance (UXO). The hazard evaluation process is documented in the MEC/CWM/CA Hazard form provided in Attachment 1. Based on this evaluation, it was determined that CA monitoring will not be required for the corrective measures. On call UXO construction support "stand by" support will be utilized for low probability UXO. In the event any suspicious item is encountered that cannot be positively identified by qualified UXO personnel as not presenting an explosive hazard, all work shall stop and notify the Project Manager and Health and Safety Manager.

D2.2 General Site Information

RSA is located in southern Madison County, Alabama, and bounded by the city of Huntsville to the north and east and the Tennessee River to the south. The towns of Madison and Triana are northwest and southwest of the facility, respectively. RSA encompasses approximately 38,300 acres, and the Department of the Army controls 36,459 acres of that total, of which approximately 15,500 acres are woodlands, 5,360 acres are leased for agricultural use, and approximately 12,000 acres are used for test ranges. The National Aeronautics and Space Administration was granted 1,841 acres in the central part of RSA for the George C. Marshall Space Flight Center. Prior to this land grant in 1960, the area occupied by George C. Marshall Space Flight Center was used by the Army. Approximately 2,900 acres owned by the Tennessee Valley Authority and 4,100 acres of the Wheeler National Wildlife Refuge are within the boundaries of RSA. The southeast portion of RSA where RSA-204 is located was part of the former Redstone Arsenal Rocket Engine North Plant facility, used for rocket motor testing and production.

RSA-204. The buildings located within the RSA-204 site and their former functions are described as follows:

- **Building 7687**, **Oxidizer Service (Storage) Building.** Building 7687 was constructed in 1978 to serve as an oxidizer storage facility. Oxidizers stored in Building 7687 prior to being transported to Buildings 7689, 7690, and 7691 included ammonium perchlorate and sodium chloride. During the 2003 visual site inspection, the concrete floor appeared intact. Features noted at Building 7687 included two loading bay doors on the east and west sides of the building, a drum hoist system, and a shallow drainage ditch running along the south and east sides of the building.

Building 7687 is currently under the command of the Aviation and Missile Research, Development, and Engineering Center and is being used for inert materials storage.

- **Building 7688, Class-1.1 Nitramine Drying Facility.** Building 7688 was constructed in 1978 to serve as a Class 1.1 nitramine drying facility. The general procedure for drying consisted of receiving containers of liquid isopropanol-saturated HMX and RDX. The explosives were removed from the shipping container and air dried for several days. The dried HMX and RDX were then recontainerized and transported to Building 7690 for grinding and processing. HMX, RDX, and isopropyl alcohol are listed as having been used in Building 7688. Building 7688 is currently under the command of the Aviation and Missile Research, Development, and Engineering Center and used for live explosive work, both attended and remote, depending on the program.

- **Building 7689, Ammonium Perchlorate Grinding Facility.** Building 7689 was constructed in 1978 for use as an ammonium perchlorate grinding facility. Ammonium perchlorate is the only chemical listed as having been used in Building 7689. The general procedure for oxidizer grinding began with receiving ammonium perchlorate from the storage facility (Building 7687). Oxidizers were then screened and ground. This process involved passing the oxidizer through a screen and a magnetic separator immediately prior to entering a grinder or pulverizer to assure removal of extraneous material. Dry oxidizers were ground in impact-type mills to a very fine powder. Dehumidifiers were used in the grinding facilities to enable the ground mixture to remain in a fine powder state. The powder was then containerized and transported to nearby mixing facilities. Building 7689 is currently under the command of the Aviation and Missile Research, Development, and Engineering Center and used for live explosive work, both attended and remote, depending on the program.

- **Building 7690**, **Nitramine Grinding Facility.** Building 7690 was constructed in 1978 for use as a nitramine (HMX/RDX) grinding facility. The general procedure for nitramine grinding began with receiving dried HMX and RDX from the nitramine drying facility (Building 7688). The explosives were then screened and ground. This process involved passing the explosives through a screen and a magnetic separator immediately prior to entering a grinder or pulverizer to assure removal of extraneous material. Dry materials were ground in impact-type mills to a very fine powder. Dehumidifiers were used in the grinding facilities to enable the ground mixture to remain in a fine powder state. The powder was then containerized and transported to nearby mixing facilities. HMX and RDX are the only chemicals listed as having been used in Building 7690. Building 7690 is currently under the command of the Aviation and Missile Research, Development, and Engineering Center and used for live explosive work, both attended and remote, depending on the program.

- **Building 7691, Ammonium Perchlorate Processing Facility.** Building 7691 was constructed in 1978 for use as an ammonium perchlorate processing facility. Oxidizers were processed in Building 7691 after being received from the ammonium perchlorate storage facility (Building 7687). Dry oxidizers were ground in impact type mills to a very fine powder. The process involved passing the oxidizer through a

screen and a magnetic separator to remove extraneous material prior to entering the grinder or pulverizer. Dehumidifiers were used in the grinding facilities to enable the ground mixture to remain in a fine powder state. The powder was then containerized and transported to nearby mixing facilities outside of RSA-204. Ammonium perchlorate, petroleum hydrocarbons, and sodium chloride are listed as having been used in Building 7691. Building 7691 is currently under the command of the Aviation and Missile Research, Development, and Engineering Center and is used for live explosive work, both attended and remote, depending on the program.

D3.0 Personal Protective Equipment

The work activities will begin in the following levels of protection.

Task	Initial Level of PPE
Mobilization and Equipment Staging	Level D
Utilities Identification and Locating	Level D
Construction of Erosion controls	Level D
Clearing and Grubbing and Berm Removal	Level D
Well Closure/Installation	Modified Level D
Survey and Marking of Monitoring Wells, Proposed Injection Locations, Excavation Areas, and Cap	Level D
Groundwater Sampling	Modified Level D
ISEB Treatment	Modified Level D
Installing Slide Rail system	Level D
Site Excavation Activities	Modified Level D
Confirmation Soil Sampling	Modified Level D
Backfilling	Level D
Waste Characterization Sampling	Level D
Decontamination	Modified Level D
Replace Blast Berms	Level D
Site Restoration	Level D

Complete descriptions of Level D and Modified Level D protection follow.

Level D. The following equipment will be used for Level D protection:

- Sleeved shirt and long pants
- Leather gloves (when handling sharp objects)
- Nitrile gloves (when handling potentially contaminated materials)
- Steel/composite-toed safety boots
- Safety glasses
- Hard hat
- Hearing protection (when working near/adjacent to operating equipment).

Modified Level D. The following equipment will be used for Modified Level D protection:

- Permeable Tyvek®, Kleenguard, or its equivalent
- Latex boot covers
- Nitrile gloves (outer)
- Lightweight nitrile gloves (inner)
- Steel/composite-toed safety boots
- Safety glasses
- Hard hat
- Hearing protection (when working near/adjacent to operating equipment).

Operators of pressure washing equipment shall wear a face shield, metatarsal guards for the protection of the feet, and leg guards. This will be required in addition to Modified Level D PPE.

D4.0 Site Monitoring

The primary contaminants of concern based on review of historical information and analytical data from previous soil sampling activities is perchlorate. The contaminants of concern from groundwater sampling are perchlorate, TCE, and explosive compounds. Chemical exposure through skin contact and inhalation during corrective measures is unlikely. The site safety and health officer or qualified field leader will perform air monitoring for VOCs, and lower explosive limit using a photoionization detector with minimal 10.6-electron volt lamp during the following activity:

- Drilling, installation, sampling, and closing of wells
- Site setup and installation of best management practices
- ISEB injection/treatment/sampling
- Excavation of contaminated soil, installation of slide rail system, and backfilling of soil.

A calibrated combustible gas/oxygen analyzer with a photoionization detector (i.e., MSA Sirius or equivalent) will be utilized to monitor the work area for potential flammable and/or oxygen-deficient atmospheres and VOCs to determine if airborne material may be present that would necessitate upgrading of protection level. Because anaerobic biodegradation of site-related chemicals of concern has the potential to generate methane, site personnel will monitor for combustible gases when opening monitoring well casings. During excavation activities, the area immediately downwind of the excavation will be monitored for the presence of dust particles to determine if airborne particulate matter is present that would require dust suppression. Action

levels for air monitoring are provided in Table 4-1. Table 4-2 provides the minimum air monitoring frequency and locations.

D5.0 Activity Hazard Analysis

The activity hazard analysis (Table 5-1) is provided for the following corrective measures activities at RSA.

- Mobilization and demobilization
- Site preparation
- Visual site inspections and surveys
- Site surveys (utility)
- Vegetation removal
- Groundwater sampling
- Hand auger operations
- Borehole clearing
- Well closure and installation
- Well installation and development using sonic drilling operations
- Injection of emulsified vegetable oil and amendments
- Substrate handling
- Direct-push technology substrate injection
- Soil sampling
- Rigging and lifting
- Excavator and backhoe operations
- Waste management
- Excavation, backfilling, and slide rail trench protection
- Equipment decontamination
- Pressure washing
- Tank inspection and cleaning
- Vehicle operations.

Material Safety Data Sheets for the reagents that will be used in the groundwater treatment are included in Attachment 2. The activity hazard analyses in Table 5-1 are supplemented with the hazards and controls discussed in Sections D5.1 through D5.5.

D5.1 Personnel

All project personnel shall participate in the daily tailgate safety meetings and be instructed on the following requirements:

- Before excavating, the existence and location of underground pipe, electrical equipment, and gas lines will be determined. This will be done in accordance with CMS-710-02-PR-01610, *Identifying Underground Installations* (Attachment 3), by contacting the appropriate RSA representative to mark the location of the lines. If RSA personnel's knowledge of the area is incomplete, an appropriate device such as

ground-penetrating radar, air knife, geophysics, or equivalent to protect personnel and minimize CB&I liability will be used to locate the service line.

- If excavating equipment is located in the vicinity of overhead power lines, a minimum distance of 15 feet must be maintained between the lines and any point on the equipment. If the lines have appreciable sag, or windy conditions exist, this distance shall be 20 feet.

- Only hand digging shall occur within 3 feet of underground utilities. Once the lines are exposed and confirmed by hand digging or soil vacuum methods, heavy equipment can be used but must remain 3 feet from the exposed utility. A spotter shall be required at all times when working near exposed lines.

All occupational injuries or illness shall be immediately reported and investigated in accordance with CB&I Health and Safety Procedure. Attachment 4 contains the Incident Reporting Management Procedure-Federal, which was developed with HS020. Injuries that require emergency medical evaluation/treatment shall be cared for by Huntsville Hospital ([256] 265-8137). A map and directions to the hospital from the site area is provided on Figure 1. Personnel calling 911 for emergency medical services with a cellular phone must state they are located on Redstone Arsenal in order for the call to be directed to the proper emergency management office.

Injuries that require medical treatment beyond on-site first aid but are not life threatening or severe in nature shall be cared for and evaluated by an occupational physician. The occupational clinic, Crestwood Family Practice ([256] 721-9916), has been selected for CB&I employees working at RSA. A map and directions to the occupational clinic from the site area is provided on Figure 2. A map and directions for an additional occupational clinic, Crestwood Workers Care Madison Clinic, are provided on Figure 3. Subcontractors are encouraged to establish occupational medicine services prior to work on site.

D5.2 Drilling Operations

Applicable sections of CMS Procedure No. CMS-710-02-PR-07200, *Drill Rig Operations* (Attachment 5), will be followed during all drilling operations for the treatment injection points and installation of new monitoring wells.

D5.3 Heavy Construction Equipment

Field activities will be performed using either subcontractor or locally rented equipment. CB&I plans to mobilize the following types of heavy equipment:

- Fork lift
- Direct-push/hollow-stem auger drill rig
- Sonic drill rig

- Excavator
- Backhoe
- Bulldozer
- Dump truck
- Front-end loader
- Compactor.

All equipment operators will be familiar with the requirements for inspection and operation of their assigned equipment. Before equipment is placed into use and on a daily basis, the operator is to inspect and verify that it is in safe operating condition. The following guidelines will be adhered to while operating heavy construction equipment:

- Equipment will not be operated in a manner that will endanger persons or property, nor will the safe operating speeds or loads be exceeded.

- Getting on or off of equipment while it is in motion is prohibited.

- Equipment will be operated in accordance with the manufacturer's instructions and recommendations.

- Determinations of road conditions and structures will be made in advance to verify that clearances and load capacities are safe for the passage of equipment.

- All machinery or equipment will be shut down and positive means taken to prevent its operation while repairs or manual lubrications are being done. Equipment designed to be serviced while running is exempt from this requirement.

- Buckets, blades, dump bodies, and similar equipment will be either fully lowered or blocked when being repaired or when not in use. All controls will be in a neutral position, with the engines stopped and brakes set, unless work being performed on the machine requires otherwise, per manufacturer recommendations.

- No guard, safety appliance, or device will be removed from machinery or equipment or made ineffective except for making immediate repairs, lubrications, or adjustments, and then only after the power has been shut off. All guards and devices will be replaced immediately after completion of repairs and adjustments and before power is turned on.

- Mechanized equipment will be shut down prior to and during fueling operations. Closed systems, with automatic shut-off, which prevent spillage if connections are broken, may be used to fuel diesel-powered equipment left running.

- Personnel will not work, pass under, or ride in the buckets or booms of loaders in operation.

- All self-propelled construction equipment, whether moving alone or in combination, will be equipped with a reverse signal alarm.

- Seat belt use is required while operating equipment.

Spotters for the operator will be the only personnel allowed in the vicinity of the heavy equipment. Spotters will stay out of the boom radius area. Personnel needing to approach heavy equipment while operating will observe the following protocols:

- Wear high-visibility vests meeting American National Standards Institute specifications.
- Make eye contact with the operator (and spotter).
- Signal the operator to cease heavy equipment activity.
- Approach the equipment only after the operator has given signal to do so.

D5.4 Heat Stress

If employees are performing moderate to heavy physical work during construction/remediation operations in standard permeable cotton or synthetic work clothing, monitoring of environmental heat stress parameters is advisable when the ambient air temperature exceeds 90 degrees Fahrenheit and any time discomfort due to heat stress is either noticed or reported. If employees are wearing impermeable protective clothing, physiological monitoring is advisable beginning at 70 degrees Fahrenheit and any time discomfort due to heat stress is either noticed or reported. Heat stress monitoring methods as well as signs, symptoms, treatment, and prevention are presented in CMS Procedure No. CMS-710-01-PR-00600, *Heat Stress Prevention and Control* (Attachment 6).

D5.5 Excavation and Trenching

During excavation and trenching, CMS-710-02-PR-01600, *Excavation and Trenching* (Attachment 7), must be followed. This procedure complies with Occupational Safety and Health Administration Regulations 1926.650 through 1926.652 and EM 385 1-1. No one is permitted to enter any excavation greater than 5 feet deep unless it is made safe for entry and inspected by the competent person. Sloping system requirements shall be in accordance with 29 Code of Federal Regulations 1926 Subpart P, Appendix B. Sloping shall take into account at a minimum the angle of incline required to prevent a cave-in with differences in such factors as the soil type, environmental conditions of exposure, and application of surcharge loads.

All excavation shall be performed from a stable ground position. Daily inspections of the excavation shall be made as needed throughout work shifts and after every rainstorm or other hazard-increasing occurrence by a competent person who has received training and is competent in excavation safety. The competent person shall determine the likelihood of a cave-in, and

reasonable actions such as sloping or shoring shall be taken if the walls appear to be unstable. Slide rail systems shall be installed per the lower tier subcontractor's approved health and safety plan and in accordance with CBI Procedures CMS-710-02-PR-02100, *Rigging Plan and Rigging Safety* (Attachment 8), and CMS-710-02-PR-01900, *Mobile Crane Safety* (Attachment 9). Excavations classified as confined space shall follow CMS-710-02-01700, *Confined Spaces* (Attachment 10). When it is necessary for personnel to be near the excavation for photodocumentation, an excavation-competent person must deem it safe to do so. Otherwise, all photographs of the excavation shall be performed by the excavator operator from within the cab when it is safe to do so.

All spoil shall be located at least 3 feet from the edge of the excavation to prevent loading on the excavation platform. The excavation shall be guarded on all sides by barricades or caution tape at least 10 feet from the edge. Class II protection around excavations within the delineated exclusion zone shall be utilized.

TABLES

Table 2-1

Toxicological and Physical Properties of Chemicals
RSA-204
Redstone Arsenal, Madison County, Alabama

Substance [CAS]	IP[a] (eV)	Odor Threshold (ppm)	Route[b]	Symptoms of Exposure	Treatment	TWA[c]	STEL[d]	Source[e]	IDLH (NIOSH)[f]
Cyclotrimethylenetrinitramine RDX [121-82-4]	?	?	Inh Abs Ing Con	Anoxia, cyanosis; anemia, jaundice; reproductive effects; [potential occupational carcinogen].	Eye: Irrigate immediately Skin: Soap wash promptly Breath: Respiratory support Swallow: Immediate medical attention	1.5 mg/m^3 (skin)	3 mg/m^3	PEL TLV REL	NE
Dinitrotoluene [25321-14-6]	?	?	Inh Abs Ing Con	Anoxia, cyanosis; anemia, jaundice; reproductive effects; [potential occupational carcinogen].	Eye: Irrigate immediately Skin: Soap wash promptly Breath: Respiratory support Swallow: Immediate medical attention	1.5 mg/m^3 (skin) 1.5 mg/m^3 (skin)		PEL TLV REL	Ca 50 mg/m^3
Fuel oil (diesel oil, medium)	None	None	Ing Inh Con	Ingestion causes nausea, vomiting, and cramps; depressed central nervous system, headache, coma, death; pulmonary irritation; kidney and liver damage; aspiration causes severe lung irritation, coughing, gagging, dyspnea, sub-sternal stress, pulmonary edema; broncho-pneumonia; excited, then depressed, central nervous system.	Eye: Irrigate promptly Skin: Soap wash Breath: Respiratory support Swallow: Immediate medical attention Aspiration: Immediate medical attention			PEL TLV REL	
Gasoline [8006-61-9]	None	0.3	Inh Ing Con	Intoxication, headaches, blurred vision, dizziness, nausea; eye, nose throat irritation; potential kidney and other cancers. Car-cinogenic.	Eye: Irrigate immediately (15 min) Skin: Soap wash promptly Breath: Respiratory support Swallow: Immediate medical attention	300 ppm Ca, lowest feasible conc. (LOQ 15 ppm)	500 ppm	PEL TLV REL	1400 ppm 10% LEL
Hydrogen chloride (hydrochloric acid) [74-90-8]	12.74	0.255–10.6	Inh Ing Con	Inflamed nose, throat, larynx; cough, burns throat, choking; burns eyes, skin; dermatitis; in animals; laryngeal spasm; pulmonary edema.	Eye: Irrigate immediately Skin: Water flush immediately Breath: Respiratory support Swallow: Immediate medical attention		C5 ppm C5 ppm C5 ppm	PEL TLV REL	100 ppm

Table 2-1

Toxicological and Physical Properties of Chemicals
RSA-204
Redstone Arsenal, Madison County, Alabama

Substance [CAS]	IP[a] (eV)	Odor Threshold (ppm)	Route[b]	Symptoms of Exposure	Treatment	TWA[c]	STEL[d]	Source[e]	IDLH (NIOSH)[f]
Isopropyl alcohol (isopropanol) [67-63-0]	10.16	43–200	Inh Ing Con	Mild irritation of the eyes, nose, and throat; drowsiness, dizziness, headache; dry, cracked skin.	Eye: Irrigate immediately Skin: Water flush Breath: Respiratory support Swallow: Immediate medical attention	400 ppm 400 ppm 400 ppm	500 ppm 500 ppm 500 ppm	PEL TLV REL	2,000 ppm
Methanol	10.85	4.2-5960	Inh Abs Ing Con	Irritated eyes, headache, drowsiness, lightheadedness, nausea, vomiting, disturbance in vision, blindness.	Eye: Irrigate immediately Skin: Water flush promptly Breath: Fresh air Swallow: Immediate medical attention		200 ppm (skin) 200 ppm (skin) 200 ppm	PEL TLV REL	6000 ppm
Nitric acid [7697-37-2]	11.95	0.3–1	Inh Ing Con	Irritated eyes, mucous membranes, and skin; delayed pulmonary edema, pneumonitis, bronchitis; dental erosion.	Eye: Irrigate immediately Skin: Water flush promptly Breath: Respiratory support Swallow: Immediate medical attention	2 ppm 2 ppm 2 ppm	4 ppm 4 ppm 4 ppm	PEL TLV REL	100 ppm
2-Nitrotoluene [88-72-2]	9.43	?	Inh Abs Ing Con	Anoxia, cyanosis; headache, lassitude (weakness, exhaustion), dizziness; ataxia; dyspnea (breathing difficulty); tachycardia; nausea, vomiting.	Eye: Irrigate immediately Skin: Soap wash promptly Breath: Respiratory support Swallow: Immediate medical attention	2 ppm (skin) 2 ppm (skin) 2 ppm (skin)		PEL TLV REL	200 ppm
Ammonium perchlorate {7990-98-9]			Inh Abs Ing	Ingestion causes cramps;, headache, coma, death; pulmonary irritation; kidney and liver damage; aspiration causes severe lung irritation, and coughing.	Eye: Irrigate immediately Skin: Water flush promptly Breath: Respiratory support Swallow: Immediate medical attention				

Table 2-1

Toxicological and Physical Properties of Chemicals
RSA-204
Redstone Arsenal, Madison County, Alabama

Substance [CAS]	IP[a] (eV)	Odor Threshold (ppm)	Route[b]	Symptoms of Exposure	Treatment	TWA[c]	STEL[d]	Source[e]	IDLH (NIOSH)[f]
Sodium perchlorate *[7601-89-0]*			Inh Ing	Acute Potential Health Effects: Skin: May cause skin irritation. Eyes: Causes eye irritation. Inhalation: May be harmful if inhaled. May cause respiratory tract irritation. May also affect the kidneys if inhaled. Ingestion: May be harmful if swallowed. May cause irritation of the digestive tract with nausea and vomiting. May also affect behavior, respiration (dyspnea), metabolism, blood, and liver. Chronic Potential Health Effects: May cause liver and kidney damage.	Eye: Irrigate immediately Skin: Soap wash flush Breath: Respiratory support Swallow: Immediate medical attention				
Trichloroethylene (TCE, trichloroethene) [79-01-6]	9.45	1.36	Inh Ing Con	Headache, vertigo; visual disturbance, tremors, somnolence, nausea, vomiting; irritated eyes; dermatitis; cardiac arrhythmia paresthesia. Carcinogenic.	Eye: Irrigate Immediately Skin: Soap wash promptly Breath: Respiratory support Swallow: Immediate medical attention	100 ppm 10 ppm 25 ppm* *(10 hr TWA)	C200 ppm;300ppm* 100 ppm Ca *5 Min peak in any 2 hrs	PEL TLV REL	Ca [1,000 ppm]
Portland cement			Inh	Fine gray powder that can be irritating if inhaled or in eyes.	Eye: Irrigate immediately Skin: Soap wash flush Breath: Respiratory support Swallow: Immediate medical attention	10 mg/m^3 15 mg/m^3 total dust 5 mg/m^3 respirable fraction 10 mg/m^3/total dust 5 mg/m^3 respirable fraction		TLV PEL REL	

Table 2-1

Toxicological and Physical Properties of Chemicals
RSA-204
Redstone Arsenal, Madison County, Alabama

Chemical substances italicized represent material that will be used onsite and is not representative of site contaminants.

[a]IP - Ionization potential (electron volts).
[b]Route - Inh, Inhalation; Abs, Skin absorption; Ing, Ingestion; Con, Skin and/or eye contact.
[c]TWA - Time-weighted average. The TWA concentration for a normal work day (usually 8 or 10 hours) and a 40-hour work week, to which nearly all workers may be repeatedly exposed, day after day without adverse effect.
[d]STEL - Short-term exposure limit. A 15-minute TWA exposure that should not be exceeded at any time during a workday, even if the TWA is not exceeded.
[e]PEL - Occupational Safety and Health Administration (OSHA) permissible exposure limit (29 CFR 1910.1000, Table Z).
AEL - Airborne Exposure Limit.
TLV - American Conference of Governmental Industrial Hygiene (ACGIH) threshold limit value—TWA.
REL - National Institute for Occupational Safety and Health (NIOSH) recommended exposure limit.
[f]IDLH (NIOSH)—Immediately dangerous to life or health (NIOSH). Represents the maximum concentration from which, in the event of respirator failure, one could escape within 30 minutes without a respirator and without experiencing any escape-impairing or irreversible health effects.
NE - No evidence could be found for the existence of an IDLH (NIOSH Pocket Guide to Chemical Hazards, Pub. No. 90-117, 2012).
C - Ceiling limit value which should not be exceeded at any time.
Ca - Carcinogen.
NA - Not applicable.
? - Unknown.
LEL - Lower explosive limits.
LC_{50} - Lethal concentration for 50 percent of population tested.
LD_{50} - Lethal dose for 50 percent of population tested.
NIC - Notice of intended change (ACGIH).

References:

American Conference of Governmental Industrial Hygienists Guide to Occupational Exposure Values, 2015, compiled by the American Conference of Governmental Industrial Hygienists.
Amoore, J. E. Hautula, "Odor as an Aid to Chemical Safety," Journal of Applied Toxicology, 1983.
Clayton, George D., Clayton, F. E., Patty's Industrial Hygiene and Toxicology, 3rd ed., John Wiley & Sons, New York.
Documentation of TLVs and BEIs, American Conference of Governmental Industrial Hygienists, 2014.
Fazzuluri, F. A., Compilation of Odor and Taste Threshold Values Data, American Society for Testing and Materials, 1978.
Gemet, L. J. Van, Compilation of Odor Threshold Values in Air and Water, CIVO, Netherlands, 1977.
Gemet, L. J. Van, Compilation of Odor Threshold Values in Air and Water, Supplement IV, CIVO, Netherlands, 1977.
Lewis, Richard J., Sr., 1992, Sax's Dangerous Properties of Industrial Materials, 8th ed., Van Nostrand Reinhold, New York.
Micromedex Tomes Plus (R) System, 1992, Micromedex, Inc.
National Institute for Occupational Safety and Health Pocket Guide to Chemicals, Pub. 1990, No. 90-117, National Institute for Occupational Safety and Health.
Odor Threshold for Chemicals with Established Occupational Health Standards, American Industrial Hygiene Association, 1989.
Respirator Selection Guide, 3M Occupational Health and Safety Division, 2014.
Verschuseren, K., Handbook of Environmental Data on Organic Chemicals, Van Nostrand and Reinhold, 1977.
Warning Properties of Industrial Chemicals—Occupational Health Resource Center, Oregon Lung Association.
Workplace Environmental Exposure Levels, American Industrial Hygiene Association, 1992.

Table 4-1

Action Levels
RSA-204
Redstone Arsenal, Madison County, Alabama

(Page 1 of 2)

When in Level C PPE

Analyte	Action Level[a]	Required Action
VOCs	≥ 200 ppm above background in BZ	Stop work, evacuate work area; contact HSM.
Oxygen	≥ 20%, <23%	Normal operations
	< 20%, >23%	Stop work, evacuate work area; contact HSM [b].
Flammable vapors	≥ 10% LEL	Stop work, evacuate work area; contact HSM [b].
	< 10% LEL	Continue operations, monitor for VOCs.
Hydrogen sulfide	> 2.5 ppm in BZ	Stop work; evacuate work area; contact HSM. Upgrade to Level B PPE may be necessary if engineering controls are not effective to maintain concentrations below action level.
Total dust	≥ 5 mg/m^3	Water suppression dust control.

When in Level D Modified/D PPE

Analyte	Action Level[a]	Required Action[b]
VOCs	≥ 20 ppm above background in BZ	Stop activities, suspend work activities for 15 to 30 minutes; if readings are sustained, contact HSM [b].
Oxygen	≥ 20%, <23%	Normal operations
	< 20%, >23%	Stop work, evacuate work area; contact HSM.
Flammable vapors	≥ 10% LEL	Stop work, evacuate work area; contact HSM [b].
	< 10% LEL	Continue operations, monitor for VOCs.
Hydrogen sulfide	> 2.5 ppm in BZ	Stop work; evacuate work area; contact HSM. Upgrade to Level B PPE may be necessary if engineering controls are not effective to maintain concentrations below action level.
Total dust	≥ 2.5 mg/m^3	Water suppression dust control.

Table 4-1

Action Levels
RSA-204
Redstone Arsenal, Madison County, Alabama

When in Support Zone

Analyte	Action Level[a]	Required Action
VOCs	≥ 1 ppm above background in BZ	Evacuate support zone and re-establish perimeter of exclusion zone.

[a] Four instantaneous peaks in any 15-minute period or a sustained reading for 5 minutes in excess of the action level will trigger a response.

[b] Contact with the HSM must be made prior to continuance of work. The HSM may then initiate perimeter/integrated air sampling along with additional engineering controls.

< - Less than.
≥ - Greater than or equal to.
> - Greater than.
BZ - Breathing zone.
HSM - Health and safety manager.
LEL - Lower explosive limit.
mg/m^3 - Milligrams per cubic meter.
PPE - Personal protective equipment.
ppm - Parts per million.
VOC - Volatile organic compound.

No one is permitted to downgrade levels of PPE without authorization from the HSM.

Table 4-2

Air Monitoring Frequency and Location
RSA-204
Redstone Arsenal, Madison County, Alabama

Work Activity	Instrument	Frequency	Location
Excavation	OV Monitor CGI/O_2/H_2S Data Ram	Continuously Continuously Continuously	BZ of employees in excavation area
Monitoring well installation & closure	OV Monitor CGI/O_2	Continuously Continuously	BZ of employees and near borehole
Installing slide rails	CGI/O_2/H_2S	Continuously	BZ of employees
Groundwater sampling	OV Monitor CGI/O_2	Continuously	BZ of employees and at wellhead
ISEB treatment	CGI/O_2/H_2S OV Monitor	Continuously	BZ of employees
Confirmation soil sampling	CGI/O_2/H_2S OV Monitor	Continuously	BZ of employees

BZ - Breathing zone.
CGI - Combustible gas indicator.
H_2S - Hydrogen sulfide.
NR - Not required.
OV - Organic vapor (photoionization detector 10.6-electron volt lamp).
O_2 - Oxygen.

Table 5-1 Activity Hazard Analysis

Activity/Work Task: Mobilization (and Demobilization)	Overall Risk Assessment Code (RAC) (Use highest code)	**M**
Project Location: RSA-204 Redstone AL	**Risk Assessment Code (RAC) Matrix**	
Contract Number: W91ZLK-09-D-0006		
Date Prepared: 3/31/2015		
Prepared by (Name/Title): James Vigerust Health and Safety		
Reviewed by (Name/Title): Doug Russell/HSM		
Notes: (Field Notes, Review Comments, etc.) Added		

Severity	**Probability**				
	Frequent	Likely	Occasional	Seldom	Unlikely
Catastrophic	E	E	H	H	M
Critical	E	H	H	M	L
Marginal	H	M	M	L	L
Negligible	M	L	L	L	L

Step 1: Review each **"Hazard"** with identified safety **"Controls"** and determine RAC (See above)

"Probability" is the likelihood to cause an incident, near miss, or accident and identified as: Frequent, Likely, Occasional, Seldom, or Unlikely.

"Severity" is the outcome/degree if an incident, near miss, or accident did occur and identified as: Catastrophic, Critical, Marginal, or Negligible

Step 2: Identify the RAC (Probability/Severity) as E, H, M, or L for each "Hazard" on AHA. Annotate the overall highest RAC at the top of AHA.

RAC Chart

- **E = Extremely High Risk**
- **H = High Risk**
- **M = Moderate Risk**
- **L = Low Risk**

Job Steps	Hazards	Controls	EM 385-1-1	RAC
Travel at project site.	Vehicle operation.	• See AHA Vehicle Operation	18.A	**M**
Arrival of new personnel at site.	Untrained personnel.	• All personnel working on hazardous, toxic, and radioactive waste (HTRW) shall submit HAZWOPER training certificates [40-hour, 8-hour (if applicable), and supervisor (if applicable] to a Site Safety and Health Officer (SSHO). All personnel shall attend a site safety orientation. Other training certifications shall also be made available on site.	01.B 28.A	**M**
	Medical qualifications.	• All personnel working on HTRW shall submit current physician's certificate stating that employee is participating in an appropriate medical surveillance program meeting 29 Code of Federal Regulation (CFR) §1910.120	01.C	**L**
	Allergies.	• All personnel should complete the Known Allergies Questionnaire (voluntary only).	01.C.01	**L**

Job Steps	Hazards	Controls	EM 385-1-1	RAC
Arrival of new personnel at site (continued).	Unfamiliarity with: site, general (chemical, physical, environmental) site hazards, project safety rules and hazard control procedures, chain of command, and emergency procedures.	• All personnel shall attend the site orientation training. The site orientation shall include a review of the evacuation routes, emergency procedures, HAZCOM, PPE and general work rules. After personnel are trained in the contents of the Accident Prevention Plan (APP), APP Addenda, they shall sign the APP Acknowledgment Form. Personnel who may participate in intrusive activities shall attend Munitions and Explosives of Concern Awareness Training. All pertinent AHAs shall be reviewed with personnel (as applicable). Post all hazard warning signs, emergency maps, and emergency phone numbers.	01.B.03 01.E.01 28 03.A.01.b	**M**
Unload equipment/prepare site.	Failure to properly plan daily activities.	• A Job Safety Analysis (JSA), as required by, "Job Safety Analysis (JSA)," shall be prepared by the crew prior to commencing daily activities. The JSA may be used as a component of the morning Tailgate Safety Meeting. The JSA shall be revised at any time throughout the workday when new tasks are initiated, unforeseen circumstances arise, or if working conditions change. Personnel shall implement Hazard Assessment Resolution Program.		**M**
	Heavy lifting, strains, and sprains.	• No individual employee is permitted to lift any object that weighs over 50 pounds. Proper lifting techniques shall be used. Multiple employees or use of mechanical lifting devices are required for lifting objects over the 50-pound limit.	14.A.01	**M**
	Use of mechanical equipment.	• Only qualified personnel shall be permitted to operate equipment. Mechanical equipment shall be inspected daily. Deficiencies in equipment shall be noted on the inspection form. Equipment found to be unsafe shall not be used. • All equipment shall be operated at safe speeds and in a safe manner. Equipment operators shall wear safety belts and hearing protection. • Ground personnel shall not position themselves between equipment and stationary objects. Personnel are only permitted to approach equipment after a signal from the operator	18.G	**M**
Prepare site.	Hand injuries.	• Items to be handled shall be inspected for sharp edges prior to being handled. Personnel shall wear leather gloves when handling sharp materials. Personnel shall be aware of and avoid pinch point hazards.	05.A.08	**L**
	Fire.	• Fire extinguishers shall be placed in work areas. The SSHO shall establish smoking areas. Engines shall be shut off before refueling. A 40-B:C fire extinguisher shall be available at refueling areas. Smoking shall not be permitted near fueling areas. Use caution with vehicle exhaust systems in grassy areas. Mobile construction equipment shall be equipped with fire extinguishers.	09.E.01 09.A.06	**L**

Job Steps	Hazards	Controls	EM 385-1-1	RAC
Prepare site (continued).	Chemical hazards.	• The Exclusion Zones and Contamination Reduction Zones shall be set-up and appropriately marked with signage. The Emergency Eyewash station shall be inspected, cleaned, filled, and then placed in service. Notify all personnel of the emergency eyewash station location.	28 06.B.02.b 06.B.01.b	**L**
Setting up field support trailers	Personnel or property struck by moving equipment.	• Clearance of overhead utilities shall be verified before backing. Spotters shall be used to back trailers. Trailer tires shall be chocked.	08.B.04 11.E	**M**
	Emergency egress.	• Trailers shall be positioned in a fashion to allow for safe and efficient egress during an emergency evacuation.	01.E	**M**
	Electrocution.	• Only qualified electricians shall make electrical connections. All electrical work shall comply with National Electric Code standards. All circuit breakers shall be labeled. Personnel shall be instructed in main disconnect location.	11.A.01.a, b, c	**L**
	Slips, trips, and falls.	• Landings, stairs, and handrails shall be constructed for each doorway leading to the outside of a trailer which meet the requirements specified in 29 CFR 1910 Subpart D. Housekeeping shall be maintained.	14.C.01-10	**M**
	Fire.	• Each trailer shall be immediately equipped with at least one 2-A: 10-B:C fire extinguisher.	09.E.01	**L**
	Sanitation.	• Washing, toilet, and trash disposal facilities (dumpster) shall be installed prior to occupying trailers.	04.A.02.c 04.A.03	**L**
	High wind.	• All trailers shall be appropriately anchored.	02.A.01	**M**

Equipment to be Used	Training Requirements/Competent or Qualified Personnel Name(s)	Inspection Requirements
Personal Protective Equipment - Level D: Hard hat Safety glasses Safety-toed boots Work gloves ANSI Class 2 reflective warning vests Equipment: Fire extinguishers Emergency eyewash First aid kit Deep-Woods Off or Ultrathon Repel Permanone Drinking water Weather radio or AM/FM radio	Competent Person (CP) / Qualified Person (QP): James Vigerust – CP/SSHO James Vigerust – QP/First Aid and CPR Training Requirements: Site safety orientation Applicable AHAs HAZWOPER 40-Hour Qualified equipment operators Lifting/back safety Fire extinguisher use Emergency procedures Biological hazard identification and control National Lightning Safety Institute Lightning Safety procedures	Daily site safety inspection (SSHO) – James Vigerust Daily site inspection (QCO) – Mechanized equipment (daily) Overhead and underground utilities Housekeeping (daily) Fire extinguisher (weekly) Vehicle inspection daily Equipment and tools inspection daily and before use Survey areas for poisonous plants, insects, and animals Check body for ticks

Table 5-1 Activity Hazard Analysis

Activity/Work Task: Site Preparation	Overall Risk Assessment Code (RAC)					**M**
Project Location: RSA-204 Redstone AL	**Risk Assessment Code (RAC) Matrix**					
Contract Number: W91ZLK-09-D-0006	**Severity**	**Probability**				
Date Prepared: July 2015		Frequent	Likely	Occasional	Seldom	Unlikely
Prepared by: James Vigerust/SSHO	Catastrophic	E	E	H	H	M
	Critical	E	H	H	M	L
Reviewed by: Doug Russell/HSM	Marginal	H	M	M	L	L
	Negligible	M	L	L	L	L

Notes: (Field Notes, Review Comments, etc.) Includes staging equipment, materials, and supplies in work areas, placement of temporary office and storage facilities, and installation of temporary fencing.	Step 1: Review each **"Hazard"** with identified safety **"Controls"** and determine RAC (See above)	
	"Probability" is the likelihood to cause an incident, near miss, or accident and identified as: Frequent, Likely, Occasional, Seldom or Unlikely.	**RAC Chart**
	"Severity" is the outcome/degree if an incident, near miss, or accident did occur and identified as: Catastrophic, Critical, Marginal, or Negligible	**E = Extremely High Risk** **H = High Risk**
	Step 2: Identify the RAC (Probability/Severity) as E, H, M, or L for each "Hazard" on AHA. Annotate the overall highest RAC at the top of AHA.	**M = Moderate Risk** **L = Low Risk**

Job Steps	Hazards	Controls	RAC
Mobilizing Equipment	Striking workers, equipment	• Use spotters when backing • Know the safest route to and from your work area • Use flags, traffic cones to control traffic • Wear reflective warning vests when exposed to vehicular traffic • Isolate equipment swing areas • Make eye contact with operators before approaching equipment • Understand and review posted hand signals	**M**

3—AHA—Site Preparation

Job Steps	Hazards	Controls	RAC
Mobilizing Equipment (continued)	Contact with overhead utilities	• Inspect area for overhead hazards • Maintain required overhead clearances from power lines. Nominal System Voltage — Minimum Required Clearance up to - 50 kV — 10 feet (3m) 51 - 200 kV — 15feet (4.6m) 201 - 350 kV — 20feet (6m) 351 - 500 kV — 25 feet (7.6m) 501 - 650 kV — 30 feet (9.1m) 651 - 800kV — 35 feet (10.7m) 801 - 950 kV — 40 feet (12.2m) 951 - 1100 kV — 45 feet (13.7m	M
Lifting Equipment and Materials	Muscle strains	• Observe 50 lb individual lifting limit • Don't lift and twist • Get help for awkward loads and for loads greater than 60 lbs • Train workers in safe lifting techniques	M
Walking on Site	Slip, trip, and falls	• Inspect work areas for washes, potholes, or other surface irregularities that could cause slips, trips or falls • Beware that uneven ground animal burrows could be obscured by vegetation earth and/or concrete rubble • Always establish good footing • Maintain good housekeeping. Keep walkways clear of construction debris, and tools • Wear lug-soled safety boots	L
	Biological hazards (including insects and spiders)	• Inspect areas for, and avoid insects, spiders, snakes and poisonous plants • Avoid placing hands or feet into concealed areas • Use additional protective equipment such as coveralls and gloves if needed	L

3—AHA—Site Preparation

Job Steps	Hazards	Controls	RAC
Installing Fencing	Power tools and hand tools	• Identify and understand parts of equipment which may cause crushing, pinching, rotating or similar motions. • Assure guards are in place to protect from these parts of equipment during operations. • Provide and use proper work gloves when the possibility of pinching, or other injury. • Maintain all equipment in a safe condition. • Keep all guards in place during use. • De-energize machinery before maintenance or service. • Use the right tool for the job.	**M**
All Activities on Site	High ambient temperature	• Protect skin from ultraviolet rays by wearing your hard hat, long pants, long sleeved shirts, and sunscreen lotion • Wear clothing/PPE suitable for weather and working conditions • Keep an eye on your working buddy for signs of heat or cold stress. • Drink fluids and rest when needed	**L**
Changed or Unanticipated Conditions	Safety or health hazards that may be derived from changed or unanticipated conditions	• Modify the AHA as often as necessary to address new or unanticipated hazards. Use “Job Safety Analysis” form to facilitate field documentation	**NA**

Equipment to be Used	Training Requirements/Competent or Qualified Personnel name(s)	Inspection Requirements
• Level D PPE: hard hat, safety boots, long-sleeved shirts and pants, abrasion resistant gloves, safety glasses,	• Tailgate safety meeting • Site-specific orientation • Hazards of task specific tools and equipment • James Vigerust – CP/SSHO	• Inspect equipment daily prior to use • Inspect non-construction equipment and power tools per manufacturer requirements.

Table 5-1 Activity Hazard Analysis

Activity/Work Task: Visual Site Inspections and Surveys	Overall Risk Assessment Code (RAC) (Use highest code)	**M**
Project Location: RSA-204 Redstone AL	**Risk Assessment Code (RAC) Matrix**	
Contract Number: W91ZLK-09-D-0006		
Date Prepared: 03/30/2015		
Prepared by (Name/Title): James Vigerust Health and Safety		
Reviewed by (Name/Title): Doug Russell/HSM		
Notes: (Field Notes, Review Comments, etc.)		

Severity	**Probability**				
	Frequent	Likely	Occasional	Seldom	Unlikely
Catastrophic	**E**	**E**	**H**	**H**	**M**
Critical	**E**	**H**	**H**	**M**	**L**
Marginal	**H**	**M**	**M**	**L**	**L**
Negligible	**M**	**L**	**L**	**L**	**L**

Step 1: Review each **"Hazard"** with identified safety **"Controls"** and determine RAC (See above)

"Probability" is the likelihood to cause an incident, near miss, or accident and identified as: Frequent, Likely, Occasional, Seldom, or Unlikely.

"Severity" is the outcome/degree if an incident, near miss, or accident did occur and identified as: Catastrophic, Critical, Marginal, or Negligible

Step 2: Identify the RAC (Probability/Severity) as E, H, M, or L for each "Hazard" on AHA. Annotate the overall highest RAC at the top of AHA.

RAC Chart

- **E = Extremely High Risk**
- **H = High Risk**
- **M = Moderate Risk**
- **L = Low Risk**

Job Steps	Hazards	Controls	EM 385-1-1	RAC
Arrival of new personnel at site.	Unfamiliarity with: site, general site hazards, project safety rules, chain of command, and emergency procedures.	• All personnel shall attend the site orientation training.	01.B.03 01.E.01 28	**M**
Visual site inspections and surveys.	Poor planning.	• Complete Job Safety Analysis for each task,." Use Hazard Assessment Resolution Program frequently – for each task to be completed.		**M**
	Heavy lifting, strains, and sprains.	• No individual employee is permitted to lift any object that weighs over 50 pounds. Proper lifting techniques shall be used. Multiple employees or the use of mechanical lifting devices are required for lifting objects over the 50-pound limit.	14.A.01	**M**
	Struck-by/against.	• Wear reflective warning vests when exposed to vehicular traffic. Personnel working on or near roads and only remain on road long enough to complete work. Personnel walking along roadway shall stay off roadway as far as possible and walk on the side facing traffic.	05.F	**M**
	Munitions and Explosives of Concern (MEC) / Unexploded Ordnance (UXO).	• Personnel shall attend site-specific MEC Awareness (and recognition) Training prior to the commencement of any site activities. UXO stand-by support for low probability UXO site.	01.B.01 33.A.01	**M**

Job Steps	Hazards	Controls	EM 385-1-1	RAC
Visual site inspections and surveys (continued).	Slips, trips, and falls.	• Keep work areas clear and maintain housekeeping. Personnel shall not jump from elevated surfaces. Personnel shall use caution when walking on rocky, slippery, or uneven terrain.	14.C.01-10	**M**
	Hand injuries.	• Items to be handled shall be inspected for sharp edges prior to being handled. Personnel shall wear leather gloves when handling sharp materials. Personnel shall be aware of and avoid pinch point hazards.	05.A.08	**L**
	Insect bites/West Nile virus.	• Wear PPE and tape joints to keep insects away from the skin. Use protective insect repellents containing N,N-diethyl-m-toluamide, such as, Deep Woods OFF, 3M Ultrathon, or equivalent and clothing insecticide preparations containing permethrins (Repel Permanone or equivalent) to prevent insect bites. Check limbs/body for insects/insect bites before showering. Notify Site Safety and Health Officer (SSHO) of flu-like symptoms.	06.D.01	**L**
	Contact dermatitis and poison ivy.	• Check around work areas to identify if poison ivy is present. Wear long-sleeve shirts/trousers or Tyvek® coveralls to avoid skin contact with plants or other skin irritants. Learn to identify poisonous plants. • Avoid unnecessary clearing of plant/vegetation areas. • Cover vegetation with plastic (visqueen) where sampling position raises exposure potential. Apply protective cream / lotion to exposed skin to prevent poison ivy or similar reactions. Identify workers known to contract poison ivy.	06.D.03	**L**
	Severe weather.	• The SSHO will monitor weather conditions each day in order to plan and prepare for hazardous conditions. The SSHO will identify a suitable tornado shelter at each work location. Work activities will be suspended prior to weather conditions becoming hazardous so that workers have ample time to seek shelter. Upon seeing lightning or hearing thunder, outdoor activities shall be suspended and personnel shall be evacuated to safe areas (inside vehicles, buildings, or tornado shelters as appropriate). Follow procedures outlined in the APP.	06.1	**L**
	Hazardous atmospheres.	• Personnel shall immediately notify the SSHO if odors are detected.		**L**
	Heat stress and cold stress.	• Follow procedures outlined in the APP.	06.I	**M**
	Fire.	• Smoking shall be permitted in designated areas. Vehicles shall not be parked in tall dry grass. • Engines shall be shut off before refueling. • A 10-B:C fire extinguisher shall be available when refueling. • Smoking shall not be permitted near fueling areas. Gasoline shall be stored in safety cans with flash arrestors and spring-loaded vents.	09.E.01 09.A.06 09.B.08	**M**

Equipment to be Used	Training Requirements/Competent or Qualified Personnel Name(s)	Inspection Requirements
Personal Protective Equipment - Level D: Hard hat Safety glasses Safety-toed boots Work gloves ANSI Class 2 reflective warning vests Equipment: Survey instrumentation Fire extinguishers Emergency eyewash First aid kit Deep-Woods Off or Ultrathon Repel Permanone Drinking water Weather radio or AM/FM radio	Competent Person (CP) / Qualified Person (QP): James Vigerust – CP/SSHO James Vigerust – QP/First Aid and CPR Training Requirements: Site safety orientation HAZWOPER 40-Hour MEC Awareness Lifting/back safety Fire extinguisher use Emergency procedures Biological hazard identification and control Tornado shelter locations National Lightning Safety Institute Lightning Safety procedures	Daily site safety inspection (SSHO) – James Vigerust Daily site safety inspection (QCO) – Housekeeping (daily) Fire extinguisher (weekly) Vehicle inspection daily Equipment and tools inspection daily and before use Survey areas for poisonous plants, insects, and animals Check body for ticks Verify tornado shelter available Monitor approaching storms

Table 5-1 Activity Hazard Analysis

Activity/Work Task: Site Surveys (utility)	Overall Risk Assessment Code (RAC)	L
Project Location: RSA-204 Redstone AL	**Risk Assessment Code (RAC) Matrix**	
Contract Number: W91ZLK-09-D-0006		
Date Prepared: July 2015		
Prepared by: James Vigerust/SSHO		
Reviewed by: Doug Russell/HSM		

Severity	Probability				
	Frequent	Likely	Occasional	Seldom	Unlikely
Catastrophic	E	E	H	H	M
Critical	E	H	H	M	L
Marginal	H	M	M	L	L
Negligible	M	L	L	L	L

Notes: (activity description)
A licensed subcontractor will conduct a utility survey to locate subsurface drilling hazards using multiple geophysical methods, including electromagnetic induction and ground penetrating radar. Utility lines found in the immediate vicinity of the proposed limits of intrusive activity will be marked using color-coded surveyor paint.
The completed wells will be surveyed by an Alabama-licensed Land Surveyor.

Step 1: Review each **"Hazard"** with identified safety **"Controls"** and determine RAC (See above)

"Probability" is the likelihood to cause an incident, near miss, or accident and identified as: Frequent, Likely, Occasional, Seldom or Unlikely.

"Severity" is the outcome/degree if an incident, near miss, or accident did occur and identified as: Catastrophic, Critical, Marginal, or Negligible

Step 2: Identify the RAC (Probability/Severity) as E, H, M, or L for each "Hazard" on AHA. Annotate the overall highest RAC at the top of AHA.

RAC Chart

- **E = Extremely High Risk**
- **H = High Risk**
- **M = Moderate Risk**
- **L = Low Risk**

Job Steps	Hazards	Controls	RAC
Walking the Site Lifting Equipment and Materials	Slips, trips, and falls	• Inspect work areas for washes, potholes, or other surface irregularities that could cause slips, trips or falls. • Always establish good footing. • Maintain good housekeeping. Keep walkways clear of debris and tools.	L
	Muscle strains	• Observe 50 lb individual lifting limit. • Don't lift and twist. • Get help for loads greater than 60 lbs. • Train workers in safe lifting techniques.	L
Mobile Equipment	Striking workers or equipment	• Use spotters when backing. • Inspect area for overhead and underground hazards. • Know the safest route to and from your work area. • Use flags, traffic cones to control traffic.	L

5—AHA—Site Surveys

Job Steps	Hazards	Controls	RAC
Changed or Unanticipated Conditions	Safety or health hazards that may be derived from changed or unanticipated conditions	• Modify the AHA as often as necessary to address new or unanticipated hazards. Use ”Job Safety Analysis” form to facilitate field documentation.	**NA**

Equipment to be Used	Training Requirements/Competent or Qualified Personnel name(s)	Inspection Requirements
• Level D personal protection: safety boots, Safety eyewear, long pants protection, abrasion resistant gloves	• Tailgate safety meeting • HAZWOPER 40-hour • HAZWOPER 8-hour refresher • Worker must be trained in the safe application of task specific tools and materials • James Vigerust – CP/SSHO	• Inspect all equipment at least daily • Utility clearance checklist • Inspect non-construction equipment and power tools per manufacturer requirements.

Table 5-1 Activity Hazard Analysis

Activity/Work Task: Vegetation Removal	Overall Risk Assessment Code (RAC) (Use highest code)	**M**
Project Location: RSA-204 Redstone AL	**Risk Assessment Code (RAC) Matrix**	
Contract Number: W91ZLK-09-D-0006		
Date Prepared: 03/30/2015		
Prepared by (Name/Title): James Vigerust Health and Safety		
Reviewed by (Name/Title): Doug Russell/HSM		

Severity	**Probability**				
	Frequent	Likely	Occasional	Seldom	Unlikely
Catastrophic	**E**	**E**	**H**	**H**	**M**
Critical	**E**	**H**	**H**	**M**	**L**
Marginal	**H**	**M**	**M**	**L**	**L**
Negligible	**M**	**L**	**L**	**L**	**L**

Notes: (Field Notes, Review Comments, etc.)

Step 1: Review each **"Hazard"** with identified safety **"Controls"** and determine RAC (See above)

"Probability" is the likelihood to cause an incident, near miss, or accident and identified as: Frequent, Likely, Occasional, Seldom, or Unlikely.

"Severity" is the outcome/degree if an incident, near miss, or accident did occur and identified as: Catastrophic, Critical, Marginal, or Negligible

Step 2: Identify the RAC (Probability/Severity) as E, H, M, or L for each "Hazard" on AHA. Annotate the overall highest RAC at the top of AHA.

RAC Chart

- **E = Extremely High Risk**
- **H = High Risk**
- **M = Moderate Risk**
- **L = Low Risk**

Job Steps	Hazards	Controls	EM 385-1-1	RAC
Arrival of new personnel at site.	Unfamiliarity with: site, general site hazards, project safety rules, chain of command, and emergency procedures.	• All personnel shall attend the site orientation training.	01.B.03 01.E.01 28	**M**
Vegetation removal.	Poor planning.	• Complete Job Safety Analysis for each task, as specified in CMS-710-05-PR-01700 "Work Area Hazard Assessment Process." Use Hazard Assessment Resolution Program frequently – for each task to be completed.		**M**
	Heavy lifting, strains, and sprains.	• No individual employee is permitted to lift any object that weighs over 50 pounds. Proper lifting techniques shall be used. Multiple employees or the use of mechanical lifting devices are required for lifting objects over the 50-pound limit.	14.A.01	**M**
	Struck-by/against.	• Wear reflective warning vests when exposed to vehicular traffic. Personnel working on or near roads and only remain on road long enough to complete work. Personnel walking along roadway shall stay off roadway as far as possible and walk on the side facing traffic.	05.F	**M**
	Intrusive activities.	• Verify a complete utility survey and evaluation by competent person is complete prior to intrusive activities.	25.A.01	**M**
	Slips, trips, and falls.	• Keep work areas clear and maintain housekeeping. Personnel shall not jump from elevated surfaces. Personnel shall use caution when walking on rocky, slippery, or uneven terrain.	14.C.01-10	**M**

Job Steps	Hazards	Controls	EM 385-1-1	RAC
Vegetation removal (continued).	Hand injuries.	• Items to be handled shall be inspected for sharp edges prior to being handled. Personnel shall wear leather gloves when handling sharp materials. Personnel shall be aware of and avoid pinch point hazards.	05.A.08	**L**
	Use of heavy equipment.	• Only qualified personnel shall be permitted to operate equipment. Heavy equipment shall be inspected daily after the initial U.S. Army Corps of Engineers inspection (and documented.) Do not use unsafe equipment. All equipment shall have backing alarms. All equipment shall be operated at safe speeds and in a safe manner. Equipment operators shall wear safety belts. Personnel are only permitted to approach equipment after a signal from the operator. Ground personnel, working near heavy equipment, shall wear high visibility conspicuity vests. Ground personnel shall not enter the swing radius of equipment. Ground personnel shall not position themselves between equipment and stationary objects. Personnel shall verify all mechanical guards are in place and functioning properly. Moving equipment shall be equipped with a back-up alarm. All equipment shall be shut down with energies dissipated prior to performing maintenance activities - lock out/tag out procedures may apply. Only qualified mechanics shall work on or repair heavy equipment. Heavy equipment shall be equipped with Falling Object Protective Structure. Ground personnel shall stay clear at least twice the distance of the height of the tree being pushed over.	18.A 18.G 18.B 05.F 18.B.12	**M**
	Injury from chain saws, wood/falling trees, chips, cuts, and noise.	• Chain saw operators shall wear a specially designed helmet system (consisting of head, face, and hearing protection). Use gloves and chaps at all times when using saw. Operators shall wear chain saw protective boots with steel toes. Secure loose fitting clothing with duct tape. Keep other personnel at least two tree lengths away from tree being felled. Operators shall have escape routes planned that are at 45 degrees from the projected direction of the falling tree. Keep escape routes clear of all tools, materials, and wood/brush. Always cut away from the body. Shut off chain saws when walking between work areas. Have spotter assist when falling large or tall trees. Only cut trees, logs, or branches from ground height. Shut off engines before freeing pinched chains. Chain saw operators shall always hold the saw with both hands during cutting operations. Inspect chain saw before each use. Do not use saws in which any safety feature is not functioning. Frequently check and adjust tension on chain. Do not use saws with or dull cutters. Do not increase force used as cutters become dull. The idle speed shall be properly adjusted to prevent the chain from moving when the engine is idling. Keep bar groove clean. Use only new chains or professionally sharpened chains. Replace sprockets, which show signs of wear. Remain alert to kickback hazards and keep a firm, proper grip on chain saw at all times. All chain saws shall be equipped with automatic chain brake and other anti-kickback devices. Use wedges to prevent binding of the chain. Do not cut with the tip (nose) of the bar. Do not use dull chains. Do not overreach with chain saw. Personnel shall not operate chain saws above shoulder height. Personnel shall be familiar with cutting techniques.	13.F 13.A 31.C	**M**

Job Steps	Hazards	Controls	EM 385-1-1	RAC
Vegetation removal (continued).	Tree pruning, falling, and brush removal/chipping.	• Machete use is prohibited. Personnel operating weed whackers shall wear hearing protection and eye/face protection. Steel blade use on weed whackers is prohibited. The procedures outlined in *Safety and Health Requirements Manual*, Sections 31.C, 31.D and 31.E shall be conveyed to all personnel involved in the operations. Remain clear of feed and discharge chutes on chippers.	31.C 31.D 31.E	**M**
	Fatigue.	• Chainsaw and equipment operators shall be given ample rest breaks.		**M**
	Insect bites/West Nile virus.	• Wear personal protective equipment (PPE) and tape joints to keep insects away from the skin. Use protective insect repellents containing N,N-diethyl-m-toluamide, such as, 3M Ultrathon or equivalent and clothing insecticide preparations containing permethrins (Repel Permanone or equivalent) to prevent insect bites. Check limbs/body for insects/insect bites before showering. Notify Site Safety and Health Officer (SSHO) of flu-like symptoms.	06.D.01	**L**
	Contact dermatitis and poison ivy.	• Check around work areas to identify if poison ivy is present. Wear long-sleeve shirts/trousers or Tyvek® coveralls to avoid skin contact with plants or other skin irritants. Learn to identify poisonous plants. • Avoid unnecessary clearing of plant/vegetation areas. • Cover vegetation with plastic (visqueen) where sampling position raises exposure potential. Apply protective cream/lotion to exposed skin to prevent poison ivy or similar reactions. Identify workers who are known to contract poison ivy.	06.D.03	**L**
	Severe weather.	• The SSHO will monitor weather conditions each day in order to plan and prepare for hazardous conditions. The SSHO will identify a suitable tornado shelter at each work location. Work activities will be suspended prior to weather conditions becoming hazardous so that workers have ample time to seek shelter. Upon seeing lightning or hearing thunder, outdoor activities shall be suspended and personnel shall be evacuated to safe areas (inside vehicles, buildings, or tornado shelters as appropriate). Follow procedures outlined in the APP.	06.I	**L**
	Hazardous atmospheres.	• Personnel shall immediately notify the SSHO if odors are detected.		**L**
	Heat stress and cold stress.	• Follow procedures outlined in the Site Safety and Health Plan.	06.I	**M**
	Dust.	• Dust shall be monitored and controlled. PPE use is required when working in contaminated areas.	28	**L**
	Fire.	• Smoking shall be permitted in designated areas. Vehicles shall not be parked in tall dry grass. • Engines shall be shut off before refueling. A 10-B:C fire extinguisher shall be available when refueling. Smoking shall not be permitted near fueling areas. Gasoline shall be stored in safety cans with flash arrestors and spring-loaded vents.	09.E.01 09.A.06 09.B.08	**L**

Equipment to be Used	Training Requirements/Competent or Qualified Personnel Name(s)	Inspection Requirements
Personal Protective Equipment - Level D - Modified: Hard hat Safety glasses Safety-toed boots Work gloves ANSI Class 2 reflective warning vests Disposable coveralls and protective gloves (when contact with irritating plants possible) Helmet systems for chain saw use Protective chaps for chain saw use Hearing protection Equipment: Magnetometers Geophysics instruments Excavator Fire extinguishers Emergency eyewash First aid kit Deep-Woods Off or Ultrathon Repel Permanone Drinking water Weather radio or AM/FM radio Chain saws Extra chains Plastic or wood wedges	Competent Person (CP) / Qualified Person (QP): James Vigerust – CP/SSHO James Vigerust – QP/First Aid and CPR Training Requirements: Site safety orientation MEC awareness Applicable AHAs HAZWOPER 40-Hour Qualified equipment operators Lifting/back safety Fire extinguisher use Biological hazard identification and control Emergency procedures Tornado shelter locations National Lightning Safety Institute Lightning Safety procedures	Daily site safety inspection (SSHO) – James Vigerust Daily site safety inspection (QCO) – Check Known Allergies Questionnaire Housekeeping (daily) Fire extinguisher (weekly) Vehicle inspection daily Overhead and underground utilities Mechanized equipment (daily) Equipment and tools inspection daily and before use Survey areas for poisonous plants, insects, and animals Check body for ticks Verify tornado shelter available Monitor approaching storms

Table 5-1 Activity Hazard Analysis

Activity/Work Task: Groundwater Sampling	Overall Risk Assessment Code (RAC) (Use highest code)	**M**
Project Location: RSA-204 Redstone AL	**Risk Assessment Code (RAC) Matrix**	
Contract Number: W91ZLK-09-D-0006		
Date Prepared: 03/31/15		
Prepared by (Name/Title): James Vigerust Health and Safety		
Reviewed by (Name/Title): Doug Russell/HSM		
Notes: (Field Notes, Review Comments, etc.)		

Severity	**Probability**				
	Frequent	Likely	Occasional	Seldom	Unlikely
Catastrophic	**E**	**E**	**H**	**H**	**M**
Critical	**E**	**H**	**H**	**M**	**L**
Marginal	**H**	**M**	**M**	**L**	**L**
Negligible	**M**	**L**	**L**	**L**	**L**

Step 1: Review each **"Hazard"** with identified safety **"Controls"** and determine RAC (See above)

"Probability" is the likelihood to cause an incident, near miss, or accident and identified as: Frequent, Likely, Occasional, Seldom, or Unlikely.

"Severity" is the outcome/degree if an incident, near miss, or accident did occur and identified as: Catastrophic, Critical, Marginal, or Negligible

Step 2: Identify the RAC (Probability/Severity) as E, H, M, or L for each "Hazard" on AHA. Annotate the overall highest RAC at the top of AHA.

RAC Chart

- **E = Extremely High Risk**
- **H = High Risk**
- **M = Moderate Risk**
- **L = Low Risk**

Job Steps	Hazards	Controls	EM 385-1-1	RAC
Sampling groundwater monitoring wells	Failure to properly plan daily activities.	• Complete a Job Safety Analysis (JSA) for each task, as specified in CMS-710-05-PR-01700 "Work Area Hazard Assessment Process". Use Hazard Assessment Resolution Program frequently – for each task to be completed.	01.A.09	**M**
	Hand injuries.	• Items to be handled shall be inspected for sharp edges prior to being handled. Personnel shall wear leather gloves when handling sharp materials. Personnel shall be aware of and avoid pinch point hazards.	05.A.08	**L**
	Noise.	• Equipment operators and ground personnel working near heavy equipment shall wear hearing protection to reduce exposures to below the Occupational Safety and Health Administration limits.	05.C	**L**
	Chemical contamination.	• Follow procedures in Safety and Health Plan (SSHP). Wear disposable glove, at a minimum. Boot covers and disposable coverall may be necessary. Air monitoring required per SSHP.	05.A	**L**
	Struck by equipment.	• Ground personnel, working near heavy equipment, shall wear American National Standards Institute Class 2 high-visibility conspicuity vests. Ground personnel shall not enter the swing radius of excavators and stay clear of other equipment.	05.F	**M**

Job Steps	Hazards	Controls	EM 385-1-1	RAC
Sampling groundwater monitoring wells (continued).	Heavy lifting, strains, and sprains.	• No individual employee is permitted to lift any object that weighs over 50 pounds. Proper lifting techniques shall be used. Multiple employees or the use of mechanical lifting devices are required for lifting objects over the 50-pound limit. Do not over-load coolers.	14.A.01	**M**
	Insect bites/West Nile virus.	• Wear PPE and tape joints to keep insects away from the skin. Use protective insect repellents containing N,N-diethyl-m-toluamide, such as, 3M Ultrathon or equivalent and clothing insecticide preparations containing permethrins (Repel Permanone or equivalent) to prevent insect bites. Check limbs/body for insects/insect bites before showering. Notify Site Safety and Health Officer (SSHO) of flu-like symptoms.	06.D.01	**L**
	Contact dermatitis and poison ivy.	• Check around work areas to identify if poison ivy is present. Wear long-sleeve shirts/trousers or Tyvek® coveralls to avoid skin contact with plants or other skin irritants. Learn to identify poisonous plants. • Cover vegetation with plastic (visqueen) where sampling position raises exposure potential. Apply protective cream/lotion to exposed skin to prevent poison ivy or similar reactions. Identify workers who are known to contract poison ivy.	06.D.03	**L**
	Slips, trips, and falls.	• Keep work areas clear and maintain housekeeping. Personnel shall not jump from elevated surfaces. Personnel shall use caution when walking on rocky, slippery, or uneven terrain.	14.C.01-10	**M**
	Fire.	• Fire extinguishers shall be available in work areas. Smoking shall only be allowed in designated areas.	09.E.01	**L**
	Use of sampling tools.	• All sampling tools shall be inspected in accordance with manufacturer's recommendations.	13.A.02	**L**
	Heat stress and cold stress.	• Follow procedures outlined in the SSHP.	06.I	**M**

Job Steps	Hazards	Controls	EM 385-1-1	RAC
Sampling groundwater monitoring wells (continued).	Severe weather.	• The SSHO will monitor weather conditions each day in order to plan and prepare for hazardous conditions. The SSHO will identify a suitable tornado shelter at each work location. Work activities will be suspended prior to weather conditions becoming hazardous so that workers have ample time to seek shelter. Upon seeing lightning or hearing thunder, outdoor activities shall be suspended and personnel shall be evacuated to safe areas (inside vehicles, buildings, or tornado shelters as appropriate). Follow procedures outlined in the Accident Prevention Plan.	06.I	**L**
	Generator or 12 VDC sampling pump use	• A copy of the sampling pump manual shall be available at the job site. • Use of hard or extra hard duty extension cords required. • Always connect the negative battery terminal to ground away from the battery. Make next connection to auxiliary positive connection away from battery. • Level D PPE minimum required. • Engine on vehicles shall be off during connections to battery. • Route pump controller conductors away from vehicle moving parts and pinch points that could compromise wiring insulation. • Portable generators shall be equipped with an acceptable GFCI down stream of standard breakers. • Inspect all cord or plug devices for compromised insulation or missing conductor circuit parts. • Keep generator and cords away from immediate sampling location to avoid noise and trip hazards.		**M**

Equipment to be Used	Training Requirements/Competent or Qualified Personnel name(s)	Inspection Requirements
Personal Protective Equipment - Level D Hard hat Safety glasses Safety-toed boots Work gloves Nitrile gloves ANSI Class 2 reflective warning vests Disposable gloves (nitrile) Disposable boot covers Equipment: Fire extinguishers Support trucks and generators First aid kit Deep-Woods Off or Ultrathon Repel Permanone Drinking water Weather radio Vehicles and support trailers Air monitoring equipment Communication devices	Competent Person (CP) / Qualified Person (QP): James Vigerust – CP/SSHO James Vigerust – QP/First Aid and CPR Training Requirements: Site safety orientation HAZWOPER 40-Hour Lifting/back safety Fire extinguisher use Emergency procedures Biological hazard identification and control Tornado shelter locations National Lightning Safety Institute Lightning Safety procedures	Daily site safety inspection (SSHO) – James Vigerust Daily site safety inspection (QCO) – Housekeeping (daily) Fire extinguisher (weekly) Vehicle and equipment inspection daily Equipment and tools inspection daily and before use Survey areas for poisonous plants, insects, and animals Check body for ticks Verify tornado shelter available Monitor approaching storms Check communication devices at each site location before work

Table 5-1 Activity Hazard Analysis

Activity/Work Task: Hand Auger Operations	Overall Risk Assessment Code (RAC)	**M**
Project Location: RSA-204 Redstone AL	**Risk Assessment Code (RAC) Matrix**	
Contract Number: W91ZLK-09-D-0006		
Date Prepared: July 2015		
Prepared by: James Vigerust/SSHO		
Reviewed by: Doug Russell/HSM		

Severity	**Probability**				
	Frequent	Likely	Occasional	Seldom	Unlikely
Catastrophic	**E**	**E**	**H**	**H**	**M**
Critical	**E**	**H**	**H**	**M**	**L**
Marginal	**H**	**M**	**M**	**L**	**L**
Negligible	**M**	**L**	**L**	**L**	**L**

Notes: (Field Notes, Review Comments, etc.)

Utility Clearance will be verified by driving hand auger at each drilling location to a minimum of 5 feet bgs prior to drilling.

Step 1: Review each **"Hazard"** with identified safety **"Controls"** and determine RAC (See above)

"Probability" is the likelihood to cause an incident, near miss, or accident and identified as: Frequent, Likely, Occasional, Seldom or Unlikely.

"Severity" is the outcome/degree if an incident, near miss, or accident did occur and identified as: Catastrophic, Critical, Marginal, or Negligible

Step 2: Identify the RAC (Probability/Severity) as E, H, M, or L for each "Hazard" on AHA. Annotate the overall highest RAC at the top of AHA.

RAC Chart

- **E = Extremely High Risk**
- **H = High Risk**
- **M = Moderate Risk**
- **L = Low Risk**

Job Steps	Hazards	Controls	RAC
Hand Auger Operations	Pinch points	• Wear cut-resistant gloves. • Use caution when lifting (hand over hand). • Assemble the auger with a 2-foot, 3-foot, or 4-foot shaft when using bayonet clips. • Apply 0.5-inch Teflon® tape to all threads to facilitate disassembly.	**L**
	Sunburn	• Wear sun screen (minimum SPF 15) to avoid sun burn.	**L**
	Caught in/between parts	• Identify and understand parts of equipment which may cause injuries. • Before operating the equipment, read, understand and follow the manufacturer's operating manual and safety decals on the equipment.	**L**

6—AHA—Hand Auger Operations

Job Steps	Hazards	Controls	RAC
Hand Auger Operations (continued)	Caught in/between parts (continued)	• Assure screw-together couplings, slip together hex or slip together round “quick-connect” couplings are secure to protect from failure of these parts of equipment during operation. • Use abrasion resistant work gloves. • Maintain all equipment in a safe condition. • Ensure that extension rods are used between the T-Handle and the auger bucket. • Use slide hammer to drive soil core liners into resistant soils.	L
	Sprains and strains Repetitive Motion	• Clear walkways and work area of tools and material. • Use buddy system, working in pairs. • Limit lift weight to 50 pounds. • Bend at the knees, keeping back straight and vertical, lifting directly over sample cores. • Use slide hammer to drive soil core liners into resistant soils. • Carry out a physical warm up prior to starting work to allow for maximum muscle flexibility. • Observe proper lifting techniques. • Use mechanical lifting equipment (hand carts, trucks) to move large, awkward loads. • Avoid twisting, jerking motions while operating auger. • Use firm footing and leverage; crouch/squat, bend at the knees. • Take breaks, as needed.	M
	Personal hygiene	• No eating, drinking, smoking, chewing gum or tobacco, or applying of cosmetics or sun screen in work area. Provide a clean space, separated from the work area, for these activities. • Wash hands and face upon leaving the work area for breaks and lunch. Upon leaving the work area, wash and dry face and hands.	L
Changed or Unanticipated Conditions	Safety or health hazards that may be derived from changed or unanticipated conditions	• Modify the AHA as often as necessary to address new or unanticipated hazards. Use ”Job Safety Analysis” form to facilitate field documentation.	L

6—AHA—Hand Auger Operations

Equipment to be Used	Training Requirements/Competent or Qualified Personnel name(s)	Inspection Requirements
• Hand auger • Level D personal protection: Hard hat, safety boots, Safety eyewear, long pants, hearing protection, abrasion resistant gloves	• Tailgate safety meeting • HAZWOPER 40-hour • HAZWOPER 8-hour refresher • Worker must be trained in the safe application of task specific tools and materials • James Vigerust – CP/SSHO	• Inspect all equipment at least daily • Inspect non-construction equipment and power tools per manufacturer requirements.

Table 5-1 Activity Hazard Analysis

Activity/Work Task: Borehole Clearing	Overall Risk Assessment Code (RAC)	**M**
Project Location: RSA-204 Redstone AL	**Risk Assessment Code (RAC) Matrix**	
Contract Number: W91ZLK-09-D-0006		
Date Prepared: July 2015		
Prepared by: James Vigerust/SSHO		
Reviewed by: Doug Russell/HSM		
Notes: (Field Notes, Review Comments, etc.).		

Severity	**Probability**				
	Frequent	Likely	Occasional	Seldom	Unlikely
Catastrophic	**E**	**E**	**H**	**H**	**M**
Critical	**E**	**H**	**H**	**M**	**L**
Marginal	**H**	**M**	**M**	**L**	**L**
Negligible	**M**	**L**	**L**	**L**	**L**

Step 1: Review each **"Hazard"** with identified safety **"Controls"** and determine RAC (See above)

"Probability" is the likelihood to cause an incident, near miss, or accident and identified as: Frequent, Likely, Occasional, Seldom or Unlikely.

"Severity" is the outcome/degree if an incident, near miss, or accident did occur and identified as: Catastrophic, Critical, Marginal, or Negligible

Step 2: Identify the RAC (Probability/Severity) as E, H, M, or L for each "Hazard" on AHA. Annotate the overall highest RAC at the top of AHA.

RAC Chart

- **E = Extremely High Risk**
- **H = High Risk**
- **M = Moderate Risk**
- **L = Low Risk**

Job Steps	Hazards	Controls	RAC
Establish Work Areas and Exclusion Zones	Slips/trips/falls; traffic	• Level D PPE with High Visibility/Reflective Vest; plan routes around site; use spotter(s).	**L**
Ensure Borings Have Been Marked and cleared for Underground Utilities	Damage to property; personal injury	• Observe and record utility markings.	**L**
Deploy Tools; Container; Decontamination Area	Slips/trips/falls; physical strain	• Use ergonomic lifting practices; evaluate loads >50lbs or awkward shaped materials for buddy system; use appropriate tools for the job.	**L**
Clear Asphalt or Concrete Using Direct Push Rig and Star-Bit (if necessary)	Hearing damage; physical injury; damage to property	• Use approved hearing protection (ear plugs and/or ear muffs); identify and avoid pinch points and cutting surfaces; create work area exclusion zone and utilize debris shield if in area of high pedestrian traffic or surface improvements.	**L**

7—AHA—Borehole Clearing

Job Steps	Hazards	Controls	RAC
Clear Boring(s)/Injection Point(s) • By Hand Auger – Advance hand auger manually – Empty cutting bucket – Repeat	Physical strain/injury; hand injury; damage to property	• Level D PPE with cut-resistant (Level II), hard hat, and safety glasses are a must; identify and avoid contact with cutting surfaces; work within an exclusion zone and be aware of tool swing; start slow, warm-up and use correct ergonomic movements.	M
• Using Air Knife – Lay out lines and wand – Start power – Advance cutting wand – Remove cuttings – Repeat until finished – Turn off power	Physical strain/injury; hand injury; projectiles; hit by/struck by; damage to property	• Use approved hearing protection (ear plugs and/or ear muffs) • Level D PPE as above with face shield and hearing protection; identify cutting end of tools and manage high pressure lines; use a spotter to attend to lines; create work area exclusion zone; debris shield if in area of high pedestrian traffic or surface improvements; use whip-checks at every union/fitting; do not leave pressurized equipment unattended; de-energize tool and open bleed valves when not in use.	L
Backfill Cleared Borings	Physical strain	• Ergonomic lifting and work practices.	L
Patch or Temporary Cover Borings	Physical strain; damage to property	• Ergonomic lifting; delineate work area; create exclusion zone until patch is cured	L
Waste Management/Cleanup	Physical strain; traffic; hit by/struck by	• Ergonomic work practices; high visibility and Level D PPE; plan routes; use spotter; get direction from client/consultant regarding investigation derived waste and containers for IDW. Packaging and incidental trash is not IDW.	L
Changed or Unanticipated Conditions	Safety or health hazards that may be derived from changed or unanticipated conditions	• Modify the AHA as often as necessary to address new or unanticipated hazards. Use ”Job Safety Analysis” form to facilitate field documentation	L

7—AHA—Borehole Clearing

Equipment to be Used	Training Requirements/Competent or Qualified Personnel name(s)	Inspection Requirements
• Direct push rig • Air Knife rig (if necessary) • Hand auger tool • Misc. hand tools • Level D personal protection: hard hat, safety boots, safety eyewear, long sleeved shirts and pants, abrasion resistant gloves	• Tailgate safety meeting • HAZWOPER 40-hour • HAZWOPER 8-hour refresher • Workers must be trained in the safe operation of all assigned equipment and processes • James Vigerust – CP/SSHO	• Daily rig inspection sheet requirement. Monitor for hydraulic line leaks. • Inspection prior to use for proper high pressure line fittings and whip-checks; attend to high pressure lines. • Use clean, maintained tools for the job they were designed for. • Use clean, maintained tools for the job they were designed for. • Inspect non-construction equipment and power tools per manufacturer requirements.

Table 5-1 Activity Hazard Analysis

Activity/Work Task: Well Closure & Installation	Overall Risk Assessment Code (RAC) (Use highest code)	**M**
Project Location: RSA-204 Redstone AL	**Risk Assessment Code (RAC) Matrix**	
Contract Number: W91ZLK-09-D-0006		
Date Prepared: 03/31/2015		
Prepared by (Name/Title): James Vigerust Health and Safety		
Reviewed by (Name/Title): Winston Russell/HSE Manager		
Notes: (Field Notes, Review Comments, etc.)		

Severity	Probability: Frequent	Likely	Occasional	Seldom	Unlikely
Catastrophic	E	E	H	H	M
Critical	E	H	H	M	L
Marginal	H	M	M	L	L
Negligible	M	L	L	L	L

Step 1: Review each **"Hazard"** with identified safety **"Controls"** and determine RAC (See above)

"Probability" is the likelihood to cause an incident, near miss, or accident and identified as: Frequent, Likely, Occasional, Seldom, or Unlikely.

"Severity" is the outcome/degree if an incident, near miss, or accident did occur and identified as: Catastrophic, Critical, Marginal, or Negligible

Step 2: Identify the RAC (Probability/Severity) as E, H, M, or L for each "Hazard" on AHA. Annotate the overall highest RAC at the top of AHA.

RAC Chart

- **E = Extremely High Risk**
- **H = High Risk**
- **M = Moderate Risk**
- **L = Low Risk**

Job Steps	Hazards	Controls	EM 385-1-1	RAC
Well closure and installation.	Failure to properly plan daily activities.	• Complete a Job Safety Analysis (JSA) for each task, as specified in CMS-710-05-PR-01700 "Work Area Hazard Assessment Process". Use Hazard Assessment Resolution Program frequently – for each task to be completed.	01.A.09	M
	Hand injuries.	• Items to be handled shall be inspected for sharp edges prior to being handled. Personnel shall wear leather gloves when handling sharp materials. Personnel shall be aware of and avoid pinch point hazards.	05.A.08	L
	Noise.	• Equipment operators and ground personnel working near heavy equipment shall wear hearing protection to reduce exposures to below the Occupational Safety and Health Administration limits.	05.C	L
	Chemical contamination.	• Follow procedures in Safety and Health Plan (SSHP). Wear disposable glove, at a minimum. Boot covers and disposable coverall may be necessary. Air monitoring required per SSHP.	05.A	L
	Struck by equipment.	• Ground personnel, working near heavy equipment, shall wear American National Standards Institute Class 2 high-visibility conspicuity vests. Ground personnel shall not enter the swing radius of excavators and stay clear of other equipment.	05.F	M

Job Steps	Hazards	Controls	EM 385-1-1	RAC
Well closure and installation (continued).	Heavy lifting, strains, and sprains.	• No individual employee is permitted to lift any object that weighs over 50 pounds. Proper lifting techniques shall be used. Multiple employees or the use of mechanical lifting devices are required for lifting objects over the 50-pound limit. Do not over-load coolers.	14.A.01	**M**
	Insect bites/West Nile virus.	• Wear PPE and tape joints to keep insects away from the skin. Use protective insect repellents containing N,N-diethyl-m-toluamide, such as, 3M Ultrathon or equivalent and clothing insecticide preparations containing permethrins (Repel Permanone or equivalent) to prevent insect bites. Check limbs/body for insects/insect bites before showering. Notify Site Safety and Health Officer (SSHO) of flu-like symptoms.	06.D.01	**L**
	Contact dermatitis and poison ivy.	• Check around work areas to identify if poison ivy is present. Wear long-sleeve shirts/trousers or Tyvek® coveralls to avoid skin contact with plants or other skin irritants. Learn to identify poisonous plants. • Cover vegetation with plastic (visqueen) where sampling position raises exposure potential. Apply protective cream/lotion to exposed skin to prevent poison ivy or similar reactions. Identify workers who are known to contract poison ivy.	06.D.03	**L**
	Slips, trips, and falls.	• Keep work areas clear and maintain housekeeping. Personnel shall not jump from elevated surfaces. Personnel shall use caution when walking on rocky, slippery, or uneven terrain.	14.C.01-10	**M**
	Fire.	• Fire extinguishers shall be available in work areas. Smoking shall only be allowed in designated areas.	09.E.01	**L**
	Use of sampling tools.	• All sampling tools shall be constructed of non-sparking materials. Hand tools shall be inspected daily and before each use. Tools, which are damaged, shall be removed from service. Personnel shall work in a manner and pace to reduce strains and overexertion.	13.A.02	**L**
	Heat stress and cold stress.	• Follow procedures outlined in the SSHP.	06.I	**M**

Job Steps	Hazards	Controls	EM 385-1-1	RAC
	Severe weather.	• The SSHO will monitor weather conditions each day in order to plan and prepare for hazardous conditions. The SSHO will identify a suitable tornado shelter at each work location. Work activities will be suspended prior to weather conditions becoming hazardous so that workers have ample time to seek shelter. Upon seeing lightning or hearing thunder, outdoor activities shall be suspended and personnel shall be evacuated to safe areas (inside vehicles, buildings, or tornado shelters as appropriate). Follow procedures outlined in the Accident Prevention Plan.	06.I	**L**
Well closure and installation (continued).	Injury from DPT, drill rig use.	• A copy of the drill rig manual shall be available at the job site. • All components of the rig that has a direct bearing on the safety of the operation shall be inspected at the beginning of each shift and when possible, observed during operation. Do not use rig if it is not in a safe operating condition. The rig shall be positioned in a level fashion with stands and outriggers set. All guards for moving machinery shall be in place. • Be aware of pinch-point hazards and work in a manner to prevent injuries. Keep hands out of areas that may present a pinching hazard and personnel shall not position themselves between equipment. Crewmembers shall not wear loose coveralls, clothing, or jewelry. The operator shall verbally alert employees and visually ensure employees are clear from dangerous parts of equipment prior to starting or engaging equipment. • Be aware of and avoid hot surfaces from heat generated from engine and rope friction (such as cathead). • Drilling equipment shall be equipped with two easily accessible emergency shutdown devices, one for the operator and one for the helper. All crewmembers, including geologists, shall know the location and operation of the kill switches. • Augers shall be equipped with an auger guard or position sensor brake. Drill rods shall be neither run nor rotated through rod slipping devices: no more than one foot of drill rod column shall be hoisted above the top of the drill mast. Drill rod tool joints shall not be made up, tightened, or loosened while the rod column is supported by a rod slipping device. Clean augers or other tools only when rotating/actuating mechanisms are in neutral and stopped. Use long handle shovels to remove auger spoils.		**M**

Equipment to be Used	Training Requirements/Competent or Qualified Personnel name(s)	Inspection Requirements
Personal Protective Equipment - Level D Hard hat Safety glasses Safety-toed boots Work gloves Nitrile gloves ANSI Class 2 reflective warning vests Disposable gloves (nitrile) Disposable boot covers Equipment: Fire extinguishers Drill or DPT rig First aid kit Deep-Woods Off or Ultrathon Repel Permanone Drinking water Weather radio Vehicles and support trailers Air monitoring equipment	Competent Person (CP) / Qualified Person (QP): James Vigerust – CP/SSHO James Vigerust – QP/First Aid and CPR Training Requirements: Site safety orientation HAZWOPER 40-Hour Lifting/back safety Fire extinguisher use Emergency procedures Biological hazard identification and control Tornado shelter locations National Lightning Safety Institute Lightning Safety procedures	Daily site safety inspection (SSHO) – James Vigerust Daily site safety inspection (QCO) – Housekeeping (daily) Fire extinguisher (weekly) Vehicle and equipment inspection daily Underground/overhead utilities Equipment and tools inspection daily and before use Survey areas for poisonous plants, insects, and animals Check body for ticks Verify tornado shelter available Monitor approaching storms

Table 5-1 Activity Hazard Analysis

Activity/Work Task: Well Installation and Development Using Sonic Drilling Operations	Overall Risk Assessment Code (RAC) (Use highest code)	**M**
Project Location: RSA-204 Redstone AL	**Risk Assessment Code (RAC) Matrix**	
Contract Number: W91ZLK-09-D-0006		
Date Prepared: July 2015		
Prepared by: James Vigerust/SSHO		
Reviewed by: Doug Russell/HSM		
Notes: (Field Notes, Review Comments, etc.)		

Severity	**Probability**				
	Frequent	Likely	Occasional	Seldom	Unlikely
Catastrophic	**E**	**E**	**H**	**H**	**M**
Critical	**E**	**H**	**H**	**M**	**L**
Marginal	**H**	**M**	**M**	**L**	**L**
Negligible	**M**	**L**	**L**	**L**	**L**

Step 1: Review each **"Hazard"** with identified safety **"Controls"** and determine RAC (See above)

"Probability" is the likelihood to cause an incident, near miss, or accident and identified as: Frequent, Likely, Occasional, Seldom or Unlikely.

"Severity" is the outcome/degree if an incident, near miss, or accident did occur and identified as: Catastrophic, Critical, Marginal, or Negligible

Step 2: Identify the RAC (Probability/Severity) as E, H, M, or L for each "Hazard" on AHA. Annotate the overall highest RAC at the top of AHA.

RAC Chart

- **E = Extremely High Risk**
- **H = High Risk**
- **M = Moderate Risk**
- **L = Low Risk**

Job Steps	Hazards	Controls	RAC
Sonic Drilling Operation (Preliminary Work)	Uninformed Workers Performing Tasks	• Prior to sonic drilling operations, **ALL** personnel assigned to this drilling operation will attend a site-specific meeting. • This meeting will also cover the voice and hand signals associated with this type of activity. • Before sonic drilling is started ensure that everyone who operates the rig has had adequate training and is thoroughly familiar with the sonic rig, its controls, capabilities and operating manual. • Minimum PPE requirement is Level D (See page 6 of 6, under Equipment to be Used) • Ensure that rig and all associated equipment are inspected by a competent person and that the rig is in safe operating condition per EM 385-1-1. • Tag and remove from service faulty or unsafe equipment.	**M**

9—AHA—Well Installation and Development Using Sonic Drilling Operations

Job Steps	Hazards	Controls	RAC
Sonic Drilling Operation (Preliminary Work) (continued)	Contacting Underground/Overhead Utilities	• Scan, mark, and locate all utilities around the site before work commences. • Obtain and review all pertinent utility drawings. • Ensure that markings are done according to the APWA Standards. • Ensure that marks, flagging, or otherwise posted as utility markings are not covered, illegible, or lost. • Cease work immediately if unknown utility markers are uncovered. • Hand auger the first 5-feet of each boring. • Use manual excavation within 3 feet of known utilities. • Utility clearance shall conform with 29 CFR 1926.955, including USA Notification. • Lower boom prior to moving rig, if applicable. • Beware of overhead obstructions and power lines that could cause danger to the operation.	**M**
Equipment Inspection, Walk-around	Slips, Trips, Fall	• Clear walkways, platforms, access steps and work areas of equipment, tools, and debris • Mark, identify, or barricade other obstructions • Work areas, platforms and walkways should be kept free of materials, debris, and obstructions such as ice, grease or oil that could cause a surface to become slick or otherwise hazardous. All guard rails to be in place. • Drill rods and implements shall be stowed and secured to prevent rolling and accidental dislodging.	**M**
Mobilization of Sonic Rig and Support Truck/ Set-Up Sonic Rig	Instability of Ground Surface	• Set-up on stable and level terrain. • Outriggers shall be extended per the manufacture's specifications. Do not place wheels, outriggers, or equipment support mechanism on underground structures, such as man holes, vaults, etc.	**M**

9—AHA—Well Installation and Development Using Sonic Drilling Operations

Job Steps	Hazards	Controls	RAC
Mobilization of Sonic Rig and Support Truck/ Set-Up Sonic Rig (continued)	Security—Unauthorized Personnel in Work Area	• Area of sonic drilling operation to be cordoned off. • Set up work zones. Exclusion Zone, Contamination Reduction zone and Support Zone.	**L**
Offloading Heavy Objects and Drums from Rig and Support Truck	Back and Muscle Strains, Cuts Lacerations, Abrasions, Pinch points, etc.	• Use proper lifting techniques • Obey sensible lifting limits (60 lb. Maximum per person manual lifting) • Use mechanical lifting equipment (hand carts, trucks, and drum dolly, forklift) to move large, awkward loads.	**M**
	Vehicle Traffic	• Use Spotter when backing • Survey route to work locations. Do not move rig to any work area until the site layout has been established and assessed for hazards. Inform crew of hazards.	**M**
	Hydraulic Hose Leakage	• Inspect daily before use and continually throughout the day for leaks and damage • Any damaged hose or connection must be replaced before unit is used. • Immediately shutdown equipment if lines rupture.	**L**
Forklift Operations	Unqualified operator	• Forklift operators will be trained.	**L**
Sonic Rig Operation (including casing and core barrels)	Hand and Foot Injury from Jaws and Clamps	• Stay clear! This area for pipes only. • Lock and tag out before any maintenance. • Avoid placing hands close to potentially hazardous equipment components.	**M**
	Emergencies	• Driller and helper must be present during all active operations and <u>TEST THE TWO KILL SWITCHES DURING EACH STARTUP</u> • Sonic rig helper and other site personnel must know location of the two emergency shutoff switches. • Area of drilling operation must be cordoned off/barricaded • When hazardous conditions are deemed present, operation must be shut down.	**M**

9—AHA—Well Installation and Development Using Sonic Drilling Operations

Job Steps	Hazards	Controls	RAC
Sonic Rig Operation (including casing and core barrels) (continued)	Inclement Weather	• Cease operations during electrical storms and high winds.	L
	Pinch Points, Nip Points, Struck By or Caught in Moving Parts	• Crewmembers shall not wear loose clothing, long hair, jewelry, or equipment that might become caught in moving machinery. Secure PPE close to the body to avoid getting caught in moving parts. • Unauthorized personnel must be kept clear of the sonic rig. • Shut down, lock and tag out rig to make repairs or adjustments to the sonic rig or to lubricate fittings. Release all pressure on the hydraulic systems, the drilling fluid system, and the air pressure systems of the drill rig prior to performing maintenance. • Identify and understand parts of equipment which may cause crushing, pinching, rotating or similar injuries • Neatly stack pipe, rods, and similar tools on racks or sills to prevent spreading, rolling or sliding • Wear proper work gloves when the possibility of pinching, or other injury may be caused by moving/ handling large or heavy objects • Maintain all equipment in a safe condition • Erect a barrier to guard workers from moving and rotating components. • Keep all guards in place during use • Ensure that operators verbally alert all workers before starting.	M
		• **Establish a system of responsibility for the operator and helpers to follow during the series of various activities**, such as connecting and disconnecting sections and inserting and removing the sections. • Wear leather work gloves	M

9—AHA—Well Installation and Development Using Sonic Drilling Operations

Job Steps	Hazards	Controls	RAC
Sonic Rig Operation (including casing and core barrels) (continued)	Struck By/Against Flying Particles and Objects, Protruding Objects	• **Never reach behind or around a rotating equipment for any reason** • Clean equipment only when the sonic rig is in neutral and the equipment has stopped • Wear hard hats, safety vest, safety glasses with side shields and steel-toe safety boots at all times. • Do not lean shovels, brooms, or tools against the side of the rig. • Do not place unsecured tools or loose items on the rig.	**M**
	High Noise Levels	• Use hearing protection if noise levels with an NRR of 85 dbA at least 20 within a minimum distance of 15 feet of the drill rig	**M**
	Fire/Explosion	• Test atmosphere with combustible gas meter • Post "NO SMOKING" signs • Store combustible materials away from flammables • Eliminate sources of ignition from the work area • Prohibit smoking in well drilling area • Provide ABC (or equivalent) fire extinguishers for all work and flammable storage areas, fuel powered generators and compressors • Store flammable liquids in well ventilated areas • Prohibit storage, transfer of flammable liquids in plastic containers • Store all compressed gas cylinders upright, caps in place when not in use • Separate flammables and oxidizers by 20 feet minimum	**L**
	Inhalation and Contact with Hazardous Substances, Liquid Splash	• Provide workers proper skin, eye and respiratory protection based on the exposure hazards present. Per the SHSP. • Review hazardous properties of site contaminants (SSHP Section 2) with workers before sampling operations begin • Monitor breathing zone air to determine levels of contaminants per SHSP • Wear splash shields and safety goggles when sampling, cleaning, decontaminating test equipment	**L**

9—AHA—Well Installation and Development Using Sonic Drilling Operations

Job Steps	Hazards	Controls	RAC
Sonic Rig Operation (including casing and core barrels) (continued)	Biological Hazards (including snakes, insects, spiders, and poisonous plants)	• Inspect areas for hazards • Avoid placing hands or feet into concealed areas. • Check for insects, spiders and snakes	**L**
	Handling Heavy Objects	• Observe proper lifting techniques • Obey sensible lifting limits (60 lb. maximum per person manual lifting) • Use mechanical lifting equipment (hand carts, drum dolly, forklift, trucks) to move drums and large, unbalanced, or awkward loads	**M**
	Sharp Objects	• Wear cut resistant work gloves when the possibility of lacerations or other injury may be caused by sharp edges or objects • Maintain all tools in a safe condition. Use the correct tool for the activity. • Keep guards in place during use • Use abrasion resistant gloves	**M**
	High Temperature	• Monitor for heat stress in accordance with APP. • Provide fluids to prevent worker dehydration • Insulated Clothing (subject to ambient temperature)	**L**
	Pinch Points (including during drum handling)	• Wear proper work gloves when the possibility of pinching, or other injury may be caused by moving/ handling large or heavy objects. • Use safe drum dolly handling techniques. Refer to Drum and Cylinder Handling AHA. • Always check drum rings to insure they are tight before moving drums. • Neatly stack pipe, rods, and similar tools on racks or sills to prevent spreading, rolling or sliding • Use appropriate tools such as pipe wrenches , drum wrench and vise grips	**M**

9—AHA—Well Installation and Development Using Sonic Drilling Operations

Job Steps	Hazards	Controls	RAC
Sonic Rig Operation (including casing and core barrels) (continued)	Slips, Trips, Falls	• Clear walkways, Platforms ,Access stairs and work areas of equipment, vegetation, excavated material, tools, and debris • Mark, identify, or barricade other obstructions • Work areas, platforms and walkways should be kept free of materials, debris, and obstructions such as ice, grease or oil that could cause a surface to become slick or otherwise hazardous. All guard rails to be in place. • Use hand holds and steps on the equipment. • Keep hand holds and steps clean. • Cover all open boreholes if left unattended.	**L**
	Hand and Foot Injury from Jaws and Clamps	• Stay clear! This area for pipes only. • Lock and tag out before any maintenance.	**M**
Handling Heavy Objects (including drums)	Back strains, Muscle strains, Cuts, Lacerations, Abrasions, Pinch points, etc.	• Survey exit route and inform crew of any hazards. • Use proper lifting techniques • Obey sensible lifting limits (50 lb. maximum per person manually lifting) • Wear cut and abrasion resistant gloves • Use mechanical lifting equipment (hand carts, drum dolly, forklift, or trucks) to move drums and large, unbalanced, or awkward loads.	**M**
Forklift Operations	Unqualified operator	• Forklift operators will be trained.	**L**
	Operational Failures	• Perform equipment initial and daily safety inspection checklist to ensure equipment is safe for use. • Operator's manual shall be available. • Operator shall be trained and have a current certification. • Operator shall not use headphones, cell phones, music, ipods, or any other electronic devices while operating equipment. • Do not exceed load limits of the equipment. • Never override safety devices • Employees working on ground must be in constant visual contact with operators.	**M**

9—AHA—Well Installation and Development Using Sonic Drilling Operations

Job Steps	Hazards	Controls	RAC
Forklift Operations (continued)	Operational Failures	• Never use forks as an elevator or work platform unless specifically equipped and SSHO has approved.	
	Impacts	• Perform pre-positioning familiarization of area for uneven or soft ground, overhead utilities &/or obstacles, blind spots and tight quarters. • Ensure that driver\operator is familiar with routes and base traffic patterns. • Use a spotter. • Establish work zone. • Never stand by or pass under an elevated load. • Unattended equipment shall have load engagement means lowered, controls neutralized, power off & brakes set. • All workers shall wear highly visible safety vest.	**M**
	Dropping loads	• Spread forks apart *as* for as possible and check the stability of all loads before moving. • Strap unstable loads. • Lower forks to the lowest point possible before transporting a load.	**M**
	Slip, Trip, Fall	• Use hand & foot holds and steps when getting on and off. • Keep hand, foot holds and step clean and free of dirt, mud, etc. • Ensure that soles of safety shoes have good traction.	**L**
Changed or Unanticipated Conditions	Safety or health hazards that may be derived from changed or unanticipated conditions	• Modify the AHA as often as necessary to address new or unanticipated hazards. Use ”Job Safety Analysis” form to facilitate field documentation	**L**

9—AHA—Well Installation and Development Using Sonic Drilling Operations

Equipment to be Used	Training Requirements/Competent or Qualified Personnel name(s)	Inspection Requirements
• Sonic rig and associated equipment • Level D personal protection: Hard hat, safety vest, safety boots, safety eyewear, long-sleeved shirts and pants. • Ear protection, abrasion resistant gloves • Photo ionization detector • Combustible gas indicator • Forklift	• Tailgate Safety Meeting • Site-specific orientation • Hazard Communication • HAZWOPER 40 hr. • HAZWOPER 8 hour refresher • 8 hr Supervisor training • Forklift training. • Worker must be trained in the safe application of task specific tools and materials • Sonic Rig Competent person • James Vigerust – CP/SSHO	• Conformance to applicable subsections of EM 385 1-1, Section 16M DRILLING EQUIPMENT. • Inspect daily before work starts. • Inspect and operate in accordance with the drill rig manufacturer's operation manual • A copy of the equipment manual will be available at the jobsite.

Table 5-1 Activity Hazard Analysis

Activity/Work Task: Injection of EVO and Amendments	Overall Risk Assessment Code (RAC)	**M**
Project Location: RSA-204 Redstone AL	**Risk Assessment Code (RAC) Matrix**	
Contract Number: W91ZLK-09-D-0006		
Date Prepared: July 2015		
Prepared by: James Vigerust/SSHO		
Reviewed by: Doug Russell/HSM		
Notes: (Field Notes, Review Comments, etc.).		

Severity	**Probability**				
	Frequent	Likely	Occasional	Seldom	Unlikely
Catastrophic	**E**	**E**	**H**	**H**	**M**
Critical	**E**	**H**	**H**	**M**	**L**
Marginal	**H**	**M**	**M**	**L**	**L**
Negligible	**M**	**L**	**L**	**L**	**L**

Step 1: Review each **"Hazard"** with identified safety **"Controls"** and determine RAC (See above)

"Probability" is the likelihood to cause an incident, near miss, or accident and identified as: Frequent, Likely, Occasional, Seldom or Unlikely.

"Severity" is the outcome/degree if an incident, near miss, or accident did occur and identified as: Catastrophic, Critical, Marginal, or Negligible

Step 2: Identify the RAC (Probability/Severity) as E, H, M, or L for each "Hazard" on AHA. Annotate the overall highest RAC at the top of AHA.

RAC Chart

- **E = Extremely High Risk**
- **H = High Risk**
- **M = Moderate Risk**
- **L = Low Risk**

Job Steps	Hazards	Controls	RAC
Operating Vehicles On-Site and En-Route	Collision; unsafe driving conditions	• Seatbelts must be worn when operating vehicles; defensive driving practices; conduct inspections; no cell phone or mobile device use when driving..	**L**
Establish Work areas and Exclusion Zones	Slips/trips/falls; traffic	• Plan routes around site; use spotter(s). • Clear walkways, work areas of equipment, tools, other debris • Mark, identify, or barricade other obstructions • Ensure that all water and slurry is kept vacuumed up. • Safety shoes shall be in good repair and provide good traction. • Place cords and hoses to provide safe access & unimpeded travel	**L**
Deploy and String Injection Hose with Injection Tooling	Slips/trips/falls; physical strain	• Designate and delineate work area; communicate slip-trip-fall hazard potential; use buddy system to push and pull hose.	**L**
Lay and Connect Water Supply Hose	Slips/trips/falls; physical strain; traffic; damage to property	• Use safe lifting practices; evaluate loads >50lbs or awkward shaped materials for buddy system; use appropriate tools for the job; use cross-over ramps where crossing pedestrian or vehicle easements.	**L**

14—AHA—Injection

Job Steps	Hazards	Controls	RAC
Advance Injection Tools to Target Depths	Pinch point; hand injury; projectiles; physical strain; hit by/struck by.	• Identify and avoid pinch points and cutting/drilling action areas; Level D PPE with safety glasses and cut-resistant (Level II) gloves; Use proper lifting techniques, two man handling of equipment when loading and unloading if in excess of 50 pounds and or awkwardly designed.; identify and delineate range of tool motion and create space necessary for safe work activities.	M
Initiate Injection	Splash; hit by/struck by; surface release of material; damage to equipment or property.	• Level D PPE with safety glasses and face shield if working around lines or connections pressurized >10 psi; whip checks at all connections; use spotters to monitor work area; communicate between injection operator and ground level personnel; identify and know where emergency shut-off switches are; have spill response measures accessible prior to initiating injection.	L
High Pressure	Rupture of delivery equipment	• Verify all delivery equipment i.e., hoses, couplings, injection rod, etc., are rated at least 2 times the anticipated delivery pressure. • Use gauges to monitor injection pressures and never exceed safety factor pressures.	M
Remove Injection Tools	Chemical exposure; physical injury; slips/trips/falls	• Use wiper gasket with DPT injection tools; Level D PPE with layered glove or cut resistant (Level II) chemical protective gloves; use care handling wet or slippery rods; ensure work space is adequate; plan route; contain and manage IDW.	L
Backfill Injection Points and Cleared Borings	Physical strain	• Use safe lifting practices.	L
Decontaminate Tools	Chemical exposure; splash; slips/trips/falls; physical injury	• Level D with splash resistant coverall (e.g. Tyvek); layered or cut resistant (Level II) chemical resistant gloves; face shield with safety glasses; plan movement; delineate work area.	L
Changed or Unanticipated Conditions	Safety or health hazards that may be derived from changed or unanticipated conditions	• Modify the AHA as often as necessary to address new or unanticipated hazards. Use ”Job Safety Analysis” form to facilitate field documentation .	L

14—AHA—Injection

Equipment to be Used	Training Requirements/Competent or Qualified Personnel name(s)	Inspection Requirements
• Direct push rig • Specialized injection rig with pumps, mixing tanks, manifolds, gauges and meters • Direct push injection tooling with inner-hose delivery system • Misc. hand tools • Hard hat, safety boots, eye protection, long-sleeved shirts and pants, abrasion-resistant gloves	• Tailgate safety meeting • HAZWOPER 40-hour • HAZWOPER 8-hour refresher • James Vigerust – CP/SSHO	• Daily rig inspection prior to use. Look for proper high pressure line fittings and whip-checks; attend to high pressure lines. Monitor for hydraulic line leaks. • Use clean, maintained tools for the job they were designed for. • Inspect all equipment and tools prior to use.

Table 5-1 Activity Hazard Analysis

Activity/Work Task: Substrate Handling	Overall Risk Assessment Code (RAC)	L
Project Location: RSA-204 Redstone AL	**Risk Assessment Code (RAC) Matrix**	
Contract Number: W91ZLK-09-D-0006		
Date Prepared: July 2015		
Prepared by: James Vigerust/SSHO		
Reviewed by: Doug Russell/HSM		
Notes: (Field Notes, Review Comments, etc.).		

Severity	Probability				
	Frequent	Likely	Occasional	Seldom	Unlikely
Catastrophic	E	E	H	H	M
Critical	E	H	H	M	L
Marginal	H	M	M	L	L
Negligible	M	L	L	L	L

Step 1: Review each **"Hazard"** with identified safety **"Controls"** and determine RAC (See above)

"Probability" is the likelihood to cause an incident, near miss, or accident and identified as: Frequent, Likely, Occasional, Seldom or Unlikely.

"Severity" is the outcome/degree if an incident, near miss, or accident did occur and identified as: Catastrophic, Critical, Marginal, or Negligible

Step 2: Identify the RAC (Probability/Severity) as E, H, M, or L for each "Hazard" on AHA. Annotate the overall highest RAC at the top of AHA.

RAC Chart

- **E = Extremely High Risk**
- **H = High Risk**
- **M = Moderate Risk**
- **L = Low Risk**

Job Steps	Hazards	Controls	RAC
Establish Work Areas and Substrate Storage Area for Totes/Tanks	Slips/trips/falls; traffic	• Level D PPE with High Visibility/Reflective Vest; plan routes around site; use spotter(s). Use material handler to move totes. Clear walkways, work areas of equipment, tools, other debris • Mark, identify, or barricade other obstructions • Ensure that all water and slurry is kept vacuumed up. • Safety shoes shall be in good repair and provide good traction. • Place cords and hoses to provide safe access & unimpeded travel	L
Move Totes of ELS®, EHC® and/or Designated Substrate	Slips/trips/falls; physical strain; damage to property; release of material.	• Plan route and inspect for debris and other hazards; communicate and use spotter; use appropriate equipment (pallet jack for totes); Buddy system for empty totes or pallet jack; use safe lifting, pushing or pulling techniques; do not store in areas of vehicular traffic.	L
Moving/Handling Biological Culture Canisters	Slips/trips/falls; physical strain; damage to equipment	• Plan route; use buddy system if canister and/cooler weigh >50 lbs; Level D PPE with cut-resistant (Level II) gloves.	L

13—AHA—Substrate Handling

Job Steps	Hazards	Controls	RAC
Mixing Substrates	Splash; slips/trips/falls; release	• Level D PPE with safety glasses; clean up incidental spills as material is slippery; purge lines prior to removal; use engineered controls (lids and barriers) on blending tanks.	L
Working with DHC Canisters	Splash	• Contents under low pressure ~10 psi; ensure fittings and lines secure and without obstructions before opening valves; Level D PPE with safety glasses.	L
Changed or Unanticipated Conditions	Safety or health hazards that may be derived from changed or unanticipated conditions	• Modify the AHA as often as necessary to address new or unanticipated hazards. Use ”Job Safety Analysis” form to facilitate field documentation	L
Substrate containment	Spill	• Ensure adequate spill containment is established.	L
	Confined space	• If using tanks for substrate containment verify adequate means for side entry is provided for subsequent tank cleaning.	L
	Falls	• When selecting tanks for containment verify tanks are equipped with adequate stairways consisting of top and mid rail to access elevations 6 feet of greater. If work on top of tanks in excess of 6 feet is necessary procure tanks with appropriate hand rails for fall protection.	L

Equipment to be Used	Training Requirements/Competent or Qualified Personnel name(s)	Inspection Requirements
• Pallet Jack • Misc. hand tools • Hard hat, safety boots, eye protection, long-sleeved shirts and pants, abrasion-resistant gloves	• Tailgate safety meeting • HAZWOPER 40-hour • HAZWOPER 8-hour refresher • James Vigerust – CP/SSHO	• Inspect route to be traveled for debris, cracks in pavement or other hazards. • Use clean, maintained tools for the job they were designed for. • Inspect non-construction equipment and power tools per manufacturer requirements.

Table 5-1 Activity Hazard Analysis

Activity/Work Task: Direct-Push Technology, Substrate Injection	Overall Risk Assessment Code (RAC)	**M**
Project Location: RSA-204 Redstone AL	**Risk Assessment Code (RAC) Matrix**	
Contract Number: W91ZLK-09-D-0006		
Date Prepared: July 2015		
Prepared by: James Vigerust/SSHO		
Reviewed by: Doug Russell/HSM		

Severity	**Probability**				
	Frequent	Likely	Occasional	Seldom	Unlikely
Catastrophic	**E**	**E**	**H**	**H**	**M**
Critical	**E**	**H**	**H**	**M**	**L**
Marginal	**H**	**M**	**M**	**L**	**L**
Negligible	**M**	**L**	**L**	**L**	**L**

Notes: (Field Notes, Review Comments, etc.)

Step 1: Review each **"Hazard"** with identified safety **"Controls"** and determine RAC (See above)

"Probability" is the likelihood to cause an incident, near miss, or accident and identified as: Frequent, Likely, Occasional, Seldom or Unlikely.

"Severity" is the outcome/degree if an incident, near miss, or accident did occur and identified as: Catastrophic, Critical, Marginal, or Negligible

Step 2: Identify the RAC (Probability/Severity) as E, H, M, or L for each "Hazard" on AHA. Annotate the overall highest RAC at the top of AHA.

RAC Chart
E = Extremely High Risk
H = High Risk
M = Moderate Risk
L = Low Risk

Job Steps	Hazards	Controls	RAC
Equipment Setup	Vehicle traffic	• Use spotter when backing.	**NA**
	Handling heavy objects	• Use proper lifting techniques. • Obey sensible lifting limits (50 pounds maximum per person manual lifting). • Use mechanical lifting equipment (hand carts, trucks) to move large, awkward loads.	**L**
	Instability of ground surface	• Set-up on stable and level terrain.	**M**
	Security – unauthorized personnel in work area	• Area of DPT operation to be cordoned off.	**L**

12—AHA—DPT Substrate Injection

Job Steps	Hazards	Controls	RAC
Equipment Setup (continued)	Contact with overhead utilities	• Check work areas for overhead lines and obstruction (trees, structures, etc.). • Required overhead clearances from power lines: <u>Nominal System Voltage Minimum Required Clearance</u> up to - 50 kV 10 feet (3m) 51 - 200 kV 15feet (4.6m) 201 - 350 kV 20feet (6m) 351 - 500 kV 25 feet (7.6m) 501 - 650 kV 30 feet (9.1m) 651 - 800kV 35 feet (10.7m) 801 - 950 kV 40 feet (12.2m) 951 - 1100 kV 45 feet (13.7m	**M**
	Slips, trips, falls	• Clear walkways and work areas of equipment, tools, and debris. • Mark, identify, or barricade other obstructions. • Work areas and walkways should be kept free of materials, debris, and obstructions such as ice, grease, or oil that could cause a surface to become slick or otherwise hazardous.	**L**
	Contact with underground utilities	• Scan, mark, and locate all utilities around the site before work commences and identify on a site layout plan • Verify underground clearance by hand augering to 5 feet	**M**
	Uninformed workers performing tasks	• Before DPT sampling is started ensure that everyone who operates the rig has had adequate training and is thoroughly familiar with the DPT rig, its controls, capabilities, and operating manual. • Prior to DPT operations, **<u>ALL</u>** personnel assigned to this drilling operation will attend a tailgate meeting. • This meeting will also cover the voice and hand signals associated with this type of activity. • <u>Ensure that every site worker is informed of safe operating practices around the rig.</u> • <u>Ensure that every employee understands this AHA and the applicable subsections of EM 385-1-1, section 16m, “drilling equipment.”</u>	**L**

12—AHA—DPT Substrate Injection

Job Steps	Hazards	Controls	RAC
Direct-Push Technology (DPT) Operation	Pinch points, nip points, struck by, or caught in moving parts	• Crewmembers shall not wear loose clothing, long hair, jewelry, or equipment that might become caught in moving machinery. Secure PPE close to the body to avoid getting caught in moving parts. • Unauthorized personnel must be kept clear of the DPT rig. • Shut down, lock and tag out rig to make repairs or adjustments to the DPT rig or to lubricate fittings. Release all pressure on the hydraulic systems, the drilling fluid system, and the air pressure systems of the drill rig prior to performing maintenance. • Identify and understand parts of equipment which may cause crushing, pinching, rotating, or similar injuries. • Neatly stack pipe, rods, and similar tools on racks or sills to prevent spreading, rolling or sliding. • Wear abrasion resistant work gloves when moving/ handling large or heavy objects. • Maintain all equipment in a safe condition. • Keep all guards in place during use. • **Establish a system of responsibility for the operator and helpers to follow during the series of various activities**, such as connecting and disconnecting sections and inserting and removing the sections. • Clean Equipment only when the DPT rig is in neutral and the equipment has stopped.	**M**
	Emergencies	• Driller and helper must be present during all active operations and TEST THE TWO KILL SWITCHES DURING EACH STARTUP. • DPT rig helper and other site personnel must know location of the two emergency shutoff switches. • Area of drilling operation must be cordoned off/barricaded. • When hazardous conditions are deemed present, operation must be shut down.	**L**
	High noise levels	• Use hearing protection if noise levels exceed 85 decibels, A-scale.	**M**
	Exposure to site contaminants	• Review hazardous properties of site contaminants with workers before operations begin • Monitor breathing zone air to determine levels of contaminants with photoionization detector	**L**

12—AHA—DPT Substrate Injection

Job Steps	Hazards	Controls	RAC
DPT Operation (continued)	Exposure to site contaminants (continued)	• Use mechanical ventilation such as portable blowers and generator, to control vapors if indicated by air monitoring • Follow proper decontamination procedures to prevent ingestion of contaminants	L
Injecting Substrate	Chemical splash; fluids under pressure	• Ensure tight fittings in injection system • Wear eye protection near pressurized systems including chemical splash goggles or face shield where splash is a potential hazard • Train workers on the hazards associated with process chemicals. Applicable Material Safety Data Sheets will be onsite and reviewed by all employees working with chemicals.	L
High Pressure	Rupture of delivery equipment	• Verify all delivery equipment i.e., hoses, couplings, injection rod, etc., are rated at least 2 times the anticipated delivery pressure. • Use gauges to monitor injection pressures and never exceed safety factor pressures.	M
Changed or Unanticipated Conditions	Safety or health hazards that may be derived from changed or unanticipated conditions	• Modify the AHA as often as necessary to address new or unanticipated hazards. Use ”Job Safety Analysis” form to facilitate field documentation.	NA

Equipment to be Used	Training Requirements/Competent or Qualified Personnel name(s)	Inspection Requirements
• DPT rig and associated equipment • Level D personal protection: Hard hat, safety vest, safety boots, Safety eyewear, long-sleeved shirts and pants. , ear protection, abrasion resistant gloves	• Tailgate Safety Meeting • Site-specific orientation • Hazard Communication • HAZWOPER 40-hour • HAZWOPER 8-hour refresher • Worker must be trained in the safe application of task specific tools and materials • Drillers will comply with EM 385 1-1, Section 18H Drilling Equipment • James Vigerust – CP/SSHO	• Inspect at least daily. • Inspect and operate in accordance with the drill rig manufacturer’s operation manual. A copy of the manual will be available at the jobsite. • Inspect non-construction equipment and power tools per manufacturer requirements.

Table 5-1 Activity Hazard Analysis

Activity/Work Task: Soil and Sediment Sampling	Overall Risk Assessment Code (RAC) (Use highest code) **M**
Project Location: RSA-204 Redstone AL	**Risk Assessment Code (RAC) Matrix**
Contract Number: W91ZLK-09-D-0006	
Date Prepared: 03/30/2015	
Prepared by (Name/Title): James Vigerust Health and Safety	
Reviewed by (Name/Title): Doug Russell/HSM	
Notes: (Field Notes, Review Comments, etc.)	

Severity	Probability: Frequent	Likely	Occasional	Seldom	Unlikely
Catastrophic	E	E	H	H	M
Critical	E	H	H	M	L
Marginal	H	M	M	L	L
Negligible	M	L	L	L	L

Step 1: Review each **"Hazard"** with identified safety **"Controls"** and determine RAC (See above)

"Probability" is the likelihood to cause an incident, near miss, or accident and identified as: Frequent, Likely, Occasional, Seldom, or Unlikely.

"Severity" is the outcome/degree if an incident, near miss, or accident did occur and identified as: Catastrophic, Critical, Marginal, or Negligible

Step 2: Identify the RAC (Probability/Severity) as E, H, M, or L for each "Hazard" on AHA. Annotate the overall highest RAC at the top of AHA.

RAC Chart

- **E = Extremely High Risk**
- **H = High Risk**
- **M = Moderate Risk**
- **L = Low Risk**

Job Steps	Hazards	Controls	EM 385-1-1	RAC
Obtain soil and sediment samples.	Failure to properly plan daily activities.	• Complete a Job Safety Analysis (JSA) for each task, as specified in Shaw Environmental & Infrastructure, Inc. Procedure No. HS045, "Job Safety Analysis (JSA)." Use Hazard Assessment Resolution Program frequently – for each task to be completed.	01.A.09	**M**
	Hand injuries.	• Items to be handled shall be inspected for sharp edges prior to being handled. Personnel shall wear leather gloves when handling sharp materials. Personnel shall be aware of and avoid pinch point hazards.	05.A.08	**L**
	Noise.	• Equipment operators and ground personnel working near heavy equipment shall wear hearing protection to reduce exposures to below the Occupational Safety and Health Administration limits.	05.C	**L**
	Chemical contamination.	• Follow procedures in Safety and Health Plan (SSHP). Wear disposable glove, at a minimum. Boot covers and disposable coverall may be necessary.	05.A	**L**
	Struck by equipment.	• Ground personnel, working near heavy equipment, shall wear American National Standards Institute Class 2 high-visibility conspicuity vests. Ground personnel shall not enter the swing radius of excavators and stay clear of other equipment.	05.F	**M**

Job Steps	Hazards	Controls	EM 385-1-1	RAC
Obtain soil and sediment samples (continued).	Heavy lifting, strains, and sprains.	• No individual employee is permitted to lift any object that weighs over 50 pounds. Proper lifting techniques shall be used. Multiple employees or the use of mechanical lifting devices are required for lifting objects over the 50-pound limit. Do not over-load coolers.	14.A.01	**M**
	Insect bites/West Nile virus.	• Wear PPE and tape joints to keep insects away from the skin. Use protective insect repellents containing N,N-diethyl-m-toluamide, such as, 3M Ultrathon or equivalent and clothing insecticide preparations containing permethrins (Repel Permanone or equivalent) to prevent insect bites. Check limbs/body for insects/insect bites before showering. Notify Site Safety and Health Officer (SSHO) of flu-like symptoms.	06.D.01	**L**
	Contact dermatitis and poison ivy.	• Check around work areas to identify if poison ivy is present. Wear long-sleeve shirts/trousers or Tyvek® coveralls to avoid skin contact with plants or other skin irritants. Learn to identify poisonous plants. • Cover vegetation with plastic (visqueen) where sampling position raises exposure potential. Apply protective cream/lotion to exposed skin to prevent poison ivy or similar reactions. Identify workers who are known to contract poison ivy.	06.D.03	**L**
	Slips, trips, and falls.	• Keep work areas clear and maintain housekeeping. Personnel shall not jump from elevated surfaces. Personnel shall use caution when walking on rocky, slippery, or uneven terrain.	14.C.01-10	**M**
	Fire.	• Fire extinguishers shall be available in work areas. Smoking shall only be allowed in designated areas.	09.E.01	**L**
	Use of sampling tools.	• All sampling tools shall be constructed of non-sparking materials. Hand tools shall be inspected daily and before each use. Tools, which are damaged, shall be removed from service. Personnel shall work in a manner and pace to reduce strains and overexertion.	13.A.02	**L**
	Heat stress and cold stress.	• Follow procedures outlined in the SSHP.	06.I	**M**
	Severe weather.	• The SSHO will monitor weather conditions each day in order to plan and prepare for hazardous conditions. The SSHO will identify a suitable tornado shelter at each work location. Work activities will be suspended prior to weather conditions becoming hazardous so that workers have ample time to seek shelter. Upon seeing lightning or hearing thunder, outdoor activities shall be suspended and personnel shall be evacuated to safe areas (inside vehicles, buildings, or tornado shelters as appropriate). Follow procedures outlined in the Accident Prevention Plan.	06.I	**L**

Equipment to be Used	Training Requirements/Competent or Qualified Personnel name(s)	Inspection Requirements
Personal Protective Equipment - Level D - Modified: Hard hat Safety glasses Safety-toed boots Work gloves ANSI Class 2 reflective warning vests Disposable gloves (nitrile) Disposable boot covers Equipment: Magnetometers Fire extinguishers Emergency eyewash First aid kit Deep-Woods Off or Ultrathon Repel Permanone Drinking water Weather radio or AM/FM radio Non-sparking sampling tools	Competent Person (CP) / Qualified Person (QP): James Vigerust – CP/SSHO James Vigerust – QP/First Aid and CPR Training Requirements: Site safety orientation HAZWOPER 40-Hour MEC Awareness Lifting/back safety Fire extinguisher use Emergency procedures Biological hazard identification and control Tornado shelter locations National Lightning Safety Institute Lightning Safety procedures	Daily site safety inspection (SSHO) – James Vigerust Daily site safety inspection (QCO) – Housekeeping (daily) Fire extinguisher (weekly) Vehicle inspection daily Underground utilities Equipment and tools inspection daily and before use Survey areas for poisonous plants, insects, and animals Check body for ticks Verify tornado shelter available Monitor approaching storms

Table 5-1 Activity Hazard Analysis

Activity/Work Task: Rigging and Lifting	Overall Risk Assessment Code (RAC) (Use highest code)	**M**
Project Location: RSA-204 Redstone Arsenal	**Risk Assessment Code (RAC) Matrix**	
Contract/Project Number: W91ZLK-09-D-0006		
Date Prepared: 3/31/2015		
Prepared by (Name/Title):James Vigerust/SSHO		
Reviewed by (Name/Title): Doug Russell/HSM		

Severity	**Probability**				
	Frequent	Likely	Occasional	Seldom	Unlikely
Catastrophic	**E**	**E**	**H**	**H**	**M**
Critical	**E**	**H**	**H**	**M**	**L**
Marginal	**H**	**M**	**M**	**L**	**L**
Negligible	**M**	**L**	**L**	**L**	**L**

Notes: (Field Notes, Review Comments, etc.)
This AHA serves as certification of hazard assessment.

Step 1: Review each **"Hazard"** with identified safety **"Controls"** and determine RAC (See above)

"Probability" is the likelihood to cause an incident, near miss, or accident and identified as: Frequent, Likely, Occasional, Seldom, or Unlikely.

"Severity" is the outcome/degree if an incident, near miss, or accident did occur and identified as: Catastrophic, Critical, Marginal, or Negligible

Step 2: Identify the RAC (Probability/Severity) as E, H, M, or L for each "Hazard" on AHA. Annotate the overall highest RAC at the top of AHA.

RAC Chart

- **E = Extremely High Risk**
- **H = High Risk**
- **M = Moderate Risk**
- **L = Low Risk**

Job Steps	Hazards	Controls	RAC
Rigging and lifting with hydraulic equipment Rigging Competent Person:	Newly hired personnel and visitors. Unfamiliarity with: site, general (chemical, physical, environmental) site hazards, project safety rules and hazard control procedures, chain of command, and emergency procedures.	All personnel shall attend a site safety orientation. After personnel are trained in the contents of the Accident Prevention Plan (APP) and the Site Safety and Health Plan (SSHP), they shall sign the APP Acknowledgment Form and the SSHP Acknowledgment Form. Review emergency procedures and evacuation plans.	**M**
	Unqualified operator(s).	Verify operator is qualified and authorized for the equipment being used. Only personnel authorized by employer shall operate equipment.	**M**
	Failure to properly plan daily activities.	A Job Safety Analysis (JSA) shall be prepared by the crew prior to commencing daily activities. The JSA shall be used as a component of the morning Tailgate Safety Meeting. The JSA shall be revised at any time throughout the workday when new tasks are initiated, unforeseen circumstances arise, or if working conditions change. Personnel shall implement Hazard Assessment Resolution Process and Safety Step Back.Personnel to conduct focused and leading indicator "I CARE" observations.	**M**

Job Steps	Hazards	Controls	RAC
See job steps above.	Complacency.	All personnel shall attend the morning safety meetings to re-focus themselves to hazards, emergency procedures and equipment, operational aspects, and change(s) in site/work conditions. Recommended control measures for the hazards shall be part of the discussion.	**M**
	Fire.	Fire extinguishers shall be available in work areas. A 4-A:60-B:C fire extinguisher shall be available when refueling at the project site. Excavators shall be equipped with a 10-B:C fire extinguisher. The SSHO shall establish smoking areas. Smoke only in designated areas. Only discard cigarette butts in proper receptacles – never discard cigarette butts onto the ground. Smoking shall not be permitted within 50 feet of fueling operations. Use caution with vehicle exhaust systems in grassy areas. Do not run vehicles or equipment while parked in dry, grassy areas. Engines shall be shut off and allowed to cool before refueling. Follow AHA for "Fueling Operations."	**M**
	Unsafe equipment.	Before excavating Lifting equipment is placed in use at the project, it shall be inspected and tested in accordance with the manufacturer's recommendations and shall be certified in writing by a competent person to meet the manufacturer's recommendations. Subsequent re-inspections will be conducted at least annually thereafter. These inspections shall be documented on a Checklist for Construction Equipment. All safety deficiencies noted during the inspection shall be corrected prior to the equipment being placed in service at the project. All excavating equipment shall be inspected by the operator prior to use on the project and shall then be inspected on a daily basis.Deficiencies in equipment shall be noted on the inspection form. Do not use equipment that is not in proper operating condition. Attach a "Danger – Do Not Use" tag to inoperable equipment, remove key from equipment, and give key to the supervisor when notifying him/her of the inoperable equipment.. All rigging equipment is to be inspected before each use and condition documented Verify all manufacturers' safety guards, features, controls, back-up alarms, horns, and equipment are functioning properly and as intended by the manufacturer. Install and maintain equipment attachments and their operating systems according to manufacturer's specifications. Make frequent visual inspections of quick-disconnect systems (systems for connecting attachments to excavators) especially after changing attachments. Verify controls are properly labeles as to equipment function.	**M**

Job Steps	Hazards	Controls	RAC
See job steps above.	Overhead/aboveground hazards and utilities.	Overhead and aboveground hazards shall be evaluated prior to moving equipment on the project site. Complete a Site Layout Plan prior to mobilizing the equipment. The plan shall identify all overhead and aboveground hazards in the active work area(s) and travel routes - include utilities, pipe racks, structures, restricted areas, pedestrian routes, and equipment/vehicle traffic. Power lines shall be assumed to be energized unless verified to be de-energized and visibly grounded. Operation beneath a power line that has not been verified as de-energized and grounded must maintain clearance distances stated below. Nominal System Voltage — Minimum Required Clearance Distance Up to 50 kV — 10 feet (3 m) Over 50 - 200 kV — 15 feet (4.6 m) Over 200 - 350 kV — 20 feet (6 m) Over 350 - 500 kV — 25 feet (7.6 m) Over 500 – 750 kV — 35 feet (10.7 m) Over 750 – 1,000 kV — 45 feet (13.7 m) For over 1,000 kV, the minimum required clearance distance will be established by the utility owner/operator or professional engineer who is a qualified person with respect to electrical power transmission and distribution. Identify and provide temporary visual barriers that help prevent encroachment with the lines. In areas where it is not feasible to use barricades, spotters shall be provided; however, the minimum clearance distances from electrical lines must be observed. Each work crew member shall be trained in the electrocution hazards and emergency procedures associated with contacting energized power lines. Post overhead hazard warning signs as necessary.	**M**

Job Steps	Hazards	Controls	RAC
See job steps above.	Underground utilities and other underground hazards.	Follow any additional procedures for intrusive activities identified in APP and Work Plan prior to commencing intrusive activities. Utilities shall be located and marked prior to commencing intrusive activities. Contact utility one-call service (811) at least 48 hour but not more than 10 days prior to commencing intrusive activities, excluding weekends or any state or federal holidays. Retain a copy of mark-out ticket for documentation purposes and QC purposes. Evaluate the work areas, ground conditions, and travel paths to identify any sensitive underground structures, unstable areas, dangerous slopes, and existing open excavations. Complete a Site Layout Plan prior to mobilizing the equipment. The plan shall identify all underground utilities and other underground hazards in the active work areas and travel routes. Cease work immediately if unknown utilities or utility markers are uncovered. Use manual excavation within 3 feet of known utilities. Each work crew member shall be trained in electrocution hazards, explosion/fire hazards, and emergency procedures associated with contacting energized power lines and pipelines. Immediately contact Public Works Department in event utilities are encountered that were not previously marked. Notify Public Works in event any damage to utilities occur.	**M**
	Hand injuries.	Personnel shall wear appropriate leather, heavy cotton or synthetic gloves when handling materials with sharp edges, splinters, burrs, rough surfaces, etc. Items to be handled shall be inspected for sharp edges, splinters, burrs, rough surfaces, etc. prior to being handled. Personnel shall be aware of and avoid pinch point hazards.	**M**
	Noise.	All personnel shall wear hearing protection when operating noisy equipment. Personnel working in vicinity of noisy equipment shall wear hearing protection. Verify personnel noise exposures are safe by performing noise dosimetry.	**L**

Job Steps	Hazards	Controls	RAC
See job steps above Rigging Competent Person.	Use of excavators and backhoes.for rigging and lifting operations	Only qualified personnel shall be permitted to operate equipment. Lifting with hydraulic construction equipment shall comply with the requirements of EM 385-1-1, Section 16.N. Determine weight of object to be lifted; never lift any object if weight is unknown. Calculate lift/load capacities using manuals and load capacity charts. Lift supervisor will complete a Lift Plan Worksheet (Hydraulic Equipment) and hold pre-lift meeting prior to attempting lift-determine if the lift is a critical lift. Assign operator, rigger, tagline, and signal man responsibilities as necessary. Review lift hand signals with operator, signaler, supervisor, and workers. Select appropriate rigging equipment for the type of lift. Review rigging techniques, position of load, tag lines with workers involved in rigging activities. Perform required daily inspections, of wire ropes, sheaves, drums, rigging hardware, and attachments. Rigging shall be inspected before each use. Inspect rigging devices to verify slings, straps or free from defects and rated for the lift weight. Deficiencies shall be noted on the inspection form. Rigging found to be unsafe shall not be used, tagged, and taken out of service. Prohibit use of rigging equipment with missing documentation tags. Verify inspection and maintenance information for hydraulic equipment. Perform daily inspection of mechanical, hydraulic operations of equipment. Establish and isolate swing radius of equipment, rigging and load. Inspect for stability of surfaces beneath the hydraulic excavating equipment. All personnel shall be kept clear when material is being hoisted Hoisting of materials shall be done by use of a shackle that will prevent accidental disengagement. Taglines shall be used for controlling unguided materials. An operational test of equipment and rigging will be conducted in presence of GDA to verify performance It is the responsibility of the operator to read and understand the manufacturer's operator manual, the manufacturer's recommendations for each type and model of equipment to be operated, and the requirements of CB&I CMS-710-02-PR-	**M**

Job Steps	Hazards	Controls	RAC
		05700 prior to operating equipment. Operators must know the capacity and operating characteristics of the equipment to be operated. When mounting or dismounting equipment, clean shoes and hands before climbing. Always use handrails, grab rails, and steps. Maintain a three-point contact/control with steps and handholds. Never jump on or off equipment. Never attempt to mount or dismount a moving machine. Do not use steering wheel or control levers as a handhold. Lower the boom (and loader when equipped) to a safe position with the bucket/attachment on the ground and turn off the excavator before dismounting equipment. The equipment must be attended at all times or attachments must be placed in the “transport lock position” or lowered to the ground. The operator is responsible for keeping the windows clear and keeping cab clean at all times. Equipment operators must wear seat belt at all times and keep body (hands, arms, legs, head, etc.) inside the protected area of the cab. Operations are to be performed only from the operators control station. All equipment shall be operated at safe speeds and in a safe manner. If equipped with such, use the machine stabilizers. Loads must be carried as low as possible to maintain stability of the equipment and operator visibility. Do not operate equipment on grades steeper than those specified by the manufacturer. When operating on a sloped area, always move up or down the slope and not across the slope. Avoid making turns on inclines. If it is necessary, make turns wide and slowly with load carried low. When traveling up or down inclines, do so with loaded buckets facing uphill and empty buckets facing downhill. The operator of equipment shall not use cellular telephone devices or head/earphones for entertainment purposes while operating equipment. The use of cell phones and other communication devices are permitted for job-related communications or emergency situations, when the equipment is not operating.	

Job Steps	Hazards	Controls	RAC
See job steps above.	Use of excavators and backhoes (continued).	The operator shall not use attachments for which they were not designed to be used for, e.g., using a bucket to transport telephone poles. Follow the manufacturer's instructions for using positive locks on quick-disconnect equipment. Securely latch attachments such as quick-disconnect buckets before beginning work. Make frequent visual inspections of quick-disconnect systems — especially after changing attachments. The operator is to stay alert and focused at all times when the excavator or backhoe is in operation.	**M**
	Struck by and against	Wear PPE with high visibility vests when walking or working near moving equipment or vehicles. Prevent unauthorized workers or bystanders from entering work areas with equipment operations. Verify "**DANGER – STAY CLEAR"** (or equivalent) warning sign(s) is visibly posted on the equipment. Personnel shall maintain a safe distance from operations. Keep alert for movement of equipment, loads, excavations, piles, and ejected matter. Personnel shall not be permitted in the swing radius of the equipment. Precautions must be implemented to keep personnel out of excavations and at least 10 ft. (3 m) away from the equipment and its maximum boom and/or counterweight swing radius when operating. Accessible areas within the swing radius of the equipment are to be barricaded to prevent personnel from being struck or crushed, as appropriate. Do not approach an excavator or backhoe without first establishing communication with the operator or spotter (eye contact and then a signal to proceed after the equipment has been shut down: • Excavator bucket planted, powered down, and controls locked. • Backhoe bucket planted, engine shut off. Don't allow anyone to stand under a suspended load or the boom, arm, or bucket.	**M**

Job Steps	Hazards	Controls	RAC
		Operator to stop operations if personnel are observed within the swing radius.	
See job steps above.	Spotter operations.	Use designated spotters as necessary and as determined by the operator or supervisor. Establish communication before starting work – hand signals, whistles, radios, air horn, audible alarm, or other means of effective jobsite communication. When a designated spotter is used, the equipment shall not be moved unless the designated spotter giving signals is in full view of the operator. The spotter must maintain line of site or communication with the equipment operator. For movement of mobile equipment in congested areas, a designated spotter shall be in full view of the operator and shall direct the movement. In some cases, multiple spotters may be required.	**M**
	Sampling from bucket.	Position the sampling support and collection area on the cab side of the excavator to minimize operator blind spots created by the excavator boom assembly. Verify the operator is aware of your intention to collect samples from the bucket. Prior to sampling, the equipment operator shall fully lower the bucket to the ground, set the safety lockout lever to isolate joystick controls, decelerate the engine to idle level and signal the sample technician it is safe to approach the bucket. For backhoes, the bucket shall be planted on the ground and the engine shut down prior to approaching the bucket to obtain a sample. Keep out from between the excavator bucket and fixed objects, vehicles, or equipment when sampling. The operator should swing the machine to where the boom is at least at a 45-degree angle away from the excavation.	M
	Excavation hazards.	Follow the project Excavation/Trenching Plan.	**M**
	Dust or potential airborne hazards	Control dust by maintaining equipment operation rates. Control dust by applying water. Personnel shall stay out of dust and work from upwind when possible.	**M**

Job Steps	Hazards	Controls	RAC
See job steps above.	Slips, trips, and falls.	Understand the hazards of slips, trips, and falls – consider the consequences. Do not jump from equipment or elevated surfaces. Clean-up work areas throughout the day and at the end of each workday. Use three-point contact rule for entering/exiting vehicles, trucks, and equipment. Use hand rails and other stationary objects (door frames, door knobs, steering wheels, walls, etc.) to increase stability. Use extra caution when walking on wet, muddy, frosty, icy, or snow-covered surfaces. Consider postponing work as necessary and feasible. Increase your awareness, keep alert, stay focused, and know your environment. Stay away from slopes, hills, and grades. Be cautious when using stairs. Remove snow and ice when possible (shoveling, chipping, and salt application). Apply traction aids, such as sand, gravels, and straw. Lower your center of gravity when necessary. Slow down - take smaller steps.	**M**
	Insect bites and stings.	Review injury and illness potential with workers. Inspect work areas for bee nests and activity prior to commencing work in that area. Wear PPE, such as disposable coveralls, to keep insects away from the skin. Expect to encounter insects when working in warm weather – especially at locations with vegetation present. Use protective insect repellents containing DEET (Deep Woods Off or equivalent) to prevent insect bites, unless individual allergies and sensitivities prevent its use. Consider applying Permethrin (Repel Permanone or equivalent) preparations to clothing to repel ticks, chiggers, mosquitoes, and/or spiders. Check limbs/body for insects/ insect bites upon removing PPE and again during showering. Immediately notify supervisor or SSHO of insect bites, stings, irritations, rashes, or flu-like symptoms.	**L**

Job Steps	Hazards	Controls	RAC
See job steps above.	Contact dermatitis from poisonous and irritating plants (poison ivy, poison oak, and poison sumac).	Learn to identify poisonous and irritating plants. Check around work areas to identify if poisonous and irritating plants are present. Identify workers who are known especially sensitive to poisonous and irritating plants and plan work accordingly. Wear Tyvek® coveralls to avoid skin contact with irritating plants. Immediately notify the SSHO if you suspect you contacted an irritating plant. Avoid unnecessary clearing of plant/vegetation areas. Follow additional procedures outlined in the APP.	**L**
	Severe weather.	The SSHO to monitor weather conditions each day in order to plan and prepare for hazardous conditions. The SSHO to identify the nearest suitable storm shelter at each work location. Upon seeing lightning or hearing thunder, outdoor activities shall be suspended and personnel shall be evacuated to safe areas (inside vehicles, buildings, or tornado shelters as appropriate).	**M**
	Heat stress.	Allow several days for workers to acclimatize to elevated ambient temperatures. Monitor for heat stress and perform physiological monitoring in accordance with the requirements of the APP. Drink plenty of water when under heat stress conditions (~ 1 quart per hour). Provide for adequate electrolyte replacement. Personnel shall take required breaks to cool down as needed. Provide shade or shelter during rest periods.	**M**

Job Steps	Hazards	Controls	RAC
See job steps above.	Cold stress.	Workers should dress in layers in response to the conditions. Monitor for cold stress in accordance with the requirements of the APP. Drink warm beverages when under cold stress conditions, but avoid caffeine. Personnel shall take required breaks to warm up as needed. Provide heated areas for rest periods.	**L**
	Struck by material	Personnel shall never place themselves under suspended/overhead loads. Material shall be loaded over the dump bed and not allowed to pass over operator cab. Haul units shall be equipped with adequate Falling Object Protective Structure. All loads are to be covered when traveling on the road weather on base or off base. NO driver operator shall climb into truck or over 6 feet above ground level with out proper fall protection	**L**
	Handling and placing of Slide Rail system	Slide Rail system shall be installed as per manufactures direction Deploy corner posts as per drawing and press in place with bucket Use heavy equipment to the extent possible to avoid manual lifting, pulling and tugging. Slde in side rails and sucure the rails and continue to excavate soil until next rail is ready to install.	**L**

Equipment to be Used	Training Requirements/Competent or Qualified Personnel Name(s)	Inspection Requirements
Personal Protective Equipment Hard hat Safety glasses with side shields Safety-toed boots Work gloves Class 2 high visibility vests Hearing protection, as necessary Long Sleeve Shirt and pants Other Equipment: Fire Extinguishers Caution tape Excavation perimeter protection First Aid Kit Drinking water Weather radio Insect repellant with DEET (Deep Woods Off™ or equivalent) Repel Permanone™ Communication devices	Competent Person (CP) / Qualified Person (QP): CP/SSHO James Vigerust_____ Alternate CP/SSHO_____ QP/First Aid and _____ QP/First Aid and CPR _____ Crane and Rigging Competent Person Training Requirements (as determined by the SSHO): Site safety orientation Emergency procedures Hearing conservation Applicable AHAs Lifting/back safety Fire extinguisher use Biological hazard identification and control Storm shelter location Lightning safety procedures Heat stress prevention and heat stroke treatment Cold stress prevention	Daily site safety inspection (SSHO) James Vigerust Daily site safety inspection (QCO) _____ Initial and daily equipment inspections. Overhead utilities and hazards (prior to operating equipment in area) Locate underground utilities (prior to intrusive activities) Excavation (at least daily) Housekeeping (daily) Fire extinguisher (monthly) Equipment and tools inspection (daily and before use) Survey areas for poisonous plants, insects, and animals(each work area) Check body for ticks (each evening during tick season) Identify closest usable storm shelter that is available

Table 5-1 Activity Hazard Analysis

Activity/Work Task: **Excavator and Backhoe Operations**	Overall Risk Assessment Code (RAC) (Use highest code)	**M**
Project Location: RSA-204 Redstone Arsenal	**Risk Assessment Code (RAC) Matrix**	
Contract/Project Number: W91ZLK-09-D-0006		
Date Prepared: 3/30/2015		
Prepared by (Name/Title):James Vigerust FPS		
Reviewed by (Name/Title): Doug Russell/HSM		
Notes: (Field Notes, Review Comments, etc.) This AHA serves as certification of hazard assessment.		

Severity	**Probability**				
	Frequent	Likely	Occasional	Seldom	Unlikely
Catastrophic	**E**	**E**	**H**	**H**	**M**
Critical	**E**	**H**	**H**	**M**	**L**
Marginal	**H**	**M**	**M**	**L**	**L**
Negligible	**M**	**L**	**L**	**L**	**L**

Step 1: Review each **"Hazard"** with identified safety **"Controls"** and determine RAC (See above)

"Probability" is the likelihood to cause an incident, near miss, or accident and identified as: Frequent, Likely, Occasional, Seldom, or Unlikely.

"Severity" is the outcome/degree if an incident, near miss, or accident did occur and identified as: Catastrophic, Critical, Marginal, or Negligible

Step 2: Identify the RAC (Probability/Severity) as E, H, M, or L for each "Hazard" on AHA. Annotate the overall highest RAC at the top of AHA.

RAC Chart

- **E = Extremely High Risk**
- **H = High Risk**
- **M = Moderate Risk**
- **L = Low Risk**

Job Steps	Hazards	Controls	RAC
Verify overhead and underground utilities locations. Set up equipment for operation. Inspect equipment for use. Inspect work area where equipment is to be used. Isolate work area, as appropriate. Move equipment to work area. Use excavator and/or backhoe to perform work.	Newly hired personnel and visitors. Unfamiliarity with: site, general (chemical, physical, environmental) site hazards, project safety rules and hazard control procedures, chain of command, and emergency procedures.	All personnel working on hazardous, toxic, and radioactive waste (HTRW) shall submit HAZWOPER training certificates [40-hour, 8-hour (if applicable), and supervisor (if applicable] to a Site Safety and Health Officer (SSHO). All personnel shall attend a site safety orientation. Other training certifications shall also be made available on site.	**M**
	Unqualified operator(s).	Verify operator is qualified and authorized for the equipment being used, which requires documentation as Designated Qualified Operator (DQO) or equivalent. Note: verify any state-specific licensing requirements are met, as necessary.	**M**
	Failure to properly plan daily activities.	A Job Safety Analysis (JSA) shall be prepared by the crew prior to commencing daily activities. The JSA shall be used as a component of the morning Tailgate Safety Meeting. The JSA shall be revised at any time throughout the workday when new tasks are initiated, unforeseen circumstances arise, or if working conditions change. Personnel shall implement Hazard Assessment Resolution Process. Personnel to conduct focused "I CARE" observations.	**M**

Job Steps	Hazards	Controls	RAC
See job steps above.	Complacency.	All personnel shall attend the morning safety meetings to re-focus themselves to hazards, emergency procedures and equipment, operational aspects, and change(s) in site/work conditions. Recommended control measures for the hazards shall be part of the discussion.	**M**
	Fire.	Fire extinguishers shall be available in work areas. A 4-A:60-B:C fire extinguisher shall be available when refueling at the project site. Excavators shall be equipped with a 10-B:C fire extinguisher. The SSHO shall establish smoking areas. Smoke only in designated areas. Only discard cigarette butts in proper receptacles – never discard cigarette butts onto the ground. Smoking shall not be permitted within 50 feet of fueling operations. Use caution with vehicle exhaust systems in grassy areas. Do not run vehicles or equipment while parked in dry, grassy areas. Engines shall be shut off and allowed to cool before refueling. Follow AHA for "Fueling Operations."	**M**
	Unsafe equipment.	Before excavating equipment is placed in use at the project, it shall be inspected and tested in accordance with the manufacturer's recommendations and shall be certified in writing by a competent person to meet the manufacturer's recommendations. Subsequent re-inspections will be conducted at least annually thereafter. These inspections shall be documented on the USACE Safety Inspection Checklist for Construction Equipment. All safety deficiencies noted during the inspection shall be corrected prior to the equipment being placed in service at the project. All excavating equipment shall be inspected by the operator prior to use on the project and shall then be inspected on a daily basis. Daily inspections shall be documented on the Daily Equipment Inspection form. Deficiencies in equipment shall be noted on the inspection form. Do not use equipment that is not in proper operating condition. Attach a "Danger – Do Not Use" tag to inoperable equipment, remove key from equipment, and give key to the supervisor when notifying him/her of the inoperable equipment.. Verify all manufacturers' safety guards, features, controls, back-up alarms, horns, and equipment are functioning properly and as intended by the manufacturer. Install and maintain equipment attachments and their operating systems according to manufacturer's specifications. Make frequent visual inspections of quick-disconnect systems (systems for connecting attachments to excavators) especially after changing attachments.	**M**

Job Steps	Hazards	Controls	RAC
See job steps above.	Overhead/aboveground hazards and utilities.	Overhead and aboveground hazards shall be evaluated prior to moving equipment on the project site. Complete a Site Layout Plan prior to mobilizing the equipment. The plan shall identify all overhead and aboveground hazards in the active work area(s) and travel routes - include utilities, pipe racks, structures, restricted areas, pedestrian routes, and equipment/vehicle traffic. Power lines shall be assumed to be energized unless verified to be de-energized and visibly grounded. Operation beneath a power line that has not been verified as de-energized and grounded must maintain clearance distances stated below. Nominal System Voltage — Minimum Required Clearance Distance Up to 50 kV — 10 feet (3 m) Over 50 - 200 kV — 15 feet (4.6 m) Over 200 - 350 kV — 20 feet (6 m) Over 350 - 500 kV — 25 feet (7.6 m) Over 500 – 750 kV — 35 feet (10.7 m) Over 750 – 1,000 kV — 45 feet (13.7 m) For over 1,000 kV, the minimum required clearance distance will be established by the utility owner/operator or professional engineer who is a qualified person with respect to electrical power transmission and distribution. Identify and provide temporary visual barriers that help prevent encroachment with the lines. In areas where it is not feasible to use barricades, spotters shall be provided; however, the minimum clearance distances from electrical lines must be observed. Each work crew member shall be trained in the electrocution hazards and emergency procedures associated with contacting energized power lines. Post overhead hazard warning signs as necessary.	**M**

Job Steps	Hazards	Controls	RAC
See job steps above.	Underground utilities and other underground hazards.	Follow any additional procedures for intrusive activities identified in APP and Work Plan prior to commencing intrusive activities. Utilities shall be located and marked prior to commencing intrusive activities. Contact utility one-call service (811) at least 48 hour but not more than 10 days prior to commencing intrusive activities, excluding weekends or any state or federal holidays. Retain a copy of mark-out ticket for documentation purposes and QC purposes. Evaluate the work areas, ground conditions, and travel paths to identify any sensitive underground structures, unstable areas, dangerous slopes, and existing open excavations. Complete a Site Layout Plan prior to mobilizing the equipment. The plan shall identify all underground utilities and other underground hazards in the active work areas and travel routes. Cease work immediately if unknown utilities or utility markers are uncovered. Use manual excavation within 3 feet of known utilities. Each work crew member shall be trained in electrocution hazards, explosion/fire hazards, and emergency procedures associated with contacting energized power lines and pipelines. Immediately contact utility one-call service (811) if an underground utility is damaged, dislocated, or disturbed.	**M**
	Hand injuries.	Personnel shall wear leather gloves when handling materials with sharp edges, splinters, burrs, rough surfaces, etc. Items to be handled shall be inspected for sharp edges, splinters, burrs, rough surfaces, etc. prior to being handled. Personnel shall be aware of and avoid pinch point hazards.	**L**
	Noise.	All personnel shall wear hearing protection when operating noisy equipment. Personnel working in vicinity of noisy equipment shall wear hearing protection. Verify personnel noise exposures are safe by performing noise dosimetry.	**L**

Job Steps	Hazards	Controls	RAC
See job steps above.	Use of excavators and backhoes.	Only qualified personnel shall be permitted to operate equipment. It is the responsibility of the operator to read and understand the manufacturer's operator manual, the manufacturer's recommendations for each type and model of equipment to be operated, and the requirements of CB&I CMS-710-02-PR-05700 prior to operating equipment. Operators must know the capacity and operating characteristics of the equipment to be operated. When mounting or dismounting equipment, clean shoes and hands before climbing. Always use handrails, grab rails, and steps. Maintain a three-point contact/control with steps and handholds. Never jump on or off equipment. Never attempt to mount or dismount a moving machine. Do not use steering wheel or control levers as a handhold. Lower the boom (and loader when equipped) to a safe position with the bucket/attachment on the ground and turn off the excavator before dismounting equipment. The equipment must be attended at all times or attachments must be placed in the “transport lock position” or lowered to the ground. The operator is responsible for keeping the windows clear and keeping cab clean at all times. Equipment operators must wear seat belt at all times and keep body (hands, arms, legs, head, etc.) inside the protected area of the cab. Operations are to be performed only from the operators control station. All equipment shall be operated at safe speeds and in a safe manner. If equipped with such, use the machine stabilizers. Loads must be carried as low as possible to maintain stability of the equipment and operator visibility. Do not operate equipment on grades steeper than those specified by the manufacturer. When operating on a sloped area, always move up or down the slope and not across the slope. Avoid making turns on inclines. If it is necessary, make turns wide and slowly with load carried low. When traveling up or down inclines, do so with loaded buckets facing uphill and empty buckets facing downhill. The operator of equipment shall not use cellular telephone devices or head/earphones for entertainment purposes while operating equipment. The use of cell phones and other communication devices are permitted for job-related communications or emergency situations, when the equipment is not operating.	**M**

Job Steps	Hazards	Controls	RAC
See job steps above.	Use of excavators and backhoes (continued).	The operator shall not use attachments for which they were not designed to be used for, e.g., using a bucket to transport telephone poles. Follow the manufacturer's instructions for using positive locks on quick-disconnect equipment. Securely latch attachments such as quick-disconnect buckets before beginning work. Make frequent visual inspections of quick-disconnect systems — especially after changing attachments. The operator is to stay alert and focused at all times when the excavator or backhoe is in operation.	**M**
	Struck by and against	Wear PPE with high visibility vests when walking or working near moving equipment or vehicles. Prevent unauthorized workers or bystanders from entering work areas with equipment operations. Verify "**DANGER – STAY CLEAR"** (or equivalent) warning sign(s) is visibly posted on the equipment. Personnel shall maintain a safe distance from operations. Keep alert for movement of equipment, loads, excavations, piles, and ejected matter. Personnel shall not be permitted in the swing radius of the equipment. Precautions must be implemented to keep personnel out of excavations and at least 10 ft. (3 m) away from the equipment and its maximum boom and/or counterweight swing radius when operating. Accessible areas within the swing radius of the equipment are to be barricaded to prevent personnel from being struck or crushed, as appropriate. Do not approach an excavator or backhoe without first establishing communication with the operator or spotter (eye contact and then a signal to proceed after the equipment has been shut down: • Excavator bucket planted, powered down, and controls locked. • Backhoe bucket planted, engine shut off. Don't allow anyone to stand under a suspended load or the boom, arm, or bucket. Operator to stop operations if personnel are observed within the swing radius.	**M**

Job Steps	Hazards	Controls	RAC
See job steps above.	Spotter operations.	Use designated spotters as necessary and as determined by the operator or supervisor. Establish communication before starting work – hand signals, whistles, radios, air horn, audible alarm, or other means of effective jobsite communication. When a designated spotter is used, the equipment shall not be moved unless the designated spotter giving signals is in full view of the operator. The spotter must maintain line of site or communication with the equipment operator. For movement of mobile equipment in congested areas, a designated spotter shall be in full view of the operator and shall direct the movement. In some cases, multiple spotters may be required.	**M**
	Rigging and lifting with hydraulic equipment.	Follow AHA for “Rigging and Lifting with Hydraulic Equipment.”	**M**
	Excavation hazards.	Follow the project Excavation/Trenching Plan.	**M**
	Dust.	Control dust by maintaining equipment operation rates. Control dust by applying water. Personnel shall stay out of dust and work from upwind when possible. Perform dust monitoring as specified in the APP.	**L**

Job Steps	Hazards	Controls	RAC
See job steps above.	Slips, trips, and falls.	Understand the hazards of slips, trips, and falls – consider the consequences. Do not jump from equipment or elevated surfaces. Clean-up work areas throughout the day and at the end of each workday. Use three-point contact rule for entering/exiting vehicles, trucks, and equipment. Use hand rails and other stationary objects (door frames, door knobs, steering wheels, walls, etc.) to increase stability. Use extra caution when walking on wet, muddy, frosty, icy, or snow-covered surfaces. Consider postponing work as necessary and feasible. Increase your awareness, keep alert, stay focused, and know your environment. Stay away from slopes, hills, and grades. Be cautious when using stairs. Remove snow and ice when possible (shoveling, chipping, and salt application). Apply traction aids, such as sand, gravels, and straw. Lower your center of gravity when necessary. Slow down - take smaller steps.	**M**
	Insect bites and stings.	Review injury and illness potential with workers. Inspect work areas for bee nests and activity prior to commencing work in that area. Wear PPE, such as disposable coveralls, to keep insects away from the skin. Expect to encounter insects when working in warm weather – especially at locations with vegetation present. Use protective insect repellents containing DEET (Deep Woods Off or equivalent) to prevent insect bites, unless individual allergies and sensitivities prevent its use. Consider applying Permethrin (Repel Permanone or equivalent) preparations to clothing to repel ticks, chiggers, mosquitoes, and/or spiders. Check limbs/body for insects/ insect bites upon removing PPE and again during showering. Immediately notify supervisor or SSHO of insect bites, stings, irritations, rashes, or flu-like symptoms.	**L**

Job Steps	Hazards	Controls	RAC
See job steps above.	Contact dermatitis from poisonous and irritating plants (poison ivy, poison oak, and poison sumac).	Learn to identify poisonous and irritating plants. Check around work areas to identify if poisonous and irritating plants are present. Identify workers who are known especially sensitive to poisonous and irritating plants and plan work accordingly. Wear Tyvek® coveralls to avoid skin contact with irritating plants. Immediately notify the SSHO if you suspect you contacted an irritating plant. Avoid unnecessary clearing of plant/vegetation areas. Follow additional procedures outlined in the APP.	**L**
	Severe weather.	The SSHO to monitor weather conditions each day in order to plan and prepare for hazardous conditions. The SSHO to identify the nearest suitable storm shelter at each work location. Upon seeing lightning or hearing thunder, outdoor activities shall be suspended and personnel shall be evacuated to safe areas (inside vehicles, buildings, or tornado shelters as appropriate).	**M**
	Heat stress.	Allow several days for workers to acclimatize to elevated ambient temperatures. Monitor for heat stress and perform physiological monitoring in accordance with the requirements of the APP. Drink plenty of water when under heat stress conditions (~ 1 quart per hour). Provide for adequate electrolyte replacement. Personnel shall take required breaks to cool down as needed. Provide shade or shelter during rest periods.	**M**
	Cold stress.	Workers should dress in layers in response to the conditions. Monitor for cold stress in accordance with the requirements of the APP. Drink warm beverages when under cold stress conditions, but avoid caffeine. Personnel shall take required breaks to warm up as needed. Provide heated areas for rest periods.	**L**

Equipment to be Used	Training Requirements/Competent or Qualified Personnel Name(s)	Inspection Requirements
Personal Protective Equipment Hard hat Safety glasses with side shields Safety-toed boots Work gloves Class 2 high visibility vests Hearing protection, as necessary Other Equipment: Back or trackhoe Fire Extinguishers Caution tape Excavation perimeter protection First Aid Kit Drinking water Weather radio Insect repellant with DEET (Deep Woods Off™ or equivalent) Repel Permanone™	Competent Person (CP) / Qualified Person (QP): CP/SSHO James Vigerust_____ Alternate CP/SSHO_____ QP/First Aid and _____ QP/First Aid and CPR _____ Designated Qualified Operators (DQO): DQO _____ DQO _____ Training Requirements (as determined by the SSHO): Site safety orientation Emergency procedures Hearing conservation Applicable AHAs Lifting/back safety Fire extinguisher use Biological hazard identification and control Storm shelter location Lightning safety procedures Heat stress prevention and heat stroke treatment Cold stress prevention	Daily site safety inspection (SSHO) James Vigerust_____ Daily site safety inspection (QCO) _____ Overhead utilities and hazards (prior to operating equipment in area) Locate underground utilities (prior to intrusive activities) Excavation (at least daily) Housekeeping (daily) Fire extinguisher (monthly) Equipment and tools inspection (daily and before use) Survey areas for poisonous plants, insects, and animals(each work area) Check body for ticks (each evening during tick season) Identify closest usable storm shelter that is available

Printed Name	Signature	Representing	Date

Table 5-1 Activity Hazard Analysis

Activity/Work Task: Waste Management	Overall Risk Assessment Code (RAC)	**M**
Project Location: RSA-204 Redstone AL	**Risk Assessment Code (RAC) Matrix**	
Contract Number: W91ZLK-09-D-0006		
Date Prepared: July 2015		
Prepared by: James Vigerust/SSHO		
Reviewed by: Doug Russell/HSM		
Notes: (Field Notes, Review Comments, etc.)		

Severity	**Probability**				
	Frequent	Likely	Occasional	Seldom	Unlikely
Catastrophic	**E**	**E**	**H**	**H**	**M**
Critical	**E**	**H**	**H**	**M**	**L**
Marginal	**H**	**M**	**M**	**L**	**L**
Negligible	**M**	**L**	**L**	**L**	**L**

Step 1: Review each **"Hazard"** with identified safety **"Controls"** and determine RAC (See above)

"Probability" is the likelihood to cause an incident, near miss, or accident and identified as: Frequent, Likely, Occasional, Seldom or Unlikely.

"Severity" is the outcome/degree if an incident, near miss, or accident did occur and identified as: Catastrophic, Critical, Marginal, or Negligible

Step 2: Identify the RAC (Probability/Severity) as E, H, M, or L for each "Hazard" on AHA. Annotate the overall highest RAC at the top of AHA.

RAC Chart

- **E = Extremely High Risk**
- **H = High Risk**
- **M = Moderate Risk**
- **L = Low Risk**

Job Steps	Hazards	Controls	RAC
Drums Handling	Handling heavy objects	• Observe proper lifting techniques. • Obey sensible lifting limits (50 lbs. maximum per person manual lifting). • Use mechanical lifting equipment (handcarts, trucks, and forklift) to move large loads, awkward loads. • Check and secure drum lids before moving.	**M**
	Caught in/between moving parts	• Identify and understand parts of equipment, which may cause crushing, pinching, rotating, or similar motions. • Assure guards are in place to protect from these parts of equipment during operations. • Abrasion resistant work gloves when the possibility of pinching, or other injury may be caused by moving / handling large or heavy objects. • Maintain all equipment in a safe condition. • Keep all guards in place during use. • De-energize and lock-out machinery before maintenance or service	**M**

16—AHA—Waste Management

Job Steps	Hazards	Controls	RAC
Drums Handling (continued)	Slips, trips, falls	• Clear walkways, platforms, access steps and work areas of equipment, tools, and debris. • Mark, identify, or barricade other obstructions. • Work areas, platforms, and walkways should be kept free of materials, debris, and obstructions such as ice, grease, or oil that could cause a surface to become slick or otherwise hazardous. • Maintain three-point contact when mounting / dismounting heavy equipment. • Maintain good housekeeping	**M**
	Sharp objects	• Wear abrasion resistant work gloves. • Inspect hand tools before use. • Keep guards in place during use.	**M**
	Vehicle traffic	• Use spotter when backing. • Survey route to work locations. Inform crew of hazards. • Wear reflective vest when exposed to heavy equipment or traffic.	**M**
	Struck by/against heavy equipment, protruding objects	• Isolate equipment swing area. • Require backup alarms on all heavy equipment. • Make eye contact with operators before approaching equipment. • Understand and review hand signals.	**L**
	Inhalation and contact with hazardous substances	• Review hazardous properties of site contaminants with workers before work begin. • Monitor breathing zone pursuant to SSHP. • Avoid skin contact with contaminated waste. • Avoid inhalation of dust or vapors	**M**

Equipment to be Used	Training Requirements/Competent or Qualified Personnel name(s)	Inspection Requirements
• Level D: hard hat, safety glasses, safety boots, ear protection, abrasion resistant gloves • Hand tools • Drum dolly • Forklift	• Tailgate Safety Meeting • Site-specific orientation • HAZWOPER 40-hr. • HAZWOPER 8-hour refresher • 8-hr Supervisor training • Forklift operator training • James Vigerust – CP/SSHO	• Use this AHA as a checklist • Inspect allequipment and tools prior to use per manufacturer requirements.

Table 5-1 Activity Hazard Analysis

Activity/Work Task: Excavation, Backfill, Slide Rail Trench Protection	Overall Risk Assessment Code (RAC) (Use highest code)	**M**
Project Location: RSA-204 Redstone Arsenal	**Risk Assessment Code (RAC) Matrix**	
Contract/Project Number: W91ZLK-09-D-0006		
Date Prepared: 3/31/2015		
Prepared by (Name/Title):James Vigerust FPS		
Reviewed by (Name/Title): Doug Russell/HSM		

Severity	**Probability**				
	Frequent	Likely	Occasional	Seldom	Unlikely
Catastrophic	**E**	**E**	**H**	**H**	**M**
Critical	**E**	**H**	**H**	**M**	**L**
Marginal	**H**	**M**	**M**	**L**	**L**
Negligible	**M**	**L**	**L**	**L**	**L**

Notes: (Field Notes, Review Comments, etc.)
This AHA serves as certification of hazard assessment.

Step 1: Review each **"Hazard"** with identified safety **"Controls"** and determine RAC (See above)

"Probability" is the likelihood to cause an incident, near miss, or accident and identified as: Frequent, Likely, Occasional, Seldom, or Unlikely.

"Severity" is the outcome/degree if an incident, near miss, or accident did occur and identified as: Catastrophic, Critical, Marginal, or Negligible

Step 2: Identify the RAC (Probability/Severity) as E, H, M, or L for each "Hazard" on AHA. Annotate the overall highest RAC at the top of AHA.

RAC Chart

- **E = Extremely High Risk**
- **H = High Risk**
- **M = Moderate Risk**
- **L = Low Risk**

Job Steps	Hazards	Controls	RAC
Verify overhead and underground utilities locations. Set up equipment for operation. Inspect equipment for use. Inspect work area where equipment is to be used. Isolate work area, as appropriate. Move equipment to work area. Excavate and install slide rail trench protection	Newly hired personnel and visitors. Unfamiliarity with: site, general (chemical, physical, environmental) site hazards, project safety rules and hazard control procedures, chain of command, and emergency procedures.	All personnel shall attend a site safety orientation. After personnel are trained in the contents of the Accident Prevention Plan (APP) and the Site Safety and Health Plan (SSHP), they shall sign the APP Acknowledgment Form and the SSHP Acknowledgment Form. Review emergency procedures and evacuation plans.	**M**
	Unqualified operator(s).	Verify operator is qualified and authorized for the equipment being used. Only personnel authorized by employer shall operate equipment.	**M**
	Failure to properly plan daily activities.	A Job Safety Analysis (JSA) shall be prepared by the crew prior to commencing daily activities. The JSA shall be used as a component of the morning Tailgate Safety Meeting. The JSA shall be revised at any time throughout the workday when new tasks are initiated, unforeseen circumstances arise, or if working conditions change. Personnel shall implement Hazard Assessment Resolution Process and Safety Step Back.Personnel to conduct focused and leading indicator "I CARE" observations.	**M**

Job Steps	Hazards	Controls	RAC
See job steps above.	Complacency.	All personnel shall attend the morning safety meetings to re-focus themselves to hazards, emergency procedures and equipment, operational aspects, and change(s) in site/work conditions. Recommended control measures for the hazards shall be part of the discussion.	**M**
	Fire.	Fire extinguishers shall be available in work areas. A 4-A:60-B:C fire extinguisher shall be available when refueling at the project site. Excavators shall be equipped with a 10-B:C fire extinguisher. The SSHO shall establish smoking areas. Smoke only in designated areas. Only discard cigarette butts in proper receptacles – never discard cigarette butts onto the ground. Smoking shall not be permitted within 50 feet of fueling operations. Use caution with vehicle exhaust systems in grassy areas. Do not run vehicles or equipment while parked in dry, grassy areas. Engines shall be shut off and allowed to cool before refueling. Follow AHA for "Fueling Operations."	**M**
	Unsafe equipment.	Before excavating equipment is placed in use at the project, it shall be inspected and tested in accordance with the manufacturer's recommendations and shall be certified in writing by a competent person to meet the manufacturer's recommendations. Subsequent re-inspections will be conducted at least annually thereafter. These inspections shall be documented on a Checklist for Construction Equipment. All safety deficiencies noted during the inspection shall be corrected prior to the equipment being placed in service at the project. All excavating equipment shall be inspected by the operator prior to use on the project and shall then be inspected on a daily basis.Deficiencies in equipment shall be noted on the inspection form. Do not use equipment that is not in proper operating condition. Attach a "Danger – Do Not Use" tag to inoperable equipment, remove key from equipment, and give key to the supervisor when notifying him/her of the inoperable equipment.. Verify all manufacturers' safety guards, features, controls, back-up alarms, horns, and equipment are functioning properly and as intended by the manufacturer. Install and maintain equipment attachments and their operating systems according to manufacturer's specifications. Make frequent visual inspections of quick-disconnect systems (systems for connecting attachments to excavators) especially after changing attachments. Verify controls are properly labeles as to equipment function.	**M**

Job Steps	Hazards	Controls	RAC
See job steps above.	Overhead/aboveground hazards and utilities.	Follow legacy Safety Procedure HS-308, “Underground/Overhead Utility Contact Prevention”. Overhead and aboveground hazards shall be evaluated prior to moving equipment on the project site. Complete a Site Layout Plan prior to mobilizing the equipment. The plan shall identify all overhead and aboveground hazards in the active work area(s) and travel routes - include utilities, pipe racks, structures, restricted areas, pedestrian routes, and equipment/vehicle traffic. Power lines shall be assumed to be energized unless verified to be de-energized and visibly grounded. Operation beneath a power line that has not been verified as de-energized and grounded must maintain clearance distances stated below. Nominal System Voltage — Minimum Required Clearance Distance Up to 50 kV — 10 feet (3 m) Over 50 - 200 kV — 15 feet (4.6 m) Over 200 - 350 kV — 20 feet (6 m) Over 350 - 500 kV — 25 feet (7.6 m) Over 500 – 750 kV — 35 feet (10.7 m) Over 750 – 1,000 kV — 45 feet (13.7 m) For over 1,000 kV, the minimum required clearance distance will be established by the utility owner/operator or professional engineer who is a qualified person with respect to electrical power transmission and distribution. Identify and provide temporary visual barriers that help prevent encroachment with the lines. In areas where it is not feasible to use barricades, spotters shall be provided; however, the minimum clearance distances from electrical lines must be observed. Each work crew member shall be trained in the electrocution hazards and emergency procedures associated with contacting energized power lines. Post overhead hazard warning signs as necessary.	**M**

Job Steps	Hazards	Controls	RAC
See job steps above.	Underground utilities and other underground hazards.	Follow any additional procedures for intrusive activities identified in APP and Work Plan prior to commencing intrusive activities. Utilities shall be located and marked prior to commencing intrusive activities. Contact utility one-call service (811) at least 48 hour but not more than 10 days prior to commencing intrusive activities, excluding weekends or any state or federal holidays. Retain a copy of mark-out ticket for documentation purposes and QC purposes. Evaluate the work areas, ground conditions, and travel paths to identify any sensitive underground structures, unstable areas, dangerous slopes, and existing open excavations. Complete a Site Layout Plan prior to mobilizing the equipment. The plan shall identify all underground utilities and other underground hazards in the active work areas and travel routes. Cease work immediately if unknown utilities or utility markers are uncovered. Use manual excavation within 3 feet of known utilities. Each work crew member shall be trained in electrocution hazards, explosion/fire hazards, and emergency procedures associated with contacting energized power lines and pipelines. Immediately contact Public Works Department in event utilities are encountered that were not previously marked. Notify Public Works in event any damage to utilities occur.	**M**
	Hand injuries.	Personnel shall wear appropriate leather, heavy cotton or synthetic gloves when handling materials with sharp edges, splinters, burrs, rough surfaces, etc. Items to be handled shall be inspected for sharp edges, splinters, burrs, rough surfaces, etc. prior to being handled. Personnel shall be aware of and avoid pinch point hazards.	**M**
	Noise.	All personnel shall wear hearing protection when operating noisy equipment. Personnel working in vicinity of noisy equipment shall wear hearing protection. Verify personnel noise exposures are safe by performing noise dosimetry.	**L**

Job Steps	Hazards	Controls	RAC
See job steps above.	Use of excavators and backhoes.	Only qualified personnel shall be permitted to operate equipment. It is the responsibility of the operator to read and understand the manufacturer's operator manual, the manufacturer's recommendations for each type and model of equipment to be operated, and the requirements of CB&I CMS-710-02-PR-05700 prior to operating equipment. Operators must know the capacity and operating characteristics of the equipment to be operated. When mounting or dismounting equipment, clean shoes and hands before climbing. Always use handrails, grab rails, and steps. Maintain a three-point contact/control with steps and handholds. Never jump on or off equipment. Never attempt to mount or dismount a moving machine. Do not use steering wheel or control levers as a handhold. Lower the boom (and loader when equipped) to a safe position with the bucket/attachment on the ground and turn off the excavator before dismounting equipment. The equipment must be attended at all times or attachments must be placed in the “transport lock position” or lowered to the ground. The operator is responsible for keeping the windows clear and keeping cab clean at all times. Equipment operators must wear seat belt at all times and keep body (hands, arms, legs, head, etc.) inside the protected area of the cab. Operations are to be performed only from the operators control station. All equipment shall be operated at safe speeds and in a safe manner. If equipped with such, use the machine stabilizers. Loads must be carried as low as possible to maintain stability of the equipment and operator visibility. Do not operate equipment on grades steeper than those specified by the manufacturer. When operating on a sloped area, always move up or down the slope and not across the slope. Avoid making turns on inclines. If it is necessary, make turns wide and slowly with load carried low. When traveling up or down inclines, do so with loaded buckets facing uphill and empty buckets facing downhill. The operator of equipment shall not use cellular telephone devices or head/earphones for entertainment purposes while operating equipment. The use of cell phones and other communication devices are permitted for job-related communications or emergency situations, when the equipment is not operating.	**M**

Job Steps	Hazards	Controls	RAC
See job steps above.	Use of excavators and backhoes (continued).	The operator shall not use attachments for which they were not designed to be used for, e.g., using a bucket to transport telephone poles. Follow the manufacturer's instructions for using positive locks on quick-disconnect equipment. Securely latch attachments such as quick-disconnect buckets before beginning work. Make frequent visual inspections of quick-disconnect systems — especially after changing attachments. The operator is to stay alert and focused at all times when the excavator or backhoe is in operation.	**M**
	Struck by and against	Wear PPE with high visibility vests when walking or working near moving equipment or vehicles. Prevent unauthorized workers or bystanders from entering work areas with equipment operations. Verify "**DANGER – STAY CLEAR"** (or equivalent) warning sign(s) is visibly posted on the equipment. Personnel shall maintain a safe distance from operations. Keep alert for movement of equipment, loads, excavations, piles, and ejected matter. Personnel shall not be permitted in the swing radius of the equipment. Precautions must be implemented to keep personnel out of excavations and at least 10 ft. (3 m) away from the equipment and its maximum boom and/or counterweight swing radius when operating. Accessible areas within the swing radius of the equipment are to be barricaded to prevent personnel from being struck or crushed, as appropriate. Do not approach an excavator or backhoe without first establishing communication with the operator or spotter (eye contact and then a signal to proceed after the equipment has been shut down: • Excavator bucket planted, powered down, and controls locked. • Backhoe bucket planted, engine shut off. Don't allow anyone to stand under a suspended load or the boom, arm, or bucket. Operator to stop operations if personnel are observed within the swing radius.	**M**

Job Steps	Hazards	Controls	RAC
See job steps above.	Spotter operations.	Use designated spotters as necessary and as determined by the operator or supervisor. Establish communication before starting work – hand signals, whistles, radios, air horn, audible alarm, or other means of effective jobsite communication. When a designated spotter is used, the equipment shall not be moved unless the designated spotter giving signals is in full view of the operator. The spotter must maintain line of site or communication with the equipment operator. For movement of mobile equipment in congested areas, a designated spotter shall be in full view of the operator and shall direct the movement. In some cases, multiple spotters may be required.	**M**
	Sampling from bucket.	Position the sampling support and collection area on the cab side of the excavator to minimize operator blind spots created by the excavator boom assembly. Verify the operator is aware of your intention to collect samples from the bucket. Prior to sampling, the equipment operator shall fully lower the bucket to the ground, set the safety lockout lever to isolate joystick controls, decelerate the engine to idle level and signal the sample technician it is safe to approach the bucket. For backhoes, the bucket shall be planted on the ground and the engine shut down prior to approaching the bucket to obtain a sample. Keep out from between the excavator bucket and fixed objects, vehicles, or equipment when sampling. The operator should swing the machine to where the boom is at least at a 45-degree angle away from the excavation.	M
	Excavation hazards.	Follow the project Excavation/Trenching Plan.	**M**
	Dust or potential airborne hazards	Control dust by maintaining equipment operation rates. Control dust by applying water. Personnel shall stay out of dust and work from upwind when possible.	**M**

Job Steps	Hazards	Controls	RAC
See job steps above.	Slips, trips, and falls.	Understand the hazards of slips, trips, and falls – consider the consequences. Do not jump from equipment or elevated surfaces. Clean-up work areas throughout the day and at the end of each workday. Use three-point contact rule for entering/exiting vehicles, trucks, and equipment. Use hand rails and other stationary objects (door frames, door knobs, steering wheels, walls, etc.) to increase stability. Use extra caution when walking on wet, muddy, frosty, icy, or snow-covered surfaces. Consider postponing work as necessary and feasible. Increase your awareness, keep alert, stay focused, and know your environment. Stay away from slopes, hills, and grades. Be cautious when using stairs. Remove snow and ice when possible (shoveling, chipping, and salt application). Apply traction aids, such as sand, gravels, and straw. Lower your center of gravity when necessary. Slow down - take smaller steps.	**M**
	Insect bites and stings.	Review injury and illness potential with workers. Inspect work areas for bee nests and activity prior to commencing work in that area. Wear PPE, such as disposable coveralls, to keep insects away from the skin. Expect to encounter insects when working in warm weather – especially at locations with vegetation present. Use protective insect repellents containing DEET (Deep Woods Off or equivalent) to prevent insect bites, unless individual allergies and sensitivities prevent its use. Consider applying Permethrin (Repel Permanone or equivalent) preparations to clothing to repel ticks, chiggers, mosquitoes, and/or spiders. Check limbs/body for insects/ insect bites upon removing PPE and again during showering. Immediately notify supervisor or SSHO of insect bites, stings, irritations, rashes, or flu-like symptoms.	**L**

Job Steps	Hazards	Controls	RAC
See job steps above.	Contact dermatitis from poisonous and irritating plants (poison ivy, poison oak, and poison sumac).	Learn to identify poisonous and irritating plants. Check around work areas to identify if poisonous and irritating plants are present. Identify workers who are known especially sensitive to poisonous and irritating plants and plan work accordingly. Wear Tyvek® coveralls to avoid skin contact with irritating plants. Immediately notify the SSHO if you suspect you contacted an irritating plant. Avoid unnecessary clearing of plant/vegetation areas. Follow additional procedures outlined in the APP.	**L**
	Severe weather.	The SSHO to monitor weather conditions each day in order to plan and prepare for hazardous conditions. The SSHO to identify the nearest suitable storm shelter at each work location. Upon seeing lightning or hearing thunder, outdoor activities shall be suspended and personnel shall be evacuated to safe areas (inside vehicles, buildings, or tornado shelters as appropriate).	**M**
	Heat stress.	Allow several days for workers to acclimatize to elevated ambient temperatures. Monitor for heat stress and perform physiological monitoring in accordance with the requirements of the APP. Drink plenty of water when under heat stress conditions (~ 1 quart per hour). Provide for adequate electrolyte replacement. Personnel shall take required breaks to cool down as needed. Provide shade or shelter during rest periods.	**M**

Job Steps	Hazards	Controls	RAC
See job steps above.	Cold stress.	Workers should dress in layers in response to the conditions. Monitor for cold stress in accordance with the requirements of the APP. Drink warm beverages when under cold stress conditions, but avoid caffeine. Personnel shall take required breaks to warm up as needed. Provide heated areas for rest periods.	**L**
	Struck by material	Personnel shall never place themselves under suspended/overhead loads. Material shall be loaded over the dump bed and not allowed to pass over operator cab. Haul units shall be equipped with adequate Falling Object Protective Structure. All loads are to be covered when traveling on the road weather on base or off base. NO driver operator shall climb into truck or over 6 feet above ground level with out proper fall protection	**L**
	Handling and placing of Slide Rail system	Slide Rail system shall be installed as per manufactur's direction. Deploy corner posts as per drawing and press in place with bucket. Use heavy equipment to the extent possible to avoid manual lifting, pulling and tugging. Slde in side rails and sucure the rails and continue to excavate soil until next rail is ready to install.	**L**

Equipment to be Used	Training Requirements/Competent or Qualified Personnel Name(s)	Inspection Requirements
Personal Protective Equipment Hard hat Safety glasses with side shields Safety-toed boots Work gloves Class 2 high visibility vests Hearing protection, as necessary Other Equipment: Fire Extinguishers Caution tape Excavation perimeter protection First Aid Kit Drinking water Weather radio Insect repellant with DEET (Deep Woods Off™ or equivalent) Repel Permanone™ Communication devices	Competent Person (CP) / Qualified Person (QP): CP/SSHO James Vigerust_____ Alternate CP/SSHO_____ QP/First Aid and _____ QP/First Aid and CPR _____ Training Requirements (as determined by the SSHO): Site safety orientation Emergency procedures Hearing conservation Applicable AHAs Lifting/back safety Fire extinguisher use Biological hazard identification and control Storm shelter location Lightning safety procedures Heat stress prevention and heat stroke treatment Cold stress prevention	Daily site safety inspection (SSHO) James Vigerust Daily site safety inspection (QCO) _____ Initial and daily equipment inspections. Overhead utilities and hazards (prior to operating equipment in area) Locate underground utilities (prior to intrusive activities) Excavation (at least daily) Housekeeping (daily) Fire extinguisher (monthly) Equipment and tools inspection (daily and before use) Survey areas for poisonous plants, insects, and animals(each work area) Check body for ticks (each evening during tick season) Identify closest usable storm shelter that is available

Table 5-1 Activity Hazard Analysis

Activity/Work Task: Equipment Decontamination	Overall Risk Assessment Code (RAC) (Use highest code)	**M**
Project Location: RSA-204 Redstone AL	**Risk Assessment Code (RAC) Matrix**	
Contract Number: W91ZLK-09-D-0006		
Date Prepared: 03/30/2015		
Prepared by (Name/Title): James Vigerust Health and Safety		
Reviewed by (Name/Title): Doug Russell/HSM		

Severity	**Probability**				
	Frequent	Likely	Occasional	Seldom	Unlikely
Catastrophic	**E**	**E**	**H**	**H**	**M**
Critical	**E**	**H**	**H**	**M**	**L**
Marginal	**H**	**M**	**M**	**L**	**L**
Negligible	**M**	**L**	**L**	**L**	**L**

Notes: (Field Notes, Review Comments, etc.)

Step 1: Review each **"Hazard"** with identified safety **"Controls"** and determine RAC (See above)

"Probability" is the likelihood to cause an incident, near miss, or accident and identified as: Frequent, Likely, Occasional, Seldom, or Unlikely.

"Severity" is the outcome/degree if an incident, near miss, or accident did occur and identified as: Catastrophic, Critical, Marginal, or Negligible

Step 2: Identify the RAC (Probability/Severity) as E, H, M, or L for each "Hazard" on AHA. Annotate the overall highest RAC at the top of AHA.

RAC Chart
E = Extremely High Risk
H = High Risk
M = Moderate Risk
L = Low Risk

Job Steps	Hazards	Controls	EM 385-1-1	RAC
Clean equipment.	Failure to properly plan daily activities.	• Complete Job Safety Analysis for each task, as specified in, "Job Safety Analysis (JSA)." Use Hazard Assessment Resolution Program frequently – for each task to be completed.		**M**
	Exposure to contaminants.	• Maintain work zones and decontamination areas. Level D - Modified personal protective equipment shall be worn as required in the Accident Prevention Plan or Site Safety and Health Plan. Personnel shall perform proper decontamination procedures each time when exiting the Exclusion Zone.	28 05.A.01	**L**
	Poor lighting.	• Additional lighting shall be put in place as necessary. Temporary lighting shall be protected with ground fault circuit interrupters (GFCI).	07.A.01 11.D.05	**L**
	Slips, trips, and falls.	• Work areas shall be kept organized during work activities. Housekeeping shall be maintained. Personnel shall use caution when walking/working on wet surfaces.	14.C.01-10	**M**

Job Steps	Hazards	Controls	EM 385-1-1	RAC
Clean equipment (continued).	Electrical.	• GFCIs shall be used on all power tools and extension cords. Extension cords, power tools, and lighting equipment shall be inspected before each use, protected from damage, and kept out of wet areas.	11.D.05 11.A.03	**M**
	Heavy lifting.	• No individual employee is permitted to lift any object that weighs over 50 pounds. Proper lifting techniques shall be used. Multiple employees or the use of mechanical lifting devices are required for lifting objects over the 50-pound limit.	14.A.01	**M**
	Noise.	• Personnel shall wear hearing protection when operating pressure washer.	05.C	**L**
	Fire.	• Fire extinguishers shall be placed in work areas. Smoking shall only be allowed in designated areas.	09.E.01 09.A.06	**L**
	Heat stress.	• Personnel shall drink plenty of cool water. Personnel shall pace themselves while performing strenuous work and take adequate breaks in a cool area.	06.I 02.C	**M**
	Use of pressure or steam washer.	• The pressure/steam washer shall be inspected before each use. The manufacturer's instruction manual shall be used to guide the inspection process. Personnel shall be trained in the use of the washing equipment. All personnel working in the equipment decontamination area shall be trained in the emergency shut-off procedures for the equipment being used. The minimum amount of steam/pressure that will complete the job should be used. Pressure washers exceeding 3000 psi shall not be used without the approval of the Health and Safety Manager. The spray from such equipment shall only be directed at surfaces to be cleaned and never at body parts or other personnel. • Personnel in the immediate area shall use face shields and metatarsal/shin guards. Personnel shall keep firm grip on wand and not point it at anything that is not being washed. Pressure washer operators must maintain good footing. The trigger on the wand shall never be wired/fixed open. Operators are to take adequate breaks to avoid fatigue. • Hot surfaces shall be avoided. Units shall be shut off and allowed to cool prior to re-fueling (if gas-powered). • Carbon monoxide shall be monitored if gas-powered pressure washers are used in areas with limited ventilation. Carbon monoxide concentrations shall not be allowed to exceed 25 parts per million within any indoor areas.	13.A.02 13.A.02 09.B.21 13.A.12	**L**

Job Steps	Hazards	Controls	EM 385-1-1	RAC
Clean equipment (continued).	Spills of decontamination water.	• All waste handling activity shall be performed on visqueen (polyethylene sheeting) lined work surfaces. Waste liquids shall be stored with secondary containment. Lids and bungs shall be secured when drums are in storage or are being moved. Spill cleanup equipment shall be readily available when handling wastes. Drums containing waste shall be inspected on a daily basis. Spills shall be immediately reported to the Site Safety and Health Officer.	09.B.18	**L**

Equipment to be Used	Training Requirements/Competent or Qualified Personnel name(s)	Inspection Requirements
Personal Protective Equipment - Level D - Modified: Hard hat Safety glasses Safety-toed boots Face shield Meta tarsal and leg protection Work gloves PVC rain-gear or Poly coated Tyvek Protective over-boots Hearing protection Equipment: GFCI Fire extinguishers Emergency eyewash First aid kit Drinking water Weather radio or AM/FM radio Spill control equipment	Competent Person (CP) / Qualified Person (QP): James Vigerust – QP/SSHO James Vigerust – QP/First Aid and CPR Training Requirements: Site safety orientation HAZWOPER 40-Hour Lifting/back safety Fire extinguisher use Emergency procedures National Lightning Safety Institute Lightning Safety procedures	Daily site safety inspection (SSHO) – James Vigerust Daily site safety inspection (QCO) – Housekeeping (daily) Fire extinguisher (weekly) Equipment and tools inspection daily and before use Monitor approaching storms

Table 5-1 Activity Hazard Analysis

Activity/Work Task: Pressure Washing	Overall Risk Assessment Code (RAC)	**M**
Project Location: RSA-204 Redstone AL	**Risk Assessment Code (RAC) Matrix**	
Contract Number: W91ZLK-09-D-0006		
Date Prepared: July 2015		
Prepared by: James Vigerust/SSHO		
Reviewed by: Doug Russell/HSM		

Severity	**Probability**				
	Frequent	Likely	Occasional	Seldom	Unlikely
Catastrophic	**E**	**E**	**H**	**H**	**M**
Critical	**E**	**H**	**H**	**M**	**L**
Marginal	**H**	**M**	**M**	**L**	**L**
Negligible	**M**	**L**	**L**	**L**	**L**

Notes: (Field Notes, Review Comments, etc.)
Equipment will be decontaminated by washing with pressurized water.

Step 1: Review each **"Hazard"** with identified safety **"Controls"** and determine RAC (See above)

"Probability" is the likelihood to cause an incident, near miss, or accident and identified as: Frequent, Likely, Occasional, Seldom or Unlikely.

"Severity" is the outcome/degree if an incident, near miss, or accident did occur and identified as: Catastrophic, Critical, Marginal, or Negligible

Step 2: Identify the RAC (Probability/Severity) as E, H, M, or L for each "Hazard" on AHA. Annotate the overall highest RAC at the top of AHA.

RAC Chart

- **E = Extremely High Risk**
- **H = High Risk**
- **M = Moderate Risk**
- **L = Low Risk**

Job Steps	Hazards	Controls	RAC
Preparation for Pressure Washing	Musculoskeletal injury from handling heavy objects	• Observe proper lifting techniques • Obey sensible lifting limits (50 lbs. Maximum per person manual lifting) • Use mechanical lifting equipment (hand carts, trucks, forklift) to move large loads, awkward loads	**M**
	Unauthorized access to work area	• The work areas shall be defined by barrier tape, rope or other suitable barriers and be marked with warning signs. The perimeter should be outside of the effective range of the water jet wherever possible.	**M**
	Equipment failure	• Inspect equipment according to manufacturer's specifications • Ensure all fittings and hoses have the correct pressure rating and in good condition • Do not use damaged or defective equipment	**M**
	Lack of communication	• Before starting, the team members shall agree on signals to be used during the operation of the equipment.	**M**

15—AHA—Pressure Washing

Job Steps	Hazards	Controls	RAC
Preparation for Pressure Washing (continued)	Improper use of pressure washing equipment	• All equipment shall be operated consistent with the manufacturer's instructions. • Water jetting equipment shall only be operated by persons who are trained and knowledgeable in the safe operation of the equipment to be used. • The orifice operator must always be able to shut down the water jet by releasing pressure on the trigger, switch or foot valve pedal • Control devices shall be kept in proper working order, and shall not be altered or tampered with. • Equipment shall not be repaired or connections tightened when the unit is in operation or the pump is running. • All pressurized water cleaning operations shall comply with CMS-710-02-PR-07100, Pressurized Water Cleaning and Cutting Operations.	**M**
	Slips, trips, falls	• Use proper stance for sound footing while operating pressure washer • Clear walkways, platforms, access steps and work areas of equipment, tools, and debris • Mark, identify, or barricade tripping hazards • Hose shall be arranged so that tripping hazards to not occur.	**L**
Pressure Washing	Working alone	• A minimum of two persons, one at the pump and one at the orifice or gun, shall be employed at all times.	**M**
	Foot injury from high pressure water jet	• Jetting gun operators shall be protected with waterproof boots with steel toecaps, shanks, and metatarsal guards.	**M**
	Hand injury	• Hand protection shall be used where there is a reasonable probability of injury and if required by the original equipment manufacturers' specifications.	**M**
	Liquid splash, eye, face injury	• Full body PVC raingear or polyethylene coated coveralls shall be worn by pressure washer operators • Orifice operators shall use a full face shield. • Other crew members shall use a of ANSI Z87.1 compliant safety glasses with side shields, goggles or face shield	**M**
	Liquid splash, eye, face injury	• Full body PVC raingear or polyethylene coated coveralls shall be worn by pressure washer operators • Orifice operators shall use a full face shield. • Other crew members shall use a of ANSI Z87.1 compliant safety glasses with side shields, goggles or face shield	**L**
	Noise	• Pressure water jetting operations may produce high noise levels. Use ear protection.	**M**

15—AHA—Pressure Washing

Job Steps	Hazards	Controls	RAC
Pressure Washing (continued)	Heat Stress	• Watch workers for symptoms of heat stress • Allow for adequate break time • Drink plenty of fluids to prevent dehydration	L
Changed or Unanticipated Conditions	Safety or health hazards that may be derived from changed or unanticipated conditions	• Modify the AHA as often as necessary to address new or unanticipated hazards. Use ”Job Safety Analysis” form to facilitate field documentation	L

Equipment to be Used	Training Requirements/Competent or Qualified Personnel name(s)	Inspection Requirements
• Modified Level D: including poly-coated coveralls or PVC raingear, hard hats with attached face shield, Waterproof boots with steel toecaps and shanks and metatarsal guards, hearing protection • Hand Tools • Pressure Washer Unit	• This AHA • Site-specific orientation • Workers must be trained in the safe operation of all assigned equipment • James Vigerust – CP/SSHO	• Inspect all equipment daily prior to use and in accordance with manufacturer’s requirements • Inspect the work area daily for unanticipated hazards • Inspect non-construction equipment and power tools per manufacturer requirements.

Table 5-1 Activity Hazard Analysis

Activity/Work Task: Tank Inspection and Cleaning	Overall Risk Assessment Code (RAC)	**M**
Project Location: RSA-204 Redstone AL	**Risk Assessment Code (RAC) Matrix**	
Contract Number: W91ZLK-09-D-0006		
Date Prepared: July 2015		
Prepared by (Name/Title): James Vigerust/SSHO		
Reviewed by (Name/Title): Doug Russell/HSM		
Notes: (Field Notes, Review Comments, etc.) Inspect and clean storage tanks prior to demobilization.		

Severity	**Probability**				
	Frequent	Likely	Occasional	Seldom	Unlikely
Catastrophic	**E**	**E**	**H**	**H**	**M**
Critical	**E**	**H**	**H**	**M**	**L**
Marginal	**H**	**M**	**M**	**L**	**L**
Negligible	**M**	**L**	**L**	**L**	**L**

Step 1: Review each **"Hazard"** with identified safety **"Controls"** and determine RAC (See above)

"Probability" is the likelihood to cause an incident, near miss, or accident; identified as Frequent, Likely, Occasional, Seldom or Unlikely.

"Severity" is the outcome/degree if an incident, near miss, or accident did occur and identified as: Catastrophic, Critical, Marginal, or Negligible

Step 2: Identify the RAC (Probability/Severity) as E, H, M, or L for each "Hazard" on AHA. Annotate the overall highest RAC at the top of AHA.

RAC Chart
E = Extremely High Risk
H = High Risk
M = Moderate Risk
L = Low Risk

Job Steps	Hazards	Controls	RAC
Assess Site Conditions	Slips, trips, falls	• Clear walkways, platforms, access steps and work areas of equipment, tools, and debris. • Mark, identify, or barricade other obstructions. • Work areas, platforms, and walkways should be kept free of materials, debris, and obstructions such as ice, grease, or oil that could cause a surface to become slick or otherwise hazardous. • Maintain three-point contact when mounting / dismounting heavy equipment. • Maintain good housekeeping	**M**
	Vehicle traffic	• Use spotter when backing. • Survey route to work locations. Inform crew of hazards. • Wear reflective vest when exposed to heavy equipment or traffic.	**M**
	Struck by/against heavy equipment, protruding objects	• Isolate equipment swing area. • Require backup alarms on all heavy equipment. • Make eye contact with operators before approaching equipment. • Understand and review hand signals.	**L**

17—AHA—Tank Inspection and Cleaning

Job Steps	Hazards	Controls	RAC
Assess Site Conditions (continued)	Handling heavy objects	• Observe proper lifting techniques. • Obey sensible lifting limits (60 lbs. maximum per person manual lifting). • Use mechanical lifting equipment (handcarts, trucks, and forklift) to move large loads, awkward loads. • Check and secure drum lids before moving.	**M**
Tank Inspection / Cleaning	Entry into a Permit-Required Confined Space	• All storage tanks will initially be evaluated and classified by the Confined Space Supervisor/ SSHO. • All tank hatch/manways will be opened to allow the space to ventilate • All confined-space entries will be performed in accordance with CB&I Procedure CMS-710-02-PR-01700, *Confined Space Entry.* • The interior of the PRCS will be monitored before entry and continuously during the entry with real-time instruments for explosive atmospheres (lower explosive limit), oxygen content, hydrogen sulfide, and organic vapors. • The lower explosive limit within the PRCS will be maintained at <10% of the LEL and the oxygen (O_2) content maintained at >19.5%, by means of forced air ventilation if needed. • No one will be allowed to enter the tanks until the Confined Space Supervisor has classified the tanks as non-permit required confined spaces. Non-Permit Confined Space means a confined space that does not contain or, with respect to atmospheric hazards, have the potential to contain any hazard capable of causing death or serious physical harm.	**M**
	Exposure to hazardous chemicals/ contaminants	• Workers will don poly-coated coveralls or PVC raingear, safety glasses, face shields, and nitrile gloves during cleaning operations. • Personnel will wash hands, arms, face, and neck after potential exposure to contaminated material.	**L**
	Unplanned influx of hydrant or conditioned water	• Ensure all piping is removed from the tank prior to inspection and cleaning • If piping must remain in place, it will be locked out / tagged out prior to and throughout inspection and cleaning.	**L**

17—AHA—Tank Inspection and Cleaning

Job Steps	Hazards	Controls	RAC
Tank Inspection / Cleaning (continued)	Noise	• All personnel will wear hearing protection (earplugs) whenever the noise level exceeds 85 dB (A-scale as a time-weighted average) or 140-dBA impulse. • Examples of sound levels >85 dB include whenever powered equipment (*e.g.*, compressor or generator) is operating or powered hand tools are used.	**L**
	Poor illumination	• Maintain work area illumination.	**L**
	Heat stress	• Monitor and control heat stress in accordance with APP. • Personnel will drink plenty of water and minimal carbonated or caffeine-containing beverages to prevent dehydration • Personnel will take breaks to cool down as needed. • Workers will implement “buddy” system to ensure nobody suffers heat stress	**M**
	Injury from use of power and hand tools	• All tools will be maintained in good condition with all applicable guards. Tools will be inspected prior to each use. • Extension cords, power tools, and lighting equipment will be inspected before each use, protected from damage, and kept out of wet areas. • Protect electric tools with ground fault circuit interrupters (GFCI). • Use pneumatic or double-insulated power tools when possible. • Damaged tools are immediately tagged ‘out of service’ and not used • Personnel will maintain a steady pace when using tools and take adequate rest periods.	**L**
	Pressure washing	• All personnel will conduct pressure washing activities in accordance with the requirements of the APP • The pressure/steam washer will be inspected before each use in accordance with the manufacturer’s instruction manual. • Personnel will be trained to use the pressure-washing equipment. • Only use the minimum amount of pressure required to complete the job. Pressure washers exceeding 3000 psi will not be used without approval from the Project SHM.	**L**

17—AHA—Tank Inspection and Cleaning

Job Steps	Hazards	Controls	RAC
Tank Inspection / Cleaning (continued)	Pressure washing continued	• CO will be monitored if gas-powered pressure washers are used. CO concentrations will not be allowed to exceed 25 ppm • All personnel working in the work area will be trained in the emergency shut-off procedures for the equipment being used. • The spray from such equipment will only be directed at surfaces to be cleaned and never at body parts or other personnel. • Personnel will use face shields and metatarsal/shin guards. • Personnel will keep a firm grip on the wand and not point it at anything that is not being washed. That operator must maintain good footing. • The trigger on the wand will never be wired/fixed open. • Operators will take adequate breaks to avoid fatigue.	**L**
	Hot work (if required)	• Abrasive blasting (other than pressure washer) is hot work. • The Base Fire Dept and applicable Hot Work Permits will be procured before commencement of any hot work.	**L**
	Shoveling solids	• Use appropriate tool (square shovel) in good condition • Wear leather work gloves; chemical resistant undergloves if required by tank conditions • Observe lifting limits and proper technique to avoid back strain.	**L**
Changed or Unanticipated Conditions	Unplanned safety or health hazards	• Modify the AHA as often as necessary to address new or unanticipated hazards. Use Job Safety Analysis to facilitate field documentation.	**NA**

Equipment to be Used	Training Requirements/Competent or Qualified Personnel name(s)	Inspection Requirements
• Level D: hard hat, safety glasses, safety boots, long pants, long-sleeved shirt • Poly coated Tyvek®, or PVC rainsuits • Face shield and metatarsal guards for pressure washing / abrasive blasting • LEL/Oxygen meter • Pressure washer • Compressor and ventilation if needed	• Tailgate Safety Meeting • AHA review and daily Job Safety Analysis • Hazard Communication • Trained confined space entrant, attendant and supervisor • James Vigerust – CP/SSHO	• Daily inspection of all equipment by competent person • Inspect all tools before use, remove from use any tools that are worn, broken, or inoperable. • Inform base FD of planned confined space entry for rescue purposes.

Table 5-1 Activity Hazard Analysis

Activity/Work Task: Vehicle Operations	Overall Risk Assessment Code (RAC) (Use highest code)	**M**
Project Location: RSA-204 Redstone AL	**Risk Assessment Code (RAC) Matrix**	
Contract Number: W91ZLK-09-D-0006		
Date Prepared: 03/31/2015		
Prepared by (Name/Title): James Vigerust Health and Safety		
Reviewed by (Name/Title): Doug Russell/HSM		
Notes: (Field Notes, Review Comments, etc.)		

Severity	Probability				
	Frequent	Likely	Occasional	Seldom	Unlikely
Catastrophic	E	E	H	H	M
Critical	E	H	H	M	L
Marginal	H	M	M	L	L
Negligible	M	L	L	L	L

Step 1: Review each **"Hazard"** with identified safety **"Controls"** and determine RAC (See above)

"Probability" is the likelihood to cause an incident, near miss, or accident and identified as: Frequent, Likely, Occasional, Seldom, or Unlikely.

"Severity" is the outcome/degree if an incident, near miss, or accident did occur and identified as: Catastrophic, Critical, Marginal, or Negligible

Step 2: Identify the RAC (Probability/Severity) as E, H, M, or L for each "Hazard" on AHA. Annotate the overall highest RAC at the top of AHA.

RAC Chart

- **E = Extremely High Risk**
- **H = High Risk**
- **M = Moderate Risk**
- **L = Low Risk**

Job Steps	Hazards	Controls	EM 385-1-1	RAC
Project vehicle use.	Operation of motor vehicles and trucks-General.	• All company owned, leased, or rented vehicle operations shall comply with CMS-710-02-PR-02700, Non-Commercial Motor Vehicle SafetyAll company owned, leased, or rented commercial vehicle operations shall comply with the requirements of CMS-710-02-PR-03900, Commercial Motor Vehicle Safety • Subcontractors operating motor vehicles shall comply with all federal, state, and local traffic regulations. Subcontractors shall only use vehicles that are in good condition and safe to operate. • All personnel shall drive defensively and wear seat belts while vehicles are in motion.	18.A.01 18.A.02 18.A.03 18.C.02 18.C.03	**M**
	Operation of motor vehicles and trucks-Accidents.	• In the event of an accident: stop; call for medical assistance; notify police; complete Vehicle Accident Report and submit the report to your supervisor. • If a CB&I CFS employee is injured, the CORE Health forms, Return to Work, Medical Release, and Treatment of Injury/Illness must completed at the health clinic or emergency room.	01.D.01	**M**

Job Steps	Hazards	Controls	EM 385-1-1	RAC
Project vehicle use (continued).	Operation of motor vehicles and trucks-Backing.	• Back into parking spaces upon arrival, whenever possible. • When preparing to move or back vehicles at the project site, walk around the vehicle before backing to identify any new conditions or obstructions. • Use a spotter when backing whenever possible, and sound horn prior to backing. • Determine and agree upon hand signals (between spotter and driver) before attempting to back vehicle. • Check the rear-view and side mirrors prior to backing. (Note: All vehicles, other than automobiles, must have small convex mirrors attached to the side mirrors.) • Back slowly in areas of obstructed vision. • Anticipate others who may be backing out into your pathway and adjust accordingly.	18.C.14 08.B.04 08.B.06	**L**
	Operation of motor vehicles and trucks - Unfamiliar with the vehicle.	• Familiarize yourself with the vehicle before moving. • Review the dashboard controls, steering radius, overhead, and side clearances. Locate windshield wipers and lights. • Properly adjust mirrors and seat.		**M**
	Operation of motor vehicles and trucks-Speed.	• Obey all posted speed limits. • Radar detectors are prohibited in all company owned, leased, or rented vehicles. • Reduce travel speed during hazardous conditions (i.e., rain, fog, snow).	08.B.06 18.C.04 18.C.05	**M**
	Operation of motor vehicles and trucks-Spacing/Distance.	• Identify if your vehicle has anti-lock brakes. • Follow the 3-second rule. Increase the 3-second rule as necessary during hazardous travel conditions. • Always leave yourself an “out” during travel – this applies to stoplights as well. • When stopping, make sure that you leave enough distance between you and the car in front of you (you should be able to see the rear tires of the vehicle in front, when stopped). • When at a red light, and it turns green, use the “delayed start” technique, by counting to three before you take your foot off the brake. • DO NOT TAILGATE! • Allow extra spacing and braking time for trucks and vehicles towing trailers. Trailers shall be equipped with brakes.		**M**
	Operation of motor vehicles and trucks-Skids.	• If the vehicle has begun to skid out of control, turn the steering wheel in the direction of the skid and re-adjust the wheel, as necessary. • Slow travel speeds during hazardous travel conditions. • Use 4-wheel drive, if available, when driving vehicles off road, on steep inclines, muddy conditions, etc. • Do not take vehicles “off road” if they cannot be operated safely.	18.C.05	**M**

Job Steps	Hazards	Controls	EM 385-1-1	RAC
Project vehicle use (continued).	Operation of motor vehicles and trucks-Blind Spots.	• Become familiar with blind spots associated with your vehicle. • Adjust mirrors properly. • Make sure you use your directional signals. • Always look over your shoulder to ensure the lane is clear when changing lanes.		**M**
	Operation of motor vehicles and trucks-Cellular phones.	• Exercise caution when approaching other driver's blind spots. • Do not use handheld cellular phones while driving. • Pull over to the side of the road when making a call.	18.C.01	**M**
	Operation of motor vehicles and trucks-Equipment Failure.	• Perform daily inspections of your vehicle. • Any vehicle with mechanical problems that may endanger the safety of the driver, passengers, or the public shall not be used.	18.A.03 18.A.04	**M**
	Operation of motor vehicles and trucks-Spacing/Distance.	• Ensure safety equipment is in the vehicle. Safety equipment should include a spare tire, jack, first-aid kit, fire extinguisher, and flashlight. Flares and/or reflective triangles shall be available in larger trucks. • Verify that the proper documentation is in the vehicle - documentation includes an operations manual for the vehicle, insurance card, vehicle registration, and CB&I Accident forms.	18.A.03	**M**
	Operation of motor vehicles and trucks- Influenced by drug and alcohol.	• Never drive under the influence of drugs or alcohol. Disciplinary action, including termination, will be taken against anyone who is convicted of or who pleads no-contest to the charges of driving under the influence	01.C.02	**M**
	Operation of motor vehicles and trucks-Driver Attitude/Fatigue.	• Do not operate any vehicle when abnormally tired, temporarily disabled, or under the influence of drugs or alcohol. • Keep an even temper when driving. Do not let the actions of others affect your attitude. • Avoid "highway-hypnosis" and "falling asleep at the wheel." Take plenty of breaks when driving long distances. Rotate driving responsibility with your partner. • No employee is authorized to operate a company vehicle (including rentals) after being on-duty for a period of 12-hours. • No employee may drive for more than 10-hours in a single on-duty period.	01.C.04	**M**
	Operation of motor vehicles and trucks-Vehicle Loading.	• DO NOT OVERLOAD the vehicle. • Secure all equipment within the body of the vehicle. • Do not block side view mirrors with load. • Do not transport Department of Transportation manifested hazardous materials without a commercial driver's license. • Dispatch all equipment and personnel with proper forms and identification.	18.C.13 18.C.16	**M**

Equipment to be Used	Training Requirements/Competent or Qualified Personnel Name(s)	Inspection Requirements
Personal Protective Equipment – N/A: Equipment: Seatbelt Spare tire and jack First aid kit Fire extinguisher Flashlight Operations manual for the vehicle Insurance card Vehicle registration Accident report forms	Competent Person (CP) / Qualified Person (QP): James Vigerust – CP/SSHO James Vigerust – QP/First Aid and CPR Training Requirements: Site safety orientation Licensed vehicle operators Defensive driving (all CB&I personnel)	Daily site safety inspection (SSHO) – James Vigerust Daily site safety inspection (QCO) – Vehicle inspections (daily) Vehicle inspections (prior to trips greater than 50 miles for CB&I provided vehicles)

FIGURES

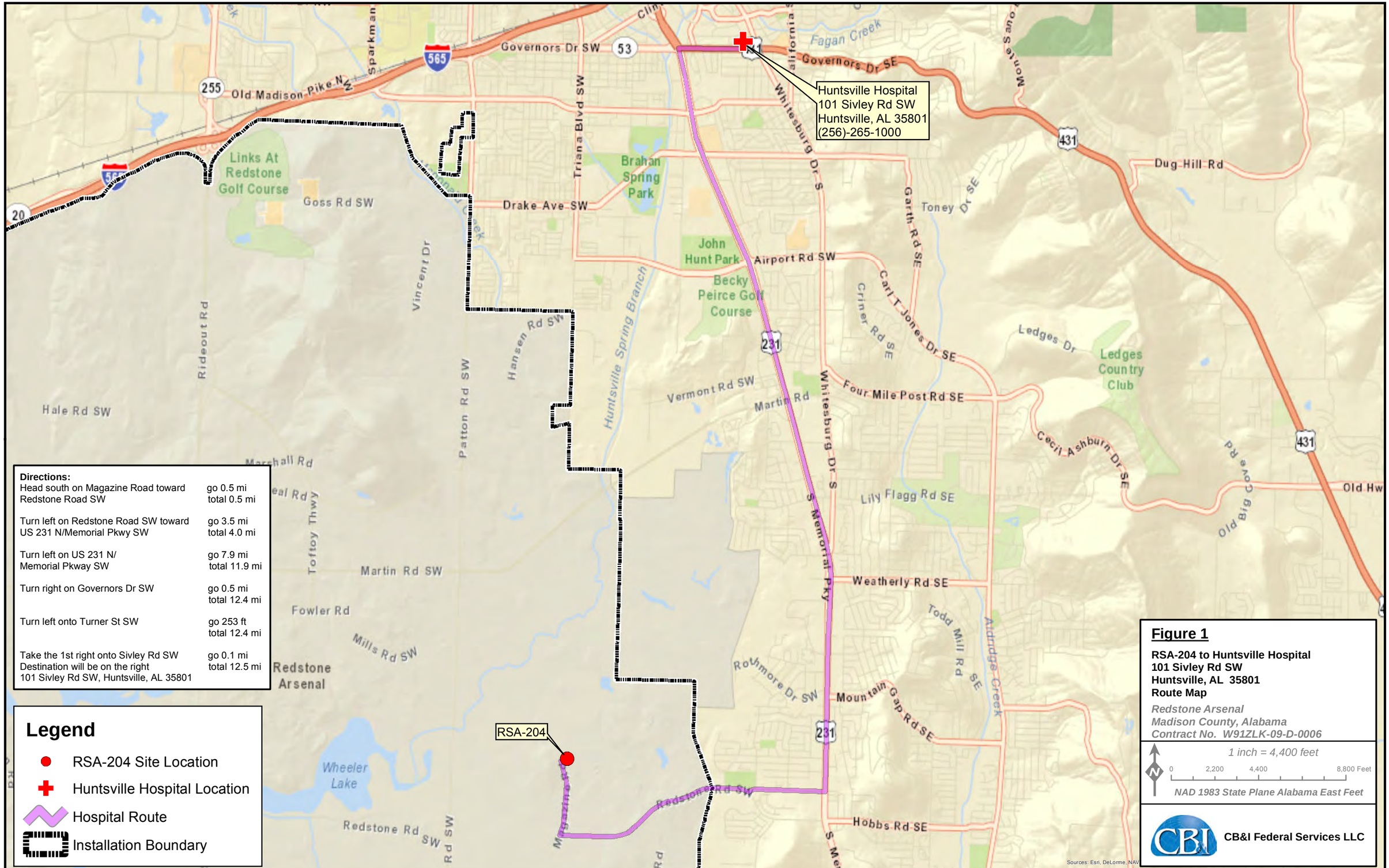

Directions:

Head south on Magazine Road toward Redstone Road SW	go 0.5 mi total 0.5 mi
Turn left on Redstone Road SW toward US 231 N/Memorial Pkwy SW	go 3.5 mi total 4.0 mi
Turn left on US 231 N/ Memorial Pkway SW	go 7.9 mi total 11.9 mi
Turn right on Governors Dr SW	go 0.5 mi total 12.4 mi
Turn left onto Turner St SW	go 253 ft total 12.4 mi
Take the 1st right onto Sivley Rd SW Destination will be on the right 101 Sivley Rd SW, Huntsville, AL 35801	go 0.1 mi total 12.5 mi

Legend

- RSA-204 Site Location
- Huntsville Hospital Location
- Hospital Route
- Installation Boundary

Figure 1

RSA-204 to Huntsville Hospital
101 Sivley Rd SW
Huntsville, AL 35801
Route Map

Redstone Arsenal
Madison County, Alabama
Contract No. W91ZLK-09-D-0006

1 inch = 4,400 feet

0 2,200 4,400 8,800 Feet

NAD 1983 State Plane Alabama East Feet

CB&I Federal Services LLC

H:\Redstone\GIS_Documents\Project_maps\RSA_204\RSA_204_Safety_Plan_Mar2015\RSA_204_Huntsville_Hospital_Location_Map.mxd

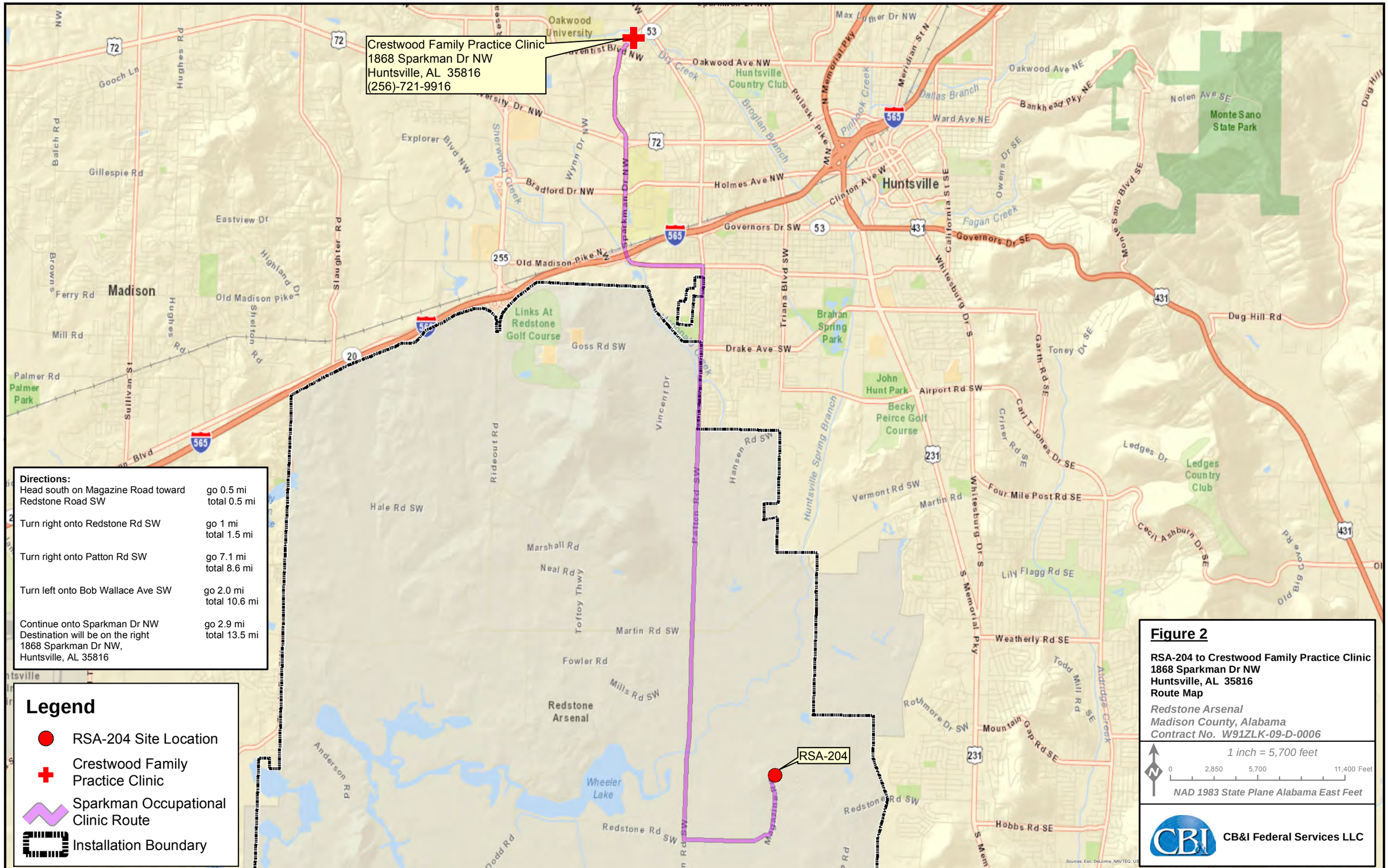

Figure 2

RSA-204 to Crestwood Family Practice Clinic
1868 Sparkman Dr NW
Huntsville, AL 35816
Route Map

Redstone Arsenal
Madison County, Alabama
Contract No. W91ZLK-09-D-0006

1 inch = 5,700 feet

0 2,850 5,700 11,400 Feet

NAD 1983 State Plane Alabama East Feet

CB&I Federal Services LLC

H:\Redstone\GIS_Documents\Project_maps\RSA_204\RSA_204_Safety_Plan_Mar2015\RSA_204_Crestwood_Family_Practice_Clinic_Location_Map.mxd

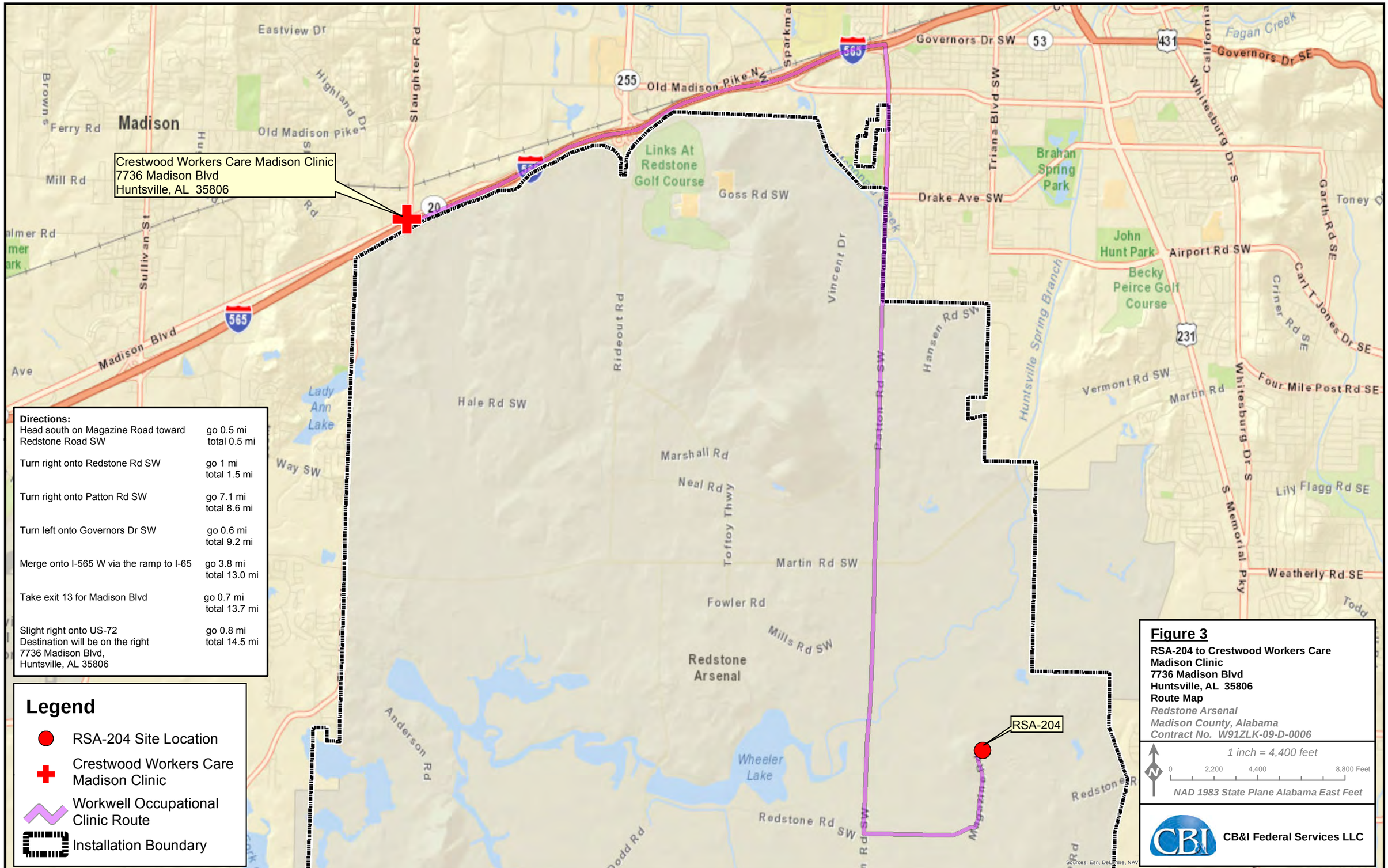

Directions:

Head south on Magazine Road toward Redstone Road SW	go 0.5 mi total 0.5 mi
Turn right onto Redstone Rd SW	go 1 mi total 1.5 mi
Turn right onto Patton Rd SW	go 7.1 mi total 8.6 mi
Turn left onto Governors Dr SW	go 0.6 mi total 9.2 mi
Merge onto I-565 W via the ramp to I-65	go 3.8 mi total 13.0 mi
Take exit 13 for Madison Blvd	go 0.7 mi total 13.7 mi
Slight right onto US-72 Destination will be on the right 7736 Madison Blvd, Huntsville, AL 35806	go 0.8 mi total 14.5 mi

H:\Redstone\GIS_Documents\Project_maps\RSA_204\RSA_204_Safety_Plan_Mar2015\RSA_204_Crestwood_Workers_Care_Madison_Clinc_Location_Map.mxd

ATTACHMENT 1

EVALUATING MEC/CWM/CA HAZARDS IN SUPPORT OF HTRW ACTIVITIES

Evaluating MEC/CWM/CA Hazards in Support of HTRW Activities

OU Number: OU-10 **Date: 10-November-15** **Name of person completing form: Gail Cooley**

Site Name: RSA-204 **Title: Geologist**

Job Number: 147104 **Signature:** Gail L. Cooley

	Yes	No
1a. Have the historical records available for this HTRW site been reviewed?	☒	☐

If the answer to **1a.** is yes, proceed to **1b.**
If the answer to **1a.** is no, review site information prior to completing this form.

	Yes	No
1b. Is there recent information (site walk, worker interviews, etc.) that indicates a potential MEC/CWM hazard at this site?	☐	☒

Proceed to **2**.

2. According to the records review, this site is known or suspected to have been used for:

	Yes	No
2a. Manufacturing, production, or shipping of conventional MEC:	☐	☒
Live fire testing of any ordnance:	☐	☒
Conventional MEC training:	☐	☒
Storage of conventional MEC:	☐	☒
Disposal or demilitarization of conventional MEC:	☐	☒

Other (specify):

	Yes	No
2b. Manufacturing, production, or shipping of chemical agent:	☐	☒
Research or testing of chemical agent:	☐	☒
Chemical agent related training:	☐	☒
Storage of chemical agent:	☐	☒
Disposal or demilitarization of chemical agent:	☐	☒

Other (specify):

Any **2a** question answered "YES" indicates UXO support is required for all site activities. If all **2a** questions are answered "NO", UXO support may not be required. Refer to Installation-Wide Accident Prevention Plan (APP) for additional information concerning UXO support. Proceed to question **2b**.

Any **2b** question answered "YES" requires the remainder of this form to be completed. If all **2b** questions are answered "NO", near real-time monitoring for chemical agent will not be required and completing the remainder of this form is not required. Refer to site-specific safety and health plan (SSHP), for additional information concerning agent monitoring.

Continue to page 2 of 5

OU Number: OU-10 **Site Name: RSA-204**
Job Number: 147104 **Date: 10-November-15**

3. For sites where the manufacturing, testing, storage, or disposal of CWM is suspected:	Yes	No
Is there evidence that the CWM is/was containerized in potentially unexploded ordnance:	☐	☒
Is there evidence that the CWM is/was containerized in nonexplosive containers:	☐	☒
Is there evidence that the CWM is open to the environment (i.e., in an open container or free liquid/solid in the soil/water):	☐	☒
Is there evidence that the CWM hazard has been removed from the site or that the site has been decontaminated:	☐	☒
Has the site been previously monitored or sampled for chemical agent or agent breakdown products:	☐	☒
For any "YES" above, was the agent or breakdown product identified?	☐	☒

For any "Yes", list types of agent (mustard, lewisite, etc.) and the form (in MEC, in drum, etc.) the CWM is expected to be found (or state "unknown"):

Agent:

List agent breakdown products identified:

Continue to page 3 of 5 -

4. Defining the Potential for the Presence of CWM:	**Agent Monitoring Requirements for Site Activities:**
4a. Frequent Presence Potential – Definition: Occurs very often, continuously experienced. CWM is known or to be present at the site in a condition (within MEC and/or nonexplosive container, or in an uncontainerized form in sufficient volume that weathering of the product has not rendered it harmless) that will cause potential harm to personnel if it is encountered.	Mandatory personal and perimeter air monitoring using the DAAMS, MINICAMS, and RTAP collection/analysis methods with off-site surety laboratory confirmation of all environmental samples. Specific monitoring criteria (equipment types and sampling station placement, percentage of personnel monitored, etc.) to be established in the SSHP.
4b. Likely Presence Potential – Definition: Occurs several times. CWM is known or highly suspected to be present at the site in a condition (within MEC and/or nonexplosive container, or in an uncontainerized form in sufficient volume that weathering of the product has not rendered it harmless) that will cause potential harm to personnel if it is encountered.	Mandatory personal and perimeter air monitoring using the DAAMS, MINICAMS, and RTAP collection/analysis methods with off-site surety laboratory confirmation of all environmental samples. Specific monitoring criteria (equipment types and sampling station placement, percentage of personnel monitored, etc.) to be established in the SSHP.
4c. Occasional Presence Potential - Definition: Occurs sporadically. CWM is suspected to have been present at the site, but has been previously removed and/or decontaminated, or has been open to the environment such that it is expected to have degraded and been rendered harmless.	The need for personal and perimeter air monitoring using the DAAMS, MINICAMS, and RTAP collection/analysis methods with off-site surety laboratory confirmation of all environmental samples will be reviewed on a site-by-site basis. Specific monitoring criteria (equipment types and sampling station placement, percentage of personnel monitored, etc.) to be established in the SSHP.
4c. Seldom Presence Potential - Definition: Remotely possible; could occur at some time. CWM is suspected to have been present at the site, but has been previously removed and/or decontaminated, or has been open to the environment such that it is expected to have degraded and been rendered harmless.	The need for personal and perimeter air monitoring using the DAAMS, MINICAMS, and RTAP collection/analysis methods with off-site surety laboratory confirmation of all environmental samples will be reviewed on a site-by-site basis. Specific monitoring criteria (equipment types and sampling station placement, percentage of personnel monitored, etc.) to be established in the SSHP.
4c. Unlikely Presence Potential – Definition: Can assume will not occur, but not impossible. No indications that CWM will be present in quantity or reactivity (in munitions, projectiles, drums, etc.).	No specific personal or area monitoring for chemical agents required beyond what is specified in the SSHP.

Continue to page 4 of 5

5. Based on the information provided in questions 1 through 5, above, the following guidelines will be used for establishing PPE requirements for activities to be performed at this site; Specific details are provided in the SSHP:	
5a. High Exposure Potential - High exposure potential is determined by evaluating the potential presence of CWM in conjunction with the task(s) to be performed, as well as the specific location and duration of the task(s).	Subject to review by the CB&I health and safety manager, PPE for all personnel in the exclusion zone at a site identified as having a "High Exposure Potential" will be Level B (supplied air) or Level C (full-face NIOSH approved CBRN respirator with CBRN cartridges) and chemically resistant coveralls. Specific PPE requirements are in the SSHP for this site.
5b. Moderate Exposure Potential - Moderate exposure potential is determined by evaluating the potential presence of CWM in conjunction with the task(s) to be performed, as well as the specific location and duration of the task(s).	Subject to review by the CB&I health and safety manager, PPE for all personnel in the exclusion zone at a site identified as having a "Moderate Exposure Potential" will be Modified Level D (disposable coveralls and NIOSH approved CBRN escape respirator) carried by all personnel. Specific PPE requirements are in the SSHP for this site.
5c. Low Exposure Potential - Low exposure potential is determined by evaluating the potential presence of CWM in conjunction with the task(s) to be performed, as well as the specific location and duration of the task(s).	Subject to review by the CB&I health and safety manager, no additional PPE requirements above those stated in the SSHP are needed for sites identified as having "Low Exposure Potential." Specific PPE requirements are in the SSHP for this site.

Review of available information indicates the presence potential at this site is considered to be: Unlikely
MEC---- Low Exposure Potential
CWM--- Unlikely Presence Potential / Low Exposure Potential
Exceptions/Explanations: No Exceptions

Review Signatures:
CB&I UXO Technical Manager _____ Date: 10 Nov 2015 CB&I H&S Specialist _____ Date: 10 Nov 2015

Continue to page 5 of 5

Additional Notes and Explanations:

The buildings located within the RSA-204 site and their former functions are described as follows:

Building 7687, Oxidizer Service (Storage) Building. Building 7687 was constructed in 1978 to serve as an oxidizer storage facility. Oxidizers stored in Building 7687 prior to being transported to Buildings 7689, 7690, and 7691 included ammonium perchlorate and sodium chloride. During the 2003 visual site inspection (Shaw, 2005), the concrete floor appeared intact. Features noted at Building 7687 included two loading bay doors on the east and west sides of the building respectively, a drum hoist system, and a shallow drainage ditch running along the south and east sides of the building. Building 7687 is currently under the command of the Aviation and Missile Research, Development, and Engineering Center and is being used for inert materials storage.

Building 7688, Class-1.1 Nitramine Drying Facility. Building 7688 was constructed in 1978 to serve as a Class 1.1 nitramine drying facility. The general procedure for drying consisted of receiving containers of liquid isopropanol saturated octahydro-1,3,5,7-tetranitro-1,3,5,7-tetrazocane (HMX) and Royal Demolition Explosive (RDX). The explosives were removed from the shipping container and air dried for several days. The dried HMX and RDX were then re-containerized and transported to Building 7690 for grinding and processing. HMX, RDX, and isopropyl alcohol are listed as having been used in Building 7688 (Shaw, 2005). Building 7688 is currently under the command of the Aviation and Missile Research, Development, and Engineering Center and used for live explosive work, both attended and remote depending on the program.

Building 7689, Ammonium Perchlorate Grinding Facility. Building 7689 was constructed in 1978 for use as an ammonium perchlorate grinding facility. Ammonium perchlorate is the only chemical listed as having been used in Building 7689 (Shaw, 2005). The general procedure for oxidizer grinding began with receiving ammonium perchlorate from the storage facility (Building 7687). Oxidizers were then screened and ground. This process involved passing the oxidizer through a screen and a magnetic separator immediately prior to entering a grinder or pulverizer to assure removal of extraneous material. Dry oxidizers were ground in impact-type mills to a very fine powder. Dehumidifiers were used in the grinding facilities to enable the ground mixture to remain in a fine powder state. The powder was then containerized and transported to nearby mixing facilities. Building 7689 is currently under the command of the Aviation and Missile Research, Development, and Engineering Center and used for live explosive work, both attended and remote depending on the program.

Building 7690, Nitramine Grinding Facility. Building 7690 was constructed in 1978 for use as a nitramine (HMX/RDX) grinding facility. The general procedure for nitramine grinding began with receiving dried HMX and RDX from the nitramine drying facility (Building 7688). The explosives were then screened and ground. This process involved passing the explosives through a screen and a magnetic separator immediately prior to entering a grinder or pulverizer to assure removal of extraneous material. Dry materials were ground in impact-type mills to a very fine powder. Dehumidifiers were used in the grinding facilities to enable the ground mixture to remain in a fine powder state. The powder was then containerized and transported to nearby mixing facilities. HMX and RDX are the only chemicals listed as having been used in Building 7690 (Shaw, 2005). Building 7690 is currently under the command of the Aviation and Missile Research, Development, and Engineering Center and used for live explosive work, both attended and remote depending on the program.

Building 7691, Ammonium Perchlorate Processing Facility. Building 7691 was constructed in 1978 for use as an ammonium perchlorate processing facility. Oxidizers were processed in Building 7691 after being received from the ammonium perchlorate storage facility (Building 7687). Dry oxidizers were ground in impact type mills to a very fine powder. The process involved passing the oxidizer through a screen and a magnetic separator to remove extraneous material prior to entering the grinder or pulverizer. Dehumidifiers were used in the grinding facilities to enable the ground mixture to remain in a fine powder state. The powder was then containerized and transported to nearby mixing facilities outside of RSA-204. Ammonium perchlorate, petroleum hydrocarbons, and sodium chloride are listed as having been used in Building 7691 (Shaw, 2005). Building 7691 is currently under the command of the Aviation and Missile Research, Development, and Engineering Center and is used for live explosive work, both attended and remote depending on the program.

CB&I proposes to collect subsurface soil samples along the sidewalls of each excavation to confirm the corrective measures achieved the cleanup goal for perchlorate. Additionally, the groundwater will be treated to address the cleanup goals for perchlorate, trichloroethene, and explosive compounds followed by long-term groundwater sampling.

Based on RSA probability maps, exposure potential for CWM is “Unlikely” and for MEC “Low”.

ATTACHMENT 2

MATERIAL SAFETY DATA SHEETS

MATERIAL SAFETY DATA SHEET
DAP—Diammonium Phosphate

1. CHEMICAL PRODUCT AND COMPANY IDENTIFICATION

Product Name:	DAP—Diammonium Phosphate
Chemical Name:	Dibasic Ammonium Phosphate
Chemical Family:	Ammonium Phosphates—Inorganic Salt
Synonyms/Brands:	Ammonium Phosphate Dibasic DAP Fertilizer Grade Ammonium Phosphate 18-46-0
Chemical Formula:	$(NH_4)_2HPO_4$
Primary Use:	Crop nutrient
Responsible Party:	IMC Phosphates 100 South Saunders Road, Suite 300 Lake Forest, IL 60045-2561
Non-Emergency Technical Contact:	8:00 am – 4:00 pm Central Time, Mon - Fri: 800-323-5523 or 847-739-1200

EMERGENCY OVERVIEW

24 Hour Emergency Telephone Number:
For Chemical Emergencies:
Spill, Leak, Fire or Accident
Call CHEMTREC
North America: (800) 424-9300
Others: (703)527-3887 (collect)

Health Hazards:	Eye and skin irritant. Avoid contact with eyes, skin and clothing. Wash thoroughly after handling.
Physical Hazards:	Slippery when wet.
Physical Form:	Solid.
Appearance:	Gray, tan, black granules.
Odor:	Slight ammonia odor.

NFPA HAZARD CLASS		**HMIS HAZARD CLASS**	
Health:	2 (Moderate)	Health:	2 (Moderate)
Flammability:	0 (Least)	Flammability:	0 (Least)
Instability:	0 (Least)	Physical Hazard:	0 (Least)
Special Hazard:	None		

2. COMPOSITION/INFORMATION ON INGREDIENTS

Component	% Weight	Exposure Guideline		
		Limits	Agency	Type
Diammonium Phosphate CAS No. 7783-28-0 (pure dibasic ammonium phosphate)	85-87	NE	OSHA ACGIH	All
Ammonium Nitrate CAS No. 6484-52-2	<1.0	NE	OSHA ACGIH	All
Urea CAS No. 57-13-6	<1.0	NE	OSHA ACGIH	All
Iron, Aluminum and Magnesium Sulfates and Silicates CAS No. (various)	10-12	NE	OSHA ACGIH	All
Fluorides, as F * CAS No. (various)	1.5-2.5	2.5 mg/m^3	OSHA ACGIH	TWA
Sodium and Potassium Salts CAS No. (various)	0.8-1.2	NE	OSHA ACGIH	All
Moisture (Water) CAS No. 7732-18-5	0.5-3	NE	OSHA ACGIH	All

*A biological threshold limit of 2 mg of F/l in urine collected at the end of the work shift is recommended to prevent development of fluorosis. An increase of 1 mg F/l in urine over an 8-hour shift reportedly corresponds to a time-weighted average exposure of 0.5 mg F/m^3.

NE= Not established, but the following particulate limits apply to all inert inorganic dusts.

Particulates Not Otherwise Classified (PNOC)	10 mg/m^3 3 mg/m^3	ACGIH ACGIH	TWA-Inhalable TWA-Respirable
Particulates Not Otherwise Regulated (PNOR)	15 mg/m^3 5 mg/m^3	OSHA OSHA	TWA-Total Dust TWA-Respirable

Note: State, local or other agencies or advisory groups may have established more stringent limits. Consult an industrial hygienist or similar professional, or your local agencies, for further information.

3. HAZARDS IDENTIFICATION

POTENTIAL HEALTH EFFECTS	
Eye:	Eye irritant. Contact may cause stinging, watering, redness and swelling.
Skin:	Skin irritant. Contact may cause redness, itching, burning and skin damage. No harmful effects from skin absorption have been reported.
Inhalation (Breathing):	No information available. Studies by other exposure routes suggest a low degree of hazard by inhalation.
Ingestion (Swallowing):	Low degree of toxicity by ingestion.
Signs and Symptoms:	Effects of overexposure may include irritation of the nose, throat and digestive tract, nausea, vomiting, diarrhea, coughing and shortness of breath.
Cancer:	No data available.
Target Organs:	Inadequate data available for this material.
Developmental:	Inadequate data available for this material.
Other Comments:	Prolonged or repeated overexposure to fluoride compounds may cause fluorosis. Fluorosis is characterized by skeletal changes, consisting of osteosclerosis (hardening or abnormal density of bone) and osteomalacia (softening of bones) and by mottled discoloration of the enamel of teeth if exposure occurs during enamel formation. Symptoms may include bone and joint pain and limited range of motion. This material contains iron compound(s) of unknown composition. Effects of overexposure to dusts can include irritation of the eyes and respiratory tract, pneumoconiosis (dust congested lungs) pneumonitis (lung inflammation), coughing, vomiting, diarrhea, abdominal pain and jaundice.
Pre-Existing Medical Conditions:	Conditions aggravated by exposure may include skin disorders.

4. FIRST AID MEASURES

Eye:	If irritation or redness develops, move victim away from exposure and into fresh air. Flush eyes with clean water for at least 15 minutes. If symptoms persist, seek medical attention.
Skin:	Remove contaminated shoes and clothing, and flush affected area(s) with large amounts of water. If skin surface is damaged, apply a clean dressing and seek medical attention. If skin surface is not damaged. Cleanse affected area(s) thoroughly by washing with mild soap and water. If irritation or redness develops, seek medical attention.
Inhalation (Breathing):	If respiratory symptoms develop, move victim away from source of exposure and into fresh air. If symptoms persist, seek medical attention. If victim is not breathing, clear airway and immediately begin artificial respiration. If breathing difficulties develop, oxygen should be administered by qualified personnel. Seek immediate medical attention.
Ingestion (Swallowing):	First aid is not normally required; however, if swallowed and symptoms develop, seek medical attention. Do not induce vomiting.
Note to Physicians:	No information found.

5. FIRE FIGHTING MEASURES

Flammable Properties:	Flash Point—Not applicable OSHA Flammability Class—Not applicable LEL/UEL—Not applicable Autoignition Temperature—Not applicable
Unusual Fire & Explosion Hazards:	DAP can release toxic and/or irritating ammonia and fluorides when subject to temperatures above 310°F in the presence of water or steam. When dry and heated rapidly, above 310°F, DAP will release ammonia.
Extinguishing Media:	Use extinguishing agent suitable for type of surrounding fire. Avoid excessive water to minimize runoff.
Fire Fighting Instructions:	For fires beyond the incipient stage, emergency responders in the immediate hazard area should wear bunker gear. When the potential hazard is unknown, in enclosed or confined spaces, a self-contained breathing apparatus should be worn. In addition, wear other appropriate protective equipment as conditions warrant (see Section 8). Cool equipment exposed to fire with water, if it can be done with minimal risk. Avoid excessive water to minimize runoff.

6. ACCIDENTAL RELEASE MEASURES

DAP is a crop nutrient and plant food; however, large spills can harm or kill vegetation.

- Stay upwind and away from spill (dust hazard).
- Wear appropriate protective equipment, including respiratory protection, as conditions warrant (see Section 8).
- Prevent spilled material from entering sewers, storm drains, other unauthorized treatment drainage systems, and natural waterways.
- Notify appropriate federal, state, and local agencies as may be required.
- Minimize dust generation.
- Sweep up and package appropriately for disposal.

7. HANDLING AND STORAGE

Handling:	The use of appropriate respiratory protection is advised when concentrations exceed any established exposure limits (see Sections 2 & 8). Wash thoroughly after handling. Wash contaminated clothing/shoes. Use good personal hygiene practices.
Storage:	When possible store this material in cool, dry, well-ventilated areas to protect product quality. Keep container(s) tightly closed. Store only in approved containers, if applicable. Keep away from any incompatible material (see Section 10). Protect container(s) against physical damage.

8. EXPOSURE CONTROLS/PERSONAL PROTECTION

Engineering Controls:	If current ventilation practices are not adequate to maintain airborne concentrations below the established exposure limits (see Section 2), additional ventilation or exhaust systems may be required.

Personal Protective Equipment (PPE)	
Respiratory:	A NIOSH approved air purifying respirator with a type 95 (R or P) particulate filter may be used under conditions where airborne concentrations are expected to exceed exposure limits (see Section 2). Protection provided by air purifying respirators is limited (see manufacturer's respirator selection guide). Use a positive pressure air supplied respirator if there is potential for uncontrolled release, exposure levels are not known, or any other circumstances where air purifying respirators may not provide adequate protection. A respiratory protection program that meets OSHA's 29 CFR 1910.134 and ANSI Z88.2 requirements must be followed if workplace conditions warrant a respirator.

Personal Protective Equipment (PPE)	
Skin:	The use of cloth or leather work gloves is advised to prevent skin contact, possible irritation and absorption (see glove manufacturer literature for information on permeability).
Eye/Face:	Approved eye protection to safeguard against potential eye contact, irritation, or injury is recommended. Depending on conditions of use, a face shield may be necessary.
Other PPE:	A source of clean water should be available in the work area for flushing eyes and skin. Impervious clothing should be worn as needed.

9. PHYSICAL AND CHEMICAL PROPERTIES

Note: Unless otherwise stated, values in this section are determined at 20°C (68°F) and 760 mm Hg (1 atm).

Flash Point:	Not applicable
Flammable/ Explosive Limits (%):	LEL/UEL Not applicable
Autoignition Temperature:	Not applicable
Appearance:	Gray, tan, black granules or powder
Physical State:	Solid
Odor:	Slight ammonia
Molecular Weight of Pure Material:	132.055
pH:	7.4-8.0 in a 1% solution
Vapor Pressure (mm Hg):	0.9 @ 167°F
Vapor Density (air=1):	Not applicable
Boiling Point:	Not applicable
Freezing/Melting Point:	Decomposes at 310°F (155°C before melting)
Solubility in Water:	Very soluble (68-70 g / 100 g)
Specific Gravity:	1.5 – 1.7
Volatility:	Gradually loses up to 8% ammonia during long-term storage
Bulk Density:	58 – 60 lbs/ft^3 (930-960kg/m^3)

10. STABILITY AND REACTIVITY

Chemical Stability:	Stable under normal conditions of storage and handling. Gradually loses up to 8% ammonia during long-term storage. Decomposes at 310°F. Material is hygroscopic (May absorb moisture from air when relative humidity is greater than 82%).
Conditions to Avoid:	Possible violent reaction with magnesium and sodium hypochlorite.
Incompatible Materials:	Avoid contact with alkalis and heat.
Hazardous Decomposition Products:	When heated to decomposition, oxides of phosphorus, oxides of nitrogen (NO, NO_2, NO_x and ammonia (NH_3) vapors are released.
Corrisivity:	Corrosive to iron and mild steels, aluminum, zinc and copper.
Hazardous Polymerization:	Will not occur.

11. TOXICOLOGICAL INFORMATION

Diammonium Phosphate:	LD50 (oral, rat) = 6500 mg/kg, >2 g/kg; Inadequate mutagenicity, target organ or developmental toxicity data located for diammonium phosphate. No carcinogenicity data located for diammonium phosphate.
Iron Compounds/ Target Organ(s):	Chronic exposure to high concentrations of iron have been associated with hemosiderosis, hemochromatosis and in severe cases, liver cirrhosis. Typical occupational exposures to iron compounds are not expected to cause these effects. Chronic inhalation can produce "mottling" of the lungs (siderosis). This is considered a benign pneumoconiosis and does not normally lead to fibrosis or cause significant physiologic impairment.

12. ECOLOGICAL INFORMATION

Ecotoxicity:	May release ammonium ions that are toxic to fish. Unionized ammonia concentrations > 0.02 mg/l are considered toxic in fresh water. May release phosphates which will result in algae growth, increased turbidity, and depleted oxygen. At extremely high concentrations, this may be hazardous to fish or other marine organisms. Release to watercourses may cause effects downstream. LC50 Salmo gairdneri – 160-230 mg/l; LC 50 Pimephales promelas – 300-650 mg/1; LC50 Coho salmon fry = 90-580 mg/l; LC50 Coho salmon fingerling = 1,000->1,500mg/l; LC50 Rainbow trout fry = 150-700 mg/l; LC50 Rainbow trout fingerling = 1,000 mg/l; LC50 Fathead minnow = 940->1,000 mg/l; LC50 Bluegills = > 1,500 mg/l; LC50 Largemouth bass = 1,160->1,500 mg/l
BOD and COD:	No data found.

13. DISPOSAL CONSIDERATIONS

This material, if discarded as produced, is not an RCRA "listed" or "characteristic" hazardous waste. Contamination may subject it to hazardous waste regulations. Properly characterize all waste materials. Consult state and local regulations regarding the proper disposal of this material.

14. TRANSPORT INFORMATION

Hazard Class or Division:	Not listed in the hazardous materials shipping regulations (49 CFR, Table 172.101) by the U.S. Department of Transportation, or in the Transport of Dangerous Goods (TDG) Regulations Canada.

15. REGULATORY INFORMATION

CERCLA:	No
RCRA 261.33:	No
SARA Title III: (Exemptions at 40 CFR, Part 370 may apply for agricultural use, or quantities of less than 10,000 pounds on-site)	SARA 313 List: No
	SARA 311/312- Acute: Yes; Chronic: No; Fire: No; Pressure: No; Reactivity: No
	SARA 302/304 List- No
TSCA:	8(b) Chemical Inventory: Yes; TSCA 8(d): No
CA Proposition 65: (Health & Safety Code Section 25249.5)	Warning: This product contains substances that are known to the State of California to cause cancer and/or reproductive harm.
NTP, IARC, OSHA:	This material has not been identified as a carcinogen by NTP, IARC, or OSHA.
Canada DSL:	Yes
Canada NDSL:	No
WHMIS:	This MSDS has been prepared according to the hazard criteria of the Controlled Product Regulations (CPR) and the MSDS contains all of the information required by the CPR.

16. OTHER INFORMATION

The information in this document is believed to be correct as of the date issued. **HOWEVER, NO WARRANTY OF MERCHANTABILITY, FITNESS FOR ANY PARTICULAR PURPOSE, OR ANY OTHER WARRANTY IS EXPRESSED OR IS TO BE IMPLIED REGARDING THE ACCURACY OR COMPLETENESS OF THIS INFORMATION, THE RESULTS TO BE OBTAINED FROM THE USE OF THIS INFORMATION OR THE PRODUCT, THE SAFETY OF THIS PRODUCT, OR THE HAZARDS RELATED TO ITS USE.** This information and product are furnished on the condition that the person receiving them shall make their own determination as to suitability of the product for their particular purpose and on the condition that they assume the risk of their use thereof.

Health	1
Fire	1
Reactivity	0
Personal Protection	E

Material Safety Data Sheet

Yeast extract MSDS

Section 1: Chemical Product and Company Identification

Product Name: Yeast extract

Catalog Codes: SLY1108

CAS#: 8013-01-2

RTECS: ZF6610000

TSCA: TSCA 8(b) inventory: Yeast extract

CI#: Not available.

Synonym:

Chemical Name: Not available.

Chemical Formula: Not available.

Contact Information:

Sciencelab.com, Inc.
14025 Smith Rd.
Houston, Texas 77396

US Sales: **1-800-901-7247**
International Sales: **1-281-441-4400**

Order Online: ScienceLab.com

CHEMTREC (24HR Emergency Telephone), call: 1-800-424-9300

International CHEMTREC, call: 1-703-527-3887

For non-emergency assistance, call: 1-281-441-4400

Section 2: Composition and Information on Ingredients

Composition:

Name	CAS #	% by Weight
Yeast extract	8013-01-2	100

Toxicological Data on Ingredients: Not applicable.

Section 3: Hazards Identification

Potential Acute Health Effects: Slightly hazardous in case of skin contact (irritant), of eye contact (irritant), of ingestion, of inhalation.

Potential Chronic Health Effects:
Slightly hazardous in case of skin contact (irritant), of eye contact (irritant), of ingestion, of inhalation. CARCINOGENIC EFFECTS: Not available. MUTAGENIC EFFECTS: Not available. TERATOGENIC EFFECTS: Not available. DEVELOPMENTAL TOXICITY: Not available.

Section 4: First Aid Measures

Eye Contact: Immediately flush eyes with running water for at least 15 minutes, keeping eyelids open. Cold water may be used.

Skin Contact:

After contact with skin, wash immediately with plenty of water. Gently and thoroughly wash the contaminated skin with running water and non-abrasive soap. Be particularly careful to clean folds, crevices, creases and groin. Cold water may be used. Cover the irritated skin with an emollient. If irritation persists, seek medical attention. Wash contaminated clothing before reusing.

Serious Skin Contact: Not available.

Inhalation: Allow the victim to rest in a well ventilated area. Seek immediate medical attention.

Serious Inhalation: Not available.

Ingestion:
Do not induce vomiting. Loosen tight clothing such as a collar, tie, belt or waistband. If the victim is not breathing, perform mouth-to-mouth resuscitation. Seek immediate medical attention.

Serious Ingestion: Not available.

Section 5: Fire and Explosion Data

Flammability of the Product: May be combustible at high temperature.

Auto-Ignition Temperature: Not available.

Flash Points: Not available.

Flammable Limits: Not available.

Products of Combustion: Not available.

Fire Hazards in Presence of Various Substances: Not available.

Explosion Hazards in Presence of Various Substances:
Risks of explosion of the product in presence of mechanical impact: Not available. Risks of explosion of the product in presence of static discharge: Not available.

Fire Fighting Media and Instructions:
SMALL FIRE: Use DRY chemical powder. LARGE FIRE: Use water spray, fog or foam. Do not use water jet.

Special Remarks on Fire Hazards: Not available.

Special Remarks on Explosion Hazards: Not available.

Section 6: Accidental Release Measures

Small Spill:
Use appropriate tools to put the spilled solid in a convenient waste disposal container. Finish cleaning by spreading water on the contaminated surface and dispose of according to local and regional authority requirements.

Large Spill:
Use a shovel to put the material into a convenient waste disposal container. Finish cleaning by spreading water on the contaminated surface and allow to evacuate through the sanitary system.

Section 7: Handling and Storage

Precautions:
Keep away from heat. Keep away from sources of ignition. Empty containers pose a fire risk, evaporate the residue under a fume hood. Ground all equipment containing material. Do not breathe dust.

Storage:
Keep container dry. Keep in a cool place. Ground all equipment containing material. Keep container tightly closed. Keep in a cool, well-ventilated place. Combustible materials should be stored away from extreme heat and away from strong oxidizing agents.

Section 8: Exposure Controls/Personal Protection

Engineering Controls:
Use process enclosures, local exhaust ventilation, or other engineering controls to keep airborne levels below recommended exposure limits. If user operations generate dust, fume or mist, use ventilation to keep exposure to airborne contaminants below the exposure limit.

Personal Protection: Safety glasses. Lab coat. Dust respirator. Be sure to use an approved/certified respirator or equivalent. Gloves.

Personal Protection in Case of a Large Spill:
Splash goggles. Full suit. Dust respirator. Boots. Gloves. A self contained breathing apparatus should be used to avoid inhalation of the product. Suggested protective clothing might not be sufficient; consult a specialist BEFORE handling this product.

Exposure Limits: Not available.

Section 9: Physical and Chemical Properties

Physical state and appearance: Solid. (Granular solid.)

Odor: Characteristic.

Taste: Not available.

Molecular Weight: Not available.

Color: Yellowish.

pH (1% soln/water): Not available.

Boiling Point: Not available.

Melting Point: Decomposes.

Critical Temperature: Not available.

Specific Gravity: Not available.

Vapor Pressure: Not applicable.

Vapor Density: Not available.

Volatility: Not available.

Odor Threshold: Not available.

Water/Oil Dist. Coeff.: Not available.

Ionicity (in Water): Not available.

Dispersion Properties: See solubility in water.

Solubility: Easily soluble in cold water.

Section 10: Stability and Reactivity Data

Stability: The product is stable.

Instability Temperature: Not available.

Conditions of Instability: Not available.

Incompatibility with various substances: Not available.

Corrosivity: Non-corrosive in presence of glass.

Special Remarks on Reactivity: Not available.

Special Remarks on Corrosivity: Not available.

Polymerization: No.

Section 11: Toxicological Information

Routes of Entry: Not available.

Toxicity to Animals:
LD50: Not available. LC50: Not available.

Chronic Effects on Humans: Not available.

Other Toxic Effects on Humans: Slightly hazardous in case of skin contact (irritant), of ingestion, of inhalation.

Special Remarks on Toxicity to Animals: Not available.

Special Remarks on Chronic Effects on Humans: Not available.

Special Remarks on other Toxic Effects on Humans: Nuisance dust.

Section 12: Ecological Information

Ecotoxicity: Not available.

BOD5 and COD: Not available.

Products of Biodegradation:
Possibly hazardous short term degradation products are not likely. However, long term degradation products may arise.

Toxicity of the Products of Biodegradation: The products of degradation are more toxic.

Special Remarks on the Products of Biodegradation: Not available.

Section 13: Disposal Considerations

Waste Disposal:

Section 14: Transport Information

DOT Classification: Not a DOT controlled material (United States).

Identification: Not applicable.

Special Provisions for Transport: Not applicable.

Section 15: Other Regulatory Information

Federal and State Regulations: TSCA 8(b) inventory: Yeast extract

Other Regulations: Not available..

Other Classifications:

WHMIS (Canada): Not controlled under WHMIS (Canada).

DSCL (EEC):

This product is not classified according to the EU regulations.

HMIS (U.S.A.):

Health Hazard: 1

Fire Hazard: 1

Reactivity: 0

Personal Protection: E

National Fire Protection Association (U.S.A.):

Health: 1

Flammability: 1

Reactivity: 0

Specific hazard:

Protective Equipment:
Gloves. Lab coat. Dust respirator. Be sure to use an approved/certified respirator or equivalent. Safety glasses.

Section 16: Other Information

References: Not available.

Other Special Considerations: Not available.

Created: 10/10/2005 08:33 PM

Last Updated: 05/21/2013 12:00 PM

The information above is believed to be accurate and represents the best information currently available to us. However, we make no warranty of merchantability or any other warranty, express or implied, with respect to such information, and we assume no liability resulting from its use. Users should make their own investigations to determine the suitability of the information for their particular purposes. In no event shall ScienceLab.com be liable for any claims, losses, or damages of any third party or for lost profits or any special, indirect, incidental, consequential or exemplary damages, howsoever arising, even if ScienceLab.com has been advised of the possibility of such damages.

EOS 450 EOS LS EOS PRO EOS XR

SAFETY DATA SHEET

Section 1: Identification	
Product Name:	**EOS 450, EOS LS, EOS Pro, EOS XR**
Chemical Description:	Mixture; vegetable oil emulsion
Manufacturer:	EOS Remediation 1101 Nowell Road Raleigh, NC 27607 (P): 919-873-2204 www.eosremediation.com
Recommended Use:	Groundwater bioremediation (environmental applications)
Restricted Use:	Not for human consumption.
24-Hour Emergency Contact:	ChemTel: United States (P): 800-255-3924 ChemTel: International (P): 813-248-0585

Section 2: Hazard(s) Identification	
Hazard Classification:	Irritant (skin and eye)
Signal Word:	Warning
Hazard Statement(s):	Potential eye and skin irritant.
Pictograms:	
Precautionary Statement(s):	Not for human consumption. Do not store near excessive heat or oxidizers. Avoid contact with eyes and skin. Wear protective gloves and eye protection.

Section 3: Composition/Information on Ingredients		
Common Name(s)	**CAS NO.**	**% by Weight**
Soybean Oil*	8001-22-7	45-60
Emulsifiers Trade Secret[1,2]	Proprietary	1-10
Soluble Substrates Trade Secret[1,2]	Proprietary	4-8
Organic Substrate Trade Secret[1]	Proprietary	0-10
Food Additives/Preservatives Trade Secret[1]	Proprietary	0.1-1
Nutrients/Extracts Trade Secret[1,2]	Proprietary	0-1
Water	7732-18-5	10-49.9

1 – The precise composition of this product is proprietary information. A more complete disclosure will be provided to a physician in the event of a medical emergency.
2 – The soluble substrates and emulsifiers are generally recognized as safe for food contact.
* - Percentage of soybean oil varies by product.

Section 4: First-Aid Measures	
Routes of Exposure	**Emergency First-Aid Procedures**
Inhalation	Remove to fresh air.
Eye Contact	Flush with water for 15 minutes; if irritation persists see a physician.
Skin Contact	Wash with mild soap and water.
Ingestion	Product is non-toxic. If nausea occurs, induce vomiting and seek medical attention.

Section 5: Fire-Fighting Measures	
Extinguishing Media:	CO_2, foam, dry chemical Note: Water, fog and foam may cause frothing and spattering.
Special Fire Fighting Procedures:	Wear self-contained breathing apparatus and chemical resistant clothing. Use water spray to cool fire exposed containers.
Fire Hazard(s):	Burning will cause oxides of carbon.

Section 6: Accidental Release Measures	
Personal Precautions:	Avoid contact with eyes and skin. Do not consume.
Emergency Procedures:	N/A
Methods & Materials used for Containment:	Compatible granular absorbent
Cleanup Procedures:	Spread compatible granular absorbent over spill area and sweep using broom and pan; dispose in appropriate receptacle. Clean area with water.

Section 7: Handling and Storage	
Safe Handling & Storage:	Do not store near excessive heat or oxidizers.
Other Precautions:	Consumption of food and beverages should be prevented in work area where product is being used. After handling product, always wash hands and face thoroughly with soap and water before eating, drinking, or smoking.

Section 8: Exposure Controls/Personal Protection		
Exposure Limits		
OSHA PEL:	NE	
ACGIH TLV:	NE	
NIOSH REL:	NE	
Personal Protective Measures		
Respiratory Protection:	Not normally required. P95 respirator if aerosols might be generated.	
Hand Protection:	Protective gloves are recommended	
Eye Protection:	Recommended	
Engineering Measures:	Local exhaust ventilation if aerosols are generated	
Hygiene Measures:	Wash promptly with soap & water if skin becomes irritated from contact.	
Other Protection:	Wear appropriate clothing to prevent skin contact.	

Section 9: Physical and Chemical Properties			
Appearance:	White Liquid	Explosive Limits:	NE
Odor:	Vegetable Oil	Vapor Pressure:	NE
Odor Threshold:	NE	Vapor Density:	Heavier than air
pH:	Neutral	Relative Density:	0.96-0.98
Melting Point/Freezing Point:	Liquid at room temperature	Solubility:	Dispersible
Boiling Point:	212°F (100°C)	Partition coefficient:	NE
Flash Point:	>300°F (149°C)	Auto-ignition Temperature:	NE
Evaporation Rate:	NE	Decomposition Temperature:	N/A
Flammability (solid, gas):	NE	Viscosity:	500-1500 cP

NE – Not Established

Section 10: Stability and Reactivity	
Stability:	Stable
Incompatibility:	Strong acids and oxidizers
Hazardous Decomposition Products:	Thermal decomposition may produce oxides of carbon
Hazardous Reactions/Polymerization:	Will not occur
Conditions to Avoid:	None known

Section 11: Toxicological Information		
Likely Routes of Exposure:		Ingestion, dermal and eye contact
Signs and Symptoms of Exposure:		None known
Health Hazards		
	Acute:	Potential eye and skin irritant
	Chronic:	None known
Carcinogenicity		
	NTP:	No
	IARC:	No
	OSHA:	No

Section 12: Ecological Information (non-mandatory)
There is no data on the ecotoxicity of this product.

Section 13: Disposal Considerations (non-mandatory)	
Waste Disposal Methods:	Dispose of according to Federal and local regulations for non-hazardous waste. Recycle, if practical.

Section 14: Transport Information (non-mandatory)
The product is not covered by international regulation on the transport of dangerous goods.
No transport warning required.

Section 15: Regulatory Information (non-mandatory)
N/A

Section 16: Other Information	
Date of Preparation:	29 May 2014
Last Modified Date:	5 September 2014
The information contained herein is based on available data and is believed to be correct. However, EOS Remediation, LLC makes no warranty, expressed or implied, regarding the accuracy of this data or the results to be obtained thereof. This information and product are furnished on the condition that the person receiving them shall make his/her own determination as to the suitability of the product for his/her particular purpose.	

ATTACHMENT 3

CMS-710-02-PR-01610, IDENTIFYING UNDERGROUND INSTALLATIONS

PROCEDURE

Procedure Title:	**Identifying Underground Installations**	**CMS Number:**	**CMS-710-02-PR-01610**
Procedure Owner:	**HSE**	**Issuing Authority:**	**VP Global HSE**

IDENTIFYING UNDERGROUND INSTALLATIONS

1	Issued for Use - Removed hyperlinks from document	LDJ	22 Oct 2014
0	Issued for Use	JPO	10 Dec 2013
Rev	**Changes**	**Approved**	**Date**

"©Chicago Bridge & Iron Company, 2009. All Rights Reserved. For Internal Use Only.
NOTICE: THIS DOCUMENT, AND ALL TEXT, DRAWINGS, DETAILS AND DATA SHOWN HERETO, IS THE SOLE PROPERTY OF CHICAGO BRIDGE & IRON COMPANY, AND SHALL NOT BE REPRODUCED IN ANY MANNER, USED FOR ANY PURPOSE WHATSOEVER, OR RELEASED TO ANYONE EXCEPT BY EXPRESS WRITTEN PERMISSION OF CHICAGO BRIDGE & IRON COMPANY."

1.0 PURPOSE

The purpose of this document is to provide the minimum requirements to ensure that all underground installations are properly identified.

2.0 SCOPE

This procedure applies to all CB&I employees, contractors, subcontractors, vendors, and site visitors where identification of underground installations safety requirements are applicable, any soil disturbance of 12 inches or greater is proposed or planned, and the underground utility locations are not positively identified.

3.0 RESPONSIBILITIES

The following personnel have responsibilities defined in this procedure.

- CB&I Managers
- CB&I Supervisors
- CB&I Employees
- CB&I Contractors
- CB&I Subcontractors
- CB&I Vendors
- CB&I Site Visitors

4.0 PROCEDURE

4.1 Identification

4.1.1 Each state has a One Call, Dig Safe, Miss Dig, etc. dial-in number for requesting mark-out of buried public utilities, such as gas lines, electrical lines, telephone/cable lines, sewer lines, and water lines. Call this number a minimum of 72 hours prior to subsurface activities depending on the particular state the work will be conducted. The One Call Center will notify the local public utilities for a line location mark-out for the particular location. The individual public utilities must locate and mark-out the utilities upon request. In most cases, the markouts will not be performed on private property. A confirmation number is established and confirmation report generated and submitted to the requester.

4.1.2 Once the underground installation has been identified, proper surface marking shall be made in accordance with the guidelines contained within this procedure.

4.2 Surface Markings

4.2.1 Color-coded surface marks (paints or similar coatings) shall be used to indicate the type, location, and route of buried installations. Additionally, to increase visibility, color-coded vertical markers (temporary stakes or flags) shall supplement surface marks.

4.2.2 All marks and markers shall indicate the name, initials, or logo of the company that owns or operates the installation and the width of the installation if it is greater than 2 inches.

4.2.3 If the surface over the buried installation is to be removed, supplemental offset marking shall be used. Offset markings shall be on a uniform alignment and must clearly indicate that the actual installation is a specific distance away.

4.3 Uniform Color-Coding

The American Public Works Association's (APWA's) Utility Location and Coordination Council (ULCC) Uniform Color Codes and corresponding installation type are as follows:

- RED - Electric Power Lines, Cables, Conduit, and Lighting Cables
- YELLOW - Gas, Oil, Steam, Petroleum, or Gaseous Materials
- ORANGE - Communication, Alarm or Signal Lines, Cables, or Conduit
- BLUE - Water, Irrigation, and Slurry Lines.
- GREEN - Sewers and Drain Lines
- WHITE - Proposed Excavation

4.4 Recordkeeping

All information regarding the identification of underground installations shall be transferred to the appropriate drawings and/or prints and shall be available onsite. Drawings and/or prints shall be maintained for the life of the project.

5.0 REFERENCES

None

6.0 TERMINOLOGY

Term	***Definition***
Underground Installation	Where any soil disturbance of 12 inches or greater is proposed or planned and the underground utility locations are not positively identified.

7.0 EXHIBITS

Exhibit 7.1	CMS-720-01-FM-00020 - Business Glossary
Exhibit 7.2	CMS-720-01-FM-00021 - Technical Glossary

8.0 ATTACHMENTS

None

ATTACHMENT 4

CB&I'S INCIDENT REPORTING AND MANAGEMENT PROCEDURE – FEDERAL

CB&I Federal Services LLC Incident Notification, Reporting, and Management Procedure

Directions, Notes, and Reminders

- **Follow this procedure step-by-step for all incidents.**
- **This procedure has limited application to subcontractors. Assist subcontractors with medical emergencies (as applicable) and then immediately notify the Program H&S Manager for guidance.**
- **Periodically review this procedure in order to be familiar with the steps - prior to an incident occurring.**
- **For injuries and vehicle accidents, secure the scene to prevent additional injury/incident, administer on-site first aid, and arrange for emergency assistance prior to making any other notifications.**
- **The Site Supervisor is responsible for making all other notifications to:**
  - **CORE Health Networks (must be notified while employee is en route to medical care facility): 877-EHS-Shaw (or 877-347-7429)**
  - **CB&I Federal Services LLC Help Desk / Hot Line: 866-299-3445**
  - **Project Manager: John Nenni (256) 213-2192 419-420-4623(cell)**
  - **Marcia Musgrave: 419-429-5520**
- **The Site Supervisor (or SSHO) is responsible for notifying the Program H&S Manager or Alternate H&S Manager by telephone prior to making any other notifications (other than calling 911 and CORE).**
- **The Site Supervisor or SSHO shall accompany all injured personnel to the CORE clinic or to the hospital emergency room.**
- **The Project Manager shall notify the Program Manager in person or by telephone no later than two hours after the incident and the U.S. Army Garrison Chief, Installation Restoration Branch (256) 955-6968.**
- **All incident reports shall be completed by typing (when feasible and applicable).**
- **All incident reports shall be submitted (email or fax) to the Program H&S Manager or Alternate H&S Manager for review and distribution.**

Incident Notification, Reporting, and Management Procedure

Action	Who / When	Under what circumstances	How	Notes
1. Notify Site Supervisor for all incidents (no matter how minor)	Injured person, first person recognizing incident, driver/passenger, or employee causing damage *Immediately*	All incidents no matter how minor (including minor cuts, scratches, minor strains/sprains, and insect bites)	In person or by telephone	Site Supervisor to make note of very minor incidents (such as band-aid over scratch) in field logbook
2. For *life-threatening injuries / illnesses* - make scene safe, contact local emergency personnel For *non life-threatening injuries / illnesses* - make scene safe, transport injured person to doctor at an occupational medical facility See Clinic Route Maps and Directions For *vehicle accidents* – make scene safe, notify police, aid injured parties For *equipment / property damage* - make scene safe, prevent further damage or injuries	Site Supervisor *Immediately (concurrently with next step if injury or illness)* Site Supervisor *Immediately (concurrently with next step if injury or illness)* Driver/passenger *Immediately* Employee causing damage *Immediately*	In case of serious injury or illness requiring off-site medical care	Via ambulance Via vehicle	Site Supervisor or Site Safety Officer must immediately go to emergency care facility. Follow post accident alcohol and drug testing procedure. Site Supervisor or Site Safety and Health Officer must transport and stay with injured person until released from care. Make medical personnel aware of CB&I's "restricted work will be provided" and "no prescriptions if possible" policies. CORE clinics are the preferred urgent care facilities when possible, unless injury is severe and victim is transported by ambulance.
3. Notify CORE Health Networks (for injuries / illnesses to CB&I employees only)	Site Supervisor *Immediately, prior to transporting the injured employee, unless injuries are life threatening*	• Serious injury requiring off-site medical care • If employee states that he/she has been exposed to any chemical or biological substance • If illness is work related	CORE Medical 877-347-7429 Note: Outside Continental US call: **225-614-9561**	Not required for temporary agency and subcontractor labor Provide name of injured employee, name and phone # of treating medical facility, description of the incident CORE will help with medical facility coordination and follow-up care
4. Notify Program H&S Manager (if unsure, see contact list) Notify Alternate H&S Manager if Program H&S Manager cannot be contacted. (if unsure, see contact list)	Site Supervisor *Immediately (concurrently with providing transportation to occupational medical facility or EMS transport to hospital)*	All incidents except on-site first aid cases	See Incident Notification and Communication Contact List (attached)	Program H&S Manager will notify H&S Director

Incident Notification, Reporting, and Management Procedure

Action	Who / *When*	Under what circumstances	How	Notes
5. Notify CB&I Federal Services LLC Notification Hotline / Help Desk	Site Supervisor *As soon as possible. Prior to sending an individual for medical treatment*	• Illness and/or injury (doctors cases and above) • Any utility damage • Property damage (damage > $2,500.00) • Vehicle accidents (All) • Criminal activity (i.e. bomb threat, theft) • Natural disaster (all) • Explosion and/or fires (damage > $2,500.00 or result in injury) • Environmental spills/releases (incidents that requires regulatory notification or have an offsite impact) • Regulatory agency visit • Fatalities	CB&INotification Hotline / Help Desk Phone Number: 866-299-3445 Note - Outside the Continental US call: 225-215-5056	Request name of Hotline / Help Desk operator for future reference and note date/time of notification
6. Complete forms: *Injuries and illnesses*: • Authorization for Release of Protected Medical Information • Authorization for Treatment of Occupational Injury/Illness • Return-To-Work Examination Form *and* fax to CORE *and* email or fax to Program H&S Manager	Injured employee and medical facility personnel (Site Supervisor or Site Safety and Health Officer is responsible for verifying forms are completed) *Prior to leaving medical facility*	• Serious injury requiring off-site medical care • If employee states that he/she has been exposed to any chemical or biological substance	Fax to CORE: 225.292.8986 Email or fax to Program H&S Manager	Site Supervisor or Site Safety and Health Officer must take these forms with him/her to occupational medical facility or hospital (Contained in CMS) Contact Program H&S Manager for blank electronic forms or obtain forms from: https://cms.cbi.com/cms/com.cbi.bwpi.Browser/Browser-fs.jsp
7. Call Project Manager and notify of incident (Remind Project Manager of notification responsibilities to Program Manager)	Site Supervisor *As soon as reasonably possible*	If Hot Line / Help Desk notification is required (see # 5 above)	See Incident Notification and Communication Contact List	Project Manager will verbally report incident to upper level of Operations/Business Line Management *As soon as reasonably possible*
8. Notify Marcia Musgrave	Site Supervisor	All incidents involving personnel (injuries, illnesses, vehicle accidents)	419-425-6160	

Incident Notification, Reporting, and Management Procedure

Action	Who / When	Under what circumstances	How	Notes
9. Call back Program H&S Manager to report on status of *injured / ill employee*	Site Supervisor *Prior to employee leaving medical facility*	All injuries and illnesses requiring off-site medical care	See Incident Notification and Communication Contact List (attached)	
10. Complete forms (typed electronically): *OSHA Recordable Cases* • Supervisor's Employee Injury/Illness Report Form • Injured Employee Statement • Witness Statement Form(s) *First Aid Cases (Doctor's)* • Supervisor's Employee Injury/Illness Report • Injured Employee Statement • Witness Statement Form(s) Email or Fax completed forms to Program H&S Manager and CORE	• Site Supervisor • Witnesses *As soon as possible – no later than 24 hours*	All injuries, illnesses, and first aide cases	Email or fax to Program H&S Manager See Incident Notification and Communication Contact List (attached) Fax to CORE 225.292.8986	Site Supervisor should have these forms with him/her at all times (Contained in CMS) Contact Program H&S Manager for blank electronic forms or obtain forms from: https://cms.cbi.com/cms/com.cbi.bwpi.Browser/Browser-fs.jsp
11. Complete forms (typed electronically): *Chargeable Vehicle Accidents* • Vehicle Accident Report • Witness Statement Form(s) • Driving Record Certification (Procedure HS800) *Non-Chargeable Vehicle Accidents* • Vehicle Accident Report • Witness Statement Form(s) *Equipment, Property Damage and General Liability Incidents* • Equipment, Property Damage and General Liability Loss Report • Witness Statement Form(s) Email or Fax completed forms to Program H&S Manager	• Site Supervisor • Witnesses *As soon as possible – no later than 24 hours*	All vehicle accidents and /or all property damage	Email or fax to Program H&S Manager Health See Incident Notification and Communication Contact List (attached)	Supervisor should have these forms with him/her at all times (Contained in CMS) Contact Program H&S Manager for blank electronic forms or obtain forms from: https://cms.cbi.com/cms/com.cbi.bwpi.Browser/Browser-fs.jsp

Incident Notification, Reporting, and Management Procedure

Action	Who / When	Under what circumstances	How	Notes
12. Complete these additional forms (typed electronically): *OSHA Recordable Cases* • Incident Investigation Report *First Aid Cases (Doctor's)* • Incident Investigation Report *Chargeable Vehicle Accidents* • Incident Investigation Report *Non-Chargeable Vehicle Accidents* • Incident Investigation Report *Equipment, Property Damage and General Liability Incidents* • Incident Investigation Report *Near Miss* • Incident Investigation Report • SharePoint electronic Near Miss Report Email or Fax completed forms to Program H&S Manager	Site Supervisor *As soon as possible – no later than 72 hours of incident* *As soon as possible – no later than 96 hours of incident*	Near Misses as defined by HS020 All other Near Misses	Email or fax to Program H&S Manager See Incident Notification and Communication Contact List (attached) Contact Program H&S Manager	Supervisor should have these forms with him/her at all times (Contained in CMS) Contact Program H&S Manager for blank electronic forms or obtain forms from: https://cms.cbi.com/cms/com.cbi.bwpi.Browser/Browser-fs.jsp Do not include any employee or project identification information – *these reports are anonymous*
13. Perform "Accident Review Board" (ARB) as required by CMS - Coordinate through Program H&S Manager Perform "Incident Review Board" (IRB) to extract lessons learned - Coordinate through Program H&S Manager	Program H&S Manager *Within 10 days of incident*	OSHA Recordable Cases Chargeable Vehicle Accidents Doctor's First Aid Cases Utility damage or significant property damage		An IRB is outside of the CMS requirements for an ARB.

CB&I FEDERAL SERVICES INCIDENT NOTIFICATION AND COMMUNICATION CONTACT LIST

Project Number: 500382 Project/Office Name / Location: RSA-194,RSA-198 085 , RSA-199

Name	Phone Number(s)	Fax Number	E-mail
CB&I Notification Hotline/Helpdesk	866-299-3445 225-215-5056 (Outside Continental US)	N/A	N/A
CORE (Must be notified prior to or during transport to medical treatment center)	877-EHS-Shaw-(877-347-7429)	225.292.8986	
CB&I H&S Manager: Doug Russell	865-692-3584 (office) 865-414-9545 (cell)	865-690-3626	winston.russell@cbifederalservices.com
CB&I PMC Program Manager: Don Burton	256-213-2201(office) 865-207-1394 (cell)	256-213-2190	don.burton@cbifederalservices.com
CB&I Project Manager: John Nenni	256-213-2192 (office) 419-420-4623 (cell)	865-690-3626	John.nenni@cbifederalservices.com
CB&I Army Programs Vice President: Bob Culbertson	865-694-7402 (office) 865-719-3293 (cell)	865-690-3626	bob.culbertson@cbifederalservices.com
CB&I Federal E&D H&S Director – Dave Mummert	419-429-5509 (office) 419-348-1544 (cell)	419-425-6039	david.mummert@cbifederalservices.com
CB&I EHQ&S Director – Patrice McEahern	720-554-8289 (office) 303-513-8378 (cell)	303-741-7703	patrice mceahern@cbifederalservices.com

Note: Incident reports shall be faxed or emailed <u>only</u> to the Program H&S Manager (or Alternate H&S Manager) for review and proper distribution.

ATTACHMENT 5

CMS-710-02-PR-07200, DRILL RIG OPERATIONS

PROCEDURE

Procedure Title:	**Drill Rig Operations**	**CMS Number:**	**CMS-710-02-PR-07200**
Procedure Owner:	**Corporate HSE**	**Issuing Authority:**	**VP Global HSE**

DRILL RIG OPERATIONS

0A1	Removed hyperlinks from document	LDJ	23 Oct. 14
0	Issued for Use	JPO	25 Nov 2013
Rev	**Changes**	**Approved**	**Date**

"©Chicago Bridge & Iron Company, 2013. All Rights Reserved. For Internal Use Only.
NOTICE: THIS DOCUMENT, AND ALL TEXT, DRAWINGS, DETAILS AND DATA SHOWN HERETO, IS THE SOLE PROPERTY OF CHICAGO BRIDGE & IRON COMPANY, AND SHALL NOT BE REPRODUCED IN ANY MANNER, USED FOR ANY PURPOSE WHATSOEVER, OR RELEASED TO ANYONE EXCEPT BY EXPRESS WRITTEN PERMISSION OF CHICAGO BRIDGE & IRON COMPANY."

1.0 PURPOSE

This procedure describes the minimum requirements for the safe operation of conventional drilling equipment.

2.0 SCOPE

This procedure applies to all CB&I Sites where the possibility of employee exposure to drill rig hazards exists.

3.0 RESPONSIBILITIES

The following personnel have responsibilities defined in this procedure:

- CB&I Managers
- CB&I Supervisors
- CB&I Employees
- CB&I Contractors
- CB&I Subcontractors
- CB&I Vendors
- CB&I Site Visitors

4.0 PROCEDURE

4.1 Training

All members of drilling crews must possess the required state or local licenses necessary to perform such work. The drill crew must also receive site-specific health and safety training prior to beginning work and must participate in safety meetings. Prior to arriving at a project site, the drilling crew must be familiar with the operation, inspection, safety features, emergency procedures and maintenance requirements of the equipment.

4.2 Inspections

Before being placed into service, the drilling equipment will be inspected by the lead driller in accordance with the manufacturer's guidelines. The CB&I site supervisor will accompany the lead driller during this initial inspection. Inspections shall be documented in the field activity daily log and shall demonstrate that all installed safety equipment is functional prior to beginning work.

4.3 Set Up

4.3.1 The drill rig must be properly blocked and levelled prior to raising the derrick. The wheels which remain on the ground will be chocked and the parking brake set. The rig can only be moved after the derrick has been lowered.

4.3.2 General preparatory drilling requirements include:

4.3.2.1 Before drilling, the existence and location of underground utilities will be determined and marked as defined in CMS-710-02-PR-01610 Identifying Underground Installations.

4.3.2.2 All drilling should occur at a minimum of 5 feet from any known or suspected location of an underground structure or utility.

4.3.2.3 A hand auger or posthole digger must be utilized to positively identify utilities when drilling is anticipated to occur within 5 feet (1.5 m) of an underground utility.

4.3.3 If drilling is conducted in the vicinity of overhead power lines clearance distances must meet the requirements in CMS-710-02-PR-06600 Work Around Overhead Power Lines With Mobile Cranes & Derricks.

4.3.3.1 Work area access must be restricted from vehicular/pedestrian traffic by utilizing temporary fencing or warning tape.

4.3.3.2 If lubrication fittings are not accessible with guards in place, machinery must be stopped and lockout/tagout procedures utilized before oiling and greasing. Refueling and other maintenance operation such as lubrication or refilling hydraulic and oil reservoirs shall not be done unless the drill rig engine has been turned off.

4.3.3.3 Rigging equipment for material handling must be inspected prior to use on each shift and as often as necessary to ensure safe work practices. Defective rigging must be removed from service immediately.

4.3.3.4 Lifting and transporting of drums should be completed using the appropriate equipment and following safe loading and unloading practices.

4.4 Hoisting Operations

4.4.1 Drillers must never engage the rotary clutch without watching the rotary table and ensuring it is clear of personnel and equipment.

4.4.2 Unless the drawworks is equipped with an automatic feed control, the brake must not be left unattended without first being tied down.

4.4.3 Drillers will not add or remove pipe from the drill stem without assistance of the driller's designated helper.

4.4.4 Drill pipe must not be hoisted until the driller verifies that the pipe is latched and the drilling assistant has signalled that he/she may safely hoist the load.

4.4.5 During instances of unusual loading of the derrick or mast, such as when making an unusually hard pull, only the driller will be on the rig floor and no one will be on the rig or derrick.

4.4.6 The brakes on the drawworks of the drilling rig shall be tested at the beginning of each shift to determine that they are in good working order.

4.4.7 A hoisting line with a load imposed will not be permitted to be in direct contact with any derrick member or stationary equipment unless it has been specifically designed for line contact.

4.4.8 Hoisting control stations must be kept clean and controls labelled as to their functions.

4.4.9 Under no circumstances will personnel be permitted to ride the traveling block or elevators, nor will the cat line be used as a personnel carrier.

4.5 Cat Line Operations

4.5.1 Only experienced drillers will be allowed to operate the cathead controls. The kill switch must be clearly labelled and operational prior to operation of the cat line.

4.5.2 The cathead area must be kept free of obstruction and entanglements.

4.5.3 The operator will not use more wraps than necessary to pick up the load. More than one layer of wrapping is not permitted.

4.5.4 Personnel must not stand near, step over, or go under a cable or cat line which is under tension.

4.5.5 Employees rigging loads on cat lines must:

4.5.5.1 Keep out from under the load

4.5.5.2 Keep fingers and feet where they will not be crushed

4.5.5.3 Be sure to signal clearly when the load is being picked

4.5.5.4 Use standard visual signals only, and not depend on shouting to co-workers

4.5.5.5 Make sure that the load is properly rigged, since a sudden jerk in the cat line may shift or drop the load.

4.6 Pipe Handling

4.6.1 Pipe must be loaded and unloaded, layer by layer, with the bottom layer pinned or blocked securely on all four corners. Each successive layer must be effectively blocked or chocked.

4.6.2 Workers will not be permitted to top off the load during loading, unloading, or transferring of pipe or rolling stock.

4.6.3 Employees must be instructed to never attempt to stop rolling pipe or casing. Employees must be instructed to stand clear of rolling pipe.

4.6.4 When pipe is being hoisted, personnel will use a sling to control the bottom end of the pipe.

4.7 Working Near Overhead Energized Lines

4.7.1 Any vehicle or mechanical equipment capable of having parts of its structure elevated near energized overhead lines shall be operated in accordance with the clearance distances stated in CMS-710-02-PR-06600 Work Around Overhead Power Lines With Mobile Cranes & Derricks.

4.7.2 If insulating barriers that are rated for the voltage of the line being guarded are installed to prevent contact with the lines and are not a part of or an attachment to the vehicle or its raised structure, the clearance may be reduced to a distance within the designed working dimensions of the insulating barrier after obtaining Corporate HSE approval.

4.8 Direct Push Sampling

4.8.1 Many subsurface sampling activities are now conducted using a direct push method. This method involves using a hydraulic hammer press to drive hollow steel rods vertically into the subsurface to obtain samples. The hazards associated with the use of this technique are somewhat similar to those of conventional drilling. The main difference is that percussion rather than rotational forces are used to reach sample depths.

5.0 REFERENCES

CMS-710-02-PR-06600	Working Around Overhead Power Lines With Mobile Cranes & Derricks
CMS-710-02-PR-01610	Identifying Underground Installations

6.0 TERMINOLOGY

None

7.0 EXHIBITS

Exhibit 7.1	CMS-720-01-FM-00020 – Business Glossary
Exhibit 7.2	CMS-720-01-FM-00021 – Technical Glossary

8.0 ATTACHMENTS

None

ATTACHMENT 6

CMS-710-02-PR-00600, HEAT STRESS PREVENTION AND CONTROL

PROCEDURE

Procedure Title:	**Heat Stress Prevention and Control**	**CMS Number:**	**CMS-710-01-PR-00600**
Procedure Owner:	**HSE**	**Issuing Authority:**	**VP Global HSE**

HEAT STRESS PREVENTION AND CONTROL

5	Issued for Use – Removed hyperlinks. No change to content. No issuing authority approval required.	CPJ	23 Oct 2014
4	Issued for Use – Updated Procedure based on Project Learning. No change to content. (No Rev Bars)	JPO	17 May 2013
3	Issued for Use – Performed 2 year review. No changes to content. Issuing Authority Approval not required.	RLL	25 Jul 2012
2	Issued for Use – Incorporated consistency review comments (grammatical), Issuing Authority approval not required. (No Rev Bars)	LDH	17 Jun 2010
1	Issued for Use – Revised 1.0, Changed HSSE to HSE & Put in New Template- No Change To Content (No Rev Bars). Issuing Authority Approval not required.	LDH	03 Jun 2010
0	Issued for Use	JPO	01 Jul 2008
Rev	**Changes**	**Approved**	**Date**

"©Chicago Bridge & Iron Company, 2009. All Rights Reserved. For Internal Use Only.
NOTICE: THIS DOCUMENT, AND ALL TEXT, DRAWINGS, DETAILS AND DATA SHOWN HERETO, IS THE SOLE PROPERTY OF CHICAGO BRIDGE & IRON COMPANY, AND SHALL NOT BE REPRODUCED IN ANY MANNER, USED FOR ANY PURPOSE WHATSOEVER, OR RELEASED TO ANYONE EXCEPT BY EXPRESS WRITTEN PERMISSION OF CHICAGO BRIDGE & IRON COMPANY."

1.0 PURPOSE

The purpose of this Procedure is to establish the minimum requirements for Heat Stress Prevention and Control on CB&I sites.

2.0 SCOPE

This procedure applies to all CB&I employees, contractors, subcontractors and visitors associated with a CB&I site.

3.0 RESPONSIBILITIES

The following personnel have responsibilities defined in this procedure:

- CB&I Managers
- CB&I Supervisors
- CB&I Employees
- CB&I Contractors
- CB&I Subcontractors

4.0 PROCEDURE

CB&I sites shall use this procedure to establish the minimum guidelines to create the site specific procedure for heat stress prevention and control.

4.1 Heat Stress

4.1.1 Heat stress is the result of the combination of several factors. The following factors should be evaluated to determine the potential for heat stress.

4.1.1.1 Ambient temperature

4.1.1.2 Humidity

4.1.1.3 Radiant heat source

4.1.1.4 Direct sun exposure

4.1.1.5 Air movement

4.1.1.6 Contact with hot objects

4.1.1.7 Type of work required - heavy, moderate or light work

4.1.1.8 Required work clothing - the potential for heat stress increases as the impermeability of the work clothing increases

4.1.1.9 Employee conditioning and/or acclimatization

4.1.1.10 Previous project experience or history

4.1.1.11 Whenever it is determined that a heat stress environment exists heat stress preventive measures shall be implemented.

4.2 Preventive Measures

4.2.1 Heat stress is the combination of environmental and physical work factors that constitute the total heat load imposed on the body. One of the best ways to reduce heat stress on workers is to minimize the amount of heat in the workplace. However, there are some work environments where heat production is difficult to control, such as active steam lines, high ambient temperature processes, humid work areas, or radiant heat from the sun or a furnace. However, most heat related health problems can be prevented or the risk of developing them reduced. When unacceptable levels of heat stress can potentially occur, there are generally five approaches to a solution:

4.2.1.1 Modify the environment;

4.2.1.2 Modify the clothing or equipment;

4.2.1.3 Modify the work practices;

4.2.1.4 Modify the worker by heat acclimatization;

4.2.1.5 Modify production with a work/rest regiment.

4.2.2 Wearing Personal Protective Equipment (PPE) can place workers at considerable risk of developing heat stress. Health effects range from transient heat fatigue to serious illness or death. Regular monitoring and other preventive precautions shall be employed. For workers wearing semi-permeable or impermeable encapsulating ensembles, workers shall be monitored when the temperature in the work area is above 70ºF (21ºC).

4.2.3 Engineering Controls

4.2.3.1 A variety of engineering controls, including ventilation and spot cooling at points of high heat production, may be helpful. Shielding or insulation may be required as protection from radiant heat sources. Evaporative cooling and mechanical refrigeration are other ways to reduce heat by engineering controls. The use of extra air moving can be added to increase the turnover rate of interior air and remove heat inside enclosures. Cooling fans can increase air velocity and promote evaporation in hot conditions. Shutting down hot process or feed lines is most effective, but equipment modifications, such as using mechanical equipment over manual labor also reduce the exposure.

4.2.3.2 Auxiliary cooling systems can range from simple ice vests, pre-frozen and worn under the clothing, to more complex systems; however, cost of operation and maintenance vary considerably in all of these systems. Four auxiliary cooling systems presently available are:

- Water-cooled garments, such as water-cooled vest, undergarments, hoods, etc., which require a circulating pump, liquid container, and battery;
- Air-cooled garments, such as suits and hoods, that require a vortex tube, connecting hose and a constant source of compressed air;
- Ice pack vest, which although frozen before worn, do not provide continuous regulated cooling and require the use of backup frozen units every 2 to 3 hours; and
- Wetted over-garments, which can be as simple as wet cotton terry cloth coveralls worn over protective clothing; the wetted over garment works best when there is air blowing across the wet garment to increase evaporation.

4.2.4 Work Practices

4.2.4.1 Work practices can help reduce the risk of heat disorders. Making plenty of drinking water (including ice and cool water as appropriate) available at the workplace and urging workers to drink often shall be standard practice in all situations of potential heat stress. In high heat stress environments, an employee can lose as much as one quart of liquid per hour. When possible and especially during acclimatization, products that have been formulated to replace electrolytes and match the weight of the body fluids lost by the sweating process should be used. This is necessary to enable the body to quickly absorb replacement minerals. Do not use salt tablets.

4.2.4.2 Training supervisors to recognize and be able to correctly treat heat stress disorders is absolutely essential. Prospective workers physical conditions should also be considered when determining their fitness for working in a hot environment. Older workers, obese workers, and those workers taking some type of medication are usually at a greater risk.

4.2.5 Acclimatization

4.2.5.1 Acclimatization to heat through short exposures followed by longer periods of work in the hot environment can reduce heat stress. New employees and workers returning from an absence of two weeks or more should have a five-day period of acclimatization. This period should begin with a less than normal workload and time exposure on the first day and gradually build up to normal workload and exposure on the fifth day.

4.2.6 Work/Rest Regimen

4.2.6.1 There are many times when engineering and other controls are not sufficient, and administrative controls must be instituted for worker protection. One effective administrative control is the work/rest regimen that limits the time worked in the hot environment according to the type of work, environmental conditions, and clothing requirements. Work/rest periods are generally conservative because they are:

- Based on calculated approximations of heat stress and
- Designed to protect most workers. As a result, many acclimatized workers can work longer than the allotted time period.

4.2.6.2 Alternating work and rest periods with longer rest periods in a cool area (77°F. or less) can help workers avoid heat strain. Keep in mind that poor physical condition and/or medication will also impair the ability to work in a hot environment. Older, over-weight individuals or those in poor health may not be able to follow average work/rest regimens. Supervisors shall permit employees to take additional rest breaks as needed in potential heat stress conditions.

4.2.6.3 The CB&I HSE Department should be contacted for assistance in instituting work/rest schedules for the site.

4.3 Employee Training

4.3.1 For both employees and supervisory personnel, heat stress training is the key to avoiding problems. Employees must understand the reasons for using appropriate work practices in order for the program to succeed. A heat stress training program for employees shall cover the following:

4.3.1.1 Heat stress, its components and effects,

4.3.1.2 Signs and symptoms of heat disorders,

4.3.1.3 First-aid Practices for and potential health effects of heat stress,

4.3.1.4 Pre-disposing factors to heat stress; drug use, (including therapeutic) and alcohol in a hot work environment,

4.3.1.5 Protective clothing, equipment and its impact in hot environments,

4.3.1.6 Environmental and medical surveillance programs,

4.3.1.7 Importance of maintaining body fluids at normal levels,

4.3.1.8 Various engineering controls to reduce the impact of hot environments,

4.3.1.9 Administrative measures such as work/rest regimens in use to prevent heat stress,

4.3.1.10 Acclimatization; how it is achieved and its limitations, and

4.3.1.11 The components of the heat stress prevention program.

4.4 Flagging System

4.4.1 The status of the Heat Stress and Control plan will be communicated to the work force using a flagging system to correlate with the categories in section 4.5.

4.4.2 As the Heat Index category (color) changes, an SMS and email will go out to the Project team, including field HSE Supervisors or Representatives.

4.4.3 The field HSE Supervisors or Representatives are responsible for changing out the flag to the correct color so the crew can easily identify what category and precautions are in effect.

4.4.4 Flags should be placed in locations which are readily viewable from most areas such as established water, rest, or cooling areas.

4.5 Heat Stress Categories

4.5.1 The severity of heat exposure is determined by the calculated heat index.

4.5.2 The heat index is broken down into five (5) separate level designated by a color code.

4.5.2.1 The five **(5)** levels are green, yellow, orange, red and black. The significance of these colors is discussed in section 4.3.

4.5.3 The heat index is determined by either of three (3) methods:

4.5.3.1 Direct reading instrument such as a weather station, anemometer with built in heat index function, etc.

4.5.3.2 It is recommended for each project to have a direct reading hand held instrument for determining the heat stress, during the summer months. The Kestrel 3000 or equivalent Pocket Weather Meter is a commonly used instrument that is readily available providing a wide range of functions, including accurate relative humidity measurements. A picture of the Kestrel 3000 is shown below in figure 1.

4.5.4

Figure 1

4.5.4.1 Alternatively, calculating the heat index can be accomplished by measuring the ambient temperature and humidity separately to find the corresponding heat index (CMS-710-01-FM-00601).

4.5.4.2 Lastly, obtain the temperature and humidity from a reliable local weather/news source and utilize CMS-710-01-FM-00601 to determine the heat index.

4.5.5 Category precautions and water intake are captured in CMS-710-01-FM-00601 as a guide to be issued to field personnel.

4.6 Category GREEN - Caution

4.6.1 The initial or least severe category is GREEN. Heat indexes in GREEN are 37°C (98.6ºF) or less. When heat indexes fall within this category, the following conditions apply:

4.6.1.1 Heat Syndrome – Fatigue possible with prolonged exposure and physical activity. No significant risk of heat related illnesses.

4.6.1.2 Resting Times – Normal / scheduled break are sufficient during this period.

4.6.1.3 Water Needed – 250 ml (8.5 oz) every 20 – 30 minutes

4.6.1.4 Ensure Adequate Medical Services are available

4.6.1.5 Encourage workers to wear sunscreen

4.7 Category YELLOW – Extreme Caution

4.7.1 The next higher severity category is YELLOW. Heat indexes in YELLOW range between 38°C and 45°C (98.7ºF and 113ºF). When the heat index falls within this category, the following conditions apply:

4.7.1.1 Review Heat related illness topics with workers: how to recognize heat related illnesses, how to prevent it, and what to do if someone gets sick. Monitor workers closely

4.7.1.2 Heat Syndrome – Heat Cramps or Heat Exhaustion possible with prolonged exposure and physical activities.

4.7.1.3 Acclimatize workers

4.7.1.4 Resting Time – 5 minutes per each hour

4.7.1.5 Water Needed – 250ml (8.5 oz) every 20 minutes (average)

4.8 Category ORANGE – Danger

4.8.1 The next higher severity category is ORANGE. Heat indexes in ORANGE range between 46°C and 54°C (114.8ºF and 129.2ºF). When heat indexes fall within this category, the following conditions apply:

4.8.1.1 Limit Physical exertion

4.8.1.2 Adjust work activities

4.8.1.3 Use cooling techniques

4.8.1.4 Watch/communicate with workers at all times

4.8.1.5 Ensure Adequate Medical Services are available

4.8.1.6 Encourage workers to wear sunscreen

4.8.1.7 Heat Syndrome – Heat Cramps or Heat Exhaustion likely. Heat Stroke possible with prolonged exposure and physical activity.

4.8.1.8 Resting Time – 10 minutes per each hour

4.8.1.9 Water Needed – 250 ml (8.5 oz) every 10 minutes (average)

4.9 Category RED – Extreme Danger

4.9.1 The next higher severity category is RED. Heat indexes in RED range between 55°C and 59°C (129.3ºF and 138.2ºF). When heat indexes fall within this category, the following conditions apply:

4.9.1.1 Stop work if essential control methods are inadequate or unavailable.

4.9.1.2 Limit Physical exertion

4.9.1.3 Adjust work activities

4.9.1.4 Use cooling techniques

4.9.1.5 Watch/communicate with workers at all times

4.9.1.6 Ensure Adequate Medical Services are available

4.9.1.7 Encourage workers to wear sunscreen

4.9.1.8 Heat Syndrome – Heat Stroke imminent with following rest and water intake requirements.

4.9.1.9 Resting Time – 15 minutes per each hour

4.9.1.10 Water Needed – 250 ml (8.5 oz) every 10 minutes (average)

4.9.2 During Category RED conditions, the following additional precautions should be implemented:

4.9.2.1 Supervision should be on active alert to monitor their crew for signs and symptoms of heat stress. Maximum supervision should be present, during category R**ED** conditions to monitor the employees and ensure proper rest and water breaks are being followed.

4.9.2.2 Employees who are fasting for whatever reason (i.e. dieting regimen, religious obligations, etc) are not permitted to work during RED flag conditions. There is a significant health risk associated with fasting in RED flag conditions that can quickly progress into Heat Exhaustion or Heat Stroke.

4.9.2.3 Project First Aiders and Nurses should be put on alert in case an employee begins to exhibit heat stress symptoms.

4.9.2.4 Ear type thermometers with disposable covers should be available for monitoring an employee's core body temperature. Employees with core temperatures at or above 38°C (100.4°F) should remain out of the heat, until their temperature is reduced and stabilized.

4.9.2.5 Cold, wet towels must be available for first aid to assist in the cooling of someone experiencing heat stress symptoms. Cold towels applied to the inside of the forearms and neck serves as effective thermal receptors to cool the body's core temperature.

4.9.2.6 Air conditioned shelters are to be made available for anyone experiencing heat stress symptoms.

4.9.2.7 Electrolyte replenishment drink (i.e. Isostar, Pocari Sweat, etc) should be available to first aiders for anyone exhibiting serious signs of heat stress symptoms and / or dehydration.

4.9.2.8 Work involving considerable and / or repetitive climbing should be kept to a minimum.

4.9.2.9 A rescue plan should be in place to retrieve anyone who is not capable of removing themselves, under their own power.

4.10 Category BLACK

4.10.1 All work shall stop when heat index exceeds 59°C (138.3ºF). If the ambient temperature is below 35C (95ºF), regardless of humidity, there will be no BLACK flag.

4.10.2 Dispensation for critical activities can be allowed if approved by Supt, HSE Manager and Project Manager

4.10.3 Any work allowed in BLACK flag conditions must have a specific JSA detailing the precaution to be taken for the activity.

4.11 Technical Assistance

4.11.1 In some situations, we will accept work in extremely hot environments that cannot be controlled or mitigated. When faced with this type of situation, the CB&I Safety Department shall be notified for assistance.

5.0 REFERENCES

CMS-720-01-FM-00020	Business Glossary
CMS-720-01-FM-00021	Technical Glossary

6.0 TERMINOLOGY

Term	***Definition***
Heat Rash	Heat rash, also known as prickly heat, may occur in hot, humid environments where sweat is not easily removed from the surface of the skin by evaporation. This is common when using protective equipment especially impermeable clothing. Heat rash can become uncomfortable when extensive or complicated by infection.
Heat Cramps	Heat cramps, which are painful muscle spasms, are caused when workers fail to replace the body's salt loss that occurs during excessive perspiration (especially with non-acclimatized workers).
Heat Exhaustion	Heat exhaustion results from excessive loss of salt and/or water through sweating. The worker with heat exhaustion still sweats, but experiences extreme fatigue, weakness, giddiness, nausea or headache. The skin is clammy and moist, the complexion pale or flushed and the body temperature normal or slightly higher.
Heat Stroke	Heat stroke, the most serious health problem for workers in hot environments, is caused by the failure of the body's internal mechanism to regulate its core temperature. Sweating stops and the body can no longer rid itself of excess heat. Signs include: mental confusion, delirium, loss of consciousness, convulsions or coma, a body temperature of 105 degrees or higher and hot dry skin which may be red and flushed. Victims of heat stroke may die unless treated promptly and correctly.
Site	Any location, facility or project where CB&I is performing work. Sites may include, but are not limited to, laboratories, offices, shops, owned facilities, leased facilities and/or project sites.

7.0 EXHIBITS

Exhibit 7.1	CMS-710-01-FM-00601 – Heat Stress Index
Exhibit 7.2	CMS-710-01-FM-00602 – Evaporative Cooling Index
Exhibit 7.3	CMS-710-01-FM-00603 – Urine Color Test Chart

8.0 ATTACHMENTS

None

ATTACHMENT 7

CMS-710-02-PR-01600, EXCAVATION AND TRENCHING

PROCEDURE

Procedure Title:	**Excavation and Trenching**	**CMS Number:**	**CMS-710-02-PR-01600**
Procedure Owner:	**HSE**	**Issuing Authority:**	**VP Global HSE**

EXCAVATION AND TRENCHING

6	Issued for Use - Removed hyperlinks from document	LDJ	22 Oct 2014
5	Issued for Use – Added hyperlink and reference to new WI, see section 4.1.3. (See Rev bars.)	JPO	19 Nov 2013
4	Issued for Use – Total re-write. (No Rev Bars)	JPO	20 Jun 2013
3	Issued for Use – Section 4.1.3 and 4.1.4 added for clarification, no change in requirements. Issuing Authority Approval not required. (See Rev Bars)	RLL	22 Jan 2013
2	Issued for Use – Corrected metric conversions. No content change. Issuing Authority Approval not required.	LDH	18 Aug 2011
1	Issued for Use – Revised 1.0 Changed HSSE to HSE & Put In New Template- No Change to Content (No Rev Bars). Issuing Authority Approval not required	LDH	03 Jun 2010
0	Issued for Use	JPO	30 May 2008
Rev	**Changes**	**Approved**	**Date**

"©Chicago Bridge & Iron Company, 2009. All Rights Reserved. For Internal Use Only.
NOTICE: THIS DOCUMENT, AND ALL TEXT, DRAWINGS, DETAILS AND DATA SHOWN HERETO, IS THE SOLE PROPERTY OF CHICAGO BRIDGE & IRON COMPANY, AND SHALL NOT BE REPRODUCED IN ANY MANNER, USED FOR ANY PURPOSE WHATSOEVER, OR RELEASED TO ANYONE EXCEPT BY EXPRESS WRITTEN PERMISSION OF CHICAGO BRIDGE & IRON COMPANY."

1.0 PURPOSE

The purpose of this Procedure is to establish the minimum requirements for the use of Excavation and Trenching on CB&I sites.

2.0 SCOPE

This procedure applies to all CB&I employees, contractors, subcontractors, and visitors associated with a CB&I site.

3.0 RESPONSIBILITIES

The following personnel have responsibilities defined in this procedure:

- CB&I Managers
- CB&I Supervisors
- CB&I Employees
- CB&I Contractors
- CB&I Subcontractors
- CB&I Visitors

4.0 PROCEDURE

This procedure shall establish the minimum requirements for work, activities, inspections, and training, required for work in and around excavation and trenching operations on CB&I sites. This procedure will also apply to all CB&I subcontractors.

4.1 General

4.1.1 A designated Competent Person shall be onsite at all times when excavation activities are conducted.

4.1.2 Before any excavation can be started, an Excavation Permit (CMS-710-02-FM-01601) must be completed by the responsible Superintendent with input from the Authorized Person for underground testing (utility identification) and the Excavation Competent Person. Appropriate Client approval is also necessary where required by Client regulations. Client and/or utility company representatives shall be notified 24 hours prior to beginning excavations.

4.1.3 Underground Storage Tank (UST) Removal

CMS-710-02-WI-01601 contains specific instructions for trenches and excavations relating to UST removal.

4.1.4 Underground Utilities

4.1.4.1 At least 3 feet (0.9144 m) of clearance between any underground utility and the cutting edge or point of powered excavation equipment will be maintained until the precise location of the utility is determined. Initial excavation within this 3 foot area will be conducted manually.

4.1.4.2 All utilities exposed during an excavation will be protected from accidental damage.

4.1.4.3 The underground utilities information obtained shall be provided to affected personnel via the job safety analysis (JSA). Underground utilities information, in relation to proposed excavation work, means the following information about underground essential services that may be affected by the excavation:

- The utilities that may be affected
- The location, including the depth, of any pipes, cables or other plant associated with the affected essential services

- Any conditions on the proposed excavation work.

4.1.4.4 Any essential services information obtained must be readily available for inspection. The information must be available:

- For at least 2 years after the incident occurs
- In every other case, until the excavation work is completed.

4.1.5 The work area around a excavation over 4 feet (1.2 m) deep shall be, so far is reasonably practicable, secured from unauthorized access (including inadvertent entry).

4.1.6 When mobile equipment is operated adjacent to an excavation, and the operator does not have a clear and direct view of the edge of the excavation, a warning system shall be utilized such as barricades, hand or mechanical signals, or stop logs.

4.1.7 Soil classification shall be made by the Competent Person or a registered Professional Engineer trained in soil classification. Unclassified soil shall be assumed to be Class "C" and will be sloped 1½:1 or shored when the excavation exceeds 4 feet (1.2 m) in depth.

4.1.8 Each employee in an excavation shall be protected from cave-ins. Excavations over 4 feet (1.2 m) deep shall be shored, sloped, or benched as required. Excavations and the work scheduled to be performed in the excavation shall be evaluated by the Competent Person to determine if the shoring, sloping, or benching needs to begin at a depth less than 4 feet (1.2 m).

4.1.9 Shoring for excavations over 20 feet deep (6 m) shall be designed by a registered Professional Engineer and shoring installed shall be approved and signed off by a registered Professional Engineer.

4.1.10 Spoils must be placed a minimum of 3 feet (0.9 m) from the edge of the excavation. Loose soil or rocks shall be removed from the sides of excavation walls.

4.1.11 Excavations 4 feet (1.2 m) in depth or greater, shall have a stairway, ladder, ramp, or other safe means of egress within 25 feet (7.6 m) of any employee. Excavations that are less than 4 feet (1.2 m) in depth shall have safe access and egress for all employees with a maximum break in elevation of 19 inches (48.3 cm).

4.1.12 Structural ramps that are used solely by employees as a means of access or egress from excavations shall be designed by a competent person.

4.1.13 Structural ramps used for access or egress of equipment shall be designed by a competent person qualified in structural design, and shall be constructed in accordance with the design.

4.1.14 Excavations shall be inspected by a Competent Person and the results recorded on CMS-710-02-FM-01602 Daily Inspection Form:

4.1.14.1 Prior to entry

4.1.14.2 After rain or snowfall

4.1.14.3 After freezing and/or thawing temperatures occur

4.1.14.4 After any condition that can change the integrity of the soil

4.1.15 During rainy weather, work in excavations shall cease until the Competent Person has evaluated the excavation and the effect of the rain on the excavation. The Competent Person will maintain a regular inspection schedule to ensure the excavation stability and condition during rain events if employees continue to work in the excavation. Depending on the amount of rainfall, the duration of the rainfall and the soil type, the Competent Person may need to maintain continuous observation of the excavation conditions.

4.1.16 For excavations that have the potential for oxygen deficiency or to contain hazardous atmosphere, an atmosphere evaluation shall be performed. This test will be performed by the Construction HSE Manager or their designee. Indications of the potential for a hazardous atmosphere include, but are not limited to: gas lines, sewer lines, areas with hydrocarbons, and proximity to emissions sources for H_2S, SO_2, CO, CO_2 and other gases that are heavier than air. Excavations with hazardous atmospheres should be treated as a confined space.

4.1.17 Excavations shall be evaluated for hazards in addition to cave-in potential and atmospheric hazards. Electrical sources, energized (pressurized) pipes, underground tanks, etc. may also present a hazard to employees who are required to enter an excavation.

4.1.18 The Competent Person responsible for the crew working in the excavation shall inspect the excavation throughout the work period, record the observations on CMS-710-02-FM-01602, and stop operations when unsafe conditions exist.

4.1.19 Water shall not be allowed to accumulate in excavations at any time. Pumps, drains, or other means shall be used to remove water constantly.

4.1.20 Where the stability of adjoining buildings, walls, or other structures is endangered by excavation operations, support systems shall be provided, such as shoring, bracing, or underpinning to ensure the stability of such structures. Excavation below the level of the base or footing of any foundation or retaining wall that could be reasonably expected to pose a hazard to employees shall not be done unless:

- A support system, such as underpinning, is provided to ensure the safety of employees and the stability of the structure;
- The excavation is in stable rock;
- A registered professional engineer has determined that the structure is sufficiently removed from the excavation so that it will be unaffected by the excavation activity; or
- A registered professional engineer has determined that such excavation work will not pose a hazard to employees.

4.1.21 Sidewalks, pavements and appurtenant structures shall not be undermined unless a support system or another method of protection is provided to protect employees from the possible collapse of such structures. The support system shall be capable of withstanding a minimum live load of 125 lb/ft.

4.1.22 Emergency rescue plans shall be developed and rescue equipment shall be readily available.

4.1.23 Employees will not be permitted to work under loads or near digging equipment.

4.1.24 Employees exposed to falls by excavation crossings and walkways will be provided with fall protection in accordance with Procedure CMS-710-02-PR-00900 - Fall Protection.

4.2 Training

4.2.1 Employee Training

4.2.1.1 Each employee who works in or around an excavation shall be trained to recognize potential hazards associated with excavations: cave-in potential, fall hazards, safe entry and exit, proximity to excavating equipment, air quality, back-filling and compacting activities, protective systems, etc. This training shall be documented and records maintained in the Site HSE files

4.2.1.2 Each individual assigned as an Excavation Competent Person shall have documented training or shall have documentation of experience and qualifications in excavation activities.

5.0 REFERENCES

29 CFR (Code of Federal Regulation) 1926.650 - 1926.652	Fall Protection
CMS-710-02-PR-00900	Fall Protection
CMS-710-02-WI-01601	Underground Storage Tank Removal

6.0 TERMINOLOGY

Term	***Definition***
Accepted Engineering Practices	Those requirements that are compatible with standards of practice required by a registered professional engineer.
Authorized Person for Underground Testing	The person(s) designated by the Construction Manager to identify underground utilities using a combination of blue prints and underground testing equipment. This individual shall coordinate excavation activities with the Client (as applicable) and outside utility companies. Several individuals (such as the Piping Superintendent, Electrical Superintendent, Equipment Superintendent, and Field Engineer) may serve as Authorized Persons as necessary.
Benching (Benching system)	A method of protecting employees from cave-ins by excavating the sides of an excavation to form one or a series of horizontal levels or steps, usually with vertical or near-vertical surfaces between levels.
Cave-In	The separation of a mass of soil or rock material from the side of an excavation, or the loss of soil from under a trench shield or support system, and its sudden movement into the excavation, either by falling or sliding, in sufficient quantity so that it could entrap, bury, or other wise injure and immobilize a person.
Competent Person	One who is capable of identifying existing and predictable hazards in the surroundings, or working conditions which are unsanitary, hazardous, or dangerous to employees, and who has authorization to take prompt corrective measures to eliminate them.
Excavation	Any man-made cut, cavity, trench, or depression in an earth surface, formed by earth removal.
Excavation Competent Person	A person capable of identifying existing and predictable hazards in the surroundings or working conditions which are unsanitary, hazardous, or dangerous to employees, and who has authorization to take prompt corrective measures to eliminate them. The Construction Manager and Construction HSE Manager shall designate the Competent Person in writing and their qualifications shall be documented.
Hazardous Atmosphere	An atmosphere which by reason of being explosive, flammable, poisonous, corrosive, oxidizing, irritating, oxygen deficient, toxic, or otherwise harmful, may cause death, illness, or injury.
Protective System	A method of protecting employees from cave-ins, from material that could fall or roll from an excavation face, into an excavation, or from the collapse of adjacent structures. Protective systems include support systems, sloping and benching systems, shield systems, and other systems that provide the necessary protection.

Ramp	An inclined walking or working surface that is used to gain access to one point from another, and is constructed from earth or from structural materials such as steel or wood.
Registered Professional Engineer	A person who is registered as a professional engineer in the state where the work is to be performed. However, a professional engineer, registered in any state is deemed to be a “registered professional engineer” within the meaning of this standard when approving designs for "manufactured protective systems" or “tabulated data” to be used in interstate commerce.
Shoring (Shoring System)	A structure such as a metal hydraulic, mechanical or timber shoring system that supports the sides of an excavation and which is designed to prevent cave-ins.
Site	Any location, facility or project where CB&I is performing work. Sites may include, but are not limited to, laboratories, offices, shops, owned facilities, leased facilities and/or project sites.
Sloping (Sloping System)	A method of protecting employees from cave-ins by excavating to form sides of an excavation that are inclined away from the excavation so as to prevent cave-ins. The angle of incline required to prevent a cave-in varies with differences in such factors as the soil type, environmental conditions of exposure, and application of surcharge loads.
Stable Rock	Natural solid mineral material that can be excavated with vertical sides and will remain intact while exposed. Unstable rock is considered to be stable when the rock material on the side or sides of the excavation is secured against caving-in or movement by rock bolts or by another protective system that has been designed by a registered professional engineer.
Structural Ramp	A ramp built of steel or wood, usually used for vehicle access. Ramps made of soil or rock is not considered structural ramps.
Trench (Trench Excavation)	A narrow excavation (in relation to its length) made below the surface of the ground. In general, the depth is greater than the width, but the width of a trench (measured at the bottom) is not greater than 15 feet (4.6 m). If forms or other structures are installed or constructed in an excavation so as to reduce the dimension measured from the forms or structure to the side of the excavation to 15 feet (4.6 m) or less (measured at the bottom of the excavation), the excavation is also considered to be a trench.

7.0 EXHIBITS

Exhibit 7.1	CMS-710-02-FM-01601 – Excavation Permit
Exhibit 7.2	CMS-710-02-FM-01602 – Daily Excavation Inspection Form
Exhibit 7.3	CMS-720-01-FM-00020 – Business Glossary
Exhibit 7.4	CMS-720-01-FM-00021 – Technical Glossary

8.0 ATTACHMENTS

None

ATTACHMENT 8

CMS-710-02-PR-02100, LIFT PLAN AND RIGGING SAFETY

PROCEDURE

Procedure Title:	**Rigging Plan and Rigging Safety**	**CMS Number:**	**CMS-710-02-PR-02100**
Procedure Owner:	**HSE**	**Issuing Authority:**	**VP Global HSE**

RIGGING PLAN AND RIGGING SAFETY

7	Issued for Use – Removed hyperlinks. Changed document name from Lift and Rigging Safety to Rigging Plan and Rigging Safety to match name in iDocs. No change to content. No Issuing Authority Approval required.	LDJ	22 Oct. 14
6	Issued for Use - Total rewrite, including elements from CMS-710-02-PR-01800 Lift Planning with the intent of eliminating 01800. (No Rev Bars)	JPO	16 May 2014
5	Issued for Use – Performed 2 year review. No change to content. Issuing Authority Approval not required.	SB	09 May 2013
0	Issued for Use	JPO	07 Jan 2009
Rev	**Changes**	**Approved**	**Date**

"©Chicago Bridge & Iron Company, 2009. All Rights Reserved. For Internal Use Only.
NOTICE: THIS DOCUMENT, AND ALL TEXT, DRAWINGS, DETAILS AND DATA SHOWN HERETO, IS THE SOLE PROPERTY OF CHICAGO BRIDGE & IRON COMPANY, AND SHALL NOT BE REPRODUCED IN ANY MANNER, USED FOR ANY PURPOSE WHATSOEVER, OR RELEASED TO ANYONE EXCEPT BY EXPRESS WRITTEN PERMISSION OF CHICAGO BRIDGE & IRON COMPANY."

1.0 PURPOSE

The purpose of this Procedure is to establish the minimum requirements for Lift and Rigging Safety on CB&I sites.

2.0 SCOPE

This procedure applies to all CB&I employees, contractors, subcontractors and visitors associated with a CB&I site.

3.0 RESPONSIBILITIES

The following personnel have responsibilities defined in this procedure:

- CB&I Managers
- CB&I Supervisors
- CB&I Employees
- CB&I Contractors
- CB&I Subcontractors
- CB&I Visitors

4.0 PROCEDURE

Each site shall make every attempt to prevent the possibility of incidents to employees and/or equipment, materials or facilities when performing work activities that require lifting and rigging operations. This is to be accomplished through compliance with safety regulations, training of employees to properly perform their job activities and through employee involvement in rigging safety.

4.1 Responsibilities

4.1.1 Site Manager

4.1.1.1 The Site Manager is responsible for supplying safe equipment, assuring that supervision, riggers, signal persons, and operators are trained and safe operating, inspection, and maintenance policies for rigging equipment are followed.

4.1.1.2 The Site Manager shall ensure that any subcontractor personnel involved with rigging activities have completed the CB&I Basic Rigging Safety Course or equivalent (NCCER and NCCCO are considered approved providers of equivalent training in the US). In addition, subcontractors shall comply with and have access to the CB&I procedures relevant to these activities.

4.1.1.3 The Site Manager shall assign the responsibility of preparing and monitoring the Lift and Rigging Plan to a specific individual in charge of lifting operations (“Lift Supervisor”).

4.1.1.4 The responsible Site Managers shall know and comply with all applicable safety regulations as well as CB&I procedures.

4.1.2 Competent Person

CB&I requires that a Qualified and Competent Person be responsible for all lift and rigging activities and inspection of rigging equipment.

4.1.2.1 Employees who successfully complete the CB&I Basic Rigging Course are deemed qualified and may be designated as a competent person for rigging.

4.1.2.2 Subcontractors are responsible for assigning qualified and competent personnel.

4.1.3 Lift Supervisor

4.1.3.1 This person shall be a competent person and shall be responsible for the safe handling and rigging of loads.

4.1.4 Riggers shall:

4.1.4.1 Be trained as required in this procedure.

4.1.4.2 Know and never exceed the safe working load of the equipment and tackle to be used.

4.1.4.3 Confirm the capacity of the rigging equipment to be utilized is sufficient to support the intended load.

4.1.4.4 Confirm the weight of the load block, crane deductions and material handling devices have been included when calculating the total weight of the load.

4.1.4.5 Inspect all hardware, equipment, tackle and slings before using.

4.1.4.6 Report unsafe or unsuitable slings or lifting gear to the job supervisor.

4.1.4.7 Be trained, qualified, and competent in directing the crane / load movement if acting as the designated signal person.

4.2 Lift and Rigging Plans

4.2.1 Every load handling activity by CB&I shall have a lift plan. Some lift plans may be unwritten or informal (e.g. Routine Lifts), while others must be a formal, written plan (e.g. Critical Lift Plans). The type of plan and level of review and approval depends on the risks associated with the planned load handling activities. The Site Manager and the responsible HSE Manager shall determine the level of risk and implement the planning and approval levels required. The Site Manager may delegate these activities to a CB&I Qualified Person, but shall continue to be responsible for the lifts done under his management.

- These planning and approvals shall be documented in a site specific work instruction.

4.2.2 All lift and rigging planning shall be done in accordance with CMS-830-17-PR-60001 Lift, Rigging and Transport Plans. The risk categories below are defined in CMS-830-17-PR-60001.

Category	Participation in Planning Process
Critical Lifts – 4	CCT – Required Site Manager or designated Qualified Person - Required HSE – Required
Moderate Risk Lifts – 3	CCT – Recommended Site Manager or designated Qualified Person - Required HSE – Required
Low Risk Lifts – 2	Site Manager or designated Qualified Person – Required Competent Person - Required HSE – Recommended

Documented Routine Lifts - 1	Competent Person – Required HSE – Recommended
Non-Documented Routine Lifts - 0	Competent Person – Required

4.2.3 Lift and Rigging Plans shall be reviewed and approved in accordance with CMS-830-17-PR-60001 Lift, Rigging and Transport Plans.

4.2.4 If the Lift and Rigging Plan requires CCT participation as defined in CMS-830-17-PR-60001 Lift, Rigging and Transport Plans, the Site Manager or the designated qualified person shall submit the plan to CCT for review.

4.3 Pre-lift Meeting

4.3.1 Once the approval process has been completed, the Lift Supervisor or Competent Person shall hold a meeting to review the Lift and Rigging Plan with personnel associated with, or affected by, the lift. The Lift and Rigging Plan package shall be reviewed with each attendee.

- The contents of this package shall be determined by the Site Manager, or designated Qualified Person and based on the complexity of the lift.

4.3.2 The Lift Supervisor or Competent Person shall confirm that equipment operators and riggers involved with the lift are competent and capable of performing the tasks they are assigned.

4.3.3 Immediately before the lift is initiated, the Lift Supervisor or Competent Person shall confirm that the required components of the Lift and Rigging Plan are in place.

4.3.4 The Lift Supervisor shall have load tests and practice lifts performed as required by the approved Lift and Rigging Plan.

4.3.5 The operator shall monitor and complete the lift as described in the Lift and Rigging Plan.

4.3.6 Upon completion of the lift, the original Lift Plan is to be placed in the project file..

4.4 Rigging Practices

4.4.1 The capacity of a sling is determined by its size, construction, and type of hitch, diameters and bearing areas of rigging hardware.

4.4.2 Slings shall not be shortened with knots, bolts, or other makeshift devices.

4.4.3 Sling legs shall not be kinked, knotted or twisted.

4.4.4 Slings shall be rigged in manner that provides control of the load.

4.4.5 All loads shall be properly rigged in a manner to prevent dislodgement of any part of the load.

4.4.6 Hands or fingers shall not be placed between the sling and its load during hoisting or load handling operations.

4.4.7 Do not choke wire rope slings in a manner that allows the ferrule (used to form the sling eye) to bear on a sharp corner.

4.4.8 If in contact with corners or sharp edges, slings shall be suitably padded or protected by the use of softeners.

- Sling softeners are devices used to increase the radius (D/d ratio) at corners or edges, to protect a sling from damage during a lift.

4.4.9 Choke hitches should be formed using an anchor shackle (screw pin or bolt type). The shackle pin shall be placed in the sling eye to prevent pin rotation.

4.4.10 The choker hitch shall not be “beaten down” after tension is applied. This causes a reduction in sling capacity (See page 2 of CMS-830-17-FM-60003, CMS-830-17-FM-60004, or CMS-830-17-FM-60005 for examples of capacity reduction in choke hitches based on the angle of choke).

4.4.11 Slings used in a basket hitch shall have the load balanced to prevent slippage. A double wrapped basket hitch is a good practice in this application.

4.4.12 When using two-leg bridle slings to lift loads where one end is heavier than the other (offset CG), the slings shall be sized according to the sling tension of the most heavily loaded leg.

4.4.13 Rule of thumb-When using 3 or more leg bridle sling configurations, any 2 legs should be capable of supporting the entire load.

Note: For multi-point rigging arrangements, load geometry or rigging arrangement must ensure that no leg will be loaded beyond its rated capacity.

4.4.14 Secure all unused legs of multi-leg slings before executing a lift.

4.4.15 Keeping boom deflection in mind, the hook should be positioned such that the CG of the load is directly under the hook when the load is lifted.

4.4.16 Rigging gear shall be configured so that the hook will be over the load CG when the load is freely suspended.

4.4.17 Multiple part hoist lines shall not be twisted around each other.

4.4.18 Ensure no conditions exist that would prevent the load from being lifted.

4.4.19 Take appropriate measures to prevent shock loading of rigging and lifting equipment.

4.4.20 Suspended loads, rigging tackle and hoisting equipment shall not be allowed to foul on adjacent equipment, material stockpiles, etc.

4.4.21 All employees shall be kept clear of loads.

4.4.22 Never ride on a load.

4.4.23 Never work under a suspended load.

1. The load shall be landed on adequate supports and secured before work beneath the load begins.
2. Any means of load support shall be capable of supporting the entire load without assistance of the crane or hoist.
3. All conditions shall be reviewed and approved by the supervisor in charge of the operation. Adequate support includes:
   a. Resting on suitable structure, cribbing or supports
   b. Properly sized and installed wire, natural fiber or synthetic fiber rope lashing.

Note: Singular wires are prohibited from use for supporting a suspended load (e.g. #9, rebar tie wire or electrical wire).

4.4.24 Use tag lines or push-pull poles to prevent hazardous rotation or movement of the load.

4.4.25 Tag lines shall not be used in situations that may jeopardize the safety of the lift or personnel.

4.4.26 Knots in the body of the tag line are prohibited (This does not include the means of attachment to the load).

4.4.27 Personnel handling tag lines shall have a clear path of travel while tending the line.

4.4.28 Tag lines shall not be looped or wrapped around any body part of personnel.

4.4.29 Never allow a load to rest on rigging components; use adequate blocking to prevent damage to this equipment.

4.4.30 Loads must be safely landed and properly blocked before attempting to remove rigging.

4.4.31 Use of fiber (Natural or synthetic) rope slings is prohibited.

4.4.32 Rigging equipment not in use shall be removed from the immediate work area so as not to present a hazard to employees or damage to the equipment. All rigging equipment shall be stored in accordance with Construction Manual 62.

4.5 Rigging Equipment

Additional requirements for rigging equipment can be found in ASME, OSHA (Federal and State), CB&I Construction Manual 62, and manufacturers' recommendations.

Some states, clients and many countries have unique regulations pertaining to rigging equipment. To ensure compliance in these instances, a site or region specific work instruction or guideline shall be developed.

Note: CB&I uses OSHA and ASME standards worldwide as minimum requirements.

4.5.1 Rigging equipment includes but is not limited to:

- Slings and shackles.
- Lifting beams and spreader bars.
- Manual hoists.
- Plate and beam clamps.
- Detachable rigging hardware.

4.5.2 All rigging equipment shall be marked per the requirements in the appropriate volume of ASME B30. Marking at a minimum will identify the manufacturer and rated load or size. Rated load may be indicated by Safe Working Load (SWL) or Working Load Limit (WLL). For additional details on marking requirements for a more commonly used rigging equipment see Construction Manual 62.

4.5.3 Rigging equipment shall not be loaded in excess of its rated load, with the exception of any required proof testing.

4.5.4 CCT review and approval is required for all custom rigging equipment built by CB&I.

4.5.4.1 Special custom designed lifting devices that are temporarily attached to the load solely for lifting purposes (e.g., bolt on lifting lugs, bolt on lifting beams, etc.,) shall have an engineering design and be load tested to 125% of rated capacity. Load testing is not required for lifting attachment points that are part of, or welded to the load (e.g., lift lugs, lifting eyes, trunnions, etc.).

4.5.5 Wire Rope Slings

4.5.5.1 All wire rope slings used shall be manufactured with Flemish eyes with pressed on steel ferrules.

4.5.5.2 The use of slings created with wire rope clips is prohibited.

4.5.5.3 The manufacturer shall provide a tag on each wire rope sling. The following information shall be legible on the tag:

- Name or trademark of manufacturer
- Rated load for at least one hitch type and the angle upon which it is based
- Diameter or size
- Number of legs, if more than one

4.5.6 Chain Slings

4.5.6.1 The Site Manager shall approve of the use of chain slings prior to their use at the site. In addition, the Site Manager shall ensure that chain sling usage complies with the requirements of this procedure, Construction Manual 62 as well as all local regulations that may apply.

4.5.6.2 Alloy steel chain slings shall not be used for loads in excess of the rated capacity shown on the sling identification tag. All slings shall be used in accordance with the manufacturer's recommendations.

4.5.6.3 Alloy steel chain slings shall have permanently affixed durable identification stating:

- Name or trademark of manufacturer
- Grade
- Nominal chain size
- Number of legs
- Rated loads for at least one hitch type and the angle upon which it is based
- Length (reach)
- Individual sling identification (e.g., serial numbers)

4.5.6.4 All chain slings used for overhead lifting shall be grade 80 (8) or higher alloy chain.

4.5.6.5 Hooks, rings, oblong links, pear shaped links, welded or mechanical coupling links or other attachments shall have a rated capacity at least equal to that of the alloy steel chain with which they are used or the sling shall not be used in excess of the rated capacity of the weakest component.

4.5.6.6 Makeshift links or fasteners formed from bolts or rods, or other such attachments, shall not be used. Any special devices needed shall be designed and approved by CCT and proof tested to verify suitability.

4.5.6.7 Normal operating temperature is -40°F to 400°F.

- When exposed to service temperatures in excess of 400°F, maximum working load limits shall be reduced in accordance with the chain or sling manufacturer's recommendations. Alloy steel chain slings shall be permanently removed from service if they are heated above 1000°F.

4.5.6.8 When using chain slings the following precautions shall be followed:

- Always use softeners on sharp corners.
- Avoid shock loads.
- Do not point-load the hooks.

4.5.7 Synthetic Web and Round Slings

4.5.7.1 The major hazard associated with synthetic slings is that a square (not necessarily sharp) corner can cut the sling under load. This is especially true if there is any movement of the piece against the sling. Lifts with corners no sharper than those on an I-beam can and have cut synthetic slings in half. For that reason, CB&I does not allow the use of any type of synthetic sling for lifting of structural steel members (beams, channels and angles).

- Any deviation from this directive shall be requested in writing to Corporate Construction Technology. These requests will be evaluated on a case by case basis.

4.5.7.2 The manufacturer shall provide a tag on each synthetic web sling. The following information shall be legible on the tag:

- Name or trademark of manufacturer
- Manufacturer's stock or code number
- The rated load for one hitch type and the angle upon which it is based
- The type of synthetic material
-
- Number of legs if more than one

4.5.7.3 The manufacturer shall provide a tag on each synthetic round sling. The following information shall be legible on the tag:

- Name or trademark of manufacturer
- Manufacturer's code or stock number
- Rated load for at least one hitch type and the angle upon which it is based
- Core material
- Cover material, if different from core material
- Number of legs, if more than one

4.5.8 Metal Mesh Slings

4.5.8.1 The manufacturer shall provide a tag on each metal mesh sling. The following information shall be legible on the tag:

- The manufacturer's name or identification trademark,
- The rated capacity for at least one hitch type , and the angle upon which it is based
- Width and gauge
- Number of legs, if more than one
- Individual sling identification (e.g. serial number)

4.5.9 Compression Hardware

4.5.9.1 Wedge and Sockets

Each wedge socket body and wedge shall have forged, cast, or die stamped marking by the manufacturer to show:

- name or trademark of manufacturer
- size
- model, if required to match wedge to body

4.5.9.2 Wire Rope Clips

Each wire rope clip saddle shall have forged or die stamped markings by the manufacturer to show:

- name or trademark of manufacturer
- size

NOTE: The only approved wire rope clips used by CB&I are Crosby brand.

4.5.10 Plate Clamps

4.5.10.1 The clamps described in Construction Manual 62 have been used extensively by CB&I and have proven to be safe and reliable. The list is kept small to assist CB&I in the safe use training, inspection and maintenance of clamps used in the work CB&I performs.

4.5.10.2 Most of the clamps listed are made by Renfroe. Renfroe offers other clamps beyond what is listed in this manual, on their website, www.jcrenfroe.com. Using Renfroe clamps which are not listed in this manual is deemed acceptable if proper training, use, inspection, and

maintenance is followed. With approval of local HSE managers and CCT, other manufacturer's clamps may be used per manufacturer's instructions for special applications. After using a clamp not listed in this manual, please give feedback on the clamp's use to CCT, so that other operating groups within CB&I may also benefit.

1. All clamps used by CB&I shall be properly identified based on the requirements found in ASME B30.20. Identification shall as a minimum consist of:

   a. Manufacturer's name and address
   b. Serial number
   c. Lifter weight, if over 100 lb (45 kg)
   d. ASME BTH-1 Design Category
   e. ASME BTH-1 Service Class
   f. Rated load

4.5.11 Hooks

4.5.11.1 CB&I requires a safety latch or mouse on all hooks for overhead lifting, with the exception of foundry hooks used to support the ends of plates in CB&I shops, grab hooks, and sorting hooks.

- Sorting Hooks (pelican hooks) are an excellent tool for shaking out structural steel, handling pipe, moving crane mats, etc. Overhead lifting is prohibited with this type of hook.

4.5.11.2 CB&I generally purchases Crosby hooks. The three most common types are the eye, swivel, and shank. Other manufacturers products may be used only if the manufacturer's name or trademark (not just Made in the USA, etc.) and the SWL or WLL are forged, cast, or die stamped on the hook.

4.5.11.3 Hooks are not to be loaded with multiple slings with an included angle of more than 90 degrees. Hook loading in these instances shall be within 45 degrees of the hook bowl center and in the plane of the hook.

4.5.12 Manually Activated Hoists used for Lifting (Tirfor Hoists, Chain Hoist and Ratchet Lever Hoists)

The hoists mentioned in this section may be used as independent hoisting equipment for loads. Use of these devices must comply with the manufacturer's requirements and the equipment specific sections of Construction Manual 62.

Exception: Ratchet lever hoists equipped with wire rope, roller chain or synthetic web load lines are prohibited for use in lifting of any kind.

4.5.12.1 Chain Hoists / Chain Falls / Tirfors used as an adjustable sling leg shall not be loaded beyond 75% of its rated capacity during the load handling operation.

4.5.12.2 Ratchet Lever Hoists require the use of a bypass sling when used as an adjustable leg in a rigging configuration under the hoist hook.

Note: The bypass sling is a secondary cable, essentially jumping the load adjustment hoist. It is a safety device in-place should the hoist fail. The bypass sling can connect to the same points as the hoist, or go directly from the load to the hook. A bypass sling should be kept as short as possible. A bypass sling with a large amount of slack can cause a dangerous shock load should the bypass be engaged.

4.5.12.3 When Tirfor hoists are used as an adjustable leg in a rigging configuration under the hoist hook, a Block-Stop is also required.

4.5.13 Shackles

4.5.13.1 Shackle Body Identification

Each new shackle body shall have forged, cast, or die stamped markings by the manufacturer to show:

- Name or trademark of manufacturer
- Rated load
- Size

4.5.13.2 Shackle Pin Identification

Each new shackle pin shall have forged, cast, or die stamped markings by the manufacturer to show:

- Name or trademark of manufacturer
- Grade, material type, or load rating

4.5.14 Adjustable Hardware

4.5.14.1 Turnbuckles, Eyebolts, and Eye Nuts

Turnbuckles are a type of adjustable rigging hardware that, provide a means of sling leg adjustment in multiple leg rigging configurations. Eyebolts and Eye Nuts provide a point of attachment to the load for other rigging components. Each turnbuckle, eyebolt, and eye nut shall be marked to show:

- Name or trademark of manufacturer
- Size or rated load
- Grade for alloy eyebolts and eye nuts

4.5.14.2 Swivel Hoist Rings

Swivel hoist rings are load-supporting devices capable of pivoting and rotating, consisting of four components: a bolt, a swivel bearing, a bushing flange, and a load connection fitting, such as a bail or eye. Each swivel hoist ring shall be marked to show:

- Name or trademark of manufacturer
- Rated load
- Torque value

4.5.15 Rigging Blocks

Each new rigging block shall be marked by the manufacturer to show:

- Name or trademark of manufacturer
- Rated load
- Rope size(s)

4.5.16 Detachable Load-Indicating Devices (LID)

Each LID shall be marked by the manufacturer to show:

- Name or trademark of manufacturer
- Rated load
- Serial number
- Model number

4.5.17 Links, Master Link Sub-Assemblies, Rings, and Swivels

Each new link, ring, and swivel shall be marked by the manufacturer to show:

- Name or trademark of manufacturer
- Size or rated load

- Grade, if required to identify rated load

4.6 Rigging Inspections

4.6.1 Frequent Inspections

All rigging equipment shall be inspected prior to use by a competent person.

4.6.1.1 If conditions exist and the user is not sure of its safety, the equipment shall be red tagged out of service and returned to the tool room or a designated location. The equipment shall remain out of service until a thorough inspection is performed by the competent person and deemed safe for use or the equipment is repaired or destroyed.

4.6.1.2 All repaired and/or destroyed equipment shall be logged as such on the appropriate form Rigging Inspection Form CMS-710-02-FM-02108, or equivalent.

4.6.2 Periodic Inspections

All rigging in use and available for use shall be inspected by a competent person at the frequencies specified below. These inspections shall be documented using CMS-710-02-FM-02108 or equivalent.

- Monthly and Annually
- Color coding is a good additional technique that can be applied to easily confirm monthly inspection. See CMS 710-02-FM-00502 Monthly Color Code
- Rigging equipment in storage at CB&I warehouses is not required to have monthly inspections, but will be inspected prior to issuance to a site by a competent person.

4.6.2.1 The following are options for identifying rigging equipment:

- Assign a unique identification number: Number may be marked on a tag or by other acceptable means. Slings and rigging hardware serialized by the manufacturer satisfy this requirement. Document the periodic inspection by recording the rigging component number on the Rigging Inspection Form CMS-710-02-FM-02108 or equivalent.
- Use a tag or sticker on each component: The tag or sticker shall include a sign-off by the competent person, the date inspected, and confirmation that the component passes inspection.

Note: The above identification systems apply to all rigging equipment unless excluded below.

4.6.3 Rigging equipment requiring documented monthly inspections shall use one of the following to provide a readily identifiable method of inspection verification:

4.6.3.1 Tags or stickers affixed to the equipment that complies with the following:

- Competent person sign-off
- Date of inspection

4.6.3.2 Apply monthly color code to each piece of equipment. See CMS 710-02-FM-00502 Monthly Color Code.

4.6.3.3 Slings – Monthly

- In addition to the monthly inspection, chain and metal mesh slings are required to have an annual third party documented inspection. This inspection is to ensure conformance with all applicable requirements and regulations
- Annual inspections shall adhere to ASME B30.9

4.6.3.4 Compression Hardware - Monthly

Compression hardware inspections are not required to be documented or identified unless required based on application.

4.6.3.5 Plate and Beam Clamps – Monthly and Annually

- All plate clamps require an annual inspection by a manufacturer certified inspector. Typically this will be done at a CBI Warehouse or approved vendor but may be done on site by an appropriately trained employee or manufacturer's representative with the approval of the local warehouse manager. This includes being fully dismantled for a visual inspection. During any inspection if the inspector finds damage or other reasons to suspect that the clamps integrity may have been compromised, the clamp shall be blasted clean and a Dye Penetrant or Magnetic Particle examination shall be performed. A 100% capacity load test is also recommended.
- The clamps are painted with an annual color code to signify the year of the last annual inspection. A cycle of four colors is used and repeated at the end of each cycle. At the end of this four year cycle, the clamps shall be blasted to remove the multiple layers of paint. The four colors are as follows:
  - Green for 2014
  - White for 2015
  - Blue for 2016
  - Yellow for 2017
  - Repeat cycle
  - Annual inspections are to be done each calendar year with a grace period of three months

4.6.3.6 Hooks –Monthly and Annually

- Hooks in regular service shall be governed by the kind of equipment in which they are used.
- All individual hooks used in lifting applications that are not part of a system shall have a documented periodic inspection in accordance with this procedure.

Note: Additional NDE examination (e.g. MT or PT) is required if visual inspection reveals the existence of any questionable condition.

4.6.3.7 Manual Activated Hoists used for lifting (Tirfor Hoists, Chain Hoist and Ratchet Lever Hoists) – Monthly and Annually

4.6.3.8 Shackles – Annually

- Documented OR color coded with the annual plate clamp color designation per this procedure.

4.6.3.9 Adjustable Hardware - Monthly

- Adjustable hardware inspections are not required to be documented or identified unless required based on application.

4.6.3.10 Rigging Blocks – Monthly

- Documented OR color coded with the annual plate clamp color designation per this procedure.

4.6.3.11 Detachable Load-Indicating Devices - Monthly and Annually

4.6.3.12 Links, Master Link Sub-Assemblies, Rings, and Swivels – Monthly

- Documented OR color coded with the annual plate clamp color designation per this procedure.

4.6.4 Rejection Criteria

4.6.4.1 Rejection criteria for slings and other related rigging hardware may be found in the following:

- CMS-710-02-FM-02108 Rigging Inspection Form
- Construction Manual 62

4.6.4.2 Defective rigging equipment shall be red tagged and returned to issuing authority for proper disposal.

4.7 Purchasing of Rigging Equipment

4.7.1 Purchased rigging equipment shall meet ASME B30 specifications or local regulations where more stringent, including marking requirements. Personnel responsible for purchasing rigging equipment shall be familiar with the requirements of Construction Manual 62 and this procedure.

4.8 Record Retention

4.8.1 All Lift Plan documents along with inspection forms shall be kept in the site files.

4.8.2 Files shall be maintained for the duration of the project and then archived with the project documents. Fixed sites shall retain files a minimum of three (3) calendar years after inspections.

4.9 Basic Rigging Safety Training

4.9.1 All operations management, supervisors, riggers, operators and other employees who engage in rigging operations and planning, shall attend the CB&I Basic Rigging Safety Course.

4.9.1.1 Prior to completing the Basic Rigging Safety Course, employees may use rigging equipment under the direct supervision of a Basic Rigging Safety trained employee for a period not to exceed 60 days.

- During this 60 day period, these employees must be clearly identifiable by either hard hat color, or a decal applied to the hard hat.

4.9.2 The length of the course shall be 12-16 hours of classroom training on basic rigging given by an "Authorized Instructor".

- The course length can be longer dependent upon the previous experience of the participants, language skills and class size.
- The purpose of this course is to teach safe methods that should be used to rig loads of various sizes, shapes, and weights.
- The course also includes information on how to avoid causing damage to the load and lifting equipment, and prevent injury.

4.9.3 Examination

4.9.3.1 At the conclusion of the classroom training, the employees must complete a written exam and achieve a passing score of 80% or greater.

- Employees not achieving a score of 80% will be allowed one opportunity to retest.
- This retest is to be administered within 7 days of the initial test.
- If the employee is unsuccessful in the retest attempt, they shall be required to retake the Basic Rigging Safety Course in its entirety.

4.9.3.2 Employees successfully completing the course test will receive a course certificate and a Type B Wallet Card CMS-710-02-FM-02802 upon completion of the Basic Rigging Safety Course.

4.9.4 Documentation

- Documentation of the Basic Rigging Safety Course, as a minimum, will consist of a copy of the course certificate of completion, and a copy of the Type B card issued. The employee's completed exam shall be placed in their personnel file.
- Employees' information shall be entered into the HSE Management System Training Data Base.

4.9.5 Basic Rigging Safety is good for three (3) years.

4.9.6 After three (3) years, an employee can “test out” of attending the course by scoring 80% on the general exam administered by an authorized instructor.

- If unable to achieve 80%, the employee must attend the complete Basic Rigging Safety Course.
- An employee can only test out of the course once in a 6-year period.
- Documentation of “test out” shall be, as a minimum, the employee's completed exam. The exam shall be placed in their personnel file.
- Employees' information shall be entered into the HSE Management System Training Data Base.

4.9.7 In addition, refresher training may be required if:

- The employee has been involved in a rigging Incident or near-miss incident;
- The employee has been observed rigging in an unsafe manner, or
- The employee has received an evaluation that reveals poor rigging practices.

4.10 Basic Rigging Safety Instructor Course

4.10.1 All CB&I Basic Rigging Safety Instructors shall complete the CB&I Basic Rigging Safety Instructor Course**.** The three (3) day course (approximately 24 hours) will consist of classroom and "hands on" instruction to prepare instructors to teach the CB&I Basic Rigging Safety Course.

4.10.2 This instructor course will be conducted by an instructor authorized by the Senior VP of HSE.

- This authorized instructor must have helped with a minimum of one CB&I Basic Rigging Safety Instructor Course and be experienced in conducting the CB&I Basic Rigging Safety Course.

4.10.3 Instructor Course Candidate

- The instructor course candidates shall have adequate background and proficiency to teach and instruct.
- Candidates shall have knowledge of CB&I rigging requirements and equipment, as well as basic knowledge in general industrial and construction rigging.
- Candidates shall have successfully completed the CB&I Basic Rigging Safety Course prior to attending the Instructors Course.

4.10.4 Examination

- Candidates shall demonstrate their knowledge and proficiency by achieving a score of 80% or greater on the instructor’s course exam.
- Upon satisfactory completion of the course, each instructor will be presented a course certificate which will qualify that person as an authorized instructor for the CB&I Basic Rigging Safety Course.
- Employees not achieving a score of 80% will be allowed one opportunity to retest.
- This retest is to be administered within 7 days of the initial test.

- If the employee is unsuccessful in the retest attempt, they shall be required to retake the Basic Rigging Instructor Course in its entirety.

4.10.5 Documentation

- Documentation of the instructor authorization, as a minimum, will consist of a copy of the course certificate of completion and a copy of the candidate's completed exam and shall be placed in their personnel file.
- Instructors' information shall be entered into the HSE Management System Training Data Base.

4.10.6 Maintaining Instructor Authorization

- Instructor authorization shall remain current as long as the instructor participates in training.
- If more than five (5) years has passed and the instructor has not participated in training, the instructor shall attend the Instructors course.

4.11 Accountability

4.11.1 Personnel, specifically the Supervisor and the rigger(s) performing rigging activities, are accountable for ensuring that lifts are properly planned and executed. Those who fail to adequately plan lifts and practice safe rigging are subject to disciplinary action in accordance with the CB&I Constructive Discipline Action Program CMS-710-05-PR-00200 up to and including termination.

5.0 REFERENCES

CMS-710-02-FM-02108	Rigging Inspection Form
CMS-830-17-PR-60001	Lift, Rigging and Transport Plans
CMS-830-17-FM-60001	CB&I Lift Plan
CMS-830-17-FM-60002	Hoisting Log Form
	Construction Manual 62
ASME B30.9	Slings
ASME B30.10	Hooks
ASME B30.16	Overhead Hoists (Underhung)
ASME B30.21	Manually Lever Operated Hoists
ASME B30.26	Rigging Hardware

6.0 TERMINOLOGY

Competent Person	Competent person means one who is capable of identifying existing and predictable hazards in the surroundings or working conditions, which are unsanitary, hazardous, or dangerous to employees, and who has authorization to take prompt corrective measures to eliminate them.
Site	Any location, facility or project where CB&I is performing work. Sites may include, but are not limited to, laboratories, offices, shops, owned facilities, leased facilities and/or project sites.
Qualified Person	Qualified person means one who, by possession of a recognized degree, certificate, or professional standing, or who by extensive knowledge, training and experience, has successfully demonstrated his ability to solve or resolve problems relating to the subject matter, the work, or the project.

7.0 EXHIBITS

Exhibit 7.1	CMS-710-02-FM-02802 – Type B Wallet Card
Exhibit 7.2	CMS-710-02-FM-00502 – Monthly Color Code
Exhibit 7.3	CMS-720-01-FM-00020 – Business Glossary
Exhibit 7.4	CMS-720-01-FM-00021 – Technical Glossary

8.0 ATTACHMENTS

None

ATTACHMENT 9

CMS-710-02-PR-01900, MOBILE CRANE SAFETY

PROCEDURE

Procedure Title:	**Mobile Crane Safety**	**CMS Number:**	**CMS-710-02-PR-01900**
Procedure Owner:	**Corporate HSE**	**Issuing Authority:**	**VP Global HSE**

MOBILE CRANE SAFETY

6A3	Preliminary Review-4.7.3.6 has been revised. November 10, 2014 has been changed to November 10, 2017.	CPJ	18 Nov 2014
6A2	Preliminary Review-Made revisions to examination requirements listed in 4.7.1.9 and 4.7.4.4. Definitions added for Load and Payload	CPJ	7 Nov 2014
6	Issued for Use – Removed hyperlinks only. No change to content. No Issuing Authority Approval required.	CPJ	22 Oct 2014
5	Issued for Use: Total rewrite to combine CMS-710-02-PR-01900 and CMS-710-02-PR-05900 to withdraw 05900. (No Rev Bars)	JPO	16 May 2014
4	Issued for Use – Revised 4.5.7: removed "on the crane or the site" and added "available within the cab", 4.5.11: added "a tag line may also be used to control the load/sling, 4.9.8: removed post- hire and pre-assignment. Added post-offer and pre-hire, moved glossaries to 7.0 Exhibits & added section 8.0 Attachments. (See Rev Bars)	JPO	20 Jun 2013
0	Issued for Use	JPO	05 Dec 2008
Rev	**Changes**	**Approved**	**Date**

"©Chicago Bridge & Iron Company, 2009. All Rights Reserved. For Internal Use Only.
NOTICE: THIS DOCUMENT, AND ALL TEXT, DRAWINGS, DETAILS AND DATA SHOWN HERETO, IS THE SOLE PROPERTY OF CHICAGO BRIDGE & IRON COMPANY, AND SHALL NOT BE REPRODUCED IN ANY MANNER, USED FOR ANY PURPOSE WHATSOEVER, OR RELEASED TO ANYONE EXCEPT BY EXPRESS WRITTEN PERMISSION OF CHICAGO BRIDGE & IRON COMPANY."

1.0 PURPOSE

The purpose of this procedure is to establish the minimum requirements for mobile cranes on CB&I sites.

2.0 SCOPE

This procedure applies to all CB&I employees, contractors, subcontractors and visitors associated with a CB&I site.

3.0 RESPONSIBILITIES

The following personnel have responsibilities defined in this procedure:

- CB&I Managers
- CB&I Supervisors
- CB&I Employees
- CB&I Contractors
- CB&I Subcontractors
- CB&I Visitors

4.0 PROCEDURE

Each site will make every attempt to prevent the possibility of injury to employees or damage to the equipment or facilities when performing work activities with mobile cranes. This shall be accomplished through compliance with safety regulations and training of employees to properly perform their job activities.

4.1 Responsibilities

4.1.1 Management shall:

4.1.1.1 Develop and implement safe operating, inspection and maintenance procedures for crane use.

4.1.1.2 Verify that CB&I signal persons, riggers and supervisors involved with crane operations on their site are trained in accordance with the requirements of this procedure.

4.1.1.3 Verify that CB&I crane operators on their site are trained, certified and qualified based on the requirements of this procedure.

4.1.1.4 For short duration projects, less than two weeks, a non-CB&I certified supplier furnished crane operator may be used providing all of the following conditions are met:

- The operator meets CB&I's physical requirements.
- Passes CB&I Crane or Derrick Operators Functional Test.
- A CB&I qualified crane safety-trained supervisor, signal person or rigger assists the non-CB&I certified operator with the lift planning for all lifting operations.

4.1.1.5 Verify that operator(s) provided by others (customer/vender/subcontractor) are certified or qualified by the supplier in accordance with the Federal, State and Local Government requirements and applicable ASME B30 requirements, equivalent to CB&I's program. In addition, subcontractors shall comply with and have access to the CB&I procedures relevant to these activities.

- Operators shall meet the physical requirements found in this procedure.

4.1.1.6 Ensure that crane(s) supplied by others (customer/vender/subcontractor) are safe and suitable to meet the requirements of the job

4.1.1.7 Ensure lift plans are developed and approved as required in CMS-830-17-PR-60001 Lift, Rigging, and Transport Plans and CMS-710-02-PR-02100 Lift and Rigging Safety.

4.1.2 Crane Owners shall:

4.1.2.1 Provide safe and suitable equipment to meet the requirements of the job.

4.1.2.2 Ensure that operators, when provided, are trained, certified, qualified and aware of their responsibilities.

4.1.2.3 Ensure maintenance, repair, transport, assembly/disassembly, and other personnel are trained and experienced to handle their specific jobs.

4.1.2.4 Clearly convey the responsibilities and authority to each crew member.

4.1.2.5 Implement a thorough equipment maintenance and inspection program, including logbooks and other required documentation, in accordance with manufacturer's requirements and applicable regulations.

4.1.3 Supervision shall:

4.1.3.1 Have overall responsibility for the lift and ensure proper planning for all phases of the operation.

4.1.3.2 Ensure that all CB&I crane operators are trained, certified and qualified as defined in this procedure.

- If the crane is operated by others (customer/vender/subcontractor), confirm with the Site Manager that the operator is trained, certified and qualified.

4.1.3.3 Ensure all safe operating, inspection and maintenance procedures are followed.

4.1.3.4 Ensure that all hoisting performed at the site is in accordance with the lift plan.

4.1.3.5 Ensure that all personnel involved in the operation understand their jobs, responsibilities, and their role in the overall safety of each lift by attending the JSA and lift plan meeting.

4.1.3.6 Supervise all work involving the crane and the rigging crew.

4.1.3.7 Ensure that there are no underground or aboveground pipelines, utilities or overhead power lines that could affect the crane's set up and operation and if so, precautionary measures are taken.

4.1.3.8 Determine the correct load weight and radius and inform the operator.

4.1.3.9 Ensure the rigging crew is experienced and capable of establishing or knowing weights; judging distances, heights, and clearances; selecting tackle and lifting gear suitable to the loads and rigging the load safety and securely.

4.1.3.10 Ensure the load is properly rigged and tagged when tag lines are required..

4.1.3.11 Ensure the safety of the rigging crew and other personnel affected by the crane operations.

4.1.3.12 Control the movements of all personnel in the area affected by the lift and keep the public and all non-essential personnel clear of the crane during operations.

4.1.3.13 Ensure all required precautions are taken when the lift is near power lines or bus bars.

4.1.3.14 Ensure the signal person is trained, designated and capable of directing the movements of the load and equipment safely and is identified to the operator.

4.1.3.15 Ensure matting requirements are identified and met.

4.1.3.16 Ensure all safety precautions for the job are taken and job site specific rules followed.

4.1.3.17 Comply with the following when acting as the crane operator:

- Delegate overall supervisory duties to another competent person in the crew.
- Hold current operator certification/qualification for the crane model, type and tonnage to be operated.
- Obtain written authorization from the Business Line VP or their designee.
- If written authorization is not granted in advance and a supervisor must operate, all the following shall be done:
- The supervisor shall obtain verbal approval daily, from the VP Operations/Facilities or his designee via the Site Manager.
- The supervisor shall hold current certifications and qualifications for the crane being used.
- Another crane safety competent person shall be in charge of the lifting activities.

4.1.3.18 Note: The supervisor's overall responsibilities require their time and attention in many different matters. For this reason, supervisors are discouraged from operating cranes.

4.1.4 Assembly/Disassembly (A/D) Supervisor:

4.1.4.1 The A/D Supervisor shall:

- Have knowledge of procedures and understand the applicable assembly/disassembly procedures.
- Review the applicable assembly/disassembly procedures immediately prior to the commencement of assembly/disassembly unless the A/D supervisor has applied them to the same type and configuration of equipment (including accessories, if any) so that they are already known and understood.
- Ensure that an assembly/disassembly checklist is prepared or provided by the crane supplier and followed.
- Ensure that experienced personnel are available for all assembly/disassembly activities.
- Ensure that all tools and equipment required for assembly/disassembly are available.

4.1.4.2 The supervisor must determine that the crew members understand the following:

- Their tasks.
- The hazards associated with their tasks.
- The hazardous positions/locations that they need to avoid.

These tasks and hazards should be documented on the JSA (CMS-710-05-FM-01701 or equivalent). The JSA should be covered thoroughly with the crew before the start of any job or operation.

4.1.5 Operators

The operator is responsible for conducting the lift safely. Certified or qualified operators are responsible for following safe operating rules and practices. They shall be aware of hazardous conditions in order to protect themselves, other personnel, the crane and the load that is being lifted. The operator shall be familiar with operation and function of all controls and operator aids. Before operating any crane, operators shall have reviewed and be familiar with the operation manual for the particular crane being operated.

4.1.5.1 The operator must know:

- The particular model of crane they are operating, its characteristics, functions, limitations and information in the crane's operating manual.
- How to read and interpret the crane's load charts, including all notes and warnings, and how to calculate or determine the actual capacity in every possible configuration.
- Proper inspection and maintenance procedures to be followed in accordance with the guidelines of the manufacturer and owner.
- Any site conditions that may affect the crane's operation, including the presence of overhead power lines.
- How to estimate weight by calculation.
- Basic load rigging procedures.
- Both methods of signaling (Hand and Voice).

4.1.5.2 In addition, the operator shall:

- Check that the site is properly prepared for crane operation.
- Be responsible for those operations under their direct control.
- Consult supervision if there is any doubt as to the safety of any lift.
- When physically or mentally unfit, not engage in the operation of the crane.
- Inform the owner and/or supervision, in writing, of any problems with the crane, preferably in the logbook. Also, record all inspection, maintenance and work done on the crane in the field.
- Respond to signals from the designated signal person. Obey a stop signal at all times, no matter who gives it. When a signal person is not required as part of the crane's operation, the operator is then responsible for the lift.
- Confirm adequate area lighting for the operation that does not interfere with the operator's view.

- Review plans and requirements with site supervision to confirm the load weight (including rigging), maximum radius and where the load is to be placed.
- Determine the number of parts of hoist line required.
- Check the load chart to ensure that the crane has enough capacity for each planned lift.
- Know and follow the procedures specified by the manufacturer or approved by a qualified person, for assembly, disassembly, setting up, and reeving the crane.
- Follow the manufacturer's operating instructions in accordance with the load chart.
- Consider all factors that may reduce capacity and adjust the load weight accordingly.
- Be aware of site hazards and conditions.
- Select the best boom, jib and configuration to suit load, site, and lift conditions.
- Ensure that the oiler (if provided) is in a safe place during operation.

- Ensure the equipment is operated in accordance with the manufacturer's recommendations for levelness.
- Wear the seat belt, if supplied.
- Be alert and not engage in any activities that may divert attention while operating the crane, (e.g. talking on a cell phone or having a conversation with other employees).
- Complete the Hoisting Log CMS-830-17-FM-60002 or equivalent when required, and make a "go - no go" decision for every lift.
- Know the sequence of activities involved in each lift.
- Maintain communication with the signal person, by sight or radio.
- Operate in a smooth, safe, controlled manner.
- Activate the warning device when approaching persons in the path of the load.
- Ensure all hazardous areas are properly barricaded (e.g. counterweights)
- Reduce operation speed during weather conditions that produce icing of the crane's structure or reduce visibility. Confirm signaling means are appropriate for the site conditions.
- Never attempt to start or activate any controls when the crane is tagged out of service.

4.1.5.3 Exception: When operation of the crane is necessary during maintenance or repair activities, and all personnel involved in the activity are aware of the crane's operation.

4.1.6 Designated Signal Person shall:

4.1.6.1 Maintain full view of the intended path of travel of the load.

4.1.6.2 Be responsible for the lift when the operator's view of the lift is obstructed.

4.1.6.3 Be clearly identifiable and have a means to alert personnel of load movement

4.1.6.4 Be in constant communication with operator, either visually with hand signals or audibly by radio throughout the lift.

4.1.6.5 Direct the load so that it does not pass over personnel.

4.2 Site Conditions

4.2.1 Crane Support

Mobile cranes need a firm, uniform and level base. This is true while the crane is stationary or traveling with or without a load. Firm surface is ground that will support a loaded crane without shifting or settling. Uniform surface conditions means that all ground in the crane's working area is consistent.

4.2.1.1 Crane Mats

- The most common precaution for lifting on soft or non-uniform soil is the use of mats. Mats should always be substantial since they must transmit crane loads to a larger surface area.
- For use with outriggers, pads should be sized to provide the required support. The "rule of thumb" is that pads be at least three times larger in surface area than the float it supports and at a 90º angle to the outrigger cylinder.
- When crawler or rubber tire carriers are used on soft ground, appropriate load bearing crane mats shall be used.
- Crane mats shall be suitable for the crane and the loading conditions of the mat as determined by a competent individual. Where there is a question of suitability, CCT should be consulted to determine whether configuration is adequate.

- NOTE: Lattice "Mud" mats are an aid for moving an unloaded crane and are not adequate mats for crane lifts.

4.2.1.2 Levelness

- Cranes must always be operated within the levelness parameters established by the crane manufacturer. If no criteria are specified, use 1% (1.2” in 10’ / 30 mm in 3 m) as the minimum criteria.
- Target levels provided in most operators’ cabs can be used for non-critical or initial leveling, but on capacity lifts, an additional check (e.g.., placing a carpenter's level between the boom foot pins of lattice boom cranes or on the turntable of telescopic boom cranes) should be made.
- Levelness shall be checked with the boom over the rear as well as over the side.

4.2.2 Wind Conditions

- Wind speed and other weather conditions also affect crane use. The operator must be familiar with the wind limitations of the crane that they are operating and take appropriate actions based on the manufacturer’s instructions.
- Above 20 mph (32km/h) wind speed, extreme care should be used, and at 30 mph/48 km/h, operations shall be halted.
- Long booms and tall towers may experience higher wind speeds above ground level. Buildings or structures near the lifting area can funnel or increase wind speeds. Gusting winds may make it impossible to control the load even though predominate winds may be well below 30 mph/48 km/h**.**
- All sites where cranes are used shall have as a minimum a hand held wind anemometer to help determine wind speeds.

4.2.3 Power Lines

All crane operations conducted around power lines shall be executed in compliance with the requirements found in CMS-710-02-PR-06600.

4.2.4 Lifting Over Live Pipelines, Tanks or Vessels

Lifting over live pipelines, tanks or vessels is prohibited unless approval is obtained through the Red Sheet process. In some cases, Corporate Risk approval must be obtained. See CMS-710-02-PR-05300 Extra Hazardous and Repair Work.

4.3 Assembly/Disassembly

Crane assembly/disassembly includes initial assembly, crane reconfigurations, selective maintenance/servicing and disassembly activities.

- A crane reconfiguration is the physical addition or removal of any crane component which would affect the crane’s point of lifting, present lifting capacity, require a change in load charts or the use of additional load charts.
- This includes a movement within a specific configuration (e.g. gantry repositioning and lowering boom for maintenance/servicing) which would require the review of additional manufacture procedures beyond the normal crane operation.

4.3.1 Assembly/disassembly and any reconfiguration of a crane must be supervised by a person who meets the criteria for both a competent person and a qualified person, or by a competent person who is assisted by one or more qualified persons. In either case, a single individual must be responsible for the overall scope.

4.3.2 These activities shall be performed in accordance with manufacturer’s procedures or site procedures approved by a qualified person.

4.3.3 Protecting assembly/disassembly crew members out of operator view.

- Before a crew member goes to a location that is out of view of the operator and is either: in, on, or under the equipment, or near the equipment (or load) where the crew member could be injured by movement of the equipment (or load), the crew member shall inform the operator that he/she is going to that location.
- Where the operator knows that a crew member went to a location that is out of view of the operator, the operator shall not move any part of the equipment (or load) until the operator:
  - Gives a warning that is understood by the crew member as a signal that the equipment (or load) is about to be moved and allows time for the crew member to get to a safe position, or
  - Is informed in accordance with a pre-arranged system of communication that the crew member is in a safe position.

4.3.4 Working under the boom, jib or other components.

4.3.4.1 When pins (or similar devices) are being removed, employees must not be under the boom, jib, or other components. .

4.3.4.2 Exception: Where the employer demonstrates that site constraints require one or more employees to be under the boom, jib, or other components when pins (or similar devices) are being removed, the A/D supervisor must implement procedures that minimize the risk of unintended dangerous movement and minimize the duration and extent of exposure under the boom.

4.3.5 The A/D Supervisor must address the hazards associated with the operation, which include:

4.3.5.1 Site and ground bearing conditions: Site and ground conditions must be adequate for safe assembly/disassembly operations and to support the equipment during assembly/disassembly.

4.3.5.2 Blocking material: The size, amount, condition and method of stacking blocking must be sufficient to sustain the loads and maintain stability.

4.3.5.3 Proper location of blocking: When used to support lattice booms or components, blocking must be appropriately placed to:

- Protect the structural integrity of the equipment, and
- Prevent dangerous movement and collapse.

4.3.5.4 Verifying assist crane loads: When using an assist crane, the loads that will be imposed on the assist crane at each phase of assembly/disassembly must be verified before assembly/disassembly begins.

4.3.5.5 Boom and jib pick points: The point(s) of attachment of rigging to a boom (or boom sections or jib or jib sections) must be suitable for preventing structural damage and facilitating safe handling of these components.

4.3.5.6 Center of gravity:

- The center of gravity of the load must be identified if that is necessary for the method used for maintaining stability.
- Where there is insufficient information to accurately identify the center of gravity, measures designed to prevent unintended dangerous movement resulting from an inaccurate identification of the center of gravity must be used.

4.3.5.7 Stability upon pin removal: The boom sections, boom suspension systems (such as gantry A-frames and jib struts), and components must be rigged or supported to maintain stability upon the removal of the pins.

4.3.5.8 Snagging: Suspension ropes and pendants must not be allowed to catch on the boom or jib connection pins or cotter pins (including keepers and locking pins).

4.3.5.9 Struck by counterweights: The potential for unintended movement from inadequately supported counterweights and from hoisting counterweights.

4.3.5.10 Boom hoist brake failure: Each time the boom hoist brake is relied upon to prevent boom movement during assembly/disassembly, the brake must be tested prior to such use to ensure it is capable of preventing boom movement. If the brake is not capable of preventing boom movement, a boom hoist pawl, other locking device/back-up braking device, or another method (e.g. blocking or assist crane use) shall be used.

4.3.5.11 Loss of backward stability: Be aware of backward stability issues before swinging the upperworks, traveling, and when attaching or removing equipment components.

4.3.5.12 Wind speed and weather: The effect of wind speed and weather on the equipment shall be considered.

4.3.6 For additional information regarding crane assembly/disassembly see Part 8 of Construction Manual 300.

4.4 Lift Planning

4.4.1 The operator must know the weight of every load to be lifted.

4.4.2 The load to be lifted shall be within the rated load of the crane in its existing configuration.

4.4.3 For lifts where the load weight is not accurately known, the person responsible for the lift shall ascertain that the weight of the load does not exceed the crane's ratings at the radius at which the load is to be lifted.

4.4.4 As gross lift weight approaches the crane's capacity limit, it becomes critical to verify the crane's set-up and the lift radius. At 75% of the crane's rated capacity:

4.4.4.1 Ensure an accurate load weight is available

4.4.4.2 Verify the radius using exact means such as a tape measure or surveying instruments

4.4.4.3 Verify levelness as described in Section 4.2.1.2 of this procedure

4.4.4.4 Note: Minimum equipment required in the crane for this purpose is a calculator, a 100' (30 m) tape measure and a carpenter's level.

4.4.5 Load Rating Chart

A durable chart with legible letters and figures shall be provided with each crane and readily available within reach of the crane operator while seated at the controls. The content of these charts shall include, but not be limited to, the following:

4.4.5.1 A full and complete range of crane load ratings at all stated operating radii, boom (jib) lengths, hoist line reeving, and where appropriate, for each available hoist line speed range and recommended counterweight arrangement.

4.4.5.2 Precautionary or warning notes relative to limitations on equipment, and operating procedures.

4.4.5.3 Note: Always consult the crane's operation manual for a complete list of deductions and precautionary notes.

4.4.6 Lift Documentation

4.4.6.1 Lifts considered category 4, 3 and 2 lifts (as defined in CMS-830-17-PR-60001) shall be documented using form CMS-830-17-FM-60001 or equivalent.

4.4.6.2 Lift category 1 lifts shall be documented using CMS-830-17-FM-60002 Hoisting Log or equivalent for lifts greater than 50% of the crane's capacity.

- For similar lifts made by the same crane at the same location, a single entry on the Hoisting Log (or equivalent) using the most severe combination of conditions (e.g. load weight, radius, boom length/configuration, and carrier set-up) may be used to document these lifts.

4.4.6.3 Lift category 0 lifts require no documentation.

4.5 Operation

4.5.1 Start Up

4.5.1.1 Prior to start-up the operator shall ensure that all non-skid surfaces, grab bars, and guardrails are in place and undamaged. Operators shall face the machine and maintain three points of contact when climbing onto or off of the crane

4.5.1.2 All applicable danger signs shall be posted. These include, but are not limited to:

- Danger Electrical Hazard
- Swing Radius Warning
- Step Warnings

4.5.1.3 A copy of the manufacturer's operator's manual for each make and model shall be available within the cab, and the manufacturer's specifications and limitations noted shall be observed.

4.5.1.4 Before attempting to start the engine, ensure all controls are set according to manufacturer's instructions.

4.5.1.5 A daily functional test shall be conducted to insure that all functions of the mobile crane are operating properly (e.g. clutches, brakes, frictions, and swing).

- All controls shall be tested by the operator at the start of a new shift. If any controls do not operate properly, they shall be adjusted or repaired before operations are begun.
- Prior to daily operation, operator aids shall be checked to determine if they are working.

4.5.2 Signal Person Requirements:

4.5.2.1 All signal persons shall be qualified and competent.

4.5.2.2 Training shall include:

- CB&I's Mobile Crane and Derrick Signal Person training module 02-05900 or equivalent.
- A written test
- Practical/functional test - CMS-710-02-FM-05901 Mobile Crane & Derrick Signal Person Functional or equivalent

4.5.2.3 All mobile cranes must have a competent signal person present and directing all crane movement, including travel from one work location to another.

4.5.3 Signaling Requirements

4.5.3.1 The hand signals used shall be those specified by ASME B30 applicable to each crane. See Exhibit 7.5 Required Crane Operation Hand Signals. Other non-verbal communication, such as shell tapping (rapping off) to signal the operator is prohibited, except in an emergency such as radio failure.

4.5.3.2 Only one individual shall be assigned the signalling duties, and no other person shall signal during the lift, with the exception of a person giving an emergency stop signal.

4.5.3.3 ASME B30 or equivalent crane hand signals poster shall be posted at each site where cranes are being operated.

4.5.3.4 When contact between the signal person and operator is lost, the operator shall bring the crane and load to a stop and no movement should be made until communication is restored.

4.5.3.5 Radio Signals for Cranes

This method allows the operator to keep his eyes on the load, boom and load path of travel and not on the signal person. Radio signaling is most often used when the operator cannot see the load on the hook or signal person. The operator must depend on the signal person to be his eyes and communicate in a clear understandable language what direction and distance to move the load.

- Once the lift has begun, the signal person should use constant communication (i.e., never releasing the key to the microphone). The signal person will slowly repeat command over and over, reassuring the operator that everything is clear and the lift is progressing as planned. If the signal person breaks communication, the operator shall stop all operations. Before continuing the lift, the operator must acknowledge the signal person by name and re-establish communication with the signal person.
- If the operator sees a problem with the lift and needs to communicate with the signal person, the operator must stop the operation. When the operator stops the operation, the signal person will un-key the microphone, allowing the operator to communicate the problem.
- Anyone seeing a problem can stop the lift by alerting the operator or signal person or by giving the emergency stop signal.
- The supervisor, operator and signal person should discuss the lift plan and agree on how the lift will be made.
- The radios should be tested to assure proper working order and the channel is clear of outside interference. Extra batteries or radios might be needed if extended communication is expected.
- The signal person shall begin each instruction by calling the operators by name. This is even more important when two or more cranes are used in the lifting operation.
- The operator shall respond by acknowledging the signal person by name.
- The signal person shall always give the approximate distance or speed at which the load will be moved.

4.5.3.6 At the completion of each command, the signal person will stop the operation by repeating the function in progress and “Stop”, e.g “Boom up Stop”.

4.5.3.7 Standardized Voice Signals

- Each voice signal must contain three elements given in the following order:

  1. Function and direction
  2. Distance and/or speed
  3. Function stop

4.5.3.8 Signal Examples:

- swing right 50 ft, 25 ft, 15 ft, 10 ft, 5 ft, 2 ft, swing stop
- load down 100 ft, 50 ft, 40 ft, 30 ft, . . . 2 ft, load stop
- load up slow, slow, slow, load stop

4.5.3.9 The following are examples of function and direction signals:

- Hoisting and Lowering the Load: If the crane is equipped with more than one load hoist and the lift requires the use of both, the signal person must instruct the operator to Use Main Block, or Use Auxiliary Hoist (Whip Line). The following commands shall be given to hoist (raise) and lower the load: (i.e. "Main Block Up", "Main Block Down", "Whip Line Up", and "Whip Line Down")
- Using the Boom: The following commands shall be given to raise and lower the boom: (i.e. "Boom Up", "Boom Down").
- Using the Boom and Hoist: The following commands shall be given to raise/lower the boom and raise/lower the load at the same time: (i.e. "Boom Up and Hold Load Level", "Boom Down and Hold Load Level"). NOTE: This command should never be given when operator cannot see the load.
- Extending and Retracting Boom: The following commands shall be given to extend/retract boom: (i.e. "Boom Extend Out", "Boom Retract In").
- Extending and Retracting Boom and Using Hoist: The following commands shall be given to extend/retract boom and hoisting up/down on load: (i.e. "Boom Extend Out and Hold Load Level", "Boom Retract In and Hold Load Level"). NOTE: This command should never be given when operator cannot see the load.
- Swing the Boom: The following commands shall be given to swing boom right and left: (i.e. "Swing boom to your Right", "Swing boom to your Left"). NOTE: Always give direction to the operators (Right or Left)

4.5.4 Operating Practices

4.5.4.1 Never load a mobile crane above their rated capacity. Do not use back guys, additional counterweights, or other means to obtain more lifting capacity (unless specified by the manufacturer).

4.5.4.2 Attachments used with mobile cranes shall not exceed the capacity rating or scope recommended by the crane's manufacturer.

4.5.4.3 Keep the load lines vertical so that no side pull is placed on the crane's boom.

4.5.4.4 When a non-loaded sling is being carried, hook both sling eyes to the block hook to prevent striking or hooking other objects. A tag line may also be used to control the load/sling.

4.5.4.5 Raise unloaded hooks, slings or rigging a minimum of 7 ft. (2.1 m) above all surfaces or obstructions before starting movement of the crane in any direction.

4.5.4.6 The operator shall have a clear line of site of the lift at all times or a trained signal person shall be assigned to direct the operation.

4.5.4.7 If the LMI must be overridden (e.g., to make the crane operate to a shorter radius, boom angle or lower the load), the operator shall inform the superintendent and a safe plan of action shall be established before proceeding. If the superintendent is not at site, the Site Manager and HSE Manager shall be notified in advance of overriding the LMI. If the superintendent is the operator, he shall contact the Site Manager and HSE Manager to get approval. Any overriding of the LMI is a near miss incident and must be reported.

4.5.4.8 Note: The only exception to this near miss reporting is during functional testing of the boom raising and lowering system or if required by the crane assembly plan.

4.5.4.9 An accessible, approved fire extinguisher (Minimum 10 BC) shall be available to all operating stations of the crane.

4.5.4.10 When operating any crane, a functioning anti-two block (A2B) system or two-block damage prevention device is required. When both auxiliary and main hoist lines are reeved, a functioning A2B system or two-block damage prevention device is required on both the auxiliary and main hoist lines.

- An A2B is a device that will stop the actions that can cause two-blocking.
- Lights or other warning systems do not meet the requirements.
- Prior to the initial use of any hoist during each shift, the operator shall verify operation of the A2B device under no-load conditions.
- Care shall be exercised; the block shall be inched into the A2B or run in at slow speed.
- If the A2B does not operate properly, the operator shall immediately notify his supervisor/maintenance.
- The A2B that controls the upper limit of travel of the load block shall not be used as an operating control in normal operation.

4.5.4.11 All personnel shall be kept clear of pinch points created by crane or load movement.

4.5.4.12 The load, sling or lifting device should be seated in the bowl of the hook. Hooks shall never be tip loaded.

4.5.4.13 Ensure the load is secured, balanced, and positioned in the hook, sling, or lifting device as the load is initially lifted.

4.5.4.14 Ensure the rope is seated in the drum grooves (or drums with grooves) and in the sheaves, if there is or has been a slack rope condition.

4.5.4.15 When two or more cranes are used to lift a load, a Qualified Person shall be in charge of the operation.

- This person shall analyze the operation and instruct other personnel involved in the proper positioning, rigging of the load, and the movements to be made.

4.5.4.16 Ensure there is no sudden acceleration or deceleration of the moving load, and the load does not contact any obstructions.

4.5.4.17 Do not allow uncontrolled load swing.

4.5.4.18 Keep the crane and load under control.

4.5.4.19 The operator shall not cause the crane to lift, lower, or travel while anyone is on the load or hook.

4.5.4.20 The operator shall never carry loads over people.

4.5.4.21 The operator shall check the hoist brake(s) at least once each shift if a load approaching the rated load is to be handled.

- Testing of the brake shall be done by lifting the load a short distance and applying the brake(s).

4.5.4.22 Never leave an unattended load on a crane. A suspended load shall always be attended.

4.5.4.23 When raising and lowering a load, make sure it safely clears adjacent stockpiles or equipment.

4.5.4.24 Keep hands and body free of “pinch points” when hooking or unhooking.

4.5.4.25 Before horizontal movement of the boom, ensure the load is high enough to clear all obstacles and if required sound the warning device.

4.5.4.26 Keep the load lines vertical so that no side pull is placed on the boom.

4.5.4.27 The load shall be attached to the hook by means of slings or other approved lifting devices.

4.5.4.28 Never allow a load to rest on rigging components; use adequate blocking to prevent damage to this equipment.

4.5.4.29 Loads must be safely landed and properly blocked before attempting to remove rigging.

4.5.4.30 Tag lines or push/pull poles shall be used to prevent hazardous rotation or movement of the load when necessary.

4.5.4.31 Consider the weight of hooks, blocks and lifting slings as part of the total lifted load.

4.5.4.32 If power fails during operation, the operator shall;

- Set all brakes and locking devices, as applicable.
- Move all clutch or other power controls to the off or neutral position.
- If practical, the suspended load should be landed under brake control.

4.5.4.33 Before leaving the crane unattended, the operator shall:

- Land any load, bucket, lifting magnet, or other device.
- Set all locking devices.
- Disconnect power or disengage the master clutch, as applicable.
- Place all controls in the off or neutral position.
- Secure the crane against inadvertent travel.
- Stop the internal combustion engine, when provided.
- Restrain the crane from travel when a wind alarm is given or on leaving the crane overnight.

4.5.4.34 Note: An exception may exist when the crane’s operation is frequently interrupted during a shift. Under these circumstances, the crane may remain running while the operator remains on the superstructure or within 25’ (7.6m) of the crane with a clear view of the operator’s station.

4.5.4.35 Upon completion of the work shift:

- Set brakes and clutches as recommended by the manufacturer.
- Secure the boom to prevent its accidental dropping or swaying.

4.5.5 Personnel Safety

4.5.5.1 Do not ride a crane's sling, hook or load.

4.5.5.2 Do not get on or off equipment while it is in motion.

4.5.5.3 Accessible areas to moving parts shall be barricaded or guarded.

4.5.5.4 Stay clear of moving equipment whenever there is a danger from swinging booms, crane cabs, counterweight, and suspended loads.

- No person shall be permitted to stand or pass under a suspended load.
- When operating a crane with a suspended load, the operator is required to sound a warning to other workers prior to that load being moved into the area containing the workers.

4.5.5.5 No person, other than the operator, shall ride on a crane,

4.5.5.6 All hooks shall be equipped with a safety latch or be moused.

4.5.6 Crane Travel

4.5.6.1 All mobile cranes must have a qualified signal person present and directing all crane movement, including travel from one work location to another.

4.5.6.2 All sites shall have a "Crane Travel Plan" which shows all areas, roads, streets and right of ways where the crane may be operated and authorized to travel.

4.5.6.3 The Crane Travel Plan shall be developed and signed by the operator and supervisor, made known and accessible to the signal person/rigger, and kept in the crane cab at all times.

4.5.6.4 The Crane Travel Plan may be in the form of a job safety analysis (JSA).

4.5.6.5 Crane Travel - Hydraulic Booms

4.5.6.6 Long Distances: When traveling with crane over long distances 100’ (30 m) or more of continuous travel, the following conditions shall be strictly adhered to before moving the crane:

- Ensure all boom sections are fully retracted, except when working inside tanks.
- Ensure the jib, boom extension and manual sections are properly stowed and secured as required by the manufacturer.
- Swing the boom to over-the-front and lower the boom to slightly above horizontal for Rough Terrain (RT) cranes. For all wheel mounted cranes with telescopic boom and multiple control station, the boom should be lowered into the boom cradle.
- Set the swing brake.
- Engage the swing lock.
- Ensure the headache ball and/or hook block is properly secured (tied down) to prevent swing that could damage the boom or other crane components.
- Outrigger deployment shall be as specified by the manufacturer.
- The path of travel shall be walked and inspected to ensure firm, uniform, and level ground.
- All overhead hazards shall be identified and marked (e.g. electrical lines and pipe racks).
- Crane shall not be moved without a trained signal person directing the operation.

4.5.6.7 Short Distances: When traveling short distances within immediate work area, (e.g. adjacent tank within same fire wall, new set-up location on same tank or structure), follow all the instructions for long distance travel. The only exception being, you may travel short distances with the jib, extension

and manual sections installed unless the manufacturer specifically states otherwise.

4.5.6.8 Crane Travel – All Mobile Cranes

Follow all manufacturer rules and instructions when moving these types of cranes with or without jibs.

4.5.7 Traveling with a Load (Pick and Carry)

4.5.7.1 Traveling with a load (pick and carry) is not recommended as a means of transporting loads from one location to another on a site and should be used as a last resort.

- Flatbed trucks, transports, lift trucks, and/or trailers should be used to transport these loads.

4.5.7.2 Traveling with suspended loads entails many variables (e.g. the type of terrain, boom length, and momentum in starting and stopping). Therefore, it is impossible to formulate a single standard with any assurance of safety. Thus, when traveling with a load, the operator must evaluate the prevailing conditions and determine the applicable safety precautions. No matter what other precautions are taken, the manufacturers' guidelines shall not be exceeded.

4.5.7.3 Pick and carry operations are not allowed with all types of cranes. Before these operations are performed, the manufacturer's instructions shall be checked. The instructions must state that pick and carry operations are permissible.

4.5.7.4 Most crawler cranes allow pick and carry operation. When working with crawler type cranes, check and confirm if the 360° chart applies to pick and carry operations.

4.5.7.5 Avoid using the crane near 100% of the chart capacity for pick and carry operations to account for dynamic loading.

4.5.7.6 A designated person shall be responsible for each pick and carry operation. This person is responsible for making decisions about crane ratings, load position, boom location, ground support, travel route and speed of movement.

4.5.7.7 Pick & Carry General Rules

The following rules apply to pick & carry operations for all cranes:

- Always use trained signal persons, to give directions and watch for hazards. The signal person(s) shall watch for any obstructions including power lines.
- The orientation of the boom must be checked. Unless specified otherwise by the manufacturer, it should be over the front for an RT hydraulic crane, over the rear for a truck mount crane and over the idler for a crawler crane. In each case, the boom should be in line with the direction of travel.
- Maintain as short a boom length and as high a boom angle as possible. This will keep the load close to the crane.
- Pick and carry with a jib or boom extension erected is permitted only when specifically allowed by the manufacturer.
- The supporting surface must be even better for a pick and carry operation vs. a stationary lift. A moving load can pose more of a problem than a static load on soil. Remember: A level surface requirement still applies in every case.

- The manufacturer will usually specify a maximum speed for pick and carry operations expressed in feet per minute or miles per hour. The maximum travel speed should be no more than 2.2 mph (3.5 km/h). .If this speed is exceeded the crane is bearing a higher dynamic load than intended by the manufacturer.
- The load should be secured to the crane to snub load swing.
- It is best to travel toward the load. This way the operator can see both the load and the road ahead at the same time.
- Avoid sudden starting and stopping. When starting or stopping, inertia may cause the load to swing away from or into the crane causing stability issues.
- No person, other than the operator, shall ride on the machine during "pick and carry" operations.

4.5.7.8 Pick & Carry for Rough-Terrain Cranes

- Pick and carry charts for rough-terrain (RT) cranes are based on information about tire size, inflation and condition.
- The information on the chart must match the actual size of the tires on the machine. When reading the on-rubber chart for an RT crane, take special note of the proper tire inflation pressure.
- The condition of the tires on the crane must be checked. They should be in like-new condition, except for normal tread wear.
- Jibs, extensions and power-pin sections are usually not supposed to be erected or in use during pick and carry operations, especially on hydraulic cranes. Check the manufacturer's guide to see specifically what is and is not allowed before performing any of these operations.
- Unless the manufacturer specifies otherwise, engage the swing brake and house lock.
- The load must be secured to the crane, or tag lines must be used.
- Do not begin to travel until the outriggers are fully stowed (retracted).

4.5.7.9 For additional information with regard to Pick and Carry operations see Part 6 or Construction Manual 300 and the crane's operation manual.

4.5.8 Personnel Lifting

All lifting of personnel shall be in accordance with CMS-710-02-PR-02200 Suspended Work Platforms.

4.6 Crane Inspection, Testing and Maintenance

4.6.1 The Site Manager and the Site HSE Manager shall designate a Competent Person(s) to perform frequent and monthly inspections on site. The designation shall be made in writing and documentation of the Competent Person(s)' qualifications maintained on file.

4.6.1.1 All employees who have successfully completed the applicable Mobile Crane Safety Training Course and are in good standing can be considered as a competent/designated person.

4.6.2 Initial Inspection

4.6.2.1 Prior to initial use, all new and altered cranes must be inspected by a qualified person to verify compliance with the provisions of ASME B30.5.

- For cranes that arrive at site fully assembled, a minimum of a monthly inspection shall be performed by a competent person prior to using the crane.
- A copy of the current annual inspection and the crane's operation manual must be included with the crane.

- It is recommended that an independent third-party inspector inspect the crane when it has been completely dismantled, had extensive structural repairs or potentially damaged in an incident.

4.6.3 Regular Inspections

4.6.3.1 Frequent Inspections

- A written inspection at the beginning of each shift shall be performed using the Mobile Crane Inspection Form CMS-710-02-FM-01901 or equivalent.

4.6.3.2 Periodic Inspections

- A designated person(s) shall perform a written inspection for defects on monthly basis. The Mobile Crane Inspection Form CMS-710-02-FM-01901 or equivalent shall be used.
- Cranes idle for one (1) month but less than six (6) months shall have a monthly inspection prior to going into service.
- Cranes idle for more than six (6) months shall have an annual inspection prior to going into service.

4.6.3.3 Annual Inspections

- All cranes shall have a current annual inspection. A copy of this inspection shall be provided by the crane owner and accompany the crane when delivered to the site.
- While on site, this inspection shall occur at twelve (12) month intervals based on the date of the latest inspection.
- It is recommended that an independent third-party inspector perform annual crane inspections.

4.6.4 Load Testing

4.6.4.1 Cranes shall be load-tested only in accordance with the manufacturer's specifications, limitations and applicable ASME B30 standard.

4.6.4.2 No crane shall be overload tested without written approval from Corporate Construction Technology.

4.6.4.3 All load tests will be documented and the documentation shall be maintained in the Site HSE files.

4.6.4.4 No modifications or alterations to cranes shall be made without Corporate Construction Technology and the manufacturer’s or a crane qualified person’s written approval

4.6.5 Maintenance

4.6.5.1 A preventive maintenance schedule shall be established per manufacturer’s requirements.

4.6.5.2 Preventive maintenance records shall be completed and retained in the site’s maintenance files.

4.6.6 Maintenance Procedure

4.6.6.1 The following precautions shall be taken before performing maintenance on a crane.

- The crane shall be moved to a location where it will cause the least interference with other cranes and operations in the area.
- If a load is attached, it shall be landed.
- All controls shall be placed in the off position.
- A Job Safety Analysis (JSA) shall be completed and followed for the work to be performed.

- CB&I Lock Out/Tag Out procedure found in CMS 710-02-PR-01500 Control of Hazardous Energy shall be followed for all maintenance operations.
- Bleed pressure and hot liquid before performing maintenance or repairs.
- Do not service or repair moving parts on equipment while it is running.
- Properly block equipment or loads before repairing or maintaining equipment.
- All employees performing maintenance on crane above 6ft. (2m) when not protected by a guardrail system shall wear approved safety harness and be properly tied off.
- Only designated persons shall work on energized equipment.

4.6.6.2 After maintenance work is completed and before restoring the crane to normal operation:

- Guards shall be reinstalled
- Safety devices shall be activated
- Replaced parts and loose material shall be removed
- Maintenance equipment shall be removed

4.6.6.3 A functional test shall be performed by the operator and maintenance personnel after repairs have been completed to insure the crane is in proper working order.

4.7 Mobile Crane Safety Training Process

The mobile crane safety training process shall consist of three levels of training. The type and order of training is as follows:

- General Training - Trained
- Type Exam - CB&I Certified
- Functional Test - Qualified

4.7.1 General Training

4.7.1.1 All CB&I crane operators, and supervisors that are directly involved with mobile crane operation shall complete the Mobile Crane Safety Course general training.

4.7.1.2 CB&I riggers directly involved with mobile crane operations should complete the Mobile Crane Safety Course general training but as a minimum shall complete Basic Rigging Safety training.

4.7.1.3 Signal persons directly involved with mobile crane operations should complete the Mobile Crane Safety Course general training but as a minimum shall complete Crane and Derrick Signal Person Training.

- Personnel that have successfully completed equivalent training are exempt.

4.7.1.4 Operator trainees shall be actively pursuing the completion of the CB&I mobile crane safety training process.

- Trainees shall only operate under the direct supervision of a person that is trained, certified, and qualified to operate the crane.
- Trainees shall never operate in congested areas.
- Trainee status will remain in place until said trainee demonstrates proficiency in the operation and adequate working knowledge of the crane.
- Trainees must be clearly identifiable by either hard hat color, or a decal applied to the hard hat.

4.7.1.5 Subcontract operators that are trained, certified, and qualified as described in Section 4.1 of this procedure are exempt from this training.

4.7.1.6 Subcontract supervisors directly involved with crane activities are trained in accordance with the Federal, State and Local Government requirements, applicable ASME B30 requirements, equivalent to CB&I's program, are exempt from this training. However, subcontractor supervisors shall comply with and have access to the CB&I procedures relevant to these activities.

4.7.1.7 General training shall consist of approximately 12 to 16 hours of classroom training on mobile crane safety given by an authorized instructor.

- The course length is dependent upon the previous experience of the participants, language skills and class size.

4.7.1.8 Minimum Materials Required for General Training

- CB&I Construction Manual 300
- Sample load chart questions
- Suspended Work Platform Worksheet

4.7.1.9 Examination

- A written exam, covering topics discussed during the general training course, shall be given.
- The exam shall consist of a minimum of 25 questions and 5 general load chart questions.
- A score of 80% will be required to pass.
- Employees not achieving a score of 80% will be allowed one opportunity to retest.
- Retest is to be administered within 7 days of the initial test.
- If the employee is unsuccessful in the retest attempt, they shall be required to retake the Mobile Crane Safety Course in its entirety.

4.7.1.10 Documentation

- Documentation of this training as a minimum will consist of a copy of the course certificate of completion and the employee's completed exam shall be placed in their personnel file.
- Employees' information shall be entered into the HSE Management System Training Data Base.

4.7.1.11 General training is good for three (3) years.

4.7.1.12 After three (3) years, an employee can “test out” of attending the course by scoring 80% on the general exam administered by an authorized instructor.

- If unable to achieve 80%, the employee must attend the complete Mobile Crane Safety Course.
- An employee can only test out of the course once in a 6-year period.
- Documentation of “test out” shall be as a minimum the employee's completed exam shall be placed in their personnel file.
- Entry into the HSE Management System Training Data Base.

4.7.1.13 In addition, refresher training may be required if:

- The employee has been involved in a mobile crane accident or near-miss incident;
- The employee has been observed operating in an unsafe manner, or
- The employee has received an evaluation that reveals poor operating practices.

4.7.2 Operator’s Certification

The Mobile Crane Safety Course (General Training) shall be completed before the employee can be certified as an operator. Operators will be certified by crane types. An operator will remain certified for a crane type until his 3-year crane safety training anniversary date.

4.7.2.1 Mobile Crane Types

- Mobile Crane Type 1: All crawler cranes with telescopic boom
- Mobile Crane Type 2: All wheel-mounted cranes with telescopic boom and single control station
- Mobile Crane Type 3: All wheel-mounted cranes with telescopic boom and multiple control station
- Mobile Crane Type 4: All crawler-mounted cranes with lattice type boom
- Mobile Crane Type 5: All wheel-mounted cranes with lattice boom and multiple control stations
- Mobile Crane Type 6: All commercial truck-mounted cranes with telescoping booms
- NOTE: See Construction Manual 300 for description of Mobile Crane Types.

4.7.2.2 Operator's Mobile Crane Type Exam

- An operator's Mobile Crane Type Exam shall be administered for each crane type by an authorized instructor.
- The exam will contain a minimum of 10 general questions and 5 load chart questions for each crane type.
- A score of 80% is required for both the general questions and load chart questions.
- Documentation of the type test as a minimum shall include the employee's completed exam placed in their personnel file.
- Employees' information shall be entered into the HSE Management System Training Data Base.

- The operator will remain certified for a crane type until the 3-year Mobile Crane Safety Course (General Training) anniversary date.
- To remain certified, the operator must be employed by CB&I at least 6 months in a 12 month period. To be re-certified the operator must score 80% on the Mobile Crane Safety General Training test. If unable to achieve 80%, the crane operator must successfully complete the Mobile Crane Safety General Training Course.

4.7.3 Operator Qualification:

Operators will be qualified to specific mobile crane models by the functional test.

4.7.3.1 All operators must complete a functional test, using the Mobile Crane Functional Test Form (CMS-710-02-FM-01902), on all models, types and tonnage cranes they are to operate.

4.7.3.2 The operator will complete two load chart questions, using the cranes load chart, and record them on the Hoisting Log Form (CMS-830-17-FM-60002).

4.7.3.3 After completion of the functional test, attach the Mobile Crane Hoisting Log Form and load chart questions to Mobile Crane Functional Test Form and send to the district office or site HSE department.

4.7.3.4 In addition, the operator must complete a test of the crane's lifting functions with and without a load, including pre-lift precaution and set-up as part of the functional test.

4.7.3.5 An authorized instructor or crane safety-trained supervisor shall administer the functional test qualifying the operator on a specific crane.

4.7.3.6 Effective November 10, 2017, all crane operators operating on sites located within the U.S. or its protectorates are additionally required to be qualified or certified as described in 29 CFR 1926 Subpart CC.

4.7.3.7 Operator must show familiarity with the specific crane by completing a monthly inspection during the functional testing.

- The inspection shall be documented using Mobile Crane Inspection Form (CMS-710-02-FM-01901 or equivalent).
- Other materials needed to complete the inspection will be in Construction Manual 300 and the Manufacturer's Operations Manual.

4.7.3.8 Wallet Card

- The operator will be issued a Type A Wallet Card (CMS-710-02-FM-02801) indicating the certification to operate cranes for CB&I. Listed on the back of the card will be the TYPE or TYPES of cranes certified to operate. (Examples: Type 1 and Type 3.)

4.7.3.9 To Remain Qualified

- Qualification shall remain good on the model and tonnage crane as long as operator can show proof of operation.
- Proof of operation can be kept updated by completion of the Monthly Equipment Operator's Qualification Log (CMS-710-02-FM-01905).
- If one year expires since operating that specific manufacturer's model and tonnage crane, the operator will be required to retake the functional test for that crane model and tonnage.

4.7.4 Mobile Crane Instructor Training

4.7.4.1 Mobile Crane Instructor training shall consist of a one week (40-hour) course of classroom training.

4.7.4.2 This training will be conducted by an instructor authorized by the Senior VP of HSE.

- This authorized instructor must have helped with a minimum of one 40-hour Instructor Training Course and be experienced in conducting the Mobile Crane Safety Training General Course.

4.7.4.3 Mobile Crane Instructor Course Candidate

- The instructor course candidates shall have adequate background and proficiency to teach and instruct. Also, the candidate should have knowledge of CB&I and mobile cranes used in the construction industry.

4.7.4.4 Examination

- The candidate must demonstrate their knowledge and proficiency by achieving a score of 80% on the course exam.
- Satisfactory completion of this course will qualify a person to be an authorized instructor for mobile crane safety.
- This retest is to be administered within 7 days of the initial test.
- If the employee is unsuccessful in the retest attempt, they shall be required to retake the Mobile Crane Safety Instructor Course in its entirety.

4.7.4.5 Documentation

- Documentation of the instructor certification, as a minimum, will consist of a copy of the course certificate of completion and a copy of the candidate's completed exam and shall be placed in their personnel file.
- Instructors' information shall be entered into the HSE Management System Training Data Base.

4.7.4.6 Maintaining Instructor Certifications

- Instructor certification shall remain current as long as the instructor participates in training.
- If more than five (5) years has passed and the instructor has not participated in training, the instructor must attend the Instructors course.

4.8 Operator's Physical

4.8.1 All CB&I mobile crane operators shall receive a physical examination by a physician or other licensed health care professional (PLHCP) designated by CB&I every two (2) years or more frequently if the designated PLHCP deems it necessary.

4.8.2 The physical examination is a post-offer, pre-hire examination.

4.8.3 Operators shall meet the following physical qualifications:

4.8.3.1 Vision of at least 20/30 Snellen in one eye and 20/50 in the other eye, with or without corrective lenses;

4.8.3.2 Ability to distinguish colors, regardless of position, if color differentiation is required for operation;

4.8.3.3 Adequate hearing, with or without hearing aid, for the specific operation.

4.8.3.4 Evidence of a negative substance abuse test.

4.8.3.5 Evidence of physical defects or emotional instability which could render a hazard to the operator or others, or which in the opinion of the examiner could interfere with the operator's performance, shall be sufficient cause for disqualification.

- Specialized clinical or medical judgments and tests shall be required by a licensed public healthcare provider.

4.8.3.6 Evidence that an operator is subject to seizures or loss of physical control shall be sufficient reason for disqualification.

- Specialized medical evaluations shall be required to determine these conditions.

4.8.3.7 Operators and operator trainees should have good depth perception, field of vision, reaction time, manual dexterity, coordination, and no tendencies to dizziness or similar characteristics.

4.9 Resume

All operators will be required to complete a resume listing all crane training (CB&I or others), special schools, and all mobile cranes previously operated with CB&I and other companies.

4.10 Accountability

4.10.1 Personnel, specifically the Superintendent and Crane Operator performing hoisting activities, are accountable for ensuring that lifts are planned. Those who fail to adequately plan lifts and practice safe hoisting activities are subject to disciplinary action in accordance with the CB&I Constructive Discipline Action Program CMS-710-05-PR-00200 up to and including termination.

5.0 REFERENCES

ASME B30.5-2007	Mobile and Locomotive Cranes
Construction Manual 300	Mobile Crane Safety
Construction Manual 62	Rigging Safety
CMS-710-02-PR-01500	Control of Hazardous Energy
CMS-710-02-PR-02100	Lift and Rigging Safety
CMS-710-02-PR-02200	Suspended Work Platform
CMS-710-02-PR-05300	Extra Hazardous and Repair Work
CMS-710-05-PR-00200	Discipline Action Program
CMS-830-17-PR-60001	Lift, Rigging and Transport Plans
CMS-830-17-FM-60002	Hoisting Log Form
CMS-830-17-FM-60001	CB&I Lift Plans

6.0 TERMINOLOGY

Term	***Definition***
Annual Inspection	Yearly inspections by the manufacturer or manufacturer's designee. The manufacturer's designee can be a CB&I employee.
Assembly/Disassembly Supervisor	A person who meets the criteria for both a competent and qualified person with respect to crane assembly and disassembly operations
ASME	American Society of Mechanical Engineers
Certified	A trained supervisor, rigger or operator who has completed the Type test for the type of crane they are to operate.
Competent Person	A person that is capable of identifying existing and predictable hazards in the surroundings or working conditions, which are unsanitary, hazardous, or dangerous to employees, and who has authorization to take prompt corrective measures to eliminate them. As a minimum this person shall have successfully completed CB&I's Mobile Crane Safety general training, or equivalent for subcontractors.
Authorized Instructor	An individual who has successfully completed the 40-hour instructor training course.
Designated Person	A person selected or assigned by the employer's representative as being competent to perform specific duties.
Frequent Inspection	Daily or monthly intervals, by a designated person.
Functional Test	A test performed to evaluate the operator's ability to set up, inspect, and operate the mobile crane safely.
Hoisting Log	A form used to document routine lifts as defined in CMS-830-17-PR-60001.
Lift Plan	The information that defines the key elements of a load handing activity and the associated risks. Also where all necessary information has been gathered and reviewed in preparation for the load handing activity. The term "Lift Plan" applies to plans for all load movements both vertical and horizontal See form CMS-

	830-17-FM-60001
Load	The total weight on the crane. This includes the payload, rigging as well as any manufacturer specified deductions.
Load Moment Indicator (LMI)	A device that measures crane and load information and warns the operator when a dangerous situation is about to happen.
Operator Aids	Electronic or manual instruments or tools used by the operator to aid in safe operation of cranes. (Examples: LMI, load cell, anti-two-block device, and tape measure).
Payload	The item to be handled including its self-weight, attachments, saddles, temporary supports and bracing, piping and insulation, water or other contained materials. Payload does not include rigging weight or crane deductions.
Periodic Inspection	One to twelve month intervals, or as specifically recommended by the manufacturer or by a qualified person.
Push/Pull Pole	A tool designed to help facilitate 'hands-free' lifting. Their primary use is to retrieve tag lines hanging vertically down from the load so that personnel do not have to get too close to the suspended load. Their secondary use is to push and maneuver loads into the correct orientation /position for landing or guiding them into tight spaces while remaining hands-free / hands-off.
Qualified Operator	A trained and certified operator who has completed a functional test on the crane he/she is operating.
Qualified Person	A person who, by possession of a recognized degree in an applicable field or a certificate of professional standing, or by extensive knowledge, training, and experience, has successfully demonstrated the ability to solve or resolve problems relating to the subject matter and work.
Signal Person	The person directing the lifting operation by giving directions to the operator by the use of hand signals or voice communication (two-way radio). The signal person shall have no other duties during the lift.
Site	Any location, facility or project where CB&I is performing work. Sites may include, but are not limited to, laboratories, offices, shops, owned facilities, leased facilities and/or project sites.
Tag Line	A rope (usually fiber) attached to a lifted load for purposes of controlling the load.
Trained	A supervisor, rigger, signal person or operator who has attended or tested out of the Mobile Crane Training Course within the last 3 years.
Type Test	Written exam given to the operator to test his/her knowledge for a particular type of crane. (e.g. Type 1; All crawler cranes with telescopic boom)
Weathervaning	Wind induced rotation of a crane superstructure, when out-of - service, to expose minimal surface area to the wind.

7.0 EXHIBITS

Exhibit 7.1 CMS-710-02-FM-01901 – Mobile Crane Inspection Form

Exhibit 7.2 CMS-710-02-FM-01902 – Mobile Crane Operators Functional Test Form

Exhibit 7.3 CMS-710-02-FM-02801 – Type A Wallet Card Form

Exhibit 7.4 CMS-710-02-FM-01905 – Equipment Operator's Qualification Log

Exhibit 7.5 Required Crane Operation Hand Signals

Exhibit 7.6 CMS-720-01-FM-00020 – Business Glossary

Exhibit 7.7 CMS-720-01-FM-00021 – Technical Glossary

8.0 ATTACHMENTS

None

EXHIBIT 7.5 REQUIRED CRANE OPERATION HAND SIGNALS **PAGE 1 OF 3**

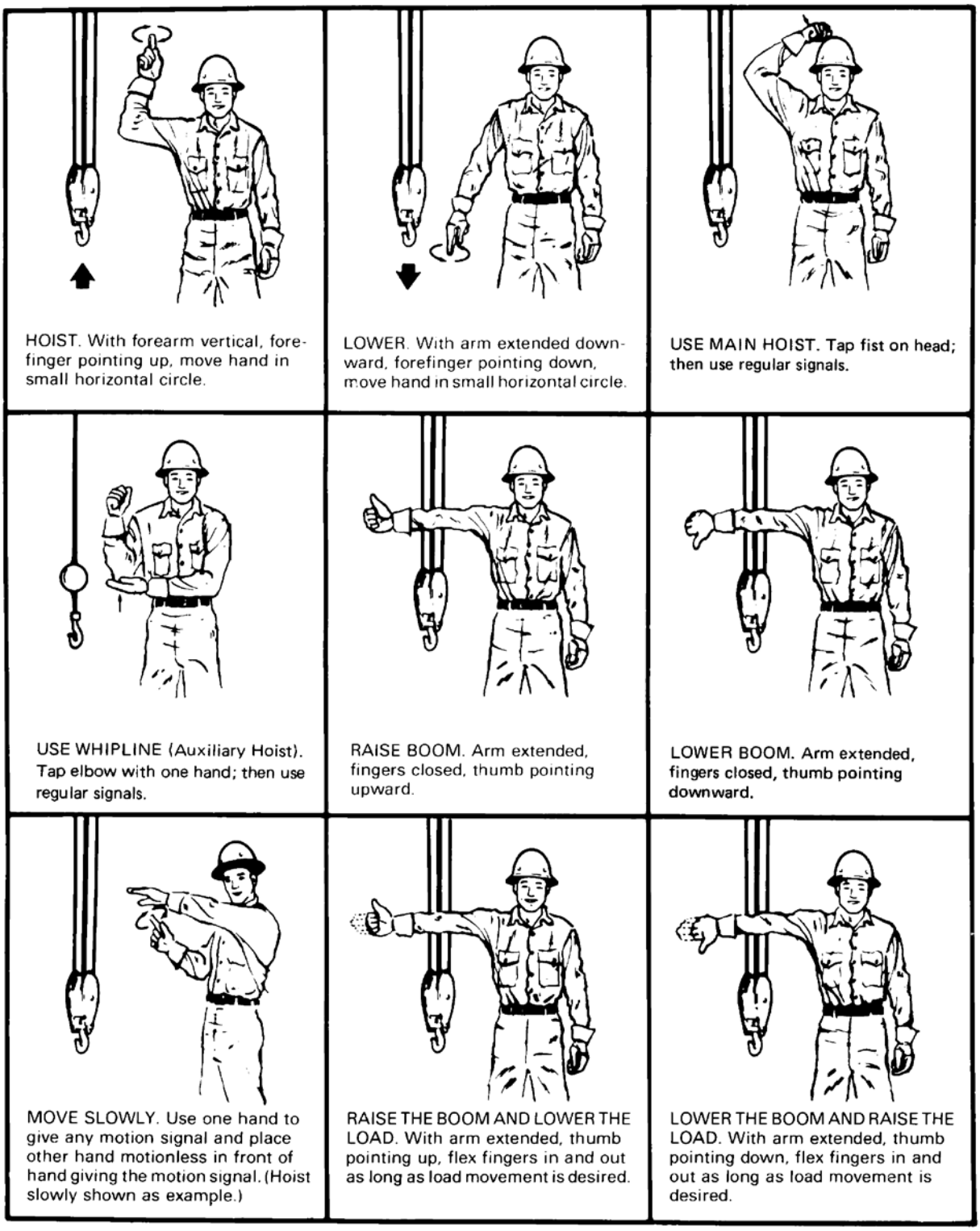

HOIST. With forearm vertical, forefinger pointing up, move hand in small horizontal circle.

LOWER. With arm extended downward, forefinger pointing down, move hand in small horizontal circle.

USE MAIN HOIST. Tap fist on head; then use regular signals.

USE WHIPLINE (Auxiliary Hoist). Tap elbow with one hand; then use regular signals.

RAISE BOOM. Arm extended, fingers closed, thumb pointing upward.

LOWER BOOM. Arm extended, fingers closed, thumb pointing downward.

MOVE SLOWLY. Use one hand to give any motion signal and place other hand motionless in front of hand giving the motion signal. (Hoist slowly shown as example.)

RAISE THE BOOM AND LOWER THE LOAD. With arm extended, thumb pointing up, flex fingers in and out as long as load movement is desired.

LOWER THE BOOM AND RAISE THE LOAD. With arm extended, thumb pointing down, flex fingers in and out as long as load movement is desired.

EXHIBIT 7.5 REQUIRED CRANE OPERATION HAND SIGNALS **PAGE 2 OF 3**

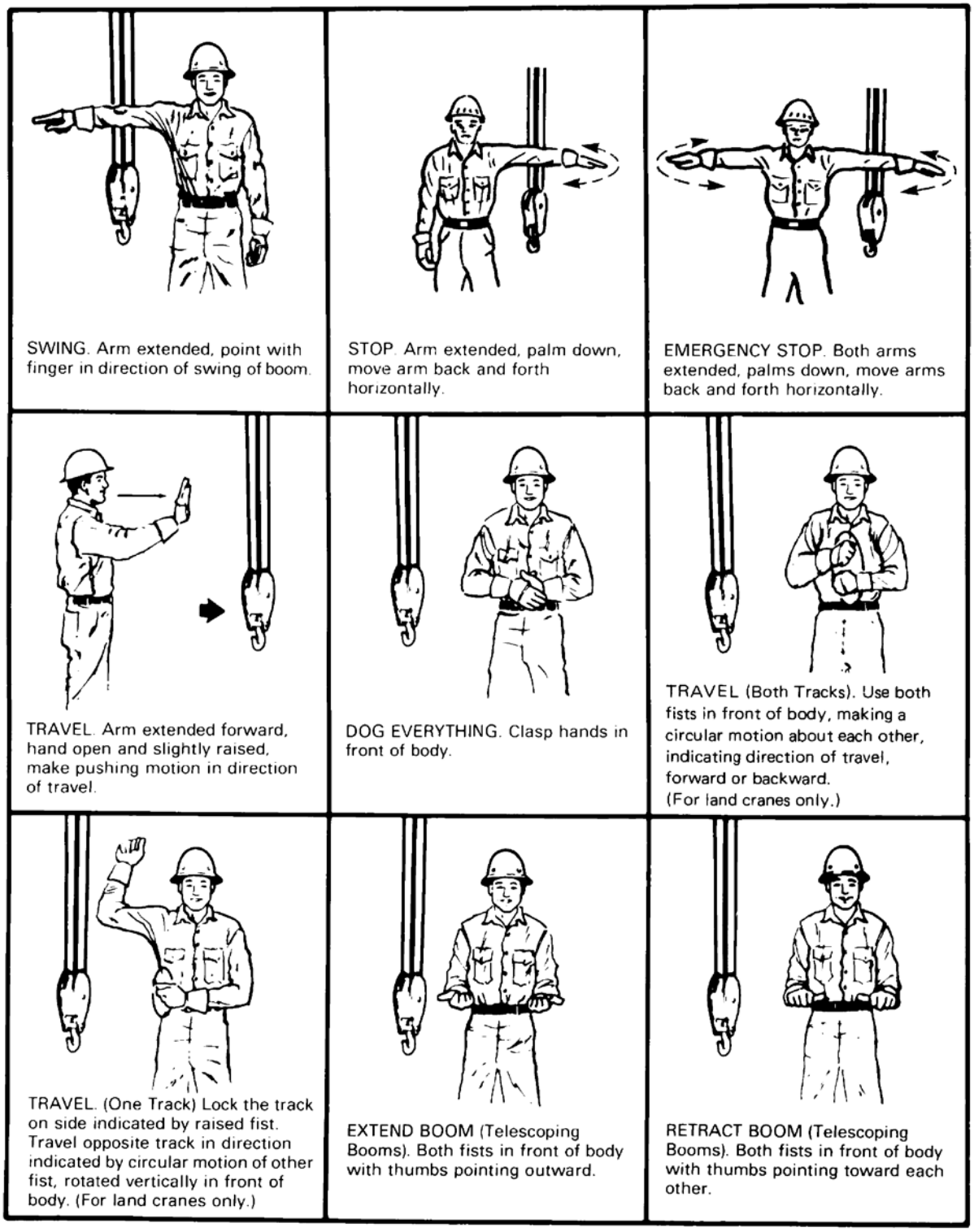

SWING. Arm extended, point with finger in direction of swing of boom.

STOP. Arm extended, palm down, move arm back and forth horizontally.

EMERGENCY STOP. Both arms extended, palms down, move arms back and forth horizontally.

TRAVEL. Arm extended forward, hand open and slightly raised, make pushing motion in direction of travel.

DOG EVERYTHING. Clasp hands in front of body.

TRAVEL (Both Tracks). Use both fists in front of body, making a circular motion about each other, indicating direction of travel, forward or backward. (For land cranes only.)

TRAVEL. (One Track) Lock the track on side indicated by raised fist. Travel opposite track in direction indicated by circular motion of other fist, rotated vertically in front of body. (For land cranes only.)

EXTEND BOOM (Telescoping Booms). Both fists in front of body with thumbs pointing outward.

RETRACT BOOM (Telescoping Booms). Both fists in front of body with thumbs pointing toward each other.

EXHIBIT 7.5 REQUIRED CRANE OPERATION HAND SIGNALS **PAGE 3 OF 3**

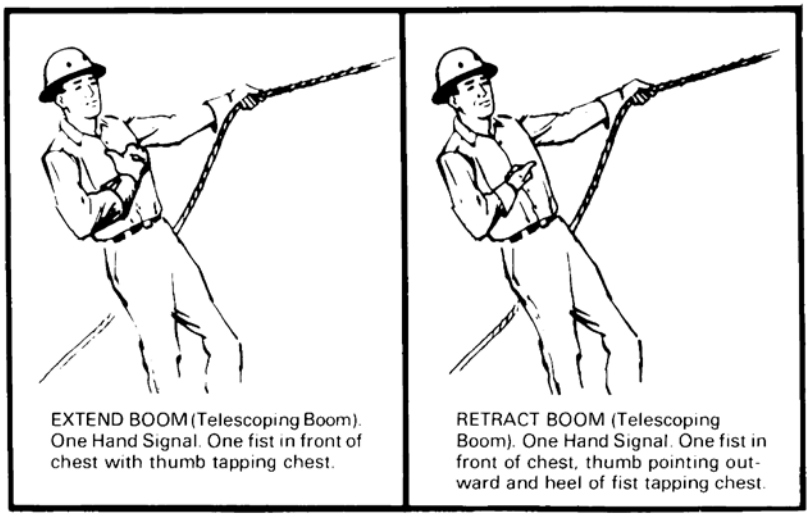

ATTACHMENT 10

CMS-710-01-PR-01700, CONFINED SPACES

PROCEDURE

Procedure Title:	**Confined Space Entry**	**CMS Number:**	**CMS-710-02-PR-01700**
Procedure Owner:	**HSE**	**Issuing Authority:**	**VP Global HSE**

CONFINED SPACE ENTRY

7	Issued for Use - Removed hyperlinks from document	LDJ	22 Oct 2014
6	Issued for Use	JPO	25 Nov 2013
5	Issued for Use – 4.6.3.5 & 7.0 Exhibits added reference to CMS-710-02-FM-01705 Hot Work Permit. (See Rev Bars)	JPO	27 Aug 2013
4	Issued for Use – Total re-write. (No Rev Bars)	JPO	20 Jun 2013
3	Issued for Use	JPO	20 Feb 2013
2	Issued for Use	JPO	13 May 2010
1	Issued for Use	JPO	7 Jan 2010
0	Issued for Use	JPO	01 Jul 2008
Rev	**Changes**	**Approved**	**Date**

"©Chicago Bridge & Iron Company, 2009. All Rights Reserved. For Internal Use Only.
NOTICE: THIS DOCUMENT, AND ALL TEXT, DRAWINGS, DETAILS AND DATA SHOWN HERETO, IS THE SOLE PROPERTY OF CHICAGO BRIDGE & IRON COMPANY, AND SHALL NOT BE REPRODUCED IN ANY MANNER, USED FOR ANY PURPOSE WHATSOEVER, OR RELEASED TO ANYONE EXCEPT BY EXPRESS WRITTEN PERMISSION OF CHICAGO BRIDGE & IRON COMPANY."

1.0 PURPOSE

The purpose of this procedure is to establish the minimum requirements for the use of Confined Space Entry on CB&I sites.

2.0 SCOPE

This procedure applies to all CB&I employees, contractors, subcontractors, and visitors associated with a CB&I site.

3.0 RESPONSIBILITIES

The following personnel have responsibilities defined in this procedure:

- CB&I Managers
- CB&I Supervisors
- CB&I Employees
- CB&I Contractors
- CB&I Subcontractors
- CB&I Visitors

4.0 PROCEDURE

Each site shall use this procedure to establish the minimum guidelines to create the site specific procedure for confined space entry.

4.1 Written Plan

4.1.1 A site-specific, written Confined Space Plan shall be developed that:

4.1.1.1 Designates what type of training shall be required

4.1.1.2 Identifies who shall be trained

4.1.1.3 Outlines rescue procedures

4.1.1.4 Identifies personnel and training requirements

4.1.1.5 Specifies precautions for types of confined spaces, i.e., newly arrived/constructed confined spaces versus used contaminated confined spaces, and any other pertinent issues involving confined space entry.

4.2 Records

4.2.1 Confined space permits which show the composition of an atmosphere to which and employee was actually exposed (even if the employee was using a respirator) are exposure records under 29 CFR 1910.20(c)(5) and are to be retained for 30 years. Conversely, if it is determined as a result of initial air sampling not to allow entry into a confined space until additional ventilation and purging of the atmosphere has occurred, the sampling would not be considered as exposure records because no employee would have ever been exposed to the atmosphere sampled and therefor need not be retained.

4.3 Confined Space Identification

4.3.1 Confined spaces shall be identified as they develop or arrive on site. A survey of the site shall be on-going to identify the confined spaces and to determine the hazards associated with each confined space, i.e., past and present uses, access, mechanical energy sources, pipelines, etc.

4.3.2 A "Danger - Confined Space" sign shall be used to identify a confined space and is to remain at the entrance to the confined space until site completion or confined space is sealed.

4.4 Confined Space Classification

4.4.1 A confined space

4.4.1.1 Is large enough and so configured that an employee can bodily enter and perform assigned work;

4.4.1.2 Has limited or restricted means for entry or exit (for example, tanks, vessels, silos, storage bins, hoppers, vaults, and pits are spaces that may have limited means of entry.); and

4.4.1.3 Is not designed for continuous employee occupancy.

4.4.2 Permit-Required Confined Space

4.4.2.1 The space must first meet all of the conditions listed in the 'Confined Space' section of this procedure.

4.4.2.2 Contains or has a potential to contain a hazardous atmosphere;

- Flammable gas, vapor, or mist in excess of 10 percent of its lower flammable limit (LFL);
- [1]Airborne combustible dust at a concentration that meets or exceeds its LFL;
- Atmospheric oxygen concentration below 19.5 percent or above 23.5 percent;
- Atmospheric concentration of any substance for which a dose or a permissible exposure limit is published in US OSHA 29 CFR 1910 Subpart G, Occupational Health and Environmental Control, or in Subpart Z, Toxic and Hazardous Substances and which could result in employee exposure in excess of its dose or permissible exposure limit;

4.4.2.3 Contains a material that has the potential for engulfing an entrant;

4.4.2.4 Has an internal configuration such that an entrant could be trapped or asphyxiated by inwardly converging walls or by a floor which slopes downward and tapers to a smaller cross-section; or

4.4.2.5 Contains any other recognized serious safety or health hazard.

4.4.3 Non-Permit Confined Spaces means a confined space that does not contain or, with respect to atmospheric hazards, have the potential to contain any hazard capable of causing death or serious physical harm.

4.4.4 Examples of Non-Permitted Confined Space[2]

4.4.4.1 Work inside a (existing) tank, having a door sheet installed would constitute the tank as being a Non-Confined Space, because the means of access or egress is not restricted.

4.4.4.2 Trenches and excavations less than 4 feet in depth

4.4.5 Typical examples of Permit-Required Confined Space common to CB&I work

---

1 This concentration may be approximated as a condition in which the dust obscures vision at a distance of 5 feet (1.52 m) or less.

2 Non-Permit Required Confined Spaces must be tested, as determined by a qualified person, during entry to ensure that ventilation is preventing the accumulation of a hazardous atmosphere. The frequency at which such atmospheric testing would have to be performed is dependent on the nature of the confined space and the results of the initial testing. If the initial testing found no evidence of flammable gases or vapors, and the space is not normally expected to present such hazards, no further testing is necessary. Atmospheric testing may be waived for non-permit confined spaces where it has been established through a formal hazard identification and evaluation study that no atmospheric hazards exist.

4.4.5.1 Painting inside of tanks when the vapor concentration exceeds the lessor of the STEL or excursion limit (3x TLV-TWA).

4.4.5.2 Hot-work of tank bottoms with nitrogen purge

4.4.5.3 Open-trenching or excavations deeper than 4'-0.

4.4.5.4 Tanks/Vessels not cleaned and gas freed

4.4.5.5 Isolation method(s) not possible

4.5 Training

4.5.1 Employees shall receive awareness training regarding confined spaces. All employees training shall be entered into CB&I's Data Management System and the record will be kept for a minimum of 2 years (CMS-710-02-FM-01704 Confined Space Wallet Card).

4.5.2 Affected employees (entrants, attendant, rescuers, supervisors, monitoring/evaluating personnel, etc.) shall be trained in aspects of the written plan that affect them. Training shall be documented. Entrants shall be trained in self-rescue. Non-Permit Required Confined Spaces do not require the use of an Attendant or the immediate availability of a Rescue Team.

4.5.3 Individuals entering Confined Spaces shall be provided with training. This training shall include a general confined space entry class and a specific pre-task review of any hazards identified for that space, a discussion of the work assignment and any control measures necessary for accomplishing the task in a safe manner.

4.5.4 Individuals entering confined spaces that have the potential for a hazardous atmosphere, materials that might engulf an entrant, a configuration that might trap an entrant or any other recognized hazard shall be provided with formal Confined Space Training. Training shall be developed for Authorized Entrants, Attendants, Entry Supervisors and Rescue/Emergency Service Personnel, and shall meet the requirements of 29 CFR Part 1910.146 (g)(1)-(4) and cover the duties outlined in 1910.146 (h)-(k).

4.5.5 Individuals conducting atmospheric monitoring shall be trained in the proper use and calibration of the monitoring equipment and documentation of the monitoring results.

4.5.6 Each employee shall be trained before initial assignment, prior to a change in assigned duties, if a new hazard has been created, or special deviations have occurred.

4.5.7 The training shall establish employee proficiency in the duties required by this section and shall introduce new or revised procedures, as necessary, for compliance with this practice.

4.6 Entry Practice

4.6.1 Safe Work Permit and Confined Space Entry Tag

4.6.1.1 A hazard assessment shall be performed and documented on the Safe Work Permit (CMS-710-02-FM-01701) prior to entry. The supervisor in charge of the work shall schedule this action.

4.6.1.2 A customer confined space entry permit shall meet the requirements of the CB&I "Safe Work Permit", at a minimum.

4.6.1.3 Confined space entry permits are good for one shift maximum 12 hours only.

4.6.2 Atmospheric Monitoring

4.6.2.1 A Competent Person, prior to entering the Confined Space, shall test the internal atmosphere prior to activation of any mechanical ventilation.

4.6.2.2 An attendant shall be assigned to the confined space when the individual performing atmospheric monitoring is inside, in addition to other precautions necessary for the particular space.

4.6.2.3 The atmospheric testing shall be performed with a calibrated direct-reading instrument.

4.6.2.4 Instrument calibration (according to the manufacturer's instructions for zero calibration and span check) shall be conducted and documented each day the direct-reading instrument is used.

4.6.2.5 An employee carrying out work in a confined space must not be exposed to an airborne contaminant in the space that exceeds the exposure limit (if any) for that contaminant.

4.6.2.6 In order to account for the potential layering of contaminants in a confined space, the entire depth and width of the space shall be monitored.

4.6.2.7 The atmosphere shall be monitored for the following conditions in the order given:

- Oxygen content (19.5-23.5% by volume),
- Flammable gases and vapors,
- Potential toxic air contaminants.

4.6.2.8 The monitoring results must be recorded on the Safe Work Permit and the Confined Space Entry Tag. (CMS-710-02-FM-01702) Copies of any confined space entry permit will be kept until the work is completed.

4.6.2.9 For non-permitted spaces there may be no hazardous atmosphere within the space whenever any employee is inside. (Exception: in emergency maintenance/rescue situations, the atmosphere shall be considered IDLH, appropriate protective measures taken and applicable PPE worn.)

4.6.2.10 If tests indicate that the atmosphere is unsafe, the confined space shall be ventilated until the hazardous atmosphere is removed, before employee entry. The ventilation required shall be noted in the special “Precaution” section of the Safe Work Permit.

4.6.2.11 The atmosphere within the space shall be periodically tested as necessary (minimally every 4 hours) to ensure that the continuous forced air ventilation is preventing the accumulation of a hazardous atmosphere.

4.6.2.12 If, after ventilating the space, tests indicate a hazardous atmosphere, no person will be allowed to enter unless equipped with an approved airline respirator equipped with an escape bottle or a self-contained breathing apparatus, safety harness, lifeline and mechanical ventilation. Such entries shall be made only during emergency situations and the number of workers participating shall be kept to a minimum. These requirements are not inclusive of flammable atmospheres. Personnel shall not enter confined spaces with flammable atmospheres.

4.6.3 Fire Prevention/Protection

4.6.3.1 Precautions shall be taken to prevent fires inside of confined spaces.

4.6.3.2 The need for a fire watch inside the confined space shall be evaluated and if needed one shall be assigned.

4.6.3.3 Oxygen, acetylenes, and other pressurized cylinders shall not be allowed inside of confined spaces.

4.6.3.4 No smoking or tobacco products shall be allowed in confined spaces. Butane or other types of cigarette lighter are not allowed in confined spaces.

4.6.3.5 The issuance of a Hot Work Permit (CMS-710-02-FM-01705 or equivalent) may also be required based on the scope of work.

4.6.4 Piping/Vessel System Check

Energized piping systems shall be locked, blocked and tagged to isolate contaminants and energy in accordance with CMS-710-02-FM-05302 Isolation of Structures and Pipelines.

4.6.5 Electrical Safety Check

Electrical energy sources shall be isolated and employee's protected against potential electrical sources.

4.6.6 Special Precautions

4.6.6.1 Communication requirements shall be evaluated during the hazard assessment. If an attendant is required, constant two-way communication shall be maintained between entrants and the attendant.

4.6.6.2 CMS-710-02-WI-01701 along with the requirements in this procedure shall be followed when cleaning tanks and vessels as required.

4.6.6.3 Low voltage, GFCI controlled or intrinsically safe lighting is required in metal tanks/vessels and in other confined spaces with flammable atmospheres. If GFCI's are used on lights for confined space entry, backup lighting shall be immediately available in case the GFCI trips.

4.6.6.4 In potentially explosive or flammable atmospheres, non-sparking tools shall be used. Smoking, open flames, and cutting or welding is prohibited in these situations.

4.6.6.5 Continuous air monitoring, safety harnesses, and lifelines shall be required when the activities inside the confined space (such as cutting and welding, distributing accumulated sludge, or use of solvents) may produce a hazardous atmosphere; even if the initial atmospheric tests indicate a safe atmosphere.

4.6.6.6 As a minimum, an Attendant is required for all entries. Work in confined space involving any energy isolation, potential or actual hazardous atmosphere, engulfment, or entrapment, may also have additional requirements (CMS-710-02-FM-01703 Standby Attendant Instruction and Entry/Exit Log).

4.6.6.7 Personal Protective Equipment such as coveralls, impervious gloves, boots, respirators, and face and eye protection shall be used as required by the nature of the operation to be performed. MSDS sheets and owner process knowledge may provide a source of information for PPE requirements and selection.

4.6.6.8 Entrants shall wear a body harness with an attached lifeline secured to a fixed object outside the confined space unless there is written documentation on the safe work permit as to why it is more dangerous or impossible to do so.

4.6.6.9 In vertically accessed confined spaces, a mechanical hoisting device shall be immediately available for rescue. Where a confined space is accessed via a vertical descent, a mechanical hoisting device shall be immediately available to assist in emergency rescue of the entrant. Hoisting device

should be used for hoisting personnel only and shall not be used for the hoisting of equipment and tools.

4.6.6.10 All entry and exit openings must remain clear and unobstructed at all times.

4.6.7 Ventilation for Permit-Required Confined Space Entry

4.6.7.1 The forced air ventilation shall be so directed to ventilate the immediate areas where an employee is or will be present within the confined space and shall continue until employees have left the confined space;

4.6.7.2 The air supply of the forced air ventilation shall be from a clean source that does not increase the hazards in the space.

4.6.7.3 Ventilation smoke tubes shall be used to generate a visible smoke cloud in the confined space. This smoke shall be introduced into the space after the ventilation system has been set up so that the efficiency of the ventilation may be evaluated. If the "smoke test" indicates that the ventilation set up is not effective in carrying contaminants out of the confined space, the ventilation shall be rearranged and the smoke test repeated. This process shall be continued until the appropriate ventilation configuration has been established. Alternative means of validating adequacy of ventilation (i.e., anemometers, etc.) may be used only with express and documented approval of the Business Sector HSE Manager.

4.6.7.4 Exhaust fans should be used to provide local exhaust ventilation venting the fumes outside of the confined space during some tasks i.e., welding, and grinding. The hood/snorkel shall be located as close as possible to the point of generation of the fume or dust. As work progresses the hood/snorkel shall be moved in order to remain within inches of the work.

4.6.7.5 In some cases, it may be desirable to have exhaust fans located away from the work area. A supply of flexible hose may be attached to the suction end of the air mover and then be placed in the confined space to draw contaminants out of the space. Again, the efficiency of this set up shall be evaluated with a smoke test to ensure that contaminants are being pulled out of the space.

4.6.7.6 Ventilation shall consist of a pre-entry purge of several air changes, followed by additional air monitoring, and then continuous introduction of fresh air during occupancy. Ventilation method shall draw air from the confined space.

4.6.7.7 Ventilation devices shall not be mounted or directed into the same manway or entry point used by entrants for access/egress or the primary location for the attendant.

4.6.7.8 Any contaminant found within the atmosphere of the confined space must be removed through purging or ventilation. Concentrations of pure oxygen or gas mixtures with oxygen greater than 21% by volume must not be used for purging or ventilation of any airborne contaminant in the confined space.

4.6.7.9 Assuming the active generation of air borne contamination has been stopped, the following equation shall be used to determine the minimum amount of time required to purge air contaminants to acceptable levels. This calculation shall be performed for each air borne contaminant present and the longest purge time calculated will be used as the minimum purge time for the confined space.

$$\text{Purge Time} = -\left(\left(\ln\left(\frac{C_2}{C_1}\right) * \left(\frac{V}{Q'}\right)\right) * SF\right)$$

ln-the natural logarithm

Q'—the effective flow rate of dilution air (cfm)

V—the room volume (ft^3)

C_1—initial concentration of air contaminants (ppm/10^6)

C_2—final concentration ((exposure limit (ppm)/10^6)/2)

SF—safety factor (minimum of 2)

4.6.8 Additional Training

A Competent Person shall conduct a review to determine if there are additional training requirements needed. The training might include hazard communication; powder actuated tools, hearing conservation, respiratory protection, etc.

4.6.9 Hazards of near-by Areas

A Competent Person shall evaluate hazards of near-by areas. These hazards might include water run off, vehicle traffic, outside contaminants (exhaust emissions, pop-off valves, etc.), overhead work, etc. The competent person shall also be aware of any changing condition that might impact the confined space.

4.6.10 Rescue Plan

4.6.10.1 The Rescue Plan shall be developed by a Competent Person and shall include provisions for training, practice drills, body harnesses, life lines, hoisting equipment, communications, response ability, etc. as needed. Client provided plans shall be reviewed by a competent person for use during any CB&I confined space entry.

4.6.10.2 Self-rescue and non-entry rescue shall be the rescue method of choice when ever possible.

4.6.10.3 Only trained personnel shall attempt rescue. Training shall include

- Proper use of personal protective equipment
- Proper use of rescue equipment
- Current certification in first aid and CPR
- Blood-borne pathogens
- The same training as the authorized entrants
- Non-entry rescue techniques
- Rescue training on the types of rescues they will be expected to perform
- The rescue personnel shall be retrained in aspects of rescue at least annually.

4.6.10.4 The Safe Work Permit shall be posted at the confined space entrance while employees are working in the confined space.

4.6.11 Equipment

4.6.11.1 A direct reading instrument that measures the percentage of the LEL and oxygen concentration simultaneously is recommended. Other atmospheric monitoring equipment shall be used for monitoring other known gases such as hydrogen sulfide, sulfur dioxide, etc., which may be present in confined spaces (tanks, vessels, etc.) as needed. Where applicable, refer to owner or client for specific atmospheric testing requirements.

4.6.11.2 If required then a self-contained breathing apparatus (SCBA) or a TYPE-C supplied-air respirator with an escape bottle (10-minute) shall be used in atmospheres Immediately Dangerous to Life and Health (IDLH) and/or confined space rescues.

4.6.11.3 Harness and lifelines: A harness shall be capable of retrieving an inert body in an upright position. A parachute-type harness with a single lifting ring attached to the upper back, or with duel lifting rings attached to the

shoulder straps, is required for confined space that have recognized hazards or a vertical entry of over five feet.

4.6.11.4 Ventilation: A portable blower shall be used to ventilate the space when atmospheric monitoring or the work to be done in the space indicates an actual or potential hazardous atmosphere.

4.7 Maintenance of Equipment

4.7.1 The Construction HSE Manager or designee shall maintain and ensure calibration of combustible gas/oxygen meters, which must be readily available.

4.7.2 A Competent Person shall inspect rescue equipment each quarter or more frequently if required. The inspection shall be documented by colored tape on the equipment (see CMS-710-02-FM-00502 Monthly Color Code).

4.8 Multiple Employer Entry

4.8.1 Procedures shall be developed to coordinate entry operations when employees of more than one employer, in addition to CB&I, are working simultaneously as authorized entrants in a confined space, so that employees of one employer do not endanger the employees of any other employer.

4.8.2 At a minimum, in addition to complying with the confined space requirements of this procedure, each employer who is to perform confined space entry operations with CB&I personnel shall:

4.8.2.1 Obtain any available information regarding confined space hazards and entry operations from CB&I.

4.8.2.2 Coordinate entry operations with CB&I, when both CB&I personnel and subcontractor personnel will be working in or near confined spaces as required.

4.8.2.3 Inform CB&I of the confined space program that the subcontractor will follow and of any hazards confronted or created in confined spaces, either through a debriefing or during the entry operation.

4.9 Entrants Shall:

4.9.1 Know the hazards that may be faced during entry, including information on the mode, signs or symptoms, and consequences of the exposure.

4.9.2 Properly use equipment as required by this procedure.

4.9.3 Communicate with the attendant as necessary to enable the attendant to monitor entrant status and to enable the attendant to alert entrants of the need to evacuate the space as required.

4.9.4 Alert the attendant whenever:

4.9.4.1 The entrant recognizes any warning sign or symptom of exposure to a dangerous situation, or

4.9.4.2 The entrant detects a prohibited condition; and

4.10 Exit from the permit space as quickly as possible whenever:

4.10.1.1 An order to evacuate is given by the attendant or the entry supervisor,

4.10.1.2 The entrant recognizes any warning sign or symptom of exposure to a dangerous situation,

4.10.1.3 The entrant detects a prohibited condition, or

4.10.1.4 An evacuation alarm is activated.

4.11 Attendants shall:

4.11.1 Know the hazards of the specific confined space,

4.11.2 Be aware of possible behavioral effects of exposure to the hazards by the entrants,

4.11.3 Maintain a constant, accurate count of authorized entrants in the confined space,

4.11.4 Remain outside the confined space as long as entrants are in the confined space,

4.11.5 Maintain communication with the entrants via radio, voice, or other means,

4.11.6 Monitor conditions inside and outside the confined space to insure it is safe for the entrants to remain in the confined space,

4.11.7 Require evacuation of the confined space when conditions warrant evacuation,

4.11.8 Summon rescue and emergency personnel when needed,

4.11.9 Never allow unauthorized personnel into a confined space.

4.11.10 Attendants may be assigned to monitor more than one permit space provided the duties described in practice can be effectively performed for each permit space that is monitored. Likewise, attendants may be stationed at any location outside the permit space to be monitored as long as the duties described in this practice can be effectively performed for each permit space that is monitored.

4.11.11 Assignment of attendants to monitor more than one permit space requires the written approval of the Construction HSE Manager.

4.12 Entry supervisor shall:

4.12.1 Knows the hazards that may be faced during entry, including information on the mode, signs or symptoms, and consequences of the exposure;

4.12.2 Verify by checking the appropriate entries have been made on the permit, all tests specified by the permit have been conducted and all procedures and equipment specified by the permit are in place before endorsing the permit and allowing entry to begin;

4.12.3 Terminates the entry and cancels the permit as required by this practice;

4.12.4 Verify that rescue services are on-site while the work is being performed and the means for summoning them are operable;

4.12.5 Removes unauthorized individuals who enter or who attempt to enter the permit space during entry operations; and

4.12.6 Determine whenever responsibility for a permit space entry operation is transferred and at intervals dictated by the hazards and operations performed within the space, entry operations remain consistent with terms of the entry permit and acceptable entry conditions are maintained.

4.13 Program Review

4.13.1 The site confined space entry program shall be re-evaluated by the Construction Manager, the Construction HSE Manager, and members of the safety committee after any failure of the process and at least annually. The review shall be documented.

4.14 Specific Requirements

4.14.1 Pipe fabrication and Permit Required Confined Spaces

4.14.1.1 The fabrication of pipe and pipe spools or other structures/equipment can create a confined space or a permit required confined space at some point in the fabrication process because of difficulty of entering/exiting or a hazardous environment resulting from the work being performed. When employee are required to enter such spaces to perform assigned tasks those spaces must be evaluated by the site HSE Manager or designee and the site General Manager or designated competent person to decide if due to the assigned work to be performed special precautions and/or a permit is required. Such evaluation will be documented and if the two individuals cannot agree otherwise the space must be classified as a Permit Require Confined Space. Entry into the space where welding, purging, arc gouging, etc. was performed must be re-evaluated in accordance with confined space entry procedures. If work to be done is welding, purging, arc gouging, etc. the confined space will be classified as a Permit Required Confined Space and signage posted accordingly (CMS-710-02-FM-01702 Confined Space Entry Tag).

5.0 REFERENCES

29 CFR (Code of Federal Regulations) Part 1910.146	Confined Space
CMS-710-02-FM-01703	Standby Attendant Instruction and Entry/Exit Log
CMS-710-02-FM-01704	Confined Space Attendant Wallet Card
CMS-710-02-WI-01701	Tank/Vessel Cleaning Operations

6.0 TERMINOLOGY

Term	***Definition***
Attendant	An individual stationed outside of a confined space assigned to monitor the confined space entry process and to perform the attendant's duties.
Acceptable Entry Conditions	The conditions that must exist in a permit space to allow entry and to ensure that employees involved with a permit-required confined space entry can safely enter into and work within the space.
Blanking or Blinding	The absolute closure of a pipe, line, or duct by the fastening of a solid plate (such as a spectacle blind or a skillet blind) that completely covers the bore and that is capable of withstanding the maximum pressure of the pipe, line, or duct with no leakage beyond the plate.
Calibration (for atmospheric monitoring equipment)	A process by which one documents that the atmospheric monitoring equipment is working properly and giving accurate readings. The process involves zeroing the instrument and a span check.
Combustible Material	Liquids, solids, or gases that are relatively difficult to ignite (140 degrees F. or more) and that burn relatively slowly (such as

	paper, wood, etc.)
Competent Person	One who is capable of identifying existing and predictable hazards in the surroundings or working conditions which are unsanitary, hazardous, or dangerous to employees, and who has authorization to take prompt corrective measures to eliminate them.
Confined Space	A space that: • Is large enough and so configured that an employee can bodily enter and perform assigned work; and • Has limited or restricted means for entry or exit (for example, tanks, vessels, silos, storage bins, hoppers, vaults, and pits are spaces that may have limited means of entry.); and • Is not designed for continuous employee occupancy (Continuous employee occupancy defined as “Employees are meant to work on a daily basis, including the provision of adequate ventilation to preserve human life and health.) The space may also be subject to the accumulation of toxic or flammable contaminants or the development of an oxygen-deficient atmosphere, have the potential to engulf an entrant, have the potential to entrap an entrant, or have some electrical, mechanical or other physical hazard present. Confined spaces include, but are not limited to, storage tanks, bins, boilers, ventilation ducts, sewers, underground utility vaults, tunnels, pipelines, and open-top spaces more than four feet in depth, such as pits, vaults, trenches, excavations, sumps, vessels, drained swimming pools, etc
Double Block and Bleed	The closure of a line, duct, or pipe by closing and locking or tagging two in-line valves and by opening and locking or tagging a drain or vent valve in the line between the two closed valves.
Emergency	Any occurrence (including any failure of hazard control or monitoring equipment) or event internal or external to the permit space that could endanger entrants.
Engulfment	The surrounding and effective capture of a person by a liquid or finely divided (flowable) solid substance that can be aspirated to cause death by filling or plugging the respiratory system or that can exert enough force on the body to cause death by strangulation, constriction, or crushing.
Entrapment	A person becoming trapped because of the configuration of the confined space, i.e., a hopper.
Entrant	The employees who have been trained and authorized to enter a particular confined space.
Entry	The action by which a person passes through an opening into a permit-required confined space. Entry includes ensuing work activities in that space and is considered to have occurred as soon as any part of the entrant's body breaks the plane of an opening into the space.
Entry Permit (permit)	The written or printed document to allow and control entry into a permit space and that contains the information specified in paragraph (f) of this section.

Entry Supervisor[3]	The person (such as the foreman, or crew chief) responsible for determining if acceptable entry conditions are present at a permit space where entry is planned, for authorizing entry and overseeing entry operations, ensuring that training requirements have been completed, and for terminating entry as required by this section.
Hazard Assessment	The process of evaluating a confined space to determine what safety precautions are required for safe entry. The hazard assessment is documented on the Safe Work Permit/Confined Space Entry Permit.
Hazardous Atmosphere	An atmosphere that exposes employees to a risk of death, incapacitation, injury, or acute illness. It may be caused by one or more of the following conditions: • An atmospheric oxygen concentration below 19.5 percent (an oxygen- deficient atmosphere) or above 23.5 percent (an oxygen-enriched atmosphere) by volume • A flammable gas, vapor, or mist in excess of 10 percent of its Lower Explosive Limit (LEL) • A hydrogen sulfide gas concentration above 10 parts per million • A carbon monoxide gas concentration above 35 parts per million • An airborne combustible dust[4] at a concentration as defined in the applicable Material Safety Data Sheets • Presence of any acutely hazardous substance in an atmospheric concentration[5] above the Permissible Exposure Limits (PEL) published in Subpart D of 29 CFR 1926.55. If a contaminant is not published in Subpart D, consult Material Safety Data Sheets, or other authoritative sources • Any atmospheric condition[6] recognized as Immediately Dangerous to Life or Health (IDLH) as specified by the National Institute of Occupational Safety and Health (NIOSH).
Hot Work Permit	The projects written authorization to perform operations (for example, riveting, welding, cutting, burning, and heating) capable of providing a source of ignition.
Immediately Dangerous to Life	Any condition that poses an immediate or delayed threat to life or

[3] An entry supervisor also may serve as an attendant or as an authorized entrant, as long as that person is trained and equipped as required by this section for each role he or she fills. In addition, the duties of entry supervisor may be passed from one individual to another during the course of an entry operation.

[4] As a general rule this concentration may be approximated as a condition in which the dust obscures vision at a distance of 5 feet (1.52 m) or less.

[5] An atmospheric concentration of any substance that is not capable of causing death, incapacitation, impairment of ability to self-rescue, injury, or acute illness due to its health effects is not covered by this provision.

[6] For air contaminants for which OSHA has not determined a dose or permissible exposure limit, other sources of information, such as Material Safety Data Sheets that comply with the Hazard Communication Standard, section 1910.1200 of this Part, published information, and internal documents can provide guidance in establishing acceptable atmospheric conditions.

or Health (IDLH)	that would cause irreversible adverse health effects or that would interfere with an individual's ability to escape unaided from a permit space.
Inerting	The displacement of the atmosphere in a permit space by a noncombustible gas (such as nitrogen) to such an extent that the resulting atmosphere is noncombustible.
Isolation	The process by which a permit space is removed from service and completely protected against the release of energy and material into the space by such means as: blanking or blinding; misaligning or removing sections of lines, pipes, or ducts; a double block and bleed system; lockout or tagout of all sources of energy; or blocking or disconnecting all mechanical linkages.
Line Breaking	The intentional opening of a pipe, line, or duct that is or has been carrying flammable, corrosive, or toxic material, an inert gas, or any fluid at a volume, pressure, or temperature capable of causing injury.
Non-Permit Confined Space	A confined space that does not contain or, with respect to atmospheric hazards, have the potential to contain any hazard capable of causing death or serious physical harm.
Oxygen Deficient Atmosphere	An atmosphere containing less than 19.5 percent oxygen by volume.
Oxygen Enriched Atmosphere	An atmosphere containing more than 23.5 percent oxygen by volume.
Permit-Required Confined Space (permit space)	A confined space that has one or more of the following characteristics: • Contains or has a potential to contain a hazardous atmosphere; • Contains a material that has the potential for engulfing an entrant; • Has an internal configuration such that an entrant could be trapped or asphyxiated by inwardly converging walls or by a floor which slopes downward and tapers to a smaller cross-section; or • Contains any other recognized serious safety or health hazard.
Prohibited Condition	Any condition in a permit space that is not allowed by the permit during the period when entry is authorized.
Rescue Service	The personnel designated to rescue employees from permit spaces.
Retrieval System	The equipment (including a retrieval line, chest or full-body harness, wristlets, if appropriate, and a lifting device or anchor) used for non-entry rescue of persons from permit spaces.
Site	Any location, facility or project where CB&I is performing work. Sites may include, but are not limited to, laboratories, offices, shops, owned facilities, leased facilities and/or project sites.
Span Check	A portion of the calibration procedure during which a gas mixture of known composition is passed over the sensors of the instrument and the instrument readings are verified. This is a distinct function within the calibration mode of most atmospheric monitoring instruments.

Testing	The process by which the hazards that may confront entrants of a permit space are identified and evaluated. Testing includes specifying the tests that are to be performed in the permit space.
Zero Calibration	A portion of the calibration procedure during which the meter response is observed in clean room air or while administering bottled zero grade air.

7.0 EXHIBITS

Exhibit 7.1	CMS-710-02-FM-01701 – Safe Work Permit Form
Exhibit 7.2	CMS-710-02-FM-01702 – Confined Space Entry Tag
Exhibit 7.3	Confined Space Determination Flow Chart
Exhibit 7.4	CMS-720-01-FM-00020 – Business Glossary
Exhibit 7.5	CMS-720-01-FM-00021 – Technical Glossary
Exhibit 7.6	CMS-710-02-FM-01705 – Hot Work Permit Form
Exhibit 7.7	CMS-710-02-FM-05302 – Isolation of Structures and Pipelines
Exhibit 7.8	CMS-710-02-FM-00502 – Monthly Color Code

8.0 ATTACHMENTS

None

EXHBIT 7.3 CONFINED ENTRY SPACE DETERMINATION FLOW CHART PAGE 1 OF 1

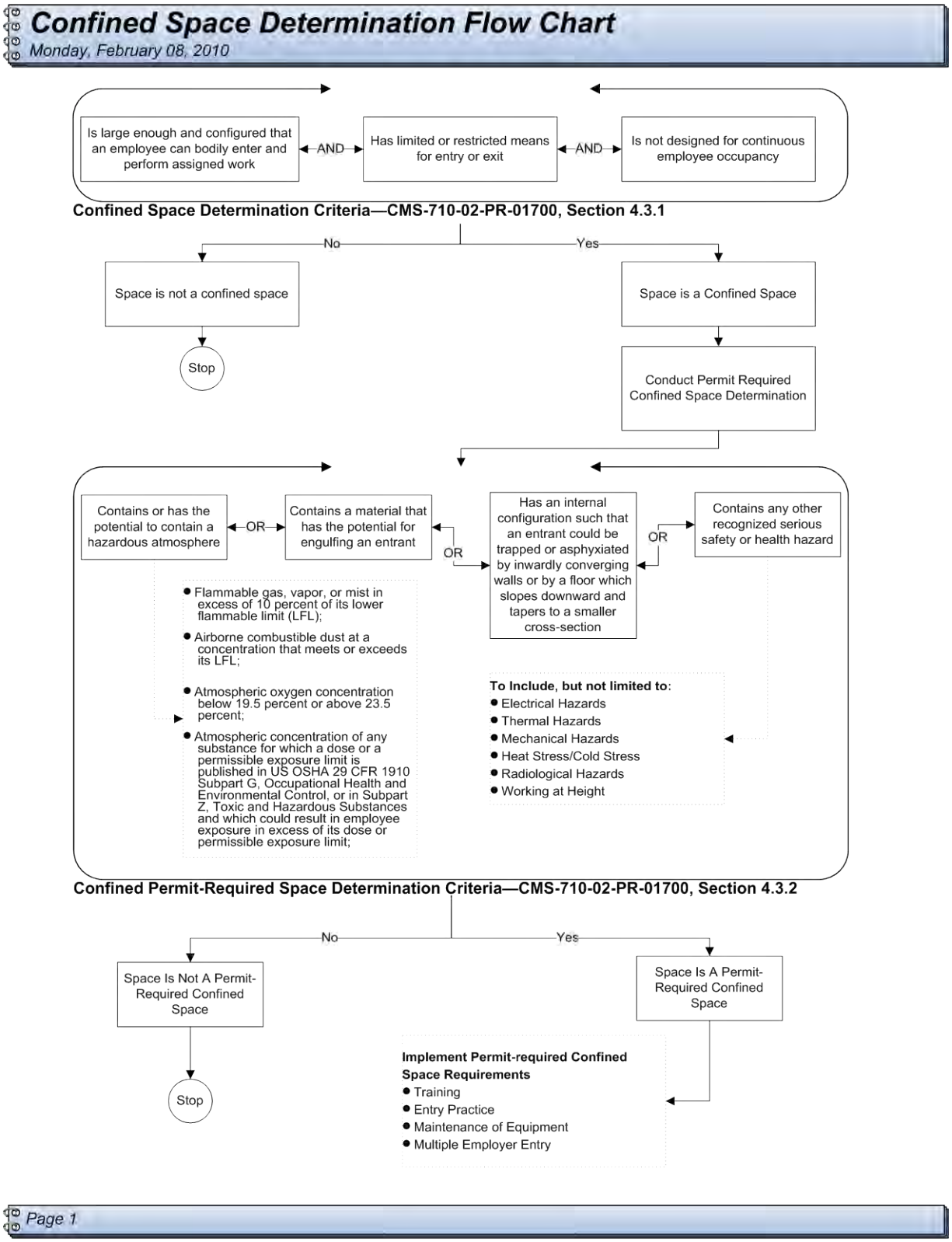

APPENDIX E

CONSTRUCTION QUALITY ASSURANCE PLAN

Construction Quality Assurance Plan
RSA-204, Oxidizer Facility, Building 7691
Operable Unit 10
U.S. Army Garrison-Redstone
Madison County, Alabama

Prepared for:

Mission & Installation Contracting Command
ATTN: MICC Center – FSH
2107 17th Street
Building 4197, Suite 15
Fort Sam Houston, Texas 78234-5015

Prepared by:

CB&I Federal Services LLC
2410 Cherahala Boulevard
Knoxville, Tennessee 37932

Contract Number W91ZLK-09-D-0006
CB&I Project No. 147104
Task Order 0008

September 2016

Approval/Signature Page

I have read and approve this Construction Quality Assurance Plan for the Corrective Measures Implementation Work Plan for RSA-204 at Redstone Arsenal, Madison County, Alabama with respect to project hazards, regulatory requirements, and CB&I procedures.

Project Name:	CB&I Project Number
Construction Quality Assurance Plan RSA-204 Redstone Arsenal	147104

Mark Shoemaker
Group 4 Cost Account Manager

9/22/16
Date

Table of Contents

Page

List of Tables iv
List of Attachments iv
1.0 Introduction 1-1
1.1 Overall Directive 1-1
1.2 Project Background 1-1
1.3 Objectives of the CQA Program 1-2
1.4 Presentation of the CQAP 1-3
2.0 Responsibility and Authority 2-1
2.1 CQA Organization and Key Elements 2-1
2.1.1 CB&I Cost Account Manager 2-1
2.1.2 Regulatory Oversight Agency (ADEM) 2-2
2.1.3 CB&I Site CQCSM 2-2
2.1.4 CQC Analytical Laboratory 2-2
2.1.5 CB&I and Subcontractors 2-3
2.1.6 CQC Personnel 2-3
2.2 Qualifications 2-3
2.3 CB&I Personnel Training 2-4
2.4 Communication Within the CQA Organization 2-5
2.5 CQA Meetings 2-5
3.0 Contract Scope of Work 3-1
3.1 Proposed Work Activities 3-1
3.2 CQC Requirements and Responsibilities 3-2
3.2.1 Preliminary Activities 3-2
3.2.2 ISEB Treatment 3-3
3.2.3 Soil Excavation and Confirmation Sampling 3-4
3.2.4 Backfilling 3-5
3.2.5 Impermeable Cap 3-6
3.2.6 Site Restoration 3-6
3.2.7 Final Inspection and Demobilization 3-7
3.2.8 Long-Term Monitoring 3-7
3.2.8.1 Groundwater Monitoring and Reporting 3-7
3.2.8.2 Cap and Land-Use Control Inspections 3-8
3.3 Additional Considerations 3-9

Table of Contents *(Continued)*

Page

4.0 Document Control 4-1
4.1 Documentation 4-1
4.2 Daily Construction Log 4-2
4.3 Records 4-2
4.3.1 Evidence of Contract Compliance 4-2
4.3.2 Storage of Field Records 4-3
4.4 Project Submittals 4-3
4.4.1 Document Submittal Register 4-3
4.4.2 Submittal Preparation and Transmittal 4-4
4.4.3 Resubmittals 4-4
5.0 Nonconformances and Corrective Actions 5-1
5.1 Nonconformance Report 5-1
5.2 Identification of Nonconforming Items 5-1
5.3 Nonconformance Tracking Register 5-1
5.4 Control and Segregation 5-2
5.5 Disposition 5-2
5.6 Documentation 5-2
5.7 Corrective Actions 5-2
5.8 Stop Work Notice 5-3
5.9 Conflict Resolution 5-3
6.0 Procurement Control 6-1
6.1 Introduction 6-1
6.1.1 Review of Procurement Documents 6-2
6.1.2 Source Evaluation and Selection 6-2
6.1.3 Acceptance of Services 6-2
6.1.4 Receipt Inspection and Verification 6-3
6.1.5 Handling, Storage, Packaging, and Shipping 6-3
6.2 Subcontractor Quality Control 6-3
6.3 Analytical Laboratory Services 6-4
6.3.1 Other Subcontractors 6-4
6.3.2 Subcontractor Noncompliance 6-4
7.0 Audits 7-1
7.1 Scheduling and Planning 7-1
7.2 Internal Performance Audits 7-1

Table of Contents *(Continued)*

Page

7.3 Execution of Audits 7-2
7.3.1 Pre-Audit Meeting 7-2
7.3.2 Audit 7-2
7.3.3 Exit Meeting 7-2
7.3.4 Audit Report 7-3
7.4 Response 7-3
7.5 Follow-Up 7-4
7.6 Documentation 7-4
8.0 Construction Inspections 8-1
8.1 Preparatory Inspections and Meetings 8-1
8.2 Initial Inspections 8-2
8.3 Follow-Up Inspections 8-2
8.4 Pre-Final Inspection 8-3
8.5 Final Inspection 8-3
8.6 Scheduled Inspections 8-4
8.7 Inspection Documentation 8-4
9.0 Analytical Testing 9-1
10.0 References 10-1
Tables
Attachments

List of Tables

Table	Title
4-1	Typical Daily Construction Log
5-1	Nonconformance Report
5-2	Nonconformance Report Tracking Register
5-3	Stop Work Notice
5-4	Stop Work Notice Log

List of Attachments

Attachment	Title
1	Field Inspection Checklist

1.0 Introduction

This Construction Quality Assurance Plan (CQAP) presents the overall program for construction quality assurance (CQA) to be implemented by CB&I Federal Services LLC (CB&I) during corrective measures implementation (CMI) activities at RSA-204. This document establishes a program to comply with requirements established in the CMI Work Plan and those of the Alabama Department of Environmental Management (ADEM). The scope of work for the project is detailed in the CMI Work Plan for RSA-204 to which this CQAP is an appendix.

1.1 Overall Directive

The procedures and practices set forth in the CQAP should be adhered to and specifically applied to all quality-related work on the project. It is the responsibility of all personnel performing work on the project to be familiar with and implement the technical requirements referenced in this CQAP or otherwise specified for the project, as included in the CMI Work Plan.

Conformance to the requirements of this CQAP will provide results that will verify that the contract, when completed, will conform to the specified requirements and will be documented by defensible evidence that the work performed meets or exceeds the standards set forth for the project.

1.2 Project Background

RSA-204 occupies 8.5 acres at the intersection of Eagle Road and Magazine Road in the southeastern portion of RSA in Test Area-10. The site is located in the northwestern portion of the RSA-146 groundwater unit. The site is designated as a part of Operable Unit 10, which included sites that had been potentially impacted by the historical use of the Redstone Arsenal Rocket Engine North Plant for rocket motor testing and production. Investigations of the rocket motor production and testing sites have demonstrated that releases from multiple sources resulted in extensive, commingled groundwater plumes containing elevated levels of trichloroethene (TCE), perchlorate, and explosives. Groundwater beneath RSA-204 (including the saturated zone soils) is a part of the larger RSA-146 groundwater unit. As discussed in the CMI work plan, TCE, perchlorate, and three explosive compounds (2,6-dinitrotoluene, 2-nitrotoluene, and RDX) in groundwater will be addressed by the RSA-204 surface media site.

The facility consists of existing Buildings 7687, 7688, 7689, 7690, and 7691, which the Army constructed in 1978 to support Thiokol Corporation operations. Oxidizer (ammonium perchlorate) was received at the service facility (Building 7687) and explosives (HMX and RDX) were dried at Building 7688. The oxidizer and explosives were transported to the grinding and processing facilities (Buildings 7689, 7690, and 7691), where they were screened and

ground. Following processing, the oxidizer powder was transported to mixing facilities outside of RSA-204. The entire operation was deactivated between 1993 and 1996. Further site background and history can be found in the Resource Conservation and Recovery Act (RCRA) facility investigation (RFI) report (Shaw Environmental, Inc., 2013a). Site maps are included in the CMI work plan.

The RFI report for RSA-204 was completed in 2013 (Shaw, 2013a), and the report was approved by ADEM in 2014. The report recommended corrective measures for perchlorate-contaminated soil and perchlorate-, TCE-, and explosives-contaminated groundwater at RSA-204. The perchlorate-contaminated groundwater poses a sourcing threat to groundwater, and future potable use of groundwater beneath RSA-204 poses an unacceptable threat to human health.

The proposed cleanup of the RSA-204 soil will not result in full unrestricted use of the site due to the expected presence of inaccessible perchlorate-contaminated soil above the cleanup goal (CG) adjacent to Building 7689. A cap and institutional controls in the form of land-use controls will be required for the localized cap area as part of these corrective measures and the future land use will be restricted to industrial. The Army has elected to perform corrective measures to remove and dispose of perchlorate-contaminated soils, construct an impermeable concrete cap adjacent to Building 7689, and treat the underlying groundwater at RSA-204, followed by monitored natural attenuation and long-term groundwater monitoring.

1.3 Objectives of the CQA Program

The objectives of the CQA program are to provide a system of procedures, practices, guidelines, and controls which, when implemented, will provide the confidence that project activities are accomplished in accordance with the specified contracts, design criteria, plans, drawings, and the CMI Plan developed during implementation of the corrective measures. This CQAP establishes requirements for developing the overall site-specific construction quality control (CQC) system to be implemented at RSA-204. The CQAP will be implemented during all phases of the project, including preliminary site activities, remediation, and close-out activities.

CB&I has been contracted by Redstone Arsenal (RSA) to perform a CMI for RSA-204. The Army will observe the work during its performance by CB&I and will approve the work upon acceptable completion.

The CQAP is also applicable to off-site suppliers of equipment or services to the project that could affect the quality of the CMI. In particular, the following items must be adhered to during the CQA activities:

- Guidelines and requirements prepared and documented in the CMI Work Plan
- Construction verification as work is performed, by inspection and verification testing, so that the design features are implemented as intended
- Evaluation of variance to the design that may occur during construction and remediation and its effect upon system performance
- Complete documentation prepared and maintained during and after construction and remediation so that it can be demonstrated that the design has been implemented and that the performance requirements have been met.

1.4 Presentation of the CQAP

This CQAP is designed so that the CQC activities for all portions of the remediation are executed and managed from a common set of quality objectives and practices as described in the Construction Quality Control Plan and the Installation-Wide (IW) Quality Assurance Program Plan (QAPP) (Shaw, 2013b). The CQA and CQC activities, as described herein, serve as the minimum requirements to verify that all work is in compliance with the quality requirements set forth in the CMI Work Plan and consistent with the local, state, federal, and other appropriate regulatory agencies for the types of environmental activities performed.

2.0 Responsibility and Authority

CB&I will perform the CMI for RSA-204. RSA will observe the work as it is performed to ensure compliance with the CMI Work Plan. Observation by ADEM personnel will be dependent on the phase of the work being performed.

It is the responsibility of all project personnel to report activities that could adversely affect the CQC requirements set forth by the contract documents. The dedicated CB&I Contractor Quality Control Systems Manager (CQCSM) is specifically responsible for identifying, reporting, and documenting activities affecting quality and for verifying correction of materials and activities that do not conform to the specified contract requirements. The Site CQCSM will maintain a close working relationship with the Cost Account Manager (CAM) and RSA, keeping them advised of all situations which, if not corrected or controlled, could affect the resulting quality of the project.

CB&I will designate an authorized representative to be responsible for CQA, referred to as the Site CQCSM. RSA will ultimately be responsible for providing the relevant documentation to the oversight agency (ADEM). CB&I will be responsible for furnishing appropriate documentation (outlined in this CQAP) to RSA for submittal to the oversight agencies, as required.

2.1 CQA Organization and Key Elements

The CB&I Group 4 CAM will be responsible to ensure the execution of the CQA duties for RSA-204, which will be performed by the Site CQCSM. CB&I, including its subcontractors, will be responsible for field activities and laboratory testing requirements for the project CQC. The responsibility of key personnel involved in the CQA and CQC activities are described in Sections 2.1.1 through 2.1.6.

2.1.1 CB&I Cost Account Manager

The CAM has the overall responsibility to ensure the execution of the work to be performed by CB&I, including efforts to ensure compliance with the requirements of ADEM. Among other duties, the CAM will coordinate all financial and project-required resources (technical as well as administrative) necessary for the implementation of the project. The CAM will maintain overall responsibility of the project through coordination activities with CB&I, ADEM, and the Army. The CAM shall verify that the corrective measures have been implemented in accordance with the CMI Work Plan. The CAM has the authority to select and dismiss organizations charged with

implementation of the corrective measures and is vested with the authority to stop work if conditions adverse to quality are persistent and need to be corrected before proceeding further.

2.1.2 Regulatory Oversight Agency (ADEM)

The primary regulatory oversight agency for the RSA-204 CMI is ADEM. The oversight agency will provide review and comment on the CQAP to ensure that the proposed CQA program will provide for sufficient confirmation that work is being performed as intended. The regulatory oversight agency has the responsibility to review CQA documentation during and upon completion of the corrective measures to confirm that the CQAP has been followed and construction/remediation has been performed in accordance with the regulatory requirements.

2.1.3 CB&I Site CQCSM

The CB&I Site CQCSM will be responsible for the review and approval of the equipment and materials supplied by CB&I (including its subcontractors). The Site CQCSM reports directly to the CB&I director of quality assurance (QA)/quality control (QC). The work that the Site CQCSM produces is subject to the review and approval of the CAM, the Program CQCSM, and the Project Engineer.

A few deviations from the CMI Work Plan are not uncommon during the implementation of corrective measures. As such, activities may need to be adjusted accordingly during the progress of construction and remediation. The Site CQCSM may be requested to change some aspects of the design and/or CMI Work Plan if unexpected conditions (e.g., a change in site conditions, unanticipated logistical problems, change in construction/remediation methodology, or lack of availability of certain materials) are encountered during the construction work. Accordingly, the Site CQCSM will be responsible for preparing the appropriate revisions and providing necessary feedback to the CAM or Director of QA/QC.

The Site CQCSM is responsible for coordinating all required field activities and laboratory CQC testing activities, including sample collection and shipment and verification of the test results. The results will be documented on the daily construction log. Additional responsibilities include preparing addenda to CQAP and formulating corrective actions when variance or nonconformance is detected or required.

2.1.4 CQC Analytical Laboratory

In accordance with the contract documents, CQC activities for soil and groundwater will be performed by a subcontracted laboratory. The testing laboratory must have their own internal QC procedures to ensure that laboratory analyses conform to the appropriate regulatory requirements

and applicable testing standards. The CQC laboratory is responsible for ensuring that analyses are performed in accordance with applicable test methods and standards for following internal QC procedures, maintaining sample chain-of-custody records, and reporting data. In addition, the CQC laboratory must be willing to allow announced or unannounced inspections by authorized project personnel, including representatives from RSA and ADEM, in order to observe the sample preparation and analysis procedures. The laboratory must be willing to accommodate such inspection as long as the observer does not interfere with the testing process.

2.1.5 CB&I and Subcontractors

CB&I has the overall responsibility for conducting the remediation in accordance with the approved CMI Work Plan. CB&I, including its subcontractors, must perform CQC tests, as required by the CMI Work Plan, during project remediation activities; provide CQC documentation as specified; and report variances and nonconformances as outlined in this CQAP.

2.1.6 CQC Personnel

Field QA/QC personnel are individuals designated by CB&I and its subcontractors and whose duty it is to ensure that products and services are provided to the RSA in accordance with the CMI Work Plan.

2.2 Qualifications

CQA and CQC activities will be accomplished by appropriately qualified personnel. Each individual shall understand and enforce the specified quality requirements and recommend improvements in processes and/or services that could affect the cost, schedule, and quality of the project in a positive manner.

The key personnel involved in the CQA/CQC program and their minimum recommended qualifications are provided in the following table:

Key Personnel in CQA/CQC Organization	Role/Minimum Qualifications Requirements
CB&I CAM *Mark Shoemaker*	The specific individual(s) to certify that the construction activities have been completed in accordance with project design CMI Plan.
CB&I Project Engineer *Scott Wilson*	The individual who prepared the CMI Work Plan and designated representative of CB&I with knowledge of the design and contract requirements.
QA/QC Manager *Dave Marcum*	Independent supervisor of CB&I Site QA/QC technicians. Twenty years of QA/QC project work.
Site Manager *To Be Determined*	The individual implementing the CMI Work Plan. U.S. Army Corp of Engineers CQA trained.

Key Personnel in CQA/CQC Organization	Role/Minimum Qualifications Requirements
Site CQCSM *Brian Rhodes*	Responsible for the review and approval of the equipment and materials and coordinating all required field and laboratory CQC testing activities, including record keeping, sample collection, and shipment. Five years project work; prefer college degree in science or technical field.
CB&I Field QA/QC Personnel *To Be Determined*	Designated CB&I and/or subcontractor personnel (or independent third parties) to perform specific CQC testing. No training required other than in-the-field training for assigned tasks.

2.3 CB&I Personnel Training

Personnel assigned to the project, including subcontractors, are trained to ensure competence commensurate with the responsibility and qualifications necessary to perform the assigned tasks. In addition to education and experience, job-specific training may be required to qualify individuals to perform certain activities. The CB&I CAM and Site CQCSM will review and document the personnel qualifications and training to verify compliance to the subcontract requirements.

All personnel will be trained in accordance with Occupational Safety and Health Administration Section 1910.120. Project personnel will receive an orientation to the CMI Work Plan as appropriate to their responsibilities before participation in project activities.

The CB&I CAM and Site CQCSM will review the qualifications and training of all personnel assigned to the project. Training and qualification records will be maintained at the project site available for review. Training of site personnel will be verified and documented as applicable to the work to be performed. The Site CQCSM will monitor the training activities to verify all required training is completed and verify that the training is documented and current records are maintained.

Training will include all phases of the work as necessary and will be commensurate with the complexity of the activities being performed. Training methods may include formal classroom training, required reading, on-the-job training, or combinations of these methods. Training procedures will be reviewed and approved by qualified CB&I project personnel.

Training programs are conducted according to organizational needs and policies so that personnel:

- Have an acceptable understanding of the safety consideration of the work tasks

- Possess knowledge of the processes adequate to perform assigned tasks
- Have a working knowledge of the project or facility basis requirements
- Have an understanding of systems, terminology, reasons for performance of specific control functions, and the acceptance and rejection criteria for the work
- Know the consequences of inadequate quality attainment.

The training program will be evaluated to determine the effectiveness of the program and instruction. If it is determined that the program content, instructor capabilities, or other conditions require changes, the program will be updated at that time. At a minimum, the training will be reviewed as part of the management assessment.

Training Records. CB&I maintains qualification and training records for each employee. Training records should include all documents that establish the employee's capabilities, including outside training and training performed by approved training organizations. The Site CQCSM will verify compliance with the project requirements.

2.4 Communication Within the CQA Organization

Communication between the CQA program participants includes the exchange of information which allows work to proceed and the required reporting so that activities can be reviewed. Construction documents, inspection reports, audit reports, verification test results, and daily construction logs must be timely so that reviews and evaluations can be performed by all the parties responsible for execution of the work.

CQA personnel, the CAM, and CB&I and its subcontractors must communicate as required and as addressed in this CQAP to maximize the efficiency and effectiveness of the CMI and to minimize variance or nonconformance.

2.5 CQA Meetings

CQA meetings will be held throughout the progression of construction/remediation activities on an as-needed basis. Progress meetings will be documented in the form of meeting minutes prepared by the Site CQCSM and will be maintained in the on-site CQA files.

3.0 Contract Scope of Work

The complete and detailed scope of work for the planned construction/corrective measures activities are presented in the CMI Work Plan and in the supporting documents. Additionally, the CMI Work Plan provides the proposed schedule and sequencing of the activities. This chapter provides a general overview of the activities and an outline of the CQC testing requirements referenced in the CMI Work Plan. Chapters 4.0 through 10.0 present the necessary supporting aspects of the CQC/CQA program that must be implemented to ensure that the overall objectives of the program are met and to provide evidence of compliance with all applicable project and regulatory requirements.

3.1 Proposed Work Activities

The general scope of work for the corrective measures activities at RSA-204 includes the following:

- Procurement and subcontracting
- Preliminary site activities:
  - Mobilization
  - Access to RSA
  - Digging permit and utility clearance and marking
  - Site controls
  - Construction of surface water and erosion controls
  - Vegetation clearing
  - Surveying and marking the newly installed well, proposed injection locations, excavation areas, and localized cap area (Building 7689)
  - Well installation
  - Baseline groundwater sampling
  - Well closure
  - Berm removal
- In situ enhanced bioremediation (ISEB) groundwater treatment:
  - Underground injection control preparation and approval
  - Reagent mixing
  - Injection of emulsified vegetable oil (EVO) and nutrient amendments in perimeter well points and source area DPT locations
- Excavation of contaminated soil in two site areas:
  - Excavation of soil
  - Confirmation sampling and analysis
  - Waste management characterization sampling

- Transport and disposal of excavated soils as special waste (nonhazardous) at a Subtitle D landfill
- Removal of sump near Building 7689 and septic tank

- Backfilling of excavation areas:
  - Borrow source sampling
  - Application of EVO solution prior to backfilling excavations
  - Application of backfill material

- Construction of impermeable concrete cap adjacent to Building 7689

- Site restoration and demobilization:
  - Application of topsoil and revegetation with approved grass mixtures
  - Replacement of asphalt driveways and roads (as necessary)
  - Berm reconstruction
  - Well replacement
  - Demobilization

- Long-term monitoring
  - Groundwater sampling for treatment performance to meet CGs
  - Cap inspections and maintenance

- Environmental Use Restrictions
  - Land-use control inspections.

3.2 CQC Requirements and Responsibilities

Sections 3.2.1 through 3.2.8 present a summary of the CQC testing requirements and responsibilities of the CB&I Site CQCSM during implementation of corrective measures at RSA-204. The information presented herein is intended only to provide an overview of the requirements; the complete and full details of the planned work is contained in the CMI work plan and supporting documents.

3.2.1 Preliminary Activities

Preliminary activities include mobilization, requirements for base access, digging permits and utility marking, site control, storm water erosion and sediment controls, vegetation clearing, marking and surveying, well installation, and berm removal. The digging permit will be obtained from the Directorate of Public Works prior to commencement of the CMI. During these activities, the Site CQCSM will be responsible for reviewing purchase orders and packing slips to ensure all materials received are in accordance with the CMI specifications. Erosion and sediment controls will be implemented in compliance with the *Alabama Handbook for Erosion Control, Sediment Control, and Stormwater Management on Construction Sites and Urban Areas* (Alabama Soil and Water Conservation Committee [ASWCC], 2009) (Appendix G). Site

controls will be enforced in accordance with the site-specific safety and health plan (Appendix D). A licensed land surveyor will be subcontracted to delineate the project work boundary, survey the new monitoring well, the well points, and DPT injection locations, excavation areas, and localized cap at Building 7689; and to set the grades prior to and during placement of excavated material and again during backfilling activities. One new interface zone monitoring well (204-RS2824) will be installed before conducting the baseline groundwater sampling. Four monitoring wells located within the excavation/injection areas are planned to be closed in accordance with Standard Operating Project Procedure (SOPP) No. 21 (Shaw, 2013b) and ADEM approval. Baseline groundwater sampling will be performed prior to the ISEB treatment. Groundwater samples will be collected from selected site wells to define the pretreatment water quality conditions. Two existing earthern blast berms at Buildings 7688 and 7689 will be leveled to grade until construction activities are complete. The berms will be reconstructed during site restoration activities (Section 3.2.6).

3.2.2 ISEB Treatment

The initial ISEB activities include preparation of the underground injection control application and obtaining approval, establishing facilities and work areas, injection reagent mixing, and material handling and storage. The ISEB treatment will take place in two locations.

To effectively cover the two areas selected for treatment, the EVO solution will be injected first into 21 well-point locations (and up to 10 contingency stepout locations) that will be in place before commencing the corrective measures (design optimization phase). The proposed locations ("204INJPZ") are shown on Figure 4-1 in the CMI work plan; 12 well points are planned for the northern area and nine are planned for the southern area. These 1¼ -inch diameter polyvinyl chloride (PVC) casing injection well points will serve a dual purpose being used both during the design optimization to refine the perchlorate plume contours and during groundwater treatment to inject EVO and nutrient amendments at the perimeter of the source areas. The well points in the southern treatment area will be placed near the overburden-bedrock interface with a 10-foot screen interval across the 14 foot saturated thickness. With an average 26-foot saturated thickness in the northern treatment area, the well points will be installed as paired clusters of deep and shallow well points. Each deeper well point will have a 10-foot long screen, the bottom of which will be placed near the overburden-bedrock interface, and each shallow well point will have a 10-foot long screen, the top of which will be placed near the top of groundwater (at approximately 17-22 feet below ground surface). These small diameter well points installed by DPT will allow for pressurized injections through each of the 10-foot screens.

Plume core DPT injections ("204INJ") of EVO and nutrient amendments will follow after the perimeter well point injections are completed; 21 locations are planned for the northern area and 16 locations are planned for the southern area for a total of 37 locations as shown on Figure 4-1 in the CMI work plan. Pressurized injections of the solution in overlapping intervals will be used to enhance the anaerobic degradation of perchlorate in groundwater within the treatment zone. The anaerobic conditions produced by the addition of the EVO solution will also promote the reductive dechlorination of other compounds, including TCE, in the treatment zone.

MNA will be implemented on the plume perimeter to evaluate the combined effects of the ISEB, source removal, and natural attenuation processes for arresting and reducing the plume's extent as well as monitoring the concentrations of TCE and explosive compounds.

A second round of DPT injections is planned for approximately 1 year after the initial EVO solution injections to address any remaining hot spots within the treatment area. New injection borings will be required for the second round of injections; the locations and number of borings will be determined following review of the treatment performance data from the sampling conducted with the first injection rounds. Approximately seven DPT locations for both source areas, or 20 percent of the 37 DPT injection locations, have been assumed in this second round of injections.

Performance monitoring to achieve CGs is discussed in Section 3.2.8.

3.2.3 Soil Excavation and Confirmation Sampling

Perchlorate-contaminated soil will be excavated at RSA-204 to meet the CG specified in the CMI Work Plan. Excavation will be accomplished according to the Safety and Health Regulations for Excavations (Occupational Safety and Health Administration 29 Code of Federal Regulations Part 1926 Subpart P). A licensed land surveyor will be contracted to survey the final excavation limits at each area. Surveying will be conducted in accordance with the Alabama Society of Professional Land Surveyors Standards of Practice for Surveying in Alabama (www.asps.org). Soil confirmation samples will be collected as discussed in Appendix F.

Contaminated soils will be stockpiled during the excavations at RSA-204. Based on site knowledge and data from similar sites, it is expected that the excavated soils will be managed as a nonhazardous special waste and that the soil will likely be able to be disposed as special waste (nonhazardous) at a RCRA Subtitle D landfill. CB&I will use a licensed transportation and disposal subcontractor to complete these activities. The waste characterization results will be submitted to ADEM for approval, and an ADEM waste certification number will be obtained prior to disposal of the excavated soils. In addition, clean stockpiles consisting of soils with

perchlorate concentrations anticipated to be below the CG (i.e., surface and shallow subsurface soil in select areas) will be maintained at the site. If composite sampling shows that the perchlorate concentration is below the CG, the soil will be deemed suitable as backfill for the excavation. If the perchlorate concentration exceeds the CG, it will be disposed with the contaminated soils at a RCRA Subtitle D landfill.

Asphalt pavement or concrete surfaces (e.g. roadways and sidewalks) will be saw cut prior to excavation. Any clumps of soil will be removed from the concrete and asphalt and stockpiled with other soil from the area. As perchlorate is not a hazardous constituent, swipe testing of the concrete/asphalt debris will not be required prior to disposal/recycling. The concrete debris will be transported to the RSA construction & demolition (C&D) landfill or another appropriately permitted facility for disposal. Asphalt will be transported to the RSA recycling program's designated location for recycling.

The sump located in the southeastern excavation and the septic tank and abandoned drainlines in the central area will be removed through mechanical (e.g., trackhoe ram head, etc.) means and transported to the C&D landfill or recycled as appropriate. Since perchlorate is not a hazardous constituent, swipe testing of the structures will not be required prior to disposal/recycling.

3.2.4 Backfilling

Prior to backfilling, EVO solution will be added to each excavated area at the groundwater interface to enhance and extend the ISEB treatment of the groundwater. A layer of stone will be added across the bottom of the excavation to cover the EVO liquid prior to backfilling. This stone layer will allow for proper backfill compaction after application of the EVO. Clean soil for the fill material will be laboratory tested prior to placement. Approximately 16,402 cubic yards of fill material will be needed from an approved borrow area or the clean stockpile area for both excavations. If sampling of the on-site borrow source material has not been conducted, CB&I will sample the material to confirm it is acceptable for use as backfill at the sites. The borrow material sampling, if required, will include one 5-point composite sample analyzed for target compound list (TCL) semivolatile organic compounds, TCL pesticides/polychlorinated biphenyls, perchlorate, and target analyte list metals and one sample analyzed for TCL volatile organic compounds (Appendix F). The analytical results will be compared to background screening values and preliminary screening values to ensure that the material is acceptable for use. The fill material will be dumped near each excavation area using a dump truck and placed in lifts no greater than 1 foot high, and each lift will be compacted by the excavator prior to placement of the next lift. Any stockpiled soil removed during excavation and determined to be clean by sampling will also be placed in the excavation. Clean stockpiled soil with perchlorate

concentrations equal to or below the CG of 1.7 milligrams per kilogram will also be used to backfill the excavation.

Once the areas have been backfilled and compacted, clean topsoil will be placed over the affected areas. The Site CQCSM will be responsible for verifying the proper fill materials are used.

3.2.5 Impermeable Cap

It may not be possible to excavate the area immediately adjacent to Building 7689 for perchlorate-contaminated soil above the CG because of concerns regarding safety and the stability of the building. Consequently, if confirmation sampling results from the excavation sidewalls adjacent to the building indicate perchlorate remains in soil at concentrations greater than the CG, then an engineered barrier (e.g., a cap consisting of a foundation layer, geosynthetic clay liner, visual demarcation barrier, and erosion control layer) will be constructed within the foundation protection area (inaccessible area for excavation adjacent to Building 7689) to restrict surface water infiltration into the subsurface to help reduce the potential for perchlorate to leach from the site. The engineered barrier has been designed to meet the requirements of a RCRA Subtitle D site cover in accordance with Alabama Administrative Code (AAC) 335-13-4.20 and 40 Code of Federal Regulations Part 258.60. The Site CQCSM will be responsible for verifying the cap is constructed according to the specifications. Scheduled activities for cap inspection, maintenance, groundwater monitoring, and reporting are presented in Section 4.16 of the CMI work plan and Appendix K.

3.2.6 Site Restoration

Soil excavation will disturb/destroy site vegetation. Any vegetated areas that are disturbed/ destroyed will be restored following completion of the remediation and removal of all equipment. Restoration will include reseeding the area, and applying mulch. The ASWCC should be consulted to determine the grass species to use. The Site CQCSM will be responsible for verifying the proper revegetation materials are used in accordance with the best management practices in Appendix G.

The temporary erosion and sediment controls will be removed and disposed off site at the RSA construction and demolition landfill. The silt fence will remain in place until after the vegetation is established.

The berms will be reconstructed to Army specifications during site restoration activities using only the stockpiled berm soil with additional clean backfill, as required.

Required replacement wells will be constructed using hollow-stem auger methods. These methods are outlined in SOPP No. 20, *Drilling Unconsolidated Material* (Shaw, 2013b). Well installation and development procedures are provided in SOPP No. 17, *Monitoring Well Installation,* and SOPP No. 8, *Well Development,* respectively (Shaw, 2013b).

Roads and driveways impacted as a result of excavation activities will be repaired/replaced in accordance with ALDOT and Army requirements for road construction at RSA.

3.2.7 Final Inspection and Demobilization

When planned corrective measures activities have been completed, temporary field structures (e.g., fencing) will be removed and disposed off site. A final inspection of the project site will then be conducted in accordance with the requirements outlined in this CQAP.

After the completed work has been accepted by RSA, all personnel and equipment will be demobilized from the project site. During these activities, the Site CQCSM will be responsible for the following tasks:

- Oversee the removal of temporary field structures.
- Obtain required waste characterization samples as necessary for off-site disposal.
- Coordinate disposal with RSA personnel (including obtaining appropriate RSA signatures on waste manifests or bills-of-lading) and the subcontracted transportation and disposal vendor.
- Participate in final field inspection and note deficiencies that require corrective action.
- Coordinate implementation of corrective actions and arrange for re-inspection of the cap on a semiannual basis (Section 4.16.3 of the CMI work plan).
- Submit final approved inspection report to RSA.
- Oversee demobilization activities.

3.2.8 Long-Term Monitoring

3.2.8.1 Groundwater Monitoring and Reporting

Groundwater monitoring will commence after the first round of reagent injections has been conducted. The schedule for the first year will consist of sampling approximately 30 days, 120 days, 210 days, and 300 days after the first injection round. Replacement wells installed

following the completion of excavation activities will be added to the next scheduled sampling event following their installation and development. Samples will be collected from the approximately 26 selected groundwater monitoring wells in and around the treatment area as discussed in Section 4.16 of the CMI Work Plan and Appendix K. The samples will be collected using low flow purging and sampling techniques. The long-term groundwater monitoring samples will be analyzed for the same analytes and field parameters as the baseline groundwater sampling event. The samples will be collected per SOPP 7.0, *Groundwater Sampling* (Shaw, 2013b).

The data collected from the baseline groundwater sampling and the quarterly first year sampling events following the first injection round will be used to plan the second round of injections. A second round of DPT injections is planned approximately 1 year after the initial EVO solution injection round to address any remaining residual hot spots or perchlorate rebound areas within the treatment areas. The sampling frequency during this second year as well as the third year will be semiannual. Groundwater sampling in years 4 through 30 (anticipated to be the end of the corrective measures) will be conducted annually.

3.2.8.2 Cap and Land-Use Control Inspections

RSA will properly operate and maintain all facilities at RSA-204 to achieve compliance with the conditions of the Permit (ADEM, 2016). Proper operation and maintenance includes effective performance, adequate funding, adequate operator staffing and training, and adequate laboratory controls, including appropriate quality assurance procedures.

The cap will be monitored, maintained, and repaired, as necessary, to ensure its long-term effectiveness. Monitoring will consist of regular inspections of the cap and surrounding vegetation. Repairs will be made as required. RSA will perform inspections on a semiannual basis to ensure continued integrity of the remedy and to ensure that land use remains appropriately restricted per the environmental covenant.

General site inspections of the localized cap at Building 7689 shall be conducted semiannually to ensure that the integrity of the engineered cover is maintained.

- Site inspections will consist of a complete walkthrough and visual inspection of the cap area.
- Repair of a disturbance or breach of the cap shall be initiated within 10 days of identifying the need for such repairs.

- Repairs to the warning signs shall be completed as needed and initiated within 10 days of identifying the need for such repairs. Prior to modifications in the frequency of inspection the Army will submit a request to ADEM for review and approval.
- The capped area will be paved with concrete. Adjacent areas will be mowed a minimum of twice a year.

The frequency of inspections can be scaled back to once per year, once conditions of the cap have stabilized over a minimum period of two years. The cap and LUC inspection form is included in Appendix K. Cap and LUC inspection forms will be included in the annual CMI effectiveness reports. Prior to modifications in the frequency of inspection the Army will submit a request to ADEM for review and approval.

3.3 Additional Considerations

The information contained in the sections above only represents an overview of the proposed field work activities and is intended to serve as a guide to the complete details of work as included in the contract CMI Work Plan and other supporting documents (i.e., DCQAP, etc.). The Army will be required to complete and submit the Environmental Use Restriction to ADEM upon finalization of the land use controls for the localized cap at Building 7689. As noted previously, the remaining chapters of this CQAP contain discussions of the additional components of the overall CQA/CQC program which are implemented to ensure the generation of defensible evidence of compliance with contract and regulatory requirements.

4.0 Document Control

The CQAP is a controlled document, and measures are included to maintain the currency and the use of the plan so that the CQC functions defined within are in accordance with the latest specified requirements. Distribution of the plan is controlled so that all revisions to the plan are issued to the plan holders and the superseded requirements revised accordingly in the existing plans.

Issuance and distribution of the plan will be controlled by the CB&I CAM or his/her designee, the document controller. The plan will be transmitted to each plan holder on the distribution list. The transmittal document will reference the assigned document control number, which will appear in the top right hand corner of the transmittal letter included in each document. The assigned number will be kept on a log maintained by the CB&I CAM's designee in the home office in Knoxville, Tennessee. Copies will be maintained at specific locations and available to the individuals performing the work.

Revisions to the plan will be made by sections or by the addition of supplements or amendments and noted with change pages or a new final or revised document. All accepted revisions to the plan will be transmitted to the plan holders according to the distribution list. Each individual or organization designated as a plan holder will be responsible for updating their copy of the plan.

4.1 Documentation

The CB&I CAM will provide a document control system to provide measures for the control of issuance, distribution, storage, and maintenance of documents relating to quality, including those from CB&I and its subcontractors and other vendors or suppliers.

Preparation, review, issuance, and revisions to documents affecting construction quality will be controlled so that the specified contract, regulatory, and permitting requirements are clearly defined and made available to the personnel performing the work. Such documents may include but not be limited to the following:

- Correspondence
- Drawings
- Procedures
- Plans
- Reports
- CMI Work Plan.

The CB&I CAM or his/her designee will review the documents to verify inclusion of the appropriate QA requirements.

4.2 Daily Construction Log

Preparation and Submittal of Daily Construction Log. CQC reporting will be addressed in the daily construction log, and CB&I will document all project activities as required by the contract. The log will cover both conforming and nonconforming work and will include but not be limited to the following:

- Weather conditions
- Site instructions
- Nonconforming conditions
- Results of inspections and tests
- Types of defects/causes for rejection
- Corrective actions proposed/taken
- On-site personnel/major equipment log
- Delays and causes
- Verbal instructions.

A typical daily construction log is included as Table 4-1. RSA will be provided a weekly submittal of daily construction logs throughout the duration of the project.

4.3 Records

4.3.1 Evidence of Contract Compliance

Records will be prepared to furnish documented evidence that design, construction, and operation activities, including laboratory analysis, are in compliance with the quality requirements of the contract. The records will be consistent with the applicable sections of the project technical CMI Work Plan and may include one or more of the following:

- Daily construction logs
- Technical reviews
- Inspection and test reports
- Audit reports
- Monitoring and surveillance activities
- Personnel qualifications
- As-built drawings
- Nonconformance reports (NCR)/corrective actions
- Design documents

- Laboratory analyses reports
- Other specified documents, such as cap inspection and land-use control documentation.

4.3.2 Storage of Field Records

Copies of field records will be maintained and stored at the project site until turnover as specified by RSA. On-site records will be readily retrievable for review and audit purposes by ADEM and RSA. The records will be controlled so that the possibility of loss, damage, or other detrimental conditions of the records is avoided. The original project documents will be stored at the CB&I home office in Knoxville, Tennessee.

4.4 Project Submittals

Project submittals include documents generated or revised in the home office in Knoxville, Tennessee, or in the field site office at RSA. Project submittals will have tracking numbers issued with each new or revised document. In addition, project submittals specified in the contract documents and CMI Work Plan will be prepared by CB&I and submitted to the Site CQCSM. The CB&I CAM is responsible for the preparation and maintenance of the specified submittals for the project.

A master set of as-built drawings will be kept at the CB&I field office and marked periodically with variances from the contract documents. Two sets of as-built drawings will be maintained at the site. Each deviation will be identified with the appropriate modifying documentation. These as-built drawings include buried or concealed structures and utility features revealed during the course of the site work. A copy of the marked set of prints and updated design drawings, if required, will be submitted.

4.4.1 Document Submittal Register

The Project Submittal Register will be maintained in the home office in Knoxville, Tennessee. Submittals returned unapproved or with comments requiring revisions will be so noted on the submittal register and re-entered as revisions. The CB&I Project Engineer or his/her designee will monitor the submittal register to verify submittals are being controlled, scheduled, tracked, and the status kept in an effective manner. The Project Submittal Register will be updated continuously, as applicable, and reviewed by the Project Engineer or his/her designee to determine the status of the submittals and compliance with the project schedule requirements.

4.4.2 Submittal Preparation and Transmittal

Submittals will be prepared by the CB&I CAM or his/her designee. Submittals from subcontractors or vendors will be reviewed by the CB&I Site CQCSM prior to transmitting the submittals to the CAM and Project Engineer or designees. All appropriate information will be completed prior to transmittal of the submittals. Submittals will be scheduled to coincide with the needed dates and adequate time allowed for review and approval in accordance with the contract requirements. The submittals will be reviewed for conformance to specified requirements, completeness, and accuracy. Submittals requiring modifications or changes will be returned to the CB&I CAM or his/her designee for corrective actions and resubmitted for review.

4.4.3 Resubmittals

Submittals which are not approved by the Site CQCSM or returned with comments which require resubmittal for approval will be processed in the same manner as the original submittals. The submittal number used for the original submittal will be used for each resubmittal followed by a numerical notation indicating the revision. The resubmittals will be re-entered on the Project Submittal Register with the new revision number.

5.0 Nonconformances and Corrective Actions

This chapter addresses the procedure for reporting nonconformances and corrective action for variance from the contract documents.

5.1 Nonconformance Report

Work, field testing, laboratory testing, or materials not conforming to the CMI Work Plan or contract requirements, including noncompliances and deficiencies identified by RSA, will be documented on an NCR (Table 5-1). At a minimum, the NCR will detail the nonconforming conditions, recommended corrective action(s), and disposition of the corrective action(s). CB&I will immediately correct noncompliances or deficiencies identified by the Site CQCSM.
A master log of all NCRs will be kept by the Site CQCSM for review by the CAM. All NCRs will remain open until the nonconforming condition has been satisfactorily resolved and verified as acceptable by the QA/QC Director.

5.2 Identification of Nonconforming Items

Items identified as nonconforming will be documented on the NCR, which, as applicable, will include the following:

- Description of nonconforming item or activity
- Detailed description of nonconformance
- Cause of nonconformance
- Referenced criteria
- Recommended disposition
- Disposition and verification of corrective action
- Responsible organization.

5.3 Nonconformance Tracking Register

Each identified nonconformance will be documented on the sample NCR Tracking Register (Table 5-2) which, at a minimum, will include the following information:

- NCR tracking number
- Issue date
- Distribution parties
- Individual/organization assigned responsibility
- NCR closed-out date and initial of party responsible for closure.

The Site CQCSM is responsible for maintaining the NCR Tracking Register and ensuring that the corrective actions were implemented and verified prior to closing the NCR. RSA will be

notified in advance of verification of the corrective actions to permit their participation in the inspections and acceptance of the results prior to closing the NCR.

5.4 Control and Segregation

Nonconforming materials or items will be controlled to prevent inadvertent use or further processing which would cause the nonconforming condition to be inaccessible for correction. All items identified as nonconforming will be clearly identified and segregated from acceptable items except where size, installation status, and other conditions would make it impractical to segregate from conforming items. When nonconforming items are not segregated, they will be identified and clearly marked so that they may be easily recognized as nonconforming to prevent further activities prior to the implementation of the corrective action(s).

5.5 Disposition

The disposition of NCRs will include the necessary actions required to bring the nonconforming condition to an acceptable condition and may include reworking, replacement, retesting, or reinspection. Implementation of the disposition will be in accordance with the original procedural requirements, a specific procedure, or other acceptable written instructions by the QA/QC Director.

5.6 Documentation

Notifications of noncompliance and the proposed corrective actions will be documented on an NCR and processed in accordance with the provision described in this section. Corrective actions will be implemented upon receipt of the notification. The NCR will remain open until the noncompliance is resolved.

5.7 Corrective Actions

In addition to resolving identified nonconforming conditions, corrective actions will also address the cause of adverse conditions contributing to the nonconformance and establish methods and controls to preclude the recurrence of the same or similar types of nonconformances.

The Site CQCSM will track corrective actions to identify trends in the causes of the nonconforming conditions and initiate necessary actions to prevent recurrence. Additionally, the Site CQCSM will monitor the corrective actions to verify that corrective actions were properly implemented and accepted and the NCR closed.

5.8 Stop Work Notice

Nonconforming conditions which affect the quality of the project, threaten safety, or cause an environmental threat will be stopped through the use of a Stop Work Notice (Table 5-3). Stop Work Notices may also be issued in the event of insufficient corrective actions resulting in recurring nonconforming work. The issuance and tracking of Stop Work Notices will be documented on a Stop Work Notice Log (Table 5-4) to be maintained by the CB&I CAM (or his/her designee).

5.9 Conflict Resolution

Conflicts arising from nonconformance and corrective actions which cannot be resolved at the project management and QC levels will be directed to successive levels of management as necessary to obtain resolution. The levels of management will include the Site CQCSM, QA/QC Director, and CAM. All conflicts will be resolved within the specified requirements of the contract and the governing regulatory documents.

6.0 Procurement Control

This chapter addresses the procedure for ensuring that procured items and services meet established requirements and perform as specified within procurement standard operating procedures.

6.1 Introduction

Prospective suppliers will be evaluated and selected on the basis of the specified criteria. CB&I will ensure that approved suppliers can provide acceptable items and services as required by the contract. The Project Engineer will review and approve all materials and supplies that may affect quality of the project. Upon approval of purchase requisitions, the Site CQCSM will receive a copy of the approved purchase requisition. When materials and supplies arrive at the project site, the Site CQCSM will be responsible to ensure the items and services meet the requirements listed in the purchase requisition and that no items are installed prior to approval of applicable submittals.

The procurement details include provisions for the following, as applicable to the scope of work or services:

- ***Scope of Work.*** A statement of the scope of work to be performed by the subcontractor will be in the procurement documents.
- ***Technical Requirements.*** Technical requirements will be specified. Where necessary, these requirements will be specified by reference to CMI Work Plan, codes, regulations, procedures, QA program documents, and statement of work requirements that describe the services to be furnished. The procurement documents will provide for identification of inspection, verification, and acceptance requirements for monitoring and evaluating the supplier's performance.
- ***Quality Assurance Program Requirements.*** Procurement documents will require that subcontractors have a documented quality system that implements portions or all of the requirements of this plan, as applicable. The extent of the suppliers' quality system will depend on the type and use of the service being procured.
- ***Right of Access.*** At each tier of procurement, the procurement documents will provide for access to supplier's facilities and records for inspection or audit by CB&I or its authorized representative.
- ***Documentation Requirements.*** Procurement documents at each tier of procurement will identify the documentation required to be submitted to CB&I for

information, review, or approval and the time of submittal. The retention times and the disposition requirements for specific quality records will be prescribed.

- ***Questionable or Unusable Data.*** The procurement documents will include requirements for reporting and approving disposition of questionable or unusable data.

6.1.1 Review of Procurement Documents

The Site Supervisor will ensure that site-initiated procurement documents and changes transmitted to the prospective supplier include adequate requirements, performance standards, and quality criteria. The purchase requisition will then go through the proper approval process including the CB&I CAM, the Project Engineer, and the Procurement Leader.

The review of changes and their effects will be completed prior to transmittal to the prospective supplier. This review will include the considerations that the appropriate requirements are specified and additional or modified performance criteria are determined, and analysis of exceptions or changes requested or specified by the supplier.

6.1.2 Source Evaluation and Selection

The selection of suppliers and subcontractors will be based on an evaluation of their capability to provide items and/or services in accordance with the specified requirements. Measures for evaluating and selecting procurement sources will be documented and may include one or more of the following:

- Evaluation of the supplier's history of providing an identical or similar service, which reflects the current capability
- Supplier's current QA records supported by documented qualitative and quantitative information that can be objectively evaluated
- Supplier's technical and quality capability as determined by a direct evaluation of their facilities and personnel, an evaluation of the effectiveness of their implementation of their quality system, and, in the case of subcontracted analytical data acquisition services, the successful analysis of a set of performance evaluation samples
- Submittals pertaining to the items or services to be provided must be approved prior to use or initiation of the work on the project site.

6.1.3 Acceptance of Services

The procurement control will include flow-down provisions of the contract and site-specified task order. The acceptance methods used (e.g., source verification, receipt inspection, and

technical verification of data produced) will be verified. Confirmation of specific characteristics will be performed at intervals and to a depth consistent with the service's complexity, quantity and frequency of procurement, and statement of work requirements.

6.1.4 Receipt Inspection and Verification

The Site CQCSM or designee will develop and implement procedures for receipt inspection and verification of purchased items. These controls will provide for the following, as applicable:

- Verification that the items received are in accordance with purchase order requirements
- Inspection for evidence of breakage, damage, or other indications of unfitness for use
- Verification that required documentation is received and is acceptable
- Verification that the items conform to the supplier's published requirements that were provided, submitted, and approved.

6.1.5 Handling, Storage, Packaging, and Shipping

The handling, storage, cleaning, preservation, packaging, and shipping of items shall be controlled to prevent damage or deterioration that would jeopardize the specified performance of the items.

Procurement documents shall include the following:

- Requirements for sellers to establish special procedures, when necessary, to ensure cleanliness, identification and proper handling
- Requirements for the preparation of items for shipment, as necessary, to prevent damage or deterioration of the supplied items.
- Requirements for material and equipment storage instructions, when specified, to be available at the site well in advance of the arrival of material/equipment.

6.2 Subcontractor Quality Control

All subcontractors performing work for a project are responsible for compliance to the requirements of their respective subcontract. Subcontractors include organizations supplying quality-related items or services to the project. The overall responsibility for conformance to the quality requirements for the subcontracted items and services is retained by CB&I.

The requirements for personnel qualifications, technical performance levels, QC procedures, acceptability levels, and documentation will be included as part of the subcontract documents.

The CAM or designee will review the subcontract procurement documents to verify that QC requirements are passed on to the subcontractor.

The Site CQCSM is responsible for the implementation of inspections, surveillance, document review, audits, and other QC activities to verify subcontractor compliance with the contract and subcontract requirements. These activities will be documented on inspection reports, audit reports, field logs, or other forms appropriate to the function performed.

For field operations, the field QA/QC personnel will provide QC checks before, during, and at the completion of the subcontractor's activities to determine that the subcontractor is in compliance with the QC measures set forth by the contract, the applicable subcontract documents, and the subcontractor's approved QC plan, including:

- Meeting quality requirements
- Generating, controlling, and maintaining required documentation
- Performing and documenting required inspections and tests
- Identifying, reporting, and correcting nonconforming conditions
- Turnover to CB&I.

6.3 Analytical Laboratory Services

Analytical testing will be performed using analytical laboratories off the project site as specified by the contract documents. The analytical testing requirements and related activities are described in Chapter 4.0 of the CMI Work Plan.

6.3.1 Other Subcontractors

Subcontractors performing work other than laboratory-related activities will be monitored by the Site CQCSM or field QA/QC personnel to verify conformance to the contract and subcontract quality requirements. The monitoring activities will include audits, surveillances, witnessing of inspections and tests, document reviews, and interfacing with the subcontractor's QC or project management. All monitoring activities will be documented on the appropriate form or included in the daily construction log.

6.3.2 Subcontractor Noncompliance

Work performed by subcontractors that does not comply with the specified requirements will be identified, reported, controlled, tracked, and corrected.

7.0 Audits

Audits may be performed to verify compliance with aspects of the project documents. Audits will be performed with checklists and will include a review of documents and records to determine if the CQAP and supporting procedures are being implemented. A site-specific assessment checklist for RSA-204 is provided as Attachment 1 of this CQAP. The individual elements of the checklist are based on the site-specific requirements presented in Worksheet No. 14 (Appendix F) and Chapter 4.0 in the CMI work plan.

An audit will note findings and observations. A finding is a documented statement of fact concerning a noncompliance or deviation from established requirements. An observation is a statement of fact regarding the potential for a noncompliance.

Audits will be performed by qualified personnel, including individuals that are technically knowledgeable in the areas to be assessed. Audit results will be documented and sent to the appropriate management.

7.1 Scheduling and Planning

Audits typically will be performed early in the life of the activity as practical and continue until completion of the activity. The Auditor will provide written notification to the organization to be audited informing them of the scheduled audit date.

Audit schedules may be prioritized based on the importance of the activity, previously identified deficiencies of the activity, and the size or complexity of the activity. The Site CQCSM will develop a schedule for the performance of audits. The audit schedule will be posted and distributed to project staff and managers. Unscheduled audits may be used to supplement scheduled audits when conditions warrant.

7.2 Internal Performance Audits

Performance audits are conducted on site by an Auditor who directly observes specific project activities to determine if these activities are being conducted in accordance with the contract requirements. The Auditor will be technically competent in the activities to be audited and independent of the subject work. The audit of project deliverables will determine compliance with the procedures set forth in this plan (i.e., technical reviews, documentation of reviews, document control, and other procedures). Checklist items to be examined may include the following:

- Availability and implementation of approved work instructions
- Field documentation and checking
- Subcontractor performance
- Review of personnel training and qualification records
- Review of process controls and associated records to determine compliance with CMI work plan
- Review of work areas for evidence of implementation of procedures and instructions
- Review of documentation indicating compliance with plan, document and design preparation, review, and approval procedures
- Change/nonconformance documentation and disposition.

7.3 Execution of Audits

Audits will normally be conducted as described in Sections 7.3.1 through 7.3.4.

7.3.1 Pre-Audit Meeting

The Auditor will conduct a brief pre-audit meeting with management or supervisory personnel of the organization to be audited to confirm the audit scope, discuss the audit sequence, establish a tentative time for the post-audit meeting, and establish channels of communication.

7.3.2 Audit

The Auditor will follow checklists, developed prior to the audit, to evaluate existing project records provided by designated project staff and may observe work in progress. If noncompliances are observed or uncovered during the audit, the Auditor will discuss these potential findings with the individuals being audited so that findings are accurate and understood. In addition to identifying noncompliances, the audit results may include observations of notable areas of strength.

7.3.3 Exit Meeting

Upon completion of the audit, the Auditor will discuss observations and findings with the group or organizations audited and, whenever possible, agree on corrective actions. Minor administrative findings that can be resolved to the satisfaction of the audit team during the audit are not required to be documented as items requiring corrective actions. All findings that are not resolved during the course of the audit and findings affecting quality will be noted on the audit checklists.

7.3.4 Audit Report

The Auditor will prepare and issue an audit report that provides the following information at a minimum:

- Unique audit number
- Description of the audit scope
- Audited organization and location
- Persons contacted during the audit activities
- Audit dates
- Summary of audit results, including a statement on the effectiveness of the quality management elements which were audited
- Suggested opportunities for improvement in the form of observations and comments
- Description of each reported audit finding in sufficient detail to enable corrective action to be performed.
- Due date for completion of corrective actions and/or audit response, typically 30 days.

Audit results will include findings and observations. Findings are items, which require corrective action. Findings will be documented on an Audit Finding Report or equivalent. Observations are nonmandatory recommendations to improve project quality. The Auditor may make recommendations for corrective actions; however, the ultimate responsibility for taking corrective action lies with the auditee. The report will be signed by the Auditor. Checklists need not be included with the audit report, but should be maintained as records in the project central files.

The Auditor will prepare an audit report cover letter or memorandum for signature and issuance by the CB&I CAM. The audit report will be issued to the management of the audited organization.

7.4 Response

The response prepared by the auditee will clearly state for each finding the corrective action taken or planned, the cause of the deficiency, and the action to prevent recurrence. For each

observation, the response will indicate actions taken or planned for quality improvement. The response will, at a minimum, be sent to the CB&I CAM and the Auditor.

7.5 Follow-Up

The Site CQCSM or designee will track all audit findings to assure that all findings are appropriately addressed and to trend audit findings for significant conditions adverse to quality. The Site CQCSM or designee will maintain the status of audit findings for active audits and prepare correspondence relating to overdue audit responses. When responses are overdue, the Site CQCSM or designee notifies the responsible organization by telephone that responses are overdue and prepares a memorandum or letter indicating a new response due date. If a request for extension of response is received, an evaluation will be made and a formal response submitted to the requesting organization.

The CB&I CAM or designee, upon receipt of responses to audit findings, will coordinate with the Auditor for the evaluation of responses. The responsible evaluator will document the results of the evaluation. Unacceptable responses will be noted together with the specific reason for rejection. The CB&I CAM or designee will prepare transmittal correspondence to the responsible organization to inform them of a new response due date.

Follow-up actions, possibly including re-audit of deficient areas, will be taken to verify whether corrective action is accomplished as scheduled. The Site CQCSM or designee will assure that verifications of corrective action implementation are accomplished and document the results of verification.

Following acceptance and verification of all corrective actions, an audit closure document will be issued by the Auditor to the same distribution as the audit report. The closure document will indicate that corrective actions have been satisfactorily completed and will contain a statement that the audit is closed.

7.6 Documentation

The following documents generated before, during, and after the audit process will be maintained in the record file system in accordance with Chapter 4.0 of this plan.

- Audit report
- Audit responses
- Audit closure letter
- Correspondence related to the audit.

8.0 Construction Inspections

The primary function of inspections is to establish the measures required to verify the quality of work performed and compliance to the specified requirements, including the inspection of materials and workmanship before, during, and after each work element.

8.1 Preparatory Inspections and Meetings

Along with representatives of RSA, the CAM, Site CQCSM, and Site Supervisor will conduct preparatory inspections/meetings at RSA-204. Preparatory inspections/meetings will be performed prior to starting definable features of work. Typical definable tasks and related inspection requirements can be modified based on project requirements. Where more than one work element is included in one work activity, one preparatory meeting may cover several work elements for the site. Likewise, a number of work activities, where feasible, can be combined into individual preparatory meetings. The preparatory inspection/meeting will be attended by the Army, applicable CB&I personnel and subcontractors involved with the feature of work, and responsible field QA/QC personnel. The Site CQCSM will be notified in advance to coordinate participation in the inspection. The preparatory meeting may include but not be limited to the following:

- Review the basic elements of the work.
- Review documentation and reporting requirements.
- Review pertinent contract requirements.
- Review materials and equipment documentation for required tests, submittals, and approvals.
- Review required QC inspections and test requirements.
- Establish that the preliminary work required to begin the feature of work is complete and conforms to approved drawings and submittal data.
- Establish that the required materials and equipment for commencement of the work are on hand or available for use on the feature of work and that all equipment is properly calibrated and in proper working condition.
- Ensure the securing of utility clearances (digging permits).

- Address basic site health and safety considerations.
- Establish hours of operation.

Preparatory inspections will be reported on the daily construction logs. The detailed results of the preparatory inspection will be documented.

Personnel performing work activities affected by a preparatory inspection will be directed in the acceptable level of the workmanship involved for the feature of work covered by the inspection.

8.2 Initial Inspections

The initial inspection may be conducted at the beginning of the work element. The inspection will be performed as soon as it is determined that a sufficient portion of the work element has been accomplished to evaluate the following criteria:

- Compliance with the CMI Work Plan, drawings, submittals, and other contract requirements
- Acceptable levels of workmanship
- Quality of materials
- Resolution of differences (when applicable).

Initial inspections will include participation of the responsible personnel, including appropriate subcontractors and the field QA/QC personnel involved with the work element. The Army will be notified in advance of each initial inspection to coordinate participation in the inspection. The initial inspections will be reported on the daily construction logs.

8.3 Follow-Up Inspections

Follow-up inspections will be performed throughout the course of work. The frequency of the follow-up inspections will depend on the extent of work being performed on each particular work element. Follow-up inspections will also be performed on completed work phase prior to starting subsequent phases. Deficiencies identified will be corrected in a timely manner or identified on a punch list which will be used as a tracking method until the work is completed and verified and the punch list item signed off. Deficiencies which would be made inaccessible for correction by subsequent work activities will be corrected and accepted prior to starting the new work.

The follow-up inspections will be reported on the daily construction logs and copies of the inspection forms as applicable.

8.4 Pre-Final Inspection

Near the completion of the work or increment thereof as established (e.g., completion of the erosion control structures such as silt fencing and construction entrance), the CB&I Site CQCSM shall conduct an inspection of the work and develop a punch list of items which do not conform to the approved CMI Plan. The list of deficiencies will become a part of the CQC documentation which will include the estimated date by which the deficiencies will be corrected. The CB&I Site CQCSM will then make a second inspection to ensure that all deficiencies have been corrected. Once this is completed, CB&I will notify the Site CQCSM that the site is ready for Pre-Final Inspection.

The Army will perform the Pre-Final Inspection to verify that the site work has been satisfactorily completed. A pre-final punch list may be developed by the Site CQCSM as a result of this inspection. The CB&I Site CQCSM will then make sure that all items on this list have been corrected and notify the CAM so that a Final Inspection with RSA can be scheduled. Items noted in the Pre-Final Inspection will be completed in a timely manner. These inspections and deficiency corrections will be accomplished within the time frame slated for completion of the project.

8.5 Final Inspection

The CAM, Site Supervisor, Site CQCSM, and Army representatives will be in attendance at this inspection. The RSA Representative will formally schedule the Final Inspection based upon completion of the results of the Pre-Final Inspection. Notice will be given to the Army at least 14 days prior to the Final Inspection and must include the CB&I's assurance that all the specific items previously identified as being unacceptable will be completed by the date scheduled for the Final Inspection.

CB&I will prepare the punch list. The punch list will identify all nonconforming or incomplete work. Upon completion of the punch list items, a second inspection will be conducted by RSA and CB&I to verify all of the items conform to the requirements. The QA/QC Director will be the final authority to accept that all of the punch list items have been corrected.

8.6 Scheduled Inspections

RSA will perform cap and land-use control inspections on a semiannual basis to ensure continued integrity of the remedy and to ensure that land use remains appropriately restricted per the environmental covenant.

General site inspections of the localized cap at Building 7689 shall be conducted semiannually to ensure that the integrity of the engineered cover is maintained.

The frequency of inspections can be scaled back to once per year once conditions of the cap have stabilized over a minimum period of two years. The inspection form is included in Appendix K. Cap inspection forms will be included in the annual CMI effectiveness reports. Prior to modifications in the frequency of inspection, the Army will submit a request to ADEM for review and approval.

8.7 Inspection Documentation

The Site CQCSM is responsible for the maintenance of the inspection records. Inspection records will be legible and clearly provide all information necessary to verify the items or activities inspected conform to the specified requirements or, in the case of nonconforming conditions, provide evidence that the conditions were brought into conformance or otherwise accepted by the Army.

9.0 Analytical Testing

The Army's IW QAPP (Shaw, 2013b) establishes the measures for management and control of analytical testing activities affecting the quality of the corrective measures. Control of construction (through performance of analytical QC testing) is the responsibility of CB&I (including its subcontractors) and which shall be done in accordance with the CMI Work Plan.

Task-specific programs of field controls, consisting of inspections and verification tests, will be utilized to verify that the CMI Work Plan is adhered to during implementation of the corrective measures, where applicable. However, the IW QAPP presents the overall general principles that are employed in any chemical analyses performed as part of the construction. Detailed analytical testing requirements for the RSA-204 CMI are provided in site-specific Uniform Federal Policy worksheets (Appendix F).

10.0 References

Alabama Soil and Water Conservation Committee (ASWCC), 2009, ***Alabama Handbook for Erosion Control, Sediment Control, and Stormwater Management of Construction Sites and Urban Areas***, March.

Shaw Environmental, Inc. (Shaw), 2013a, ***RCRA Facility Investigation Report, RSA-204, Oxidizer Facility, Building 7691, Operable Unit 10, Redstone Arsenal, Madison County, Alabama***, November.

Shaw Environmental, Inc. (Shaw), 2013b, ***Revision 2, Installation-Wide Quality Assurance Program Plan for the Program Management Contract, Volumes I and II***, ***U.S. Army Garrison, Redstone Arsenal, Madison County, Alabama***, May.

TABLES

Table 4-1

Typical Daily Construction Log
RSA-204
Redstone Arsenal, Madison County, Alabama

Date: _____

Contractor: _____ Project No.: _____

Contract Title: _____ Report No.: _____

Area: _____ Unit: _____ Work: Contract (✓)_____ WO # _____

Shift: _____ Hrs. Wkd: From_____ To _____ Weather _____
Temp. L H

Manpower	No.	Total Hrs.	Major Equipment	No.	Total Hrs.

Description of Work Performed Today:

Remarks by Contractor: (Delays, interruptions, deviations, extra work activities, unusual occurrences, etc., relevant to today's work.)

For Contractor: Title: Date:

USACE Comments and/or Exceptions:

For USACE: Title: Date:

Table 5-1

Nonconformance Report
RSA-204
Redstone Arsenal, Madison County, Alabama

Linked w/Variance No: Page __of __

Project Name:	Project Number:
Date of Issue:	Report Number:
-- Nonconformance Report --	
I. Description of the Nonconformance, include requirement violated: (by the person identifying the nonconformance) Identified by: Date:	
Root Cause of nonconformance:	
II. Recommended Corrective Action: (by the person identifying the nonconformance and the review committee)	
To Be Performed by:	Date:
To Be Verified by:	Date:
III. Corrective Action Implementation: (by those implementing the corrective action)	
Was Performed by:	Date:
Was Verified by:	Date:
How was the Corrective Action Verified?	
IV. Nonconformance Resolution, include action taken to preclude recurrance: (by the review committee)	
Affected Organization:	**-- Signatures --**
Distribution List:	Requested by: _____ Date: _____ (printed name and date) Signature:
	QC Approved by: _____ Date: _____ (printed name and date) Signature:
	Proj. Mgr. Approval:_____ Date: _____ (printed name and date) Signature:
	Client QA Approval: _____ Date: _____ (printed name and date) Signature:

Table 5-2

Nonconformance Report Tracking Register
RSA-204
Redstone Arsenal, Madison County, Alabama

PROJECT NO.
CONTRACT NO.
NONCONFORMANCE (NCR) REPORT TRACKING REGISTER

NCR NO.	DESCRIPTION OF NONCONFORMANCE	DATE ISSUED	DATE CLOSED	COMMENTS

Table 5-3

Stop Work Notice
RSA-204
Redstone Arsenal, Madison County, Alabama

Project Name/Location: _____ Project No. _____ D.O. No. _____

S.W.O. No. _____ Date: _____ Page _1_ of ___

1. Written Notice Issued to: Name: _____ Title: _____ Org.: _____	2. P.O. # or Activity: _____ 3. Location: _____ 4. Issued by (name): _____ Issued by (title): _____
5. Verbal Notice Issued to: Name: _____ Title: _____	Date: _____ Time: _____
6. Associated NCR No.: _____	7. Associated CAR No.: _____
8. Stop Work Order Condition Description:	Attachment _____
9. Remedial Action Required: By Whom: _____ Required Remedial Action Determined by: Project Manager: _____ CQA Director/Field CQA Coordinator: _____	Attachment _____ By When: _____ Date: _____ Date: _____
10. Follow-up of Remedial Action Taken: Verbal Notice to Resume Operations Given to: Name: _____ Title: _____ Stop Work Order Cancellation Authorized by: CQA Director/Field CQA Coordinator: _____	Attachment _____ Date: _____ Time: _____ Date: _____

Table 5-4

Stop Work Notice Log
RSA-204
Redstone Arsenal, Madison County, Alabama

SWO No.	Action Party/Organization	Subject	Date Issued	Date Closed

ATTACHMENT 1

FIELD INSPECTION CHECKLIST

CB&I Federal Services LLC	**Contract No:** W91ZLK-05-D-0006 **EPA ID No.** AL7 210 020 742	**Controlling Document:** **Corrective Measures Implementation Work Plan**
Location: Redstone Arsenal, Madison County, Alabama		
Inspection Type: Field Inspection Checklist **Subject:** RSA-204 CMI Work Plan	**Inspection Date:**	

Descriptor / Requirements	Comments	Results
4.0 Corrective Measures Implementation		
This section provides an overview of the field activities planned to complete corrective measures at RSA-204. Work presented in this section will be completed in accordance with the procedures described in the CMI Work Plan and other approved documentation as appropriate. RSA-204 CMI Work Plan Chapter 4.0		
4.1 General Scope		
The general scope of work (SOW) includes the following: • Mobilization/demobilization • Utility clearance and marking • Vegetation clearing • Well installation (1 well) • Baseline groundwater sampling (26 wells) • Well closure (4 wells) • Removal of blast berms (north side of Building 7689 and along western side of Building 7688) • Surveying and marking the newly installed well, proposed injection locations, excavation areas, and the localized cap (Building 7689) • ISEB treatment via well points and DPT injection • Construction of surface water and erosion controls • Excavation of contaminated soil, sump near Building 7689, and septic tank • Confirmation sampling and analysis of the excavated areas • Waste characterization sampling • Transport and disposal of excavated soils as special waste (nonhazardous) at a Subtitle D landfill • Backfilling of excavation areas using clean borrow soil • Construction of impermeable cap adjacent to Building 7689 • Site restoration, including application of topsoil, revegetation with approved grass mixtures, replacement of asphalt driveways and roads (as necessary), and replacement of berms and monitoring wells • Monitored natural attenuation and long-term monitoring (groundwater sampling and reporting). RSA-204 CMI Work Plan Chapter 4.0		

Descriptor / Requirements	Comments	Results
4.1.1 Procurement and Subcontracting		
Subcontracted services and imported materials required for the completion of the project may include the following: • Utility and steam line relocation • Well closure • Drilling, including well installations and DPT injections • Well development • Groundwater sampling • Vegetation clearing and berm removal and reconstruction • Sump and septic tank removal • Analytical laboratory services • Waste transportation and disposal • Surveying • Common fill • Structural fill • Topsoil • Aggregate - crusher-run, riprap, drainage stone • Storm water erosion and sediment controls • Emulsified vegetable oil (substrate), diammonium phosphate (DAP), and yeast extract or an equivalent supplemental nutrient source • Geosynthetic clay liner • Asphalt and concrete repair • Seed, fertilizer, and mulch • Heavy-duty plastic sheeting RSA-204 CMI Work Plan Chapter 4.0		

Descriptor / Requirements	Comments	Results
4.1.1 Procurement and Subcontracting (Continued)		
The following equipment may be utilized to complete field remediation activities: • Excavator to excavate contaminated soil • Front-end loader to consolidate soil and move fill material • Track dozer to move, place, and prepare fill material • Steel-wheeled compactor to compact fill material. • Water truck (or equivalent) for site dust control and hydration of imported material for compaction • Portable fuel tank (mounted on pickup truck) • Storage tanks for ISEB treatment, with hose and plumbing connections • Direct-push / hollow-stem auger drill rig • Injection pump • Miscellaneous support equipment (e.g., portable storage, computers, copier, fax machine, radios, relief station, eyewash, etc.) Support equipment and materials will be procured through equipment vendors and scientific supply vendors and shipped directly to the site. Office machines in Building 7471 (7471 Maple Road) will be used to support the RSA-204 work. RSA-204 CMI Work Plan Chapter 4.0		
4.1.2 Field Personnel		
Field personnel required to complete the field activities may include the following: • Site supervisor • Site safety officer • Project business administrator • Field construction quality control site manager • Two or three equipment operators • Two laborers The number and schedule of personnel will be adjusted during the project as required. RSA-204 CMI Work Plan Chapter 4.0		

CB&I Federal Services LLC	**Contract No:** W91ZLK-05-D-0006 **EPA ID No.** AL7 210 020 742	**Controlling Document:** **Corrective Measures Implementation Work Plan**
Location: Redstone Arsenal, Madison County, Alabama		
Inspection Type: Field Inspection Checklist **Subject:** RSA-204 CMI Work Plan	**Inspection Date:**	

Descriptor / Requirements	Comments	Results
4.2 Preliminary Activities		
Preliminary activities include mobilization, requirements for base access, obtaining digging permits and utility marking, surveying, well installation, and protection of existing features. All field personnel will follow this work plan, as well as other controlling documents, such as the RSA Installation-Wide (IW) Work Plan, the IW Safety and Health Plan, the IW Quality Assurance Program Plan (QAPP), the site-specific Construction QC Plan, and the site-specific Safety and Health Plan. RSA-204 CMI Work Plan Chapter 4.0		
4.2.1 Mobilization		
Mobilization will include deployment of personnel, equipment, subcontractors, and materials necessary to commence CMI activities. RSA-204 CMI Work Plan Chapter 4.0		
After mobilization, site-specific training will be conducted for CB&I personnel and subcontractor personnel. This training will include health and safety requirements, project objectives, entry onto RSA, site access control, security procedures, and communications procedures. RSA-204 CMI Work Plan Chapter 4.0		
4.2.2 Access to Redstone Arsenal		
Badge requests for access to RSA should be submitted two weeks ahead of the date needed to allow for approval and processing by the RSA host organization. New CB&I personnel and subcontractor personnel will register at the Redstone Arsenal Visitors Center at Gate 9. Personnel with prior approval from a host RSA organization will be issued a personnel badge upon presentation of proper identification. Temporary passes may be required for some vehicles.		
Personnel may access the RSA via any active gate, but should note that gate access hours vary. Commercial trucks must pass through the inspection facilities at either Gate 1 or Gate 9 each time they enter RSA. RSA-204 CMI Work Plan Chapter 4.0		

Descriptor / Requirements	Comments	Results
Permitting required prior to beginning CMI activities is a digging permit administered by the Directorate of Public Works. The digging permits include locating and marking any utilities which may be present in the vicinity of the proposed intrusive work. Notification should be by telephone to 256.876.9881 within 14 days of beginning intrusive work. RSA-204 CMI Work Plan Chapter 4.0		
Digging permits must be renewed every 30 days. Renewals should be requested at least 1-1/2 weeks prior to expiration of the current digging permit to avoid temporary shutdowns. RSA-204 CMI Work Plan Chapter 4.0		
4.2.3 Site Control		
CB&I will use the existing fence, temporary construction fencing materials, barricades, and warning tape, as necessary, to delineate the site exclusion zone, contamination reduction zone, and site support zone in compliance with the SSHP (Appendix D). RSA-204 CMI Work Plan Chapter 4.0		
Warning signs will be posted at conspicuous locations around the perimeter of the construction areas to discourage unauthorized entry. Sign spacing will be approximately 50 feet. An equipment storage and material laydown area will be designated during mobilization. RSA-204 CMI Work Plan Chapter 4.0		
4.2.4 Storm Water Erosion and Sediment Controls		
Storm water management and erosion and sediment control will be provided according to the *Alabama Handbook for Erosion Control, Sediment Control and Stormwater Management on Construction Sites and Urban Areas* (Alabama Soil and Water Conservation Committee [ASWCC], 2009) (Appendix G of the CMI work plan). RSA-204 CMI Work Plan Chapter 4.0		
Installation of temporary controls will be coordinated to maintain effective and continuous control of erosion and pollution. The primary erosion control techniques used will be silt fencing and hay bales. RSA-204 CMI Work Plan Chapter 4.0		

Descriptor / Requirements	Comments	Results
Erosion control devices will be inspected weekly and also within 72 hours of any qualifying precipitation event (any precipitation of 0.75 inch or greater in any 24-hour period). Sediment deposits will be manually removed from the silt fence after each qualifying rainfall event or when sediment reaches one-half of the barrier height. Removed sediment will be added to the contaminated soil for subsequent disposal. RSA-204 CMI Work Plan Chapter 4.0		
Damaged erosion control devices and damaged areas around and beneath the devices will immediately be repaired. Upon completion of the project, erosion and sedimentation control devices will be removed. RSA-204 CMI Work Plan Chapter 4.0		
4.2.5 Vegetation Clearing		
CB&I will clear brush/vegetation currently covering the injection and excavation areas at RSA-204 in preparation for the groundwater treatment and soil removal action. It is expected that manual and mechanical (e.g., chainsaw, line trimmer, heavy equipment) means will be used to accomplish the brush/vegetation clearing task. Vegetation will be chipped for mulch or transported to the C&D landfill. RSA-204 CMI Work Plan Chapter 4.0		
4.2.6 Locating, Marking, and Surveying of Injection Locations and Excavation Areas		
A licensed land surveyor will be subcontracted to delineate the project work boundary, mark the DPT injection locations and excavation areas, mark the boundaries of the localized cap at Building 7689, and set the grades prior to and during placement of excavated material and again during backfilling activities. RSA-204 CMI Work Plan Chapter 4.0		
The surveyor will locate these areas based on coordinates provided by CB&I and will mark items in the field with highly visible wooden stakes, tape, or pin flags. Surveying methods will follow the procedures specified in the construction quality assurance plan (CQAP) provided in Appendix E. RSA-204 CMI Work Plan Chapter 4.0		
4.2.7 Well Installation		
A new interface monitoring well (204-RS2824) will be installed at the site prior to baseline groundwater sampling. The well will be installed and developed in accordance with SOPPs No. 8, 17, and 20.		

Descriptor / Requirements	Comments	Results
4.3 Baseline Groundwater Sampling and Well Closure and Replacement		
Prior to substrate injection, baseline groundwater sampling will be conducted at 26 overburden, interface, and shallow bedrock monitoring wells adjacent to the treatment areas. Analyses will be conducted for VOCs, perchlorate, explosives, dissolved gases, select total and dissolved metals, anions, iron, total organic carbon, alkalinity, and general water quality parameters (pH, temperature, conductivity, turbidity, ORP, and DO) (Appendix F). Combustible gases and depth to groundwater will also be measured in the field during sampling. RSA-204 CMI Work Plan Chapter 4.0		
Groundwater sampling will be performed using low flow purging and sampling techniques. RSA-204 CMI Work Plan Chapter 4.0		
Monitoring wells located within the proposed excavation footprint will be closed prior to the excavation activities and replaced as part of site restoration activities. The following four monitoring wells are expected to be affected by excavation activities: 204-RS2669, 204-RS2684, 204-RS2671, and K142-RS1224. The total depth of these wells ranges from 25 to 65 feet below ground surface (bgs). Following completion of excavation activities, replacement wells (204-RS2791 through 204-RS2794) of similar depth and construction will be installed for each well disturbed by excavation activities (see also Section 4.11.4 of CMI work plan). RSA-204 CMI Work Plan Chapter 4.0		
Well closure will be performed in accordance with Standard Operating Project Procedure (SOPP) 21.0 (Shaw, 2013c) and in accordance with the Alabama Environmental Investigation and Remediation Guidance (ADEM, 2005). An informal well closure plan will be submitted to ADEM for approval prior to well closure activities. The wells will be closed in place by filling the screened interval with clean silica sand 2 feet above the top of the screen. RSA-204 CMI Work Plan Chapter 4.0		
After allowing time for the silica sand to settle, a 2-foot-thick bentonite seal will be added above the silica sand. Bentonite pellets are recommended and shall be poured slowly to avoid bridging. The bentonite seal will be allowed to hydrate per the manufacturer's instructions. RSA-204 CMI Work Plan Chapter 4.0		

Descriptor / Requirements	Comments	Results
Neat grout will then be emplaced above the bentonite seal with a tremie pipe for sealing the well. Neat grout is a mixture of Portland American Society for Testing and Materials Type I or II cement, water, and bentonite. The organic-free bentonite (granular) will be added at a rate of 2 to 5 pounds of bentonite per 94 pound sack of cement to produce a grout that is 2 to 5 percent bentonite by weight. This will be mixed with 5 to 7.5 gallons of water to create a pumpable slurry. RSA-204 CMI Work Plan Chapter 4.0		
The pads, posts, and casings for the wells will be removed during the excavation activities. The well closure activities will be documented on the well closure form in SOPP No. 1, *Field Documentation* (Shaw, 2013c). A formal well closure report will be submitted to ADEM following well closure activities. RSA-204 CMI Work Plan Chapter 4.0		
Following the completion of backfilling operations at RSA-204, replacement wells will be installed for those located within the injection and excavation areas (see Section 4.11.4 of CMI work plan). Drilling for the replacement monitoring wells will be conducted using hollow-stem auger methods. These methods are outlined in SOPP No. 20, *Drilling Unconsolidated Material* (Shaw, 2013c). Well installation procedures are provided in SOPP No. 17, *Monitoring Well Installation* (Shaw, 2013c). RSA-204 CMI Work Plan Chapter 4.0		
The new wells are anticipated to be 2-inch diameter Schedule 40 polyvinyl chloride, with 10-foot screens, and completed with an aboveground protective casing and guard posts. Upon completion, the well will be developed in accordance with SOPP No. 8, *Well Development* (Shaw, 2013c). RSA-204 CMI Work Plan Chapter 4.0		
Existing monitoring wells within close proximity of the work zone will be conspicuously marked in the field for protection during construction. Although CB&I will safeguard existing monitoring wells, if a monitoring well is inadvertently damaged, the well will be closed. Damaged wells required as part of the RSA-204 corrective measures activities will be replaced in kind. RSA-204 CMI Work Plan Chapter 4.0		

Descriptor / Requirements	Comments	Results
4.4 Berm Removal		
Following completion of the baseline sampling event, the earthen blast berms located along the north side of Building 7689 and along the western side of Building 7688 will be leveled to grade because of their location within the injection/excavation areas and the soil stockpiled in a separate portion of the site until construction activities are complete. Both earthen blast berms will be reconstructed to Army specifications during site restoration activities using only the stockpiled berm soil with additional clean backfill, as required. RSA-204 CMI Work Plan Chapter 4.0		
4.5 Groundwater Treatment Activities		
The ISEB activities will include preparation of the application and obtaining an underground injection control (UIC) permit (see Appendix I), mobilization/demobilization, the injection of the selected ISEB amendments, post-injection sampling, and reporting. RSA-204 CMI Work Plan Chapter 4.0		
Prior to the start of the corrective measures as part of design optimization, 21 well-point locations (and up to 10 stepout contingency locations) will be placed around the outside of each of the 10,000 µg/L plume locations. The proposed locations shown on Figure 4-1 contain a "204INJPZ" prefix as part of their location codes; 12 well points are planned for the northern area and nine are planned for the southern area. These well-point locations will serve a dual purpose being used both during design optimization to refine the perchlorate plume contours and during groundwater treatment to inject amendments at the perimeter of the source areas. RSA-204 CMI Work Plan Chapter 4.0		
A solution of EVO and nutrient amendments will be injected for the groundwater ISEB prior to the soil excavation activity. Amendments will first be injected into the perimeter plume core well points; the plume core DPT injections (locations on Figure 4-1 containing "204INJ" in the prefix of the location code) will follow after the perimeter well points are completed. The EVO solution will be injected into the contaminated saturated zone from bedrock to the top of the groundwater table using DPT. Pressurized injections of the solution into overlapping intervals will be used to enhance the anaerobic degradation of perchlorate in groundwater within the treatment zone. RSA-204 CMI Work Plan Chapter 4.0		

Descriptor / Requirements	Comments	Results
The EVO and nutrient amendments will be used to target the two areas that have perchlorate concentrations exceeding 10,000 µg/L. The EVO solution will be injected first within the existing well points (installed as part of design optimization) along the perimeter of the source areas (e.g., outer edge of the 10,000 µg/L perchlorate plume contour in both areas) (Figure 4-1). RSA-204 CMI Work Plan Chapter 4.0		
Next, pressurized injections of the amendments will be conducted in overlapping intervals using DPT at 37 injection well points (locations with 204INJ prefixes) within the source areas. Twenty-one locations are planned for the northern area and 16 locations are planned for the southern area (Figure 4-1). Injections will be conducted either top-down or bottom-up, depending on which is found to work better in the soils present at RSA-204. The EVO solution will be initially injected on 2.5-foot intervals at depths ranging from the top of bedrock to the groundwater table surface. This interval will be adjusted based on observations during injection activities. RSA-204 CMI Work Plan Chapter 4.0		
A second round of DPT injections is planned approximately 1 year after the initial EVO solution injection to address any remaining residual hot spots or perchlorate rebound areas within the treatment area. Approximately seven DPT locations for both source areas, or 20 percent of the 37 DPT injection locations, have been assumed in this second round of injections. RSA-204 CMI Work Plan Chapter 4.0		
The reagent concentrations may be adjusted based on the observed site conditions. The reagent concentrations may be adjusted to provide the required amount of individual reagents to degrade the contaminants while limiting both excess reagent, which may result in excessive methane production, and insufficient reagent, which potentially results in incomplete degradation. Methane generation will be monitored per the safety and health plan (Appendix D). RSA-204 CMI Work Plan Chapter 4.0		

Descriptor / Requirements	Comments	Results
4.5.1 Temporary Facilities and Work Areas		
Upon mobilizing to the site for reagent injection, a temporary facility or facilities will be established adjacent to the treatment areas within a fenced equipment staging and storage area to store the reagent and reagent mixing vessels. Placement of the tanks and the storage area will be coordinated with RSA. A nearby hydrant connection will be required, which will be fitted with a back flow preventer and a flow meter. Upon completion of the injection effort, the temporary facilities will be demobilized and the site returned to its original condition. RSA-204 CMI Work Plan Chapter 4.0		
4.5.2 Injection Reagent Mixing		
Water will be transferred into a reagent mixing tank stationed adjacent to the injection pump for the preparation of the EVO solution. RSA-204 CMI Work Plan Chapter 4.0		
For the purposes of calculating dosages, the target injection volume at any given injection point is 7 percent of the estimated average effective groundwater volume in the aquifer, using an estimated effective porosity of 2 percent. RSA-204 CMI Work Plan Chapter 4.0		
Diammonium phosphate (DAP) and yeast extract will be added as microbial nutrients to make up the EVO solution. The DAP will be added according to a 100:10:1 carbon:nitrogen:phosphorus ratio in relation to the amount of EVO needed. The yeast extract or equivalent will be added at a 10% ratio by weight to the DAP amendment. Approximately 0.2 pounds of DAP and 0.02 pounds of yeast extract will be added per pound of carbon in the EVO raw material. RSA-204 CMI Work Plan Chapter 4.0		

Descriptor / Requirements	Comments	Results
For the northern treatment area, 12 injection well points and 21 DPT locations are planned using an estimated 15-foot radius of influence. Approximately 2,500 gallons of EVO solution will be utilized, consisting of approximately 3,500 pounds of EVO, 585 pounds of DAP, and 60 pounds of yeast extract or the equivalent. In the southern treatment area, 16 DPT locations are planned along with nine injection well points. Approximately 700 gallons of EVO solution will be used, consisting of approximately 1,300 pounds of EVO, 220 pounds of DAP, and 20 pounds of yeast extract or the equivalent. A follow-up round of DPT injections is planned for 20 percent of the injection locations and intervals following the same EVO solution concentrations. RSA-204 CMI Work Plan Chapter 4.0		
4.5.3 Material Handling and Storage		
All materials will be stored under ambient temperature in the fenced equipment staging and storage area. RSA-204 CMI Work Plan Chapter 4.0		
The EVO will be transferred via pumps. The DAP and yeast extract or the equivalent will be added by hand to the reagent mix tank. There are no significant hazards associated with the previously discussed injected products. Material safety data sheets are provided in the Site-Specific Safety and Health Plan (Appendix D). RSA-204 CMI Work Plan Chapter 4.0		
4.5.4 Reagent Injection		
A high pressure/flow rate delivery process was selected for the injections at RSA-204. The reagents will be direct injected using a variable-speed positive displacement pump (piston type) capable of generating up to 1,000 pounds per square inch of pressure at a flow rate of up to 50 gallons per minute (gpm). The DPT injections will begin at the perimeter injection locations and then work into the center of the plume to reduce the potential for the injections to cause the plume to migrate. RSA-204 CMI Work Plan Chapter 4.0		

Descriptor / Requirements	Comments	Results
The injection borings will be backfilled by tremie grouting a neat cement/bentonite grout in accordance with RSA and ADEM requirements. New injection borings will be required for the second round of injections; locations and number of borings will be determined following review of the data from the first round of injections. RSA-204 CMI Work Plan Chapter 4.0		
The DPT injections will use a pressure activated injection tip with a check valve to allow lateral delivery of the reagent and prevent backflow. The target flow rate for the injections is approximately 20 gallons per minute (gpm), which may be adjusted based on observations made during the injections. Injections will begin at approximately 20 pounds per square inch and increased until the flow rate reaches the target flow rate or the appropriate amount of reagent is injected. Injection pressures will be closely monitored during the injections. RSA-204 CMI Work Plan Chapter 4.0		
4.5.5 Field Records		
A CB&I field geologist or engineer will record all injection activities, specifically the following: 1. Amount of reagent materials used per injection interval and point 2. Injection volumes per interval and point 3. Any reagent daylighting and estimated quantity 4. Injection locations completed each day on a working map 5. Personnel on site and times crews enter and leave the site. RSA-204 CMI Work Plan Chapter 4.0		
4.6 Excavation Activities		
The limits of the two soil excavation areas along with the proposed stockpile locations are depicted on Figure 4-2 of the CMI work plan. Excavation will be accomplished according to the Safety and Health Regulations for Excavations (Occupational Safety and Health Administration [OSHA] 29 Code of Federal Regulations Part 1926 Subpart P). For excavations deeper than 4 feet, soils will be excavated to maintain stable sidewalls (i.e., shield system, sloped or benched to 1½:1 horizontal:vertical). Spoils must be placed a minimum of 3 feet from the edge of the excavation. Soil generated by benching/sloping near the perimeter of the excavations will be segregated and sampled to determine if it may be used for backfill. RSA-204 CMI Work Plan Chapter 4.0		

Descriptor / Requirements	Comments	Results
Excavations will be dug to the average depth to groundwater at this site (Shaw, 2013a). For the southeastern excavation (Excavation Area 1), soils will be excavated to 17 feet below grade and to 15 feet below grade for the central excavation (Excavation Area 2) per Table 4-1 of the CMI work plan. If groundwater is encountered at a depth shallower than the average depth to groundwater, the excavation will go no deeper than the depth groundwater is encountered. RSA-204 CMI Work Plan Chapter 4.0		
Water level measurements collected from wells closest to the excavation areas in the months prior to the implementation of the corrective measures will be used to calculate a defensible average depth to water to be used as the excavation target depth. It is anticipated that approximately 12,062 cubic yards will be excavated from the two excavations. RSA-204 CMI Work Plan Chapter 4.0		
A portion of Excavation Area 1 is located adjacent to Building 7689. Where the stability of adjoining buildings, walls, or other structures is endangered by excavation operations support systems shall be provided, such as shoring, bracing, or underpinning to ensure the stability of the structure. A professional engineer will perform an evaluation to determine the safe distance from the building for which excavation may be safely performed to ensure the safety of the workers and the stability of the structure. RSA-204 CMI Work Plan Chapter 4.0		
Asphalt pavement or concrete surfaces (e.g. roadways and sidewalks) will be saw cut prior to excavation. Any clumps of soil will be removed from the concrete and asphalt and stockpiled with other soil from the area. The concrete debris will be transported to the RSA C&D landfill or another appropriately permitted facility for disposal. Asphalt will be transported to the RSA recycling program's designated location for recycling. RSA-204 CMI Work Plan Chapter 4.0		
The sump located in the southeastern excavation and the septic tank in the central area will be removed through mechanical (e.g., trackhoe ram head, etc.) means and transported to the C&D landfill or recycled as appropriate. Since perchlorate is not a hazardous constituent, swipe testing of the structures will not be required prior to disposal/recycling. RSA-204 CMI Work Plan Chapter 4.0		

Descriptor / Requirements	Comments	Results
The excavated material will be staged on impervious material such as plastic sheeting and covered with waterproof material (i.e., tarpaulin or 10-mil plastic sheeting). Containment should control runoff, leaching, or fugitive dust emissions. RSA-204 CMI Work Plan Chapter 4.0		
Dust at the site will be controlled with water using a water truck with hose and sprayers and mulch such as straw. CB&I will be apply water to dry exposed areas until the surface is wet and repeat as needed. Visual observation will assure that water will be applied at rates so that runoff does not occur. In addition, all other equipment used at the site during cleanup operations will be operated in a manner that prevents further migration of contamination. Polymers, tackifiers, stabilizers, or chlorides will not be used for dust control. An action level of ½ the OSHA particulate not otherwise specified threshold respirable fraction (2.5 milligrams per cubic meter) within or directly downwind of the work areas will be used to determine when dust suppression is needed. Dust levels will be monitored using a Data Ram PDR 1000 or equivalent real-time aerosol monitor. RSA-204 CMI Work Plan Chapter 4.0		
4.7 Confirmation Sampling		
Sidewall samples will be collected around the perimeter of the soil excavation areas at a maximum spacing of 25 feet between samples. A multi-point composite sample will be collected for each specified sidewall depth interval (see Figure 4-5 of the CMI work plan for compositing plan). Because the depth of the excavation is expected to be 15 feet bgs at the central area (Excavation Area 2), four sidewall samples per 25-foot length of sidewall (intervals of 0-3, 3-7, 7-11, and 11-15 feet below ground surface) are planned. The excavation is expected to be 17 feet bgs at the southeastern area (Excavation Area 1). Therefore, four sidewall sample intervals per 25-foot length of sidewall (intervals of 0-5, 5-9, 9-13, and 13-17 feet below ground surface) will be collected and composited. Each confirmation sample will represent a maximum sidewall area of 100 square feet. The points will include a center point of the 25-foot sidewall section plus aliquots from the upper and lower left and right quadrants of the sidewall section. If the sidewall confirmation samples do not achieve the CGs, the excavation will be expanded a minimum of two feet and then resampled. Any drains or outfalls that occur in the excavations will be targeted for sampling. RSA-204 CMI Work Plan Chapter 4.0		

Descriptor / Requirements	Comments	Results
Confirmation samples will not be collected from the floor of the excavation at RSA-204 because the excavation depths (17 feet in the southeastern area and 15 feet in the central area) are based on the average depth to groundwater rather than contaminant depth. This depth includes the capillary fringe zone of the water table. Visual observation of soil mottling or other physical indicators may be used to determine the depth of the capillary fringe. The capillary fringe zone in the high-clay content soils present at RSA is approximately 3 feet thick; this depth will be used if no capillary fringe is apparent based on physical indicators. Therefore, if perchlorate concentrations in the deepest confirmation samples are found to exceed the CG, an additional confirmation sample may be collected (in a separate sample collection event) from the zone above the capillary fringe. The decision to expand the excavation laterally at depth will be based on the results from the confirmation sample collected above the capillary fringe. RSA-204 CMI Work Plan Chapter 4.0		
Confirmation samples will be collected using routine quality assurance/quality control sample frequencies (i.e., 10 percent field duplicates, 5 percent matrix spike/matrix spike duplicate). All sample containers, preservatives, and holding times will conform to the requirements specified in the DCQAP (Appendix F). The confirmation soil samples at RSA-204 will be analyzed for perchlorate using EPA Test Methods. RSA-204 CMI Work Plan Chapter 4.0		
Sample documentation, custody, packaging, and shipping will follow the procedures specified in the DCQAP. Custody will be maintained at all times by the CB&I sampling team prior to shipment to the analytical laboratory using standard chain-of-custody forms. RSA-204 CMI Work Plan Chapter 4.0		
All analytical data generated from this project will be managed in accordance with the procedures specified in the DCQAP (Appendix F). RSA-204 CMI Work Plan Chapter 4.0		

Descriptor / Requirements	Comments	Results
4.8 RDW/IDW Management		
The management of excavated soils is discussed in Sections 4.9 and 4.10. Other remediation-derived waste and investigation-derived waste (IDW) generated during the CMI activities at RSA-204 are expected to include soil cuttings, decontamination fluids, purge water, and disposable personal protective equipment (PPE). All IDW will be containerized, labeled, and stored in compliance with the provisions of AAC 335-14 as applicable and as discussed in the Alabama Environmental Investigation and Remediation Guidance (AEIRG) (ADEM, 2005). PPE that is contaminated by site media will be disposed of with the contaminated waste stream (i.e., PPE generated during soil excavation will be disposed at the Subtitle D landfill). PPE that is uncontaminated will be placed in trash bags and disposed in a dumpster at the CB&I field office (Building 7471) as normal household trash. Other types of IDW, if generated, will be managed in accordance with Table 2 of Appendix G of AEIRG (ADEM, 2005). RSA-204 CMI Plan Section 4.0		
For IDW considered to be nonhazardous using generator knowledge and field observations, soil cuttings and liquid waste will be containerized and stored on site pending sampling and analysis. Analytical testing and subsequent evaluations will be performed to determine if soil can be left on site or disposal at a Subtitle D landfill is needed. Sampling and analysis of IDW are specified in the DCQAP in Appendix F. Examples of nonhazardous soil IDW disposal practices for RSA-204 include soil disposal at a Subtitle D landfill. For nonhazardous water IDW, possible management options include processing through RSA's sewage treatment plant or an appropriate RCRA-permitted facility. RSA-204 CMI Plan Section 4.0		
In the event that any soil IDW is determined to be hazardous, contingency actions will be taken to manage and dispose the waste as specified in SOPP No. 4.0, *Investigation Derived Waste* (Shaw, 2013c). A RCRA hazardous waste determination/evaluation is required by AAC 335-14-3-.01(2) and will be made utilizing waste identification criteria outlined in AAC R. 335-14-2-.01 through 335-14-2-.04. IDW believed to be hazardous will be containerized in 55-gallon drums or other suitable containers with tight-fitting lids or other covers. Presumed hazardous IDW will be labeled, moved to a satellite accumulation area or 90-day storage within 72 hours, or managed on site in an on-site 90-day storage area, as specified in SOPP No. 4.0. RSA-204 CMI Plan Section 4.0		

Descriptor / Requirements	Comments	Results
Analytical results from soil and groundwater IDW samples will be used to document if the waste is hazardous or nonhazardous and, for nonhazardous IDW, to determine the contaminant concentrations for disposal purposes. Types of analyses are site specific but may include toxicity characteristic leaching procedure (TCLP) VOCs, TCLP SVOCs, and TCLP metals. Waste for which TCLP results exceed limits specified at AAC 335-14-2-.03, Table 1, will be treated and disposed as a hazardous waste. EPA's Off-site Rule will be utilized to ensure that all RDW/IDW shipping offsite will be received at EPA-audited and -approved facilities. RSA-204 CMI Plan Section 4.0		
4.9 Waste Characterization Sampling		
Contaminated soils planned for disposal in Alabama will be stockpiled during the excavation at RSA-204. The stockpiles will be divided into individual decision units for sampling. Each decision unit will have a maximum volume of 200-cubic yard volumes. Grab samples will be randomly retrieved from three exterior points of the pile from a depth between 0 and 2 feet. Two additional samples will be taken from the interior of the pile at a depth between 2 to 5 feet. The grab samples from the five points within each decision unit will be composited. Each of these composites representing 200 cubic yards will be tested for perchlorate analysis. No additional quality assurance/quality control samples (other than the method-required batch quality control) will be required for the waste characterization samples. RSA-204 CMI Work Plan Chapter 4.0		
In addition, "clean" stockpiles consisting of soils with perchlorate concentrations that are expected to be below the CG of 1.7 mg/kg will be generated at each site. Composite samples will be collected from each clean stockpile at a frequency of one sample per every 200 cubic yards. These soil samples will be five-point composites and will be submitted to the laboratory for analysis of perchlorate. If the perchlorate concentrations are below 1.7 mg/kg, the soil will be deemed suitable for use as backfill. If the perchlorate concentrations exceed 1.7 mg/kg, the soil will be disposed of with the contaminated soil stockpile as nonhazardous waste. RSA-204 CMI Work Plan Chapter 4.0		

Descriptor / Requirements	Comments	Results
The waste characterization sample results will be compared to the regulatory levels for metals. Based on similar soil excavation activities at other RSA sites, the perchlorate-contaminated soils at RSA-204 are not expected to be characteristically hazardous. It is expected that the excavated soils at RSA-204 will be managed as a nonhazardous special waste and disposed in a Subtitle D landfill. RSA-204 CMI Work Plan Chapter 4.0		
The waste characterization results will be submitted to ADEM for approval, and an ADEM waste certification number will be obtained prior to disposal of the excavated soils. RSA-204 CMI Work Plan Chapter 4.0		
4.10 Waste Soil Transportation and Disposal		
CB&I will use a licensed transportation and disposal subcontractor to complete these activities. It is assumed that the soil will be disposed as special waste (nonhazardous) at a Subtitle D landfill. Transportation and disposal of the excavated waste will begin after approval by ADEM and the selected waste disposal facility. Prior to transport, a RSA representative will review and sign the waste manifests. RSA-204 CMI Work Plan Chapter 4.0		
CB&I will document the quantities of waste loaded onto the dump trucks and facilitate the Bill of Lading documentation. Transportation will comply with all U.S. Department of Transportation regulations. RSA-204 CMI Work Plan Chapter 4.0		
CB&I will coordinate with the transporters so that the waste will be shipped to arrive on schedule at the landfill. CB&I will receive written approval from the landfill prior to shipping waste to their facility. The landfill will provide CB&I with a certificate of disposal for each load received and processed. RSA-204 CMI Work Plan Chapter 4.0		
4.11 Cap Construction and Post-Excavation Activities		
4.11.1 ISEB Application		
In order to enhance and extend the ISEB treatment of the source area groundwater, EVO solution will be applied over the floor of the excavation areas prior to backfilling. Approximately 20,000 gallons of a 1-to-5 percent EVO solution will be added. RSA-204 CMI Work Plan Chapter 4.0		

Descriptor / Requirements	Comments	Results
4.11.2 Backfilling		
Upon completion of all soil excavation activities, CB&I will obtain fill material from a borrow area on RSA or another approved off-site borrow source or equivalent (the fill material volume assumes 30 percent compaction). If sampling of the borrow source material has not been conducted, CB&I will sample the material to confirm it is acceptable for use as backfill at the sites. The borrow material sampling, if required, will include one 5-point composite sample analyzed for TCL SVOCs, TCL pesticides/PCBs, perchlorate, and target analyte list metals and one sample analyzed for TCL VOCs (Appendix F). RSA-204 CMI Work Plan Chapter 4.0		
The analytical results for target analyte list metals will be screened against background screening values and residential soil PSVs as supplemented by a site-to-background evaluation, if needed. Soil concentrations for VOCs, SVOCs, and pesticides/PCBs will be screened against their respective residential soil PSVs to demonstrate that the material is acceptable for use. If an existing borrow source is utilized, the analytical parameters and acceptance limits will be at least as stringent as those proposed for new borrow sources. RSA-204 CMI Work Plan Chapter 4.0		
Excavated material will be replaced with locally available backfill material that is best suited for the anticipated future use. A layer of stone will be added across the bottom of the excavation to cover the EVO liquid prior to backfilling. This stone layer will allow for proper backfill compaction after application of the EVO. Approximately 16,402 cubic yards of fill material is expected to be needed. Appropriately graded structural fill will be used to backfill around existing and/or future building foundations. The backfill material properties, placement methods, and testing requirements will generally conform to the guidance provided in Unified Facilities Guide Specifications for Earthwork Section (Appendix G). The fill material will be dumped near each excavation area using a dump truck and placed in lifts no greater than 1 foot high, and each lift will be compacted prior to placement of the next lift. Any stockpiled soil removed during excavation and determined to be “clean” by sampling will also be placed in the excavation. RSA-204 CMI Work Plan Chapter 4.0		

CB&I Federal Services LLC	**Contract No:** W91ZLK-05-D-0006 **EPA ID No.** AL7 210 020 742	**Controlling Document:** **Corrective Measures Implementation Work Plan**
Location: Redstone Arsenal, Madison County, Alabama		
Inspection Type: Field Inspection Checklist **Subject:** RSA-204 CMI Work Plan	**Inspection Date:**	

Descriptor / Requirements	Comments	Results
Structural fill will be placed and spread to a loose-lift thickness that is appropriate for the type of material and compaction equipment being used. Structural fill will be used to support driveways, roads, and any additional paved areas. Compaction will be accomplished using industry-accepted heavy tamping rollers, heavy rubber-tired rollers, heavy vibratory compactors, or heavy sheepsfoot rollers, except where space restrictions do not allow their use. In that case, light steel-drum, vibratory rollers; hand-operated, vibratory, plate compactors; or power tampers will be used. Fill adjacent to structures will be placed in a manner that will prevent damage to the structures and will allow the structures to assume the loads from the fill gradually and uniformly. Height of fill adjacent to a structure shall be increased at approximately the same rate on all sides of the structure. RSA-204 CMI Work Plan Chapter 4.0		
Typically, structural fill is compacted to a dry density that is 95 percent of maximum dry density determined by ASTM D1557. Care will be taken to moisture condition the fill during placement and compaction. The moisture content of fill including surfacing material, structural fill, and subbase during placement and compaction will be controlled (typically within ±3% of the optimum moisture content determined by ASTM D1557). Field density tests using ASTMD 6938, ASTMD 2167 and/or ASTMD 1556 will be performed during placement at specified frequencies to determine if minimum densities are being achieved. RSA-204 CMI Work Plan Chapter 4.0		
In the event that a meaningful moisture-density relationship cannot be developed for granular fill, placement will be controlled using relative density determinations in accordance with ASTM D4253 and D4254. In this case, the moisture content of the fill during placement and compaction will be a minimum relative density (typically of 70 to 85 percent) for granular materials, depending on the material and application. RSA-204 CMI Work Plan Chapter 4.0		
During backfill and site restoration, dust at the site will be controlled as described in Section 4.6 of the CMI work plan. RSA-204 CMI Work Plan Chapter 4.0		

Descriptor / Requirements	Comments	Results
4.11.3 Cap Construction		
It may not be possible to excavate the area immediately adjacent to Building 7689 because of concerns regarding safety and the stability of the building. Consequently, if confirmation sampling results from the excavation sidewalls adjacent to the building indicate contaminants remain in soil at concentrations greater than the CG, then an engineered barrier (e.g., cap) will be constructed within the foundation protection area (inaccessible area for excavation adjacent to Building 7689) to restrict surface water infiltration into the subsurface to help reduce the potential for contaminants to leach from the site (Figure 4-6). The engineered barrier has been designed to meet the requirements of a RCRA Subtitle D site cover in accordance with AAC 335-13-4.20 and 40 Code of Federal Regulations Part 258.60. RSA-204 CMI Work Plan Chapter 4.0		
The cover system near Building 7689 is designed to minimize infiltration and erosion and therefore will consist of an erosion layer underlain by an infiltration layer and a foundation layer. Per AAC 335-13-4.20, the infiltration layer must be comprised of a minimum of 18 inches of earthen material and/or a synthetic layer that has a permeability less than or equal to the permeability of any bottom liner system or natural subsoils present, or a permeability no greater than 1×10^{-5} cm/sec, whichever is less. RSA-204 CMI Work Plan Chapter 4.0		
Prior to installation, existing soil within the foundation protection area will be excavated to between 6 and 12 inches bgs. If needed, additional subgrade material will then be installed from borrow material taken from an approved borrow source that is relatively free of debris, sticks, stones, or other deleterious material. A 3- to 4-inch-thick gravel base layer will be placed above the subgrade. The foundation layer is designed to prevent failure of the cover system due to settlement and provide appropriate grade for drainage control away from the building. To provide positive drainage, the surface slope of the foundation layer of the cover system will be graded to a minimum of 3 percent. The subgrade and base material will be compacted in order to produce a surface that is smooth, firm, and unyielding. RSA-204 CMI Work Plan Chapter 4.0		

Descriptor / Requirements	Comments	Results
The infiltration layer will consist of a polyethylene liner such as Claymax® 200R geosynthetic clay liner, manufactured by CETCO, or an engineer-approved equivalent. This barrier layer will have a permeability of no greater than $5x10^{-9}$ centimeters per second. The liner will be installed in accordance with the manufacturer's technical specifications. Once the foundation layer approval has been completed, the liner will be delivered to the working area in its original packaging. If multiple pieces of the liner are required, deployment of the liner will begin at the lowest point and move up, with subsequent segments shingled on top of the previously laid pieces. Individual segments of the liner will be heat sealed or overlapped such that the overlapping edges allow water to flow from the top panel to the lower. The minimum dimension of the longitudinal overlap shall be 12 inches. RSA-204 CMI Work Plan Chapter 4.0		
Once the infiltration layer (e.g., low-density polyethylene liner) is installed and approved, a concrete erosion control layer will be placed preceded first by a visual demarcation barrier (i.e., brightly colored plastic layer) which will provide a readily visible means to determine if the erosion control layer has been compromised in the future. The concrete will be sloped to drain away from the building as well as to facilitate drainage toward the storm water system along Falcon Road. The concrete will be a minimum of 4 inches in thickness and will have a minimum strength of 3,000 pounds per square inch. Expansion joints, including joints along the edge of the building will be filled with a flexible watertight sealant to prevent water infiltration at the joints. If at any time the infiltration layer is damaged during the concrete placement, it will be immediately repaired. A designated CB&I field representative will monitor installation and ensure that overlapped seams are maintained during construction. The final surface slope will not be less than 3 percent. RSA-204 CMI Work Plan Chapter 4.0		
4.11.4 Site Restoration		
Once the areas have been backfilled and compacted, clean top soil will be placed over the affected area. The disturbed areas will be reseeded and mulched per Appendix G. RSA-204 CMI Work Plan Chapter 4.0		
The earthen blast berms will be reconstructed (Section 4.4 of the CMI Work Plan). RSA-204 CMI Work Plan Chapter 4.0		

Descriptor / Requirements	Comments	Results
The wells that were closed will be replaced (Section 4.3 of the CMI Work Plan). RSA-204 CMI Work Plan Chapter 4.0		
Roads and driveways impacted as a result of excavation activities will be repaired/replaced in accordance with ALDOT and Army requirements for road construction at RSA. RSA-204 CMI Work Plan Chapter 4.0		
A site inspection will be conducted two to four weeks after the seeding to confirm the revegetation is successful. Temporary fencing, sheeting, hay bales, stakes, and other project-related items will be removed from the site and disposed in accordance with SOPP 4.0, *Investigation-Derived Waste* (Shaw, 2010b). RSA-204 CMI Work Plan Chapter 4.0		
4.11.5 Equipment Decontamination		
CB&I will designate an area within the boundary of the work areas at RSA-204 and adjacent to vehicular ingress and egress areas, for equipment decontamination. A decontamination pad typically consists of a soil-bermed area covered with multiple layers of visqueen sheeting where gross contamination can be removed from equipment. The decontamination pad will contain a sump area or low area where wash water from pressure washing will drain to be pumped into a portable holding tank. Decontamination fluids will be sampled for VOCs, SVOCs, perchlorate, and pesticides. Decontamination fluids will be managed as discussed in Section 4.8 of the CMI work plan. Settled soil within the sump will be disposed of with the excavated materials from RSA-204. RSA-204 CMI Work Plan Chapter 4.0		
Non-disposable sampling equipment will be decontaminated prior to beginning work at the site and prior to the collection of individual samples. All sampling equipment and heavy equipment will be decontaminated in accordance with SOPP 3.0, *Field Equipment Decontamination* (Shaw, 2013c). RSA-204 CMI Work Plan Chapter 4.0		

Descriptor / Requirements	Comments	Results
4.11.6 Temporary Storm Water Erosion and Sediment Control Removal		
Upon completion of site restoration activities, temporary erosion and sediment controls will be removed and disposed off site at the RSA C&D landfill. The silt fence will remain in place until after the vegetation is established. RSA-204 CMI Work Plan Chapter 4.0		
Once the silt fence is removed, the posts will be pulled from the ground and the remaining disturbed area will be reseeded in accordance with the best management practices in Appendix G. The removed silt fence will also be disposed off site at the RSA C&D landfill. RSA-204 CMI Work Plan Chapter 4.0		
4.12 Demobilization		
Personnel, equipment, and subcontractors will be demobilized from the project site after completion of remedial activities. A small crew and minimal equipment will be retained as required to remove surplus materials and clean staging areas. RSA-204 CMI Work Plan Chapter 4.0		
Demobilization will primarily consist of disassembly, packing, and return of rented equipment to suppliers and travel for personnel back to their home. RSA-204 CMI Work Plan Chapter 4.0		
4.13 Inspections for Field Activities		
Inspections will be performed using the three-phase inspection method. Inspections may be performed using visual observation, measurement of materials or equipment, examination of documentation and/or certification, evaluation of performance, or testing. RSA-204 CMI Work Plan Chapter 4.0		

CB&I Federal Services LLC	**Contract No:** W91ZLK-05-D-0006 **EPA ID No.** AL7 210 020 742	**Controlling Document:** **Corrective Measures Implementation Work Plan**
Location: Redstone Arsenal, Madison County, Alabama		
Inspection Type: Field Inspection Checklist **Subject:** RSA-204 CMI Work Plan	**Inspection Date:**	

Descriptor / Requirements	Comments	Results
Preparatory Inspections/Meetings will be conducted to discuss training, procedures, documentation, equipment, and materials required for the task. Preparatory Inspections/Meetings will be performed prior to start-up and will examine training, procedures, equipment and materials, work plans and documents, and overall readiness to perform work. Participants in the Preparatory Inspections/Meetings will include, but are not limited to, the task subcontractor, the project Contract Quality Control System Manager (CQCSM), the regulatory representative, and the project health and safety representative. RSA-204 CMI Work Plan Chapter 4.0		
Initial Inspections will be conducted when the task is started. Initial Inspections will include an examination of the quality of workmanship and a review of control testing for compliance with contract and work plan requirements. RSA-204 CMI Work Plan Chapter 4.0		
Follow-Up Inspections will be conducted as the task is ongoing. Follow-Up Inspections will be performed to verify compliance with procedures. They will ensure a continuation of quality and safety standards established during preparatory and initial inspections until completion of each definable work feature. RSA-204 CMI Work Plan Chapter 4.0		
Final Follow-Up Inspections will be performed to ensure that completed features of work meet contract requirements. Any deficiencies noted during this inspection will be documented and a determination made as to the corrective action(s) necessary to mitigate each deficiency. All significant deficiencies must be corrected prior to turnover. RSA-204 CMI Work Plan Chapter 4.0		
At a minimum, inspection files will include inspection reports/checklists, inspection responses, any supporting documents as well as applicable comments. RSA-204 CMI Work Plan Chapter 4.0		

Descriptor / Requirements	Comments	Results
4.14 Land-Use Controls		
LUCs will be implemented in accordance with AAC 335-5 (ADEM, 2009) and ADEM Memorandum #304 (ADEM, 2010a). Details of the LUCs and LUC implementation are presented in the Environmental Use Restriction Plan (Appendix J). The following institutional controls will be implemented at the Building 7689 area of RSA-204: • Implementation of an EUR in accordance with ADEM (ADEM, 2010a) that will restrict residential use in the area of the Building 7689 cap area of RSA-204 • Incorporation of the EUR into the facility Master Plan as required by ADEM (ADEM, 2010a) • Recording of the EUR in the land records for the property, as required by AAC 335-5-.01(2)(j). Inspections of RSA-204 will be conducted on a semi-annual basis and include noting any changes in land use inconsistent with the LUCs. Completed LUCs inspection forms will be included in the CMI Effectiveness Monitoring Reports (i.e., annual reports). RSA-204 CMI Work Plan Chapter 4.0		
4.14.1 Survey Plat		
In accordance with the Permit (ADEM, 2016), where residual contaminant concentrations remain in place at levels greater than those appropriate for unrestricted land use, RSA will submit a survey plat indicating the locations and dimensions of the contaminated areas within RSA-204 and the concentrations of hazardous constituents. The plat shall be submitted to the local authority with jurisdiction over local land use and to ADEM as part of the EUR. This plat must be prepared and certified by a professional land surveyor registered in the state of Alabama, be filed with the local zoning authority or the authority with jurisdiction over local land use, and contain a prominently displayed note stating RSA's obligation to limit the property to the specified restricted uses. The survey plat shall be maintained as described in the Permit until RSA can demonstrate to ADEM that the levels of hazardous constituents in all contaminated media at RSA-204 are within limits appropriate for unrestricted land uses. RSA-204 CMI Work Plan Chapter 4.0		

Descriptor / Requirements	Comments	Results
4.14.2 Environmental Use Restriction		
The proposed EUR is provided in Appendix J for review by ADEM. Once the draft EUR is approved, ADEM will execute and return the original document to RSA to be filed in the appropriate land records (Madison County Judge of Probate Office) within 30 days of receipt and no later than the submission of the survey plat. Certification that the notice of EUR was recorded will be submitted to ADEM. This certification will include a copy of the EUR and the document in which the notation was placed. RSA will maintain the EUR until demonstrating to the satisfaction of ADEM that hazardous constituents in all contaminated media at site RSA-204 are within limits appropriate for unrestricted land uses. If the property is transferred to an owner that is not the federal government, an environmental covenant will be executed and filed at that time in accordance with AAC 335-5 (ADEM, 2009). RSA-204 CMI Work Plan Chapter 4.0		
4.15 Corrective Measures Implementation Reporting		
Upon completion of the approved CMI, three reports will be required: CMI Report, CMI Effectiveness Report, and Final Report of Corrective Measures. RSA-204 CMI Work Plan Chapter 4.0		
4.16 Post-Construction Scheduled Activities		
Post-construction scheduled activities include operation and maintenance of the cap, groundwater monitoring and data evaluation, inspections, and reporting.		
4.16.1 Cap Operation and Maintenance		
The cap will be monitored, maintained, and repaired, as necessary, to ensure its long-term effectiveness. Monitoring will consist of regular inspections of the cap and surrounding vegetation. Repairs will be made as required (Section 4.16.3).		

CB&I Federal Services LLC	**Contract No:** W91ZLK-05-D-0006 **EPA ID No.** AL7 210 020 742	**Controlling Document:** **Corrective Measures Implementation Work Plan**
Location: Redstone Arsenal, Madison County, Alabama		
Inspection Type: Field Inspection Checklist **Subject:** RSA-204 CMI Work Plan	**Inspection Date:**	

Descriptor / Requirements	Comments	Results
4.16.2 Groundwater Monitoring and Data Evaluation		
RSA will continue groundwater monitoring at RSA-204 as detailed in the Long-Term Groundwater Monitoring Plan for this site (Appendix K). Groundwater monitoring will commence after the first round of reagent injections has been conducted. The schedule for the first year will consist of sampling approximately 30 days, 120 days, 210 days, and 300 days after the first injection round. Replacement wells installed following the completion of excavation activities will be added to the next scheduled sampling event following their installation and development. Data will be evaluated and reported as described in Appendix K and Sections 4.16.2.1 and 4.16.2.2 of the CMI work plan.		
4.16.3 Inspections		
RSA will perform inspections on a semiannual basis to ensure continued integrity of the remedy. General site inspections of the localized cap at Building 7689 shall be conducted semiannually to ensure that the integrity of the engineered cover is maintained to ensure that land use remains appropriately restricted per the environmental covenant. The frequency of inspections can be scaled back to once per year, once conditions of the cap have stabilized over a minimum period of two years. The cap and LUC inspection form is included in Appendix K. Completed cap and LUC inspection forms will be included in the CMI effectiveness reports. Prior to modifications in the frequency of inspection the Army will submit a request to ADEM for review and approval.		
4.16.4 Reporting		
RSA will provide CMI effectiveness reports documenting groundwater monitoring results, operation and maintenance of the cap, site inspections, corrective actions, and LUC inspections.		

Results:
- **S = Satisfactory**
- **I = Incomplete at the time of audit or surveillance. To be verified at a later date**
- **O = Observation**
- **F = Finding**
- **NA = Not Applicable**

Comments:_____

QA Manager:_____ **Date:**_____

APPENDIX F

DATA COLLECTION QUALITY ASSURANCE PLAN

Worksheet No. 1 Title Page

Data Collection Quality Assurance Plan for RSA-204, Oxidizer Facility, Building 7691
Operable Unit 10
U.S. Army Garrison-Redstone
Madison County, Alabama
EPA ID No. AL7 210 020 742
September 2016

Prepared for:
Mission & Installation Contracting Command
ATTN: MICC Center – FSH
2107 17th Street
Building 4197, Suite 15
Fort Sam Houston, Texas 78234-5015

Prepared by:
CB&I Federal Services LLC
2410 Cherahala Boulevard
Knoxville, Tennessee 37932

Contract Number W91ZLK-09-D-0006
CB&I Project No. 147104
Task Order 0008

Table of Contents

Page

F1.0 Introduction 1
F1.1 Purpose 1
F1.2 Document Organization 1
F2.0 References 3
F3.0 Uniform Federal Policy Quality Assurance Project Plan Worksheets 4

Attachment F-1 – General Soil Sample Collection, Alabama Department of Environmental Management, SOP #2150, Rev 5.0, Version Date 8/12/16

F1.0 Introduction

This data collection quality assurance plan (DCQAP) has been developed as a standard document in support of corrective measures implementation (CMI) at RSA-204. This document provides procedures, guidelines, and practices for the control of equipment, materials, and services anticipated to be used during the field sampling phases of the soil and groundwater sampling at the site.

F1.1 Purpose

The purpose of this DCQAP is to define the methodology and practices that control the quality of work performed during implementation of the corrective measures at RSA-204. The objective of this DCQAP is to ensure that the data collected are of sufficient quality to verify that corrective measures have been accomplished. This DCQAP is intended for use in conjunction with the Redstone Arsenal installation-wide work plan (IT Corporation, 2002) and the installation-wide (IW) quality assurance program plan (QAPP) for the Program Management Contract (Shaw Environmental, Inc. [Shaw], 2013). The work guidance documents that will govern the quality practices for this task will include the following:

- The CMI work plan and the associated appendices
- The IW QAPP (Shaw, 2013)
- The standard operating project procedures (IW QAPP Volume II) (Shaw, 2013).

Data collection will be in accordance with Alabama Department of Environmental Management (ADEM) guidance (ADEM, 2005; 2010a,b).

F1.2 Document Organization

This document has been organized to present the DCQAP in the following format:

- Introduction – Chapter F1.0
- References – Chapter F2.0
- Uniform Federal Policy (UFP) quality assurance project plan worksheets (Chapter F3.0).

Chapter F1.0 provides a brief overview of this DCQAP and introduces the UFP QAPP worksheets. References are included in Chapter F2.0. The worksheets provided in Chapter F3.0 present a description of the proposed work in compliance with the UFP quality assurance project

plan format. Worksheet No. 2, CMI Work Plan Identifying Information, provides a "cross walk" to the IW QAPP, where needed, and summarizes the site-specific worksheets that are included in this plan.

F2.0 References

Alabama Department of Environmental Management (ADEM), 2010a, Memorandum from James L. Bryant, Environmental Services Branch, ***In-situ Sampling for the Purposes of Waste Characterization/Disposal of Soil***, August.

Alabama Department of Environmental Management (ADEM), 2010b, ***General Soil Sample Collection***, July.

Alabama Department of Environmental Management (ADEM), 2005, ***Alabama Environmental Investigation and Remediation Guidance***, September.

IT Corporation, 2002, ***Draft-Final, Revision 2, Installation-Wide Work Plan, Redstone Arsenal, Madison County, Alabama***, June.

Shaw Environmental, Inc. (Shaw), 2013, ***Revision 2, Installation-Wide Quality Assurance Program Plan for the Program Management Contract, Volume I and Volume II, U.S. Army Garrison-Redstone, Madison County, Alabama***, May.

U.S. Department of Defense (DoD), 2013, ***Quality Systems Manual for Environmental Laboratories***, Version 5.0, July.

U.S. Environmental Protection Agency (EPA), 2010, ***Contract Laboratory Program National Functional Guidelines for Superfund Inorganic Data Review***, EPA/540/R-94/013, January.

U.S. Environmental Protection Agency (EPA), 2008, ***Contract Laboratory Program National Functional Guidelines for Superfund Organic Methods Data Review***, EPA/540/R-08-01, June.

U.S. Environmental Protection Agency (EPA), 1994, ***Region 3 Modifications to the Laboratory Data Validation Functional Guidelines for Evaluating Organic Analyses***, September.

U.S. Environmental Protection Agency (EPA), 1993, ***Region 3 Modifications to the Laboratory Data Validation Functional Guidelines for Evaluating Inorganic Analyses***, April.

F3.0 Uniform Federal Policy Quality Assurance Project Plan Worksheets

The quality assurance requirements needed to support the sampling and data collection activities in this work plan were adopted under the UFP for quality assurance project plans and implemented in a graded approach.

The crosswalk presented in Worksheet No. 2 provides direction to the related documents or information pertaining to the quality assurance project plan requirements. Where site-specific information is required to meet the elements of the UFP QAPP, the supplemental worksheets will be completed in their entirety and included with the crosswalk in this appendix. This DCQAP includes the following supplemental worksheets:

- Worksheet No. 2 – CMI Work Plan Identifying Information
- Worksheet No. 3 – Distribution List
- Worksheet No. 4 – Project Personnel Sign-Off Sheet
- Worksheet No. 14 – Summary of Project Tasks
- Worksheet No. 18 – Sampling Locations and Methods/SOP Requirements
- Worksheet No. 20 – Field Quality Control Sample Summary
- Worksheet No. 26 – Sample Handling System.

The purpose of this DCQAP is to ensure that the data collected are of sufficient quality to achieve the cleanup goals for soil and groundwater at RSA-204. The objective of this work plan is to present the sampling rationale and provide the details required to complete the field efforts. This work plan is intended for use in conjunction with the IW work plan and the IW QAPP for the Program Management Contract.

Worksheet No. 2 CMI Work Plan Identifying Information

Site Name/Project Name	Redstone Arsenal, Madison County, Alabama/RSA Program Management Contract (PMC)
Site Location	Groundwater Unit RSA-146
Site Number/Code	RSA-204
Operable Unit (OU)	OU-10
Contractor Name	CB&I Federal Services LLC (CB&I)
Contractor Number	W91ZLK-09-D-0018
Contract Title	RSA PMC
Work Assignment Number No. (Project No.)	CB&I Project No. 147104
Guidance Documents (Manuals, Guidelines, Plans, etc. Used to Prepare the DCQAP)	Intergovernmental Data Quality Task Force, 2005, *Uniform Federal Policy for Quality Assurance Project Plans* U.S. Department of Defense (DoD), 2013, *Quality Systems Manual* for Environmental Laboratories, Version 5.0 U.S. Environmental Protection Agency (EPA), 2013, *National Functional Guidelines for Superfund Inorganic Data Review*, EPA 540-R-10/011 U.S. Environmental Protection Agency (EPA), 2008, *EPA National Functional Guidelines for Superfund Organic Methods Data Review*, EPA 540-R-08-01
Regulatory Program	Resource Conservation and Recovery Act, ADEM
Approval Entities	U.S. Army Garrison-Redstone, ADEM
Work Plan	☒ Corrective Measures Implementation ☐ Generic Field Sampling Plan
Dates of Scoping Sessions	Biweekly Group 4 Status Calls
Dates and Titles of SFSP Documents Written for Previous Site Work (if applicable)	References are found in Chapter 6.0 of the Corrective Measures Implementation (CMI) Work Plan.
Organizational Partners (stakeholders) and Their Connection with Lead Organization	U.S. Army Garrison-Redstone – Overseeing CB&I's performance under this PMC point of contact with regulators ADEM – State regulator overseeing RSA environmental and remediation activities
Data Users	CB&I Project/Task Leads, engineering, support personnel, U.S. Army Garrison-Redstone, and ADEM

Worksheet No. 2 CMI Work Plan Identifying Information

Required QAPP Element(s) and Corresponding QAPP Section(s)	Required Information	Crosswalk to Related Worksheet / Documents
Project Management and Objectives		
2.1 Title and Approval Page	Title and Approval Page	Worksheet No.1 − Title Page
2.2 Document Format and Table of Contents 2.2.1 Document Control Format 2.2.2 Document Control Numbering System 2.2.3 Table of Contents 2.2.4 QAPP Identifying Information	Table of Contents QAPP Identifying Information	The Table of Contents is provided following the Title and Approval page. Worksheet No.2 – CMI Work Plan Identifying Information
2.3 Distribution List and Project Personnel Sign-Off Sheet 2.3.1 Distribution List 2.3.2 Project Personnel Sign-Off Sheet	Distribution List Project Personnel Sign-Off Sheet	Worksheet No.3 − Distribution List Worksheet No.4 – Project Personnel Sign-Off Sheet
2.4 Project Organization 2.4.1 Project Organization Chart 2.4.2 Communication Pathways 2.4.3 Personnel Responsibilities and Qualifications 2.4.4 Special Training Requirements and Certification	Project Organization Chart Communication Pathways Personnel Responsibilities and Qualifications Table Special Personnel Training Requirements Table	Worksheet No.5 − Project Organizational Chart is provided in the IW QAPP, Volume I (Shaw, 2013). Worksheet No.6 – Worksheet No. 6 is in the IW QAPP (Shaw, 2013) Worksheet No.7 – Personnel Responsibilities and Qualifications Table (Appendix E, Section 2.0) Worksheet No.8 − Special Personnel Training Requirements Table There are no special training requirements for this task.
2.5 Project Planning/Problem Definition 2.5.1 Project Planning (Scoping) 2.5.2 Problem Definition, Site History, and Background	Project Planning Session Documentation (including “Data Needs” tables) Project Scoping Session Participants Sheet Problem Definition, Site History, and Background Site Maps (historical and present)	Worksheet No.9 – Project Scoping Sessions Participants Sheet – Informal scoping sessions were conducted during the biweekly Group 4 status calls. Worksheet No.10 − Problem Definition See Chapters 2.0 and 3.0 of the CMI Work Plan

Worksheet No. 2 CMI Work Plan Identifying Information

Required QAPP Element(s) and Corresponding QAPP Section(s)	Required Information	Crosswalk to Related Worksheet / Documents
2.6 Project Quality Objectives and Measurement Performance Criteria 2.6.1 Development of Project Quality Objectives Using the Systematic Planning Process 2.6.2 Measurement Performance Criteria	Site-Specific Project Quality Objectives Measurement Performance Criteria Table	Worksheet No.11 − Project Quality Objectives/Systematic Planning Process Statements - Sample and data collection for this activity are not of investigative nature but are for confirmation analysis and waste characterization. The planning and objectives have been defined in Chapter 3.0 of the CMI Work Plan. Worksheet No.12 − Measurement Performance Criteria Tables are presented in the IW QAPP, Volume I, Attachment 2a (Shaw, 2013). Site-specific information listing the analyses to be performed is presented in Worksheet No. 18, Sampling Locations and Methods/SOP Requirements, and Worksheet No.20, Field Quality Control Sample Summary.
2.7 Secondary Data Evaluation	Sources of Secondary Data and Information Secondary Data Criteria and Limitations Table	Worksheet No.13 − No secondary data will be generated by this CMI Work Plan, nor will any be generated in the future.
2.8 Project Overview and Schedule 2.8.1 Project Overview 2.8.2 Project Schedule	Summary of Project Tasks Reference Limits and Evaluation Table Project Schedule/Timeline Table	Worksheet No.14 − Summary of Project Tasks Worksheet No.15 − Reference Limits and Evaluation Table is presented in the IW QAPP, Volume I (Shaw, 2013), Attachment 2a. Site-specific information listing the analyses to be performed is presented in Worksheet No.18, Sampling Locations and Methods/SOP Requirements, and Worksheet No. 20, Field Quality Control Sample Summary. Worksheet No.16 − Project Schedule/Timeline Table The construction schedules are found in Appendix C and are based on the regulatory requirements.

Worksheet No. 2 CMI Work Plan Identifying Information

Required QAPP Element(s) and Corresponding QAPP Section(s)	Required Information	Crosswalk to Related Worksheet / Documents
Measurement/Data Acquisition		
3.1 Sampling Tasks 3.1.1 Sampling Process Design and Rationale 3.1.2 Sampling Procedures and Requirements 3.1.2.1 Sampling Collection Procedures 3.1.2.2 Sample Containers, Volume, and Preservation 3.1.2.3 Equipment/Sample Containers Cleaning and Decontamination Procedures 3.1.2.4 Field Equipment Calibration, Maintenance, Testing, and Inspection Procedures 3.1.2.5 Supply Inspection and Acceptance Procedures 3.1.2.6 Field Documentation Procedures	Sampling Design and Rationale Sample Location Map Sampling Locations and Methods / Standard Operating Procedures (SOP) Requirements Table Analytical Methods/SOP Requirements Table Field QC Sample Summary Table Sampling SOPPs Project Sampling SOPP References Table Field Equipment Calibration, Maintenance, Testing, and Inspection Table	Worksheet No.17 − Sampling Design and Rationale for the soil and groundwater confirmation samples are presented in Sections 4.7 and 4.14, respectively, of the CMI Work Plan. Worksheet No.18 − Sampling Locations and Methods/SOP Requirements Worksheet No.19 − Analytical SOP Requirements Table (Sample Containers Preservation and Holding Times) are presented in the IW QAPP, Volume I, Attachment 2a (Shaw, 2013). Site-specific information listing the analyses to be performed is presented in Worksheet No.18, Sampling Locations and Methods/SOP Requirements, and Worksheet No. 20, Field Quality Control Sample Summary. Worksheet No. 20 – Field Quality Control Sample Summary Worksheet No. 21 − Project Sampling SOPP Reference Table. There are no project-specific SOPPs. The complete list of SOPPs is provided in Worksheet No. 21, Project Sampling SOPP References, in the IW QAPP, Volume I (Shaw, 2013). Additionally, copies of the field sampling SOPPs are provided in the IW QAPP, Volume II (Shaw, 2013). Worksheet No. 22 − Field Equipment Calibration Maintenance, Testing, and Inspection Table This Table is presented in Worksheet No. 22 of the IW QAPP, Volume I (Shaw, 2013).

Worksheet No. 2 CMI Work Plan Identifying Information

Required QAPP Element(s) and Corresponding QAPP Section(s)	Required Information	Crosswalk to Related Worksheet / Documents
3.2 Analytical Tasks 3.2.1 Analytical SOPs 3.2.2 Analytical Instrument Calibration Procedures 3.2.3 Analytical Instrument and Equipment Maintenance, Testing, and Inspection Procedures 3.2.4 Analytical Supply Inspection and Acceptance Procedures	Analytical SOPs Analytical SOP References Table Analytical Instrument Calibration Table Analytical Instrument and Equipment Maintenance, Testing, and Inspection Table	Worksheet No. 23 − Analytical Reference Table - Laboratory is provided in the IW QAPP, Volume I, Attachment 2a (Shaw, 2013). Site-specific information listing the analyses to be performed is presented in Worksheet No. 18, Sampling Locations and Methods/SOP Requirements, and Worksheet No. 20, Field Quality Control Sample Summary. Worksheet No. 24 − Analytical Instrument Calibration Table - Laboratory is provided in the IW QAPP, Volume I, Attachment 2a (Shaw, 2013). Site-specific information listing the analyses to be performed is presented in Worksheet No. 18, Sampling Locations and Methods/SOP Requirements, and Worksheet No. 20, Field Quality Control Sample Summary. Worksheet No. 25 − Analytical Instrument and Equipment Maintenance, Testing, and Inspection are provided in the IW QAPP, Volume I, Attachment 2a (Shaw, 2013). Site-specific information listing the analyses to be performed is presented in Worksheet No. 18, Sampling Locations and Methods/SOP Requirements, and Worksheet No. 20, Field Quality Control Sample Summary.
3.3 Sample Collection Documentation, Handling, Tracking, and Custody Procedures 3.3.1 Sample Collection Documentation 3.3.2 Sample Handling and Tracking System 3.3.3 Sample Custody	Sample Collection Documentation Handling, Tracking, and Custody SOPs Sample Container Identification Example Chain-of-Custody (COC) Form and Seal	Worksheet No. 26 − Sample Handling System Worksheet No. 27 − Sample Custody Requirements are provided in the IW QAPP, Volume I (Shaw, 2013). A sample Chain-of-Custody Form is provided in the IW QAPP, Volume I (Shaw, 2013).

Worksheet No. 2 CMI Work Plan Identifying Information

Required QAPP Element(s) and Corresponding QAPP Section(s)	Required Information	Crosswalk to Related Worksheet / Documents
3.4 Quality Control (QC) Samples 3.4.1 Sampling Quality Control Samples 3.4.2 Analytical Quality Control Samples	QC Samples Table Screening/Confirmatory Analysis Decision Tree	Worksheet No. 28 – Laboratory QC Sample Tables are presented in their entirety in the IW QAPP, Volume I Attachment 2a (Shaw, 2013). Site-specific information listing the analyses to be performed is presented in Worksheet No. 18, Sampling Locations and Methods/SOP Requirements, and Worksheet No. 20, Field Quality Control Sample Summary.
3.5 Data Management Tasks 3.5.1 Project Documentation and Records 3.5.2 Data Package Deliverables 3.5.3 Data Reporting Formats 3.5.4 Data Handling and Management 3.5.5 Data Tracking and Control	Project Documents and Records Table Analytical Services Table Data Management SOPs	Worksheet No. 29 − Project Documents and Records Table (SOPP RSA-11.0, "Field-Generated Records Management" provides additional guidance and is included in the IW QAPP, Volume II (Shaw, 2013). Worksheet No. 30 − Analytical Services Table is presented in their entirety in the IW QAPP, Volume I Attachment 2a (Shaw, 2013). Site-specific information listing the analyses to be performed is presented in Worksheet No. 18, Sampling Locations and Methods/SOP Requirements, and Worksheet No. 20, Field Quality Control Sample Summary.
Assessment/Oversight		
4.1 Assessments and Response Actions 4.1.1 Planned Assessments 4.1.2 Assessment Findings and Corrective Action Responses	Assessments and Response Actions Planned Project Assessments Table Audit Checklists Assessment Findings and Corrective Action Responses Table	Worksheet No. 31 − Planned Project Assessments Table, Constructions specific assessment and inspection are provided in Appendix E. Worksheet No. 32 − Assessment Findings and Corrective Action Responses Shaw SOPs for quality assessments and reporting are listed in Worksheet No. 21, and a copy is provided in the IW QAPP, Volume II (Shaw, 2013). The laboratory audit checklists and assessments are provided in the IW QAPP, Volume I (Shaw, 2013).
4.2 QA Management Reports	QA Management Reports Table	Worksheet No. 33 − QA Management Reports Table SOPs for quality assessment and reporting are provided in the IW QAPP, Volume II (Shaw, 2013).

Worksheet No. 2 CMI Work Plan Identifying Information

Required QAPP Element(s) and Corresponding QAPP Section(s)	Required Information	Crosswalk to Related Worksheet / Documents
4.3 Final Project Report	All QA Management Reports attached Additional data quality concerns and resolution documentation	Worksheet No. 33 − QA Management Reports Table SOPs for quality assessment and reporting are provided in the IW QAPP, Volume II (Shaw, 2013).
Data Review		
5.1 Overview		
5.2 Data Review Steps 5.2.1 Step I: Verification 5.2.2 Step II: Validation 5.2.2.1 Step IIa Validation Activities 5.2.2.2 Step IIb Validation Activities 5.2.3 Step III: Usability Assessment 5.2.3.1 Data Limitations and Actions from Usability Assessment 5.2.3.2 Activities	Verification (Step I) Process Table Validation (Steps IIa and IIb) Process Table Validation (Steps IIa and IIb) Summary Table Usability Assessment	Worksheet No. 34 − Verification (Step I) Process Table is presented in the IW QAPP, Volume I (Shaw, 2013). Worksheet No. 35 − Validation (Steps IIa and IIb) Process Table is presented in the IW QAPP, Volume I (Shaw, 2013). Worksheet No. 36 − Validation (Steps IIa and IIb) Summary Table is presented in the IW QAPP, Volume I, Attachment 2a (Shaw, 2013). Worksheet No. 37 − Usability Assessment is presented in the IW QAPP, Volume I (Shaw, 2013).
5.3 Streamlining Data Review 5.3.1 Data Review Steps To Be Streamlined 5.3.2 Criteria for Streamlining Data Review 5.3.3 Amounts and Types of Data Appropriate for Streamlining	Automated Data Review A1 and A2 data files for each sample delivery group Verification sampling or as needed Applicable to 90 percent data that are not manually validated	Automated Data Review (Laboratory Data Consultants) is used by the laboratory and Shaw to automatically review electronic data against the QAPP requirements. In addition, Empirical Laboratories uses the Element Data System (Promium, LLC), which is set up with all project requirements and allows real-time data evaluation for compliance with calibration, spike, surrogate, and blank requirements.

Shaw Environmental, Inc. (Shaw), 2013, ***Revision 2, Installation-Wide Quality Assurance Program Plan for the Program Management Contract, Volume I and Volume II, U.S. Army Garrison-Redstone, Madison County, Alabama***, May.

Worksheet No. 3 Distribution List

SFSP Recipients	Title	Organization	Telephone Number	Fax Number	E-mail Address
Derek Pommerenck	Contracting Officer Representative (COR)	U.S. Army Garrison - Redstone	256-842-5987	256-876-0887	Derek.a.pommerenck.civ@mail.mil
Terry de la Paz	Chief Installation Restoration Branch	U.S. Army Garrison - Redstone	256-955-6968	256-876-0887	Terry.m.delapaz.civ.@mail.mil
Barry Hodges	Army Site Task Manager	U.S. Army Garrison - Redstone	256-876-6492	256-876-0887	Barry.a.hodges.civ@mail.mil
Kel Morrissette	ADEM Lead Remedial Project Manager	ADEM	334-394-4335	334-279-3050	KMorrissette@adem.state.al.us
Art Holcomb	CB&I Task Order 0008 PM	CB&I	256-213-2188	256-213-2190	Art.holcomb@cbifederalservices.com
Emily Davis	CB&I Senior Scientist	CB&I	717-737-1049	717-763-0553	Emily.davis@cbifederalservices.com
David W. Marcum	CB&I Project QA/QC Manager	CB&I	256-213-2193	256-213-2190	Dave.marcum@cbifederalservices.com
Carleton Edmunds	CB&I Regulatory Specialist	CB&I	865-560-7812	865-560-7956	Carleton.edmunds@cbifederalservices.com
Brian Rhodes	CB&I Quality Control Site Manager (QCSM)	CB&I	256-213-2202	256-213-2190	Brian.rhodes@cbifederalservices.com
Mark Shoemaker	CB&I Group 4 Cost Account Manager	CB&I	865-560-7927	865-560-7956	Mark.shoemaker@cbifederalservices.com
Gail Cooley	CB&I Group 4 Technical Lead	CB&I	865-560-7803	865-560-7956	Gail.cooley@cbifederalservices.com
Vicki Graves	CB&I Project Chemist	CB&I	865-560-7818	865-560-7956	Vicki.graves@cbifederalservices.com
Scott Wilson	CB&I Project Engineer	CB&I	256-213-2022	256-213-2190	Scott.wilson@cbifederalservices.com

Notes:
Copies of this data collection quality assurance plan will be distributed to the individuals above as part of the corrective measures implementation plan.

One controlled hard copy of the installation-wide work plan will be maintained in the field office as a reference for field workers. The field team members are required to be familiar with their applicable contents through required reading and the sign-off acknowledgement sheet. The CB&I quality control site manager will be the owner of the field copy of the installation-wide work plan and will be responsible to ensure that it is current and that all field sampling personnel have read the work controlling documents and have signed the acknowledgement form. A copy of the installation-wide guidance document will be maintained as a reference document in the possession of the field sampling team during the sampling event.

Worksheet No. 4 Project Personnel Sign-Off Sheet

Project Personnel	Title	Telephone Number	Signature	Date SFSP Read
Art Holcomb	CB&I Task Order 0008 PM	256-213-2188		
Vicki Graves	CB&I Project Chemist	865-560-7818		
Emily Davis	CB&I Sr. Scientist	717-737-1049		
David W. Marcum	CB&I Project QA/QC Manager	256-213-2193		
Brian Rhodes	CB&I QCSM	256-213-2202		
Mark Shoemaker	CB&I Group 4 Cost Account Manager	865-560-7927		
Gail Cooley	CB&I Group 4 Technical Lead	865-560-7803		
Scott Wilson	Project Engineer	256-213-2022		
Field Personnel	CB&I Field Personnel	256-213-2200		

The individuals who sign above are certifying they have read the applicable sections of the RSA installation-wide quality assurance program plan and the data collection quality assurance plan. Upon completion, please forward the original signed form, with all columns completed, to CB&I Federal Services LLC, c/o David W. Marcum, 7471 Maple Road, Huntsville, AL 35898 or forward an electronic version via email to dave.marcum@cbifederalservices.com for the project files.

Worksheet No. 14 Summary of Project Tasks

The data collection activities conducted at RSA-204 will be completed in accordance with the standard operating project procedures (SOPP), the corrective measures implementation (CMI) work plan, and the installation-wide (IW) quality assurance program plan (QAPP) for the Program Management Contract (Shaw Environmental, Inc. [Shaw], 2013). Data collection for this CMI will be conducted for the following activities:

- Baseline groundwater sampling
- Soil confirmation sampling following the soil excavation
- Borrow source samples as needed
- Investigation-derived waste (IDW)/remediation-derived waste (RDW) characterization
- Long-term groundwater sampling (Appendix K)

Quality assurance (QA)/quality control (QC) samples will be collected as presented in Worksheet No. 20, *Field Quality Control Sample Summary.*

The following sections present a brief description of each data collection task and present the work controlling documents that provide guidance to proper data collection implementation. All data collection activities will be conducted in a manner that ensures the quality of the data is sufficient to meet the objectives identified in the CMI work plan.

14.1 Baseline Groundwater Sampling

Baseline groundwater sampling is proposed from 26 monitoring wells at RSA-204 to define the pretreatment water quality conditions across the treatment areas. This task will be completed prior to soil excavation and groundwater treatment activities. All groundwater sample designations and analytical parameters are listed in Worksheets No. 18 and No. 20. Prior to collection of groundwater samples from the designated wells, combustible gases will be monitored and static water levels will be measured at each well in accordance with SOPP No. 16, *Groundwater Level Measurements* (Shaw, 2013). Groundwater sampling will be performed using a submersible pump for purging and low-flow sampling techniques in accordance with SOPP No. 7, *Groundwater Sampling* (Shaw, 2013).

14.2 Soil Confirmation Samples

Following completion of the soil excavations, confirmation soil samples will be collected around the perimeter sidewalls within the RSA-204 excavation areas to ensure that the soil contaminant concentrations remaining at the site do not exceed the specified cleanup goal (CG) for perchlorate. The sampling activities will include subsurface soil sampling along the perimeter sidewalls (Section 4.7 of the CMI work plan). No floor samples will be collected, as the base of the excavations will be coincident with the average site depth to groundwater and the groundwater is contaminated beneath the site. The confirmation samples will be collected at depths and for analytical samples specified in Worksheet No. 18. The subsurface soil sampling will be conducted

Worksheet No. 14 Summary of Project Tasks

in accordance with SOPP No. 6.0, *Subsurface Soil Sampling,* and collection of confirmation soil samples using the excavator bucket will follow Alabama Department of Environmental Management, SOP # 2150, General Soil Sample Collection (Attachment F-1), Rev 5.0, August 12, 2016. The subsurface soil samples will be field screened using an organic vapor analyzer (OVA) or photoionization detector (PID) for health and safety purposes in accordance with SOPP No. 2.0, *Collection and Field Screening of Soil Samples*. The data collection and analytical requirements are presented in Section 4.7 of the CMI work plan and Worksheets No. 18 and No. 20 of this data collection quality assurance plan (DCQAP), respectively.

Contaminated soils that are stockpiled during the excavation at RSA-204 will be divided into individual 200-cubic yard volumes and sampled in accordance with Section 4.9 of the CMI work plan. Worksheets No. 18 and No. 20 in this DCQAP specify the required sampling and analytical suite.

14.3 Borrow Source Samples

Clean soil for the fill material will be laboratory tested prior to placement. If sampling of the on-site borrow source material has not been conducted, sampling will be conducted to confirm that it is acceptable for use at the site. Samples will be tested for chemical contamination using the following EPA methods:

- EPA Method 3050B/6010C/7471A for metals
- EPA Method SW-846 7471B for mercury
- EPA Method 3540C/8270D for semivolatile organic compounds
- EPA Method 8260B for volatile organic compounds
- EPA Method 8081B for pesticides
- EPA Method 3540C/8082A for polychlorinated biphenyls.

Borrow samples will be collected in accordance with SOPP No. 5.0, *Surface Soil Sampling* (Shaw, 2013) and as detailed in the CMI work plan. The sample collection and analytical requirements are presented in Section 4.11.2 of the CMI work plan and Worksheets No. 18 and No. 20 of this DCQAP, respectively.

14.4 IDW/RDW Samples

Waste to be managed as RDW will include the contaminated soil stockpiled from the excavation at each site. Soil confirmation sampling and groundwater baseline sampling will generate IDW. The data collection for the IDW/RDW management and analytical requirements are presented in Section 4.8 of the CMI work plan and Worksheets No. 18 and No. 20 of this DCQAP, respectively.

Worksheet No. 14 Summary of Project Tasks

14.5 Excavation Areas

A contingency is planned in the event that groundwater infiltration or storm water inhibits excavation activities at the RSA-204 site, in which case the water will be removed from the excavation areas by pumping. Storm water controls will be implemented to direct potential run-off away from the site prior to reaching the limits of construction. The water will be passed through silt fence barricades or equivalent. Any water that needs to be removed from the excavation will be pumped into a tank prior to transport and disposal as a remediation-derived waste.

14.6 Well Closure

Four monitoring wells (204-RS2669, 204-RS2684, 204-RS2671, and K142-RS1224) are planned for closure following the baseline groundwater sampling but prior to the conduct of the groundwater treatment and excavations. Well closure will be completed following SOPP No. 21 in the IW QAPP (Shaw, 2013). Any wastes generated during well closure will be managed as IDW in accordance with the work plan and Section 14.4 of this worksheet.

14.7 Monitoring Well Installation and Development

Wells within the footprint of the excavation or injection areas that were closed will be replaced following the construction activities. Additionally, one new well (204-RS2824) will be installed in a downgradient location prior to the baseline groundwater sampling. These replacement wells (204-RS2791 through 204-RS2794) and the new downgradient well (204-RS2824) will be installed and developed in accordance with SOPP Nos. 17.0, 20.0, and 22.0 in the IW QAPP (Shaw, 2013). The replacement wells installed and developed following the completion of excavation activities will be added to the next scheduled sampling event (Appendix K).

14.8 Equipment Decontamination

Sampling equipment decontamination will be performed to maintain the integrity of the samples collected (i.e., to ensure that contaminants will not be introduced into samples from location to location). All equipment arriving on site will undergo a through decontamination prior to leaving the site. All equipment will be decontaminated in accordance with the requirements specified in SOPP No. 3.0, *Field Equipment Decontamination* (Shaw, 2013). All soils and water will be containerized in accordance with SOPP No. 4.0, *Investigative Derived Waste* (Shaw, 2013), and sampled as IDW/RDW (Section 4.8 of the CMI work plan and Worksheets No. 18 and No. 20 of the DCQAP).

14.9 Field Documentation

Field personnel are responsible for accurately documenting field activities and maintaining the records in a protective manner, safeguarding against damage or loss until submitted to the site supervisor or the project files. All field records are to be accurate, complete, and legible and shall contain

Worksheet No. 14 Summary of Project Tasks

sufficient detail to allow future reconstruction of the recorded event by someone other than the originator. Records may be completed electronically or manually.

Personnel completing records/forms shall observe the following minimum requirements:

- Keep all record entries concise and legible: make all entries in dark blue or black, indelible ink.
- Complete all forms in such a manner as to accurately and thoroughly document the activity.
- Use the military clock (24-hour) when recording time.
- When using a preprinted form, complete each blank or space. Mark “NA” or equivalent in each space that is not applicable to activity.
- Make any corrections or deletions required by drawing a single line throughout the entry and initialing and dating the correction.
- Do not use correction fluid/tape or erasers.

Worksheet No. 29, *Project Documents and Records Table*, in the IW QAPP (Shaw, 2013) provides details on records generation, maintenance, and archival and retrieval methods.

14.10 Quality Assurance/Quality Control Sample Collection

As summarized in Worksheet No. 20, *Field Quality Control Sample Summary,* QC samples collected as part of data collection activities will include equipment rinsate samples, field duplicates, and matrix spike (MS)/matrix spike duplicate (MSD) samples to monitor decontamination procedures, sample handling procedures, laboratory precision, accuracy, and sample matrix effects. Laboratory standard operating procedures (SOP) are available in Worksheet No. 19, *Analytical SOP Requirements* (Shaw, 2013).

14.10.1 Equipment Rinsate Samples

Equipment rinsate samples are blank samples collected to determine if the decontamination process has removed residual contamination from sampling equipment. The rinsate sample will consist of ASTM International Type II reagent-grade water poured over or through decontaminated sampling equipment into the appropriate sample containers. The rinsate will be analyzed for the same analytical parameters as the environmental samples. The data obtained from the rinsate samples will be used in the data validation process. Equipment rinsate samples will be collected as needed in accordance with IW QAPP (Shaw, 2013).

Worksheet No. 14 Summary of Project Tasks

14.10.2 Field Duplicates

Field duplicates will be collected to assess the precision of the analytical process utilized in the analysis of the samples collected. The field duplicates will consist of a second sample collected at the same location as the original sample. The duplicate samples will be collected at predetermined locations and will be collected, handled, and transported in the same manner as the original samples. One field duplicate will be collected for every 10 regular environmental samples collected. All sampled media will include at least one field duplicate (Shaw, 2013). Field duplicates samples will not be collected for waste characterization samples since data validation is not required for waste characterization samples.

14.10.3 Matrix Spike/Matrix Spike Duplicates

MS/MSD samples will be collected to assess the laboratory precision, accuracy, and sample matrix effects. The MS/MSD samples will consist of a second and third sample collected at the same location as the original sample. The samples will be collected at predetermined locations and collected, handled, and transported in the same manner as the original samples. One MS/MSD will be collected for every 20 regular environmental samples collected. All sampled media will include at least one MS/MSD (Shaw, 2013). MS/MSD samples will not be collected for waste characterization samples since data validation is not required for waste characterization samples.

14.11 Sample Handling Procedures and Holding Times

All sample containers, handling, packaging, and shipping will be in accordance with SOPP No. 15.0, *Non-Hazardous Sample Handling, Packaging and Shipping,* in the IW QAPP (Shaw, 2013). Worksheet No. 20, *Field Quality Control Sample Summary,* provides the sample volume, sample container types, and sample frequency.

14.12 Sample Documentation Custody, Packaging, and Shipping

The field sampling team will maintain physical custody of the samples at all times prior to shipment to the analytical laboratory. Sample documentation custody, packaging, and shipping will be in accordance with SOPP No. 15.0, *Non-Hazardous Sample Handling, and Packaging and Shipping*, in the IW QAPP (Shaw, 2013). Worksheet No. 26.0, *Sampling Handling System,* identifies the personnel and the organizations that are responsible for sample custody, packaging, and shipment.

14.13 Data Management and Validation

All analytical data generated from this project are managed in accordance with the procedures specified in the IW QAPP (Shaw, 2013). Samples collected during implementation of the sampling effort are analyzed using approved EPA SW-846 Update III Methods in accordance with the procedures in the

Worksheet No. 14 Summary of Project Tasks

U.S. Department of Defense Quality Systems Manual (U.S. Department of Defense, 2013) and laboratory SOPs as presented in Worksheet No. 19 (Shaw, 2013). Confirmation soil samples and baseline groundwater samples will also be validated. Reporting limits for the various analytes will be appropriate for comparing data against the decision criteria.

Sample data is validated by the CB&I validation team using the EPA Contract Laboratory Program National Functional Guidelines for organic and inorganic data review (EPA, 2008; 2010). The EPA Region 3 modifications to the National Functional Guidelines for organic and inorganic analyses (EPA, 1993; 1994) will be applied to blank contamination. Specific QC criteria identified in the IW QAPP (Shaw, 2013), analytical methods, and laboratory SOPs will be applied to all sample results. For those analytical methods not addressed by the validation guidelines, the evaluation is based on the published method requirements, laboratory-specific SOPs, and technical judgment following the logic of the Contract Laboratory Program validation guidelines for data qualification.

SFSP Worksheet No. 18 Sampling Locations and Methods/SOP Requirements

Sample Location	Sample Designation	Sample Depth (ft bgs)	QA/QC Sample Designation		Analytical Suite
			FD*	MS/MSD*	
RSA-204 Southeastern Area (Excavation Area 1) Soil Sample Confirmation Locations					
204-EXC1-CONF-1	204-EXC1-CONF-1 -DS- AAR0279 -REG	0-3			Perchlorate
	204-EXC1-CONF-1 -DS- AAR0280 -REG	3-7	204-EXC1-CONF-1-DS AAR0281-FD		
	204-EXC1-CONF-1 -DS- AAR0282 -REG	7-11			
	204-EXC1-CONF-1 -DS- AAR0283 -REG	11-15			
204-EXC1-CONF-2	204-EXC1-CONF-2 -DS- AAR0284 -REG	0-3		204-EXC1-CONF-2-DS AAR0284-MS/MSD	Perchlorate
	204-EXC1-CONF-2 -DS- AAR0285 -REG	3-7			
	204-EXC1-CONF-2 -DS- AAR0286 -REG	7-11			
	204-EXC1-CONF-2 -DS- AAR0287 -REG	11-15			
204-EXC1-CONF-3	204-EXC1-CONF-3 -DS- AAR0288 -REG	0-3	204-EXC1-CONF-3-DS AAR0289-FD		Perchlorate
	204-EXC1-CONF-3 -DS- AAR0290 -REG	3-7			
	204-EXC1-CONF-3 -DS- AAR0291 -REG	7-11			
	204-EXC1-CONF-3 -DS- AAR0292 -REG	11-15			
204-EXC1-CONF-4	204-EXC1-CONF-4 -DS- AAR0293 -REG	0-3			Perchlorate
	204-EXC1-CONF-4 -DS- AAR0294 -REG	3-7			
	204-EXC1-CONF-4 -DS- AAR0295 -REG	7-11			
	204-EXC1-CONF-4 -DS- AAR0296 -REG	11-15			
204-EXC1-CONF-5	204-EXC1-CONF-5 -DS- AAR0297 -REG	0-3			Perchlorate
	204-EXC1-CONF-5 -DS- AAR0298 -REG	3-7		204-EXC1-CONF-5-DS AAR0298-MS/MSD	
	204-EXC1-CONF-5 -DS- AAR0299 -REG	7-11			
	204-EXC1-CONF-5 -DS- AAR0300 -REG	11-15			
204-EXC1-CONF-6	204-EXC1-CONF-6 -DS- AAR0301 -REG	0-3			Perchlorate
	204-EXC1-CONF-6 -DS- AAR0302 -REG	3-7	204-EXC1-CONF-6-DS AAR0303-FD		
	204-EXC1-CONF-6 -DS- AAR0304 -REG	7-11			
	204-EXC1-CONF-6 -DS- AAR0305 -REG	11-15			
204-EXC1-CONF-7	204-EXC1-CONF-7 -DS- AAR0306 -REG	0-3			Perchlorate
	204-EXC1-CONF-7 -DS- AAR0307 -REG	3-7			
	204-EXC1-CONF-7 -DS- AAR0308 -REG	7-11			
	204-EXC1-CONF-7 -DS- AAR0309 -REG	11-15			

SFSP Worksheet No. 18 Sampling Locations and Methods/SOP Requirements

Sample Location	Sample Designation	Sample Depth (ft bgs)	QA/QC Sample Designation		Analytical Suite
			FD*	MS/MSD*	
204-EXC1-CONF-8	204-EXC1-CONF-8 -DS- AAR0310 -REG	0-3			Perchlorate
	204-EXC1-CONF-8 -DS- AAR0311 -REG	3-7			
	204-EXC1-CONF-8 -DS- AAR0312 -REG	7-11	204-EXC1-CONF-8-DS AAR0313-FD		
	204-EXC1-CONF-8 -DS- AAR0314 -REG	11-15			
204-EXC1-CONF-9	204-EXC1-CONF-9 -DS- AAR0315 -REG	0-3			Perchlorate
	204-EXC1-CONF-9 -DS- AAR0316 -REG	3-7			
	204-EXC1-CONF-9 -DS- AAR0317 -REG	7-11		204-EXC1-CONF-9-DS AAR0317-MS/MSD	
	204-EXC1-CONF-9 -DS- AAR0318 -REG	11-15			
204-EXC1-CONF-10	204-EXC1-CONF-10 -DS- AAR0319 -REG	0-3			Perchlorate
	204-EXC1-CONF-10 -DS- AAR0320 -REG	3-7			
	204-EXC1-CONF-10 -DS- AAR0321 -REG	7-11			
	204-EXC1-CONF-10 -DS- AAR0322 -REG	11-15			
204-EXC1-CONF-11	204-EXC1-CONF-11 -DS- AAR0323 -REG	0-3	204-EXC1-CONF-11-DS AAR0324-FD		Perchlorate
	204-EXC1-CONF-11 -DS- AAR0325 -REG	3-7			
	204-EXC1-CONF-11 -DS- AAR0326 -REG	7-11			
	204-EXC1-CONF-11 -DS- AAR0327 -REG	11-15			
RSA-204 Central Area (Excavation Area 2) Soil Sample Confirmation Locations					
204-EXC2-CONF-1	204-EXC2-CONF-1 -DS- AAR0328 -REG	0-5			Perchlorate
	204-EXC2-CONF-1 -DS- AAR0329 -REG	5-9			
	204-EXC2-CONF-1 -DS- AAR0330 -REG	9-13	204-EXC2-CONF-1-DS AAR0331-FD		
	204-EXC2-CONF-1 -DS- AAR0332 -REG	13-17			
204-EXC2-CONF-2	204-EXC2-CONF-2 -DS- AAR0333 -REG	0-5			Perchlorate
	204-EXC2-CONF-2 -DS- AAR0334 -REG	5-9		204-EXC2-CONF-2-DS AAR0334-MS/MSD	
	204-EXC2-CONF-2 -DS- AAR0335 -REG	9-13			
	204-EXC2-CONF-2 -DS- AAR0336 -REG	13-17			
204-EXC2-CONF-3	204-EXC2-CONF-3 -DS- AAR0337 -REG	0-5			Perchlorate
	204-EXC2-CONF-3 -DS- AAR0338 -REG	5-9			
	204-EXC2-CONF-3 -DS- AAR0339 -REG	9-13	204-EXC2-CONF-3-DS AAR0340-FD		
	204-EXC2-CONF-3 -DS- AAR0341 -REG	13-17			

SFSP Worksheet No. 18 Sampling Locations and Methods/SOP Requirements

Sample Location	Sample Designation	Sample Depth (ft bgs)	QA/QC Sample Designation		Analytical Suite
			FD*	MS/MSD*	
204-EXC2-CONF-4	204-EXC2-CONF-4 -DS- AAR0342 -REG	0-5			Perchlorate
	204-EXC2-CONF-4 -DS- AAR0343 -REG	5-9			
	204-EXC2-CONF-4 -DS- AAR0344 -REG	9-13			
	204-EXC2-CONF-4 -DS- AAR0345 -REG	13-17			
204-EXC2-CONF-5	204-EXC2-CONF-5 -DS- AAR0346 -REG	0-5			Perchlorate
	204-EXC2-CONF-5 -DS- AAR0347 -REG	5-9			
	204-EXC2-CONF-5 -DS- AAR0348 -REG	9-13			
	204-EXC2-CONF-5 -DS- AAR0349 -REG	13-17			
204-EXC2-CONF-6	204-EXC2-CONF-6 -DS- AAR0350 -REG	0-5	204-EXC2-CONF-6-DS AAR0351-FD		Perchlorate
	204-EXC2-CONF-6 -DS- AAR0352 -REG	5-9			
	204-EXC2-CONF-6 -DS- AAR0353 -REG	9-13			
	204-EXC2-CONF-6 -DS- AAR0354 -REG	13-17			
204-EXC2-CONF-7	204-EXC2-CONF-7 -DS- AAR0355 -REG	0-5			Perchlorate
	204-EXC2-CONF-7 -DS- AAR0356 -REG	5-9			
	204-EXC2-CONF-7 -DS- AAR0357 -REG	9-13			
	204-EXC2-CONF-7 -DS- AAR0358 -REG	13-17			
204-EXC2-CONF-8	204-EXC2-CONF-8 -DS- AAR0359 -REG	0-5			Perchlorate
	204-EXC2-CONF-8 -DS- AAR0360 -REG	5-9	204-EXC2-CONF-8-DS AAR0361-FD		
	204-EXC2-CONF-8 -DS- AAR0362 -REG	9-13			
	204-EXC2-CONF-8 -DS- AAR0363 -REG	13-17			
204-EXC2-CONF-9	204-EXC2-CONF-9 -DS- AAR0364 -REG	0-5			Perchlorate
	204-EXC2-CONF-9 -DS- AAR0365 -REG	5-9			
	204-EXC2-CONF-9 -DS- AAR0366 -REG	9-13			
	204-EXC2-CONF-9 -DS- AAR0367 -REG	13-17			
204-EXC2-CONF-10	204-EXC2-CONF-10 -DS- AAR0368 -REG	0-5			Perchlorate
	204-EXC2-CONF-10 -DS- AAR0369 -REG	5-9		204-EXC2-CONF-10-DS AAR0369-MS/MSD	
	204-EXC2-CONF-10 -DS- AAR0370 -REG	9-13			
	204-EXC2-CONF-10 -DS- AAR0371 -REG	13-17			

SFSP Worksheet No. 18 Sampling Locations and Methods/SOP Requirements

Sample Location	Sample Designation	Sample Depth (ft bgs)	QA/QC Sample Designation		Analytical Suite
			FD*	MS/MSD*	
204-EXC2-CONF-11	204-EXC2-CONF-11 -DS- AAR0372 -REG	0-5			Perchlorate
	204-EXC2-CONF-11 -DS- AAR0373 -REG	5-9			
	204-EXC2-CONF-11 -DS- AAR0374 -REG	9-13			
	204-EXC2-CONF-11 -DS- AAR0375 -REG	13-17			
204-EXC2-CONF-12	204-EXC2-CONF-12 -DS- AAR0376 -REG	0-5			Perchlorate
	204-EXC2-CONF-12 -DS- AAR0377 -REG	5-9			
	204-EXC2-CONF-12 -DS- AAR0378 -REG	9-13	204-EXC2-CONF-12-DS AAR0379-FD		
	204-EXC2-CONF-12 -DS- AAR0380 -REG	13-17			
204-EXC2-CONF-13	204-EXC2-CONF-13 -DS- AAR0381 -REG	0-5			Perchlorate
	204-EXC2-CONF-13 -DS- AAR0382 -REG	5-9			
	204-EXC2-CONF-13 -DS- AAR0383 -REG	9-13			
	204-EXC2-CONF-13 -DS- AAR0384 -REG	13-17			
204-EXC2-CONF-14	204-EXC2-CONF-14 -DS- AAR0385 -REG	0-5			Perchlorate
	204-EXC2-CONF-14 -DS- AAR0386 -REG	5-9			
	204-EXC2-CONF-14 -DS- AAR0387 -REG	9-13			
	204-EXC2-CONF-14 -DS- AAR0388 -REG	13-17			
204-EXC2-CONF-15	204-EXC2-CONF-15 -DS- AAR0389 -REG	0-5			Perchlorate
	204-EXC2-CONF-15 -DS- AAR0390 -REG	5-9	204-EXC2-CONF-15-DS AAR0391-FD		
	204-EXC2-CONF-15 -DS- AAR0392 -REG	9-13			
	204-EXC2-CONF-15 -DS- AAR0393 -REG	13-17			
204-EXC2-CONF-16	204-EXC2-CONF-16 -DS- AAR0394 -REG	0-5		204-EXC2-CONF-16-DS AAR0394-MS/MSD	Perchlorate
	204-EXC2-CONF-16 -DS- AAR0395 -REG	5-9			
	204-EXC2-CONF-16 -DS- AAR0396 -REG	9-13			
	204-EXC2-CONF-16 -DS- AAR0397 -REG	13-17			
204-EXC2-CONF-17	204-EXC2-CONF-17 -DS- AAR0398 -REG	0-5			Perchlorate
	204-EXC2-CONF-17 -DS- AAR0399 -REG	5-9			
	204-EXC2-CONF-17 -DS- AAR0400 -REG	9-13			
	204-EXC2-CONF-17 -DS- AAR0401 -REG	13-17			

SFSP Worksheet No. 18 Sampling Locations and Methods/SOP Requirements

Sample Location	Sample Designation	Sample Depth (ft bgs)	QA/QC Sample Designation		Analytical Suite
			FD*	MS/MSD*	
204-EXC2-CONF-18	204-EXC2-CONF-18 -DS- AAR0402 -REG	0-5	204-EXC2-CONF-18-DS AAR0403-FD		Perchlorate
	204-EXC2-CONF-18 -DS- AAR0404 -REG	5-9			
	204-EXC2-CONF-18 -DS- AAR0405 -REG	9-13			
	204-EXC2-CONF-18 -DS- AAR0406 -REG	13-17			
204-EXC2-CONF-19	204-EXC2-CONF-19 -DS- AAR0407 -REG	0-5			Perchlorate
	204-EXC2-CONF-19 -DS- AAR0408 -REG	5-9			
	204-EXC2-CONF-19 -DS- AAR0409 -REG	9-13			
	204-EXC2-CONF-19 -DS- AAR0410 -REG	13-17			
204-EXC2-CONF-20	204-EXC2-CONF-20 -DS- AAR0411 -REG	0-5			Perchlorate
	204-EXC2-CONF-20 -DS- AAR0412 -REG	5-9			
	204-EXC2-CONF-20 -DS- AAR0413 -REG	9-13	204-EXC2-CONF-20-DS AAR0414-FD		
	204-EXC2-CONF-20 -DS- AAR0415 -REG	13-17			
204-EXC2-CONF-21	204-EXC2-CONF-21 -DS- AAR0416 -REG	0-5			Perchlorate
	204-EXC2-CONF-21 -DS- AAR0417 -REG	5-9		204-EXC2-CONF-21-DS AAR0417-MS/MSD	
	204-EXC2-CONF-21 -DS- AAR0418 -REG	9-13			
	204-EXC2-CONF-21 -DS- AAR0419 -REG	13-17			
204-EXC2-CONF-22	204-EXC2-CONF-22 -DS- AAR0420 -REG	0-5			Perchlorate
	204-EXC2-CONF-22 -DS- AAR0421 -REG	5-9			
	204-EXC2-CONF-22 -DS- AAR0422 -REG	9-13		204-EXC2-CONF-22-DS AAR0422-MS/MSD	
	204-EXC2-CONF-22 -DS- AAR0423 -REG	13-17			
204-EXC2-CONF-23	204-EXC2-CONF-23 -DS- AAR0424 -REG	0-5			Perchlorate
	204-EXC2-CONF-23 -DS- AAR0425 -REG	5-9			
	204-EXC2-CONF-23 -DS- AAR0426 -REG	9-13			
	204-EXC2-CONF-23 -DS- AAR0427 -REG	13-17			
204-EXC2-CONF-24	204-EXC2-CONF-24 -DS- AAR0428 -REG	0-5	204-EXC2-CONF-24-DS AAR0429-FD		Perchlorate
	204-EXC2-CONF-24 -DS- AAR0430 -REG	5-9			
	204-EXC2-CONF-24 -DS- AAR0431 -REG	9-13			
	204-EXC2-CONF-24 -DS- AAR0432 -REG	13-17			

SFSP Worksheet No. 18 Sampling Locations and Methods/SOP Requirements

Sample Location	Sample Designation	Sample Depth (ft bgs)	QA/QC Sample Designation		Analytical Suite
			FD*	MS/MSD*	
204-EXC2-CONF-25	204-EXC2-CONF-25 -DS- AAR0433 -REG	0-5			Perchlorate
	204-EXC2-CONF-25 -DS- AAR0434 -REG	5-9	204-EXC2-CONF-25-DS AAR0435-FD		
	204-EXC2-CONF-25 -DS- AAR0436 -REG	9-13			
	204-EXC2-CONF-25 -DS- AAR0437 -REG	13-17			
RSA-204 Soil Stockpile Location (Backfill/Waste)					
204-STCKP01	204-STCKP01 -DS- AAR0438 -REG	TBD			Perchlorate, Explosives, TCLP Metals
204-STCKP02	204-STCKP02 -DS- AAR0439 -REG	TBD	204-STCKP02-DS-AAE0440-FD		Perchlorate, Explosives, TCLP Metals
204-STCKP03	204-STCKP03 -DS- AAR0441 -REG	TBD			Perchlorate, Explosives, TCLP Metals
204-STCKP04	204-STCKP04 -DS- AAR0442 -REG	TBD			Perchlorate, Explosives, TCLP Metals
204-STCKP05	204-STCKP05 -DS- AAR0443 -REG	TBD			Perchlorate, Explosives, TCLP Metals
204-STCKP06	204-STCKP06 -DS- AAR0444 -REG	TBD			Perchlorate, Explosives, TCLP Metals
204-STCKP07	204-STCKP07 -DS- AAR0445 -REG	TBD			Perchlorate, Explosives, TCLP Metals
204-STCKP08	204-STCKP08 -DS- AAR0446 -REG	TBD			Perchlorate, Explosives, TCLP Metals
204-STCKP09	204-STCKP09 -DS- AAR0447 -REG	TBD			Perchlorate, Explosives, TCLP Metals
204-STCKP10	204-STCKP10 -DS- AAR0448 -REG	TBD			Perchlorate, Explosives, TCLP Metals
204-STCKP11	204-STCKP11 -DS- AAR0449 -REG	TBD			Perchlorate, Explosives, TCLP Metals
204-STCKP12	204-STCKP12 -DS- AAR0450 -REG	TBD			Perchlorate, Explosives, TCLP Metals
204-STCKP13	204-STCKP13 -DS- AAR0451 -REG	TBD			Perchlorate, Explosives, TCLP Metals
204-STCKP14	204-STCKP14 -DS- AAR0452 -REG	TBD	204-STCKP14-DS-AAE0453-FD		Perchlorate, Explosives, TCLP Metals
204-STCKP15	204-STCKP15 -DS- AAR0454 -REG	TBD			Perchlorate, Explosives, TCLP Metals
204-STCKP16	204-STCKP16 -DS- AAR0455 -REG	TBD			Perchlorate, Explosives, TCLP Metals
204-STCKP17	204-STCKP17 -DS- AAR0456 -REG	TBD			Perchlorate, Explosives, TCLP Metals
204-STCKP18	204-STCKP18 -DS- AAR0457 -REG	TBD			Perchlorate, Explosives, TCLP Metals
204-STCKP19	204-STCKP19 -DS- AAR0458 -REG	TBD			Perchlorate, Explosives, TCLP Metals
204-STCKP20	204-STCKP20 -DS- AAR0459 -REG	TBD		204-STCKP20-DS-AAE0459-MS/MSD	Perchlorate, Explosives, TCLP Metals
204-STCKP21	204-STCKP21 -DS- AAR0460 -REG	TBD			Perchlorate, Explosives, TCLP Metals
204-STCKP22	204-STCKP22 -DS- AAR0461 -REG	TBD			Perchlorate, Explosives, TCLP Metals
204-STCKP23	204-STCKP23 -DS- AAR0462 -REG	TBD			Perchlorate, Explosives, TCLP Metals
204-STCKP24	204-STCKP24 -DS- AAR0463 -REG	TBD			Perchlorate, Explosives, TCLP Metals
204-STCKP25	204-STCKP25 -DS- AAR0464 -REG	TBD			Perchlorate, Explosives, TCLP Metals
204-STCKP26	204-STCKP26 -DS- AAR0465 -REG	TBD			Perchlorate, Explosives, TCLP Metals
204-STCKP27	204-STCKP27 -DS- AAR0466 -REG	TBD			Perchlorate, Explosives, TCLP Metals
204-STCKP28	204-STCKP28 -DS- AAR0467 -REG	TBD			Perchlorate, Explosives, TCLP Metals
204-STCKP29	204-STCKP29 -DS- AAR0468 -REG	TBD			Perchlorate, Explosives, TCLP Metals
204-STCKP30	204-STCKP30 -DS- AAR0469 -REG	TBD			Perchlorate, Explosives, TCLP Metals
204-STCKP31	204-STCKP31 -DS- AAR0470 -REG	TBD	204-STCKP31-DS-AAE0471-FD		Perchlorate, Explosives, TCLP Metals
204-STCKP32	204-STCKP32 -DS- AAR0472 -REG	TBD			Perchlorate, Explosives, TCLP Metals
204-STCKP33	204-STCKP33 -DS- AAR0473 -REG	TBD			Perchlorate, Explosives, TCLP Metals
204-STCKP34	204-STCKP34 -DS- AAR0474 -REG	TBD		204-STCKP34-DS-AAE0474-MS/MSD	Perchlorate, Explosives, TCLP Metals
204-STCKP35	204-STCKP35 -DS- AAR0475 -REG	TBD			Perchlorate, Explosives, TCLP Metals
204-STCKP36	204-STCKP36 -DS- AAR0476 -REG	TBD			Perchlorate, Explosives, TCLP Metals
204-STCKP37	204-STCKP37 -DS- AAR0477 -REG	TBD			Perchlorate, Explosives, TCLP Metals
204-STCKP38	204-STCKP38 -DS- AAR0478 -REG	TBD			Perchlorate, Explosives, TCLP Metals
204-STCKP39	204-STCKP39 -DS- AAR0479 -REG	TBD			Perchlorate, Explosives, TCLP Metals
204-STCKP40	204-STCKP40 -DS- AAR0480 -REG	TBD	204-STCKP40-DS-AAE0481-FD		Perchlorate, Explosives, TCLP Metals
204-STCKP41	204-STCKP41 -DS- AAR0482 -REG	TBD			Perchlorate, Explosives, TCLP Metals
204-STCKP42	204-STCKP42 -DS- AAR0483 -REG	TBD			Perchlorate, Explosives, TCLP Metals
204-STCKP43	204-STCKP43 -DS- AAR0484 -REG	TBD			Perchlorate, Explosives, TCLP Metals

SFSP Worksheet No. 18 Sampling Locations and Methods/SOP Requirements

Sample Location	Sample Designation	Sample Depth (ft bgs)	QA/QC Sample Designation		Analytical Suite
			FD*	MS/MSD*	
204-STCKP44	204-STCKP44 -DS- AAR0485 -REG	TBD			Perchlorate, Explosives, TCLP Metals
204-STCKP45	204-STCKP45 -DS- AAR0486 -REG	TBD			Perchlorate, Explosives, TCLP Metals
204-STCKP46	204-STCKP46 -DS- AAR0487 -REG	TBD			Perchlorate, Explosives, TCLP Metals
204-STCKP47	204-STCKP47 -DS- AAR0488 -REG	TBD	204-STCKP47-DS-AAE0489-FD		Perchlorate, Explosives, TCLP Metals
204-STCKP48	204-STCKP48 -DS- AAR0490 -REG	TBD			Perchlorate, Explosives, TCLP Metals
204-STCKP49	204-STCKP49 -DS- AAR0491 -REG	TBD			Perchlorate, Explosives, TCLP Metals
204-STCKP50	204-STCKP50 -DS- AAR0492 -REG	TBD		204-STCKP50-DS-AAE0492-MS/MSD	Perchlorate, Explosives, TCLP Metals
204-STCKP51	204-STCKP51 -DS- AAR0493 -REG	TBD			Perchlorate, Explosives, TCLP Metals
204-STCKP52	204-STCKP52 -DS- AAR0494 -REG	TBD			Perchlorate, Explosives, TCLP Metals
204-STCKP53	204-STCKP53 -DS- AAR0495 -REG	TBD			Perchlorate, Explosives, TCLP Metals
204-STCKP54	204-STCKP54 -DS- AAR0496 -REG	TBD			Perchlorate, Explosives, TCLP Metals
204-STCKP55	204-STCKP55 -DS- AAR0497 -REG	TBD	204-STCKP55-DS-AAE0498-FD		Perchlorate, Explosives, TCLP Metals
204-STCKP56	204-STCKP56 -DS- AAR0499 -REG	TBD			Perchlorate, Explosives, TCLP Metals
204-STCKP57	204-STCKP57 -DS- AAR0500 -REG	TBD			Perchlorate, Explosives, TCLP Metals
204-STCKP58	204-STCKP58 -DS- AAR0501 -REG	TBD			Perchlorate, Explosives, TCLP Metals
204-STCKP59	204-STCKP59 -DS- AAR0502 -REG	TBD			Perchlorate, Explosives, TCLP Metals
204-STCKP60	204-STCKP60 -DS- AAR0503 -REG	TBD			Perchlorate, Explosives, TCLP Metals
204-STCKP61	204-STCKP61 -DS- AAR0504 -REG	TBD			Perchlorate, Explosives, TCLP Metals
204-STCKP62	204-STCKP62 -DS- AAR0505 -REG	TBD		204-STCKP62-DS-AAE0505-MS/MSD	Perchlorate, Explosives, TCLP Metals
204-STCKP63	204-STCKP63 -DS- AAR0506 -REG	TBD			Perchlorate, Explosives, TCLP Metals
204-STCKP64	204-STCKP64 -DS- AAR0507 -REG	TBD			Perchlorate, Explosives, TCLP Metals
204-STCKP65	204-STCKP65 -DS- AAR0508 -REG	TBD			Perchlorate, Explosives, TCLP Metals
204-STCKP66	204-STCKP66 -DS- AAR0509 -REG	TBD			Perchlorate, Explosives, TCLP Metals
204-STCKP67	204-STCKP67 -DS- AAR0510 -REG	TBD	204-STCKP67-DS-AAE0511-FD		Perchlorate, Explosives, TCLP Metals
204-STCKP68	204-STCKP68 -DS- AAR0512 -REG	TBD			Perchlorate, Explosives, TCLP Metals
204-STCKP69	204-STCKP69 -DS- AAR0513 -REG	TBD			Perchlorate, Explosives, TCLP Metals
204-STCKP70	204-STCKP70 -DS- AAR0514 -REG	TBD			Perchlorate, Explosives, TCLP Metals
204-STCKP71	204-STCKP71 -DS- AAR0515 -REG	TBD			Perchlorate, Explosives, TCLP Metals
204-STCKP72	204-STCKP72 -DS- AAR0516 -REG	TBD			Perchlorate, Explosives, TCLP Metals
204-STCKP73	204-STCKP73 -DS- AAR0517 -REG	TBD			Perchlorate, Explosives, TCLP Metals
204-STCKP74	204-STCKP74 -DS- AAR0518 -REG	TBD			Perchlorate, Explosives, TCLP Metals
204-STCKP75	204-STCKP75 -DS- AAR0519 -REG	TBD			Perchlorate, Explosives, TCLP Metals
204-STCKP76	204-STCKP76 -DS- AAR0520 -REG	TBD			Perchlorate, Explosives, TCLP Metals
204-STCKP77	204-STCKP77 -DS- AAR0521 -REG	TBD			Perchlorate, Explosives, TCLP Metals
204-STCKP78	204-STCKP78 -DS- AAR0522 -REG	TBD	204-STCKP78-DS-AAE0523-FD		Perchlorate, Explosives, TCLP Metals
204-STCKP79	204-STCKP79 -DS- AAR0524 -REG	TBD			Perchlorate, Explosives, TCLP Metals
204-STCKP80	204-STCKP80 -DS- AAR0525 -REG	TBD			Perchlorate, Explosives, TCLP Metals
204-STCKP81	204-STCKP81 -DS- AAR0526 -REG	TBD			Perchlorate, Explosives, TCLP Metals
204-STCKP82	204-STCKP82 -DS- AAR0527 -REG	TBD			Perchlorate, Explosives, TCLP Metals
204-STCKP83	204-STCKP83 -DS- AAR0528 -REG	TBD			Perchlorate, Explosives, TCLP Metals
RSA-204 Borrow Source Sampling					
204-BORROW1	204-BORROW1 -SO- AAR0529 -REG	TBD	204-BORROW1-SO-AAE0530-FD		TCL VOCs, TCLs SVOCs w/LL PAHs, Perchlorate, Pesticide, PCBs, TAL Metals
204-BORROW2	204-BORROW2 -SO- AAR0531 -REG	TBD		204-BORROW2-SO-AAE0531-MS/MSD	TCL VOCs, TCLs SVOCs w/LL PAHs, Perchlorate, Pesticide, PCBs, TAL Metals

SFSP Worksheet No. 18 Sampling Locations and Methods/SOP Requirements

Sample Location	Sample Designation	Sample Depth (ft bgs)	QA/QC Sample Designation		Analytical Suite
			FD*	MS/MSD*	
RSA-204 Baseline Groundwater Sampling					
K-RS690	K-RS690 -GW- AAR3062 -REG	NA			TCL VOC, Perchlorate, Explosives+, Dissolved Gases, T/D Mn, As, Fe, Cr, Nitrate, Sulfate, TOC, Alkalinity
K-RS691	K-RS691 -GW- AAR3063 -REG	NA			TCL VOC, Perchlorate, Explosives+, Dissolved Gases, T/D Mn, As, Fe, Cr, Nitrate, Sulfate, TOC, Alkalinity
K142-RS1223	K142-RS1223 -GW- AAR3064 -REG	NA			TCL VOC, Perchlorate, Explosives+, Dissolved Gases, T/D Mn, As, Fe, Cr, Nitrate, Sulfate, TOC, Alkalinity
K204-RS1550	K204-RS1550 -GW- AAR3065 -REG	NA			TCL VOC, Perchlorate, Explosives+, Dissolved Gases, T/D Mn, As, Fe, Cr, Nitrate, Sulfate, TOC, Alkalinity
204-RS2027	204-RS2027 -GW- AAR3066 -REG	NA			TCL VOC, Perchlorate, Explosives+, Dissolved Gases, T/D Mn, As, Fe,Cr, Nitrate, Sulfate, TOC, Alkalinity
204-RS2029	204-RS2029 -GW- AAR3067 -REG	NA			TCL VOC, Perchlorate, Explosives+, Dissolved Gases, T/D Mn, As, Fe, Cr, Nitrate, Sulfate, TOC, Alkalinity
204-RS2030	204-RS2030 -GW- AAR3068 -REG	NA			TCL VOC, Perchlorate, Explosives+, Dissolved Gases, T/D Mn, As, Fe, Cr, Nitrate, Sulfate, TOC, Alkalinity
204-RS2031	204-RS2031 -GW- AAR3069 -REG	NA			TCL VOC, Perchlorate, Explosives+, Dissolved Gases, T/D Mn, As, Fe, Cr, Nitrate, Sulfate, TOC, Alkalinity
204-RS2032	204-RS2032 -GW- AAR3070 -REG	NA			TCL VOC, Perchlorate, Explosives+, Dissolved Gases, T/D Mn, As, Fe, Cr, Nitrate, Sulfate, TOC, Alkalinity
204-RS2033	204-RS2033 -GW- AAR3071 -REG	NA			TCL VOC, Perchlorate, Explosives+, Dissolved Gases, T/D Mn, As, Fe, Cr, Nitrate, Sulfate, TOC, Alkalinity
204-RS2034	204-RS2034 -GW- AAR3072 -REG	NA	204-RS2034-GW-AAR3073-FD		TCL VOC, Perchlorate, Explosives+, Dissolved Gases, T/D Mn, As, Fe, Cr, Nitrate, Sulfate, TOC, Alkalinity
204-RS2668	204-RS2668 -GW- AAR3074 -REG	NA			TCL VOC, Perchlorate, Explosives+, Dissolved Gases, T/D Mn, As, Fe, Cr, Nitrate, Sulfate, TOC, Alkalinity
204-RS2670	204-RS2670 -GW- AAR3075 -REG	NA	204-RS2670-GW-AAR3076-FD		TCL VOC, Perchlorate, Explosives+, Dissolved Gases, T/D Mn, As, Fe, Cr, Nitrate, Sulfate, TOC, Alkalinity
204-RS2672	204-RS2672 -GW- AAR3077 -REG	NA			TCL VOC, Perchlorate, Explosives+, Dissolved Gases, T/D Mn, As, Fe, Cr, Nitrate, Sulfate, TOC, Alkalinity
204-RS2673	204-RS2673 -GW- AAR3078 -REG	NA			TCL VOC, Perchlorate, Explosives+, Dissolved Gases, T/D Mn, As, Fe, Cr, Nitrate, Sulfate, TOC, Alkalinity
204-RS2674	204-RS2674 -GW- AAR3079 -REG	NA			TCL VOC, Perchlorate, Explosives+, Dissolved Gases, T/D Mn, As, Fe, Cr, Nitrate, Sulfate, TOC, Alkalinity

SFSP Worksheet No. 18 Sampling Locations and Methods/SOP Requirements

Sample Location	Sample Designation	Sample Depth (ft bgs)	QA/QC Sample Designation		Analytical Suite
			FD*	MS/MSD*	
204-RS2675	204-RS2675 -GW- AAR3080 -REG	NA			TCL VOC, Perchlorate, Explosives+, Dissolved Gases, T/D Mn, As, Fe, Cr, Nitrate, Sulfate, TOC, Alkalinity
204-RS2676	204-RS2676 -GW- AAR3081 -REG	NA			TCL VOC, Perchlorate, Explosives+, Dissolved Gases, T/D Mn, As, Fe, Cr, Nitrate, Sulfate, TOC, Alkalinity
204-RS2677	204-RS2677 -GW- AAR3082 -REG	NA			TCL VOC, Perchlorate, Explosives+, Dissolved Gases, T/D Mn, As, Fe, Cr, Nitrate, Sulfate, TOC, Alkalinity
204-RS2678	204-RS2678 -GW- AAR3083 -REG	NA			TCL VOC, Perchlorate, Explosives+, Dissolved Gases, T/D Mn, As, Fe, Cr, Nitrate, Sulfate, TOC, Alkalinity
204-RS2683	204-RS2683 -GW- AAR3084 -REG	NA			TCL VOC, Perchlorate, Explosives+, Dissolved Gases, T/D Mn, As, Fe, Cr, Nitrate, Sulfate, TOC, Alkalinity
204-RS2791	204-RS2791 -GW- AAR3085 -REG	NA		204-RS2669-GW-AAR3086-MS/MSD	TCL VOC, Perchlorate, Explosives+, Dissolved Gases, T/D Mn, As, Fe, Cr, Nitrate, Sulfate, TOC, Alkalinity
204-RS2792	204-RS2792 -GW- AAR3087 -REG	NA			TCL VOC, Perchlorate, Explosives+, Dissolved Gases, T/D Mn, As, Fe, Cr, Nitrate, Sulfate, TOC, Alkalinity
204-RS2793	204-RS2793 -GW- AAR3088 -REG	NA			TCL VOC, Perchlorate, Explosives+, Dissolved Gases, T/D Mn, As, Fe,Cr, Nitrate, Sulfate, TOC, Alkalinity
204-RS2794	204-RS2794 -GW- AAR3089 -REG	NA			TCL VOC, Perchlorate, Explosives+, Dissolved Gases, T/D Mn, As, Fe,Cr, Nitrate, Sulfate, TOC, Alkalinity
204-RS2824	204-RS2824 -GW- AAR3090 -REG	NA			TCL VOC, Perchlorate, Explosives+, Dissolved Gases, T/D Mn, As, Fe,Cr, Nitrate, Sulfate, TOC, Alkalinity
IDW Water Samples					
204-SITE	204-SITE -WA- AAR9062 -REG	NA			TCL VOCs, Perchlorate, Explosives+
204-SITE	204-SITE -WA- AAR9063 -REG	NA			TCL VOCs, Perchlorate, Explosives+
204-SITE	204-SITE -WA- AAR9064 -REG	NA			TCL VOCs, Perchlorate, Explosives+
204-SITE	204-SITE -WA- AAR9065 -REG	NA			TCL VOCs, Perchlorate, Explosives+
204-SITE	204-SITE -WA- AAR9066 -REG	NA			TCL VOCs, Perchlorate, Explosives+
204-SITE	204-SITE -WA- AAR9067 -REG	NA			TCL VOCs, Perchlorate, Explosives+
204-SITE	204-SITE -WA- AAR9068 -REG	NA			TCL VOCs, Perchlorate, Explosives+
204-SITE	204-SITE -WA- AAR9069 -REG	NA			TCL VOCs, Perchlorate, Explosives+
IDW Soil Samples					
204-SITE	204-SITE -SO- AAR9070 -REG	NA			Perchlorate
204-SITE	204-SITE -SO- AAR9071 -REG	NA			Perchlorate
204-SITE	204-SITE -SO- AAR9072 -REG	NA			Perchlorate

*The MS/MSD/FD locations are subject to change due to field conditions. Project chemist will be notified and data base updated accordingly.

FD - Field duplicate.
ft bgs - feet below ground surface.
MS - Matrix spike.
MSD - Matrix spike duplicate.
QA - Quality assurance.

SFSP Worksheet No. 18 Sampling Locations and Methods/SOP Requirements

Sample Location	Sample Designation	Sample Depth (ft bgs)	QA/QC Sample Designation		Analytical Suite
			FD*	MS/MSD*	

QC - Quality control.

SFSP Worksheet No. 20 Field Quality Control Summary

Parameters	Analytical Method	Matrix	Total Number of Samples	FD	MS	MSD	Equip. Rinsate (1/event)	Trip Blank (1/cooler)	TAT Needed[a]	Sample Container/Preservation Requirements[b]	Holding Time	Total Number of Containers
RSA-204 Excavation												
Soil Samples Excavation 1												
Perchlorate	6850	Soil	44	5	3	3	1	0	5 Days	4-oz jar; Headspace required	28 days	56
Soil Samples Excavation 2												
Perchlorate	6850	Soil	100	10	5	5	3	0	5 Days	4-oz jar; Headspace required	28 days	123
Stockpile Samples												
Perchlorate	6850	Soil	83	8	4	4	0	0	5 Days	4-oz jar; Headspace required	28 days	99
Explosives+	8330A	Soil	83	8	4	4	0	0	5 Days	4-oz jar	14 days extraction; 40 days analysis	99
TCLP Metals	1311/3005A/6010C/7470A	Soil	83	0	0	0	0	0	Normal	4 oz jar	6 months; Mercury - 28 days	83
Borrow Samples												
TCL VOCs	6850	Soil	2	1	1	1	0	0	Normal	3 Terra Cores in Methanol/sodium bisulfate	14 days	5
TCL SVOCs w/LL PAHs	3540C/8270D	Soil	2	1	1	1	0	0	Normal	4-oz jar	14 days extraction; 40 days analysis	5
Pesticides	3540C/8081B	Soil	2	1	1	1	0	0	Normal	4-oz jar	14 days extraction; 40 days analysis	5
PCBs	3540C/8082A	Soil	2	1	1	1	0	0	Normal	4-oz jar	14 days extraction; 40 days analysis	5
TAL Metals	3050B/6010C/7471A	Soil	2	1	1	1	0	0	Normal	4 oz jar	6 months; Mercury - 28 days	5
Groundwater Baseline												
TCL VOCs	5030B/8260B	Water	26	2	1	1	2	9	Normal	3 x 40ml vials w/septa; HCl to pH<2	14 days	123
Perchlorate	6850	Water	26	2	1	1	2	0	Normal	125mL poly (filter thru 0.2 micron filter); headspace required	28 days	32
Explosives+	8330A	Water	26	2	1	1	2	0	Normal	2 x 1L amber	7 days extraction; 40 days analysis	64
Dissolved Gases	RSA-175	Water	26	2	1	1	2	0	Normal	3 x 40ml vials w/septa; HCl to pH<2	14 days	64
T/D Mn,As,Fe,Cr	3005A/6010C	Water	46	2	1	1	2	0	Normal	2 x 1L amber	6 months	104
TOC	9060	Water	26	2	1	1	2	0	Normal	250 m HPDE; H_2SO_4 ph<2	28 days	64
Alkalinity	SM2320B	Water	26	2	1	1	2	0	Normal	1 x 250 ml	14 days	64
Nitrate/Sulfate	300	Water	26	2	1	1	2	0	Normal	1 x 500 ml	48 hours	64
IDW Water												
TCL VOCs	5030B/8260B	Water	8	0	0	0	0	0	Normal	3 x 40-mL vials w/ septa; HCl to pH<2	14 days	24
Explosives+	8330A	Water	8	0	0	0	0	0	Normal	2 x 1L amber	7 days extraction; 40 days analysis	16

SFSP Worksheet No. 20 Field Quality Control Summary

Parameters	Analytical Method	Matrix	Total Number of Samples	FD	MS	MSD	Equip. Rinsate (1/event)	Trip Blank (1/cooler)	TAT Needed[a]	Sample Container/Preservation Requirements[b]	Holding Time	Total Number of Containers
Perchlorate	6850	Water	8	0	0	0	0	0	Normal	125mL poly (filter thru 0.2 micron filter); headspace required	28 days	8
IDW Soil												
Perchlorate	6850	Soil							5 Days	4-oz jar; Headspace required	28 days	0

FD - Field Duplicate.
MS - Matrix spike.
MSD - Matrix spike duplicate.
TAT - Turnaround time.

Worksheet No. 26 Sample Handling System

SAMPLE COLLECTION, PACKAGING, AND SHIPMENT (FIELD)
Sample Collection (Personnel/Organization): Wally Cooper or designee/CB&I
Sample Packaging (Personnel/Organization): Brian Rhodes or designee/CB&I
Coordination of Shipment (Personnel/Organization): Vicki Graves or designee/CB&I
Type of Shipment/Carrier: Cooler/Lab Courier, UPS
SAMPLE RECEIPT AND ANALYSIS
Sample Receipt (Personnel/Organization): Sample Custodians/Empirical Laboratory, LLC
Sample Custody and Storage (Personnel/Organization): Sample Custodians/Empirical Laboratory, LLC
Sample Preparation (Personnel/Organization): Extraction Lab, Metals Preparation Lab/Empirical Laboratory, LLC
Sample Determinative Analysis (Personnel/Organization): GC/Liquid Chromatography Lab, GC/MS Lab, Metals Preparation Lab/Empirical Laboratory, LLC
SAMPLE ARCHIVING
Field Sample Storage (No. of days from sample collection): 60 days from receipt
Sample Extract/Digestate Storage (No. of days from extraction/digestion): 3 months from sample extraction/ digestion
Biological Sample Storage (No. of days from sample collection): NA
SAMPLE DISPOSAL
Personnel/Organization: Sample Custodians/ Empirical Laboratory, LLC
Number of Days from Analysis: 30 days from submittal of final report or 60 days from receipt, whichever is longer

Post sample collection in the field will be conducted in accordance with SOPP 15.0 *Non-Hazardous Sample Handling, Packaging, and Shipping.* This procedure is located in the RSA installation-wide quality assurance program plan, Volume II (Shaw, 2013).

Specific laboratory sample custody procedures (receipt of samples, archiving, and disposal) will be used for all post-sample handling. Coolers will be received and checked for proper temperature. A sample cooler receipt form will be filled out to note the conditions and any discrepancies. The chain of custody will be checked against the sample containers for correctness. Samples will be logged into the data base and given a unique log number, which can be tracked through processing. The Project Chemist will be notified of any problems.

ATTACHMENT F-1

GENERAL SOIL SAMPLE COLLECTION
ALABAMA DEPARTMENT OF ENVIRONMENTAL MANAGEMENT
SOP #2150, REV 5.0, VERSION DATE 8/12/16

GENERAL SOIL SAMPLE COLLECTION

SOP #2150

Rev. 5.0

VERSION DATE: 08/12/16

PREPARED BY:		**DATE**	8/12/16
REVIEWED BY:	Branch or Division Chief	**DATE**	8/16/16
APPROVED BY:	Quality Assurance Manager	**DATE**	8/22/2016

Alabama Department of Environmental Management

1400 Coliseum Blvd Montgomery, AL	1350 Coliseum Blvd Montgomery, AL	2715 Sandlin Rd Decatur, AL	110 Vulcan Rd Birmingham, AL	2204 Perimeter Rd Mobile, AL

TABLE OF CONTENTS

General Soil Sample Collection....1
1 Scope and Application....1
2 Summary of Method....1
3 Definitions....1
4 Health & Safety Warnings....2
5 Interferences....2
6 Personnel Qualifications....2
7 Equipment and Supplies....2
8 Equipment Selection....3
9 Sample Collection....3
9.1 General....3
9.2 Grab Sample Using a Scoop....3
9.3 Grab Sample Using an Auger....3
9.4 Grab Sample Using a Split Spoon (Barrel) Sampler....4
9.5 Composite Samples....4
9.6 Multi-Increment Discrete Sampling....4
9.7 Special Sampling – High Concentration (VOC)....6
10 Sample Handling and Preservation....7
11 Troubleshooting....7
12 Data Acquisition, Calculations, & Data Reduction Requirements....7
13 Data and Records Management....7
14 Quality Control & Quality Assurance....8
15 Reference....8
16 Change Tracking....9

PREFACE

This Standard Operating Procedures (SOP) Manual supersedes all Departmental SOPs relating to the methods addressed and is designed to be periodically reviewed and updated. The primary purpose of this document is to establish and maintain uniform operational and quality control guidance. The compliance with these procedures is essential to produce reliable data. Any deviation from this SOP must be documented and approved by the Project QA/QC Coordinator and/or project supervisor.

DISCLAIMER

This document has been prepared for use by the staff of the Alabama Department of Environmental Management (ADEM). Mention of trade names or commercial products does not constitute endorsement or recommendation for use. No portion of this manual is intended to supersede any Departmental policy memorandum issued by the Director or Deputy Director.

NOTE

Any alpha suffix added to the version date indicates the incorporation of corrections for non-critical typographic errors or formatting, i.e., no methodology changes were incorporated.

GENERAL SOIL SAMPLE COLLECTION

1 SCOPE AND APPLICATION

1.1 This method describes representative sample collection of surficial and subsurface soils. Any constituents requiring special sampling techniques should be referenced in an additional standard operating procedure.

1.2 These are standard operating procedures which may be varied or changed as required, dependent upon site conditions, site study plans, quality assurance project plans, equipment limitations or limitations imposed by the procedure. In all instances, the actual procedures used should be documented and described in the appropriate site report. These procedures are not meant to be conducive of all techniques available but outline those that are most likely to be used during regular sampling events.

2 SUMMARY OF METHOD

Soil samples may be collected using a variety of methods depending on the depth, the type of sample required (disturbed or undisturbed) current native or non-native characteristics of the surficial and subsurface media. Surficial soils may be sampled using a trowel, scoop or shovel. Subsurface soils may be sampled by a hand-auger, core-barrel sampler, split-spoon, or backhoe. Regardless of the method used, precautions shall be taken to ensure the sample collected is representative of the soil being sampled.

3 DEFINITIONS

3.1 **Discrete Grab Sample** - An individual sample collected at one location and depth. Grab samples shall be used to characterize the medium at a particular location at one instant in time.

3.2 **Composite Sample** - A sample that is composed of aliquots collected at points within a vertical or horizontal track from more than one decision unit that are analyzed as one sample.

3.3 *MULTI INCREMENT* ® sampling – This is a comprehensive sampling methodology used to represent a specific population (decision unit) and provide a foundation for defensible decision making. The term *MULTI INCREMENT* incorporates in a systematic approach many disciplines into the final sampling plan design and evaluation. The process begins with proper development of project objectives (e.g., Data Quality Objectives, Sample Quality Criteria). Next, the tenants of Sampling Theory are employed to determine the appropriate sample mass, number of increments, and correct selection and use of sampling tools for sample collection. Quality control is incorporated for assessment of the sampling plan design and, ultimately, data quality. The combination of these disciplines forms the foundation of the *MULTI INCREMENT* methodology that generates a representative sample that directly provides data to meet project objectives. (Ref. EnviroStat) (*MULTI INCREMENT* ® is a registered trademark of EnviroStat, Inc.)

3.4 **Surficial Soil Zone** – This term is defined programmatically, but for the purpose of this SOP will be understood to be those soils extending from the ground surface to one foot below ground surface.

3.5 **Subsurface Soil Zone** – This term is defined programmatically, but for the purpose of this SOP will be understood to be those soils immediately below the surficial soil zone and extending to the top of the water table.

4 HEALTH & SAFETY WARNINGS

4.1 General field health and safety warnings apply (i.e., slips, trips, and falls).

4.2 Any sample either known or thought to be hazardous shall be so identified on both the sample container and the field sample collection record. Information explaining the hazard (i.e., ignitable, corrosive, reactive, or toxic) shall be listed. This is necessary from a safety perspective and is also useful to the analytical laboratory in helping to prevent contamination of the analytical equipment and the associated down time.

5 INTERFERENCES

All material and/or equipment encountering the sample must be constructed of materials that meet the requirements of the targeted parameter to prevent contamination and any other contribution rendering the sample unrepresentative of the conditions intended for sampling.

6 PERSONNEL QUALIFICATIONS

6.1 No employee shall conduct these techniques until he/she has actual field experience and has successfully demonstrated proficiency of these techniques under the supervision of a senior staff member.

6.2 Each new Departmental employee shall accompany an experienced field employee on as many field trips as possible to experience the differing types of field situations to which the new employee may be required to participate.

6.3 During this training period, the new employee will be permitted to perform all facets of field investigations, including sampling, under the direction and supervision of senior technical staff members.

6.4 Depending on the project for which the samples are collected, a 40 hr hazardous waste safety-training course may be required along with the annual 8 hr updates.

7 EQUIPMENT AND SUPPLIES

Glass Jars or other appropriate sample containers
Labels/Labeling Tape
Pencil/Marking Pen
Cooler with ice
Chain-of-Custody Form(s)
Stainless Steel Hand Augers
Extension rods
T-handle
Direct-push/Drilling Rig
Core-barrel Sampler/Split Spoon Sampler
Slide/Safety Hammer
Stainless Steel/Plastic Pan or Bucket
Stainless Steel Scoop/Spatula
Plastic sheeting
Paper Towels
Antibacterial Soap/Hand Sanitizer
Equipment Cleaning Supplies
Disposable Gloves
Wash Water/Decon supplies

8 EQUIPMENT SELECTION

Equipment selection should be determined by sampling zone. Typically, trowels, scoops, spatulas, and other applicable soil sampling tools are used to sample shallow soils (surficial) from a depth between 0-1′ below land surface. These items may also accompany hand augers, core-barrel or split spoon samplers, or a variety of direct-push soil sampling devices when collecting deeper subsurface soil samples. Please refer to the site Study Plan or Quality Assurance Project Plan for specific sampling requirements.

9 SAMPLE COLLECTION

9.1 General

9.1.1 Soil is considered to be composed of particle sizes, on or below land surface, two millimeters or less (≤2mm) for risk assessment purposes. All particle sizes should be represented in a soil sample collected for disposal characterization.

9.1.2 Collection of samples near the surface (depths between 0-1" below ground surface) can be achieved using a clean spatula, scoop or trowel. Subsurface samples will typically required the use of core barrel samplers, hand augers, or direct push technology (Geoprobe®) or other drilling equipment to acquire samples at greater depths.

9.1.3 Exercise caution not to disturb the area to be sampled as this could produce an unrepresentative sample (i.e., volatile organic compound sampling).

9.1.4 Excavated soil or soil cuttings known to be contaminated or suspected to be contaminated should be containerized or stockpiled on-site on plastic protected from wind and rain until appropriate disposal is possible. In the event that sample results fall below ADEM Corrective Action Limits, the pit or borings may be backfilled with remaining soils, bentonite chips, pellets, or neat cement grout.

9.2 Discrete Grab Sample Using a Scoop

9.2.1 Utilizing a clean scoop, collect soil from the desired sample location and place directly into a clean sample container or stainless steel, plastic or other clean or lined container depending on sample volume needed for laboratory analyses or sample processing.

9.2.2 After obtaining the appropriate volume for laboratory analyses, transfer the sample into a labeled container(s) utilizing the same scoop used for sample collection.

9.3 Discrete Grab Sample Using an Auger

9.3.1 Depending on the sampling requirements, samples can be collected directly from the auger head or by use of a core barrel sampler.

9.3.2 Attach the auger bit and T-handle to the extension rod.

9.3.3 Begin auguring, periodically removing excessive soils. Contain unwanted soil cuttings in a bucket or plastic trash bag for proper disposal.

9.3.4 Upon reaching the desired depth, slowly remove auger taking care to create as little disturbance to inner walls as possible and avoid introducing surface material.

9.3.5 Upon collection of the desired volume of sample, transfer the sample to the appropriate sample container.

9.4 Discrete Grab Sample Using a Core Barrel Sampler

9.4.1 Assemble sampler (cutting shoe, sampler body, liner (if necessary), and drive head).

9.4.2 Push or hammer sampler the length of the sampler body or desired depth.

9.4.3 Twist the sampler in order to break the soil core loose from the end of the sampler.

9.4.4 Pull or reverse hammer the sampler out of the ground.

9.4.5 Upon collection of the desired volume of sample, transfer the sample to the appropriate sample container.

9.5 Composite Samples

9.5.1 With a pre-cleaned scoop or auger, collect samples at all appropriate depths using the procedures outlined in Section 9.1 through Section 9.4 and place into a stainless steel, plastic or other cleaned or lined container.

9.5.2 Mix to obtain a sample of the entire sampling interval and divide into appropriate sample containers. Label and preserve according to Section 10.

9.6 *Multi Increment®* Sampling

9.6.1 *MULTI INCREMENT®* sampling is a methodology that, when systematically planned and implemented, can determine the average concentration representative of the soil contained within a defined area, i.e., the "decision unit." A sample (usually composed of 30-50 or more aliquots for surficial samples) is taken from a systematic grid with a random starting point and is analyzed to give a statistical representation of the soil in each decision unit within the constraints of sample volumes in laboratory analyses. *MULTI INCREMENT®* samples differ from simple composite samples in that the multi-increment sample is restricted to one decision unit, whereas a composite may be collected without regard to a specific decision unit.

9.6.2 *Decision Unit Selection* – The decision unit is a defined area or volume of media where a decision is to be made regarding the extent and magnitude of contaminants with respect to the environmental concerns posed by the contaminants. Therefore, the identification and delineation of the decision unit is critical when using *MULTI INCREMENT®* sampling methodology. The decision unit shape and size is site specific and a site, depending on size and complexity, may be divided into multiple decision units. Consequently, three-dimensional decision units may be necessary when conducting sub-surface site characterizations since the contaminants most likely are not distributed evenly, horizontally or vertically. All of the identifiable decision units should be defined and listed for the primary decision-maker to decide which decision unit(s) to assess. If the location of a source area is unknown or has been removed, all available means must be used to delineate the decision unit, including historic photos, site information, interviews with knowledgeable parties, and field screening techniques.

(MULTI INCREMENT® is a registered trademark of EnviroStat, Inc.)

9.6.3 *MI Sample Collection* (General) – This collection method applies to the analysis of most parameters except those which require special sample collection methods, i.e., volatile organic compounds.

9.6.3.1 Collect sample aliquots along a systematic grid (triangular recommended) with a random starting point.

9.6.3.2 Sample aliquots are collected within the same decision unit utilizing clean (clean initially; per decision unit; it is not possible to cross-contaminate within the same decision unit and media) scoops, augers, or other appropriate sampling devices for the appropriate depths being assessed using the procedures outlined in Section 9.1 through Section 9.4.

9.6.3.3 Place sample aliquots in a stainless steel, plastic, or other clean, lined container.

9.6.3.4 Process soil by crushing/pulverizing or grinding the sample and passing it through a 2mm sieve and into a clean, lined container. Soil properties at the time of sample collection may require that drying (overnight at room temperature under a vent hood; except for VOC analysis) is necessary to assist in sample processing. Perform sample processing within 24 hours after sample collection.

9.6.3.5 Upon completion of sieving, utilize a scoop, spatula, or sectorial splitter (paper or other appropriate material) to divide the sample into appropriate sample containers. Subsequent splitting of the sample may be necessary for the reduction of sample volume.

9.6.4 *MI Sample Collection* (VOC) – This sampling and analysis method is acceptable for VOC concentrations exceeding 200µg/kg (200 ppb in soil) (see EPA Test Method 5030).

9.6.4.1 Obtain soil samples via a primary core-barrel sampling device along a triangular systematic grid with a random starting point.

9.6.4.2 Then obtain sub-sample aliquots from the primary soil core utilizing a secondary, typically smaller, coring device such as a 10 mL disposable syringe with the tip cut off. One 5-gram (±0.5g), ≈3mL/cc, aliquot is collected from each primary core sample.

9.6.4.3 Add each aliquot to an amber glass bottle of an appropriate size to contain the volume of sample to be collected. Each bottle is prepared with purge and trap grade methanol at a ratio of 5mL of methanol to 5g of soil (1:1 ratio). For example if a 50 point grid was to be sampled that grid would theoretically result in 250 grams (± 10%) of soil, therefore 250 mL of methanol would be placed in the bottle prior the sampling event and the bottle weight with methanol recorded on the bottle. [The methanol acts as both a preservative and extraction solvent. The theory in this extraction method is that the organics present in the sample leave the soil to reside in the methanol (organic solvent); like dissolves like. A portion of the methanol extract is added to a volume of water and analyzed.]

9.6.4.4 After the addition of all the aliquots to the container for a decision unit, weigh and record the bottle weight containing the sample composed of methanol and soil. The difference in weights will reveal the amount of soil mass composing the sample for analysis.

9.6.4.5 The mass of soil and volume of methanol are necessary for the calculations following the analysis in order to report the mass/mass (µg/kg) result. In this analytical method up to 100 µL of the methanol extract is placed in 25 mL of analyte-free water (or ratio of: i.e., 80 µL to 20 mL, etc.) and analyzed by an appropriate method, SW 846 Method 8260 for example.

9.6.4.6 Retain the remaining soil from the primary soil cores for sample processing as in the General *MULTI INCREMENT®* sample collection method if other analyses are necessary. The total weight of this soil is recorded before and after drying in order to determine the percent (%) moisture in the soil. If soil moisture is >10%, then a corresponding dilution factor is applied to the concentration calculations.

9.6.5 Secure bottle with a screw-cap with PTFE-lined lid.

9.6.6 Label and preserve according to Section 10.

9.7 Special Sampling – Volatile Organic Compounds (Discrete Sampling)

9.7.1 *High Level VOC Collection Method (>200 µg/kg)*

9.7.1.1 Soil samples are initially obtained via a primary core-barrel sampling device.

9.7.1.2 Sub-sample aliquots are then obtained from the primary soil core utilizing a secondary, typically smaller, coring device such as a 10 mL disposable syringe with the tip cut off.

9.7.1.3 One 5-gram (± 0.5g), ≈3 mL/cc, aliquot is collected from the primary core sample for each 40ml sample vial.

9.7.1.4 Each sample set consists of 2-3: 40 mL vials with 5g (± 0.5g) of soil and 5 mL of purge and trap grade methanol. One additional empty vial containing 5g (± 0.5g) of soil is collected for each sample set for dry weight analysis (% moisture).

9.7.2 *Low Level VOC Collection Method (<200 µg/kg)*

9.7.2.1 Soil samples are initially obtained via a primary core-barrel sampling device.

9.7.2.2 Sub-sample aliquots are then obtained from the primary soil core utilizing a secondary, typically smaller, coring device such as a 10 mL disposable syringe with the tip cut off.

9.7.2.3 One 5-gram (±0.5g), ≈3mL/cc, aliquot is collected from the primary core sample for each 40 mL sample vial.

9.7.2.4 Each sample set consists of 2-3: 40mL vials with 5 g (±0.5 g) of soil and 1g sodium bisulfate preservative and a magnetic stirring bar. One additional empty vial containing 5g (± 0.5 g) of soil is collected for each sample set for dry weight analysis (% moisture). This method requires 5 mL of water to be added to the vial by the automatic sampling device on the analytical instrument (GC/MS) at the time of analysis.

9.7.3 Secure each vial with a screw-cap and septum seal lid.

9.7.4 Label and preserve according to Section 10.

9.8 Special Note: Collection of Soil Samples for Disposal Characterization

When collecting soil samples for disposal purposes (Hazardous Waste Determinations) any of the above mentioned sampling procedures may be used except for the step in any procedure that includes sieving a sample. A sample collected for disposal purposes must represent all of the particle sizes present in the collected sample not just the ≤2 millimeter fraction because all of the material is subject to disposal not exposure alone as in risk assessment. These samples are subjected to

total concentration analyses and toxicity characteristic leaching procedure (TCLP) analyses of chemicals of possible concern.

10 SAMPLE HANDLING AND PRESERVATION

10.1 Samples must be preserved immediately upon collection (in the field) in order to maintain integrity unless otherwise allowed by the specific analysis method. All samples preserved with chemicals shall be clearly identified by indicating on the sample container and field chain-of-custody record that the sample is preserved.

10.2 All samples must be fully identified either by writing directly on the container or by using waterproof pen on a label. This information should include sample location information, date, time (if more than one sampling time from this location), preservative name, collector's initials and analyses requested (optional).

10.3 Samples must be transported on ice and held below 6° C during transport. Samples must not be allowed to become submerged in ice water. Cold packs may be substituted for ice when accompanied by a temperature blank.

10.4 Samples shall be delivered to the analyzing laboratory as soon as possible adhering to proper holding times. The sample collector must allow enough time for sample preparation, analysis and reanalysis by the laboratory. Ideally, samples should be shipped the day of collection for overnight delivery to the laboratory. The elapsed time between sample collection and the initiation of laboratory analyses shall be within the prescribed time allowed for each individual analysis.

10.5 When necessary during field studies, field cleaning should be performed as outlined in the specific sample collection SOP (if applicable) and SOP #9025, Field Equipment Cleaning Procedures. Any deviations from the cleaning procedures should be documented.

10.6 All sampling equipment must be cleaned as specified in SOP #9025 after field use and before storage. Such equipment must be inspected and tested before each field use and any necessary repairs shall be made and documented.

11 TROUBLESHOOTING

12 DATA ACQUISITION, CALCULATIONS, & DATA REDUCTION REQUIREMENTS

13 DATA AND RECORDS MANAGEMENT

13.1 All samples shall be fully identified and sample chain-of-custody maintained for all samples collected. See SOP #9040 Station, Sample Identification and Chain of Custody Procedures.

13.2 All sample collection activities shall be traceable, through field records or notes, to the person/crew collecting the sample. All maintenance and calibration records for sampling equipment shall be kept so that they are similarly traceable.

14 QUALITY CONTROL & QUALITY ASSURANCE

14.1 Trip blank, duplicate, and equipment rinse samples for field quality control must be collected and analyzed at the frequency outlined in SOP #9021 Field Quality Control: Measurements and Samples.

14.2 Disposable sampling gloves constructed of an appropriate chemical resistant material should be worn and changed in between each sample and media sampled for personal protection and in order to reduced the possibility of cross contamination.

15 REFERENCE

ADEM. 2015 (as amended). Standard Operating Procedures #9021 Field Quality Control: Measurements and Samples, Alabama Department of Environmental Management (ADEM), Montgomery, AL.

ADEM. 2013 (as amended). Standard Operatmg Procedures #9025 Field Equipment Cleaning Procedures, Alabama Department of Environmental Management (ADEM), Montgomery, AL.

ADEM. 2015 (as amended). Standard Operating Procedures #9040 Station, Sample Identification and Chain of Custody Procedures, Alabama Department of Environmental Management (ADEM), Montgomery, AL.

ADEM. 2005 (September revised). Alabama Environmental Investigation and Remediation Guidance. Alabama Department of Environmental Management (ADEM), Montgomery, AL.

ADEM. 2007 June revised. Alabama Risk-Based Corrective Action Guidance Manual. Alabama Department of Environmental Management (ADEM), Montgomery, AL.

ADEM. 2001 (as amended). ARBCA: Alabama Risk-Based Corrective Action for Underground Storage Tanks, Guidance Manual Revision 1.0. Alabama Department of Environmental Management (ADEM), Montgomery, AL.

APHA, 1995. Standard methods for the examination of water and wastewater-Method 9060A. 19th ed. American Public Health Association, American Water Works Association and Water Pollution Control Federation (APHA). APHA, Washington, D.C.

EnviroStat, Inc., 2016. http://envirostat.org/multiincrementdefinition.htm .

USEPA. 2000. Standard Operating Procedures #2012 Soil Sampling. United States Environmental Protection Agency (USEPA), Washington, D.C.

16 CHANGE TRACKING

Rev. Date (Review Date) Rev. #	Approved By:	Summary of Modifications
03/28/2007 Rev. 0		Original Version
03/28/07a (03/11/08)		Annual Review. Non-critical typographical and formatting changes. Changed verbiage in Sec 10.4. Added two references.
05/07/10 Rev. 1.0	M. Thomas	Periodic Review. Made non-critical formatting and grammatical changes. Added Sec. 9.6 and 9.7. Modified Sec. 10.3 for temperature—from 4°C to 6°C.
07/22/10 Rev. 1.1	M. Thomas	Made the critical change of removing the statement that this method may not be used with subsurface sampling equipment. This method may be used when utilizing subsurface sampling equipment—Sec. 1.1.
03/14/11 Rev. 2.0	M. Thomas	Periodic review. Made non-critical grammatical and formatting changes. Added the following sections: 9.1.1; 9.4; 9.9; and 14.2. Modified the following sections: 9.1.2; 9.1.3; 9.1.4; 9.3.1; 9.3.2; 9.3.5; 9.3.6; and 9.3.7.
05/17/13 Rev. 3.0	M. Thomas	Periodic Review. Made non-critical formatting and grammatical changes. Modified the following sections: 1.1; 2; 3.1; 3.2; 7; 8; 9.3.3; 9.3.4; 9.3.5; 9.5.1; 9.5.2; and 9.6.
07/09/14 Rev. 4.0	M. Thomas	Periodic Review. Made non-critical formatting and grammatical changes. Added Sec. 9.4.5.
08/12/16 Rev. 5.0	M. Thomas	Periodic Review. Made non-critical formatting and grammatical changes. Added Sec. 3.3. Modified the following sections: 3.2; 7; 8; 9.1.3; 9.1.4; 9.2.1; 9.2.3; 9.3.3; 9.3.5; 9.4.5; 9.6.1; and 9.6.2. Deleted Sec. 9.2.2.

APPENDIX G

BEST MANAGEMENT PRACTICES

Appendix G

Alabama Best Management Practices
RSA-204, Oxidizer Facility, Building 7691
Operable Unit 10
U.S. Army Garrison-Redstone
Madison County, Alabama
EPA ID No. AL7 210 020 742

U.S. Army Garrison-Redstone
Madison County, Alabama

Prepared for:

Mission & Installation Contracting Command
ATTN: MICC Center – FSH
2107 17th Street
Building 4197, Suite 15
Fort Sam Houston, Texas 78234-5015

Prepared by:

CB&I Federal Services LLC
2410 Cherahala Boulevard
Knoxville, Tennessee 37932

Task Order 0008
Contract Number W91ZLK-09-D-0006
CB&I Project No. 147104

September 2016

Reference:

Alabama Handbook for Erosion Control, Sediment Control and Stormwater Management on Construction Sites and Urban Areas. Auburn, AL, June 15, 2009.

Site Preparation

A. Construction Exit Pad (CEP)

B. Land Grading (LG)

Surface Stabilization

C. Permanent Seeding (PS)

D. Temporary Seeding (TS)

Runoff Conveyance

E. Check Dam (CD)

F. Diversion (DV)

G. Grass Swale (GS)

Sediment Control

H. Sediment Barrier (SB)

Other

I. Corrective Action Log

J. Amendment Log

K. Grading and Stabilization Activities Log

L. Rainfall Documentation and Observations

A. Construction Exit Pad (CEP)

Construction Exit Pad (CEP)

Practice Description

A construction pad is a stone base pad designed to provide a buffer area where mud and caked soil can be removed from the tires of construction vehicles to avoid transporting it onto public roads. This practice applies anywhere traffic will be leaving a construction site and moving directly onto a public road or street.

Planning Considerations

Roads and streets adjacent to construction sites should be kept clean for the general safety and welfare of the public. A construction exit pad (Figure CEP-1) should be provided where mud can be removed from construction vehicle tires before they enter a public road.

Where possible the construction exit pad should be located and constructed at a site where surface runoff from the pad will not transport sediment from the pad off the site. If the pad slope toward the road exceeds 2%, a diversion ridge 6” to 8” high with 3:1 side slopes should be constructed across the foundation approximately 15 feet from the entrance. This diversion ridge should divert surface runoff from the pad away from the road and into a sediment trap or basin

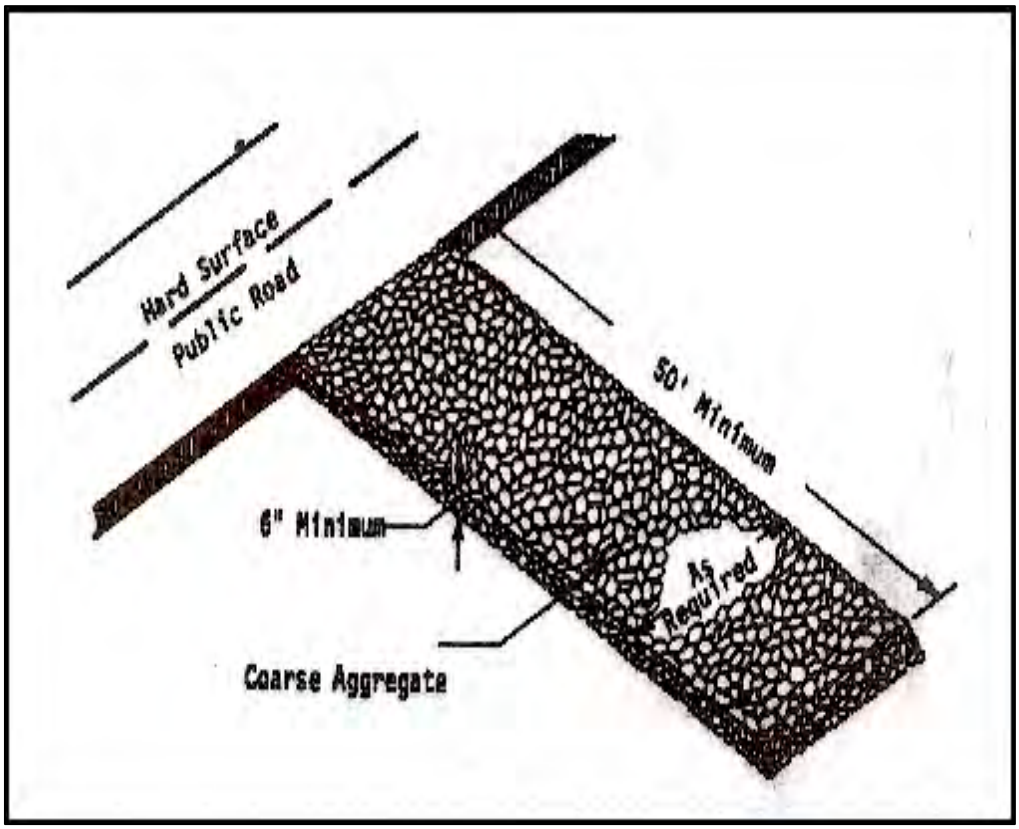

Figure CEP-1 Gravel Construction Exit

If the action of the vehicle traveling over the gravel pad does not sufficiently remove the mud or if the site is in a particularly sensitive area, a washing facility should be included with the pad (Figure CEP-2). When a washing facility is required all wash water shall be diverted to a sediment trap or basin.

If the construction exit pad is located in an area with soils that will not support traffic when wet, an underliner of geotextile will be required to provide stability to the pad.

Construction of stabilized roads throughout the development site should be considered to lessen the amount of mud transported by vehicular traffic. The construction exit pad should be located to provide for maximum use by construction vehicles.

Consideration should be given to limiting construction vehicles to only one ingress and egress point. Measures may be necessary to make existing traffic use the construction exit pad.

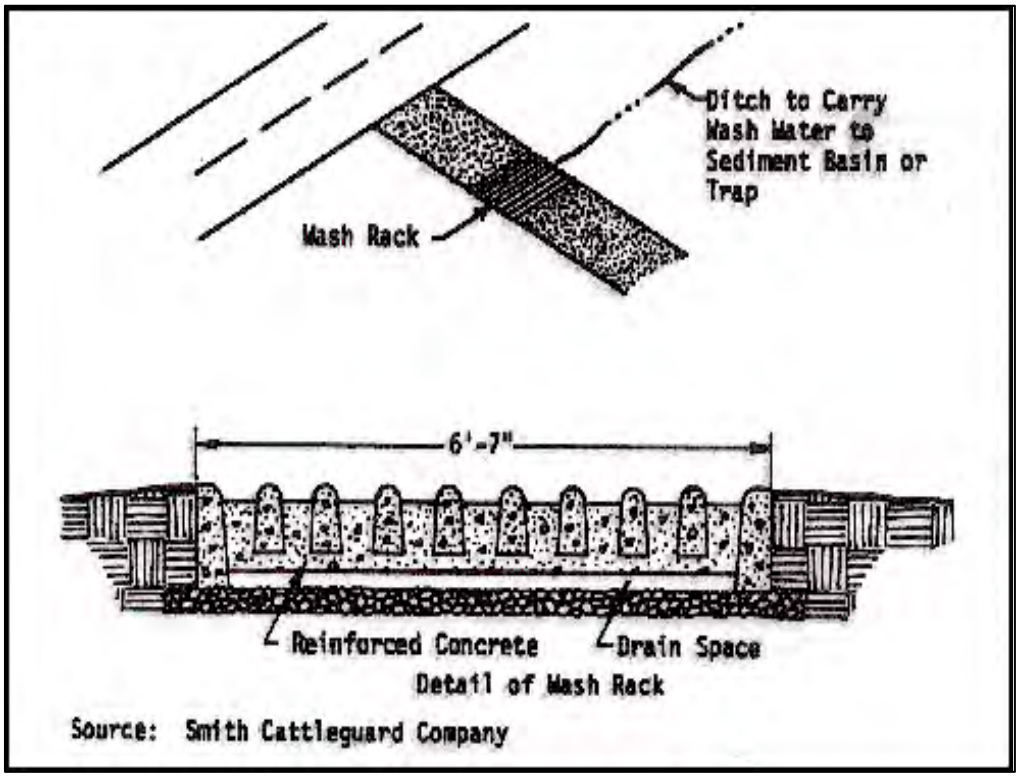

Figure CEP-2 Construction Exit with Wash Rack

Design Criteria

Aggregate size

Aggregate should be Alabama Highway Department coarse aggregate gradation No.1.

Pad Thickness

The exit pad shall have a minimum aggregate thickness of 6”.

Geotextiles

A non-woven geotextile meeting the requirements shown in the table below for Class IV geotextiles should be used under the rock when the subgrade is soft or the blow count is less than 10.

Table CEP-1 Requirements for Nonwoven Geotextile

Property	Test method	Class I	Class II	Class III	Class IV [1]
Tensile strength (lb) [2]	ASTM D 4632 grab test	180 minimum	120 minimum	90 minimum	115 minimum
Elongation at failure (%) [2]	ASTM D 4632	≥ 50	≥ 50	≥ 50	≥ 50
Puncture (pounds)	ASTM D 4833	80 minimum	60 minimum	40 minimum	40 minimum
Ultraviolet light (% residual tensile strength)	ASTM D 4355 150-hr exposure	70 minimum	70 minimum	70 minimum	70 minimum
Apparent opening size (AOS)	ASTM D 4751	As specified max. #40 [3]	As specified max. #40 [3]	As specified max. #40 [3]	As specified max. #40 [3]
Permittivity sec^{-1}	ASTM D 4491	0.70 minimum	0.70 minimum	0.70 minimum	0.10 minimum

Table copied from NRCS Material Specification 592.

1 Heat-bonded or resin-bonded geotextile may be used for classes III and IV. They are particularly well suited to class IV. Needle-punched geotextile are required for all other classes.
2 Minimum average roll value (weakest principal direction).
3 U.S. standard sieve size.

Pad Length

The exit pad should provide for entering and parking the longest anticipated construction vehicles. A pad is typically 50 feet long but the required length may be longer or shorter.

Pad Width

The exit pad width is typically 20 feet but may be narrower or wider to equal the full width of the vehicular egress.

Washing

A washing facility shall be provided if necessary to prevent mud and caked soil from being transported to public streets and highways. It shall be constructed of concrete, stone, and/or other durable materials. Provisions shall be provided for the mud and other material to be carried away from the washing facility to a sediment trap or basin to allow for settlement of the sediment from the runoff before it is released from the site.

B. Land Grading (LG)

Land Grading (LG)

Practice Description

Land grading is reshaping of the ground surface to provide suitable topography for buildings, facilities and other land uses, to control surface runoff, and to minimize soil erosion and sedimentation both during and after construction. This practice applies to sites where the existing topography must be modified to prepare for another land use, or where adapting proposed development to the existing landscape can reduce the erosion potential of the site and the cost of installing erosion and sediment control measures. In some instances other practices such as diversions can be used to reduce the length of continuous slopes and reduce erosion potential.

Planning Considerations

A detailed plan should be developed by a qualified design professional for all land grading activities at the project site. The plan should show all areas to be disturbed, the areas of cut, areas of fill, and the finished elevation for all graded areas.

The grading plan should be designed to protect existing vegetation where possible, especially around natural drainageways. Grading activities should be scheduled to minimize the area disturbed at any one time during the construction process. The plan should include provisions for stabilizing disturbed areas immediately after final grading is completed. Provisions should also be made to

protect existing underground utilities. Finally, topsoil should be removed and stockpiled for use in revegetating the site.

The grading plan should also include necessary practices for controlling sediment and erosion at the site. These practices could include stable outlets and slope breaks.

Design Criteria

Site Preparation

A detailed survey of the construction site should be performed by a qualified surveyor prior to grading plan development. This survey should include existing topographic information at the site including existing elevations, existing drainage patterns, locations of existing overhead and underground utilities, and construction limit boundaries.

The grading plan should require that the existing topsoil at sites to be graded be removed as the first step in the grading process. The plan should include a location on the construction site where topsoil will be stockpiled. Stockpiled topsoil should be protected by temporary vegetation (see Temporary Vegetation practice) or other appropriate temporary cover, such as plastic, until it is used to cover disturbed areas in advance of permanent vegetation of the site.

The grading plan should include a schedule of disturbance activities that minimizes the area disturbed at any point in time using sequencing and staging concepts. In areas where clearing of existing vegetation is planned, the area should be cleared and grubbed by removing trees, vegetation, roots and other debris such as trash. In areas to be filled all loose or weak soil and oversized rocks should be removed from the area. The foundation of the area to be filled should consist of soil or rock material of adequate strength to support the proposed fill material and the structures to be built at the site. The exact depth of material to be removed should be determined by a qualified geotechnical professional according to accepted engineering standards.

Grading

A plan for placement of fill should be developed by a qualified geotechnical professional. The plan should specify the source of fill materials, which should be obtained on site if possible. Materials used for fill, when placed according to the plans and specifications, should provide sufficient strength to support structures planned for construction at the location.

Loose fill material should be placed in layers not exceeding 9” in thickness. The materials should be compacted to a moisture content and to a dry density that will produce the design bearing strength required for structures planned at the site. A qualified geotechnical engineer should provide fill placement specifications using standard accepted engineering practices.

Slope lengths at the site should be minimized using diversions as slope breaks to reduce erosion potential (see Diversion practice). The following table gives guidance on the horizontal spacing of slope breaks:

Table LG-1 Guidelines for Spacing Slope Breaks [1]

Slope	Spacing (Ft)
33-50%	20
25-33%	40
15-25%	60
10-15%	80
6-10%	120
3-6%	200
<3%	300

[1] Adjustments in spacing may be made to account for soil and site conditions and professional experience of the site designer.

In areas where seepage and ground water are present subsurface drains should be installed to improve slope stability or soil bearing capacity (see Subsurface Drain practice).

Steep slopes should be avoided if possible. Slopes that are to be vegetated should be 2 horizontal to 1 vertical or flatter. If the slope is to be maintained by tractor or other equipment the slope should be 3 horizontal to 1 vertical or flatter. Slopes should be designed to blend with surrounding topography as much as possible.

Erosion Control

The grading plan should include provisions for stabilization of graded areas immediately after final grading is completed. On areas that will have no additional disturbance, permanent vegetation should be applied immediately to the site (see Permanent Seeding practice) if grading is finished during the planting season. If grading is finished outside of the recommended planting dates a temporary cover should be installed using a Temporary Seeding or other appropriate cover and the Permanent Seeding planned for the next planting period. On areas where work is to be interrupted or delayed for 14 working days or longer, such as topsoil stockpiles, the area should be stabilized using mulch or temporary seeding (see Mulching or Temporary Seeding practice). Other stabilization measures such as erosion control blankets should be used in extreme conditions, such as steep slopes and channels.

Where practical, runoff from undisturbed off-site areas should be diverted around the construction site to prevent erosion on the disturbed areas (see Diversion practice).

Sediment Control

Required sediment control practices should be installed before the land disturbance activities in the drainage area of the sediment control practices. Until disturbed areas can be stabilized, appropriate sediment control measures will be maintained to minimize sediment delivery off-site. Measures should include as a minimum:

- Sediment Barriers – Placed along toes of slopes and drainageways (see Sediment Barrier practice).
- Sediment Basins – Divert sediment laden runoff to basins as needed to minimize off-site sedimentation (see Sediment Basin practice).
- Inlet Protection – Where sediment-laden runoff is diverted to on-site stormwater drain inlets, the inlets should be protected with an appropriate sediment control practice.
- Stabilized Outlets – All runoff from the site should be conveyed in stabilized channels (see Grassed Swale, Lined Swale, or Channel Stabilization practice).

C. Permanent Seeding (PS)

Permanent Seeding (PS)

Practice Description

Permanent seeding is the establishment of perennial vegetation on disturbed areas from seed. Permanent vegetation provides economical long-term erosion control and helps prevent sediment from leaving the site. This practice is used when vegetation is desired and appropriate to permanently stabilize the soil.

Planning Considerations

The advantages of seeding over other means of establishing plants include the smaller initial cost, lower labor input, and greater flexibility of method.

Disadvantages of seeding include potential for erosion during the establishment stage, seasonal limitations on suitable seeding dates, and weather-related problems such as droughts.

The probability of successful plant establishment can be maximized through good planning. The selection of plants for permanent vegetation must be site specific. Factors that should be considered are type of soils, climate, establishment rate, and management requirements of the vegetation. Other factors that may be important are wear, mowing tolerance, and salt tolerance of vegetation.

Plant selection for permanent vegetation should be based on plant characteristics, site and soil conditions, time of year of planting, method of planting, and the intended use of the vegetated area. Climate factors can vary widely in Alabama. Important plant attributes are discussed in Vegetation Establishment for Erosion and Sediment Control in Chapter 2.

Plant selection may include companion plants to provide quick cover on difficult sites, late seedings, or where the desired permanent cover may be slow to establish. Annuals are usually used for companion plants and should be selected carefully to prevent using a species that provide so much competition that it prevents the establishment of the desired species.

Seeding properly carried out within the optimum dates has a higher probability of success. It is also possible to have satisfactory establishment when seeding outside these dates. However, as plantings are deviated from the optimum dates, the probability of failure increases rapidly. Seeding dates should be taken into account in scheduling land-disturbing activities.

Site quality impacts both short-term and long-term plant success. Sites that have compacted soils, soils that are shallow to rock or have textures that are too clayey or too sandy should be modified whenever practical to improve the potential for plant growth and long-term cover success.

The operation of equipment is restricted on slopes steeper than 3:1, severely limiting the quality of the seedbed that can be prepared. Provisions for establishment of vegetation on steep slopes can be made during final grading. In construction of fill slopes, for example, the last 4-6” might not be compacted. A loose, rough seedbed with irregularities that hold seeds and lime and fertilizer is essential for hydroseeding. Cut slopes should be roughened (see Land Grading practice).

Proper mulching is critical to protect against erosion on steep slopes. When using straw, anchor with netting or asphalt. On slopes steeper than 2:1, jute, excelsior, or synthetic matting may be required.

The use of irrigation (temporary or permanent) will greatly improve the success of vegetation establishment.

Design Criteria

Plant Selection

Select plants that can be expected to meet planting objectives. To simplify plant selection, use Figure PS-1 Geographical Areas for Species Adaptation and Seeding Dates and Table PS-1, Commonly Used Plants for Permanent Cover. Mixtures commonly specified by the Alabama Department of Transportation are an appropriate alternative for plantings on rights-of-ways. Additional information related to plantings in Alabama is found in Chapter 2 under the section Vegetation for Erosion and Sediment Control.

The plants used for temporary vegetation may be used for companion plants provided the seeding rate is reduced by one half. See the Temporary Seeding practice for additional information on establishing temporary vegetation. **Ryegrass or other highly competitive plants should not be used as a companion plant**.

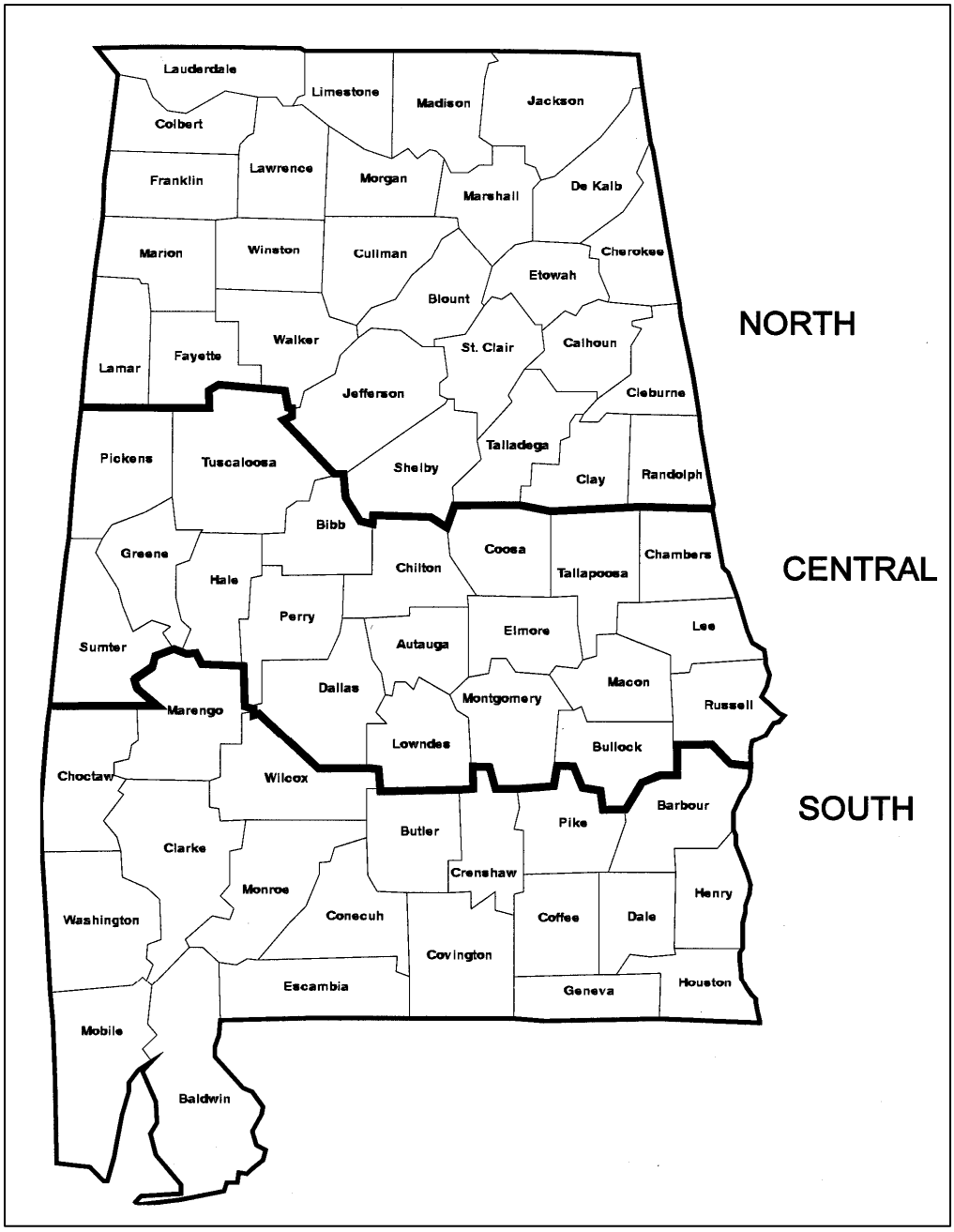

Figure PS-1 Geographical Areas for Species Adaptation and Seeding Dates

Table PS-1 Commonly Used Plants for Permanent Cover with Seeding Rates and Dates

Species	Seeding Rates/Ac PLS	North	Central	South
			Seeding Dates	
Bahiagrass, Pensacola	40 lbs	--	Mar 1-July 1	Feb 1-Nov 1
Bermudagrass, Common	10 lbs	Apr 1-July 1	Mar 15-July 15	Mar 1-July 15
Bahiagrass, Pensacola Bermudagrass, Common	30 lbs 5 lbs	--	Mar 1-July 1	Mar 1-July 15
Bermudagrass, Hybrid (Lawn Types)	Solid Sod	Anytime	Anytime	Anytime
Bermudagrass, Hybrid (Lawn Types)	Sprigs 1/sq ft	Mar 1-Aug 1	Mar 1-Aug 1	Feb 15-Sep 1
Fescue, Tall	40-50 lbs	Sep 1-Nov 1	Sep 1-Nov 1	--
Sericea	40-60 lbs	Mar 15-July 15	Mar 1-July 15	Feb 15-July 15
Sericea & Common Bermudagrass	40-60 lbs 10 lbs	Mar 15-July 15	Mar 1-July 15	Feb 15-July 15
Switchgrass, Alamo	4 Lbs	Apr 1-Jun 15	Mar 15-Jun 15	Mar 15-Jun15

PLS means pure live seed and is used to adjust seeding rates. For example, to plant 10 lbs PLS of a species with germination of 80% and 10% inert material, 10 lbs PLS = 10 lbs/ % live seed = 10/ 0.70 = 14.3 lbs.

Seedbed Requirements

Establishment of vegetation should not be attempted on sites that are unsuitable due to compaction or inappropriate soil texture, poor drainage, concentrated overland flow, or steepness of slope until measures have been completed to correct these problems. To maintain a good stand of vegetation, the soil must meet certain minimum requirements as a growth medium. A good growth medium should have these attributes:

- Sufficient pore space to permit root penetration.
- Enough fine-grained soil material (silt and clay) to maintain adequate moisture and nutrient supply.
- Sufficient depth of soil to provide an adequate root zone. The depth to rock or impermeable layers such as hardpans should be 12” or more, except on slopes steeper than 2:1 where topsoiling is not feasible.
- A favorable pH range for plant growth, usually 6.0-6.5.

- Sufficient nutrients (nitrogen, phosphorus and potassium) for initial plant establishment.

- Freedom from large roots, branches, stones, or large clods. Clods and stones may be left on slopes steeper than 3:1 if they are to be hydroseeded.

If any of the above attributes are not met: i.e., if the existing soil is too dense, coarse, shallow or acidic to foster vegetation – chiseling, topsoil, or special amendments should be used to improve soil conditions. The soil conditioners described below may be beneficial or topsoil may be applied (for guidance on topsoiling see Topsoiling practice). These amendments should only be necessary where soils have limitations that make them poor for plant growth or for turf establishment.

- Peat-appropriate types are sphagnum moss peat, reed-sedge peat, or peat humus, all from fresh-water sources. Peat should be shredded and conditioned in storage piles for at least 6 months after excavation.

- Sand-should be clean and free of toxic materials.

- Vermiculite-use horticultural grade.

- Rotted manure-use stable or cattle manure not containing undue amounts of straw or other bedding materials.

- Thoroughly rotted sawdust-should be free of stones and debris. Add 6 lbs of nitrogen to each cubic yard.

Soil Amendments

Liming Materials

Lime (Agricultural limestone) should have a neutralizing value of not less than 90 percent calcium carbonate equivalent and 90 percent will pass through a 10 mesh sieve and 50 percent will pass through a 60 mesh sieve.

Selma chalk should have a neutralizing value of not less than 80 percent calcium carbonate equivalent and 90 percent will pass through a 10 mesh sieve.

Other liming materials that may be selected should be provided in amounts that provide equal value to the criteria listed for agricultural lime or be used in combination with agricultural limestone or Selma chalk to provide equivalent values to agricultural limestone.

Plant Nutrients

Commercial grade fertilizers that comply with current Alabama Fertilizer Laws should be used to supply nutrients required to establish vegetation.

Rates of Soil Amendments

Lime and fertilizer needs should be determined by soil tests. Soil testing is performed by the Auburn University Soil Testing Laboratory and provides recommendations based on field tests on Alabama soils. The local county

Cooperative Extension Service can provide information on obtaining soil tests. Commercial laboratories that make recommendations based on soil analysis may be used.

When soil tests are not available, use the following rates for application of soil amendments.

Lime (Agricultural Limestone or Equivalent – see Liming Materials)
Sandy soils: Use 1 ton/acre (exception on sandy soils – if the cover will be tall fescue and clover) use 2 tons/acre.
Clayey soils: 2 tons/acre.
(Do not apply lime to alkaline soils).

Fertilizer
Grasses alone: Use 400 lbs/acre of 8-24-24 or the equivalent. Apply 30 lbs of additional nitrogen when grass has emerged and begun growth (approximately 0.8lbs/1000 ft^2).
Grass-legume mixtures: Use 800 to 1200 lbs/acre of 5-10-10 or the equivalent.
Legumes Alone: Use 800 to 1200 lbs/acre of 0-10-10 or the equivalent.

Note: Fertilizer can be blended to meet exact fertilizer recommendations. Take soil test recommendations to local fertilizer dealer for bulk fertilizer blends. This may be more economical than bagged fertilizer.

Application of Soil Amendments

Apply lime and fertilizer evenly and incorporate into the top 6” of soil by disking, chiseling or other suitable means during seedbed preparation. Operate machinery on the contour.

Seedbed Preparation

If needed, grade and shape to provide a surface on which equipment can safely and efficiently be used for seedbed preparation and seeding.

Install necessary sediment control practices before seedbed preparation and complete grading according to the approved plan.

Prepare a friable seedbed with tillage to a depth of at least 6”. Break up large clods, alleviate compaction, and smooth and firm the soil into a uniform surface. Fill in or level depressions that can collect water.

Planting Methods

Seeding

Use certified seed for permanent seeding whenever possible. Certified seed is inspected by the Alabama Crop Improvement Association to meet high quality standards and will be tagged with a "Certified Seed" tag. (Note: all seed sold in Alabama is required by law to be tagged to identify seed purity, germination, and presence of weed seeds. Seed must meet state standards for content of noxious weeds.)

Seeding dates are determined using Figure PS-1 and Table PS-1.

Inoculate legume seed with the Rhizobium bacteria appropriate to the species of legume. Details of legume inoculation are located in Chapter 2 in the part on Vegetation for Erosion and Sediment Control under Inoculation of Legumes.

Plant seed uniformly with a cyclone seeder, a drill seeder, a cultipacker seeder, or by hand on a fresh, firm, friable seedbed. If the seedbed has been sealed by rainfall, it should be disked so the seed will be sown into a freshly prepared seedbed.

When using broadcast-seeding methods, subdivide the area into workable sections and determine the amount of seed needed for each section. Apply one-half the seed while moving back and forth across the area, making a uniform pattern; then apply the second half in the same way, but moving at right angles to the first pass.

Cover broadcast seed by raking or chain dragging; then firm the surface with a roller or cultipacker to provide good seed contact. Small grains should be planted no more than 1" deep and grasses and legume seed no more than ½" deep.

Hydroseeding

Surface roughening is particularly important when hydroseeding, as a roughened slope will provide some natural coverage for lime, fertilizer, and seed. The surface should not be compacted or smooth. Fine seedbed preparation is not necessary for hydroseeding operations; large clods, stones, and irregularities provide cavities in which seeds can lodge.

Mix seed, inoculant if required, and a seed carrier with water and apply as a slurry uniformly over the area to be treated. The seed carrier should be a cellulose fiber, natural wood fiber or other approved fiber mulch material which is dyed an appropriate color to facilitate uniform application of seed. Use the correct legume inoculant at 4 times the recommended rate when adding inoculant to a hydroseeder slurry. The mixture should be applied within one hour after mixing to reduce damage to seed.

Fertilizer should not be mixed with the seed-inoculant mixture because fertilizer salts may damage seed and reduce germination and seedling vigor.

Fertilizer may be applied with a hydroseeder as a separate operation after seedlings are established.

Lime is not normally applied with a hydraulic seeder because it is abrasive but if necessary it can be added to the seed slurry and applied at seeding or it may be applied with the fertilizer mixture. Also lime can be blown onto steeper slopes in dry form.

Sprigging

Hybrid bermudagrass cannot be grown from seed and must be planted vegetatively. Vegetative methods of establishing common and hybrid bermudagrass, centipedegrass and zoysia include sodding, plugging and sprigging (see Sodding practice).

When sprigs are planted with a sprigging machine, furrows should be 4-6" deep and 2 feet apart. Place sprigs no farther than 2 feet apart in the row and so that at least one rooting node is in the furrow.

When broadcasting is used for sprig planting, broadcast sprigs at the specified rate (Table PS-1). Press into the top ½" to 2" of soil with a cultipacker or with a disk set nearly straight so that the sprigs are not brought back to the surface. A mulch tacking machine may be used to press sprigs into the soil.

Mulching

The use of mulch provides instant cover and helps ensure establishment of vegetation under normal conditions and is essential to seeding success under harsh site conditions (see Mulching practice). Harsh site conditions include: slopes steeper than 3:1 and adverse soils (shallow, rocky, or high in clay or sand). Areas with concentrated flow should be treated differently and require sod, a hydromulch formulated for channels or an appropriate erosion control blanket.

Irrigation

Moisture is essential for seed germination and vegetation establishment. Supplemental irrigation can be very helpful in assuring adequate stands in dry seasons or to speed development of full cover. It is a requirement for establishment of vegetation from sod and sprigs and should be used elsewhere when feasible. However, irrigation is rarely critical for low-maintenance vegetation planted at the appropriate time of the year.

Water application rates must be carefully controlled to prevent runoff. Inadequate or excessive amounts of water can be more harmful than no supplemental water.

Maintenance

Generally, a stand of vegetation cannot be determined to be fully established until soil cover has been maintained for 1 full year from planting. Inspect vegetated areas for failure and make necessary repairs and vegetate as soon as possible.

If a stand has inadequate cover, reevaluate choice of plant materials and quantities of lime and fertilizer. Re-establish the stand after seedbed

preparation or over-seed the stand. Consider a temporary seeding if the time of year is not appropriate for establishment of permanent vegetation (see Temporary Seeding practice).

If vegetation fails to grow, soil must be tested to determine if acidity or nutrient imbalance is responsible.

To attain complete establishment, fertilization is usually required in the second growing season. Turf grasses require annual maintenance fertilization. Use soil tests if possible or follow the guidelines given for the specific seeding mixtures.

Protect vegetation during its establishing period from traffic that will be harmful. If appropriate, use either temporary fences or barriers to protect areas that may be damaged by excessive traffic.

D. Temporary Seeding (TS)

Temporary Seeding (TS)

Practice Description

Temporary seeding is the establishment of fast-growing annual vegetation from seed on disturbed areas. Temporary vegetation provides economical erosion control for up to a year and reduces the amount of sediment moving off the site.

This practice applies where short-lived vegetation can be established before final grading or in a season not suitable for planting the desired permanent species. It helps prevent costly maintenance operations on other practices such as sediment basins and sediment barriers. In addition, it reduces problems of mud and dust production from bare soil surfaces during construction. Temporary or permanent seeding is necessary to protect earthen structures such as dikes, diversions, grass-lined channels and the banks and dams of sediment basins.

Planning Considerations

Temporary vegetative cover can provide significant short-term erosion and sediment reduction before establishing perennial vegetation.

Temporary vegetation will reduce the amount of maintenance associated with sediment basins.

Temporary vegetation is used to provide cover for no more than 1 year. Permanent vegetation should be established at the proper planting time for permanent vegetative cover.

Certain plants species used for temporary vegetation will produce large quantities of residue which can provide mulch for establishment of the permanent vegetation.

Proper seedbed preparation and selection of appropriate species are important with this practice. Failure to follow establishment guidelines and recommendations carefully may result in an inadequate or short-lived stand of vegetation that will not control erosion.

The selection of plants for temporary vegetation must be site specific. Factors that should be considered are type of soils, climate, establishment rate, and management requirements of the vegetation. Other factors that may be important are wear, mowing tolerance, and salt tolerance of vegetation.

Seeding properly carried out within the optimum dates has a higher probability of success. It is also possible to have satisfactory establishment when seeding outside these dates. However, as plantings are deviated from the optimum dates, the probability of failure increases rapidly. Seeding dates should be taken into account in scheduling land-disturbing activities.

Site quality impacts both short-term and long-term plant success. Sites that have compacted soils should be modified whenever practical to improve the potential for plant growth.

The operation of equipment is restricted on slopes steeper than 3:1, severely limiting the quality of the seedbed that can be prepared. Provisions for establishment of vegetation on steep slopes can be made during final grading. In construction of fill slopes, for example, the last 4-6” might not be compacted. A loose, rough seedbed with irregularities that hold seeds and fertilizer is essential for hydroseeding. Cut slopes should be roughened (see practice Land Grading).

Good mulching practices are critical to protect against erosion on steep slopes. When using straw, anchor with netting or asphalt. On slopes steeper than 2:1, jute, excelsior, or synthetic matting may be required to protect the slope.

The use of irrigation (temporary or permanent) will greatly improve the success of vegetation establishment.

Design Criteria

Plant Selection

Select plants that can be expected to meet planting objectives. To simplify plant selection, use Table TS-1, Commonly Used Plants for Temporary Cover and Figure TS-1, Geographical Areas for Species Adaptation and Seeding Dates. Seeding mixtures commonly specified by the Alabama Department of Transportation are an appropriate alternative for plantings on rights-of-ways. Additional information related to plantings in Alabama is found in Chapter 2 in the section Non-woody Vegetation for Erosion and Sediment Control.

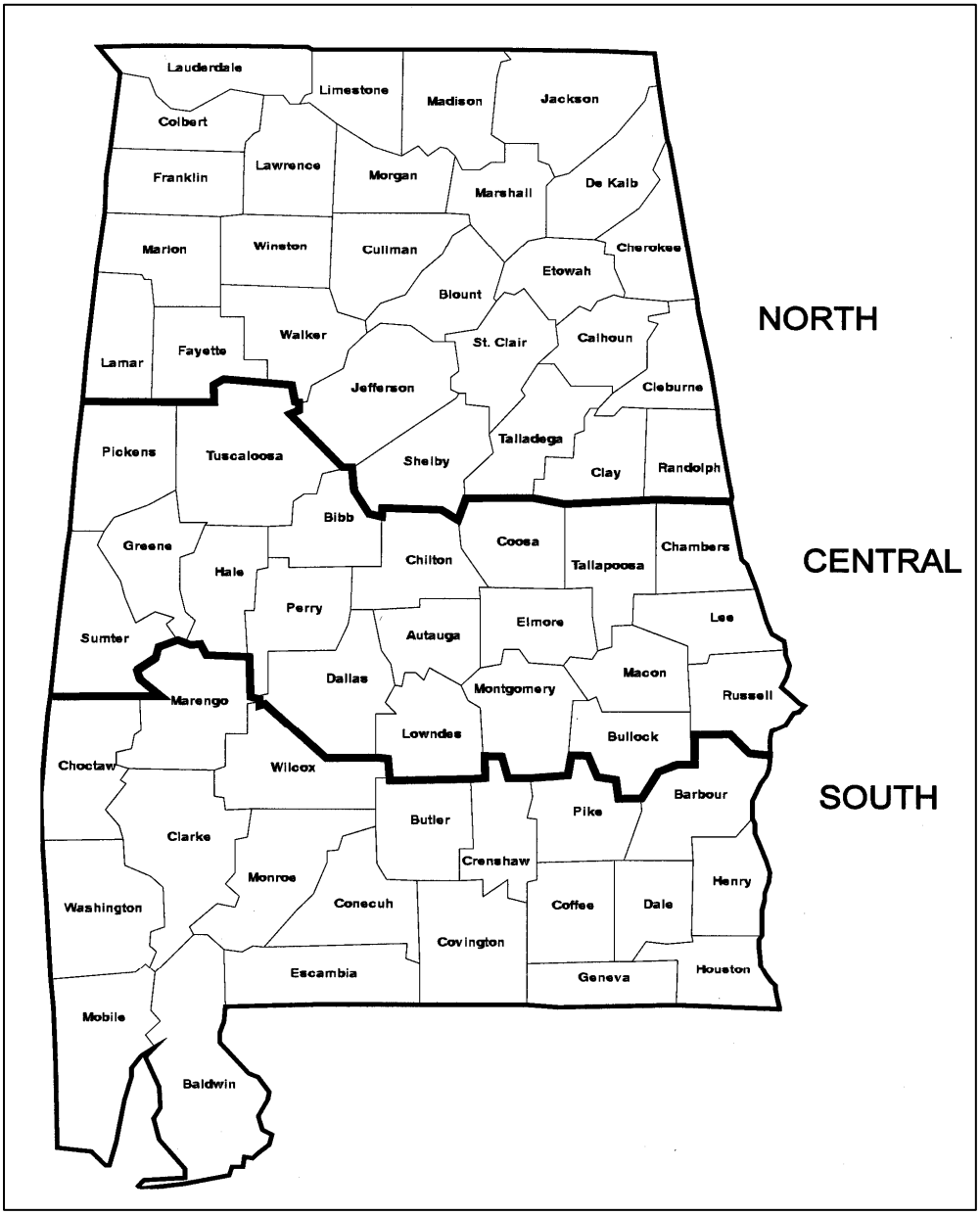

Figure TS-1 Geographical Areas for Species Adaptation and Seeding Dates

Table TS-I Commonly Used Plants for Temporary Cover

Species	Seeding Rate/AC PLS	North	Central	South
			Seeding Dates	
Millet, Browntop or German	40 lbs	May1-Aug 1	Apr1- Aug 15	Apr 1-Aug 15
Rye	3 bu	Sep I-Nov 15	Sep 15-Nov 15	Sep 15-Nov 15
Ryegrass	30 lbs	Aug I-Sep 15	Sep I-Oct 15	Sep 1-Oct 15
Sorghum-Sudan Hybrids	40 lbs	May I-Aug 1	Apr 15-Aug 1	Apr I-Aug 15
Sudangrass	40 lbs	May I-Aug I	Apr 15-Aug	Apr I-Aug 15
Wheat	3 bu	Sep I-Nov 1	Sep 15-Nov 15	Sep 15-Nov 15
Common Bermudagrass	10 lbs	Apr 1-July 1	Mar 15-July 15	Mar 1-July 15
Crimson Clover	10lbs	Sept 1-Nov 1	Sept 1-Nov 1	Sept 1-Nov 1

Site Preparation and Soil Amendments

Complete grading and shaping before applying soil amendments if needed to provide a surface on which equipment can safely and efficiently be used to apply soil amendments and accomplish seedbed preparation and seeding.

Lime

Apply lime according to soil test recommendations. If a soil test is not available, use 1 ton of agricultural limestone or equivalent per acre on coarse textured soils and 2 tons per acre on fine textured soils. Do not apply lime to alkaline soils or to areas which have been limed during the preceding 2 years. Other liming materials that may be selected should be provided in amounts that provide equal value to the criteria listed for agricultural lime or be used in combination with agricultural limestone or Selma chalk to provide equivalent values to agricultural limestone.

Fertilizer

Apply fertilizer according to soil test results. If a soil test is not available, apply 8-24-24 fertilizer.

When vegetation has emerged to a stand and is growing, 30 to 40 lbs/acre (approximately 0.8 lbs/1000 ft^2) of additional nitrogen fertilizer should be applied.

Note: Fertilizer can be blended to meet exact fertilizer recommendations. Take soil test recommendations to local fertilizer dealer for bulk fertilizer blends. This may be more economical than bagged fertilizer.

Application of Soil Amendments

Incorporate lime and fertilizer into the top 6” of soil during seedbed preparation.

Seedbed Preparation

Good seedbed preparation is essential to successful plant establishment. A good seedbed is well pulverized, loose, and smooth. If soils become compacted during grading, loosen them to a depth of 6” to 8” using a ripper or chisel plow.

If rainfall has caused the surface to become sealed or crusted, loosen it just prior to seeding by disking, raking, harrowing, or other suitable methods. When hydroseeding methods are used, the surface should be left with a more irregular surface of clods.

Planting Methods

Seeding

Evenly apply seed using a cyclone seeder (broadcast), drill seeder, cultipacker seeder, or hydroseeder. Broadcast seeding and hydroseeding are appropriate for steep slopes where equipment cannot operate safely. Small grains should be planted no more than 1” deep, and grasses and legumes no more than ½” deep. Seed that are broadcast must be covered by raking or chain dragging, and then lightly firmed with a roller or cultipacker.

Hydroseeding

Surface roughening is particularly important when hydroseeding, as a roughened slope will provide some natural coverage for lime, fertilizer, and seed. The surface should not be compacted or smooth. Fine seedbed preparation is not necessary for hydroseeding operations; large clods, stones, and irregularities provide cavities in which seeds can lodge.

Mix seed, inoculant if required, and a seed carrier with water and apply as slurry uniformly over the area to be treated. The seed carrier should be a cellulose fiber, natural wood fiber or other approved fiber mulch material which is dyed an appropriate color to facilitate uniform application of seed. Use the correct legume inoculant at 4 times the recommended rate when adding inoculant to hydroseeder slurry. The mixture should be applied within one hour after mixing to reduce damage to seed.

Fertilizer should not be mixed with the seed-inoculant mixture because fertilizer salts may damage seed and reduce germination and seedling vigor. Fertilizer may be applied with a hydro seeder as a separate operation after seedlings are established.

Mulching

The use of an appropriate mulch provides instant cover and helps ensure establishment of vegetative cover under normal conditions and is essential to seeding success under harsh site conditions (see the Mulching practice for guidance). Harsh site conditions include the following: slopes steeper than 3:1 and adverse soils (soils that are shallow to rock, rocky, or high in clay or sand). Areas with concentrated flow should be treated differently and require a hydromulch formulated for channels or an appropriate erosion control blanket.

E. Check Dam (CD)

Check Dam (CD)

Practice Description

A check dam is a small barrier or dam constructed across a swale, drainage ditch or other area of concentrated flow for the purpose of reducing channel erosion. Channel erosion is reduced because check dams flatten the gradient of the flow channel and slow the velocity of channel flow. Most check dams are constructed of rock, but hay bales, logs and other materials may be acceptable. Contrary to popular opinion, most check dams trap an insignificant volume of sediment.

This practice applies in small open channels and drainageways, including temporary and permanent swales. It is not to be used in a live stream. Situations of use include areas in need of protection during establishment of grass and areas that cannot receive a temporary or permanent non-erodible lining for an extended period of time.

Planning Considerations

Check dams are utilized in concentrated flow areas to provide temporary channel stabilization during the intense runoff periods associated with construction disturbances. Check dams may be constructed of rock, logs, hay bales or other suitable material, including manufactured products. Most check dams are constructed of rock. Rock may not be acceptable in some installations because of aesthetics and alternative types of check dams need to be considered.

Rock check dams (Figures CD-1 and CD-2) are usually installed with backhoes or other suitable equipment but hand labor is likely needed to complete most installations to the quality needed. The rock is usually purchased and some locations in the state may not have rock readily available. The use of rock should be considered carefully in areas to be mowed. Some rock may be washed downstream and should be removed before each mowing operation.

Log check dams (Figure CD-3) are more economical from a material cost standpoint since logs can usually be salvaged from clearing operations. The time and labor required would be greater for log check dams. Increased labor costs would offset the reduced material costs. Log check dams would not be permanent but may last long enough to get grass linings established.

Check dams constructed of hay bales (Figure CD-4) have the shortest life of the materials discussed and are only used as a temporary means to help establish a channel to vegetation. Hay bale check dams should not be used where permanent watercourse protection is needed and should only be used in concentrated flow areas where only minimal runoff occurs. **Without proper installation, which is rarely done, hay bale check dams always fail.**

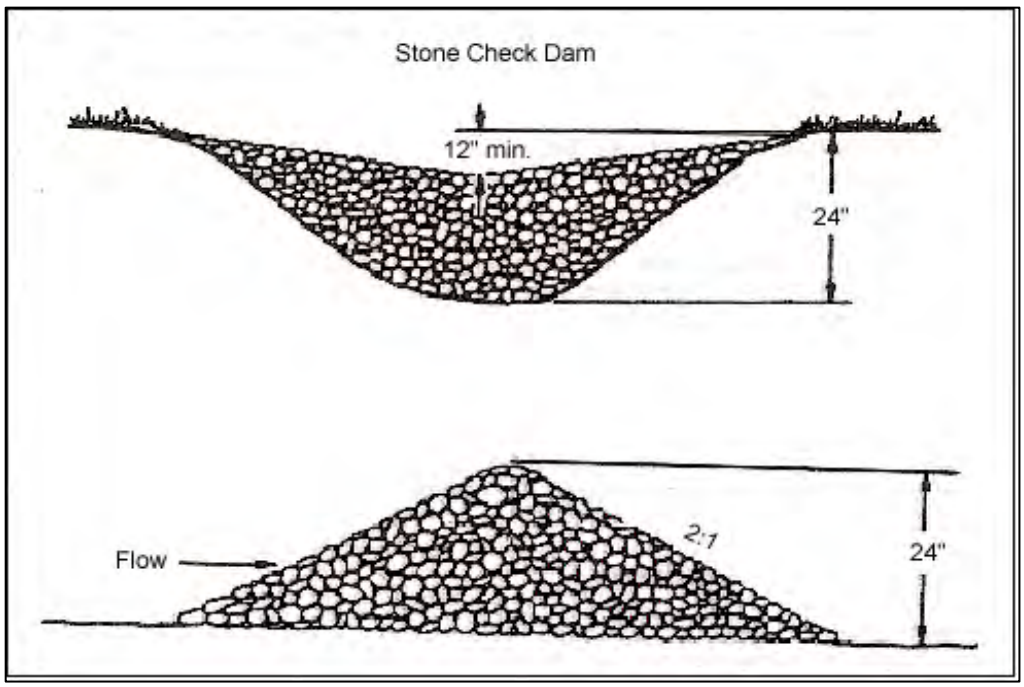

Figure CD-1 Profile of Typical Rock Check Dams

Check dams should be planned to be compatible with the other features such as streets, walks, trails, sediment basins and rights-of-way or property lines. Check dams are normally constructed in series and the dams should be located at a normal interval from other grade controls such as culverts or sediment basins.

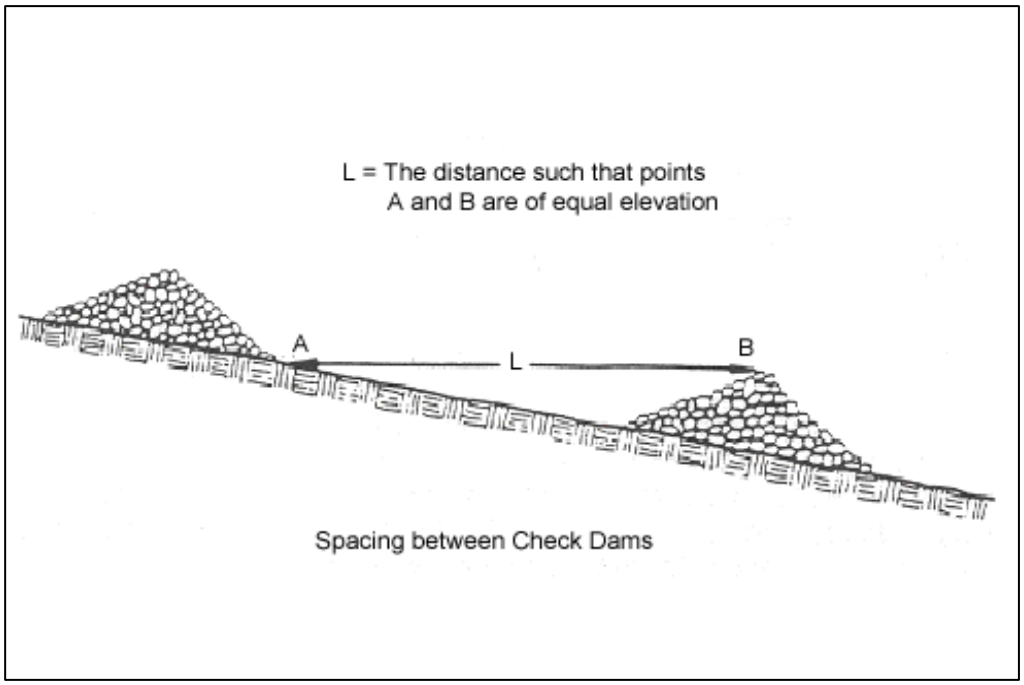

Figure CD-2 Cross Section of Typical Rock Check Dam

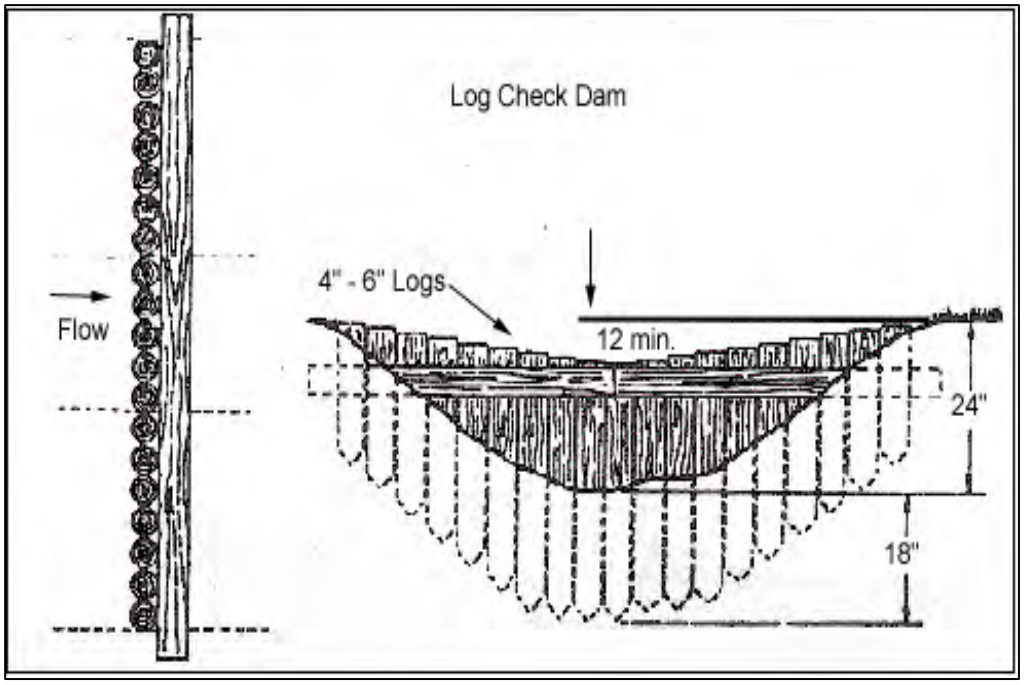

Figure CD-3 Typical Log Check Dam

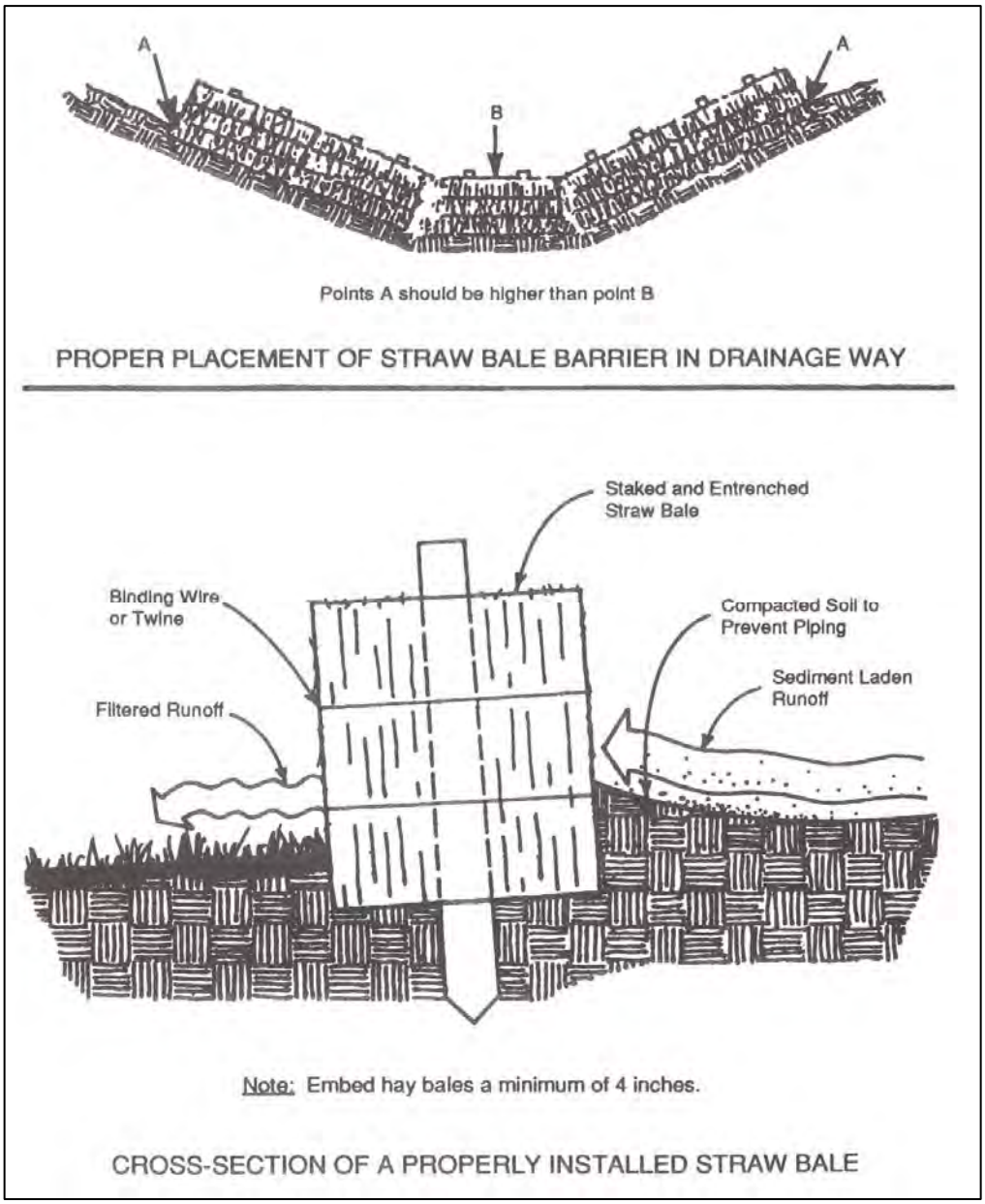

Figure CD-4 Typical Hay Bale Check Dam

Design Criteria

Formal design is not required. The following limiting factors should be adhered to when designing check dams.

Drainage Area

Ten acres or less (Rock or logs).

Maximum Height

Two feet when drainage area is less than 5 acres.

Three feet when drainage area is 5 to 10 acres.

Depth of Flow

Six inches when drainage area is less than 5 acres.

Twelve inches when drainage area is 5 to 10 acres.

The top of dam, perpendicular to flow, should be parabolic. The center of the dam should be constructed lower than the ends. The elevation of the center of the dam should be lower than the ends by the depth of flow listed above.

Side Slopes

2:1 or flatter.

Spacing

Elevation of toe of upstream dam is at or below elevation of crest of downstream dam.

Keyway

The rock or log check dam should be keyed into the channel bottom and abutments to a depth of 12 to 24”. The keyway width should be at least 12”. The keyway is to prevent erosion around the end of and beneath the dam. Hay bale check dams should be embedded into the soil at least 3”.

Rock Check Dams

Rock check dams should be constructed of durable rock riprap. Riprap gradation should conform to the requirements of Class I Riprap, Alabama Highway Department, Standard Specification for Highway Construction.

In soils where failure by piping of soils into the rock is likely, a geotextile will be used as a filter to separate the soils from the rock. Geotextile should conform to the requirements of type I geotextile in Table CD-1:

Table CD-1 Requirements for Nonwoven Geotextile

Property	Test method	Class I	Class II	Class III	Class IV [1]
Tensile strength (lb) [2]	ASTM D 4632 grab test	180 minimum	120 minimum	90 minimum	115 minimum
Elongation at failure (%) [2]	ASTM D 4632	≥ 50	≥ 50	≥ 50	≥ 50
Puncture (pounds)	ASTM D 4833	80 minimum	60 minimum	40 minimum	40 minimum
Ultraviolet light (% residual tensile strength)	ASTM D 4355 150-hr exposure	70 minimum	70 minimum	70 minimum	70 minimum
Apparent opening size (AOS)	ASTM D 4751	As specified max. no.40 [3]	As specified max. no.40 [3]	As specified max. no.40 [3]	As specified max. no.40 [3]
Permittivity sec^{-1}	ASTM D 4491	0.70 minimum	0.70 minimum	0.70 minimum	0.10 minimum

Table copied from NRCS Material Specification 592.

1 Heat-bonded or resin-bonded geotextile may be used for classes III and IV. They are particularly well suited to class IV. Needle-punched geotextile are required for all other classes.
2 Minimum average roll value (weakest principal direction).
3 U.S. standard sieve size.

F. Diversion (DV)

Diversion (DV)

Practice Description

A diversion is a watercourse constructed across a slope consisting of an excavated channel, a compacted ridge or a combination of both. Most diversions are constructed by excavating a channel and using the excavated material to construct a ridge on the downslope side of the channel. Right-of-way diversions and temporary diversions are sometimes constructed by making a ridge, often called a berm, from fill material.

This practice applies to sites where stormwater runoff can be redirected to permanently protect structures or areas downslope from erosion, sediment, and excessive wetness or localized flooding. Diversions may be used to temporarily divert stormwater runoff to protect disturbed areas and slopes or to retain sediment on-site during construction.

Perimeter protection is sometimes used to describe both permanent and temporary diversions used at either the upslope or downslope side of a construction area.

Right-of-way diversions, sometimes referred to as water bars, are used to shorten the flow length on a sloping right-of-way and reduce the erosion potential of the stormwater runoff.

Planning Considerations

Diversions are designed to intercept and carry excess water to a stable outlet.

Diversions can be useful tools for managing surface water flows and preventing soil erosion. On moderately sloping areas, they may be placed at intervals to trap and divert sheet flow before it has a chance to concentrate and cause rill and gully erosion. Simple water bars illustrate this concept (Figure DV-1).

Diversions may be placed at the top of cut or fill slopes to keep runoff from upgradient drainage areas off the slope. Diversions are also typically built at the base of steeper slopes to protect flatter developed areas which cannot withstand runoff water from outside areas. They can also be used to protect structures, parking lots, adjacent properties, and other special areas from flooding.

Diversions are preferable to other types of man-made stormwater conveyance systems because they more closely simulate natural flow patterns and characteristics. Flow velocities are generally kept to a minimum. When properly coordinated into the landscape design of a site, diversions can he visually pleasing as well as functional.

As with any earthen structure, it is very important to establish adequate vegetation as soon as possible after installation. It is usually important to stabilize the drainage area above the diversion so that sediment will not enter and accumulate in the diversion channel.

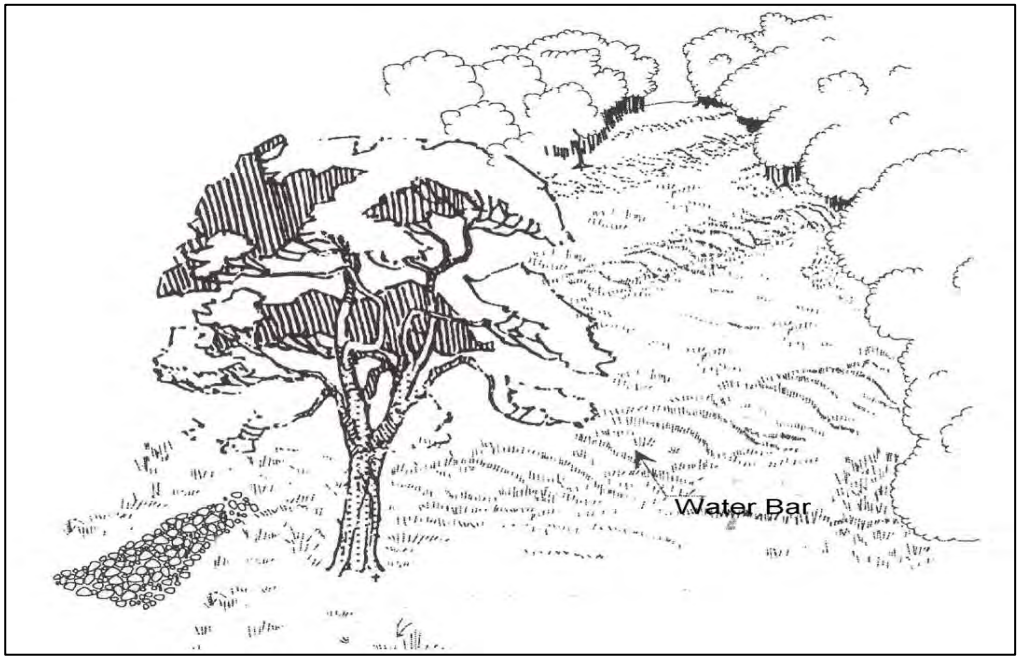

Figure DV-1 Water Bar

Design Criteria

Location

Diversion location should be determined by considering outlet conditions, topography, land use, soil type, length of slope, seepage (where seepage is a problem) and the development layout. Outlets must be stable after the diversion empties stormwater flow into it; therefore, care should be exercised in the location selection of the diversion and its outlet.

Capacity

The diversion channel must have a minimum capacity to carry the runoff expected from a storm frequency meeting the requirements of Table DV-l with a freeboard of at least 0.3 foot (Figure DV-2).

The storm frequency should be used to determine the required channel capacity, Q (peak rate of runoff). The peak rate of runoff should be determined using the Natural Resources Conservation Service runoff curve no. (RCN) method or other equivalent methods.

Table DV-1 Design Frequency

Diversion Type	Typical Area of Protection	24-Hour Design Storm Frequency
Temporary	Construction Areas	2-year
	Building Sites	5-year
Permanent	Agricultural Land	10-year
	Mined Reclamation Area	10-year
	Recreation Areas	10-year
	Isolated Buildings	25-year
	Urban areas, Residential, School, Industrial Areas, etc.	50-year

Diversions designed to protect homes, schools, industrial buildings, roads, parking lots, and comparable high-risk areas, and those designed to function in connection with other structures, should have sufficient capacity to carry peak runoff expected from a storm frequency consistent with the hazard involved.

Velocities

Diversions should be designed so that the design velocities are as high as will be safe for the planned type of protective vegetation and the expected maintenance, in order to minimize sediment deposition in the channel. Maximum permissible velocities are dependent upon the erosion resistance of the soil (Table DV-2) and the quality of the vegetation maintained.

Table DV-2 Permissible Velocities

Soil Texture	Velocity in Feet/Second		
	Conditions of Vegetation		
	Poor	Fair	Good
Sand, Silt, Sandy Loam, Silt Loam	1.5	2.0	3.0
Silty Clay Loam, Sandy Clay Loam	2.5	3.0	4.0
Clay	3.0	4.0	5.0

Channel Design

The diversion channel may be parabolic, trapezoidal or v-shaped as shown in Figure DV-2 and should be designed in accordance with the procedure shown at the end of this standard. Land slope must be considered when choosing channel dimensions. On steeper slopes, narrow and deep channels may be required. On more gentle slopes, broad, shallow channels can be used to facilitate maintenance.

Ridge Design

The supporting ridge cross section should meet the configuration and requirements of Figure DV-2.

The side slopes should be no steeper than 2:1. Side slopes should be flatter, 5:1 to 10:1, when the diversion is to be permanent with mowing and other maintenance activities performed on or around it.

The width of the ridge at the design water elevation should be a minimum of 4 feet. The minimum freeboard should be 0.3 foot.

The design should include a 10% settlement factor.

Outlet

Diversions should have adequate outlets which will convey concentrated runoff without erosion. Acceptable outlets include practices such as Grassed Swale, Lined Swale, Drop Structure, Sediment Basin, and Stormwater Detention Basins.

Stabilization

Unless otherwise stabilized, the ridge and channel should be seeded within 13 days of installation in accordance with the applicable seeding practice, Permanent Seeding or Temporary Seeding.

Disturbed areas draining into the diversion should be seeded and mulched prior to or at the time the diversion is constructed in accordance with the Permanent Seeding or Temporary Seeding (whichever is applicable) practices.

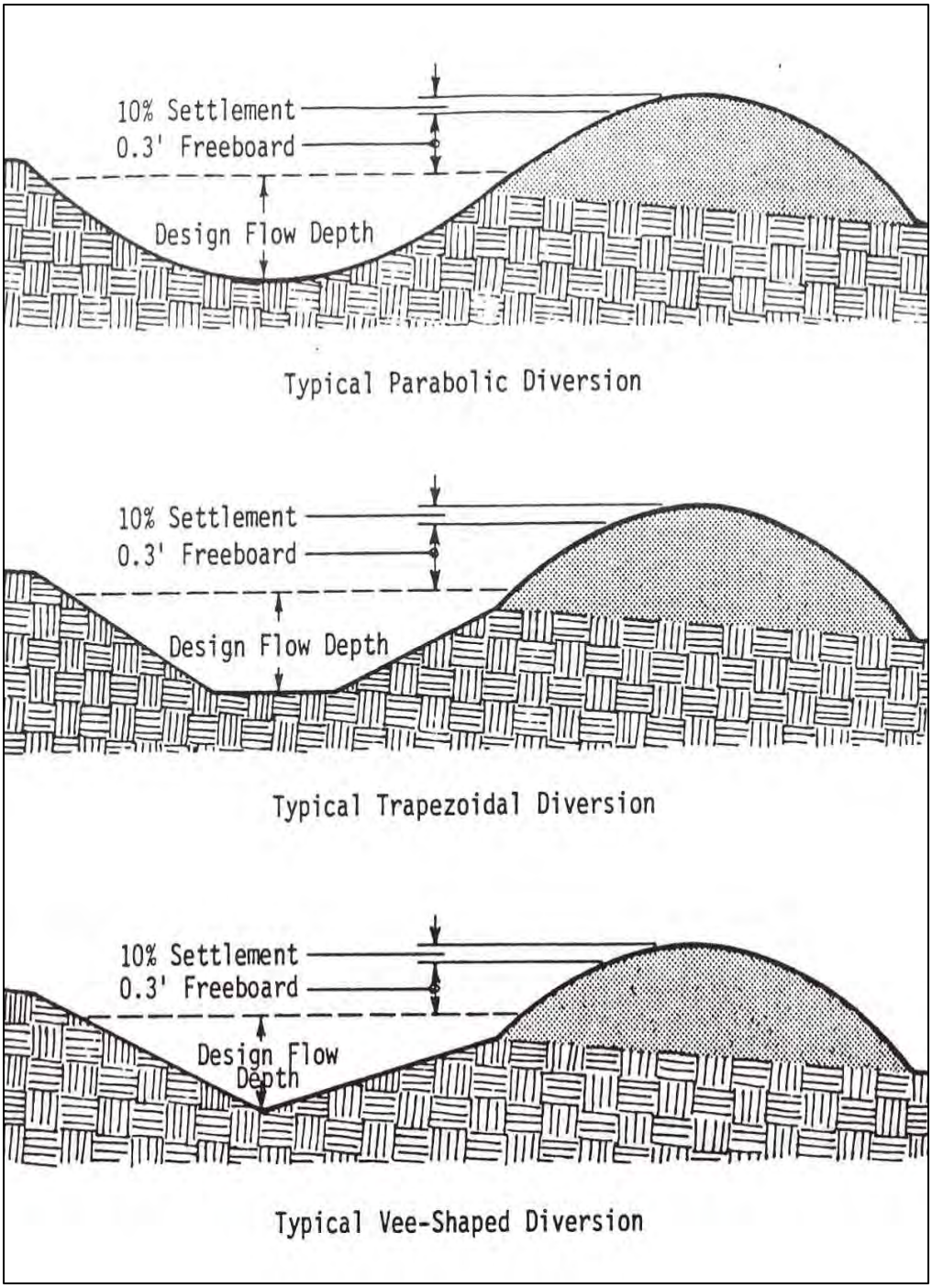

Figure DV-2 Typical Diversions Detail

Diversion Design

Table DV-l through DV-16 may be used to facilitate the design of grass-lined diversions with parabolic cross sections. These tables are based on a retardance of "D" (vegetation newly cut) to determine V_1 for stability considerations. To determine channel capacity, choose a retardance of "C" when proper maintenance is expected; otherwise, design channel capacity based on retardance "B". Refer to Table DV-2 for maximum permissible velocities. The permissible velocities guide the selection of V_1 and should not be exceeded. It is good practice to use a value for V_1 that is significantly less than the maximum allowable when choosing a design cross section. When velocities approach the maximum allowable, flatter grades should be evaluated or a more erosion resistant liner such as erosion control blanket or riprap should be considered. After the diversion dimensions are selected in the design tables, the top width should be increased by 4 feet. and the depth by 0.3 foot. for freeboard.

Example Problem

Given

Q: 30 cfs
Grade: 1%
Soil: Sandy clay loam Condition of vegetation expected: fair
Maintenance: low; will be cut only twice a year.
Site will allow a top width of 26 feet.

Find

Diversion top width and depth that will be stable and fit site conditions.

Solution

From Table DV-2 use maximum permissible velocity of 3.0 ft./sec.

Since maintenance will be low use "B" retardance for capacity.

From Table DV-4 use retardance "D" and "B";
Grade 1.00 Percent Top width = 21.0 feet + 4 feet = 25.0 feet.

Depth = 1.6 feet + 0.3 foot = 1.9 feet.

V_2 = 1.3 ft./sec.

Note: V_1 < 3.0 ft./sec.; Top width < 26 feet, design O.K.

Note: It is good practice to select a cross section that will give a velocity, V_1, well below the maximum allowable whenever site conditions permit. Wide, shallow cross sections are more stable and require less maintenance. It is always prudent to evaluate flatter design grades in order to best fit diversions to the site and keep velocities well below maximum allowable.

Table DV-3 Parabolic Diversion Design Chart (Retardance "D" and "B", Grade 0.50%)

V1 FOR RETARDANCE "D", TOP WIDTH (T), DEPTH (D), AND V2 FOR RETARDANCE "B"

Grade 0.50 Percent

Q CFS	V1=2.0			V1=2.5			V1=3.0			V1=3.5			V1=4.0			V1=4.5			V1=5.0			V1=5.5			V1=6.0		
	T	D	V2	T	D	V2	T	D	V2	T	D	V2	T	D	V2	T	D	V2	T	D	V2	T	D	V2	T	D	V2
5																											
10																											
15	10.0	2.2	1.0																								
20	13.7	2.1	1.0	8.4	2.7	1.3																					
25	17.4	2.1	1.0	11.3	2.4	1.4																					
30	21.0	2.0	1.0	13.9	2.3	1.4																					
35	24.6	2.0	1.1	16.4	2.3	1.4	10.7	2.8	1.8																		
40	28.5	2.0	1.0	18.9	2.3	1.4	12.6	2.7	1.8																		
45	31.9	2.0	1.1	21.4	2.3	1.4	14.4	2.6	1.8																		
50	35.5	2.0	1.1	23.9	2.2	1.4	16.2	2.5	1.8	9.9	3.4	2.2															
55	39.0	2.0	1.1	26.3	2.2	1.4	17.9	2.5	1.8	11.9	3.1	2.3															
60	42.5	2.0	1.1	28.8	2.2	1.4	19.7	2.5	1.8	13.2	3.0	2.3															
65	46.1	2.0	1.1	31.6	2.2	1.4	21.4	2.5	1.8	14.5	2.9	2.3															
70	49.6	2.0	1.1	34.0	2.2	1.4	23.1	2.5	1.8	15.8	2.9	2.3	11.0	3.6	2.6												
75	53.1	2.0	1.1	36.4	2.2	1.4	24.9	2.5	1.8	17.1	2.8	2.3	12.7	3.4	2.7												
80	56.6	2.0	1.1	38.8	2.2	1.4	26.6	2.5	1.8	18.4	2.8	2.3	13.7	3.3	2.7												
85	60.2	2.0	1.1	41.2	2.2	1.4	28.3	2.5	1.8	19.7	2.8	2.3	14.8	3.2	2.7												
90	63.7	2.0	1.1	43.6	2.2	1.4	30.0	2.4	1.8	20.9	2.8	2.3	15.9	3.2	2.7												
95	67.2	2.0	1.1	46.1	2.2	1.4	31.7	2.4	1.8	22.1	2.8	2.3	16.9	3.1	2.7												
100	70.8	2.0	1.1	48.5	2.2	1.4	33.7	2.4	1.8	23.4	2.8	2.3	17.9	3.1	2.7	12.3	3.9	3.1									
105	74.3	2.0	1.1	50.9	2.2	1.4	35.4	2.4	1.8	24.5	2.7	2.4	18.9	3.1	2.7	13.7	3.7	3.1									
110	77.8	2.0	1.1	53.3	2.2	1.4	37.1	2.4	1.8	25.8	2.7	2.4	19.9	3.1	2.7	14.6	3.6	3.1									
115	81.4	2.0	1.1	55.7	2.2	1.4	38.7	2.4	1.8	27.0	2.7	2.4	20.8	3.0	2.7	15.4	3.6	3.1									
120	84.9	2.0	1.1	58.1	2.2	1.4	40.4	2.4	1.9	28.2	2.7	2.4	21.8	3.0	2.7	16.3	3.5	3.1									
125	88.4	2.0	1.1	60.6	2.2	1.4	42.1	2.4	1.9	29.4	2.7	2.4	22.8	3.0	2.7	17.1	3.5	3.1									
130	92.0	2.0	1.1	63.0	2.2	1.4	43.8	2.4	1.9	30.6	2.7	2.4	23.8	3.0	2.7	17.9	3.5	3.1									
135	95.5	2.0	1.1	65.4	2.2	1.4	45.4	2.4	1.9	31.8	2.7	2.4	24.8	3.0	2.7	18.7	3.4	3.2									
140	99.0	2.0	1.1	67.8	2.2	1.4	47.1	2.4	1.9	33.1	2.7	2.4	25.7	3.0	2.8	19.4	3.4	3.2									
145	102.6	2.0	1.1	70.2	2.2	1.4	48.8	2.4	1.9	34.3	2.7	2.4	26.7	3.0	2.8	20.2	3.4	3.2	13.5	4.4	3.6						
150	106.1	2.0	1.1	72.6	2.2	1.4	50.5	2.4	1.9	35.5	2.7	2.4	27.7	3.0	2.8	21.0	3.4	3.2	14.4	4.3	3.6						

RETARDANCE "D" AND "B"

NOTE: Width and Depth dimensions are in feet; Velocity measurements are in feet per second;
Depth "D" does not include allowance for freeboard or settlement.

Table DV-4 Parabolic Diversion Design Char (Retardance "D" and "B", Grade 1.00%)

V1 FOR RETARDANCE "D", TOP WIDTH (T), DEPTH (D), AND V2 FOR RETARDANCE "B"

Grade 1.00 Percent

Q CFS	V1=2.0			V1=2.5			V1=3.0			V1=3.5			V1=4.0			V1=4.5			V1=5.0			V1=5.5			V1=6.0		
	T	D	V2	T	D	V2	T	D	V2	T	D	V2	T	D	V2	T	D	V2	T	D	V2	T	D	V2	T	D	V2
5																											
10	9.7	1.6	1.0	6.2	2.0	1.2																					
15	14.8	1.5	1.0	10.2	1.7	1.3	6.5	2.2	1.5																		
20	20.2	1.5	1.0	13.8	1.7	1.3	9.6	1.9	1.6																		
25	25.1	1.5	1.0	17.4	1.7	1.3	12.2	1.9	1.6	8.5	2.2	2.0															
30	30.1	1.5	1.0	21.0	1.6	1.3	14.9	1.8	1.7	10.6	2.1	2.1															
35	35.1	1.5	1.0	24.7	1.6	1.3	17.5	1.8	1.7	12.6	2.0	2.1	8.9	2.4	2.5												
40	40.1	1.5	1.0	28.2	1.6	1.3	20.0	1.8	1.7	14.5	2.0	2.1	10.5	2.3	2.5												
45	45.1	1.5	1.0	31.7	1.6	1.3	22.5	1.8	1.7	16.4	2.0	2.1	12.1	2.2	2.5	8.2	2.8	2.9									
50	50.2	1.5	1.0	35.2	1.6	1.3	25.4	1.8	1.7	18.3	2.0	2.1	13.6	2.2	2.5	10.0	2.6	2.9									
55	55.2	1.5	1.0	38.8	1.6	1.3	27.9	1.8	1.7	20.3	1.9	2.1	15.1	2.2	2.5	11.2	2.5	3.0									
60	60.2	1.5	1.0	42.3	1.6	1.3	30.4	1.8	1.7	22.2	1.9	2.1	16.6	2.1	2.5	12.4	2.4	3.0									
65	65.2	1.5	1.0	45.8	1.6	1.3	32.9	1.8	1.7	24.0	1.9	2.1	18.0	2.1	2.5	13.6	2.4	3.0	8.9	3.1	3.5						
70	70.2	1.5	1.0	49.3	1.6	1.3	35.5	1.8	1.7	25.9	1.9	2.1	19.5	2.1	2.6	14.8	2.4	3.0	10.6	2.8	3.5						
75	75.2	1.5	1.0	52.8	1.6	1.3	38.0	1.8	1.7	28.2	1.9	2.1	20.9	2.1	2.6	16.0	2.3	3.0	11.5	2.8	3.5						
80	80.2	1.5	1.0	56.3	1.6	1.3	40.5	1.8	1.7	30.0	1.9	2.1	22.3	2.1	2.6	17.1	2.3	3.0	12.5	2.7	3.5						
85	85.2	1.5	1.0	59.8	1.6	1.3	43.0	1.8	1.7	31.9	1.9	2.1	23.7	2.1	2.6	18.3	2.3	3.0	13.5	2.7	3.6	9.8	3.3	3.9			
90	90.2	1.5	1.0	63.3	1.6	1.3	45.6	1.8	1.7	33.6	1.9	2.1	25.2	2.1	2.6	19.4	2.3	3.1	14.4	2.6	3.6	10.9	3.1	3.9			
95	95.2	1.5	1.0	66.9	1.6	1.3	48.1	1.8	1.7	35.5	1.9	2.1	26.6	2.1	2.6	20.5	2.3	3.1	15.3	2.6	3.6	12.0	3.0	3.9			
100	100.2	1.5	1.0	70.4	1.6	1.3	50.6	1.8	1.7	37.4	1.9	2.1	28.0	2.1	2.6	21.6	2.3	3.1	16.2	2.6	3.6	12.9	2.9	4.0			
105	105.3	1.5	1.0	73.9	1.6	1.3	53.1	1.8	1.7	39.2	1.9	2.1	29.8	2.1	2.6	22.8	2.3	3.1	17.1	2.6	3.6	13.7	2.9	4.0	10.8	3.4	4.3
110	110.3	1.5	1.0	77.4	1.6	1.3	55.7	1.8	1.7	41.1	1.9	2.1	31.3	2.1	2.6	23.9	2.3	3.1	18.0	2.6	3.6	14.4	2.9	4.0	12.0	3.2	4.3
115	115.3	1.5	1.0	80.9	1.6	1.3	58.2	1.8	1.7	42.9	1.9	2.1	32.7	2.1	2.6	25.0	2.3	3.1	18.9	2.5	3.6	15.2	2.8	4.0	12.7	3.2	4.3
120	120.3	1.5	1.0	84.4	1.6	1.3	60.7	1.8	1.7	44.8	1.9	2.1	34.1	2.1	2.6	26.1	2.2	3.1	19.7	2.5	3.6	16.0	2.8	4.0	13.4	3.1	4.3
125	125.3	1.5	1.0	88.0	1.6	1.3	63.2	1.8	1.7	46.7	1.9	2.1	35.5	2.1	2.6	27.2	2.2	3.1	20.6	2.5	3.6	16.8	2.8	4.0	14.1	3.1	4.3
130	130.3	1.5	1.0	91.5	1.6	1.3	65.8	1.8	1.7	48.5	1.9	2.1	36.9	2.1	2.6	28.4	2.2	3.1	21.5	2.5	3.6	17.4	2.8	4.0	14.8	3.1	4.3
135	135.3	1.5	1.0	95.0	1.6	1.3	68.3	1.8	1.7	50.4	1.9	2.1	38.3	2.1	2.6	29.5	2.2	3.1	22.4	2.5	3.6	18.2	2.8	4.0	15.5	3.0	4.3
140	140.3	1.5	1.0	98.5	1.6	1.3	70.8	1.8	1.7	52.2	1.9	2.1	39.7	2.0	2.6	30.6	2.2	3.1	23.2	2.5	3.6	18.9	2.7	4.0	16.1	3.0	4.4
145	145.3	1.5	1.0	102.0	1.6	1.3	73.3	1.8	1.7	54.1	1.9	2.1	41.1	2.0	2.6	32.1	2.2	3.0	24.1	2.5	3.6	19.7	2.7	4.0	16.8	3.0	4.4
150	150.3	1.5	1.0	105.5	1.6	1.3	75.9	1.8	1.7	56.0	1.9	2.1	42.5	2.0	2.6	33.2	2.2	3.0	25.0	2.5	3.6	20.4	2.7	4.1	17.5	2.9	4.4

RETARDANCE "D" AND "B"

NOTE: Width and Depth dimensions are in feet; Velocity measurements are in feet per second; Depth "D" does not include allowance for freeboard or settlement.

Table DV-5 Parabolic Diversion Design Chart (Retardance "D" and "B", Grade 2.00%)

V1 FOR RETARDANCE "D", TOP WIDTH (T), DEPTH (D), AND V2 FOR RETARDANCE "B"

Grade 2.00 Percent

Q CFS	V1=2.0			V1=2.5			V1=3.0			V1=3.5			V1=4.0			V1=4.5			V1=5.0			V1=5.5			V1=6.0		
	T	D	V2	T	D	V2	T	D	V2	T	D	V2	T	D	V2	T	D	V2	T	D	V2	T	D	V2	T	D	V2
5	7.1	1.2	0.9																								
10	14.7	1.2	0.9	9.5	1.3	1.2	7.0	1.4	1.5																		
15	22.0	1.2	0.9	14.5	1.3	1.2	10.8	1.4	1.5	8.0	1.5	1.9	5.5	1.9	2.1												
20	29.3	1.2	0.9	19.6	1.2	1.2	14.6	1.3	1.5	10.9	1.5	1.9	8.1	1.6	2.3	5.5	2.1	2.6									
25	36.6	1.2	0.9	24.4	1.2	1.2	18.5	1.3	1.5	13.8	1.4	1.9	10.4	1.6	2.3	7.9	1.8	2.7									
30	43.9	1.2	0.9	29.3	1.2	1.2	22.2	1.3	1.6	16.6	1.4	1.9	12.7	1.5	2.3	9.7	1.7	2.7	7.3	2.0	3.1						
35	51.2	1.2	0.9	34.2	1.2	1.2	25.8	1.3	1.6	19.6	1.4	1.9	14.9	1.5	2.3	11.5	1.7	2.7	8.9	1.9	3.2						
40	58.5	1.2	0.9	39.0	1.2	1.2	29.5	1.3	1.6	22.4	1.4	1.9	17.1	1.5	2.3	13.3	1.6	2.8	10.4	1.8	3.2	8.0	2.1	3.6			
45	65.8	1.2	0.9	43.9	1.2	1.2	33.2	1.3	1.6	25.2	1.4	1.9	19.3	1.5	2.3	15.0	1.6	2.8	11.8	1.8	3.2	9.2	2.0	3.7			
50	73.1	1.2	0.9	48.8	1.2	1.2	36.8	1.3	1.6	28.0	1.4	1.9	21.7	1.5	2.3	16.7	1.6	2.8	13.2	1.8	3.2	10.5	1.9	3.7	7.9	2.3	4.1
55	80.4	1.2	0.9	53.6	1.2	1.2	40.5	1.3	1.6	30.7	1.4	1.9	23.9	1.5	2.3	18.5	1.6	2.8	14.6	1.7	3.2	11.7	1.9	3.7	9.2	2.2	4.1
60	87.7	1.2	0.9	58.5	1.2	1.2	44.2	1.3	1.6	33.5	1.4	1.9	26.0	1.5	2.3	20.2	1.6	2.8	16.0	1.7	3.2	12.8	1.9	3.7	10.2	2.1	4.1
65	95.0	1.2	0.9	63.4	1.2	1.2	47.9	1.3	1.6	36.3	1.4	1.9	28.2	1.5	2.3	22.1	1.6	2.8	17.4	1.7	3.3	14.0	1.9	3.7	11.3	2.1	4.2
70	102.3	1.2	0.9	68.2	1.2	1.2	51.6	1.3	1.6	39.1	1.4	1.9	30.3	1.5	2.3	23.8	1.6	2.8	18.8	1.7	3.3	15.2	1.9	3.7	12.3	2.1	4.2
75	109.6	1.2	0.9	73.1	1.2	1.2	55.2	1.3	1.6	41.9	1.4	1.9	32.5	1.5	2.3	25.5	1.6	2.8	20.1	1.7	3.3	16.2	1.8	3.7	13.2	2.0	4.2
80	116.9	1.2	0.9	78.0	1.2	1.2	58.9	1.3	1.6	44.7	1.4	1.9	34.6	1.5	2.3	27.2	1.6	2.8	21.5	1.7	3.3	17.4	1.8	3.6	14.2	2.0	4.2
85	124.2	1.2	0.9	82.9	1.2	1.2	62.6	1.3	1.6	47.4	1.4	1.9	36.8	1.5	2.3	28.9	1.6	2.8	22.9	1.7	3.3	18.5	1.8	3.6	15.1	2.0	4.2
90	131.5	1.2	0.9	87.7	1.2	1.2	66.3	1.3	1.6	50.2	1.4	1.9	39.0	1.5	2.3	30.6	1.6	2.8	24.6	1.7	3.2	19.6	1.8	3.8	16.1	2.0	4.2
95	138.8	1.2	0.9	92.6	1.2	1.2	69.9	1.3	1.6	53.0	1.4	1.9	41.1	1.5	2.3	32.3	1.6	2.8	25.9	1.7	3.3	20.6	1.8	3.8	17.0	2.0	4.2
100	146.1	1.2	0.9	97.5	1.2	1.2	73.6	1.3	1.6	55.8	1.4	1.9	43.3	1.5	2.3	34.0	1.6	2.8	27.3	1.7	3.3	21.9	1.8	3.8	18.0	2.0	4.2
105	153.4	1.2	0.9	102.3	1.2	1.2	77.3	1.3	1.6	58.6	1.4	1.9	45.4	1.5	2.3	35.7	1.6	2.8	28.6	1.7	3.3	23.0	1.8	3.8	18.9	2.0	4.2
110	160.7	1.2	0.9	107.2	1.2	1.2	81.0	1.3	1.6	61.4	1.4	1.9	47.6	1.5	2.3	37.3	1.6	2.8	30.0	1.7	3.3	24.1	1.8	3.8	19.8	2.0	4.2
115	168.0	1.2	0.9	112.1	1.2	1.2	84.7	1.3	1.6	64.2	1.4	1.9	49.8	1.5	2.3	39.0	1.6	2.8	31.3	1.7	3.3	25.3	1.8	3.8	20.8	2.0	4.2
120	175.3	1.2	0.9	117.0	1.2	1.2	88.3	1.3	1.6	67.0	1.4	1.9	51.9	1.5	2.3	40.7	1.6	2.8	32.7	1.7	3.3	26.7	1.8	3.7	21.7	2.0	4.2
125	182.6	1.2	0.9	121.8	1.2	1.2	92.0	1.3	1.6	69.7	1.4	1.9	54.1	1.5	2.3	42.4	1.6	2.8	34.1	1.7	3.3	27.8	1.8	3.7	22.6	1.9	4.3
130	189.9	1.2	0.9	126.7	1.2	1.2	95.7	1.3	1.6	72.5	1.4	1.9	56.2	1.5	2.3	44.1	1.6	2.8	35.4	1.7	3.3	28.9	1.8	3.7	23.6	1.9	4.3
135	197.3	1.2	0.9	131.6	1.2	1.2	99.4	1.3	1.6	75.3	1.4	1.9	58.4	1.5	2.3	45.8	1.6	2.8	36.8	1.7	3.3	30.0	1.8	3.7	24.5	1.9	4.3
140	204.6	1.2	0.9	136.5	1.2	1.2	103.1	1.3	1.6	78.1	1.4	1.9	60.6	1.5	2.3	47.5	1.6	2.8	38.1	1.7	3.3	31.1	1.8	3.7	25.4	1.9	4.3
145	211.9	1.2	0.9	141.3	1.2	1.2	106.7	1.3	1.6	80.9	1.4	1.9	62.7	1.5	2.3	49.2	1.6	2.8	39.5	1.7	3.3	32.3	1.8	3.7	26.4	1.9	4.3
150	219.2	1.2	0.9	146.2	1.2	1.2	110.4	1.3	1.6	83.7	1.4	1.9	64.9	1.5	2.3	50.9	1.6	2.8	40.8	1.7	3.3	33.4	1.8	3.7	27.3	1.9	4.3

RETARDANCE "D" AND "B"

NOTE: Width and Depth dimensions are in feet; Velocity measurements are in feet per second; Depth "D" does not include allowance for freeboard or settlement.

Table DV-6 Parabolic Diversion Design Chart (Retardance "D" and "B", Grade 4.00%)

V1 FOR RETARDANCE "D", TOP WIDTH (T), DEPTH (D), AND V2 FOR RETARDANCE "B"

Grade 4.00 Percent

Q CFS	V1=2.0			V1=2.5			V1=3.0			V1=3.5			V1=4.0			V1=4.5			V1=5.0			V1=5.5			V1=6.0		
	T	D	V2	T	D	V2	T	D	V2	T	D	V2	T	D	V2	T	D	V2	T	D	V2	T	D	V2	T	D	V2
5	10.1	0.9	0.8	7.0	1.0	1.1	4.9	1.1	1.4																		
10	20.6	0.9	0.8	14.4	0.9	1.1	10.3	1.0	1.4	7.9	1.1	1.8	6.1	1.2	2.1	4.5	1.4	2.4									
15	30.7	0.9	0.8	21.5	0.9	1.1	15.7	1.0	1.4	12.0	1.1	1.8	9.4	1.1	2.1	7.4	1.2	2.5	5.8	1.4	2.8						
20	40.9	0.9	0.8	28.6	0.9	1.1	20.9	1.0	1.4	16.3	1.0	1.8	12.6	1.1	2.1	10.1	1.2	2.5	8.0	1.3	2.9	6.3	1.4	3.3			
25	51.1	0.9	0.8	35.8	0.9	1.1	26.1	1.0	1.4	20.3	1.0	1.8	16.0	1.1	2.1	12.7	1.2	2.5	10.2	1.3	2.9	8.2	1.4	3.4	6.5	1.5	3.8
30	61.3	0.9	0.8	42.9	0.9	1.1	31.4	1.0	1.4	24.4	1.0	1.8	19.2	1.1	2.1	15.2	1.2	2.5	12.3	1.3	2.9	10.0	1.3	3.4	8.1	1.5	3.8
35	71.5	0.9	0.8	50.1	0.9	1.1	36.6	1.0	1.4	28.3	1.0	1.8	22.4	1.1	2.1	18.0	1.2	2.5	14.4	1.2	2.9	11.7	1.3	3.4	9.6	1.4	3.8
40	81.8	0.9	0.8	57.2	0.9	1.1	41.8	1.0	1.5	32.4	1.0	1.8	25.6	1.1	2.1	20.6	1.2	2.5	16.5	1.2	2.9	13.5	1.3	3.4	11.1	1.4	3.8
45	92.0	0.9	0.8	64.4	0.9	1.1	47.0	1.0	1.5	36.4	1.0	1.8	28.8	1.1	2.1	23.1	1.2	2.5	18.6	1.2	2.9	15.2	1.3	3.4	12.6	1.4	3.9
50	102.2	0.9	0.8	71.5	0.9	1.1	52.2	1.0	1.5	40.5	1.0	1.8	32.0	1.1	2.1	25.7	1.2	2.5	20.9	1.2	2.9	17.0	1.3	3.4	14.0	1.4	3.9
55	112.4	0.9	0.8	78.7	0.9	1.1	57.5	1.0	1.5	44.5	1.0	1.8	35.2	1.1	2.1	28.2	1.2	2.5	23.0	1.2	2.9	18.9	1.3	3.4	15.4	1.4	3.9
60	122.6	0.9	0.8	85.8	0.9	1.1	62.7	1.0	1.5	48.5	1.0	1.8	38.4	1.1	2.2	30.8	1.2	2.5	25.1	1.2	2.9	20.6	1.3	3.4	16.9	1.4	3.9
65	132.8	0.9	0.8	93.0	0.9	1.1	67.9	1.0	1.5	52.6	1.0	1.8	41.5	1.1	2.2	33.4	1.2	2.5	27.2	1.2	2.9	22.3	1.3	3.4	18.3	1.4	3.9
70	143.1	0.9	0.8	100.1	0.9	1.1	73.1	1.0	1.5	56.6	1.0	1.8	44.7	1.1	2.2	35.9	1.2	2.5	29.2	1.2	2.9	24.0	1.3	3.4	20.0	1.4	3.9
75	153.3	0.9	0.8	107.3	0.9	1.1	78.3	1.0	1.5	60.7	1.0	1.8	47.9	1.1	2.2	38.5	1.2	2.5	31.3	1.2	2.9	25.7	1.3	3.4	21.4	1.4	3.9
80	163.5	0.9	0.8	114.4	0.9	1.1	83.6	1.0	1.5	64.7	1.0	1.8	51.1	1.1	2.2	41.0	1.2	2.5	33.4	1.2	2.9	27.4	1.3	3.4	22.8	1.4	3.9
85	173.7	0.9	0.8	121.6	0.9	1.1	88.8	1.0	1.5	68.8	1.0	1.8	54.3	1.1	2.2	43.6	1.2	2.5	35.5	1.2	2.9	29.1	1.3	3.4	24.2	1.4	3.9
90	183.9	0.9	0.8	128.7	0.9	1.1	94.0	1.0	1.5	72.8	1.0	1.8	57.5	1.1	2.2	46.2	1.2	2.5	37.6	1.2	2.9	30.8	1.3	3.4	25.7	1.4	3.9
95	194.1	0.9	0.8	135.9	0.9	1.1	99.2	1.0	1.5	76.8	1.0	1.8	60.7	1.1	2.2	48.7	1.2	2.5	39.7	1.2	2.9	32.5	1.3	3.4	27.1	1.4	3.9
100	204.4	0.9	0.8	143.0	0.9	1.1	104.4	1.0	1.5	80.9	1.0	1.8	63.9	1.1	2.2	51.3	1.2	2.5	41.7	1.2	2.9	34.2	1.3	3.4	28.5	1.3	3.9
105	214.6	0.9	0.8	150.2	0.9	1.1	109.7	1.0	1.5	84.9	1.0	1.8	67.1	1.1	2.2	53.9	1.2	2.5	43.8	1.2	2.9	35.9	1.3	3.4	29.9	1.3	3.9
110	224.8	0.9	0.8	157.4	0.9	1.1	114.9	1.0	1.5	89.0	1.0	1.8	70.3	1.1	2.2	56.4	1.2	2.5	45.9	1.2	2.9	37.6	1.3	3.4	31.3	1.3	3.9
115	235.0	0.9	0.8	164.5	0.9	1.1	120.1	1.0	1.5	93.0	1.0	1.8	73.5	1.1	2.2	59.0	1.2	2.5	48.0	1.2	2.9	39.3	1.3	3.4	32.7	1.3	3.9
120	245.2	0.9	0.8	171.7	0.9	1.1	125.3	1.0	1.5	97.1	1.0	1.8	76.7	1.1	2.2	61.5	1.2	2.5	49.9	1.2	3.0	41.0	1.3	3.4	34.2	1.3	3.9
125	255.5	0.9	0.8	178.8	0.9	1.1	130.5	1.0	1.5	101.1	1.0	1.8	79.9	1.1	2.2	64.1	1.2	2.5	52.0	1.2	3.0	42.7	1.3	3.4	35.6	1.3	3.9
130	265.7	0.9	0.8	186.0	0.9	1.1	135.8	1.0	1.5	105.1	1.0	1.8	83.0	1.1	2.2	66.7	1.2	2.5	54.1	1.2	3.0	44.4	1.3	3.4	37.0	1.3	3.9
135	275.9	0.9	0.8	193.1	0.9	1.1	141.0	1.0	1.5	109.2	1.0	1.8	86.2	1.1	2.2	69.2	1.2	2.5	56.1	1.2	3.0	46.1	1.3	3.4	38.4	1.3	3.9
140	286.1	0.9	0.8	200.3	0.9	1.1	146.2	1.0	1.5	113.2	1.0	1.8	89.4	1.1	2.2	71.8	1.2	2.5	58.2	1.2	3.0	47.8	1.3	3.4	39.9	1.3	3.9
145	296.3	0.9	0.8	207.4	0.9	1.1	151.4	1.0	1.5	117.3	1.0	1.8	92.6	1.1	2.2	74.4	1.2	2.5	60.3	1.2	3.0	49.6	1.3	3.4	41.3	1.3	3.9
150	306.5	0.9	0.8	214.6	0.9	1.1	156.7	1.0	1.5	121.3	1.0	1.8	95.8	1.1	2.2	76.9	1.2	2.5	62.4	1.2	3.0	51.3	1.3	3.4	42.7	1.3	3.9

RETARDANCE "D" AND "B"

NOTE: Width and Depth dimensions are in feet; Velocity measurements are in feet per second; Depth "D" does not include allowance for freeboard or settlement.

Table DV-7 Parabolic Diversion Design Chart (Retardance "D" and "B", Grade 6.00%)

V1 FOR RETARDANCE "D", TOP WIDTH (T), DEPTH (D), AND V2 FOR RETARDANCE "B"

Grade 6.00 Percent

Q CFS	V1=2.0			V1=2.5			V1=3.0			V1=3.5			V1=4.0			V1=4.5			V1=5.0			V1=5.5			V1=6.0		
	T	D	V2	T	D	V2	T	D	V2	T	D	V2	T	D	V2	T	D	V2	T	D	V2	T	D	V2	T	D	V2
5	12.4	0.7	0.8	8.7	0.8	1.0	6.2	0.9	1.4	4.7	1.0	1.8	3.5	1.2	1.9												
10	24.7	0.7	0.8	17.6	0.8	1.0	12.8	0.9	1.4	9.8	0.9	1.7	7.8	1.0	2.0	6.2	1.0	2.3	4.9	1.1	2.7						
15	37.1	0.7	0.8	26.4	0.8	1.1	19.2	0.8	1.4	15.0	0.9	1.7	11.8	0.9	2.0	9.5	1.0	2.4	7.7	1.1	2.7	6.2	1.2	3.1	5.0	1.3	3.5
20	49.4	0.7	0.8	35.1	0.8	1.1	25.6	0.8	1.4	19.9	0.9	1.7	16.0	0.9	2.0	12.9	1.0	2.4	10.4	1.0	2.8	8.5	1.1	3.2	7.0	1.2	3.6
25	61.8	0.7	0.8	43.9	0.8	1.1	32.0	0.8	1.4	24.9	0.9	1.7	19.9	0.9	2.0	16.1	1.0	2.4	13.1	1.0	2.8	10.8	1.1	3.2	8.9	1.2	3.6
30	74.1	0.7	0.8	52.7	0.8	1.1	38.4	0.8	1.4	29.9	0.9	1.7	23.8	0.9	2.1	19.3	1.0	2.4	15.9	1.0	2.8	13.0	1.1	3.2	10.8	1.1	3.6
35	86.5	0.7	0.8	61.5	0.8	1.1	44.8	0.8	1.4	34.8	0.9	1.7	27.8	0.9	2.1	22.5	1.0	2.4	18.5	1.0	2.8	15.4	1.1	3.2	12.7	1.1	3.6
40	98.9	0.7	0.8	70.2	0.8	1.1	51.2	0.8	1.4	39.8	0.9	1.7	31.8	0.9	2.1	25.7	1.0	2.4	21.2	1.0	2.8	17.6	1.1	3.2	14.5	1.1	3.6
45	111.2	0.7	0.8	79.0	0.8	1.1	57.6	0.8	1.4	44.8	0.9	1.7	35.7	0.9	2.1	29.0	1.0	2.4	23.8	1.0	2.8	19.8	1.1	3.2	16.6	1.1	3.6
50	123.6	0.7	0.8	87.8	0.8	1.1	64.0	0.8	1.4	49.7	0.9	1.7	39.7	0.9	2.1	32.2	1.0	2.4	26.4	1.0	2.8	22.0	1.1	3.2	18.4	1.1	3.6
55	136.9	0.7	0.8	96.6	0.8	1.1	70.4	0.8	1.4	54.7	0.9	1.7	43.6	0.9	2.1	35.4	1.0	2.4	29.1	1.0	2.8	24.2	1.1	3.2	20.2	1.1	3.7
60	148.3	0.7	0.8	105.3	0.8	1.1	76.8	0.8	1.4	59.7	0.9	1.7	47.6	0.9	2.1	38.6	1.0	2.4	31.7	1.0	2.8	26.3	1.1	3.2	22.0	1.1	3.7
65	160.6	0.7	0.8	114.1	0.8	1.1	83.2	0.8	1.4	64.7	0.9	1.7	51.6	0.9	2.1	41.8	1.0	2.4	34.3	1.0	2.8	28.5	1.1	3.2	23.8	1.1	3.7
70	173.0	0.7	0.8	122.9	0.8	1.1	89.6	0.8	1.4	69.6	0.9	1.7	55.5	0.9	2.1	45.0	1.0	2.4	37.0	1.0	2.8	30.7	1.1	3.2	25.6	1.1	3.7
75	185.4	0.7	0.8	131.7	0.8	1.1	96.0	0.8	1.4	74.6	0.9	1.7	59.5	0.9	2.1	48.2	1.0	2.4	39.6	1.0	2.8	32.9	1.1	3.2	27.4	1.1	3.7
80	197.7	0.7	0.8	140.4	0.8	1.1	102.3	0.8	1.4	79.6	0.9	1.7	63.5	0.9	2.1	51.4	1.0	2.4	42.2	1.0	2.8	35.1	1.1	3.2	29.3	1.1	3.7
85	210.1	0.7	0.8	149.2	0.8	1.1	108.7	0.8	1.4	84.5	0.9	1.7	67.4	0.9	2.1	54.7	1.0	2.4	44.9	1.0	2.8	37.3	1.1	3.2	31.1	1.1	3.7
90	222.4	0.7	0.8	158.0	0.8	1.1	115.1	0.8	1.4	89.5	0.9	1.7	71.4	0.9	2.1	57.9	1.0	2.4	47.5	1.0	2.8	39.5	1.1	3.2	32.9	1.1	3.7
95	234.8	0.7	0.8	166.8	0.8	1.1	121.5	0.8	1.4	94.5	0.9	1.7	75.4	0.9	2.1	61.1	1.0	2.4	50.2	1.0	2.8	41.7	1.1	3.2	34.7	1.1	3.7
100	247.1	0.7	0.8	175.5	0.8	1.1	127.9	0.8	1.4	99.5	0.9	1.7	79.3	0.9	2.1	64.3	1.0	2.4	52.8	1.0	2.8	43.9	1.1	3.2	36.6	1.1	3.7
105	259.5	0.7	0.8	184.3	0.8	1.1	134.3	0.8	1.4	104.4	0.9	1.7	83.3	0.9	2.1	67.5	1.0	2.4	55.4	1.0	2.8	46.1	1.1	3.2	38.4	1.1	3.7
110	271.8	0.7	0.8	193.1	0.8	1.1	140.7	0.8	1.4	109.4	0.9	1.7	87.3	0.9	2.1	70.7	1.0	2.4	58.1	1.0	2.8	48.2	1.1	3.2	40.2	1.1	3.7
115	284.2	0.7	0.8	201.9	0.8	1.1	147.1	0.8	1.4	114.4	0.9	1.7	91.2	0.9	2.1	73.9	1.0	2.4	60.7	1.0	2.8	50.4	1.1	3.2	42.0	1.1	3.7
120	296.6	0.7	0.8	210.7	0.8	1.1	153.5	0.8	1.4	119.3	0.9	1.7	95.2	0.9	2.1	77.2	1.0	2.4	63.3	1.0	2.8	52.6	1.1	3.2	43.9	1.1	3.7
125	308.9	0.7	0.8	219.4	0.8	1.1	159.9	0.8	1.4	124.3	0.9	1.7	99.2	0.9	2.1	80.4	1.0	2.4	66.0	1.0	2.8	54.8	1.1	3.2	45.7	1.1	3.7
130	321.3	0.7	0.8	228.2	0.8	1.1	166.3	0.8	1.4	129.3	0.9	1.7	103.1	0.9	2.1	83.6	1.0	2.4	68.6	1.0	2.8	57.0	1.1	3.2	47.5	1.1	3.7
135	333.6	0.7	0.8	237.0	0.8	1.1	172.7	0.8	1.4	134.3	0.9	1.7	107.1	0.9	2.1	86.8	1.0	2.4	71.3	1.0	2.8	59.2	1.1	3.2	49.3	1.1	3.7
140	346.0	0.7	0.8	245.8	0.8	1.1	179.1	0.8	1.4	139.2	0.9	1.7	111.0	0.9	2.1	90.0	1.0	2.4	73.9	1.0	2.8	61.4	1.1	3.2	51.2	1.1	3.7
145	358.3	0.7	0.8	254.5	0.8	1.1	185.5	0.8	1.4	144.2	0.9	1.7	115.0	0.9	2.1	93.2	1.0	2.4	76.5	1.0	2.8	63.6	1.1	3.2	53.0	1.1	3.7
150	370.7	0.7	0.8	263.3	0.8	1.1	191.9	0.8	1.4	149.2	0.9	1.7	119.0	0.9	2.1	96.4	1.0	2.4	79.2	1.0	2.8	65.8	1.1	3.2	54.8	1.1	3.7

RETARDANCE "D" AND "B"

NOTE: Width and Depth dimensions are in feet; Velocity measurements are in feet per second; Depth "D" does not include allowance for freeboard or settlement.

Table DV-8 Parabolic Diversion Design Chart (Retardance "D" and "B", Grade 8.00%)

V1 FOR RETARDANCE "D", TOP WIDTH (T), DEPTH (D), AND V2 FOR RETARDANCE "B"

Grade 8.00 Percent

Q CFS	V1=2.0			V1=2.5			V1=3.0			V1=3.5			V1=4.0			V1=4.5			V1=5.0			V1=5.5			V1=6.0		
	T	D	V2	T	D	V2	T	D	V2	T	D	V2	T	D	V2	T	D	V2	T	D	V2	T	D	V2	T	D	V2
5	14.0	0.7	0.8	10.1	0.7	1.0	7.4	0.8	1.3	5.5	0.8	1.6	4.4	0.9	1.9	3.4	1.0	2.1									
10	28.0	0.7	0.8	20.1	0.7	1.0	15.0	0.8	1.3	11.3	0.8	1.7	9.1	0.8	2.0	7.4	0.9	2.3	8.0	0.9	2.6	4.9	1.0	3.0	3.6	1.2	3.3
15	41.9	0.7	0.8	30.1	0.7	1.0	22.4	0.8	1.3	17.0	0.8	1.7	13.9	0.8	2.0	11.4	0.9	2.3	9.2	0.9	2.7	7.6	1.0	3.0	6.3	1.0	3.4
20	55.9	0.7	0.8	40.1	0.7	1.0	29.9	0.8	1.3	22.6	0.8	1.7	18.5	0.8	2.0	15.1	0.9	2.3	12.5	0.9	2.7	10.2	1.0	3.1	8.5	1.0	3.5
25	69.9	0.7	0.8	50.1	0.7	1.0	37.3	0.8	1.3	28.2	0.8	1.7	23.1	0.8	2.0	18.8	0.9	2.3	15.6	0.9	2.7	13.0	0.9	3.1	10.8	1.0	3.5
30	83.9	0.7	0.8	60.1	0.7	1.0	44.8	0.8	1.3	33.9	0.8	1.7	27.7	0.8	2.0	22.6	0.9	2.3	18.6	0.9	2.7	15.6	0.9	3.1	13.0	1.0	3.5
35	97.9	0.7	0.8	70.1	0.7	1.0	52.3	0.8	1.3	39.5	0.8	1.7	32.3	0.8	2.0	26.3	0.9	2.3	21.7	0.9	2.7	18.2	0.9	3.1	15.3	1.0	3.5
40	111.8	0.7	0.8	80.2	0.7	1.0	59.7	0.8	1.3	45.1	0.8	1.7	36.9	0.8	2.0	30.1	0.9	2.3	24.8	0.9	2.7	20.8	0.9	3.1	17.5	1.0	3.5
45	125.8	0.7	0.8	90.2	0.7	1.0	67.2	0.8	1.3	50.8	0.8	1.7	41.5	0.8	2.0	33.8	0.9	2.3	27.9	0.9	2.7	23.3	0.9	3.1	19.7	1.0	3.5
50	139.8	0.7	0.8	100.2	0.7	1.0	74.7	0.8	1.3	56.4	0.8	1.7	46.1	0.8	2.0	37.6	0.9	2.3	31.0	0.9	2.7	25.9	0.9	3.1	21.9	1.0	3.5
55	153.8	0.7	0.8	110.2	0.7	1.0	82.1	0.8	1.3	62.1	0.8	1.7	50.7	0.8	2.0	41.3	0.9	2.3	34.1	0.9	2.7	28.5	0.9	3.1	24.0	1.0	3.5
60	167.8	0.7	0.8	120.2	0.7	1.0	89.6	0.8	1.3	67.7	0.8	1.7	55.3	0.8	2.0	45.1	0.9	2.3	37.2	0.9	2.7	31.1	0.9	3.1	26.2	1.0	3.5
65	181.7	0.7	0.8	130.3	0.7	1.0	97.0	0.8	1.3	73.3	0.8	1.7	60.0	0.8	2.0	48.8	0.9	2.3	40.3	0.9	2.7	33.7	0.9	3.1	28.4	1.0	3.5
70	195.7	0.7	0.8	140.3	0.7	1.0	104.5	0.8	1.3	79.0	0.8	1.7	64.6	0.8	2.0	52.6	0.9	2.3	43.4	0.9	2.7	36.3	0.9	3.1	30.6	1.0	3.5
75	209.7	0.7	0.8	150.3	0.7	1.0	112.0	0.8	1.3	84.6	0.8	1.7	69.2	0.8	2.0	56.3	0.9	2.3	46.6	0.9	2.7	38.9	0.9	3.1	32.8	1.0	3.5
80	223.7	0.7	0.8	160.3	0.7	1.0	119.4	0.8	1.3	90.3	0.8	1.7	73.8	0.8	2.0	60.1	0.9	2.3	49.6	0.9	2.7	41.4	0.9	3.1	35.0	1.0	3.5
85	237.7	0.7	0.8	170.3	0.7	1.0	126.9	0.8	1.3	95.9	0.8	1.7	78.4	0.8	2.0	63.8	0.9	2.3	52.7	0.9	2.7	44.0	0.9	3.1	37.1	1.0	3.5
90	251.6	0.7	0.8	180.3	0.7	1.0	134.4	0.8	1.3	101.6	0.8	1.7	83.0	0.8	2.0	67.6	0.9	2.3	55.8	0.9	2.7	46.6	0.9	3.1	39.3	1.0	3.5
95	265.6	0.7	0.8	190.4	0.7	1.0	141.8	0.8	1.3	107.2	0.8	1.7	87.6	0.8	2.0	71.3	0.9	2.3	58.9	0.9	2.7	49.2	0.9	3.1	41.5	1.0	3.5
100	279.6	0.7	0.8	200.4	0.7	1.0	149.3	0.8	1.3	112.8	0.8	1.7	92.2	0.8	2.0	75.1	0.9	2.3	62.0	0.9	2.7	51.8	0.9	3.1	43.7	1.0	3.5
105	293.6	0.7	0.8	210.4	0.7	1.0	156.8	0.8	1.3	118.5	0.8	1.7	96.8	0.8	2.0	78.9	0.9	2.3	65.1	0.9	2.7	54.4	0.9	3.1	45.9	1.0	3.5
110	307.6	0.7	0.8	220.4	0.7	1.0	164.2	0.8	1.3	124.1	0.8	1.7	101.4	0.8	2.0	82.6	0.9	2.3	68.2	0.9	2.7	57.0	0.9	3.1	48.0	1.0	3.5
115	321.5	0.7	0.8	230.4	0.7	1.0	171.7	0.8	1.3	129.8	0.8	1.7	106.1	0.8	2.0	86.4	0.9	2.3	71.3	0.9	2.7	59.6	0.9	3.1	50.2	1.0	3.5
120	335.5	0.7	0.8	240.5	0.7	1.0	179.1	0.8	1.3	135.4	0.8	1.7	110.7	0.8	2.0	90.1	0.9	2.3	74.4	0.9	2.7	62.2	0.9	3.1	52.4	1.0	3.5
125	349.5	0.7	0.8	250.5	0.7	1.0	186.6	0.8	1.3	141.0	0.8	1.7	115.3	0.8	2.0	93.9	0.9	2.3	77.5	0.9	2.7	64.7	0.9	3.1	54.6	1.0	3.5
130	363.5	0.7	0.8	260.5	0.7	1.0	194.1	0.8	1.3	146.7	0.8	1.7	119.9	0.8	2.0	97.6	0.9	2.3	80.6	0.9	2.7	67.3	0.9	3.1	56.8	1.0	3.5
135	377.5	0.7	0.8	270.5	0.7	1.0	201.5	0.8	1.3	152.3	0.8	1.7	124.5	0.8	2.0	101.4	0.9	2.3	83.7	0.9	2.7	69.9	0.9	3.1	59.0	1.0	3.5
140	391.5	0.7	0.8	280.5	0.7	1.0	209.0	0.8	1.3	158.0	0.8	1.7	129.1	0.8	2.0	105.1	0.9	2.3	86.8	0.9	2.7	72.5	0.9	3.1	61.1	1.0	3.5
145	405.4	0.7	0.8	290.6	0.7	1.0	216.5	0.8	1.3	163.6	0.8	1.7	133.7	0.8	2.0	108.9	0.9	2.3	89.9	0.9	2.7	75.1	0.9	3.1	63.3	1.0	3.5
150	419.4	0.7	0.8	300.6	0.7	1.0	223.9	0.8	1.3	169.3	0.8	1.7	138.3	0.8	2.0	112.6	0.9	2.3	93.0	0.9	2.7	77.7	0.9	3.1	65.5	1.0	3.5

RETARDANCE "D" AND "B"

NOTE: Width and Depth dimensions are in feet; Velocity measurements are in feet per second; Depth "D" does not include allowance for freeboard or settlement.

Table DV-9 Parabolic Diversion Design Chart (Retardance "D" and "B", Grade 10.00%)

V1 FOR RETARDANCE "D", TOP WIDTH (T), DEPTH (D), AND V2 FOR RETARDANCE "B"

Grade 10.00 Percent

Q CFS	V1=2.0			V1=2.5			V1=3.0			V1=3.5			V1=4.0			V1=4.5			V1=5.0			V1=5.5			V1=6.0		
	T	D	V2	T	D	V2	T	D	V2	T	D	V2	T	D	V2	T	D	V2	T	D	V2	T	D	V2	T	D	V2
5	15.3	0.6	0.8	11.1	0.7	1.0	8.1	0.7	1.3	6.3	0.7	1.6	4.8	0.8	1.9	4.0	0.9	2.2	3.1	1.0	2.4						
10	30.6	0.6	0.8	22.1	0.7	1.0	16.5	0.7	1.3	12.8	0.7	1.6	10.0	0.8	2.0	8.4	0.8	2.2	6.9	0.8	2.6	5.7	0.9	2.9	4.7	1.0	3.3
15	45.9	0.6	0.8	33.2	0.7	1.0	24.7	0.7	1.3	19.2	0.7	1.6	15.0	0.8	2.0	12.7	0.8	2.2	10.5	0.8	2.6	8.7	0.9	3.0	7.3	0.9	3.3
20	61.2	0.6	0.8	44.2	0.7	1.0	32.9	0.7	1.3	25.6	0.7	1.6	20.0	0.8	2.0	17.0	0.8	2.2	14.1	0.8	2.6	11.8	0.9	3.0	9.8	0.9	3.4
25	76.5	0.6	0.8	55.3	0.7	1.0	41.1	0.7	1.3	32.0	0.7	1.6	25.0	0.8	2.0	21.2	0.8	2.3	17.6	0.8	2.6	14.7	0.9	3.0	12.5	0.9	3.4
30	91.8	0.6	0.8	66.3	0.7	1.0	49.3	0.7	1.3	38.3	0.7	1.6	29.9	0.8	2.0	25.4	0.8	2.3	21.1	0.8	2.6	17.7	0.8	3.0	15.0	0.9	3.3
35	107.1	0.6	0.8	77.4	0.7	1.0	57.5	0.7	1.3	44.7	0.7	1.6	34.9	0.8	2.0	29.7	0.8	2.3	24.6	0.8	2.6	20.6	0.8	3.0	17.5	0.9	3.4
40	122.4	0.6	0.8	88.4	0.7	1.0	65.7	0.7	1.3	51.1	0.7	1.6	39.9	0.8	2.0	33.9	0.8	2.3	28.1	0.8	2.6	23.5	0.8	3.0	20.0	0.9	3.4
45	137.8	0.6	0.8	99.5	0.7	1.0	73.9	0.7	1.3	57.5	0.7	1.6	44.9	0.8	2.0	38.0	0.8	2.3	31.6	0.8	2.6	26.5	0.8	3.0	22.5	0.9	3.4
50	153.1	0.6	0.8	110.6	0.7	1.0	82.1	0.7	1.3	63.9	0.7	1.6	49.9	0.8	2.0	42.2	0.8	2.3	35.1	0.8	2.6	29.4	0.8	3.0	25.0	0.9	3.4
55	168.4	0.6	0.8	121.6	0.7	1.0	90.3	0.7	1.3	70.3	0.7	1.6	54.9	0.8	2.0	46.4	0.8	2.3	38.6	0.8	2.6	32.3	0.8	3.0	27.5	0.9	3.4
60	183.7	0.6	0.8	132.7	0.7	1.0	98.5	0.7	1.3	76.7	0.7	1.6	59.9	0.8	2.0	50.7	0.8	2.3	42.1	0.8	2.6	35.3	0.8	3.0	30.0	0.9	3.4
65	199.0	0.6	0.8	143.7	0.7	1.0	106.7	0.7	1.3	83.1	0.7	1.6	64.8	0.8	2.0	54.9	0.8	2.3	45.6	0.8	2.6	38.2	0.8	3.0	32.5	0.9	3.4
70	214.3	0.6	0.8	154.8	0.7	1.0	115.0	0.7	1.3	89.4	0.7	1.6	69.8	0.8	2.0	59.1	0.8	2.3	49.1	0.8	2.6	41.2	0.8	3.0	35.0	0.9	3.4
75	229.6	0.6	0.8	165.8	0.7	1.0	123.2	0.7	1.3	95.8	0.7	1.6	74.8	0.8	2.0	63.3	0.8	2.3	52.6	0.8	2.6	44.1	0.8	3.0	37.4	0.9	3.4
80	244.9	0.6	0.8	176.9	0.7	1.0	131.4	0.7	1.3	102.2	0.7	1.6	79.8	0.8	2.0	67.6	0.8	2.3	56.1	0.8	2.6	47.0	0.8	3.0	39.8	0.9	3.4
85	260.2	0.6	0.8	187.9	0.7	1.0	139.6	0.7	1.3	108.6	0.7	1.6	84.8	0.8	2.0	71.8	0.8	2.3	59.6	0.8	2.6	50.0	0.8	3.0	42.3	0.9	3.4
90	275.5	0.6	0.8	199.0	0.7	1.0	147.8	0.7	1.3	115.0	0.7	1.6	89.8	0.8	2.0	76.0	0.8	2.3	63.1	0.8	2.6	52.9	0.8	3.0	44.8	0.9	3.4
95	290.8	0.6	0.8	210.0	0.7	1.0	156.0	0.7	1.3	121.4	0.7	1.6	94.8	0.8	2.0	80.2	0.8	2.3	66.6	0.8	2.6	55.8	0.8	3.0	47.3	0.9	3.4
100	306.1	0.6	0.8	221.1	0.7	1.0	164.2	0.7	1.3	127.8	0.7	1.6	99.8	0.8	2.0	84.4	0.8	2.3	70.1	0.8	2.6	58.8	0.8	3.0	49.7	0.9	3.4
105	321.4	0.6	0.8	232.2	0.7	1.0	172.4	0.7	1.3	134.2	0.7	1.6	104.7	0.8	2.0	88.7	0.8	2.3	73.6	0.8	2.6	61.7	0.8	3.0	52.2	0.9	3.4
110	336.7	0.6	0.8	243.2	0.7	1.0	180.6	0.7	1.3	140.5	0.7	1.6	109.7	0.8	2.0	92.9	0.8	2.3	77.1	0.8	2.6	64.7	0.8	3.0	54.7	0.9	3.4
115	352.0	0.6	0.8	254.3	0.7	1.0	188.8	0.7	1.3	146.9	0.7	1.6	114.7	0.8	2.0	97.1	0.8	2.3	80.6	0.8	2.6	67.6	0.8	3.0	57.2	0.9	3.4
120	367.3	0.6	0.8	265.3	0.7	1.0	197.1	0.7	1.3	153.3	0.7	1.6	119.7	0.8	2.0	101.3	0.8	2.3	84.1	0.8	2.6	70.5	0.8	3.0	59.7	0.9	3.4
125	382.6	0.6	0.8	276.4	0.7	1.0	205.3	0.7	1.3	159.7	0.7	1.6	124.7	0.8	2.0	105.5	0.8	2.3	87.6	0.8	2.6	73.5	0.8	3.0	62.2	0.9	3.4
130	397.9	0.6	0.8	287.4	0.7	1.0	213.5	0.7	1.3	166.1	0.7	1.6	129.7	0.8	2.0	109.8	0.8	2.3	91.1	0.8	2.6	76.4	0.8	3.0	64.7	0.9	3.4
135	413.2	0.6	0.8	298.5	0.7	1.0	221.7	0.7	1.3	172.5	0.7	1.6	134.7	0.8	2.0	114.0	0.8	2.3	94.6	0.8	2.6	79.3	0.8	3.0	67.2	0.9	3.4
140	428.5	0.6	0.8	309.5	0.7	1.0	229.9	0.7	1.3	178.9	0.7	1.6	139.7	0.8	2.0	118.2	0.8	2.3	98.1	0.8	2.6	82.3	0.8	3.0	69.6	0.9	3.4
145	443.9	0.6	0.8	320.6	0.7	1.0	238.1	0.7	1.3	185.3	0.7	1.6	144.6	0.8	2.0	122.4	0.8	2.3	101.7	0.8	2.6	85.2	0.8	3.0	72.1	0.9	3.4
150	459.2	0.6	0.8	331.7	0.7	1.0	246.3	0.7	1.3	191.6	0.7	1.6	149.6	0.8	2.0	126.7	0.8	2.3	105.2	0.8	2.6	88.2	0.9	3.0	74.6	0.9	3.4

RETARDANCE "D" AND "B"

NOTE: Width and Depth dimensions are in feet; Velocity measurements are in feet per second; Depth "D" does not include allowance for freeboard or settlement.

Table DV-10 Parabolic Diversion Design Chart (Retardance "D" and "C", Grade .50%)

V1 FOR RETARDANCE "D", TOP WIDTH (T), DEPTH (D), AND V2 FOR RETARDANCE "C"

Grade 0.50 Percent

Q CFS	V1=2.0			V1=2.5			V1=3.0			V1=3.5			V1=4.0			V1=4.5			V1=5.0			V1=5.5			V1=6.0		
	T	D	V2	T	D	V2	T	D	V2	T	D	V2	T	D	V2	T	D	V2	T	D	V2	T	D	V2	T	D	V2
5																											
10																											
15	8.4	1.6	1.7																								
20	11.7	1.5	1.7	7.1	2.0	2.2																					
25	14.9	1.5	1.7	9.7	1.8	2.2																					
30	18.0	1.5	1.7	12.0	1.7	2.2																					
35	21.0	1.5	1.7	14.2	1.7	2.2	9.3	2.1	2.7																		
40	24.4	1.5	1.7	16.3	1.7	2.2	10.9	2.0	2.7																		
45	27.4	1.5	1.7	18.5	1.7	2.2	12.5	2.0	2.7																		
50	30.5	1.5	1.7	20.6	1.7	2.2	14.1	1.9	2.7	8.7	2.6	3.3															
55	33.5	1.5	1.7	22.7	1.7	2.2	15.7	1.9	2.7	10.4	2.4	3.3															
60	36.6	1.5	1.7	24.8	1.7	2.2	17.2	1.9	2.7	11.7	2.3	3.3															
65	39.6	1.5	1.7	27.3	1.7	2.2	18.8	1.9	2.7	12.9	2.3	3.3															
70	42.6	1.5	1.7	29.4	1.7	2.2	20.3	1.9	2.7	14.0	2.2	3.3	9.8	2.8	3.8												
75	45.7	1.5	1.7	31.4	1.7	2.2	21.8	1.9	2.7	15.2	2.2	3.3	11.3	2.7	3.8												
80	48.7	1.5	1.7	33.5	1.7	2.2	23.3	1.9	2.7	16.3	2.2	3.3	12.2	2.6	3.8												
85	51.7	1.5	1.7	35.6	1.6	2.2	24.8	1.9	2.7	17.4	2.2	3.3	13.2	2.5	3.8												
90	54.8	1.5	1.7	37.7	1.6	2.2	26.3	1.9	2.7	18.5	2.2	3.3	14.2	2.5	3.8												
95	57.8	1.5	1.7	39.8	1.6	2.2	27.8	1.9	2.7	19.6	2.2	3.3	15.1	2.5	3.8												
100	60.9	1.5	1.7	41.9	1.6	2.2	29.7	1.9	2.7	20.7	2.2	3.3	16.0	2.5	3.8	11.0	3.2	4.3									
105	63.9	1.5	1.7	44.0	1.6	2.2	31.2	1.9	2.7	21.8	2.2	3.3	16.9	2.5	3.8	12.3	3.0	4.3									
110	66.9	1.5	1.7	46.1	1.6	2.2	32.6	1.9	2.7	22.9	2.2	3.3	17.8	2.4	3.8	13.1	2.9	4.3									
115	70.0	1.5	1.7	48.1	1.6	2.2	34.1	1.9	2.7	24.0	2.1	3.3	18.7	2.4	3.8	13.9	2.9	4.3									
120	73.0	1.5	1.7	50.2	1.6	2.2	35.6	1.9	2.7	25.1	2.1	3.3	19.6	2.4	3.8	14.6	2.9	4.3									
125	76.1	1.5	1.7	52.3	1.6	2.2	37.1	1.9	2.7	26.2	2.1	3.3	20.5	2.4	3.8	15.4	2.8	4.3									
130	79.1	1.5	1.7	54.4	1.6	2.2	38.5	1.9	2.7	27.3	2.1	3.3	21.3	2.4	3.8	16.1	2.8	4.3									
135	82.1	1.5	1.7	56.5	1.6	2.2	40.0	1.9	2.7	28.4	2.1	3.3	22.2	2.4	3.8	16.9	2.8	4.3									
140	85.2	1.5	1.7	58.6	1.6	2.2	41.5	1.9	2.7	29.4	2.1	3.3	23.1	2.4	3.8	17.6	2.8	4.3									
145	88.2	1.5	1.7	60.7	1.6	2.2	43.0	1.9	2.7	30.5	2.1	3.3	24.0	2.4	3.8	18.3	2.8	4.3	12.3	3.7	4.9						
150	91.3	1.5	1.7	62.8	1.6	2.2	44.5	1.9	2.7	31.6	2.1	3.3	24.8	2.4	3.8	19.0	2.7	4.3	13.1	3.5	4.9						

RETARDANCE "D" AND "C"

NOTE: Width and Depth dimensions are in feet; Velocity measurements are in feet per second; Depth "D" does not include allowance for freeboard or settlement.

Table DV-11 Parabolic Diversion Design Chart (Retardance "D" and "C", Grade 1.00%)

V1 FOR RETARDANCE "D", TOP WIDTH (T), DEPTH (D), AND V2 FOR RETARDANCE "C"

Grade 1.00 Percent

Q CFS	V1=2.0			V1=2.5			V1=3.0			V1=3.5			V1=4.0			V1=4.5			V1=5.0			V1=5.5			V1=6.0		
	T	D	V2	T	D	V2	T	D	V2	T	D	V2	T	D	V2	T	D	V2	T	D	V2	T	D	V2	T	D	V2
5																											
10	8.2	1.2	1.6	5.2	1.4	2.0																					
15	12.6	1.1	1.6	8.7	1.3	2.1	5.5	1.6	2.6																		
20	17.1	1.1	1.6	11.8	1.2	2.1	8.2	1.4	2.6																		
25	21.4	1.1	1.6	14.9	1.2	2.1	10.5	1.4	2.6	7.3	1.6	3.1															
30	25.7	1.1	1.6	18.0	1.2	2.1	12.8	1.4	2.6	9.1	1.6	3.2															
35	29.9	1.1	1.6	21.2	1.2	2.1	15.0	1.3	2.6	10.9	1.5	3.1	7.8	1.8	3.7												
40	34.2	1.1	1.6	24.3	1.2	2.1	17.3	1.3	2.6	12.6	1.5	3.1	9.2	1.7	3.7												
45	38.5	1.1	1.6	27.3	1.2	2.1	19.5	1.3	2.6	14.3	1.5	3.1	10.6	1.7	3.7	7.2	2.2	4.3									
50	42.7	1.1	1.6	30.3	1.2	2.1	21.9	1.3	2.6	16.0	1.5	3.2	11.9	1.7	3.7	8.8	2.0	4.3									
55	47.0	1.1	1.6	33.3	1.2	2.1	24.1	1.3	2.6	17.7	1.5	3.2	13.3	1.7	3.7	9.9	1.9	4.3									
60	51.3	1.1	1.6	36.3	1.2	2.1	26.3	1.3	2.6	19.3	1.5	3.2	14.6	1.7	3.7	11.0	1.9	4.3									
65	55.5	1.1	1.6	39.4	1.2	2.1	28.5	1.3	2.6	21.0	1.5	3.2	15.9	1.6	3.7	12.1	1.9	4.3	8.0	2.5	4.9						
70	59.8	1.1	1.6	42.4	1.2	2.1	30.7	1.3	2.6	22.7	1.5	3.2	17.1	1.6	3.7	13.2	1.9	4.3	9.5	2.3	4.8						
75	64.1	1.1	1.6	45.4	1.2	2.1	32.9	1.3	2.6	24.6	1.5	3.1	18.5	1.6	3.7	14.2	1.8	4.3	10.4	2.2	4.9						
80	68.3	1.1	1.6	48.4	1.2	2.1	35.0	1.3	2.6	26.2	1.5	3.1	19.8	1.6	3.7	15.2	1.8	4.3	11.3	2.2	4.9						
85	72.6	1.1	1.6	51.5	1.2	2.1	37.2	1.3	2.6	27.9	1.5	3.1	21.0	1.6	3.7	16.3	1.8	4.3	12.1	2.2	4.9	8.8	2.7	5.4			
90	76.9	1.1	1.6	54.5	1.2	2.1	39.4	1.3	2.6	29.5	1.5	3.1	22.3	1.6	3.7	17.3	1.8	4.3	13.0	2.1	4.9	9.8	2.6	5.4			
95	81.1	1.1	1.6	57.5	1.2	2.1	41.6	1.3	2.6	31.1	1.5	3.1	23.6	1.6	3.7	18.3	1.8	4.3	13.8	2.1	4.9	10.9	2.5	5.3			
100	85.4	1.1	1.6	60.5	1.2	2.1	43.8	1.3	2.6	32.7	1.5	3.1	24.9	1.6	3.7	19.3	1.8	4.3	14.6	2.1	4.9	11.6	2.4	5.4			
105	89.7	1.1	1.6	63.6	1.2	2.1	46.0	1.3	2.6	34.4	1.5	3.1	26.5	1.6	3.7	20.3	1.8	4.3	15.4	2.1	4.9	12.4	2.4	5.4	9.7	2.8	5.8
110	94.0	1.1	1.6	66.6	1.2	2.1	48.2	1.3	2.6	36.0	1.5	3.1	27.7	1.6	3.7	21.3	1.8	4.3	16.2	2.1	4.9	13.1	2.4	5.4	10.8	2.6	5.8
115	98.2	1.1	1.6	69.6	1.2	2.1	50.4	1.3	2.6	37.6	1.5	3.1	29.0	1.6	3.7	22.3	1.8	4.3	17.0	2.1	4.9	13.8	2.3	5.4	11.5	2.6	5.8
120	102.5	1.1	1.6	72.6	1.2	2.1	52.5	1.3	2.6	39.3	1.5	3.1	30.2	1.6	3.7	23.3	1.8	4.3	17.9	2.1	4.9	14.5	2.3	5.4	12.2	2.6	5.8
125	106.8	1.1	1.6	75.7	1.2	2.1	54.7	1.3	2.6	40.9	1.5	3.1	31.5	1.6	3.7	24.3	1.8	4.3	18.7	2.1	4.9	15.2	2.3	5.4	12.8	2.5	5.8
130	111.0	1.1	1.6	78.7	1.2	2.1	56.9	1.3	2.6	42.5	1.5	3.1	32.7	1.6	3.7	25.3	1.8	4.3	19.4	2.1	4.9	15.9	2.3	5.4	13.4	2.5	5.8
135	115.3	1.1	1.6	81.7	1.2	2.1	59.1	1.3	2.6	44.2	1.5	3.1	34.0	1.6	3.7	26.3	1.8	4.3	20.2	2.0	4.9	16.6	2.3	5.4	14.1	2.5	5.8
140	119.6	1.1	1.6	84.7	1.2	2.1	61.3	1.3	2.6	45.8	1.5	3.1	35.2	1.6	3.7	27.3	1.8	4.3	21.0	2.0	4.9	17.2	2.3	5.4	14.7	2.5	5.8
145	123.8	1.1	1.6	87.8	1.2	2.1	63.5	1.3	2.6	47.5	1.5	3.1	36.5	1.6	3.7	28.7	1.8	4.3	21.8	2.0	4.9	17.9	2.3	5.4	15.3	2.5	5.8
150	128.1	1.1	1.6	90.8	1.2	2.1	65.7	1.3	2.6	49.1	1.5	3.1	37.8	1.6	3.7	29.7	1.8	4.3	22.6	2.0	4.9	18.6	2.3	5.4	15.9	2.4	5.8

RETARDANCE "D" AND "C"

NOTE: Width and Depth dimensions are in feet; Velocity measurements are in feet per second; Depth "D" does not include allowance for freeboard or settlement.

Table DV-12 Parabolic Diversion Design Chart (Retardance "D" and "C", Grade 2.00%)

V1 FOR RETARDANCE "D", TOP WIDTH (T), DEPTH (D), AND V2 FOR RETARDANCE "C"

Grade 2.00 Percent

Q CFS	V1=2.0			V1=2.5			V1=3.0			V1=3.5			V1=4.0			V1=4.5			V1=5.0			V1=5.5			V1=6.0		
	T	D	V2	T	D	V2	T	D	V2	T	D	V2	T	D	V2	T	D	V2	T	D	V2	T	D	V2	T	D	V2
5	5.9	0.9	1.5																								
10	12.4	0.8	1.5	8.1	0.9	2.0	5.9	1.0	2.5																		
15	18.5	0.8	1.5	12.3	0.9	2.0	9.3	1.0	2.5	6.8	1.1	3.0	4.7	1.4	3.5												
20	24.7	0.8	1.5	16.7	0.9	2.0	12.5	1.0	2.5	9.4	1.1	3.0	7.0	1.2	3.6	4.7	1.5	4.1									
25	30.8	0.8	1.5	20.8	0.9	2.0	15.9	1.0	2.4	11.8	1.1	3.0	9.0	1.2	3.5	6.8	1.3	4.1									
30	37.0	0.8	1.5	25.0	0.9	2.0	19.0	1.0	2.5	14.3	1.1	3.0	11.0	1.2	3.5	8.5	1.3	4.1	6.4	1.5	4.7						
35	43.2	0.8	1.5	29.1	0.9	2.0	22.2	1.0	2.5	16.9	1.0	3.0	12.9	1.1	3.5	10.1	1.3	4.1	7.8	1.4	4.7						
40	49.3	0.8	1.5	33.3	0.9	2.0	25.3	1.0	2.5	19.3	1.0	3.0	14.8	1.1	3.5	11.6	1.3	4.1	9.1	1.4	4.7	7.1	1.6	5.2			
45	55.5	0.8	1.5	37.4	0.9	2.0	28.5	1.0	2.5	21.7	1.0	3.0	16.7	1.1	3.5	13.1	1.3	4.1	10.4	1.4	4.7	8.2	1.6	5.2			
50	61.7	0.8	1.5	41.6	0.9	2.0	31.7	1.0	2.5	24.1	1.0	3.0	18.8	1.1	3.5	14.7	1.2	4.1	11.7	1.4	4.7	9.3	1.5	5.3	7.1	1.8	5.8
55	67.8	0.8	1.5	45.7	0.9	2.0	34.8	1.0	2.5	26.5	1.0	3.0	20.7	1.1	3.5	16.2	1.2	4.1	12.9	1.4	4.7	10.4	1.5	5.3	8.2	1.7	5.8
60	74.0	0.8	1.5	49.9	0.9	2.0	38.0	1.0	2.5	28.9	1.0	3.0	22.6	1.1	3.5	17.7	1.2	4.1	14.1	1.4	4.7	11.4	1.5	5.3	9.2	1.7	5.8
65	80.2	0.8	1.5	54.0	0.9	2.0	41.1	1.0	2.5	31.4	1.0	3.0	24.5	1.1	3.5	19.5	1.2	4.1	15.4	1.3	4.7	12.4	1.5	5.3	10.1	1.7	5.8
70	86.3	0.8	1.5	58.2	0.9	2.0	44.3	1.0	2.5	33.8	1.0	3.0	26.3	1.1	3.5	21.0	1.2	4.1	16.6	1.3	4.7	13.5	1.5	5.3	11.0	1.6	5.8
75	92.5	0.8	1.5	62.3	0.9	2.0	47.5	1.0	2.5	36.2	1.0	3.0	28.2	1.1	3.5	22.4	1.2	4.1	17.8	1.3	4.7	14.5	1.5	5.3	11.8	1.6	5.8
80	98.7	0.8	1.5	66.5	0.9	2.0	50.6	1.0	2.5	38.6	1.0	3.0	30.1	1.1	3.5	23.9	1.2	4.1	19.0	1.3	4.7	15.5	1.5	5.3	12.7	1.6	5.8
85	104.8	0.8	1.5	70.6	0.9	2.0	53.8	1.0	2.5	41.0	1.0	3.0	32.0	1.1	3.5	25.4	1.2	4.1	20.3	1.3	4.7	16.5	1.5	5.3	13.6	1.6	5.8
90	111.0	0.8	1.5	74.8	0.9	2.0	57.0	1.0	2.5	43.4	1.0	3.0	33.8	1.1	3.5	26.9	1.2	4.1	21.8	1.3	4.6	17.5	1.5	5.3	14.4	1.6	5.8
95	117.2	0.8	1.5	78.9	0.9	2.0	60.1	1.0	2.5	45.8	1.0	3.0	35.7	1.1	3.5	28.4	1.2	4.1	23.0	1.3	4.6	18.6	1.5	5.3	15.3	1.6	5.8
100	123.3	0.8	1.5	83.1	0.9	2.0	63.3	1.0	2.5	48.2	1.0	3.0	37.6	1.1	3.5	29.9	1.2	4.1	24.2	1.3	4.6	19.6	1.5	5.3	16.2	1.6	5.8
105	129.5	0.8	1.5	87.3	0.9	2.0	66.4	1.0	2.5	50.6	1.0	3.0	39.5	1.1	3.5	31.4	1.2	4.1	25.4	1.3	4.6	20.6	1.5	5.3	17.0	1.6	5.8
110	135.7	0.8	1.5	91.4	0.9	2.0	69.6	1.0	2.5	53.0	1.0	3.0	41.3	1.1	3.5	32.9	1.2	4.1	26.6	1.3	4.7	21.6	1.4	5.3	17.9	1.6	5.8
115	141.8	0.8	1.5	95.6	0.9	2.0	72.8	1.0	2.5	55.4	1.0	3.0	43.2	1.1	3.5	34.4	1.2	4.1	27.9	1.3	4.7	22.6	1.4	5.3	18.7	1.6	5.8
120	148.0	0.8	1.5	99.7	0.9	2.0	75.9	1.0	2.5	57.9	1.0	3.0	45.1	1.1	3.5	35.9	1.2	4.1	29.1	1.3	4.7	23.9	1.4	5.2	19.5	1.6	5.8
125	154.1	0.8	1.5	103.9	0.9	2.0	79.1	1.0	2.5	60.3	1.0	3.0	47.0	1.1	3.5	37.4	1.2	4.1	30.3	1.3	4.7	24.8	1.4	5.2	20.4	1.6	5.8
130	160.3	0.8	1.5	108.0	0.9	2.0	82.3	1.0	2.5	62.7	1.0	3.0	48.8	1.1	3.5	38.9	1.2	4.1	31.5	1.3	4.7	25.8	1.4	5.3	21.2	1.6	5.8
135	166.5	0.8	1.5	112.2	0.9	2.0	85.4	1.0	2.5	65.1	1.0	3.0	50.7	1.1	3.5	40.3	1.2	4.1	32.7	1.3	4.7	26.8	1.4	5.3	22.1	1.6	5.8
140	172.6	0.8	1.5	116.3	0.9	2.0	88.6	1.0	2.5	67.5	1.0	3.0	52.6	1.1	3.5	41.8	1.2	4.1	33.9	1.3	4.7	27.8	1.4	5.3	22.9	1.6	5.8
145	178.8	0.8	1.5	120.5	0.9	2.0	91.8	1.0	2.5	69.9	1.0	3.0	54.5	1.1	3.5	43.3	1.2	4.1	35.1	1.3	4.7	28.8	1.4	5.3	23.7	1.6	5.8
150	185.0	0.8	1.5	124.6	0.9	2.0	94.9	1.0	2.5	72.3	1.0	3.0	56.4	1.1	3.5	44.8	1.2	4.1	36.3	1.3	4.7	29.8	1.4	5.3	24.6	1.6	5.8

RETARDANCE "D" AND "C"

NOTE: Width and Depth dimensions are in feet; Velocity measurements are in feet per second; Depth "D" does not include allowance for freeboard or settlement.

Table DV-13 Parabolic Diversion Design Chart (Retardance "D" and "C", Grade 4.00%)

V1 FOR RETARDANCE "D", TOP WIDTH (T), DEPTH (D), AND V2 FOR RETARDANCE "C"

Grade 4.00 Percent

Q CFS	V1=2.0			V1=2.5			V1=3.0			V1=3.5			V1=4.0			V1=4.5			V1=5.0			V1=5.5			V1=6.0		
	T	D	V2	T	D	V2	T	D	V2	T	D	V2	T	D	V2	T	D	V2	T	D	V2	T	D	V2	T	D	V2
5	8.5	0.6	1.4	5.9	0.7	1.8	4.1	0.8	2.3																		
10	17.2	0.6	1.4	12.1	0.7	1.8	8.8	0.7	2.3	6.7	0.8	2.8	5.2	0.9	3.3	3.8	1.0	3.9									
15	25.8	0.6	1.4	18.1	0.7	1.8	13.4	0.7	2.3	10.3	0.8	2.8	8.1	0.8	3.4	6.4	0.9	3.9	4.9	1.0	4.5						
20	34.4	0.6	1.4	24.2	0.7	1.8	17.8	0.7	2.3	13.9	0.8	2.8	10.9	0.8	3.4	8.7	0.9	3.9	6.9	1.0	4.5	5.5	1.1	5.0			
25	43.0	0.6	1.4	30.2	0.7	1.9	22.3	0.7	2.3	17.4	0.8	2.8	13.8	0.8	3.3	10.9	0.9	3.9	8.8	1.0	4.5	7.1	1.0	5.1	5.7	1.2	5.6
30	51.6	0.6	1.4	36.3	0.7	1.9	26.7	0.7	2.3	20.8	0.8	2.8	16.5	0.8	3.3	13.2	0.9	3.9	10.7	0.9	4.5	8.7	1.0	5.1	7.1	1.1	5.6
35	60.2	0.6	1.4	42.3	0.7	1.9	31.1	0.7	2.3	24.3	0.8	2.8	19.3	0.8	3.4	15.6	0.9	3.9	12.5	0.9	4.5	10.3	1.0	5.0	8.4	1.1	5.6
40	68.8	0.6	1.4	48.3	0.7	1.9	35.6	0.7	2.3	27.8	0.8	2.8	22.0	0.8	3.4	17.8	0.9	3.9	14.4	0.9	4.5	11.8	1.0	5.0	9.8	1.1	5.7
45	77.4	0.6	1.4	54.4	0.7	1.9	40.0	0.7	2.4	31.2	0.8	2.8	24.8	0.8	3.4	20.0	0.9	3.9	16.4	0.9	4.4	13.3	1.0	5.0	11.1	1.1	5.7
50	86.0	0.6	1.4	60.4	0.7	1.9	44.5	0.7	2.4	34.7	0.8	2.8	27.5	0.8	3.4	22.2	0.9	3.9	18.2	0.9	4.4	14.9	1.0	5.0	12.3	1.1	5.7
55	94.6	0.6	1.4	66.5	0.7	1.9	48.9	0.7	2.4	38.2	0.8	2.8	30.3	0.8	3.4	24.4	0.9	3.9	20.0	0.9	4.4	16.6	1.0	5.0	13.6	1.1	5.7
60	103.2	0.6	1.4	72.5	0.7	1.9	53.4	0.7	2.4	41.7	0.8	2.8	33.0	0.8	3.4	26.6	0.9	3.9	21.8	0.9	4.5	18.1	1.0	5.0	14.9	1.1	5.7
65	111.8	0.6	1.4	78.5	0.7	1.9	57.8	0.7	2.4	45.1	0.8	2.8	35.8	0.8	3.4	28.9	0.9	3.9	23.6	0.9	4.5	19.6	1.0	5.0	16.2	1.1	5.7
70	120.4	0.6	1.4	84.6	0.7	1.9	62.3	0.7	2.4	48.6	0.8	2.8	38.6	0.8	3.4	31.1	0.9	3.9	25.4	0.9	4.5	21.1	1.0	5.0	17.7	1.1	5.6
75	129.0	0.6	1.4	90.6	0.7	1.9	66.7	0.7	2.4	52.1	0.8	2.8	41.3	0.8	3.4	33.3	0.9	3.9	27.2	0.9	4.5	22.6	1.0	5.0	19.0	1.1	5.6
80	137.6	0.6	1.4	96.7	0.7	1.9	71.2	0.7	2.4	55.5	0.8	2.8	44.1	0.8	3.4	35.5	0.9	3.9	29.1	0.9	4.5	24.1	1.0	5.0	20.2	1.1	5.6
85	146.2	0.6	1.4	102.7	0.7	1.9	75.6	0.7	2.4	59.0	0.8	2.8	46.8	0.8	3.4	37.7	0.9	3.9	30.9	0.9	4.5	25.6	1.0	5.0	21.5	1.1	5.6
90	154.8	0.6	1.4	108.7	0.7	1.9	80.0	0.7	2.4	62.5	0.8	2.8	49.6	0.8	3.4	39.9	0.9	3.9	32.7	0.9	4.5	27.1	1.0	5.0	22.8	1.1	5.6
95	163.4	0.6	1.4	114.8	0.7	1.9	84.5	0.7	2.4	65.9	0.8	2.8	52.3	0.8	3.4	42.2	0.9	3.9	34.5	0.9	4.5	28.6	1.0	5.0	24.0	1.1	5.6
100	172.0	0.6	1.4	120.8	0.7	1.9	88.9	0.7	2.4	69.4	0.8	2.8	55.1	0.8	3.4	44.4	0.9	3.9	36.3	0.9	4.5	30.1	1.0	5.0	25.3	1.1	5.6
105	180.6	0.6	1.4	126.9	0.7	1.9	93.4	0.7	2.4	72.9	0.8	2.8	57.8	0.8	3.4	46.6	0.9	3.9	38.1	0.9	4.5	31.6	1.0	5.0	26.5	1.1	5.6
110	189.2	0.6	1.4	132.9	0.7	1.9	97.8	0.7	2.4	76.3	0.8	2.8	60.6	0.8	3.4	48.8	0.9	3.9	39.9	0.9	4.5	33.1	1.0	5.0	27.8	1.1	5.6
115	197.8	0.6	1.4	138.9	0.7	1.9	102.3	0.7	2.4	79.8	0.8	2.8	63.3	0.8	3.4	51.0	0.9	3.9	41.7	0.9	4.5	34.6	1.0	5.0	29.0	1.1	5.6
120	206.4	0.6	1.4	145.0	0.7	1.9	106.7	0.7	2.4	83.3	0.8	2.8	66.1	0.8	3.4	53.3	0.9	3.9	43.6	0.9	4.5	36.1	1.0	5.0	30.2	1.1	5.7
125	215.0	0.6	1.4	151.0	0.7	1.9	111.2	0.7	2.4	86.8	0.8	2.8	68.8	0.8	3.4	55.5	0.9	3.9	45.4	0.9	4.5	37.6	1.0	5.0	31.5	1.1	5.7
130	223.7	0.6	1.4	157.1	0.7	1.9	115.6	0.7	2.4	90.2	0.8	2.8	71.6	0.8	3.4	57.7	0.9	3.9	47.2	0.9	4.5	39.1	1.0	5.0	32.7	1.1	5.7
135	232.3	0.6	1.4	163.1	0.7	1.9	120.1	0.7	2.4	93.7	0.8	2.8	74.3	0.8	3.4	59.9	0.9	3.9	49.0	0.9	4.5	40.6	1.0	5.0	34.0	1.1	5.7
140	240.9	0.6	1.4	169.1	0.7	1.9	124.5	0.7	2.4	97.2	0.8	2.8	77.1	0.8	3.4	62.1	0.9	3.9	50.8	0.9	4.5	42.1	1.0	5.0	35.2	1.1	5.7
145	249.5	0.6	1.4	175.2	0.7	1.9	129.0	0.7	2.4	100.6	0.8	2.8	79.8	0.8	3.4	64.3	0.9	3.9	52.6	0.9	4.5	43.6	1.0	5.0	36.5	1.1	5.7
150	258.1	0.6	1.4	181.2	0.7	1.9	133.4	0.7	2.4	104.1	0.8	2.8	82.6	0.8	3.4	66.6	0.9	3.9	54.4	0.9	4.5	45.1	1.0	5.0	37.8	1.1	5.7

RETARDANCE "D" AND "C"

NOTE: Width and Depth dimensions are in feet; Velocity measurements are in feet per second; Depth "D" does not include allowance for freeboard or settlement.

Table DV-14 Parabolic Diversion Design Chart (Retardance "D" and "C", Grade 6.00%)

V1 FOR RETARDANCE "D", TOP WIDTH (T), DEPTH (D), AND V2 FOR RETARDANCE "C"

Grade 6.00 Percent

Q CFS	V1=2.0			V1=2.5			V1=3.0			V1=3.5			V1=4.0			V1=4.5			V1=5.0			V1=5.5			V1=6.0		
	T	D	V2	T	D	V2	T	D	V2	T	D	V2	T	D	V2	T	D	V2	T	D	V2	T	D	V2	T	D	V2
5	10.6	0.5	1.3	7.3	0.6	1.8	5.3	0.6	2.3	4.0	0.7	2.8	2.9	0.8	3.2												
10	21.1	0.5	1.3	14.7	0.6	1.8	10.9	0.6	2.3	8.4	0.7	2.8	6.6	0.7	3.2	5.3	0.8	3.8	4.2	0.8	4.3						
15	31.6	0.5	1.3	22.1	0.6	1.8	16.3	0.6	2.3	12.7	0.6	2.7	10.1	0.7	3.3	8.2	0.7	3.8	6.6	0.8	4.3	5.4	0.9	4.9	4.3	1.0	5.5
20	42.1	0.5	1.3	29.5	0.6	1.8	21.7	0.6	2.3	17.0	0.6	2.7	13.6	0.7	3.2	11.1	0.7	3.7	9.0	0.8	4.3	7.4	0.8	4.9	6.1	0.9	5.5
25	52.7	0.5	1.3	36.8	0.6	1.8	27.1	0.6	2.3	21.2	0.6	2.8	17.0	0.7	3.2	13.9	0.7	3.8	11.3	0.8	4.3	9.3	0.8	4.9	7.8	0.9	5.5
30	63.2	0.5	1.3	44.2	0.6	1.8	32.5	0.6	2.3	25.4	0.6	2.8	20.4	0.7	3.2	16.6	0.7	3.8	13.7	0.8	4.3	11.3	0.8	4.9	9.4	0.9	5.5
35	73.7	0.5	1.3	51.6	0.6	1.8	38.0	0.6	2.3	29.7	0.6	2.8	23.8	0.7	3.2	19.4	0.7	3.8	16.0	0.8	4.3	13.4	0.8	4.9	11.1	0.9	5.5
40	84.2	0.5	1.3	58.9	0.6	1.8	43.4	0.6	2.3	33.9	0.6	2.8	27.2	0.7	3.3	22.2	0.7	3.8	18.3	0.8	4.3	15.3	0.8	4.9	12.7	0.9	5.5
45	94.8	0.5	1.3	66.3	0.6	1.8	48.8	0.6	2.3	38.2	0.6	2.8	30.7	0.7	3.3	24.9	0.7	3.8	20.6	0.8	4.3	17.2	0.8	4.9	14.5	0.9	5.4
50	105.3	0.5	1.3	73.6	0.6	1.8	54.2	0.6	2.3	42.4	0.6	2.8	34.1	0.7	3.3	27.7	0.7	3.8	22.8	0.8	4.3	19.1	0.8	4.9	16.1	0.9	5.4
55	115.8	0.5	1.3	81.0	0.6	1.8	59.7	0.6	2.3	46.6	0.6	2.8	37.5	0.7	3.3	30.5	0.7	3.8	25.1	0.8	4.3	21.0	0.8	4.9	17.7	0.9	5.4
60	126.4	0.5	1.3	88.4	0.6	1.8	65.1	0.6	2.3	50.9	0.6	2.8	40.9	0.7	3.3	33.3	0.7	3.8	27.4	0.8	4.3	22.9	0.8	4.9	19.3	0.9	5.4
65	136.9	0.5	1.3	95.7	0.6	1.8	70.5	0.6	2.3	55.1	0.6	2.8	44.3	0.7	3.3	36.0	0.7	3.8	29.7	0.8	4.3	24.8	0.8	4.9	20.9	0.9	5.4
70	147.4	0.5	1.3	103.1	0.6	1.8	75.9	0.6	2.3	59.3	0.6	2.8	47.7	0.7	3.3	38.8	0.7	3.8	32.0	0.8	4.3	26.7	0.8	4.9	22.5	0.9	5.4
75	158.0	0.5	1.3	110.5	0.6	1.8	81.3	0.6	2.3	63.6	0.6	2.8	51.1	0.7	3.3	41.6	0.7	3.8	34.3	0.8	4.3	28.6	0.8	4.9	24.1	0.9	5.4
80	168.5	0.5	1.3	117.8	0.6	1.8	86.8	0.6	2.3	67.8	0.6	2.8	54.5	0.7	3.3	44.3	0.7	3.8	36.5	0.8	4.3	30.5	0.8	4.9	25.7	0.9	5.5
85	179.0	0.5	1.3	125.2	0.6	1.8	92.2	0.6	2.3	72.0	0.6	2.8	57.9	0.7	3.3	47.1	0.7	3.8	38.8	0.8	4.3	32.4	0.8	4.9	27.3	0.9	5.5
90	189.6	0.5	1.3	132.6	0.6	1.8	97.6	0.6	2.3	76.3	0.6	2.8	61.3	0.7	3.3	49.9	0.7	3.8	41.1	0.8	4.3	34.3	0.8	4.9	28.9	0.9	5.5
95	200.1	0.5	1.3	139.9	0.6	1.8	103.0	0.6	2.3	80.5	0.6	2.8	64.7	0.7	3.3	52.6	0.7	3.8	43.4	0.8	4.3	36.2	0.8	4.9	30.5	0.9	5.5
100	210.6	0.5	1.3	147.3	0.6	1.8	108.5	0.6	2.3	84.8	0.6	2.8	68.1	0.7	3.3	55.4	0.7	3.8	45.7	0.8	4.3	38.1	0.8	4.9	32.1	0.9	5.5
105	221.1	0.5	1.3	154.6	0.6	1.8	113.9	0.6	2.3	89.0	0.6	2.8	71.5	0.7	3.3	58.2	0.7	3.8	47.9	0.8	4.3	40.0	0.8	4.9	33.7	0.9	5.5
110	231.7	0.5	1.3	162.0	0.6	1.8	119.3	0.6	2.3	93.2	0.6	2.8	74.9	0.7	3.3	60.9	0.7	3.8	50.2	0.8	4.3	41.9	0.8	4.9	35.3	0.9	5.5
115	242.2	0.5	1.3	169.4	0.6	1.8	124.7	0.6	2.3	97.5	0.6	2.8	78.3	0.7	3.3	63.7	0.7	3.8	52.5	0.8	4.3	43.8	0.8	4.9	36.9	0.9	5.5
120	252.7	0.5	1.3	176.7	0.6	1.8	130.2	0.6	2.3	101.7	0.6	2.8	81.7	0.7	3.3	66.5	0.7	3.8	54.8	0.8	4.3	45.7	0.8	4.9	38.5	0.9	5.5
125	263.3	0.5	1.3	184.1	0.6	1.8	135.6	0.6	2.3	106.0	0.6	2.8	85.1	0.7	3.3	69.3	0.7	3.8	57.1	0.8	4.3	47.6	0.8	4.9	40.1	0.9	5.5
130	273.8	0.5	1.3	191.5	0.6	1.8	141.0	0.6	2.3	110.2	0.6	2.8	88.5	0.7	3.3	72.0	0.7	3.8	59.4	0.8	4.3	49.5	0.8	4.9	41.7	0.9	5.5
135	284.3	0.5	1.3	198.8	0.6	1.8	146.4	0.6	2.3	114.4	0.6	2.8	91.9	0.7	3.3	74.8	0.7	3.8	61.6	0.8	4.3	51.4	0.8	4.9	43.3	0.9	5.5
140	294.9	0.5	1.3	206.2	0.6	1.8	151.8	0.6	2.3	118.7	0.6	2.8	95.3	0.7	3.3	77.6	0.7	3.8	63.9	0.8	4.3	53.3	0.8	4.9	44.9	0.9	5.5
145	305.4	0.5	1.3	213.6	0.6	1.8	157.3	0.6	2.3	122.9	0.6	2.8	98.7	0.7	3.3	80.3	0.7	3.8	66.2	0.8	4.3	55.2	0.8	4.9	46.5	0.9	5.5
150	315.9	0.5	1.3	220.9	0.6	1.8	162.7	0.6	2.3	127.1	0.6	2.8	102.1	0.7	3.3	83.1	0.7	3.8	68.5	0.8	4.3	57.1	0.8	4.9	48.1	0.9	5.5

RETARDANCE "D" AND "C"

NOTE: Width and Depth dimensions are in feet; Velocity measurements are in feet per second:
Depth "D" does not include allowance for freeboard or settlement.

Table DV-15 Parabolic Diversion Design Chart (Retardance "D" and "C", Grade 8.00%)

V1 FOR RETARDANCE "D", TOP WIDTH (T), DEPTH' (D), AND V2 FOR RETARDANCE "C"

Grade 8.00 Percent

Q CFS	V1=2.0			V1=2.5			V1=3.0			V1=3.5			V1=4.0			V1=4.5			V1=5.0			V1=5.5			V1=6.0		
	T	D	V2	T	D	V2	T	D	V2	T	D	V2	T	D	V2	T	D	V2	T	D	V2	T	D	V2	T	D	V2
5	12.0	0.5	1.3	8.5	0.5	1.7	6.2	0.5	2.2	4.6	0.6	2.7	3.7	0.6	3.2	2.9	0.7	3.6									
10	24.1	0.5	1.3	16.9	0.5	1.7	12.6	0.5	2.2	9.6	0.6	2.7	7.8	0.6	3.2	6.3	0.6	3.7	5.1	0.7	4.2	4.2	0.8	4.8	3.2	0.9	5.3
15	36.1	0.5	1.3	25.3	0.5	1.7	18.9	0.5	2.2	14.4	0.6	2.7	11.8	0.6	3.2	9.7	0.6	3.7	7.9	0.7	4.2	6.5	0.7	4.8	5.4	0.8	5.3
20	48.1	0.5	1.3	33.8	0.5	1.7	25.2	0.5	2.2	19.2	0.6	2.7	15.8	0.6	3.2	12.9	0.6	3.7	10.7	0.7	4.2	8.8	0.7	4.8	7.4	0.8	5.3
25	60.1	0.5	1.3	42.2	0.5	1.7	31.5	0.5	2.2	24.0	0.6	2.7	19.7	0.6	3.2	16.2	0.6	3.7	13.4	0.7	4.2	11.2	0.7	4.7	9.3	0.8	5.3
30	72.1	0.5	1.3	50.6	0.5	1.7	37.8	0.5	2.2	28.8	0.6	2.7	23.6	0.6	3.2	19.4	0.6	3.7	16.1	0.7	4.2	13.5	0.7	4.8	11.3	0.7	5.3
35	84.1	0.5	1.3	59.1	0.5	1.7	44.1	0.5	2.2	33.6	0.6	2.7	27.6	0.6	3.2	22.6	0.6	3.7	18.7	0.7	4.2	15.7	0.7	4.8	13.3	0.7	5.3
40	96.2	0.5	1.3	67.5	0.5	1.7	50.4	0.5	2.2	38.4	0.6	2.7	31.5	0.6	3.2	25.8	0.6	3.7	21.4	0.7	4.2	17.9	0.7	4.8	15.2	0.7	5.3
45	108.2	0.5	1.3	76.0	0.5	1.7	56.7	0.5	2.2	43.2	0.6	2.7	35.4	0.6	3.2	29.0	0.6	3.7	24.1	0.7	4.2	20.2	0.7	4.8	17.1	0.7	5.3
50	120.2	0.5	1.3	84.4	0.5	1.7	63.0	0.5	2.2	48.0	0.6	2.7	39.4	0.6	3.2	32.3	0.6	3.7	26.8	0.7	4.2	22.4	0.7	4.8	19.0	0.7	5.3
55	132.2	0.5	1.3	92.8	0.5	1.7	69.3	0.5	2.2	52.8	0.6	2.7	43.3	0.6	3.2	35.5	0.6	3.7	29.4	0.7	4.2	24.7	0.7	4.8	20.9	0.7	5.3
60	144.2	0.5	1.3	101.3	0.5	1.7	75.6	0.5	2.2	57.6	0.6	2.7	47.2	0.6	3.2	38.7	0.6	3.7	32.1	0.7	4.2	26.9	0.7	4.8	22.8	0.7	5.3
65	156.3	0.5	1.3	109.7	0.5	1.7	81.8	0.5	2.2	62.4	0.6	2.7	51.2	0.6	3.2	41.9	0.6	3.7	34.8	0.7	4.2	29.1	0.7	4.8	24.7	0.7	5.3
70	168.3	0.5	1.3	118.2	0.5	1.7	88.1	0.5	2.2	67.2	0.6	2.7	55.1	0.6	3.2	45.2	0.6	3.7	37.5	0.7	4.2	31.4	0.7	4.8	26.6	0.7	5.3
75	180.3	0.5	1.3	126.6	0.5	1.7	94.4	0.5	2.2	72.0	0.6	2.7	59.0	0.6	3.2	48.4	0.6	3.7	40.1	0.7	4.2	33.6	0.7	4.8	28.5	0.7	5.3
80	192.3	0.5	1.3	135.0	0.5	1.7	100.7	0.5	2.2	76.8	0.6	2.7	63.0	0.6	3.2	51.6	0.6	3.7	42.8	0.7	4.2	35.9	0.7	4.8	30.3	0.7	5.3
85	204.3	0.5	1.3	143.5	0.5	1.7	107.0	0.5	2.2	81.6	0.6	2.7	66.9	0.6	3.2	54.9	0.6	3.7	45.5	0.7	4.2	38.1	0.7	4.8	32.2	0.7	5.3
90	216.4	0.5	1.3	151.9	0.5	1.7	113.3	0.5	2.2	86.4	0.6	2.7	70.8	0.6	3.2	58.1	0.6	3.7	48.1	0.7	4.2	40.3	0.7	4.8	34.1	0.7	5.3
95	228.4	0.5	1.3	160.3	0.5	1.7	119.6	0.5	2.2	91.2	0.6	2.7	74.8	0.6	3.2	61.3	0.6	3.7	50.8	0.7	4.2	42.6	0.7	4.8	36.0	0.7	5.3
100	240.4	0.5	1.3	168.8	0.5	1.7	125.9	0.5	2.2	96.0	0.6	2.7	78.7	0.6	3.2	64.5	0.6	3.7	53.5	0.7	4.2	44.8	0.7	4.8	37.9	0.7	5.3
105	252.4	0.5	1.3	177.2	0.5	1.7	132.2	0.5	2.2	100.8	0.6	2.7	82.6	0.6	3.2	67.8	0.6	3.7	56.2	0.7	4.2	47.1	0.7	4.8	39.8	0.7	5.3
110	264.4	0.5	1.3	185.7	0.5	1.7	138.5	0.5	2.2	105.6	0.6	2.7	86.6	0.6	3.2	71.0	0.6	3.7	58.8	0.7	4.2	49.3	0.7	4.8	41.7	0.7	5.3
115	276.5	0.5	1.3	194.1	0.5	1.7	144.8	0.5	2.2	110.4	0.6	2.7	90.5	0.6	3.2	74.2	0.6	3.7	61.5	0.7	4.2	51.5	0.7	4.8	43.6	0.7	5.3
120	288.5	0.5	1.3	202.5	0.5	1.7	151.1	0.5	2.2	115.2	0.6	2.7	94.4	0.6	3.2	77.4	0.6	3.7	64.2	0.7	4.2	53.8	0.7	4.8	45.5	0.7	5.3
125	300.5	0.5	1.3	211.0	0.5	1.7	157.4	0.5	2.2	120.0	0.6	2.7	98.4	0.6	3.2	80.7	0.6	3.7	66.9	0.7	4.2	56.0	0.7	4.8	47.4	0.7	5.3
130	312.5	0.5	1.3	219.4	0.5	1.7	163.7	0.5	2.2	124.8	0.6	2.7	102.3	0.6	3.2	83.9	0.6	3.7	69.5	0.7	4.2	58.3	0.7	4.8	49.3	0.7	5.3
135	324.5	0.5	1.3	227.9	0.5	1.7	170.0	0.5	2.2	129.6	0.6	2.7	106.2	0.6	3.2	87.1	0.6	3.7	72.2	0.7	4.2	60.5	0.7	4.8	51.2	0.7	5.3
140	336.6	0.5	1.3	236.3	0.5	1.7	176.3	0.5	2.2	134.4	0.6	2.7	110.2	0.6	3.2	90.3	0.6	3.7	74.9	0.7	4.2	62.7	0.7	4.8	53.1	0.7	5.3
145	348.6	0.5	1.3	244.7	0.5	1.7	182.6	0.5	2.2	139.2	0.6	2.7	114.1	0.6	3.2	93.6	0.6	3.7	77.6	0.7	4.2	65.0	0.7	4.8	55.0	0.7	5.3
150	360.6	0.5	1.3	253.2	0.5	1.7	188.9	0.5	2.2	144.0	0.6	2.7	118.0	0.6	3.2	96.8	0.6	3.7	80.2	0.7	4.2	67.2	0.7	4.8	56.9	0.7	5.3

RETARDANCE "D" AND "C"

NOTE: Width and Depth dimensions are in feet; Velocity measurements are in feet per second
Depth "D" does not include allowance for freeboard or settlement

Table DV-16 Parabolic Diversion Design Chart (Retardance "D" and "C", Grade 10.00%)

V1 FOR RETARDANCE "D", TOP WIDTH (T), DEPTH (D), AND V2 FOR RETARDANCE "C"

Grade 10.00 Percent

Q CFS	V1=2.0			V1=2.5			V1=3.0			V1=3.5			V1=4.0			V1=4.5			V1=5.0			V1=5.5			V1=6.0		
	T	D	V2	T	D	V2	T	D	V2	T	D	V2	T	D	V2	T	D	V2	T	D	V2	T	D	V2	T	D	V2
5	13.3	0.4	1.3	9.4	0.5	1.7	6.8	0.5	2.2	5.3	0.5	2.6	4.1	0.6	3.2	3.4	0.6	3.6	2.6	0.7	4.1						
10	26.6	0.4	1.3	18.7	0.5	1.7	13.8	0.5	2.2	10.9	0.5	2.6	8.5	0.6	3.2	7.1	0.6	3.6	5.9	0.6	4.1	4.9	0.7	4.7	4.0	0.7	5.3
15	39.9	0.4	1.3	28.0	0.5	1.7	20.7	0.5	2.2	16.3	0.5	2.6	12.8	0.6	3.2	10.9	0.6	3.6	9.0	0.6	4.1	7.5	0.6	4.7	6.3	0.7	5.2
20	53.2	0.4	1.3	37.4	0.5	1.7	27.6	0.5	2.2	21.7	0.5	2.7	17.0	0.6	3.2	14.5	0.6	3.6	12.1	0.6	4.1	10.2	0.6	4.6	8.5	0.7	5.2
25	66.5	0.4	1.3	46.7	0.5	1.7	34.5	0.5	2.2	27.1	0.5	2.7	21.3	0.6	3.2	18.1	0.6	3.6	15.1	0.6	4.1	12.7	0.6	4.7	10.8	0.7	5.2
30	79.8	0.4	1.3	56.1	0.5	1.7	41.4	0.5	2.2	32.5	0.5	2.7	25.5	0.6	3.2	21.7	0.6	3.6	18.1	0.6	4.1	15.2	0.6	4.7	12.9	0.7	5.2
35	93.1	0.4	1.3	65.4	0.5	1.7	48.3	0.5	2.2	37.9	0.5	2.7	29.8	0.6	3.2	25.3	0.6	3.6	21.1	0.6	4.1	17.8	0.6	4.7	15.1	0.7	5.2
40	106.4	0.4	1.3	74.7	0.5	1.7	55.2	0.5	2.2	43.3	0.5	2.7	34.0	0.6	3.2	29.0	0.6	3.6	24.1	0.6	4.1	20.3	0.6	4.7	17.2	0.7	5.2
45	119.7	0.4	1.3	84.1	0.5	1.7	62.1	0.5	2.2	48.8	0.5	2.7	38.3	0.6	3.2	32.6	0.6	3.6	27.2	0.6	4.1	22.8	0.6	4.7	19.4	0.7	5.2
50	133.0	0.4	1.3	93.4	0.5	1.7	69.0	0.5	2.2	54.2	0.5	2.7	42.5	0.6	3.2	36.2	0.6	3.6	30.2	0.6	4.1	25.4	0.6	4.7	21.5	0.7	5.2
55	146.3	0.4	1.3	102.8	0.5	1.7	75.9	0.5	2.2	59.6	0.5	2.7	46.8	0.6	3.2	39.8	0.6	3.6	33.2	0.6	4.1	27.9	0.6	4.7	23.7	0.7	5.2
60	159.6	0.4	1.3	112.1	0.5	1.7	82.8	0.5	2.2	65.0	0.5	2.7	51.0	0.6	3.2	43.4	0.6	3.6	36.2	0.6	4.1	30.5	0.6	4.7	25.9	0.7	5.2
65	172.9	0.4	1.3	121.4	0.5	1.7	89.7	0.5	2.2	70.4	0.5	2.7	55.3	0.6	3.2	47.1	0.6	3.6	39.2	0.6	4.1	33.0	0.6	4.7	28.0	0.7	5.2
70	186.2	0.4	1.3	130.8	0.5	1.7	96.6	0.5	2.2	75.8	0.5	2.7	59.5	0.6	3.2	50.7	0.6	3.6	42.2	0.6	4.1	35.5	0.6	4.7	30.2	0.7	5.2
75	199.5	0.4	1.3	140.1	0.5	1.7	103.5	0.5	2.2	81.2	0.5	2.7	63.8	0.6	3.2	54.3	0.6	3.6	45.2	0.6	4.1	38.1	0.6	4.7	32.3	0.7	5.2
80	212.8	0.4	1.3	149.5	0.5	1.7	110.5	0.5	2.2	86.7	0.5	2.7	68.0	0.6	3.2	57.9	0.6	3.6	48.3	0.6	4.1	40.6	0.6	4.7	34.5	0.7	5.2
85	226.1	0.4	1.3	158.8	0.5	1.7	117.4	0.5	2.2	92.1	0.5	2.7	72.3	0.6	3.2	61.5	0.6	3.6	51.3	0.6	4.1	43.1	0.6	4.7	36.6	0.7	5.2
90	239.4	0.4	1.3	168.1	0.5	1.7	124.3	0.5	2.2	97.5	0.5	2.7	76.5	0.6	3.2	65.2	0.6	3.6	54.3	0.6	4.1	45.7	0.6	4.7	38.8	0.7	5.2
95	252.7	0.4	1.3	177.5	0.5	1.7	131.2	0.5	2.2	102.9	0.5	2.7	80.8	0.6	3.2	68.8	0.6	3.6	57.3	0.6	4.1	48.2	0.6	4.7	40.9	0.7	5.2
100	266.0	0.4	1.3	186.8	0.5	1.7	138.1	0.5	2.2	108.3	0.5	2.7	85.0	0.6	3.2	72.4	0.6	3.6	60.3	0.6	4.1	50.7	0.6	4.7	43.1	0.7	5.2
105	279.3	0.4	1.3	196.2	0.5	1.7	145.0	0.5	2.2	113.7	0.5	2.7	89.3	0.6	3.2	76.0	0.6	3.6	63.3	0.6	4.1	53.3	0.6	4.7	45.2	0.7	5.2
110	292.6	0.4	1.3	205.5	0.5	1.7	151.9	0.5	2.2	119.2	0.5	2.7	93.5	0.6	3.2	79.6	0.6	3.6	66.4	0.6	4.1	55.8	0.6	4.7	47.4	0.7	5.2
115	305.9	0.4	1.3	214.9	0.5	1.7	158.8	0.5	2.2	124.6	0.5	2.7	97.8	0.6	3.2	83.3	0.6	3.6	69.4	0.6	4.1	58.3	0.6	4.7	49.5	0.7	5.3
120	319.2	0.4	1.3	224.2	0.5	1.7	165.7	0.5	2.2	130.0	0.5	2.7	102.0	0.6	3.2	86.9	0.6	3.6	72.4	0.6	4.1	60.9	0.6	4.7	51.7	0.7	5.3
125	332.5	0.4	1.3	233.5	0.5	1.7	172.6	0.5	2.2	135.4	0.5	2.7	106.3	0.6	3.2	90.5	0.6	3.6	75.4	0.6	4.1	63.4	0.6	4.7	53.8	0.7	5.3
130	345.8	0.4	1.3	242.9	0.5	1.7	179.5	0.5	2.2	140.8	0.5	2.7	110.5	0.6	3.2	94.1	0.6	3.6	78.4	0.6	4.1	66.0	0.6	4.7	56.0	0.7	5.3
135	359.1	0.4	1.3	252.2	0.5	1.7	186.4	0.5	2.2	146.2	0.5	2.7	114.8	0.6	3.2	97.7	0.6	3.6	81.4	0.6	4.1	68.5	0.6	4.7	58.1	0.7	5.3
140	372.4	0.4	1.3	261.6	0.5	1.7	193.3	0.5	2.2	151.7	0.5	2.7	119.0	0.6	3.2	101.3	0.6	3.6	84.4	0.6	4.1	71.0	0.6	4.7	60.3	0.7	5.3
145	385.7	0.4	1.3	270.9	0.5	1.7	200.2	0.5	2.2	157.1	0.5	2.7	123.3	0.6	3.2	105.0	0.6	3.6	87.5	0.6	4.1	73.6	0.6	4.7	62.5	0.7	5.3
150	399.0	0.4	1.3	280.2	0.5	1.7	207.1	0.5	2.2	162.5	0.5	2.7	127.5	0.6	3.2	108.6	0.6	3.6	90.5	0.6	4.1	76.1	0.6	4.7	64.6	0.7	5.3

RETARDANCE "D" AND "C"

NOTE: Width and Depth dimensions are in feet; Velocity measurements are in feet per second; Depth "D" does not include allowance for freeboard or settlement.

G. Grass Swale (GS)

Grass Swale (GS)

Practice Description

A grass swale is a natural or constructed channel that is shaped or graded to required dimensions and established in suitable vegetation for the stable conveyance of runoff without causing damage to the channel by erosion. This practice applies to sites where concentrated runoff will cause erosion damage, a vegetative lining provides sufficient stability for the channel as designed, and space is available for a relatively large cross section. Typical situations where concentrated flow areas are addressed with a grass swale include roadside ditches, channels at property boundaries, outlets for diversions and other concentrated flow areas subject to channel erosion. Grassed swales are generally considered permanent structures but may be used as a temporary measure.

Planning Considerations

Grass swales should be carefully built to the design cross section, shape and dimensions. Swales are hydraulic structures and as such depend upon the hydraulic parameters to function satisfactorily. Vegetated swales should be well established before large flows are permitted in the channel.

The design of a channel cross section and lining is based primarily upon the volume and velocity of flow expected in the channel. This practice covers grassed swales with low velocity flows (generally less than 5 ft/sec). Where high

velocities are anticipated lined swales should be used (see Lined Swale practice or Riprap-lined Swale practice). Lined swales should also be used where there is continuous flow in the swale, which would prevent establishment of vegetation within the flow area.

Besides the primary design considerations of capacity and velocity, a number of other important factors should be taken into account when selecting a cross section (Figure GS-1). These factors include land availability, compatibility with land use and surrounding environment, safety, maintenance requirements outlet conditions, etc.

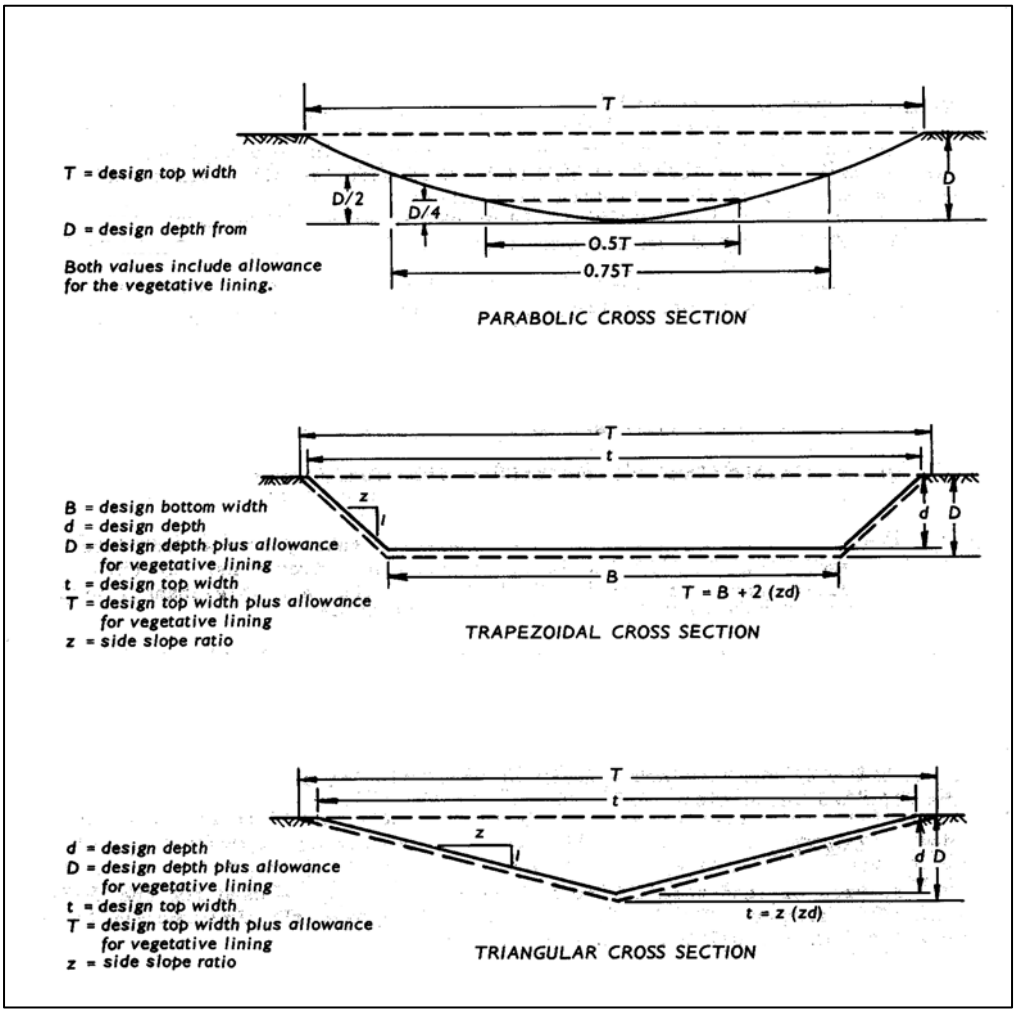

Figure GS-1 Typical Grass Swale Cross section

Triangular Shaped Ditches

Triangular shaped ditches are generally used where the quantity of water to be handled is relatively small, such as along roadsides. A triangular grass swale will suffice where velocities in the ditch are low.

Parabolic Channels

Parabolic channels are often used where the quantity of water to be handled is larger and where space is available for a wide, shallow channel with low velocity flow.

Trapezoidal Channels

Trapezoidal channels are often used where the quantity of water to be carried is large and conditions require that it be carried at a relatively high velocity. Trapezoidal ditches are generally lined with concrete or riprap, but in some cases can be grassed swales, if lined with erosion control blankets (see Erosion Control Blanket practice).

Other Considerations

Outlet conditions for all channels should be considered. Appropriate measures must be taken to dissipate the energy of the flow to prevent scour at the outlet of the swale.

Grass swales should be protected from erosion by concentrated flows. The methods of protecting grass swales would include, but not be limited to the following:

- Vegetation.
- Biodegradable linings and vegetation.

The type and intensity of the protective linings will determine the design of the grass swale.

If velocities exceed stable velocities, for vegetated swales or vegetation with biodegradable linings, then other linings should be used (see Lined Swale or Riprap-lined Swale practice).

The time of the year should be considered when planning grass swales. Grass swales that are seeded to establish vegetation should not be planned for construction during late fall, winter or early spring. Grass swales constructed during mid-summer to early fall may need temporary seeding followed by permanent seeding at the recommended times. The vegetation species should be recommended for the area of the state that it is planned.

Design Criteria

Capacity

Grass swales shall be designed to convey the peak rate of runoff as shown in Table GS-1. Adjustments should be made for release rates from structures and other drainage facilities. Grass swales shall also be designed to comply with local stormwater ordinances. Grass swales should be designed for greater capacity whenever there is danger of flooding or out of bank flow cannot be tolerated.

Table GS-1 Design Frequency for Grassed Swale

Grass Swale Type	Typical Area of Protection	24 Hour Design Storm Frequency
Temporary	Construction Areas	2-year
	Building Sites	5-year
Permanent	Agricultural Land	10-year
	Mined Reclamation Area	10-year
	Recreation Areas	10-year
	Isolated Buildings	10-year
	Urban areas, Residential, School, Industrial Areas, etc.	10-year

Peak rates of runoff values used to determine the capacity requirements should be calculated using accepted engineering methods. Some accepted methods are:

- Natural Resources Conservation Service, National Engineering Handbook Series, Part 650, Engineering Field Handbook, Chapter 2, Estimating Runoff.
- Natural Resources Conservation Service formerly Soil Conservation Service, Technical Release 55, Urban Hydrology for Small Watersheds.
- Natural Resources Conservation Service, Alabama Engineering Field (Design) Manual, Chapter 2 on Estimating Runoff.
- Other comparable methods.

Grade of Grass Swale

After selecting a location for the grassed swale that will minimize the impacts to the site and maximize the intended use, the grade in the grass swales should be determined. The grade in feet per 100 feet of length can be determined from a topographic map of the site or from a detailed survey of the planned grassed swale location.

Retardance

The type grass used to vegetate the grassed swale and the degree of maintenance planned for the vegetation determines the retardance of the swale (see Table GS-2).

Generally, the retardance used for the design of grassed swales should be "D" and "C" to produce a stable velocity and adequate capacity to carry the design storm.

Table GS-2 Retardance for Grassed Swales

Retardance	Species	Cover Condition
A	Reed Canarygrass	Excellent stand, tall (average 36")
	Yellow Bluestem Ischaemum	Excellent stand, tall (average 36")
B	Smooth Bromegrass	Good stand, mowed (average 12 to 15")
	Bermudagrass	Good stand, tall (average 12)
	Native Grass mixture (Little Bluestem, Blue Grama, and other long and short Midwest Grasses)	Good stand, unmowed
	Tall Fescue	Good stand, unmowed (average 18")
	Lespedeza Sericea	Good stand, not woody, tall (average 19")
	Grass-Legume mixture-Timothy, smooth Bromegrass, or Orchardgrass	Good stand, uncut (average 20")
	Reed Canarygrass	Good stand, mowed (average 12 to 15")
	Tall Fescue, with Bird's Foot Trefoil or Ladino Clover	Good stand, uncut (average 18")
	Blue Grama	Good stand, uncut (average 13")
C	Bahiagrass	Good stand, uncut (average 6 to 8")
	Bermudagrass	Good stand, mowed (average 6")
	Redtop	Good stand, headed (15 to 20)
	Grass-legume mixture-summer (Orchardgrass, Redtop, Italian Ryegrass, and Common Lespedeza)	Good stand, uncut (6 to 8")
	Centipedegrass	Very dense cover (average 6")
	Kentucky Bluegrass	Good stand, headed (6 to 12")
D	Bermudagrass	Good stand, cut to 2.5" height
	Red Fescue	Good stand, headed (12 to 18")
	Buffalograss	Good stand, uncut (3 to 6")
	Grass-Legume mixture-fall, spring (Orchard Grass, Redtop, Italian Ryegrass, and Common Lespedeza)	Good stand, uncut (4 to 5")
	Lespedeza Sericea	After cutting to 2" height. Very good stand before cutting
E	Bermudagrass	Good stand, cut to 1.5" height.
	Bermudagrass	Burned stubble

Velocities

Classify the soil where the swale is to be constructed into erosion resistant cohesive (clayey) fine and coarse grained soils or easily eroded noncohesive silt, clays and sands.

Determine the type of vegetative cover to be established in the swale.

Use the swale grade, cover and soil erodibility to determine permissible velocity using Table GS-3.

Swale Dimensions

The swale may be triangular shaped, parabolic or trapezoidal as discussed in the planning considerations of this standard and shown in Figure GS-1.

Using the peak discharge, swale grade, permissible velocity and retardance, parabolic dimensions can be determined using Table GS-4, Sheets 1 through 14.

Table GS-3 Permissible Velocities in Grassed Swales

Cover	Slope Range[2]	**Permissible Velocity[1]** Erosion Resistant Soils[3] (clayey)	Easily Eroded Soils[4] (sandy)
	percent	ft/sec	ft/sec
Bermudagrass	< 5	8	6
	5-10	7	4
	over 10	6	3
Bahiagrass	<5	7	5
Tall Fescue	5-10	6	4
	over 10	5	3
Sericea Lespedeza **Weeping Lovegrass**	<5[5]	3.5	2.5

[1]Use velocities exceeding (5ft/sec) only where good covers and proper maintenance can be obtained.
[2]Do not use on slopes steeper than 10 percent except for vegetated side slopes in combination with a stone, concrete, or highly resistant vegetative center section.
[3]Cohesive (clayey) fine-grain soils and coarse-grain soils with cohesive fines with a plasticity index of 10 to 40 (CL, CH, SC, and CG).
[4] Soils that do not meet requirements for erosion-resistant soils.
[5] Do not use on slopes steeper than 5 percent except for vegetated side slopes in combination with a stone, concrete, or highly resistant vegetative center section.

Design dimensions for triangular shaped and trapezoidal shaped swales can be determined using Manning's equation or other accepted engineering designs.

The design water surface elevation of a channel receiving water from other tributary sources shall be equal to or less than the design water surface elevation of the contributing source. The design water surface elevation of contributing and receiving waters should be the same, whenever practical.

A minimum depth may be necessary to provide adequate outlets for subsurface drains and tributary channels.

Drainage

Polyethylene drainage tubing, tile or other suitable subsurface drainage measures shall be provided for sites having high water tables or seepage problems.

Freeboard

The minimum freeboard is 0.25 feet in depth. Freeboard is not required on grass swales with less than 1% slope and where out-of-bank flow will not be damaging and can be tolerated in the normal operation at the site.

Table GS-4 Parabolic Grass Swale Design Sheet 1 of 14

V1 FOR RETARDANCE "D", TOP WIDTH (T), DEPTH (D), AND V2 FOR RETARDANCE "C"

Grade 0.25 Percent

Q CFS	V1=2.0			V1=2.5			V1=3.0			V1=3.5			V1=4.0			V1=4.5			V1=5.0			V1=5.5			V1=6.0		
	T	D	V2	T	D	V2	T	D	V2	T	D	V2	T	D	V2	T	D	V2	T	D	V2	T	D	V2	T	D	V2
5																											
10																											
15																											
20																											
25	9.3	2.3	1.7																								
30	11.7	2.2	1.8																								
35	14.1	2.1	1.7																								
40	16.3	2.1	1.8																								
45	18.5	2.1	1.8	10.4	2.8	2.3																					
50	20.7	2.1	1.8	12.3	2.6	2.3																					
55	22.9	2.1	1.8	13.8	2.6	2.3																					
60	25.0	2.0	1.8	15.3	2.5	2.3																					
65	27.2	2.0	1.8	16.8	2.5	2.3	10.4	3.4	2.8																		
70	29.3	2.0	1.8	18.2	2.5	2.3	12.1	3.1	2.8																		
75	31.9	2.0	1.7	19.7	2.4	2.3	13.5	3.0	2.8																		
80	34.0	2.0	1.7	21.1	2.4	2.3	14.7	2.9	2.8																		
85	36.1	2.0	1.7	22.5	2.4	2.3	15.8	2.9	2.8																		
90	38.2	2.0	1.7	23.9	2.4	2.3	16.9	2.8	2.8																		
95	40.3	2.0	1.7	25.3	2.4	2.3	18.0	2.8	2.8																		
100	42.4	2.0	1.7	26.7	2.4	2.3	19.1	2.8	2.8																		
105	44.6	2.0	1.7	28.1	2.4	2.3	20.2	2.8	2.8																		
110	46.7	2.0	1.7	29.5	2.4	2.3	21.3	2.8	2.8	12.9	3.8	3.4															
115	48.8	2.0	1.7	30.8	2.4	2.3	22.3	2.8	2.8	14.0	3.7	3.4															
120	50.9	2.0	1.7	32.2	2.4	2.3	23.4	2.8	2.8	15.3	3.5	3.4															
125	53.0	2.0	1.8	33.6	2.4	2.3	24.4	2.8	2.8	16.1	3.5	3.4															
130	55.1	2.0	1.8	35.0	2.4	2.3	25.5	2.8	2.8	16.9	3.4	3.4															
135	57.3	2.0	1.8	36.4	2.4	2.3	26.5	2.7	2.8	17.7	3.4	3.4															
140	59.4	2.0	1.8	38.3	2.4	2.3	27.6	2.7	2.8	18.5	3.4	3.4															
145	61.5	2.0	1.8	39.7	2.4	2.3	28.6	2.7	2.8	19.3	3.3	3.4															
150	63.6	2.0	1.8	41.1	2.4	2.3	29.6	2.7	2.8	20.1	3.3	3.4															

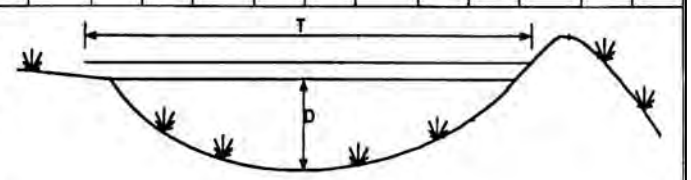

T = Top width, tall vegetation
D = Depth, tall vegetation
V2 = Design velocity, tall vegetation
V1 = Permissible velocity, short vegetation

RETARDANCE "D" AND "C"

NOTE: Width and Depth dimensions are in feet; Velocity measurements are in feet per second; Depth "D" does not include allowance for freeboard or settlement.

Table GS-4 Parabolic Grass Swale Design Sheet 2 of 14

V1 FOR RETARDANCE "D", TOP WIDTH (T), DEPTH (D), AND V2 FOR RETARDANCE "C"

Grade 0.50 Percent

Q CFS	V1=2.0			V1=2.5			V1=3.0			V1=3.5			V1=4.0			V1=4.5			V1=5.0			V1=5.5			V1=6.0		
	T	D	V2	T	D	V2	T	D	V2	T	D	V2	T	D	V2	T	D	V2	T	D	V2	T	D	V2	T	D	V2
5																											
10																											
15	8.4	1.6	1.7																								
20	11.7	1.5	1.7	7.1	2.0	2.2																					
25	14.9	1.5	1.7	9.7	1.8	2.2																					
30	18.0	1.5	1.7	12.0	1.7	2.2																					
35	21.0	1.5	1.7	14.2	1.7	2.2	9.3	2.1	2.7																		
40	24.4	1.5	1.7	16.3	1.7	2.2	10.9	2.0	2.7																		
45	27.4	1.5	1.7	18.5	1.7	2.2	12.5	2.0	2.7																		
50	30.5	1.5	1.7	20.6	1.7	2.2	14.1	1.9	2.7	8.7	2.6	3.3															
55	33.5	1.5	1.7	22.7	1.7	2.2	15.7	1.9	2.7	10.4	2.4	3.3															
60	36.6	1.5	1.7	24.8	1.7	2.2	17.2	1.9	2.7	11.7	2.3	3.3															
65	39.6	1.5	1.7	27.3	1.7	2.2	18.8	1.9	2.7	12.9	2.3	3.3															
70	42.6	1.5	1.7	29.4	1.7	2.2	20.3	1.9	2.7	14.0	2.2	3.3	9.8	2.8	3.8												
75	45.7	1.5	1.7	31.4	1.7	2.2	21.8	1.9	2.7	15.2	2.2	3.3	11.3	2.7	3.8												
80	48.7	1.5	1.7	33.5	1.7	2.2	23.3	1.9	2.7	16.3	2.2	3.3	12.2	2.6	3.8												
85	51.7	1.5	1.7	35.6	1.6	2.2	24.8	1.9	2.7	17.4	2.2	3.3	13.2	2.5	3.8												
90	54.8	1.5	1.7	37.7	1.6	2.2	26.3	1.9	2.7	18.5	2.2	3.3	14.2	2.5	3.8												
95	57.8	1.5	1.7	39.8	1.6	2.2	27.8	1.9	2.7	19.6	2.2	3.3	15.1	2.5	3.8												
100	60.9	1.5	1.7	41.9	1.6	2.2	29.7	1.9	2.7	20.7	2.2	3.3	16.0	2.5	3.8	11.0	3.2	4.3									
105	63.9	1.5	1.7	44.0	1.6	2.2	31.2	1.9	2.7	21.8	2.2	3.3	16.9	2.5	3.8	12.3	3.0	4.3									
110	66.9	1.5	1.7	46.1	1.6	2.2	32.6	1.9	2.7	22.9	2.2	3.3	17.8	2.4	3.8	13.1	2.9	4.3									
115	70.0	1.5	1.7	48.1	1.6	2.2	34.1	1.9	2.7	24.0	2.1	3.3	18.7	2.4	3.8	13.9	2.9	4.3									
120	73.0	1.5	1.7	50.2	1.6	2.2	35.6	1.9	2.7	25.1	2.1	3.3	19.6	2.4	3.8	14.6	2.9	4.3									
125	76.1	1.5	1.7	52.3	1.6	2.2	37.1	1.9	2.7	26.2	2.1	3.3	20.5	2.4	3.8	15.4	2.8	4.3									
130	79.1	1.5	1.7	54.4	1.6	2.2	38.5	1.9	2.7	27.3	2.1	3.3	21.3	2.4	3.8	16.1	2.8	4.3									
135	82.1	1.5	1.7	56.5	1.6	2.2	40.0	1.9	2.7	28.4	2.1	3.3	22.2	2.4	3.8	16.9	2.8	4.3									
140	85.2	1.5	1.7	58.6	1.6	2.2	41.5	1.9	2.7	29.4	2.1	3.3	23.1	2.4	3.8	17.6	2.8	4.3									
145	88.2	1.5	1.7	60.7	1.6	2.2	43.0	1.9	2.7	30.5	2.1	3.3	24.0	2.4	3.8	18.3	2.8	4.3	12.3	3.7	4.9						
150	91.3	1.5	1.7	62.8	1.6	2.2	44.5	1.9	2.7	31.6	2.1	3.3	24.8	2.4	3.8	19.0	2.7	4.3	13.1	3.5	4.9						

RETARDANCE "D" AND "C"

NOTE: Width and Depth dimensions are in feet; Velocity measurements are in feet per second; Depth "D" does not include allowance for freeboard or settlement.

Table GS-4 Parabolic Grass Swale Design Sheet 3 of 14

V1 FOR RETARDANCE "D", TOP WIDTH (T), DEPTH (D), AND V2 FOR RETARDANCE "C"

Grade 0.75 Percent

Q CFS	V1=2.0			V1=2.5			V1=3.0			V1=3.5			V1=4.0			V1=4.5			V1=5.0			V1=5.5			V1=6.0		
	T	D	V2	T	D	V2	T	D	V2	T	D	V2	T	D	V2	T	D	V2	T	D	V2	T	D	V2	T	D	V2
5																											
10	7.0	1.3	1.6																								
15	11.0	1.3	1.6	7.1	1.5	2.1																					
20	14.9	1.3	1.6	9.9	1.4	2.1	6.1	1.9	2.6																		
25	18.9	1.2	1.6	12.7	1.4	2.1	8.6	1.6	2.7																		
30	22.7	1.2	1.6	15.3	1.4	2.1	10.6	1.6	2.6	6.7	2.1	3.2															
35	26.5	1.2	1.6	18.0	1.4	2.1	12.6	1.6	2.7	8.7	1.9	3.2															
40	30.2	1.2	1.6	20.6	1.4	2.1	14.5	1.6	2.7	10.3	1.8	3.2															
45	34.0	1.2	1.6	23.5	1.4	2.1	16.4	1.5	2.7	11.8	1.8	3.2	7.8	2.3	3.8												
50	37.8	1.2	1.6	26.1	1.4	2.1	18.3	1.5	2.7	13.2	1.8	3.2	9.5	2.1	3.8												
55	41.5	1.2	1.6	28.7	1.4	2.1	20.2	1.5	2.7	14.7	1.7	3.2	10.7	2.0	3.8												
60	45.3	1.2	1.6	31.3	1.4	2.1	22.1	1.5	2.7	16.1	1.7	3.2	11.8	2.0	3.8												
65	49.1	1.2	1.6	33.9	1.4	2.1	24.3	1.5	2.6	17.6	1.7	3.2	13.0	2.0	3.8	8.5	2.6	4.4									
70	52.9	1.2	1.6	36.5	1.4	2.1	26.2	1.5	2.6	19.0	1.7	3.2	14.1	2.0	3.8	10.0	2.4	4.3									
75	56.6	1.2	1.6	39.1	1.4	2.1	28.0	1.5	2.6	20.4	1.7	3.2	15.2	2.0	3.8	11.0	2.4	4.4									
80	60.4	1.2	1.6	41.7	1.4	2.1	29.9	1.5	2.6	21.8	1.7	3.2	16.3	1.9	3.8	11.9	2.3	4.4									
85	64.2	1.2	1.6	44.3	1.4	2.1	31.8	1.5	2.6	23.2	1.7	3.2	17.4	1.9	3.8	12.8	2.3	4.4	9.1	2.9	4.8						
90	67.9	1.2	1.6	46.9	1.4	2.1	33.6	1.5	2.6	24.6	1.7	3.2	18.5	1.9	3.8	13.7	2.3	4.4	10.3	2.7	4.8						
95	71.7	1.2	1.6	49.5	1.4	2.1	35.5	1.5	2.6	26.0	1.7	3.2	19.6	1.9	3.8	14.6	2.2	4.4	11.4	2.6	4.8						
100	75.5	1.2	1.6	52.1	1.4	2.1	37.3	1.5	2.6	27.8	1.7	3.2	20.7	1.9	3.8	15.4	2.2	4.4	12.2	2.6	4.8						
105	79.3	1.2	1.6	54.7	1.4	2.1	39.2	1.5	2.6	29.1	1.7	3.2	21.8	1.9	3.8	16.3	2.2	4.4	12.9	2.5	4.8						
110	83.0	1.2	1.6	57.3	1.4	2.1	41.1	1.5	2.6	30.5	1.7	3.2	22.8	1.9	3.8	17.2	2.2	4.4	13.7	2.5	4.8						
115	86.8	1.2	1.6	59.9	1.4	2.1	42.9	1.5	2.6	31.9	1.7	3.2	23.9	1.9	3.8	18.0	2.2	4.4	14.4	2.5	4.8	10.5	3.1	5.3			
120	90.6	1.2	1.6	62.5	1.4	2.1	44.8	1.5	2.7	33.3	1.7	3.2	25.0	1.9	3.8	18.9	2.2	4.4	15.2	2.5	4.8	11.4	3.0	5.3			
125	94.3	1.2	1.6	65.1	1.4	2.1	46.7	1.5	2.7	34.7	1.7	3.2	26.0	1.9	3.8	19.7	2.2	4.4	15.9	2.4	4.8	12.4	2.9	5.3			
130	98.1	1.2	1.6	67.7	1.4	2.1	48.5	1.5	2.7	36.0	1.7	3.2	27.1	1.9	3.8	20.5	2.2	4.4	16.6	2.4	4.8	13.0	2.8	5.3			
135	101.9	1.2	1.6	70.3	1.4	2.1	50.4	1.5	2.7	37.4	1.7	3.2	28.2	1.9	3.8	21.4	2.2	4.4	17.3	2.4	4.8	13.7	2.8	5.3			
140	105.7	1.2	1.6	72.9	1.4	2.1	52.2	1.5	2.7	38.8	1.7	3.2	29.3	1.9	3.8	22.2	2.2	4.4	18.0	2.4	4.9	14.3	2.8	5.3			
145	109.4	1.2	1.6	75.5	1.4	2.1	54.1	1.5	2.7	40.2	1.7	3.2	30.8	1.9	3.7	23.1	2.2	4.4	18.7	2.4	4.9	14.9	2.7	5.3			
150	113.2	1.2	1.6	78.1	1.4	2.1	56.0	1.5	2.7	41.6	1.7	3.2	31.9	1.9	3.7	23.9	2.1	4.4	19.4	2.4	4.9	15.5	2.7	5.3			

RETARDANCE "D" AND "C"

NOTE: Width and Depth dimensions are in feet; Velocity measurements are in feet per second; Depth "D" does not include allowance for freeboard or settlement.

Table GS-4 Parabolic Grass Swale Design Sheet 4 of 14

V1 FOR RETARDANCE "D", TOP WIDTH (T), DEPTH (D), AND V2 FOR RETARDANCE "C"

Grade 1.00 Percent

Q CFS	V1=2.0			V1=2.5			V1=3.0			V1=3.5			V1=4.0			V1=4.5			V1=5.0			V1=5.5			V1=6.0		
	T	D	V2	T	D	V2	T	D	V2	T	D	V2	T	D	V2	T	D	V2	T	D	V2	T	D	V2	T	D	V2
5																											
10	8.2	1.2	1.6	5.2	1.4	2.0																					
15	12.6	1.1	1.6	8.7	1.3	2.1	5.5	1.6	2.6																		
20	17.1	1.1	1.6	11.8	1.2	2.1	8.2	1.4	2.6																		
25	21.4	1.1	1.6	14.9	1.2	2.1	10.5	1.4	2.6	7.3	1.6	3.1															
30	25.7	1.1	1.6	18.0	1.2	2.1	12.8	1.4	2.6	9.1	1.6	3.2															
35	29.9	1.1	1.6	21.2	1.2	2.1	15.0	1.3	2.6	10.9	1.5	3.1	7.8	1.8	3.7												
40	34.2	1.1	1.6	24.3	1.2	2.1	17.3	1.3	2.6	12.6	1.5	3.1	9.2	1.7	3.7												
45	38.5	1.1	1.6	27.3	1.2	2.1	19.5	1.3	2.6	14.3	1.5	3.1	10.6	1.7	3.7	7.2	2.2	4.3									
50	42.7	1.1	1.6	30.3	1.2	2.1	21.9	1.3	2.6	16.0	1.5	3.2	11.9	1.7	3.7	8.8	2.0	4.3									
55	47.0	1.1	1.6	33.3	1.2	2.1	24.1	1.3	2.6	17.7	1.5	3.2	13.3	1.7	3.7	9.9	1.9	4.3									
60	51.3	1.1	1.6	36.3	1.2	2.1	26.3	1.3	2.6	19.3	1.5	3.2	14.6	1.7	3.7	11.0	1.9	4.3									
65	55.5	1.1	1.6	39.4	1.2	2.1	28.5	1.3	2.6	21.0	1.5	3.2	15.9	1.6	3.7	12.1	1.9	4.3	8.0	2.5	4.9						
70	59.8	1.1	1.6	42.4	1.2	2.1	30.7	1.3	2.6	22.7	1.5	3.2	17.1	1.6	3.7	13.2	1.9	4.3	9.5	2.3	4.8						
75	64.1	1.1	1.6	45.4	1.2	2.1	32.9	1.3	2.6	24.6	1.5	3.1	18.5	1.6	3.7	14.2	1.8	4.3	10.4	2.2	4.9						
80	68.3	1.1	1.6	48.4	1.2	2.1	35.0	1.3	2.6	26.2	1.5	3.1	19.8	1.6	3.7	15.2	1.8	4.3	11.3	2.2	4.9						
85	72.6	1.1	1.6	51.5	1.2	2.1	37.2	1.3	2.6	27.9	1.5	3.1	21.0	1.6	3.7	16.3	1.8	4.3	12.1	2.2	4.9	8.8	2.7	5.4			
90	76.9	1.1	1.6	54.5	1.2	2.1	39.4	1.3	2.6	29.5	1.5	3.1	22.3	1.6	3.7	17.3	1.8	4.3	13.0	2.1	4.9	9.8	2.6	5.4			
95	81.1	1.1	1.6	57.5	1.2	2.1	41.6	1.3	2.6	31.1	1.5	3.1	23.6	1.6	3.7	18.3	1.8	4.3	13.8	2.1	4.9	10.9	2.5	5.3			
100	85.4	1.1	1.6	60.5	1.2	2.1	43.8	1.3	2.6	32.7	1.5	3.1	24.9	1.6	3.7	19.3	1.8	4.3	14.6	2.1	4.9	11.6	2.4	5.4			
105	89.7	1.1	1.6	63.6	1.2	2.1	46.0	1.3	2.6	34.4	1.5	3.1	26.5	1.6	3.7	20.3	1.8	4.3	15.4	2.1	4.9	12.4	2.4	5.4	9.7	2.8	5.8
110	94.0	1.1	1.6	66.6	1.2	2.1	48.2	1.3	2.6	36.0	1.5	3.1	27.7	1.6	3.7	21.3	1.8	4.3	16.2	2.1	4.9	13.1	2.4	5.4	10.8	2.6	5.8
115	98.2	1.1	1.6	69.6	1.2	2.1	50.4	1.3	2.6	37.6	1.5	3.1	29.0	1.6	3.7	22.3	1.8	4.3	17.0	2.1	4.9	13.8	2.3	5.4	11.5	2.6	5.8
120	102.5	1.1	1.6	72.6	1.2	2.1	52.5	1.3	2.6	39.3	1.5	3.1	30.2	1.6	3.7	23.3	1.8	4.3	17.9	2.1	4.9	14.5	2.3	5.4	12.2	2.6	5.8
125	106.8	1.1	1.6	75.7	1.2	2.1	54.7	1.3	2.6	40.9	1.5	3.1	31.5	1.6	3.7	24.3	1.8	4.3	18.7	2.1	4.9	15.2	2.3	5.4	12.8	2.5	5.8
130	111.0	1.1	1.6	78.7	1.2	2.1	56.9	1.3	2.6	42.5	1.5	3.1	32.7	1.6	3.7	25.3	1.8	4.3	19.4	2.1	4.9	15.9	2.3	5.4	13.4	2.5	5.8
135	115.3	1.1	1.6	81.7	1.2	2.1	59.1	1.3	2.6	44.2	1.5	3.1	34.0	1.6	3.7	26.3	1.8	4.3	20.2	2.0	4.9	16.6	2.3	5.4	14.1	2.5	5.8
140	119.6	1.1	1.6	84.7	1.2	2.1	61.3	1.3	2.6	45.8	1.5	3.1	35.2	1.6	3.7	27.3	1.8	4.3	21.0	2.0	4.9	17.2	2.3	5.4	14.7	2.5	5.8
145	123.8	1.1	1.6	87.8	1.2	2.1	63.5	1.3	2.6	47.5	1.5	3.1	36.5	1.6	3.7	28.7	1.8	4.3	21.8	2.0	4.9	17.9	2.3	5.4	15.3	2.5	5.8
150	128.1	1.1	1.6	90.8	1.2	2.1	65.7	1.3	2.6	49.1	1.5	3.1	37.8	1.6	3.7	29.7	1.8	4.3	22.6	2.0	4.9	18.6	2.3	5.4	15.9	2.4	5.8

RETARDANCE "D" AND "C"

NOTE: Width and Depth dimensions are in feet; Velocity measurements are in feet per second; Depth "D" does not include allowance for freeboard or settlement.

Table GS-4 Parabolic Grass Swale Design Sheet 5 of 14

V1 FOR RETARDANCE "D", TOP WIDTH (T), DEPTH (D), AND V2 FOR RETARDANCE "C"

Grade 1.25 Percent

Q CFS	V1=2.0			V1=2.5			V1=3.0			V1=3.5			V1=4.0			V1=4.5			V1=5.0			V1=5.5			V1=6.0		
	T	D	V2	T	D	V2	T	D	V2	T	D	V2	T	D	V2	T	D	V2	T	D	V2	T	D	V2	T	D	V2
5	4.1	1.2	1.5																								
10	9.4	1.0	1.5	6.3	1.2	2.0																					
15	14.3	1.0	1.6	9.9	1.1	2.0	6.8	1.3	2.6																		
20	19.4	1.0	1.5	13.4	1.1	2.0	9.5	1.2	2.6	6.7	1.4	3.1															
25	24.2	1.0	1.5	17.0	1.1	2.0	12.1	1.2	2.6	8.8	1.4	3.1	5.9	1.7	3.6												
30	29.0	1.0	1.6	20.4	1.1	2.0	14.6	1.2	2.6	10.7	1.4	3.1	7.8	1.6	3.7												
35	33.8	1.0	1.6	23.8	1.1	2.0	17.1	1.2	2.6	12.7	1.3	3.1	9.4	1.5	3.7	6.5	1.9	4.2									
40	38.6	1.0	1.6	27.1	1.1	2.0	19.8	1.2	2.5	14.6	1.3	3.1	10.9	1.5	3.7	8.1	1.7	4.2									
45	43.5	1.0	1.6	30.5	1.1	2.0	22.3	1.2	2.5	16.5	1.3	3.1	12.5	1.5	3.7	9.4	1.7	4.2									
50	48.3	1.0	1.6	33.9	1.1	2.0	24.8	1.2	2.5	18.3	1.3	3.1	13.9	1.5	3.7	10.6	1.7	4.2	7.7	2.0	4.8						
55	53.1	1.0	1.6	37.3	1.1	2.0	27.2	1.2	2.6	20.5	1.3	3.1	15.4	1.5	3.7	11.8	1.6	4.3	9.0	1.9	4.8						
60	57.9	1.0	1.6	40.7	1.1	2.0	29.7	1.2	2.6	22.3	1.3	3.1	16.9	1.5	3.7	13.0	1.6	4.3	10.1	1.9	4.8						
65	62.8	1.0	1.6	44.1	1.1	2.0	32.2	1.2	2.6	24.2	1.3	3.1	18.3	1.5	3.7	14.2	1.6	4.3	11.1	1.8	4.8	8.0	2.3	5.3			
70	67.6	1.0	1.6	47.5	1.1	2.0	34.6	1.2	2.6	26.0	1.3	3.1	19.8	1.4	3.7	15.4	1.6	4.3	12.0	1.8	4.8	9.3	2.1	5.3			
75	72.4	1.0	1.6	50.8	1.1	2.0	37.1	1.2	2.6	27.9	1.3	3.1	21.2	1.4	3.7	16.5	1.6	4.3	13.0	1.8	4.8	10.1	2.1	5.3			
80	77.2	1.0	1.6	54.2	1.1	2.0	39.6	1.2	2.6	29.7	1.3	3.1	23.0	1.4	3.6	17.7	1.6	4.3	14.0	1.8	4.8	11.0	2.0	5.3			
85	82.1	1.0	1.6	57.6	1.1	2.0	42.0	1.2	2.6	31.6	1.3	3.1	24.4	1.4	3.6	18.8	1.6	4.3	14.9	1.8	4.8	11.8	2.0	5.3			
90	86.9	1.0	1.6	61.0	1.1	2.0	44.5	1.2	2.6	33.5	1.3	3.1	25.8	1.4	3.6	20.0	1.6	4.3	15.9	1.8	4.8	12.6	2.0	5.3	9.1	2.5	5.9
95	91.7	1.0	1.6	64.4	1.1	2.0	47.0	1.2	2.6	35.3	1.3	3.1	27.3	1.4	3.6	21.1	1.6	4.3	16.8	1.8	4.8	13.4	2.0	5.4	10.2	2.4	5.9
100	96.6	1.0	1.6	67.8	1.1	2.0	49.4	1.2	2.6	37.2	1.3	3.1	28.7	1.4	3.6	22.3	1.6	4.3	17.7	1.8	4.8	14.2	2.0	5.4	10.9	2.3	5.9
105	101.4	1.0	1.6	71.2	1.1	2.0	51.9	1.2	2.6	39.0	1.3	3.1	30.1	1.4	3.6	23.4	1.6	4.3	18.7	1.8	4.8	15.0	2.0	5.4	11.6	2.3	5.9
110	106.2	1.0	1.6	74.6	1.1	2.0	54.4	1.2	2.6	40.9	1.3	3.1	31.6	1.4	3.6	24.6	1.6	4.3	19.6	1.7	4.8	15.8	2.0	5.4	12.3	2.3	5.9
115	111.0	1.0	1.6	78.0	1.1	2.0	56.8	1.2	2.6	42.7	1.3	3.1	33.0	1.4	3.6	26.1	1.6	4.2	20.5	1.7	4.8	16.6	1.9	5.4	13.0	2.2	5.9
120	115.9	1.0	1.6	81.3	1.1	2.0	59.3	1.2	2.6	44.6	1.3	3.1	34.4	1.4	3.6	27.2	1.6	4.2	21.5	1.7	4.8	17.3	1.9	5.4	13.6	2.2	5.9
125	120.7	1.0	1.6	84.7	1.1	2.0	61.8	1.2	2.6	46.4	1.3	3.1	35.9	1.4	3.6	28.3	1.6	4.2	22.4	1.7	4.8	18.1	1.9	5.4	14.3	2.2	5.9
130	125.5	1.0	1.6	88.1	1.1	2.0	64.3	1.2	2.6	48.3	1.3	3.1	37.3	1.4	3.7	29.5	1.6	4.2	23.3	1.7	4.8	18.9	1.9	5.4	14.9	2.2	5.9
135	130.3	1.0	1.6	91.5	1.1	2.0	66.7	1.2	2.6	50.2	1.3	3.1	38.7	1.4	3.7	30.6	1.6	4.2	24.2	1.7	4.8	19.6	1.9	5.4	15.6	2.2	5.9
140	135.2	1.0	1.6	94.9	1.1	2.0	69.2	1.2	2.6	52.0	1.3	3.1	40.2	1.4	3.7	31.7	1.6	4.2	25.1	1.7	4.8	20.4	1.9	5.4	16.2	2.2	5.9
145	140.0	1.0	1.6	98.3	1.1	2.0	71.7	1.2	2.6	53.9	1.3	3.1	41.6	1.4	3.7	32.9	1.6	4.2	26.1	1.7	4.8	21.2	1.9	5.4	16.9	2.2	5.9
150	144.8	1.0	1.6	101.7	1.1	2.0	74.1	1.2	2.6	55.7	1.3	3.1	43.0	1.4	3.7	34.0	1.6	4.2	27.0	1.7	4.8	21.9	1.9	5.4	17.5	2.2	5.9

RETARDANCE "D" AND "C"

NOTE: Width and Depth dimensions are in feet; Velocity measurements are in feet per second
Depth "D" does not include allowance for freeboard or settlement.

Table GS-4 Parabolic Grass Swale Design Sheet 6 of 14

V1 FOR RETARDANCE "D", TOP WIDTH (T), DEPTH (D), AND V2 FOR RETARDANCE "C"

Grade 1.50 Percent

Q CFS	V1=2.0			V1=2.5			V1=3.0			V1=3.5			V1=4.0			V1=4.5			V1=5.0			V1=5.5			V1=6.0		
	T	D	V2	T	D	V2	T	D	V2	T	D	V2	T	D	V2	T	D	V2	T	D	V2	T	D	V2	T	D	V2
5	4.9	1.0	1.5																								
10	10.5	0.9	1.5	7.1	1.1	2.0	4.6	1.3	2.5																		
15	16.0	0.9	1.5	10.9	1.0	2.0	7.8	1.1	2.5	5.3	1.4	3.1															
20	21.3	0.9	1.5	14.7	1.0	2.0	10.6	1.1	2.5	7.7	1.3	3.1	5.1	1.6	3.6												
25	26.6	0.9	1.5	18.6	1.0	2.0	13.4	1.1	2.5	9.9	1.2	3.1	7.3	1.4	3.6												
30	31.9	0.9	1.5	22.3	1.0	2.0	16.2	1.1	2.5	12.0	1.2	3.1	9.0	1.4	3.6	6.6	1.6	4.2									
35	37.3	0.9	1.5	26.0	1.0	2.0	19.1	1.1	2.5	14.1	1.2	3.1	10.7	1.4	3.6	8.1	1.5	4.2									
40	42.6	0.9	1.5	29.7	1.0	2.0	21.8	1.1	2.5	16.2	1.2	3.1	12.4	1.3	3.6	9.5	1.5	4.2	6.9	1.8	4.7						
45	47.9	0.9	1.5	33.4	1.0	2.0	24.5	1.1	2.5	18.3	1.2	3.1	14.0	1.3	3.6	10.8	1.5	4.2	8.3	1.7	4.7						
50	53.2	0.9	1.5	37.1	1.0	2.0	27.3	1.1	2.5	20.6	1.2	3.0	15.7	1.3	3.6	12.1	1.5	4.2	9.4	1.7	4.8						
55	58.5	0.9	1.5	40.8	1.0	2.0	30.0	1.1	2.5	22.7	1.2	3.0	17.3	1.3	3.6	13.4	1.5	4.2	10.5	1.6	4.8	8.1	1.9	5.3			
60	63.8	0.9	1.5	44.5	1.0	2.0	32.7	1.1	2.5	24.7	1.2	3.0	18.9	1.3	3.6	14.7	1.4	4.2	11.6	1.6	4.8	9.1	1.9	5.3			
65	69.2	0.9	1.5	48.2	1.0	2.0	35.4	1.1	2.5	26.8	1.2	3.1	20.8	1.3	3.6	16.0	1.4	4.2	12.7	1.6	4.8	10.0	1.8	5.3			
70	74.5	0.9	1.5	51.9	1.0	2.0	38.2	1.1	2.5	28.8	1.2	3.1	22.4	1.3	3.6	17.3	1.4	4.2	13.7	1.6	4.8	10.9	1.8	5.3	8.2	2.2	5.8
75	79.8	0.9	1.5	55.6	1.0	2.0	40.9	1.1	2.5	30.9	1.2	3.1	23.9	1.3	3.6	18.6	1.4	4.2	14.8	1.6	4.8	11.8	1.8	5.3	9.3	2.1	5.8
80	85.1	0.9	1.5	59.4	1.0	2.0	43.6	1.1	2.5	32.9	1.2	3.1	25.5	1.3	3.6	19.9	1.4	4.2	15.8	1.6	4.8	12.7	1.8	5.3	10.1	2.0	5.9
85	90.4	0.9	1.5	63.1	1.0	2.0	46.3	1.1	2.5	35.0	1.2	3.1	27.1	1.3	3.6	21.2	1.4	4.2	16.9	1.6	4.8	13.6	1.8	5.3	10.9	2.0	5.9
90	95.8	0.9	1.5	66.8	1.0	2.0	49.0	1.1	2.5	37.1	1.2	3.1	28.7	1.3	3.6	22.8	1.4	4.1	17.9	1.6	4.8	14.5	1.8	5.3	11.6	2.0	5.9
95	101.1	0.9	1.5	70.5	1.0	2.0	51.8	1.1	2.5	39.1	1.2	3.1	30.3	1.3	3.6	24.0	1.4	4.2	18.9	1.6	4.8	15.3	1.7	5.3	12.4	2.0	5.9
100	106.4	0.9	1.5	74.2	1.0	2.0	54.5	1.1	2.5	41.2	1.2	3.1	31.9	1.3	3.6	25.3	1.4	4.2	20.0	1.6	4.8	16.2	1.7	5.3	13.1	1.9	5.9
105	111.7	0.9	1.5	77.9	1.0	2.0	57.2	1.1	2.5	43.2	1.2	3.1	33.5	1.3	3.6	26.5	1.4	4.2	21.0	1.6	4.8	17.0	1.7	5.3	13.9	1.9	5.9
110	117.0	0.9	1.5	81.6	1.0	2.0	59.9	1.1	2.5	45.3	1.2	3.1	35.1	1.3	3.6	27.8	1.4	4.2	22.0	1.6	4.8	17.9	1.7	5.3	14.6	1.9	5.9
115	122.4	0.9	1.5	85.3	1.0	2.0	62.6	1.1	2.5	47.3	1.2	3.1	36.7	1.3	3.6	29.1	1.4	4.2	23.1	1.6	4.8	18.8	1.7	5.3	15.3	1.9	5.9
120	127.7	0.9	1.5	89.0	1.0	2.0	65.4	1.1	2.5	49.4	1.2	3.1	38.3	1.3	3.6	30.3	1.4	4.2	24.1	1.6	4.8	19.6	1.7	5.3	16.1	1.9	5.9
125	133.0	0.9	1.5	92.7	1.0	2.0	68.1	1.1	2.5	51.4	1.2	3.1	39.9	1.3	3.6	31.6	1.4	4.2	25.4	1.6	4.8	20.5	1.7	5.3	16.8	1.9	5.9
130	138.3	0.9	1.5	96.4	1.0	2.0	70.8	1.1	2.5	53.5	1.2	3.1	41.4	1.3	3.6	32.8	1.4	4.2	26.4	1.6	4.8	21.3	1.7	5.3	17.5	1.9	5.9
135	143.6	0.9	1.5	100.1	1.0	2.0	73.5	1.1	2.5	55.6	1.2	3.1	43.0	1.3	3.6	34.1	1.4	4.2	27.4	1.6	4.8	22.2	1.7	5.3	18.2	1.9	5.9
140	149.0	0.9	1.5	103.9	1.0	2.0	76.3	1.1	2.5	57.6	1.2	3.1	44.6	1.3	3.6	35.3	1.4	4.2	28.5	1.6	4.8	23.0	1.7	5.3	18.9	1.9	5.9
145	154.3	0.9	1.5	107.6	1.0	2.0	79.0	1.1	2.5	59.7	1.2	3.1	46.2	1.3	3.6	36.6	1.4	4.2	29.5	1.6	4.8	23.8	1.7	5.3	19.7	1.9	5.9
150	159.6	0.9	1.5	111.3	1.0	2.0	81.7	1.1	2.5	61.7	1.2	3.1	47.8	1.3	3.6	37.9	1.4	4.2	30.5	1.6	4.8	24.7	1.7	5.3	20.4	1.9	5.9

RETARDANCE "D" AND "C"

NOTE: Width and Depth dimensions are in feet; Velocity measurements are in feet per second;
Depth "D" does not include allowance for freeboard or settlement.

GaSWCC (Amd

Table GS-4 Parabolic Grass Swale Design Sheet 7 of 14

V1 FOR RETARDANCE "D", TOP WIDTH (T), DEPTH (D), AND V2 FOR RETARDANCE "C"

Grade 1.75 Percent

Q CFS	V1=2.0			V1=2.5			V1=3.0			V1=3.5			V1=4.0			V1=4.5			V1=5.0			V1=5.5			V1=6.0		
	T	D	V2	T	D	V2	T	D	V2	T	D	V2	T	D	V2	T	D	V2	T	D	V2	T	D	V2	T	D	V2
5	5.4	0.9	1.5																								
10	11.4	0.9	1.5	7.7	1.0	2.0	5.4	1.1	2.5																		
15	17.3	0.9	1.5	11.8	1.0	2.0	8.6	1.1	2.5	6.2	1.2	3.0															
20	23.1	0.9	1.5	16.0	0.9	2.0	11.6	1.0	2.5	8.6	1.2	3.0	6.3	1.3	3.6												
25	28.8	0.9	1.5	20.0	0.9	2.0	14.6	1.0	2.5	10.9	1.1	3.0	8.2	1.3	3.6	5.9	1.5	4.1									
30	34.6	0.9	1.5	24.0	0.9	2.0	17.8	1.0	2.5	13.2	1.1	3.0	10.1	1.2	3.6	7.6	1.4	4.2									
35	40.3	0.9	1.5	28.0	0.9	2.0	20.7	1.0	2.5	15.5	1.1	3.0	11.9	1.2	3.6	9.1	1.4	4.2	6.9	1.6	4.7						
40	46.1	0.9	1.5	32.0	0.9	2.0	23.7	1.0	2.5	18.0	1.1	3.0	13.7	1.2	3.6	10.6	1.4	4.2	8.2	1.6	4.7						
45	51.9	0.9	1.5	36.0	0.9	2.0	26.6	1.0	2.5	20.2	1.1	3.0	15.4	1.2	3.6	12.0	1.3	4.2	9.4	1.5	4.7	7.0	1.8	5.3			
50	57.6	0.9	1.5	40.0	0.9	2.0	29.6	1.0	2.5	22.4	1.1	3.0	17.2	1.2	3.6	13.5	1.3	4.1	10.6	1.5	4.7	8.3	1.7	5.3			
55	63.4	0.9	1.5	44.0	0.9	2.0	32.5	1.0	2.5	24.7	1.1	3.0	19.2	1.2	3.6	14.9	1.3	4.1	11.8	1.5	4.7	9.3	1.7	5.3	6.7	2.1	5.8
60	69.1	0.9	1.5	48.0	0.9	2.0	35.5	1.0	2.5	26.9	1.1	3.0	20.9	1.2	3.6	16.3	1.3	4.1	12.9	1.5	4.7	10.3	1.6	5.3	8.1	1.9	5.8
65	74.9	0.9	1.5	52.0	0.9	2.0	38.4	1.0	2.5	29.2	1.1	3.0	22.7	1.2	3.6	17.7	1.3	4.1	14.1	1.5	4.7	11.3	1.6	5.3	9.0	1.9	5.8
70	80.7	0.9	1.5	56.0	0.9	2.0	41.4	1.0	2.5	31.4	1.1	3.0	24.4	1.2	3.6	19.1	1.3	4.1	15.2	1.5	4.7	12.3	1.6	5.3	9.8	1.8	5.8
75	86.4	0.9	1.5	60.0	0.9	2.0	44.3	1.0	2.5	33.6	1.1	3.0	26.1	1.2	3.6	20.5	1.3	4.1	16.4	1.4	4.7	13.2	1.6	5.3	10.7	1.8	5.8
80	92.2	0.9	1.5	63.9	0.9	2.0	47.3	1.0	2.5	35.9	1.1	3.0	27.9	1.2	3.6	22.2	1.3	4.1	17.5	1.4	4.7	14.2	1.6	5.3	11.5	1.8	5.8
85	97.9	0.9	1.5	67.9	0.9	2.0	50.2	1.0	2.5	38.1	1.1	3.0	29.6	1.2	3.6	23.5	1.3	4.1	18.6	1.4	4.7	15.1	1.6	5.3	12.3	1.8	5.8
90	103.7	0.9	1.5	71.9	0.9	2.0	53.2	1.0	2.5	40.3	1.1	3.0	31.4	1.2	3.6	24.9	1.3	4.1	19.8	1.4	4.7	16.1	1.6	5.3	13.1	1.8	5.8
95	109.5	0.9	1.5	75.9	0.9	2.0	56.1	1.0	2.5	42.6	1.1	3.0	33.1	1.2	3.6	26.3	1.3	4.1	20.9	1.4	4.7	17.0	1.6	5.3	13.9	1.7	5.8
100	115.2	0.9	1.5	79.9	0.9	2.0	59.1	1.0	2.5	44.8	1.1	3.0	34.8	1.2	3.6	27.7	1.3	4.1	22.0	1.4	4.7	17.9	1.6	5.3	14.7	1.7	5.8
105	121.0	0.9	1.5	83.9	0.9	2.0	62.0	1.0	2.5	47.1	1.1	3.0	36.6	1.2	3.6	29.0	1.3	4.1	23.4	1.4	4.7	18.9	1.6	5.3	15.5	1.7	5.8
110	126.8	0.9	1.5	87.9	0.9	2.0	65.0	1.0	2.5	49.3	1.1	3.0	38.3	1.2	3.6	30.4	1.3	4.1	24.5	1.4	4.7	19.8	1.6	5.3	16.3	1.7	5.8
115	132.5	0.9	1.5	91.9	0.9	2.0	67.9	1.0	2.5	51.5	1.1	3.0	40.1	1.2	3.6	31.8	1.3	4.1	25.6	1.4	4.7	20.7	1.6	5.3	17.1	1.7	5.9
120	138.3	0.9	1.5	95.9	0.9	2.0	70.9	1.0	2.5	53.8	1.1	3.0	41.8	1.2	3.6	33.2	1.3	4.1	26.8	1.4	4.7	21.7	1.6	5.3	17.9	1.7	5.9
125	144.0	0.9	1.5	99.9	0.9	2.0	73.8	1.0	2.5	56.0	1.1	3.0	43.5	1.2	3.6	34.6	1.3	4.1	27.9	1.4	4.7	22.6	1.6	5.3	18.7	1.7	5.9
130	149.8	0.9	1.5	103.9	0.9	2.0	76.8	1.0	2.5	58.3	1.1	3.0	45.3	1.2	3.6	35.9	1.3	4.1	29.0	1.4	4.7	23.5	1.6	5.3	19.4	1.7	5.9
135	155.6	0.9	1.5	107.9	0.9	2.0	79.7	1.0	2.5	60.5	1.1	3.0	47.0	1.2	3.6	37.3	1.3	4.1	30.1	1.4	4.7	24.5	1.6	5.3	20.2	1.7	5.9
140	161.3	0.9	1.5	111.9	0.9	2.0	82.7	1.0	2.5	62.7	1.1	3.0	48.8	1.2	3.6	38.7	1.3	4.1	31.2	1.4	4.7	25.7	1.6	5.3	21.0	1.7	5.9
145	167.1	0.9	1.5	115.9	0.9	2.0	85.6	1.0	2.5	65.0	1.1	3.0	50.5	1.2	3.6	40.1	1.3	4.1	32.3	1.4	4.7	26.6	1.6	5.3	21.8	1.7	5.9
150	172.8	0.9	1.5	119.9	0.9	2.0	88.6	1.0	2.5	67.2	1.1	3.0	52.2	1.2	3.6	41.5	1.3	4.1	33.4	1.4	4.7	27.5	1.6	5.3	22.6	1.7	5.9

RETARDANCE "D" AND "C"

NOTE: Width and Depth dimensions are in feet; Velocity measurements are in feet per second:
Depth "D" does not include allowance for freeboard or settlement.

Table GS-4 Parabolic Grass Swale Design Sheet 8 of 14

V1 FOR RETARDANCE "D", TOP WIDTH (T), DEPTH (D), AND V2 FOR RETARDANCE "C"

Grade 2.00 Percent

Q CFS	V1=2.0			V1=2.5			V1=3.0			V1=3.5			V1=4.0			V1=4.5			V1=5.0			V1=5.5			V1=6.0		
	T	D	V2	T	D	V2	T	D	V2	T	D	V2	T	D	V2	T	D	V2	T	D	V2	T	D	V2	T	D	V2
5	5.9	0.9	1.5																								
10	12.4	0.8	1.5	8.1	0.9	2.0	5.9	1.0	2.5																		
15	18.5	0.8	1.5	12.3	0.9	2.0	9.3	1.0	2.5	6.8	1.1	3.0	4.7	1.4	3.5												
20	24.7	0.8	1.5	16.7	0.9	2.0	12.5	1.0	2.5	9.4	1.1	3.0	7.0	1.2	3.6	4.7	1.5	4.1									
25	30.8	0.8	1.5	20.8	0.9	2.0	15.9	1.0	2.4	11.8	1.1	3.0	9.0	1.2	3.5	6.8	1.3	4.1									
30	37.0	0.8	1.5	25.0	0.9	2.0	19.0	1.0	2.5	14.3	1.1	3.0	11.0	1.2	3.5	8.5	1.3	4.1	6.4	1.5	4.7						
35	43.2	0.8	1.5	29.1	0.9	2.0	22.2	1.0	2.5	16.9	1.0	3.0	12.9	1.1	3.5	10.1	1.3	4.1	7.8	1.4	4.7						
40	49.3	0.8	1.5	33.3	0.9	2.0	25.3	1.0	2.5	19.3	1.0	3.0	14.8	1.1	3.5	11.6	1.3	4.1	9.1	1.4	4.7	7.1	1.6	5.2			
45	55.5	0.8	1.5	37.4	0.9	2.0	28.5	1.0	2.5	21.7	1.0	3.0	16.7	1.1	3.5	13.1	1.3	4.1	10.4	1.4	4.7	8.2	1.6	5.2			
50	61.7	0.8	1.5	41.6	0.9	2.0	31.7	1.0	2.5	24.1	1.0	3.0	18.8	1.1	3.5	14.7	1.2	4.1	11.7	1.4	4.7	9.3	1.5	5.3	7.1	1.8	5.8
55	67.8	0.8	1.5	45.7	0.9	2.0	34.8	1.0	2.5	26.5	1.0	3.0	20.7	1.1	3.5	16.2	1.2	4.1	12.9	1.4	4.7	10.4	1.5	5.3	8.2	1.7	5.8
60	74.0	0.8	1.5	49.9	0.9	2.0	38.0	1.0	2.5	28.9	1.0	3.0	22.6	1.1	3.5	17.7	1.2	4.1	14.1	1.4	4.7	11.4	1.5	5.3	9.2	1.7	5.8
65	80.2	0.8	1.5	54.0	0.9	2.0	41.1	1.0	2.5	31.4	1.0	3.0	24.5	1.1	3.5	19.5	1.2	4.1	15.4	1.3	4.7	12.4	1.5	5.3	10.1	1.7	5.8
70	86.3	0.8	1.5	58.2	0.9	2.0	44.3	1.0	2.5	33.8	1.0	3.0	26.3	1.1	3.5	21.0	1.2	4.1	16.6	1.3	4.7	13.5	1.5	5.3	11.0	1.6	5.8
75	92.5	0.8	1.5	62.3	0.9	2.0	47.5	1.0	2.5	36.2	1.0	3.0	28.2	1.1	3.5	22.4	1.2	4.1	17.8	1.3	4.7	14.5	1.5	5.3	11.8	1.6	5.8
80	98.7	0.8	1.5	66.5	0.9	2.0	50.6	1.0	2.5	38.6	1.0	3.0	30.1	1.1	3.5	23.9	1.2	4.1	19.0	1.3	4.7	15.5	1.5	5.3	12.7	1.6	5.8
85	104.8	0.8	1.5	70.6	0.9	2.0	53.8	1.0	2.5	41.0	1.0	3.0	32.0	1.1	3.5	25.4	1.2	4.1	20.3	1.3	4.7	16.5	1.5	5.3	13.6	1.6	5.8
90	111.0	0.8	1.5	74.8	0.9	2.0	57.0	1.0	2.5	43.4	1.0	3.0	33.8	1.1	3.5	26.9	1.2	4.1	21.8	1.3	4.6	17.5	1.5	5.3	14.4	1.6	5.8
95	117.2	0.8	1.5	78.9	0.9	2.0	60.1	1.0	2.5	45.8	1.0	3.0	35.7	1.1	3.5	28.4	1.2	4.1	23.0	1.3	4.6	18.6	1.5	5.3	15.3	1.6	5.8
100	123.3	0.8	1.5	83.1	0.9	2.0	63.3	1.0	2.5	48.2	1.0	3.0	37.6	1.1	3.5	29.9	1.2	4.1	24.2	1.3	4.6	19.6	1.5	5.3	16.2	1.6	5.8
105	129.5	0.8	1.5	87.3	0.9	2.0	66.4	1.0	2.5	50.6	1.0	3.0	39.5	1.1	3.5	31.4	1.2	4.1	25.4	1.3	4.6	20.6	1.5	5.3	17.0	1.6	5.8
110	135.7	0.8	1.5	91.4	0.9	2.0	69.6	1.0	2.5	53.0	1.0	3.0	41.3	1.1	3.5	32.9	1.2	4.1	26.6	1.3	4.7	21.6	1.4	5.3	17.9	1.6	5.8
115	141.8	0.8	1.5	95.6	0.9	2.0	72.8	1.0	2.5	55.4	1.0	3.0	43.2	1.1	3.5	34.4	1.2	4.1	27.9	1.3	4.7	22.6	1.4	5.3	18.7	1.6	5.8
120	148.0	0.8	1.5	99.7	0.9	2.0	75.9	1.0	2.5	57.9	1.0	3.0	45.1	1.1	3.5	35.9	1.2	4.1	29.1	1.3	4.7	23.9	1.4	5.2	19.5	1.6	5.8
125	154.1	0.8	1.5	103.9	0.9	2.0	79.1	1.0	2.5	60.3	1.0	3.0	47.0	1.1	3.5	37.4	1.2	4.1	30.3	1.3	4.7	24.8	1.4	5.2	20.4	1.6	5.8
130	160.3	0.8	1.5	108.0	0.9	2.0	82.3	1.0	2.5	62.7	1.0	3.0	48.8	1.1	3.5	38.9	1.2	4.1	31.5	1.3	4.7	25.8	1.4	5.3	21.2	1.6	5.8
135	166.5	0.8	1.5	112.2	0.9	2.0	85.4	1.0	2.5	65.1	1.0	3.0	50.7	1.1	3.5	40.3	1.2	4.1	32.7	1.3	4.7	26.8	1.4	5.3	22.1	1.6	5.8
140	172.6	0.8	1.5	116.3	0.9	2.0	88.6	1.0	2.5	67.5	1.0	3.0	52.6	1.1	3.5	41.8	1.2	4.1	33.9	1.3	4.7	27.8	1.4	5.3	22.9	1.6	5.8
145	178.8	0.8	1.5	120.5	0.9	2.0	91.8	1.0	2.5	69.9	1.0	3.0	54.5	1.1	3.5	43.3	1.2	4.1	35.1	1.3	4.7	28.8	1.4	5.3	23.7	1.6	5.8
150	185.0	0.8	1.5	124.6	0.9	2.0	94.9	1.0	2.5	72.3	1.0	3.0	56.4	1.1	3.5	44.8	1.2	4.1	36.3	1.3	4.7	29.8	1.4	5.3	24.6	1.6	5.8

RETARDANCE "D" AND "C"

NOTE: Width and Depth dimensions are in feet; Velocity measurements are in feet per second; Depth "D" does not include allowance for freeboard or settlement.

Table GS-4 Parabolic Grass Swale Design Sheet 9 of 14

V1 FOR RETARDANCE "D", TOP WIDTH (T), DEPTH (D), AND V2 FOR RETARDANCE "C"

Grade 3.00 Percent

Q CFS	V1=2.0			V1=2.5			V1=3.0			V1=3.5			V1=4.0			V1=4.5			V1=5.0			V1=5.5			V1=6.0		
	T	D	V2	T	D	V2	T	D	V2	T	D	V2	T	D	V2	T	D	V2	T	D	V2	T	D	V2	T	D	V2
5	7.4	0.7	1.4	4.9	0.8	1.9	3.2	1.0	2.3																		
10	15.1	0.7	1.4	10.2	0.8	1.9	7.6	0.8	2.4	5.7	0.9	2.9	4.0	1.1	3.4												
15	22.6	0.7	1.4	15.6	0.8	1.9	11.5	0.8	2.4	8.8	0.9	2.9	6.7	1.0	3.4	5.1	1.1	4.0									
20	30.1	0.7	1.4	20.7	0.8	1.9	15.5	0.8	2.4	11.8	0.9	2.9	9.2	0.9	3.4	7.2	1.0	4.0	5.5	1.2	4.6						
25	37.6	0.7	1.4	25.9	0.8	1.9	19.4	0.8	2.4	15.0	0.9	2.9	11.6	0.9	3.4	9.2	1.0	4.0	7.2	1.1	4.6	5.6	1.3	5.1			
30	45.1	0.7	1.4	31.1	0.8	1.9	23.3	0.8	2.4	18.0	0.9	2.9	14.0	0.9	3.4	11.1	1.0	4.0	8.9	1.1	4.6	7.1	1.2	5.2	5.3	1.5	5.7
35	52.7	0.7	1.4	36.2	0.8	1.9	27.1	0.8	2.4	21.0	0.9	2.9	16.5	0.9	3.4	13.0	1.0	4.0	10.5	1.1	4.6	8.4	1.2	5.2	6.7	1.4	5.7
40	60.2	0.7	1.4	41.4	0.8	1.9	31.0	0.8	2.4	24.0	0.9	2.9	18.9	0.9	3.4	14.9	1.0	4.0	12.0	1.1	4.6	9.8	1.2	5.2	7.9	1.3	5.7
45	67.7	0.7	1.4	46.6	0.8	1.9	34.9	0.8	2.4	27.0	0.9	2.9	21.2	0.9	3.4	17.0	1.0	4.0	13.6	1.1	4.6	11.1	1.2	5.2	9.1	1.3	5.7
50	75.2	0.7	1.4	51.8	0.8	1.9	38.8	0.8	2.4	29.9	0.9	2.9	23.6	0.9	3.4	18.9	1.0	4.0	15.2	1.1	4.6	12.4	1.2	5.2	10.2	1.3	5.7
55	82.8	0.7	1.4	56.9	0.8	1.9	42.6	0.8	2.4	32.9	0.9	2.9	25.9	0.9	3.4	20.8	1.0	4.0	16.7	1.1	4.6	13.7	1.2	5.2	11.3	1.3	5.7
60	90.3	0.7	1.4	62.1	0.8	1.9	46.5	0.8	2.4	35.9	0.9	2.9	28.3	0.9	3.4	22.7	1.0	4.0	18.5	1.1	4.5	14.9	1.2	5.2	12.4	1.3	5.7
65	97.8	0.7	1.4	67.3	0.8	1.9	50.4	0.8	2.4	38.9	0.9	2.9	30.6	0.9	3.4	24.6	1.0	4.0	20.0	1.1	4.5	16.2	1.2	5.2	13.5	1.3	5.7
70	105.3	0.7	1.4	72.4	0.8	1.9	54.3	0.8	2.4	41.9	0.9	2.9	33.0	0.9	3.4	26.4	1.0	4.0	21.5	1.1	4.5	17.5	1.2	5.2	14.5	1.3	5.7
75	112.8	0.7	1.4	77.6	0.8	1.9	58.1	0.8	2.4	44.9	0.9	2.9	35.3	0.9	3.4	28.3	1.0	4.0	23.1	1.1	4.5	19.1	1.2	5.1	15.6	1.3	5.7
80	120.4	0.7	1.4	82.8	0.8	1.9	62.0	0.8	2.4	47.9	0.9	2.9	37.7	0.9	3.4	30.2	1.0	4.0	24.6	1.1	4.5	20.3	1.2	5.1	16.7	1.3	5.7
85	127.9	0.7	1.4	88.0	0.8	1.9	65.9	0.8	2.4	50.9	0.9	2.9	40.1	0.9	3.4	32.1	1.0	4.0	26.1	1.1	4.5	21.6	1.2	5.1	17.8	1.2	5.7
90	135.4	0.7	1.4	93.1	0.8	1.9	69.8	0.8	2.4	53.9	0.9	2.9	42.4	0.9	3.4	34.0	1.0	4.0	27.7	1.1	4.5	22.9	1.2	5.1	18.9	1.2	5.7
95	142.9	0.7	1.4	98.3	0.8	1.9	73.6	0.8	2.4	56.9	0.9	2.9	44.8	0.9	3.4	35.9	1.0	4.0	29.2	1.1	4.5	24.1	1.2	5.1	20.2	1.2	5.7
100	150.5	0.7	1.4	103.5	0.8	1.9	77.5	0.8	2.4	59.9	0.9	2.9	47.1	0.9	3.4	37.8	1.0	4.0	30.7	1.1	4.5	25.4	1.2	5.1	21.2	1.2	5.7
105	158.0	0.7	1.4	108.7	0.8	1.9	81.4	0.8	2.4	62.8	0.9	2.9	49.5	0.9	3.4	39.6	1.0	4.0	32.3	1.1	4.5	26.7	1.2	5.1	22.3	1.2	5.7
110	165.5	0.7	1.4	113.8	0.8	1.9	85.3	0.8	2.4	65.8	0.9	2.9	51.8	0.9	3.4	41.5	1.0	4.0	33.8	1.1	4.6	27.9	1.2	5.1	23.3	1.2	5.7
115	173.0	0.7	1.4	119.0	0.8	1.9	89.1	0.8	2.4	68.8	0.9	2.9	54.2	0.9	3.4	43.4	1.0	4.0	35.4	1.1	4.6	29.2	1.2	5.1	24.4	1.2	5.7
120	180.5	0.7	1.4	124.2	0.8	1.9	93.0	0.8	2.4	71.8	0.9	2.9	56.5	0.9	3.4	45.3	1.0	4.0	36.9	1.1	4.6	30.5	1.2	5.1	25.5	1.2	5.7
125	188.1	0.7	1.4	129.4	0.8	1.9	96.9	0.8	2.4	74.8	0.9	2.9	58.9	0.9	3.4	47.2	1.0	4.0	38.4	1.1	4.6	31.7	1.2	5.1	26.5	1.2	5.7
130	195.6	0.7	1.4	134.5	0.8	1.9	100.8	0.8	2.4	77.8	0.9	2.9	61.2	0.9	3.4	49.1	1.0	4.0	40.0	1.1	4.6	33.0	1.2	5.1	27.6	1.2	5.7
135	203.1	0.7	1.4	139.7	0.8	1.9	104.6	0.8	2.4	80.8	0.9	2.9	63.6	0.9	3.4	51.0	1.0	4.0	41.5	1.1	4.6	34.3	1.2	5.1	28.6	1.2	5.7
140	210.6	0.7	1.4	144.9	0.8	1.9	108.5	0.8	2.4	83.8	0.9	2.9	66.0	0.9	3.4	52.8	1.0	4.0	43.0	1.1	4.6	35.6	1.2	5.1	29.7	1.2	5.7
145	218.2	0.7	1.4	150.1	0.8	1.9	112.4	0.8	2.4	86.8	0.9	2.9	68.3	0.9	3.4	54.7	1.0	4.0	44.6	1.1	4.6	36.8	1.2	5.1	30.7	1.2	5.7
150	225.7	0.7	1.4	155.2	0.8	1.9	116.3	0.8	2.4	89.8	0.9	2.9	70.7	0.9	3.4	56.6	1.0	4.0	46.1	1.1	4.6	38.1	1.2	5.1	31.8	1.2	5.7

RETARDANCE "D" AND "C"

NOTE: Width and Depth dir sions are in feet; Velocity measurements are in feet per second; includ llowance for freeboarc settlement.

Table GS-4 Parabolic Grass Swale Design Sheet 10 of 14

V1 FOR RETARDANCE "D", TOP WIDTH (T), DEPTH (D), AND V2 FOR RETARDANCE "C"

Grade 4.00 Percent

Q CFS	V1=2.0			V1=2.5			V1=3.0			V1=3.5			V1=4.0			V1=4.5			V1=5.0			V1=5.5			V1=6.0		
	T	D	V2	T	D	V2	T	D	V2	T	D	V2	T	D	V2	T	D	V2	T	D	V2	T	D	V2	T	D	V2
5	8.5	0.6	1.4	5.9	0.7	1.8	4.1	0.8	2.3																		
10	17.2	0.6	1.4	12.1	0.7	1.8	8.8	0.7	2.3	6.7	0.8	2.8	5.2	0.9	3.3	3.8	1.0	3.9									
15	25.8	0.6	1.4	18.1	0.7	1.8	13.4	0.7	2.3	10.3	0.8	2.8	8.1	0.8	3.4	6.4	0.9	3.9	4.9	1.0	4.5						
20	34.4	0.6	1.4	24.2	0.7	1.8	17.8	0.7	2.3	13.9	0.8	2.8	10.9	0.8	3.4	8.7	0.9	3.9	6.9	1.0	4.5	5.5	1.1	5.0			
25	43.0	0.6	1.4	30.2	0.7	1.9	22.3	0.7	2.3	17.4	0.8	2.8	13.8	0.8	3.3	10.9	0.9	3.9	8.8	1.0	4.5	7.1	1.0	5.1	5.7	1.2	5.6
30	51.6	0.6	1.4	36.3	0.7	1.9	26.7	0.7	2.3	20.8	0.8	2.8	16.5	0.8	3.3	13.2	0.9	3.9	10.7	0.9	4.5	8.7	1.0	5.1	7.1	1.1	5.6
35	60.2	0.6	1.4	42.3	0.7	1.9	31.1	0.7	2.3	24.3	0.8	2.8	19.3	0.8	3.4	15.6	0.9	3.9	12.5	0.9	4.5	10.3	1.0	5.0	8.4	1.1	5.6
40	68.8	0.6	1.4	48.3	0.7	1.9	35.6	0.7	2.3	27.8	0.8	2.8	22.0	0.8	3.4	17.8	0.9	3.9	14.4	0.9	4.5	11.8	1.0	5.0	9.8	1.1	5.7
45	77.4	0.6	1.4	54.4	0.7	1.9	40.0	0.7	2.4	31.2	0.8	2.8	24.8	0.8	3.4	20.0	0.9	3.9	16.4	0.9	4.4	13.3	1.0	5.0	11.1	1.1	5.7
50	86.0	0.6	1.4	60.4	0.7	1.9	44.5	0.7	2.4	34.7	0.8	2.8	27.5	0.8	3.4	22.2	0.9	3.9	18.2	0.9	4.4	14.9	1.0	5.0	12.3	1.1	5.7
55	94.6	0.6	1.4	66.5	0.7	1.9	48.9	0.7	2.4	38.2	0.8	2.8	30.3	0.8	3.4	24.4	0.9	3.9	20.0	0.9	4.4	16.6	1.0	5.0	13.6	1.1	5.7
60	103.2	0.6	1.4	72.5	0.7	1.9	53.4	0.7	2.4	41.7	0.8	2.8	33.0	0.8	3.4	26.6	0.9	3.9	21.8	0.9	4.5	18.1	1.0	5.0	14.9	1.1	5.7
65	111.8	0.6	1.4	78.5	0.7	1.9	57.8	0.7	2.4	45.1	0.8	2.8	35.8	0.8	3.4	28.9	0.9	3.9	23.6	0.9	4.5	19.6	1.0	5.0	16.2	1.1	5.7
70	120.4	0.6	1.4	84.6	0.7	1.9	62.3	0.7	2.4	48.6	0.8	2.8	38.6	0.8	3.4	31.1	0.9	3.9	25.4	0.9	4.5	21.1	1.0	5.0	17.7	1.1	5.6
75	129.0	0.6	1.4	90.6	0.7	1.9	66.7	0.7	2.4	52.1	0.8	2.8	41.3	0.8	3.4	33.3	0.9	3.9	27.2	0.9	4.5	22.6	1.0	5.0	19.0	1.1	5.6
80	137.6	0.6	1.4	96.7	0.7	1.9	71.2	0.7	2.4	55.5	0.8	2.8	44.1	0.8	3.4	35.5	0.9	3.9	29.1	0.9	4.5	24.1	1.0	5.0	20.2	1.1	5.6
85	146.2	0.6	1.4	102.7	0.7	1.9	75.6	0.7	2.4	59.0	0.8	2.8	46.8	0.8	3.4	37.7	0.9	3.9	30.9	0.9	4.5	25.6	1.0	5.0	21.5	1.1	5.6
90	154.8	0.6	1.4	108.7	0.7	1.9	80.0	0.7	2.4	62.5	0.8	2.8	49.6	0.8	3.4	39.9	0.9	3.9	32.7	0.9	4.5	27.1	1.0	5.0	22.8	1.1	5.6
95	163.4	0.6	1.4	114.8	0.7	1.9	84.5	0.7	2.4	65.9	0.8	2.8	52.3	0.8	3.4	42.2	0.9	3.9	34.5	0.9	4.5	28.6	1.0	5.0	24.0	1.1	5.6
100	172.0	0.6	1.4	120.8	0.7	1.9	88.9	0.7	2.4	69.4	0.8	2.8	55.1	0.8	3.4	44.4	0.9	3.9	36.3	0.9	4.5	30.1	1.0	5.0	25.3	1.1	5.6
105	180.6	0.6	1.4	126.9	0.7	1.9	93.4	0.7	2.4	72.9	0.8	2.8	57.8	0.8	3.4	46.6	0.9	3.9	38.1	0.9	4.5	31.6	1.0	5.0	26.5	1.1	5.6
110	189.2	0.6	1.4	132.9	0.7	1.9	97.8	0.7	2.4	76.3	0.8	2.8	60.6	0.8	3.4	48.8	0.9	3.9	39.9	0.9	4.5	33.1	1.0	5.0	27.8	1.1	5.6
115	197.8	0.6	1.4	138.9	0.7	1.9	102.3	0.7	2.4	79.8	0.8	2.8	63.3	0.8	3.4	51.0	0.9	3.9	41.7	0.9	4.5	34.6	1.0	5.0	29.0	1.1	5.6
120	206.4	0.6	1.4	145.0	0.7	1.9	106.7	0.7	2.4	83.3	0.8	2.8	66.1	0.8	3.4	53.3	0.9	3.9	43.6	0.9	4.5	36.1	1.0	5.0	30.2	1.1	5.7
125	215.0	0.6	1.4	151.0	0.7	1.9	111.2	0.7	2.4	86.8	0.8	2.8	68.8	0.8	3.4	55.5	0.9	3.9	45.4	0.9	4.5	37.6	1.0	5.0	31.5	1.1	5.7
130	223.7	0.6	1.4	157.1	0.7	1.9	115.6	0.7	2.4	90.2	0.8	2.8	71.6	0.8	3.4	57.7	0.9	3.9	47.2	0.9	4.5	39.1	1.0	5.0	32.7	1.1	5.7
135	232.3	0.6	1.4	163.1	0.7	1.9	120.1	0.7	2.4	93.7	0.8	2.8	74.3	0.8	3.4	59.9	0.9	3.9	49.0	0.9	4.5	40.6	1.0	5.0	34.0	1.1	5.7
140	240.9	0.6	1.4	169.1	0.7	1.9	124.5	0.7	2.4	97.2	0.8	2.8	77.1	0.8	3.4	62.1	0.9	3.9	50.8	0.9	4.5	42.1	1.0	5.0	35.2	1.1	5.7
145	249.5	0.6	1.4	175.2	0.7	1.9	129.0	0.7	2.4	100.6	0.8	2.8	79.8	0.8	3.4	64.3	0.9	3.9	52.6	0.9	4.5	43.6	1.0	5.0	36.5	1.1	5.7
150	258.1	0.6	1.4	181.2	0.7	1.9	133.4	0.7	2.4	104.1	0.8	2.8	82.6	0.8	3.4	66.6	0.9	3.9	54.4	0.9	4.5	45.1	1.0	5.0	37.8	1.1	5.7

RETARDANCE "D" AND "C"

NOTE: Width and Depth dimensions are in feet; Velocity measurements are in feet per second; Depth "D" does not include allowance for freeboard or settlement.

Table GS-4 Parabolic Grass Swale Design Sheet 11 of 14

V1 FOR RETARDANCE "D", TOP WIDTH (T), DEPTH (D), AND V2 FOR RETARDANCE "C"

Grade 5.00 Percent

Q CFS	V1=2.0			V1=2.5			V1=3.0			V1=3.5			V1=4.0			V1=4.5			V1=5.0			V1=5.5			V1=6.0		
	T	D	V2	T	D	V2	T	D	V2	T	D	V2	T	D	V2	T	D	V2	T	D	V2	T	D	V2	T	D	V2
5	9.5	0.6	1.4	6.7	0.6	1.8	4.7	0.7	2.3	3.5	0.8	2.8															
10	19.0	0.6	1.4	13.7	0.6	1.8	9.7	0.7	2.3	7.6	0.7	2.8	6.0	0.8	3.3	4.7	0.8	3.8	3.4	1.0	4.4						
15	28.5	0.6	1.4	20.5	0.6	1.8	14.8	0.7	2.3	11.7	0.7	2.8	9.2	0.7	3.3	7.3	0.8	3.8	5.9	0.9	4.4	4.7	1.0	5.0			
20	38.0	0.6	1.4	27.3	0.6	1.8	19.7	0.7	2.3	15.5	0.7	2.8	12.4	0.7	3.3	9.9	0.8	3.8	8.0	0.9	4.4	6.5	0.9	4.9	5.3	1.0	5.5
25	47.5	0.6	1.4	34.1	0.6	1.8	24.6	0.7	2.3	19.4	0.7	2.8	15.5	0.7	3.3	12.6	0.8	3.8	10.1	0.8	4.4	8.3	0.9	5.0	6.8	1.0	5.6
30	57.0	0.6	1.4	40.9	0.6	1.8	29.5	0.7	2.3	23.3	0.7	2.8	18.6	0.7	3.3	15.1	0.8	3.8	12.2	0.8	4.4	10.1	0.9	5.0	8.3	1.0	5.6
35	66.5	0.6	1.4	47.7	0.6	1.8	34.4	0.7	2.3	27.2	0.7	2.8	21.7	0.7	3.3	17.6	0.8	3.8	14.5	0.8	4.4	11.8	0.9	5.0	9.8	1.0	5.6
40	76.0	0.6	1.4	54.6	0.6	1.8	39.4	0.7	2.3	31.0	0.7	2.8	24.8	0.7	3.3	20.1	0.8	3.8	16.5	0.8	4.4	13.6	0.9	5.0	11.3	1.0	5.5
45	85.5	0.6	1.4	61.4	0.6	1.8	44.3	0.7	2.3	34.9	0.7	2.8	27.9	0.7	3.3	22.6	0.8	3.8	18.6	0.8	4.4	15.5	0.9	4.9	12.8	1.0	5.5
50	95.0	0.6	1.4	68.2	0.6	1.8	49.2	0.7	2.3	38.8	0.7	2.8	31.0	0.7	3.3	25.1	0.8	3.8	20.6	0.8	4.4	17.2	0.9	4.9	14.3	1.0	5.5
55	104.6	0.6	1.4	75.0	0.6	1.8	54.1	0.7	2.3	42.7	0.7	2.8	34.1	0.7	3.3	27.6	0.8	3.8	22.7	0.8	4.4	18.9	0.9	4.9	15.9	0.9	5.5
60	114.1	0.6	1.4	81.8	0.6	1.8	59.0	0.7	2.3	46.6	0.7	2.8	37.2	0.7	3.3	30.1	0.8	3.8	24.7	0.8	4.4	20.6	0.9	4.9	17.3	0.9	5.5
65	123.6	0.6	1.4	88.6	0.6	1.8	63.9	0.7	2.3	50.4	0.7	2.8	40.3	0.7	3.3	32.6	0.8	3.8	26.8	0.8	4.4	22.3	0.9	4.9	18.8	0.9	5.5
70	133.1	0.6	1.4	95.5	0.6	1.8	68.9	0.7	2.3	54.3	0.7	2.8	43.4	0.7	3.3	35.1	0.8	3.8	28.9	0.8	4.4	24.0	0.9	4.9	20.2	0.9	5.5
75	142.6	0.6	1.4	102.3	0.6	1.8	73.8	0.7	2.3	58.2	0.7	2.8	46.5	0.7	3.3	37.7	0.8	3.8	30.9	0.8	4.4	25.7	0.9	4.9	21.6	0.9	5.5
80	152.1	0.6	1.4	109.1	0.6	1.8	78.7	0.7	2.3	62.1	0.7	2.8	49.6	0.7	3.3	40.2	0.8	3.8	33.0	0.8	4.4	27.4	0.9	4.9	23.1	0.9	5.5
85	161.6	0.6	1.4	115.9	0.6	1.8	83.6	0.7	2.3	65.9	0.7	2.8	52.7	0.7	3.3	42.7	0.8	3.8	35.0	0.8	4.4	29.1	0.9	5.0	24.5	0.9	5.5
90	171.1	0.6	1.4	122.7	0.6	1.8	88.5	0.7	2.3	69.8	0.7	2.8	55.8	0.7	3.3	45.2	0.8	3.8	37.1	0.8	4.4	30.9	0.9	5.0	26.0	0.9	5.5
95	180.6	0.6	1.4	129.6	0.6	1.8	93.4	0.7	2.3	73.7	0.7	2.8	58.9	0.7	3.3	47.7	0.8	3.8	39.2	0.8	4.4	32.6	0.9	5.0	27.4	0.9	5.5
100	190.1	0.6	1.4	136.4	0.6	1.8	98.4	0.7	2.3	77.6	0.7	2.8	62.0	0.7	3.3	50.2	0.8	3.8	41.2	0.8	4.4	34.3	0.9	5.0	28.8	0.9	5.5
105	199.6	0.6	1.4	143.2	0.6	1.8	103.3	0.7	2.3	81.5	0.7	2.8	65.1	0.7	3.3	52.7	0.8	3.8	43.3	0.8	4.4	36.0	0.9	5.0	30.3	0.9	5.5
110	209.1	0.6	1.4	150.0	0.6	1.8	108.2	0.7	2.3	85.3	0.7	2.8	68.2	0.7	3.3	55.2	0.8	3.8	45.3	0.8	4.4	37.7	0.9	5.0	31.7	0.9	5.5
115	218.6	0.6	1.4	156.8	0.6	1.8	113.1	0.7	2.3	89.2	0.7	2.8	71.3	0.7	3.3	57.7	0.8	3.8	47.4	0.8	4.4	39.4	0.9	5.0	33.2	0.9	5.5
120	228.1	0.6	1.4	163.6	0.6	1.8	118.0	0.7	2.3	93.1	0.7	2.8	74.3	0.7	3.3	60.2	0.8	3.8	49.5	0.8	4.4	41.1	0.9	5.0	34.6	0.9	5.5
125	237.6	0.6	1.4	170.5	0.6	1.8	123.0	0.7	2.3	97.0	0.7	2.8	77.4	0.7	3.3	62.7	0.8	3.8	51.5	0.8	4.4	42.8	0.9	5.0	36.0	0.9	5.5
130	247.1	0.6	1.4	177.3	0.6	1.8	127.9	0.7	2.3	100.8	0.7	2.8	80.5	0.7	3.3	65.2	0.8	3.8	53.6	0.8	4.4	44.6	0.9	5.0	37.5	0.9	5.5
135	256.6	0.6	1.4	184.1	0.6	1.8	132.8	0.7	2.3	104.7	0.7	2.8	83.6	0.7	3.3	67.8	0.8	3.8	55.6	0.8	4.4	46.3	0.9	5.0	38.9	0.9	5.5
140	266.1	0.6	1.4	190.9	0.6	1.8	137.7	0.7	2.3	108.6	0.7	2.8	86.7	0.7	3.3	70.3	0.8	3.8	57.7	0.8	4.4	48.0	0.9	5.0	40.4	0.9	5.5
145	275.6	0.6	1.4	197.7	0.6	1.8	142.6	0.7	2.3	112.5	0.7	2.8	89.8	0.7	3.3	72.8	0.8	3.8	59.8	0.8	4.4	49.7	0.9	5.0	41.8	0.9	5.5
150	285.1	0.6	1.4	204.6	0.6	1.8	147.5	0.7	2.3	116.4	0.7	2.8	92.9	0.7	3.3	75.3	0.8	3.8	61.8	0.8	4.4	51.4	0.9	5.0	43.2	0.9	5.5

RETARDANCE "D" AND "C"

NOTE: Width and Depth dimensions are in feet; Velocity measurements are in feet per second:
Depth "D" does not include allowance for freeboard or settlement.

Table GS-4 Parabolic Grass Swale Design Sheet 12 of 14

V1 FOR RETARDANCE "D", TOP WIDTH (T), DEPTH (D), AND V2 FOR RETARDANCE "C"

Grade 6.00 Percent

Q CFS	V1=2.0			V1=2.5			V1=3.0			V1=3.5			V1=4.0			V1=4.5			V1=5.0			V1=5.5			V1=6.0		
	T	D	V2	T	D	V2	T	D	V2	T	D	V2	T	D	V2	T	D	V2	T	D	V2	T	D	V2	T	D	V2
5	10.6	0.5	1.3	7.3	0.6	1.8	5.3	0.6	2.3	4.0	0.7	2.8	2.9	0.8	3.2												
10	21.1	0.5	1.3	14.7	0.6	1.8	10.9	0.6	2.3	8.4	0.7	2.8	6.6	0.7	3.2	5.3	0.8	3.8	4.2	0.8	4.3						
15	31.6	0.5	1.3	22.1	0.6	1.8	16.3	0.6	2.3	12.7	0.6	2.7	10.1	0.7	3.3	8.2	0.7	3.8	6.6	0.8	4.3	5.4	0.9	4.9	4.3	1.0	5.5
20	42.1	0.5	1.3	29.5	0.6	1.8	21.7	0.6	2.3	17.0	0.6	2.7	13.6	0.7	3.2	11.1	0.7	3.7	9.0	0.8	4.3	7.4	0.8	4.9	6.1	0.9	5.5
25	52.7	0.5	1.3	36.8	0.6	1.8	27.1	0.6	2.3	21.2	0.6	2.8	17.0	0.7	3.2	13.9	0.7	3.8	11.3	0.8	4.3	9.3	0.8	4.9	7.8	0.9	5.5
30	63.2	0.5	1.3	44.2	0.6	1.8	32.5	0.6	2.3	25.4	0.6	2.8	20.4	0.7	3.2	16.6	0.7	3.8	13.7	0.8	4.3	11.3	0.8	4.9	9.4	0.9	5.5
35	73.7	0.5	1.3	51.6	0.6	1.8	38.0	0.6	2.3	29.7	0.6	2.8	23.8	0.7	3.2	19.4	0.7	3.8	16.0	0.8	4.3	13.4	0.8	4.9	11.1	0.9	5.5
40	84.2	0.5	1.3	58.9	0.6	1.8	43.4	0.6	2.3	33.9	0.6	2.8	27.2	0.7	3.3	22.2	0.7	3.8	18.3	0.8	4.3	15.3	0.8	4.9	12.7	0.9	5.5
45	94.8	0.5	1.3	66.3	0.6	1.8	48.8	0.6	2.3	38.2	0.6	2.8	30.7	0.7	3.3	24.9	0.7	3.8	20.6	0.8	4.3	17.2	0.8	4.9	14.5	0.9	5.4
50	105.3	0.5	1.3	73.6	0.6	1.8	54.2	0.6	2.3	42.4	0.6	2.8	34.1	0.7	3.3	27.7	0.7	3.8	22.8	0.8	4.3	19.1	0.8	4.9	16.1	0.9	5.4
55	115.8	0.5	1.3	81.0	0.6	1.8	59.7	0.6	2.3	46.6	0.6	2.8	37.5	0.7	3.3	30.5	0.7	3.8	25.1	0.8	4.3	21.0	0.8	4.9	17.7	0.9	5.4
60	126.4	0.5	1.3	88.4	0.6	1.8	65.1	0.6	2.3	50.9	0.6	2.8	40.9	0.7	3.3	33.3	0.7	3.8	27.4	0.8	4.3	22.9	0.8	4.9	19.3	0.9	5.4
65	136.9	0.5	1.3	95.7	0.6	1.8	70.5	0.6	2.3	55.1	0.6	2.8	44.3	0.7	3.3	36.0	0.7	3.8	29.7	0.8	4.3	24.8	0.8	4.9	20.9	0.9	5.4
70	147.4	0.5	1.3	103.1	0.6	1.8	75.9	0.6	2.3	59.3	0.6	2.8	47.7	0.7	3.3	38.8	0.7	3.8	32.0	0.8	4.3	26.7	0.8	4.9	22.5	0.9	5.4
75	158.0	0.5	1.3	110.5	0.6	1.8	81.3	0.6	2.3	63.6	0.6	2.8	51.1	0.7	3.3	41.6	0.7	3.8	34.3	0.8	4.3	28.6	0.8	4.9	24.1	0.9	5.4
80	168.5	0.5	1.3	117.8	0.6	1.8	86.8	0.6	2.3	67.8	0.6	2.8	54.5	0.7	3.3	44.3	0.7	3.8	36.5	0.8	4.3	30.5	0.8	4.9	25.7	0.9	5.5
85	179.0	0.5	1.3	125.2	0.6	1.8	92.2	0.6	2.3	72.0	0.6	2.8	57.9	0.7	3.3	47.1	0.7	3.8	38.8	0.8	4.3	32.4	0.8	4.9	27.3	0.9	5.5
90	189.6	0.5	1.3	132.6	0.6	1.8	97.6	0.6	2.3	76.3	0.6	2.8	61.3	0.7	3.3	49.9	0.7	3.8	41.1	0.8	4.3	34.3	0.8	4.9	28.9	0.9	5.5
95	200.1	0.5	1.3	139.9	0.6	1.8	103.0	0.6	2.3	80.5	0.6	2.8	64.7	0.7	3.3	52.6	0.7	3.8	43.4	0.8	4.3	36.2	0.8	4.9	30.5	0.9	5.5
100	210.6	0.5	1.3	147.3	0.6	1.8	108.5	0.6	2.3	84.8	0.6	2.8	68.1	0.7	3.3	55.4	0.7	3.8	45.7	0.8	4.3	38.1	0.8	4.9	32.1	0.9	5.5
105	221.1	0.5	1.3	154.6	0.6	1.8	113.9	0.6	2.3	89.0	0.6	2.8	71.5	0.7	3.3	58.2	0.7	3.8	47.9	0.8	4.3	40.0	0.8	4.9	33.7	0.9	5.5
110	231.7	0.5	1.3	162.0	0.6	1.8	119.3	0.6	2.3	93.2	0.6	2.8	74.9	0.7	3.3	60.9	0.7	3.8	50.2	0.8	4.3	41.9	0.8	4.9	35.3	0.9	5.5
115	242.2	0.5	1.3	169.4	0.6	1.8	124.7	0.6	2.3	97.5	0.6	2.8	78.3	0.7	3.3	63.7	0.7	3.8	52.5	0.8	4.3	43.8	0.8	4.9	36.9	0.9	5.5
120	252.7	0.5	1.3	176.7	0.6	1.8	130.2	0.6	2.3	101.7	0.6	2.8	81.7	0.7	3.3	66.5	0.7	3.8	54.8	0.8	4.3	45.7	0.8	4.9	38.5	0.9	5.5
125	263.3	0.5	1.3	184.1	0.6	1.8	135.6	0.6	2.3	106.0	0.6	2.8	85.1	0.7	3.3	69.3	0.7	3.8	57.1	0.8	4.3	47.6	0.8	4.9	40.1	0.9	5.5
130	273.8	0.5	1.3	191.5	0.6	1.8	141.0	0.6	2.3	110.2	0.6	2.8	88.5	0.7	3.3	72.0	0.7	3.8	59.4	0.8	4.3	49.5	0.8	4.9	41.7	0.9	5.5
135	284.3	0.5	1.3	198.8	0.6	1.8	146.4	0.6	2.3	114.4	0.6	2.8	91.9	0.7	3.3	74.8	0.7	3.8	61.6	0.8	4.3	51.4	0.8	4.9	43.3	0.9	5.5
140	294.9	0.5	1.3	206.2	0.6	1.8	151.8	0.6	2.3	118.7	0.6	2.8	95.3	0.7	3.3	77.6	0.7	3.8	63.9	0.8	4.3	53.3	0.8	4.9	44.9	0.9	5.5
145	305.4	0.5	1.3	213.6	0.6	1.8	157.3	0.6	2.3	122.9	0.6	2.8	98.7	0.7	3.3	80.3	0.7	3.8	66.2	0.8	4.3	55.2	0.8	4.9	46.5	0.9	5.5
150	315.9	0.5	1.3	220.9	0.6	1.8	162.7	0.6	2.3	127.1	0.6	2.8	102.1	0.7	3.3	83.1	0.7	3.8	68.5	0.8	4.3	57.1	0.8	4.9	48.1	0.9	5.5

RETARDANCE "D" AND "C"

NOTE: Width and Depth dimensions are in feet; Velocity measurements are in feet per second:
Depth "D" does not include allowance for freeboard or settlement.

Table GS-4 Parabolic Grass Swale Design Sheet 13 of 14

V1 FOR RETARDANCE "D", TOP WIDTH (T), DEPTH' (D), AND V2 FOR RETARDANCE "C"

Grade 8.00 Percent

Q̄ CFS	V1=2.0			V1=2.5			V1=3.0			V1=3.5			V1=4.0			V1=4.5			V1=5.0			V1=5.5			V1=6.0		
	T̄	D̄	V̄2	T̄	D̄	V̄2	T̄	D̄	V̄2	T̄	D̄	V̄2	T̄	D̄	V̄2	T̄	D̄	V̄2	T̄	D̄	V̄2	T̄	D̄	V̄2	T̄	D̄	V̄2
5	12.0	0.5	1.3	8.5	0.5	1.7	6.2	0.5	2.2	4.6	0.6	2.7	3.7	0.6	3.2	2.9	0.7	3.6									
10	24.1	0.5	1.3	16.9	0.5	1.7	12.6	0.5	2.2	9.6	0.6	2.7	7.8	0.6	3.2	6.3	0.6	3.7	5.1	0.7	4.2	4.2	0.8	4.8	3.2	0.9	5.3
15	36.1	0.5	1.3	25.3	0.5	1.7	18.9	0.5	2.2	14.4	0.6	2.7	11.8	0.6	3.2	9.7	0.6	3.7	7.9	0.7	4.2	6.5	0.7	4.8	5.4	0.8	5.3
20	48.1	0.5	1.3	33.8	0.5	1.7	25.2	0.5	2.2	19.2	0.6	2.7	15.8	0.6	3.2	12.9	0.6	3.7	10.7	0.7	4.2	8.8	0.7	4.8	7.4	0.8	5.3
25	60.1	0.5	1.3	42.2	0.5	1.7	31.5	0.5	2.2	24.0	0.6	2.7	19.7	0.6	3.2	16.2	0.6	3.7	13.4	0.7	4.2	11.2	0.7	4.7	9.3	0.8	5.3
30	72.1	0.5	1.3	50.6	0.5	1.7	37.8	0.5	2.2	28.8	0.6	2.7	23.6	0.6	3.2	19.4	0.6	3.7	16.1	0.7	4.2	13.5	0.7	4.8	11.3	0.7	5.3
35	84.1	0.5	1.3	59.1	0.5	1.7	44.1	0.5	2.2	33.6	0.6	2.7	27.6	0.6	3.2	22.6	0.6	3.7	18.7	0.7	4.2	15.7	0.7	4.8	13.3	0.7	5.3
40	96.2	0.5	1.3	67.5	0.5	1.7	50.4	0.5	2.2	38.4	0.6	2.7	31.5	0.6	3.2	25.8	0.6	3.7	21.4	0.7	4.2	17.9	0.7	4.8	15.2	0.7	5.3
45	108.2	0.5	1.3	76.0	0.5	1.7	56.7	0.5	2.2	43.2	0.6	2.7	35.4	0.6	3.2	29.0	0.6	3.7	24.1	0.7	4.2	20.2	0.7	4.8	17.1	0.7	5.3
50	120.2	0.5	1.3	84.4	0.5	1.7	63.0	0.5	2.2	48.0	0.6	2.7	39.4	0.6	3.2	32.3	0.6	3.7	26.8	0.7	4.2	22.4	0.7	4.8	19.0	0.7	5.3
55	132.2	0.5	1.3	92.8	0.5	1.7	69.3	0.5	2.2	52.8	0.6	2.7	43.3	0.6	3.2	35.5	0.6	3.7	29.4	0.7	4.2	24.7	0.7	4.8	20.9	0.7	5.3
60	144.2	0.5	1.3	101.3	0.5	1.7	75.6	0.5	2.2	57.6	0.6	2.7	47.2	0.6	3.2	38.7	0.6	3.7	32.1	0.7	4.2	26.9	0.7	4.8	22.8	0.7	5.3
65	156.3	0.5	1.3	109.7	0.5	1.7	81.8	0.5	2.2	62.4	0.6	2.7	51.2	0.6	3.2	41.9	0.6	3.7	34.8	0.7	4.2	29.1	0.7	4.8	24.7	0.7	5.3
70	168.3	0.5	1.3	118.2	0.5	1.7	88.1	0.5	2.2	67.2	0.6	2.7	55.1	0.6	3.2	45.2	0.6	3.7	37.5	0.7	4.2	31.4	0.7	4.8	26.6	0.7	5.3
75	180.3	0.5	1.3	126.6	0.5	1.7	94.4	0.5	2.2	72.0	0.6	2.7	59.0	0.6	3.2	48.4	0.6	3.7	40.1	0.7	4.2	33.6	0.7	4.8	28.5	0.7	5.3
80	192.3	0.5	1.3	135.0	0.5	1.7	100.7	0.5	2.2	76.8	0.6	2.7	63.0	0.6	3.2	51.6	0.6	3.7	42.8	0.7	4.2	35.9	0.7	4.8	30.3	0.7	5.3
85	204.3	0.5	1.3	143.5	0.5	1.7	107.0	0.5	2.2	81.6	0.6	2.7	66.9	0.6	3.2	54.9	0.6	3.7	45.5	0.7	4.2	38.1	0.7	4.8	32.2	0.7	5.3
90	216.4	0.5	1.3	151.9	0.5	1.7	113.3	0.5	2.2	86.4	0.6	2.7	70.8	0.6	3.2	58.1	0.6	3.7	48.1	0.7	4.2	40.3	0.7	4.8	34.1	0.7	5.3
95	228.4	0.5	1.3	160.3	0.5	1.7	119.6	0.5	2.2	91.2	0.6	2.7	74.8	0.6	3.2	61.3	0.6	3.7	50.8	0.7	4.2	42.6	0.7	4.8	36.0	0.7	5.3
100	240.4	0.5	1.3	168.8	0.5	1.7	125.9	0.5	2.2	96.0	0.6	2.7	78.7	0.6	3.2	64.5	0.6	3.7	53.5	0.7	4.2	44.8	0.7	4.8	37.9	0.7	5.3
105	252.4	0.5	1.3	177.2	0.5	1.7	132.2	0.5	2.2	100.8	0.6	2.7	82.6	0.6	3.2	67.8	0.6	3.7	56.2	0.7	4.2	47.1	0.7	4.8	39.8	0.7	5.3
110	264.4	0.5	1.3	185.7	0.5	1.7	138.5	0.5	2.2	105.6	0.6	2.7	86.6	0.6	3.2	71.0	0.6	3.7	58.8	0.7	4.2	49.3	0.7	4.8	41.7	0.7	5.3
115	276.5	0.5	1.3	194.1	0.5	1.7	144.8	0.5	2.2	110.4	0.6	2.7	90.5	0.6	3.2	74.2	0.6	3.7	61.5	0.7	4.2	51.5	0.7	4.8	43.6	0.7	5.3
120	288.5	0.5	1.3	202.5	0.5	1.7	151.1	0.5	2.2	115.2	0.6	2.7	94.4	0.6	3.2	77.4	0.6	3.7	64.2	0.7	4.2	53.8	0.7	4.8	45.5	0.7	5.3
125	300.5	0.5	1.3	211.0	0.5	1.7	157.4	0.5	2.2	120.0	0.6	2.7	98.4	0.6	3.2	80.7	0.6	3.7	66.9	0.7	4.2	56.0	0.7	4.8	47.4	0.7	5.3
130	312.5	0.5	1.3	219.4	0.5	1.7	163.7	0.5	2.2	124.8	0.6	2.7	102.3	0.6	3.2	83.9	0.6	3.7	69.5	0.7	4.2	58.3	0.7	4.8	49.3	0.7	5.3
135	324.5	0.5	1.3	227.9	0.5	1.7	170.0	0.5	2.2	129.6	0.6	2.7	106.2	0.6	3.2	87.1	0.6	3.7	72.2	0.7	4.2	60.5	0.7	4.8	51.2	0.7	5.3
140	336.6	0.5	1.3	236.3	0.5	1.7	176.3	0.5	2.2	134.4	0.6	2.7	110.2	0.6	3.2	90.3	0.6	3.7	74.9	0.7	4.2	62.7	0.7	4.8	53.1	0.7	5.3
145	348.6	0.5	1.3	244.7	0.5	1.7	182.6	0.5	2.2	139.2	0.6	2.7	114.1	0.6	3.2	93.6	0.6	3.7	77.6	0.7	4.2	65.0	0.7	4.8	55.0	0.7	5.3
150	360.6	0.5	1.3	253.2	0.5	1.7	188.9	0.5	2.2	144.0	0.6	2.7	118.0	0.6	3.2	96.8	0.6	3.7	80.2	0.7	4.2	67.2	0.7	4.8	56.9	0.7	5.3

RETARDANCE "D" AND "C"

NOTE: Width and Depth dimensions are in feet; Velocity measurements are in feet per second
Depth "D" does not include allowance for freeboard or settlement

Table GS-4 Parabolic Grass Swale Design Sheet 14 of 14

V1 FOR RETARDANCE "D", TOP WIDTH (T), DEPTH (D), AND V2 FOR RETARDANCE "C"

Grade 10.00 Percent

Q CFS	V1=2.0			V1=2.5			V1=3.0			V1=3.5			V1=4.0			V1=4.5			V1=5.0			V1=5.5			V1=6.0		
	T	D	V2	T	D	V2	T	D	V2	T	D	V2	T	D	V2	T	D	V2	T	D	V2	T	D	V2	T	D	V2
5	13.3	0.4	1.3	9.4	0.5	1.7	6.8	0.5	2.2	5.3	0.5	2.6	4.1	0.6	3.2	3.4	0.6	3.6	2.6	0.7	4.1						
10	26.6	0.4	1.3	18.7	0.5	1.7	13.8	0.5	2.2	10.9	0.5	2.6	8.5	0.6	3.2	7.1	0.6	3.6	5.9	0.6	4.1	4.9	0.7	4.7	4.0	0.7	5.3
15	39.9	0.4	1.3	28.0	0.5	1.7	20.7	0.5	2.2	16.3	0.5	2.6	12.8	0.6	3.2	10.9	0.6	3.6	9.0	0.6	4.1	7.5	0.6	4.7	6.3	0.7	5.2
20	53.2	0.4	1.3	37.4	0.5	1.7	27.6	0.5	2.2	21.7	0.5	2.7	17.0	0.6	3.2	14.5	0.6	3.6	12.1	0.6	4.1	10.2	0.6	4.6	8.5	0.7	5.2
25	66.5	0.4	1.3	46.7	0.5	1.7	34.5	0.5	2.2	27.1	0.5	2.7	21.3	0.6	3.2	18.1	0.6	3.6	15.1	0.6	4.1	12.7	0.6	4.7	10.8	0.7	5.2
30	79.8	0.4	1.3	56.1	0.5	1.7	41.4	0.5	2.2	32.5	0.5	2.7	25.5	0.6	3.2	21.7	0.6	3.6	18.1	0.6	4.1	15.2	0.6	4.7	12.9	0.7	5.2
35	93.1	0.4	1.3	65.4	0.5	1.7	48.3	0.5	2.2	37.9	0.5	2.7	29.8	0.6	3.2	25.3	0.6	3.6	21.1	0.6	4.1	17.8	0.6	4.7	15.1	0.7	5.2
40	106.4	0.4	1.3	74.7	0.5	1.7	55.2	0.5	2.2	43.3	0.5	2.7	34.0	0.6	3.2	29.0	0.6	3.6	24.1	0.6	4.1	20.3	0.6	4.7	17.2	0.7	5.2
45	119.7	0.4	1.3	84.1	0.5	1.7	62.1	0.5	2.2	48.8	0.5	2.7	38.3	0.6	3.2	32.6	0.6	3.6	27.2	0.6	4.1	22.8	0.6	4.7	19.4	0.7	5.2
50	133.0	0.4	1.3	93.4	0.5	1.7	69.0	0.5	2.2	54.2	0.5	2.7	42.5	0.6	3.2	36.2	0.6	3.6	30.2	0.6	4.1	25.4	0.6	4.7	21.5	0.7	5.2
55	146.3	0.4	1.3	102.8	0.5	1.7	75.9	0.5	2.2	59.6	0.5	2.7	46.8	0.6	3.2	39.8	0.6	3.6	33.2	0.6	4.1	27.9	0.6	4.7	23.7	0.7	5.2
60	159.6	0.4	1.3	112.1	0.5	1.7	82.8	0.5	2.2	65.0	0.5	2.7	51.0	0.6	3.2	43.4	0.6	3.6	36.2	0.6	4.1	30.5	0.6	4.7	25.9	0.7	5.2
65	172.9	0.4	1.3	121.4	0.5	1.7	89.7	0.5	2.2	70.4	0.5	2.7	55.3	0.6	3.2	47.1	0.6	3.6	39.2	0.6	4.1	33.0	0.6	4.7	28.0	0.7	5.2
70	186.2	0.4	1.3	130.8	0.5	1.7	96.6	0.5	2.2	75.8	0.5	2.7	59.5	0.6	3.2	50.7	0.6	3.6	42.2	0.6	4.1	35.5	0.6	4.7	30.2	0.7	5.2
75	199.5	0.4	1.3	140.1	0.5	1.7	103.5	0.5	2.2	81.2	0.5	2.7	63.8	0.6	3.2	54.3	0.6	3.6	45.2	0.6	4.1	38.1	0.6	4.7	32.3	0.7	5.2
80	212.8	0.4	1.3	149.5	0.5	1.7	110.5	0.5	2.2	86.7	0.5	2.7	68.0	0.6	3.2	57.9	0.6	3.6	48.3	0.6	4.1	40.6	0.6	4.7	34.5	0.7	5.2
85	226.1	0.4	1.3	158.8	0.5	1.7	117.4	0.5	2.2	92.1	0.5	2.7	72.3	0.6	3.2	61.5	0.6	3.6	51.3	0.6	4.1	43.1	0.6	4.7	36.6	0.7	5.2
90	239.4	0.4	1.3	168.1	0.5	1.7	124.3	0.5	2.2	97.5	0.5	2.7	76.5	0.6	3.2	65.2	0.6	3.6	54.3	0.6	4.1	45.7	0.6	4.7	38.8	0.7	5.2
95	252.7	0.4	1.3	177.5	0.5	1.7	131.2	0.5	2.2	102.9	0.5	2.7	80.8	0.6	3.2	68.8	0.6	3.6	57.3	0.6	4.1	48.2	0.6	4.7	40.9	0.7	5.2
100	266.0	0.4	1.3	186.8	0.5	1.7	138.1	0.5	2.2	108.3	0.5	2.7	85.0	0.6	3.2	72.4	0.6	3.6	60.3	0.6	4.1	50.7	0.6	4.7	43.1	0.7	5.2
105	279.3	0.4	1.3	196.2	0.5	1.7	145.0	0.5	2.2	113.7	0.5	2.7	89.3	0.6	3.2	76.0	0.6	3.6	63.3	0.6	4.1	53.3	0.6	4.7	45.2	0.7	5.2
110	292.6	0.4	1.3	205.5	0.5	1.7	151.9	0.5	2.2	119.2	0.5	2.7	93.5	0.6	3.2	79.6	0.6	3.6	66.4	0.6	4.1	55.8	0.6	4.7	47.4	0.7	5.2
115	305.9	0.4	1.3	214.9	0.5	1.7	158.8	0.5	2.2	124.6	0.5	2.7	97.8	0.6	3.2	83.3	0.6	3.6	69.4	0.6	4.1	58.3	0.6	4.7	49.5	0.7	5.3
120	319.2	0.4	1.3	224.2	0.5	1.7	165.7	0.5	2.2	130.0	0.5	2.7	102.0	0.6	3.2	86.9	0.6	3.6	72.4	0.6	4.1	60.9	0.6	4.7	51.7	0.7	5.3
125	332.5	0.4	1.3	233.5	0.5	1.7	172.6	0.5	2.2	135.4	0.5	2.7	106.3	0.6	3.2	90.5	0.6	3.6	75.4	0.6	4.1	63.4	0.6	4.7	53.8	0.7	5.3
130	345.8	0.4	1.3	242.9	0.5	1.7	179.5	0.5	2.2	140.8	0.5	2.7	110.5	0.6	3.2	94.1	0.6	3.6	78.4	0.6	4.1	66.0	0.6	4.7	56.0	0.7	5.3
135	359.1	0.4	1.3	252.2	0.5	1.7	186.4	0.5	2.2	146.2	0.5	2.7	114.8	0.6	3.2	97.7	0.6	3.6	81.4	0.6	4.1	68.5	0.6	4.7	58.1	0.7	5.3
140	372.4	0.4	1.3	261.6	0.5	1.7	193.3	0.5	2.2	151.7	0.5	2.7	119.0	0.6	3.2	101.3	0.6	3.6	84.4	0.6	4.1	71.0	0.6	4.7	60.3	0.7	5.3
145	385.7	0.4	1.3	270.9	0.5	1.7	200.2	0.5	2.2	157.1	0.5	2.7	123.3	0.6	3.2	105.0	0.6	3.6	87.5	0.6	4.1	73.6	0.6	4.7	62.5	0.7	5.3
150	399.0	0.4	1.3	280.2	0.5	1.7	207.1	0.5	2.2	162.5	0.5	2.7	127.5	0.6	3.2	108.6	0.6	3.6	90.5	0.6	4.1	76.1	0.6	4.7	64.6	0.7	5.3

RETARDANCE "D" AND "C"

NOTE: Width and Depth dimensions are in feet; Velocity measurements are in feet per second; Depth "D" does not include allowance for freeboard or settlement.

H. Sediment Barrier (SB)

Sediment Barrier (SB)

Practice Description

A sediment barrier is a temporary structure used across a landscape to reduce the quantity of sediment that is moving farther downslope. Commonly used barriers include silt fence (a geotextile fabric which is trenched into the ground and attached to supporting posts) or hay bales trenched into the ground. Other barrier materials include sand bags, brush piles and various man-made materials and devices that can be used in a similar manner as silt fence and hay bales.

This practice applies where sheet and rill erosion occurs on small disturbed areas. Barriers intercept runoff from upslope to form ponds that temporarily store runoff and allow sediment to settle out of the water and stay on the construction site.

Planning Considerations

Sediment barriers may be used on developing sites. They should be installed on the contour so that flow will not concentrate and cause bypassing by runoff going around the end of the barrier or overtopping because of lack of storage capacity.

The most commonly used sediment barriers are silt fences, manufactured sediment logs (and there are several names used instead of logs) and hay bales. Silt fences and manufactured sediment logs are preferable to hay bales because they are more likely to be installed correctly. The design and installation of hay bale sediment barrier is the same as the installation for Straw Bale Sediment

Traps. Manufactured sediment logs should be installed according to manufacturer's recommendations. Silt fence is the only barrier covered in this edition of the handbook.

The success of silt fences depends on a proper installation that causes the fence to develop maximum efficiency of sediment trapping. Silt fences should be carefully installed to meet the intended purpose.

A silt fence is specifically designed to retain sediment transported by sheet flow from disturbed areas, while allowing water to pass through the fence. Silt fences should be installed to be stable under the flows expected from the site. Silt fences should not be installed across streams, ditches, waterways, or other concentrated flow areas.

Silt fences are composed of woven geotextile supported between steel or wooden posts. Silt fences are commercially available with geotextile attached to the post and can be rolled out and installed by driving the post into the ground. This type of silt fence is simple to install, but more expensive than some other installations. Silt fences must be trenched in at the bottom to prevent runoff from undermining the fence and developing rills under the fence. Locations with high runoff flows or velocities should use wire reinforcement.

Design Criteria

Silt fences installations are normally limited to situations in which only sheet or overland flow is expected because they normally cannot pass the volumes of water generated by channel flows. Silt fences are normally constructed of synthetic fabric (woven geotextile) and the life is expected to be the duration of most construction projects. Silt fence fabric should conform to the requirements of Table SB-1.

The drainage area behind the silt fence should not exceed ¼ acre per 100 linear feet of silt fence for non-reinforced fence and ½ acre per 100 feet of wire reinforced fence. When all runoff from the drainage area is to be stored behind the fence (i.e. there is no stormwater disposal system in place) the maximum slope length behind the fence should not exceed those shown in Table SB-2.

Type A Silt Fence

Type A fence is 36" wide with wire reinforcements and is used on sites needing the highest degree of protection by a silt fence. The wire reinforcement is necessary because this type A silt fence is used for the highest flow situations and has almost 3 times the flow rate as type B silt fence. Type A silt fence should be used where runoff flows or velocities are particularly high or where slopes exceed a vertical height of 10 feet.

Provide a riprap splash pad or other outlet protection device for any point where flow may overtop the sediment fence. Ensure that the maximum height of the fence at a protected, reinforced, outlet does not exceed 1foot and that support post spacing does not exceed 4 feet.

The silt fence should be installed as shown in Figure SB-1. Materials for posts and fasteners are shown in Tables SB-3 and SB-4. Details for overlap of the silt fence and fastener placement are shown in Figure SB-4.

Table SB-1 Specifications for Silt Fence

Specifications	Type A	Type B	Type C
Tensile Strength (Lbs. Min.[1] ASTM D-4632)	Warp – 260 Fill – 100	Warp – 120 Fill – 100	Warp – 120 Fill – 100
Elongation (% Max.) (ASTM D-4632)	40	40	40
AOS (Apparent Opening Size) (Max. Sieve Size) (ASTM D-4751)	no.30	no.30	no.30
Flow Rate (Gal/Min/Sq. Ft.) (GDT-87)	70	25	25
Ultraviolet Stability[2] (ASTM D-4632 after 300 hours weathering in accordance with ASTM D-4355)	80	80	80
Bursting Strength (PSI Min.) (ASTM D-3786 Diaphragm Bursting Strength Tester)	175	175	175
Minimum Fabric Width (Inches)	36	36	22

[1] Minimum roll average of 5 specimens.
[2] Percent of required initial minimum tensile strength.

Table SB-2 Slope Limitations for Silt Fence

Land Slope (Percent)	Maximum Slope Length Above Fence (Feet)
<2	100
2 to 5	75
5 to 10	50
10 to 20*	25
>20	15

*In areas where the slope is greater than 10%, a flat area length of 10 feet between the toe of the slope to the fence should be provided.

Type B Silt Fence

This 36” wide filter fabric should be used on developments where the life of the project is greater than or equal to 6 months.

The silt fence should be installed as shown in Figure SB-2. Materials for posts and fasteners are shown in Tables SB-3 and SB-4. Details for overlap of the silt fence and fastener placement are shown in Figure SB-4.

Type C Silt Fence

Though only 22" wide, this filter fabric allows the same flow rate as Type B silt fence. Type C silt fence should be limited to use on relatively minor projects, such as residential home sites or small commercial developments where permanent stabilization will be achieved in less than 6 months.

The silt fence should be installed as shown in Figure SB-3. Materials for posts and fasteners are shown in Tables SB-3 and SB-4. Details for overlap of the silt fence and fastener placement are shown in Figure SB-4.

Table SB-3 Post Size for Silt Fence

	Minimum Length	Type of Post	Size of Post
Type A	4'	Steel	1.3lb./ft. min.
Type B	4'	Soft Wood Oak Steel	3" diameter or 2X4 1.5" X 1.5" 1.3lb./ft. min.
Type C	3'	Soft Wood Oak Steel	2" diameter or 2X2 1" X 1" .75lb./ft. min.

Table SB-4 Wood Post Fasteners for Silt Fence

	Gauge	Crown	Legs	Staples/Post
Wire Staples	17 min.	¾" wide	½" long	5 min.
	Gauge	Length	Button Heads	Nail/Post
Nails	14 min.	1"	¾" long	4 min.

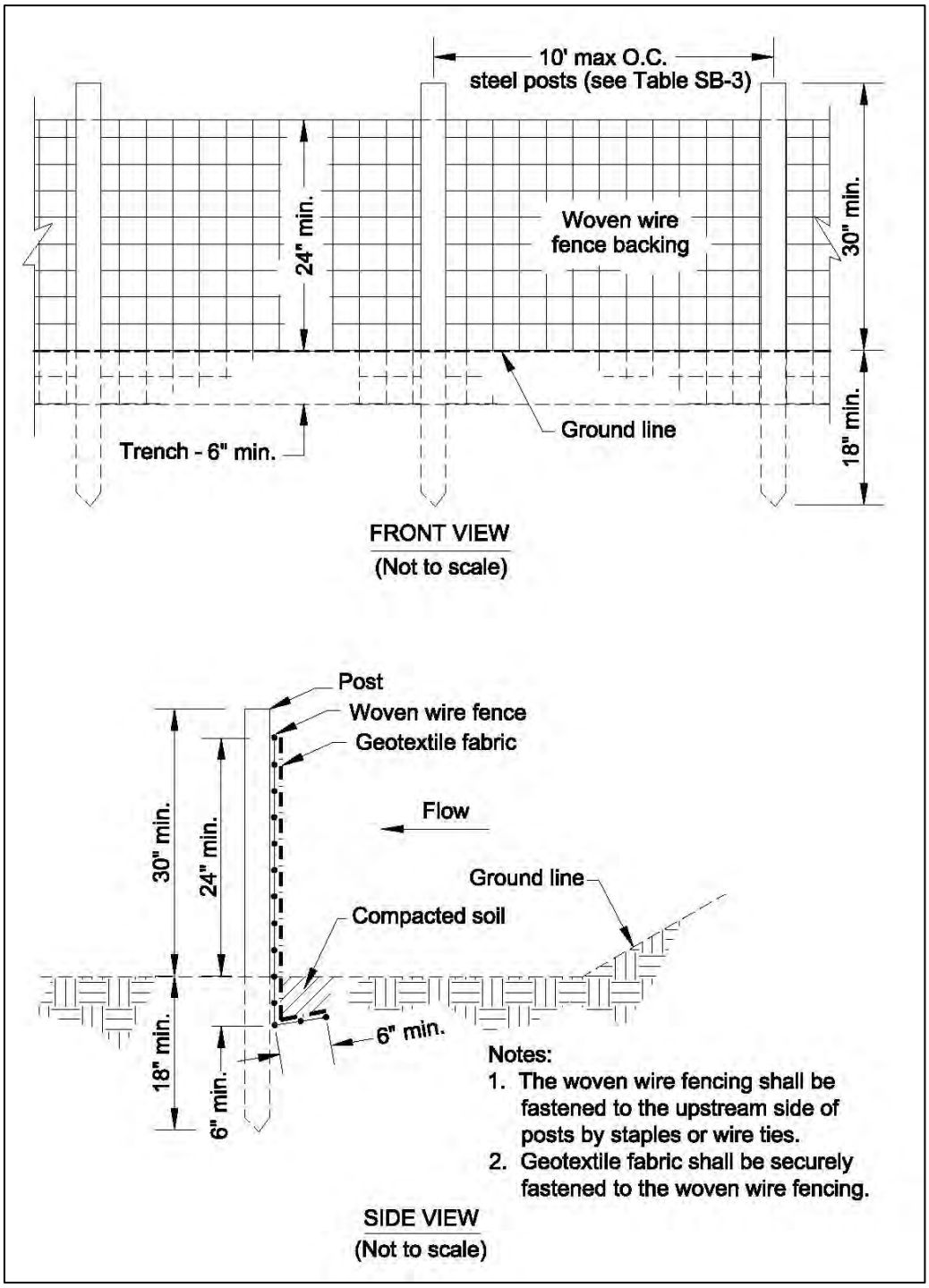

Figure SB-1 Silt Fence-Type A

(1) For fabric material requirements see Table SB-1
(2) For post material requirements see Tables SB-3 and SB-4

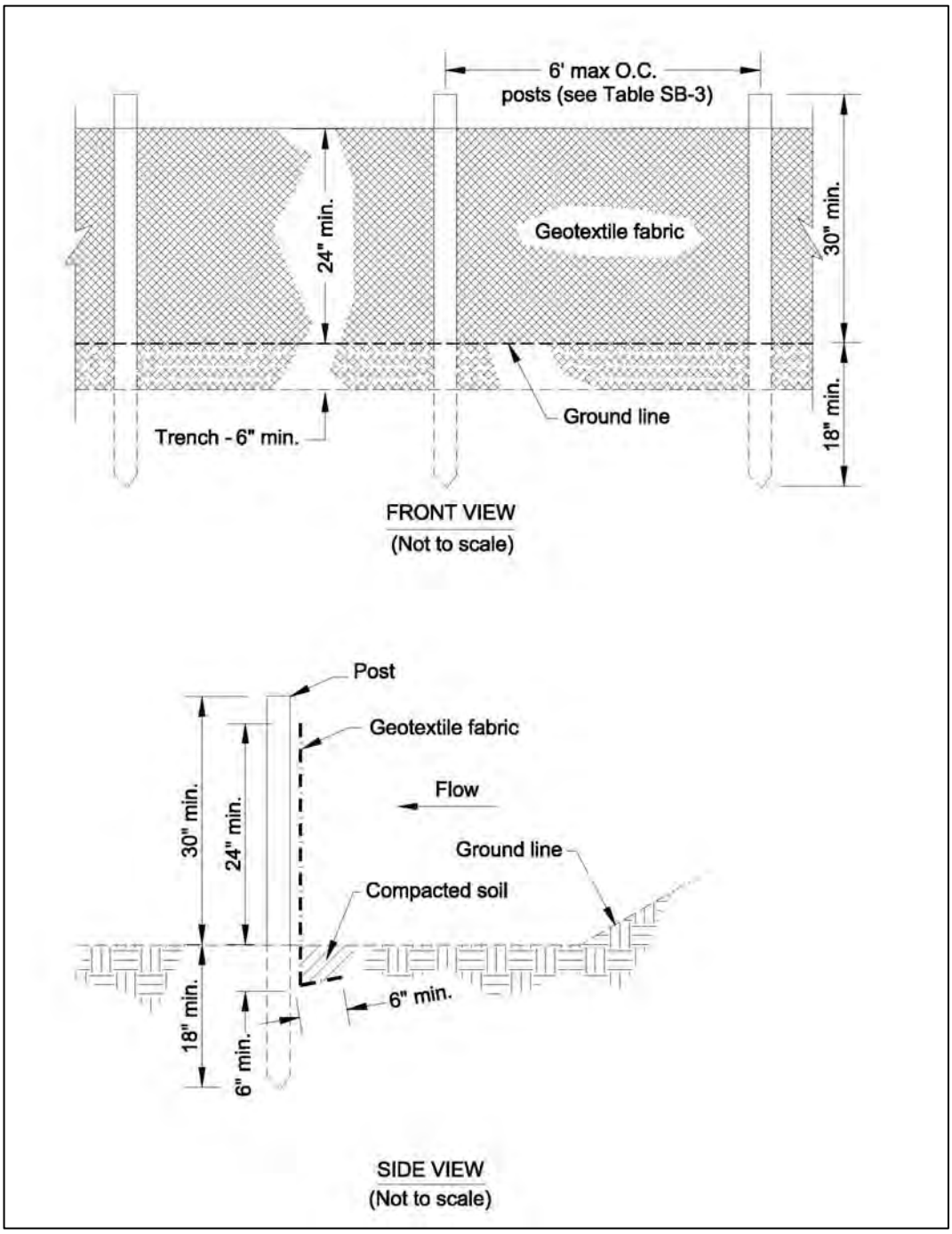

Figure SB-2 Silt Fence - Type B

(1) For fabric material requirements see Table SB-1
(2) For post material requirements see Tables SB-3 and SB-4

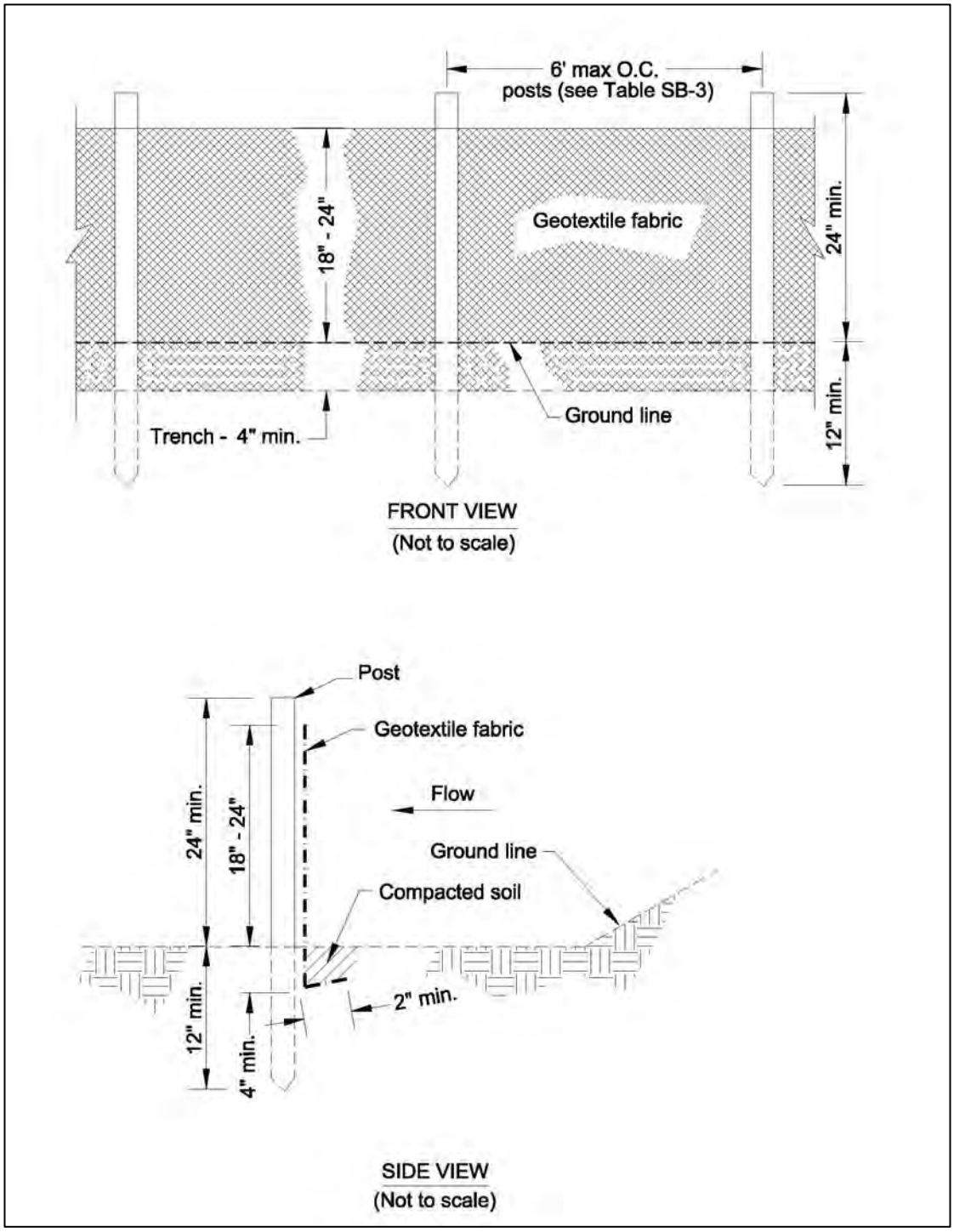

Figure SB-3 Silt Fence – Type C

(1) For fabric material requirements see Table SB-1
(2) For post material requirements see Tables SB-3 and SB-4

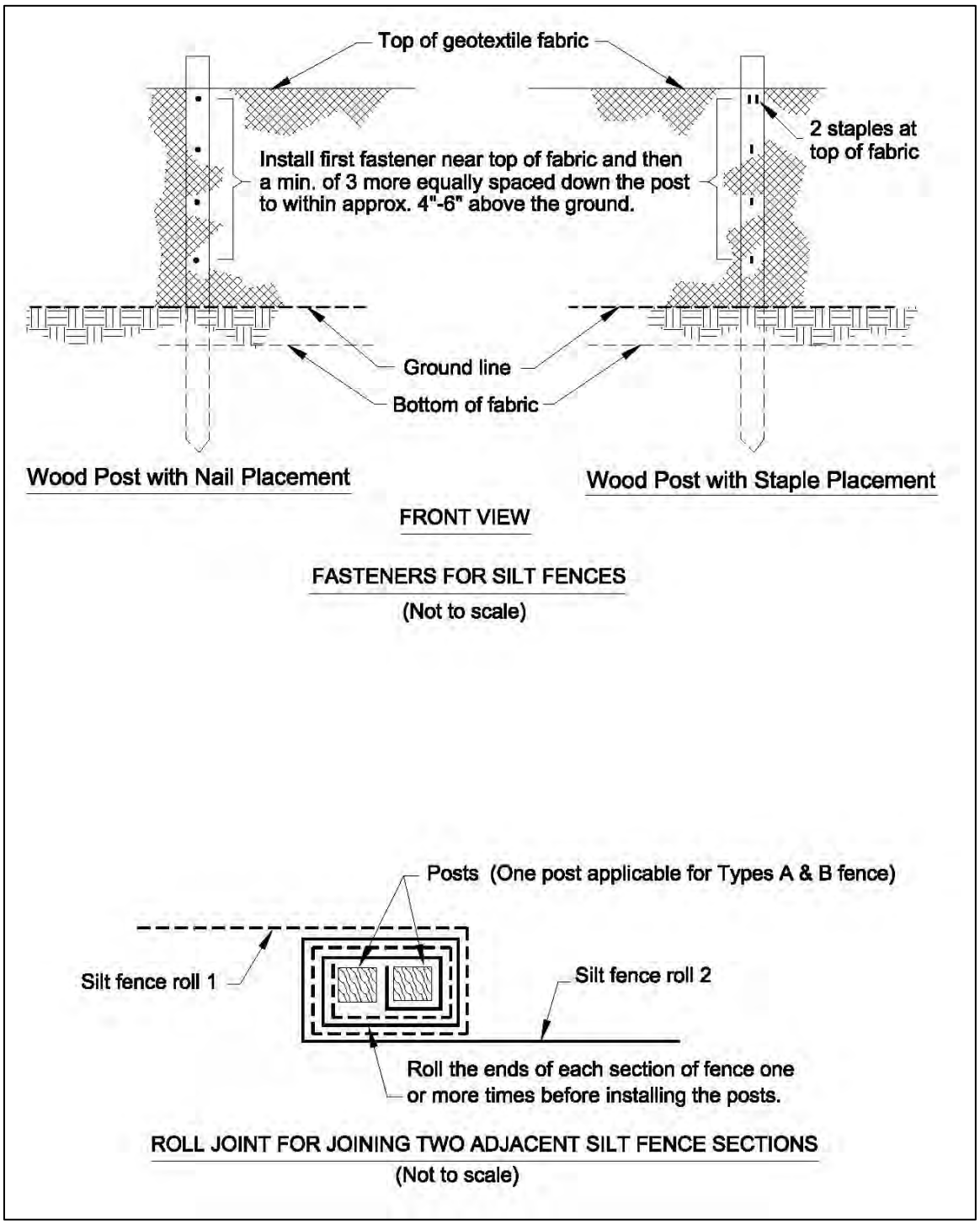

Figure SB-4 Silt Fence Installation Details

I. Corrective Action Log

Attachment I - Corrective Action Log

Project Name: Corrective Measures Implementation Plan RSA-204, Oxidizer Facility, Building 7691, Operable Unit 10
Contact:

Inspection Date	Inspector Name(s)	Description of BMP Deficiency	Corrective Action Needed (including planned date/responsible person)	Date Action Taken/Responsible person

J. Amendment Log

Attachment J - Amendment Log

Project Name: Corrective Measures Implementation Plan RSA-204, Oxidizer Facility, Building 7691, Operable Unit 10
Contact:

Amendment No.	Description of Amendment	Date of Amendment	Amendment Prepared by [Name(s) and Title]

K. Grading and Stabilization Log

Attachment K - Grading and Stabilization Activities Log

Project Name: Corrective Measures Implementation Plan RSA-204, Oxidizer Facility, Building 7691, Operable Unit 10
Contact:

Date Grading Activity Initiated	Description of Grading Activity	Date Grading Activity Ceased (Indicate Temporary or Permanent)	Date When Stabilization Measures are Initiated	Description of Stabilization Measure(s) and Location(s)

L. Rainfall Documentation Log

Attachment L - Rainfall Documentation and Observations

Project Name or Description: Corrective Measures Implementation Plan RSA-204, Oxidizer Facility, Building 7691, Operable Unit 10
Project Location: U.S. Army Garrison - Redstone, Madison County, Alabama
ADEM Permit Number:

Date	Start Time	End Time	Total Depth (to tenth of inch)	Observations (rainfall intense, moderate, etc.)	Initials

APPENDIX H

ENGINEERING CALCULATIONS

Table H-1
CB&I Federal Services, LLC
CMIP Calculations

By: C. Scott Wilson Date: 9/16/2015 Site: RSA-204 Project #: 147104
Checked: Gregary N. Jones Date: 9/17/2015 Subject: Nutrient Demand - Southern Area

Emulsified Vegetable Oil (EVO) - EOS 450

Specific Gravity:	0.96-0.98		published by EOS Remediation, LLC
Density:	8.09	lb/gal	
Soybean Oil:	45	% by weight	published by EOS Remediation, LLC
Drums Needed:	3	drums (55 gal)	calculated using EOS Remediation, LLC design tool

Carbon content of soybean oil

Major component is linoleic acid
$CH_3(CH_2)_4CH{=}CHCH_2CH{=}CH(CH_2)_7CO_2$, or $C_{19}H_{34}O_2$

Formula weight:	294.48	g/mole
Carbon content:	77.50%	

element	molecular weight
C	12.011
H	1.0079
O	15.9994
N	14.0067
P	30.9738

Carbon content of EOS 450

Drums Needed:	3	drums (55 gal)
Density:	8.09	lb/gal
Volume of EVO:	165	gal
Mass of EVO:	1336	lbs
% Soybean Oil:	45	% by weight
Mass of carbon:	466	lbs

Nutrient demand

assume 100C:10N:1P ratio

C:	466	lbs
N:	46.6	lbs
P:	4.66	lbs

Diammonium Phosphate (DAP) Requirement

$(NH_4)_2HPO_4$

Formula weight:	132.06	g/mole
Nitrogen content:	21.21%	
lbs DAP for 1 lb N:	4.71	lbs
DAP needed:	219.57	lbs

Treatment Zone

Area[1]:	4,725	ft2				Injection area approximately 105' x 45'
Thickness:	14	ft				
Volume:	66,150	ft3				
Effective Porosity[2]:	0.0199					
Pore Volume:	1,316	ft3				
Injection Volume:	92	ft3	=	689	gal	Assume 7% of available pore volume

Solution % by weight

Water:	4,374.94	lbs	=	74	%
EVO:	1,335.62	lbs	=	23	%
DAP:	219.57	lbs	=	4	%
Total:	5,930.13	lbs	=	100	%

Injection Points

DPT points[1]:	16	
injection wells:	9	
injection thickness:	14	ft
injection interval:	2.5	ft
volume per point:	27.6	gal
volume per interval:	4.9	gal

Notes:

[1] Injection area and proposed injection locations shown on Figure 4-1.

[2] Average effective porosity as calculated for groundwater site RSA-146.

Table H-2
Carbon Demand Calculation
RSA-204
Southeast (Area 1)
Redstone Arsenal, Madison County, Alabama

EOS Remediation, Inc.

EOS® SOURCE AREA & DNAPL DESIGN WORKSHEET

Version 2.1 Rev. Date: March 7, 2007
www.EOSRemediation.com

Help

Site Name:	RSA-204
Location:	SE - Area 1
Project No.:	

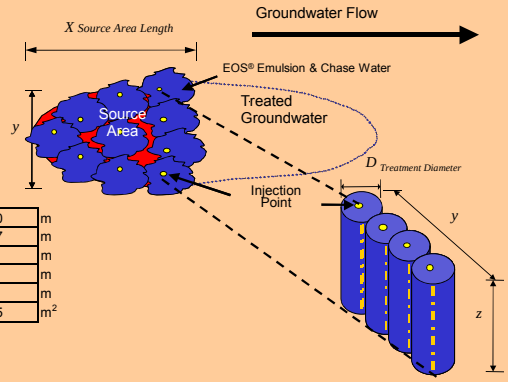

Step 1: Select a Substrate from the EOS® Family of Bioremediation Products

Substrate Selected (pick from drop down list): EOS 450
For Product Literature Click Here

Step 2: EOS® Consumption During Contaminant Biodegradation / Biotransformation

Section A: Source Area Dimensions

Length of treatment area parallel to groundwater flow, "x"	105	ft	32.0	m
Width of treatment area perpendicular to groundwater flow, "y"	45	ft	13.7	m
Minimum depth to contamination	12	ft	3.7	m
Maximum depth of contamination	26	ft	7.9	m
Treatment thickness, "z"	14	ft	4.3	m
Treatment zone cross-sectional area, A = y * z	630	ft^2	58.5	m^2

Section B: Groundwater Flow Rate / Site Data

Soil Characteristics

Nominal Soil Type (pick from drop down list)	Clay			
Total Porosity (accept default or enter n)	0.47	(decimal)		
Effective Porosity (accept default or enter n_e)	0.00	(decimal)		
Soil bulk density; (1-n)*2.65 g/cc (accept calculated or enter dry bulk density)	1.40	g/cc	88	lbs / ft^3
Fraction of organic carbon: foc	0.0100	range: 0.0001 to 0.01		

Hydraulic Characteristics

Hydraulic Conductivity (accept default or enter K)	0.15	ft/day	5.3E-05	cm/sec
Hydraulic Gradient (accept default or enter i)	0.001	ft/ft		

Note: Since the hydraulic gradient ($i = dh/dx$) is negative, we ask you to enter $-i$ in the EOS® Design Tool so that you can enter a positive number for convenience.

Non-reactive Transport Velocity, $V_x = -(K \times i) / n_e$	0.10	ft/day	0.030	m/day
Groundwater flow rate through treatment zone, $Q = -KiA$	0.71	gallons/day	2.68	L/day

Section C: Calculated Contact Length

Contact time (τ) between oil and contaminants (accept default or enter τ)	90	typical values 60 to 180 days, see comment
Calculated Contact Length (x) = $\tau * V_x$	9.0	ft

Treatment zone volume	66,150	ft^3	1,873	m^2
Treatment zone groundwater volume (volume * porosity)	232,557	gallons	880,385	L

Section D: Design Lifespan For One Application

	3	year(s)	typical values 5 to 10 years	
Estimated total groundwater volume treated over design life	233,331	gallons	883,315	L

Section E: Electron Acceptors

Dissolved Phase Electron Donor Demand

Inputs	Typical Value	GW Conc. (mg/L)	MW (g/mole)	e^- equiv./ mole	Stoichmetry *Contaminant/H 2 (wt/wt H_2)*	Hydrogen Demand (g H_2)
Dissolved Oxygen (DO)	0 to 8	4	32.0	4	7.94	445.1633259
Nitrate Nitrogen (NO_3^- - N)	1 to 10	5	62.0	5	12.30	358.9608501
Sulfate (SO_4^{2-})	10 to 500	10	96.1	8	11.91	741.4661741
Tetrachloroethene (PCE), C_2Cl_4			165.8	8	20.57	
Trichloroethene (TCE), C_2HCl_3			131.4	6	21.73	
cis-1,2-dichloroethene (c-DCE), $C_2H_2Cl_2$			96.9	4	24.05	
Vinyl Chloride (VC), C_2H_3Cl			62.5	2	31.00	
Carbon tetrachloride, CCl_4			153.8	8	19.08	
Chloroform, $CHCl_3$			119.4	6	19.74	
sym- tetrachloroethane, $C_2H_2Cl_4$			167.8	8	20.82	
1,1,1-Trichloroethane (TCA), CH_3CCl_3			133.4	6	22.06	
1,1-Dichloroethane (DCA), CH_2CHCl_2			99.0	4	24.55	
Chloroethane, C_2H_5Cl			64.9	2	32.18	
Perchlorate, ClO_4^-		2	99.4	8	12.33	143.2649653
Hexavalent Chromium, Cr[VI]			52.0	3	17.20	
User added						
User added						
User added						

Table H-2
Carbon Demand Calculation
RSA-204
Southeast (Area 1)
Redstone Arsenal, Madison County, Alabama

Sorbed Phase Electron Donor Demand

The concentration of the sorbed contaminant can be estimated by: $C_{SOIL} = K_{OC} \times f_{oc} \times C_{WATER}$

Where: K_{oc} is partition coefficient with respect to organic carbon.
f_{oc} (fraction organic carbon) is the mass of organic matter in soil divided by the total mass of soil
C_{WATER} is the concentration of the contaminant in the groundwater

Default values for K_{oc} taken from: www.epa.gov/superfund/resources/soil/appd_k.pdf

Inputs Adjust *Koc* as necessary to provide site specific estimates or enter sediment concentration (C_{SOIL})	K_{oc} (L/kg)	C_{SOIL} (mg/Kg)	Mass (g)	Hydrogen Demand ($g\ H_2$)
Tetrachloroethene (PCE), C_2Cl_4	272			
Trichloroethene (TCE), C_2HCl_3	97			
cis-1,2-dichloroethene (c-DCE), $C_2H_2Cl_2$	38			
Vinyl Chloride (VC), C_2H_3Cl	241			
Carbon tetrachloride, CCl_4	158			
Chloroform, $CHCl_3$	53			
sym- tetrachloroethane, $C_2H_2Cl_4$	79			
1,1,1-Trichloroethane (TCA), CH_3CCl_3	139			
1,1-Dichloroethane (DCA), CH_2CHCl_2	54			
User added				
User added				
User added				

Section F: Additional Hydrogen Demand and Carbon Losses

Generation (Potential Amount Formed)	Typical Value	GW Conc. (mg/L)	MW (g/mole)	e^- equiv./ mole	Stoichiometry *Contaminant / H_2 (wt/wt H_2)*	Hydrogen Demand ($g\ H_2$)	DOC Released *(moles)*
Estimated Amount of $Fe2^+$ Formed	10 to 100	100	55.8	1	55.41	1594.22198	
Estimated Amount of Manganese (Mn^{2+}) Formed		5	54.9	2	27.25	162.0541819	
Estimated Amount of CH_4 Formed	5 to 20	20	16.0	8	1.99	8879.291532	
Target Amount of DOC to Release	60 to 100	100	12.0				7354.22

Calculations assume:
1.) all reactions go to completion during passage through emulsified edible oil treated zone; and,
2.) perfect reaction stoichiometry.

EOS® Requirement Calculations Based on Hydrogen Demand and Carbon Losses

Stoichiometric Hydrogen Demand	27	pounds
DOC Released	558	pounds

EOS® Requirement Based on Hydrogen Demand and Carbon Loss

3 drums

Step 3: EOS® Requirement Based on Attachment by Aquifer Material

Soil Characteristics

Effective treatment thickness, "z_e" (typically less than 40%)

For Additional Information on Effective Thickness, Click Here

Weight of sediment to be treated: lbs

Adsorptive Capacity of Soil (accept default or enter site specific value): 0.0052 lbs EOS® / lbs sediment

EOS® Attachment by Aquifer Material[1]

- Fine sand with some clay 0.001 to 0.002 lbs EOS® / lbs soil
- Sand with higher silt/clay content 0.002 to 0.004 lbs EOS® / lbs soil

[1]Default values provided based on laboratory studies completed by NCSU

For Additional Data, Click Here

EOS® Requirement Based on Oil Entrapment by Aquifer Material

drums

Summary – How much EOS® do you need?

Suggested Quantity of EOS® for Your Project: 3 drums

Copyright © 2002 - 2007 EOS Remediation, Inc.
All Rights Reserved

†Exclusive license agreement with Solutions-IES under U.S. Patent # 6,398,960 and several international patents pending.
††EOS® is a registered trademark of EOS Remediation, Inc.

Table H-3
Carbon Demand Calculation
North (Area 2)
RSA-204, Redstone Arsenal, Madison County, Alabama

EOS Remediation, Inc.

EOS® SOURCE AREA & DNAPL DESIGN WORKSHEET

Version 2.1 Rev. Date: March 7, 2007
www.EOSRemediation.com

Help

Site Name:	RSA-204
Location:	North - Area 2
Project No.:	

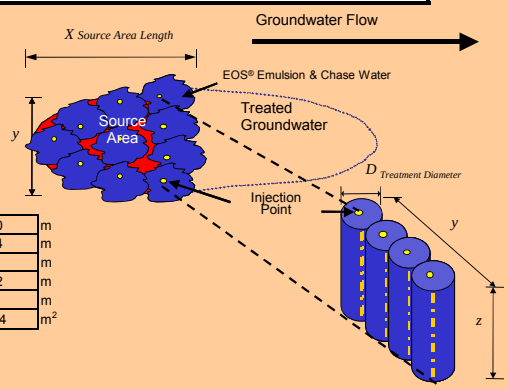

Step 1: Select a Substrate from the EOS® Family of Bioremediation Products

Substrate Selected (pick from drop down list): EOS 450
For Product Literature Click Here

Step 2: EOS® Consumption During Contaminant Biodegradation / Biotransformation

Section A: Source Area Dimensions

Length of treatment area parallel to groundwater flow, "x"	105	ft	32.0	m
Width of treatment area perpendicular to groundwater flow, "y"	90	ft	27.4	m
Minimum depth to contamination	14	ft	4.3	m
Maximum depth of contamination	40	ft	12.2	m
Treatment thickness, "z"	26	ft	7.9	m
Treatment zone cross-sectional area, A = y * z	2,340	ft^2	217.4	m^2

Section B: Groundwater Flow Rate / Site Data

Soil Characteristics

Nominal Soil Type (pick from drop down list)	Clay			
Total Porosity (accept default or enter n)	0.47	(decimal)		
Effective Porosity (accept default or enter n_e)	0.00	(decimal)		
Soil bulk density; (1-n)*2.65 g/cc (accept calculated or enter dry bulk density)	1.40	g/cc	88	lbs / ft^3
Fraction of organic carbon: foc	0.0100	range: 0.0001 to 0.01		

Hydraulic Characteristics

Hydraulic Conductivity (accept default or enter K)	0.15	ft/day	5.3E-05	cm/sec
Hydraulic Gradient (accept default or enter i)	0.001	ft/ft		

Note: Since the hydraulic gradient ($i = dh/dx$) is negative, we ask you to enter $-i$ in the EOS® Design Tool so that you can enter a positive number for convenience.

Non-reactive Transport Velocity, $V_x = -(K \times i) / n_e$	0.10	ft/day	0.030	m/day
Groundwater flow rate through treatment zone, $Q = -KiA$	2.63	gallons/day	9.94	L/day

Section C: Calculated Contact Length

Contact time (τ) between oil and contaminants (accept default or enter τ)	90	typical values 60 to 180 days, see comment
Calculated Contact Length (x) = $\tau * V_x$	9.0	ft

Treatment zone volume	245,700	ft^3	6,957	m^2
Treatment zone groundwater volume (volume * porosity)	863,783	gallons	3,270,001	L

Section D: Design Lifespan For One Application

	3	year(s)	typical values 5 to 10 years	
Estimated total groundwater volume treated over design life	866,658	gallons	3,280,885	L

Section E: Electron Acceptors

Dissolved Phase Electron Donor Demand

Inputs	Typical Value	GW Conc. (mg/L)	MW (g/mole)	e^- equiv./ mole	Stoichmetry *Contaminant/H 2 (wt/wt H_2)*	Hydrogen Demand (g H_2)
Dissolved Oxygen (DO)	0 to 8	4	32.0	4	7.94	1653.463782
Nitrate Nitrogen (NO_3^- - N)	1 to 10	5	62.0	5	12.30	1333.283157
Sulfate (SO_4^{2-})	10 to 500	10	96.1	8	11.91	2754.017218
Tetrachloroethene (PCE), C_2Cl_4			165.8	8	20.57	
Trichloroethene (TCE), C_2HCl_3			131.4	6	21.73	
cis-1,2-dichloroethene (c-DCE), $C_2H_2Cl_2$			96.9	4	24.05	
Vinyl Chloride (VC), C_2H_3Cl			62.5	2	31.00	
Carbon tetrachloride, CCl_4			153.8	8	19.08	
Chloroform, $CHCl_3$			119.4	6	19.74	
sym- tetrachloroethane, $C_2H_2Cl_4$			167.8	8	20.82	
1,1,1-Trichloroethane (TCA), CH_3CCl_3			133.4	6	22.06	
1,1-Dichloroethane (DCA), CH_2CHCl_2			99.0	4	24.55	
Chloroethane, C_2H_5Cl			64.9	2	32.18	
Perchlorate, ClO_4^-		2	99.4	8	12.33	532.1270139
Hexavalent Chromium, Cr[VI]			52.0	3	17.20	
User added						
User added						
User added						

Table H-3
Carbon Demand Calculation
North (Area 2)
RSA-204, Redstone Arsenal, Madison County, Alabama

Sorbed Phase Electron Donor Demand

The concentration of the sorbed contaminant can be estimated by: $C_{SOIL} = K_{OC} \times f_{oc} \times C_{WATER}$

Where: K_{oc} is partition coefficient with respect to organic carbon.
f_{oc} (fraction organic carbon) is the mass of organic matter in soil divided by the total mass of soil
C_{WATER} is the concentration of the contaminant in the groundwater

Default values for K_{oc} taken from: www.epa.gov/superfund/resources/soil/appd_k.pdf

Inputs Adjust *Koc* as necessary to provide site specific estimates or enter sediment concentration (C_{SOIL})	K_{oc} (L/kg)	C_{SOIL} (mg/Kg)	Mass (g)	Hydrogen Demand ($g\ H_2$)
Tetrachloroethene (PCE), C_2Cl_4	272			
Trichloroethene (TCE), C_2HCl_3	97			
cis-1,2-dichloroethene (c-DCE), $C_2H_2Cl_2$	38			
Vinyl Chloride (VC), C_2H_3Cl	241			
Carbon tetrachloride, CCl_4	158			
Chloroform, $CHCl_3$	53			
sym- tetrachloroethane, $C_2H_2Cl_4$	79			
1,1,1-Trichloroethane (TCA), CH_3CCl_3	139			
1,1-Dichloroethane (DCA), CH_2CHCl_2	54			
User added				
User added				
User added				

Section F: Additional Hydrogen Demand and Carbon Losses

Generation (Potential Amount Formed)	Typical Value	GW Conc. (mg/L)	MW (g/mole)	e^- equiv./ mole	Stoichiometry *Contaminant / H_2 (wt/wt H_2)*	Hydrogen Demand ($g\ H_2$)	DOC Released *(moles)*
Estimated Amount of $Fe2^+$ Formed	10 to 100	100	55.8	1	55.41	5921.395925	
Estimated Amount of Manganese (Mn^{2+}) Formed		5	54.9	2	27.25	601.9155328	
Estimated Amount of CH_4 Formed	5 to 20	20	16.0	8	1.99	32980.22569	
Target Amount of DOC to Release	60 to 100	100	12.0				27315.67

Calculations assume:
1.) all reactions go to completion during passage through emulsified edible oil treated zone; and,
2.) perfect reaction stoichiometry.

EOS® Requirement Calculations Based on Hydrogen Demand and Carbon Losses

Stoichiometric Hydrogen Demand	101	pounds
DOC Released	2,072	pounds

EOS® Requirement Based on Hydrogen Demand and Carbon Loss

8 drums

Step 3: EOS® Requirement Based on Attachment by Aquifer Material

Soil Characteristics

Effective treatment thickness, "z_e" (typically less than 40%)

For Additional Information on Effective Thickness, Click Here

Weight of sediment to be treated — lbs

Adsorptive Capacity of Soil (accept default or enter site specific value) — 0.0052 lbs EOS® / lbs sediment

EOS® Attachment by Aquifer Material[1]

- Fine sand with some clay 0.001 to 0.002 lbs EOS® / lbs soil
- Sand with higher silt/clay content 0.002 to 0.004 lbs EOS® / lbs soil

[1]Default values provided based on laboratory studies completed by NCSU

For Additional Data, Click Here

EOS® Requirement Based on Oil Entrapment by Aquifer Material

drums

Summary – How much EOS® do you need?

Suggested Quantity of EOS® for Your Project 8 drums

Copyright © 2002 - 2007 EOS Remediation, Inc.
All Rights Reserved

†Exclusive license agreement with Solutions-IES under U.S. Patent # 6,398,960 and several international patents pending.
††EOS® is a registered trademark of EOS Remediation, Inc.

APPENDIX I

UNDERGROUND INJECTION CONTROL PERMIT

Class V Underground Injection Control Permit Application for Enhanced Biodegradation of Perchlorate in Groundwater
RSA-204, Oxidizer Facility, Building 7691
U.S. Army Garrison-Redstone
Madison County, Alabama

Prepared for:

Mission & Installation Contracting Command
ATTN: MICC Center - FSH
2107 17th Street
Building 4197, Suite 15
Fort Sam Houston, Texas 78234-5015

Prepared by:

CB&I Federal Services LLC
2410 Cherahala Boulevard
Knoxville, Tennessee 37932

Contract Number DACA21-96-D-0018
CB&I Project Number 147104
Task Order 0008

September 2016

Class V Underground Injection Control Permit Application for Enhanced Biodegradation of Perchlorate in Groundwater RSA-204, Oxidizer Facility, Building 7691 U.S. Army Garrison-Redstone Madison County, Alabama

Certification

I certify under penalty of law that this document and all attachments were prepared under my direction or supervision in accordance with a system designed to assure that qualified personnel properly gather and evaluate the infom1ation submitted. Based on my inquiry of the person or persons who manage the system, or those persons directly responsible for gathering the information, the information submitted is, to the best of my knowledge and belief, true, accurate, and complete. I am aware that there are significant penalties for submitting false information, including the possibility of fine and imprisonment for knowing violations.

Mark L. Shoemaker, Alabama PG No. 1001

Date 9/23/16

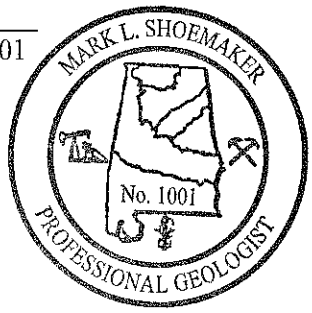

Table of Contents

1.0 General Information for Class V Underground Injection Control Permit

List of Tables

Table 1 Proposed Injection Location Summary

List of Figures

Figure I-1 RSA-204 Site Location Map
Figure I-2 RSA-204 Site Topography
Figure I-3 RSA-204 Proposed Groundwater ISEB Treatment
Figure I-4 RSA-204 Top of Bedrock Elevation and Shallow Potentiometric Surface (April 2016)

Attachments

Attachment 1 Material Safety Data Sheets
Attachment 2 Form 531
Attachment 3 Boring Logs

1.0 General Information for Class V Underground Injection Control Permit

A. Facility

Applicant: U.S. Army Garrison-Redstone, Environmental Management Division
Owner: U.S. Army Garrison-Redstone
Address: 4488 Martin Road, Redstone Arsenal, Alabama 35898-5000
Phone: 256-955-6967
Responsible Official: Terry W. Hazle
Contact Person: Barry Hodges
Phone: 256-876-6492

B. Facility Name

Facility Name: RSA-204, Oxidizer Facility, Building 7691, Redstone Arsenal, Alabama.

Address: U.S. Army Garrison-Redstone.

Location: RSA-204 is located in the northwestern portion of the RSA-146 groundwater unit at the intersection of Eagle and Magazine Roads (Figure I-1) and includes five buildings (Buildings 7687 through 7691) (Figure I-2).

Injection Well Description: Direct-push technology (DPT) direct injection (Table 1).

C. Location

Injection Locations: See Figure I-3, Proposed Groundwater ISEB Treatment Layout.

Public and Private Water Supply Wells: None within 0.5-mile radius.

Source Area Assessment Areas: None.

Well Head Protection Areas: None.

Surface Waters and Pertinent Surface Features: See Figures I-1 and I-2. No surface water or wetland areas are present in the immediate vicinity of the injections. Shallow roadside drainage ditches are along Eagle and Falcon Roads northeast of the injection areas. A shallow drainage ditch exits the site from the southeast.

Topography: See Figure I-2. There are three earthen blast berms on the site, each approximately 16 feet high. Otherwise, surface topography slopes to the west along Magazine Road and is approximately 592 feet above mean sea level (amsl) to 572 feet amsl northeast near the intersection Eagle and Faclon Roads. The central parts of the site are mostly flat. The

elevation at the southern treatment area is approximately 582 feet amsl, and approximately 578 feet amsl at the northern treatment area.

D. Test Description

The U.S. Army Garrison-Redstone will conduct groundwater treatment (in situ enhanced bioremediation [ISEB]) that stimulates anaerobic microbial degradation of the groundwater contaminant perchlorate. Additionally, the anaerobic conditions produced by the EVO and nutrient additions should promote reductive dechlorination of the small downgradient trichloroethene plume. Direct injection of emulsified vegetable oil (EVO) and nutrients into the shallow (overburden) aquifer will produce anaerobic conditions. Injection will be performed using DPT. Commercially available EVO emulsions are designed to be initially transported through the pore spaces and eventually adhering to the aquifer matrix, providing a carbon source that will stay active for 3 to 5 years, depending on the amount of substrate injected and site conditions. As the EVO degrades the fermentation products will travel with groundwater flow, thereby extending the area of bioremediation treatment beyond the identified source areas.

There are two separate treatment areas within the RSA-204 site, a northern treatment area and a southern treatment area. Perchlorate groundwater concentrations from the southern treatment area were reported at a maximum of 98,300 µg/L in 2014, and in the northern treatment area at 42,800 µg/L.

A baseline groundwater sampling event will be performed prior to implementation of the ISEB to establish pre-treatment contaminant concentrations in groundwater. The baseline monitoring event will be used to confirm the assumptions used for determining ISEB treatment (e.g., recommended dosage). Data will also be used with subsequent data collected for future trend analysis and to determine the progress of the ISEB groundwater treatment.

Prior to the start of the corrective measures as part of design optimization, 21 well-point locations (and up to 10 stepout contingency locations) will be placed around the outside of the 10,000 µg/L plume locations. The proposed locations on Figure I-3 contain a “204INJPZ” prefix as part of their location codes; 12 well points are planned for the northern area and nine are planned for the southern area. These well points will serve a dual purpose being used both during design optimization to refine the plume contours and during groundwater treatment to inject amendments at the perimeter of the source areas.

E. Design

Water will be transferred into a reagent mixing tank stationed adjacent to the injection pump for the preparation of the EVO solution. Determining an appropriate dosage for the various reagents is a function of the expected reagent distribution radius; thickness of the target horizon; soil type; groundwater velocity; effective pore space volume; the electron acceptor demand for the

dissolved and sorbed phase perchlorate, trichloroethene, and explosive compounds; and the quantity of competing electron acceptors (e.g., oxygen, nitrate, sulfate, iron, manganese) in the dissolved phase.

Diammonium phosphate (DAP) and yeast extract will be added as microbial nutrients to make up the EVO solution. The DAP will be added according to a 100:10:1 carbon:nitrogen:phosphorus ratio in relation to the amount of EVO needed. The yeast extract or equivalent will be added at a 10 percent ratio by weight to the DAP amendment. Approximately 0.2 pounds of DAP and 0.02 pounds of yeast extract will be added per pound of carbon in the EVO raw material.

For the northern treatment area, 12 injection well points and 21 DPT locations are planned based upon a 15-foot radius of influence. Approximately 2,500 gallons of EVO solution will utilized, consisting of approximately 3,500 pounds of EVO, 585 pounds of DAP, and 60 pounds of yeast extract or the equivalent. In the southern treatment area, 16 DPT locations are planned along with nine injection well points. Approximately 700 gallons of EVO solution will be used, consisting of approximately 1,300 pounds of EVO, 220 pounds of DAP, and 20 pounds of yeast extract or the equivalent. A follow up round of DPT injections is planned for 20 percent of the injection locations and intervals following the same EVO solution concentrations.

A high pressure/flow rate delivery process was selected for the injections at RSA-204. The reagents will be direct-injected using a variable-speed positive displacement pump (piston type) capable of generating up to 1,000 pounds per square inch of pressure at a flow rate of up to 50 gallons per minute. High flow delivery is preferred over low flow delivery because it requires less mix water and generally reduces the potential for expansion of the plume. Conversely, low-flow injection essentially requires complete replacement of the aquifer pore volume. Under the high-flow rate scenario, it is anticipated that the injected materials will replace only 10 percent of the aquifer's effective pore space. The DPT injections will begin at the perimeter injection locations and then work into the center to reduce the potential for the injections to cause the plume to migrate. The injection borings will be backfilled by tremie grouting a neat cement/bentonite grout in accordance with RSA and ADEM requirements.

The DPT injections will use a pressure activated injection tip with a check valve to allow lateral delivery of the reagent and prevent backflow. The target flow rate for the injections is approximately 20 gallons per minute, which may be adjusted based on observations made during the injections. Injections will begin at approximately 20 pounds per square inch and increase until the flow rate reaches the target flow rate or the appropriate amount of reagent is injected. Injection pressures will be closely monitored during the injections.

A second round of DPT injections is planned as needed, approximately 1 year after the initial EVO solution injection to address any remaining hot spots within the treatment areas. Approximately 7 DPT locations for both source areas, or 20 percent of the 37 DPT injection locations, have been assumed in this second round of injections.

Performance monitoring will be initiated following completion of the first round of injections. Performance monitoring will be performed at the following frequency:

- Year 1; quarterly sampling of 26 wells (approximately 30 days, 120 days, 210 days and 300 days after reagent injections)
- Year 2; semi-annual sampling of 26 wells
- Year 3; semi-annual sampling of 26 wells.

Additional monitoring will be completed past Year 3; however, exact number of wells, locations, and frequency may change based on the first three years of data. The ISEB performance monitoring analytical program will consistent of VOCs, perchlorate, explosives, dissolved gases (methane, ethane, ethane, and acetylene), total and dissolved metals (manganese, arsenic, chromium, and iron), anions (nitrate and sulfate), iron II, total organic carbon, and alkalinity. Total organic carbon will provide an indicator of the remaining EVO (i.e., organic carbon) available for a microbial food source that is remaining in the aquifer.

MSDS for EVO and diammonium phosphate are included in the Attachments.

F. Hydrological Data

Groundwater beneath RSA-204 occurs in the unconsolidated overburden and in the upper portion of the carbonate bedrock. The overburden and upper bedrock comprise a single interconnected aquifer. At depth, groundwater occurs under semi-confined conditions, flowing along discrete joints and bedding-plane partings. The water table across RSA-204 and the larger RSA-146 groundwater unit is generally flat, mimicking local topography. Figure I-4 shows groundwater flow based on the groundwater elevation measured in April 2016. Groundwater flow direction is radial at RSA-204. Average depth to groundwater in overburden and interface wells in proximity to RSA-204 fluctuates seasonally, ranging from approximately 6.5 to 23 feet below ground surface (bgs) with a seasonal average depth of approximately 16 feet bgs. The groundwater elevations in overburden and interface monitoring wells ranged from 559.4 to 575.5 ft amsl. Four shallow bedrock wells were installed in summer of 2014 (204-RS2668, 204-RS2669, 204-RS2670, and 204-RS2671). Depth to water in these bedrock wells (measured in December 2014) ranged from 14.32 to 18.73 ft bgs. The groundwater elevations in bedrock monitoring wells ranged from 562.20 to 563.46 ft amsl.

Form 531 is included in Attachment 2. Boring logs for all existing wells are provided in Attachment 3 to this application.

G. Financial Responsibility

The federal government is the owner/operator of this facility.

H. Certification:

I certify under penalty if law that I have personally examined and am familiar with the information submitted in this application and all attachments and that, based on my inquiry of those persons immediately responsible for obtaining the information contained in the application, I believe that the information is true, accurate, and complete. I am aware that there are significant penalties for submitting false information, including the possibility of fine and imprisonment.

Signed,

Terry W. Hazle
Chief, Environmental Management Division

TABLE

Table 1

Injection Well Consrtuction Summary
RSA-204
Redstone Arsenal, Madison County, Alabama

Proposed					Estimated		
Area	Northing	Easting	Latitude	Longitude	Top of Injection Point Elevation (Estimated) [2] (ft amsl)	Borehole Total Depth [3] (ft bgs)	DTW (ft BTOC)
Injection Area 1 (South)[1]							
204INJPZ-13	1500213.48	422444.53	34.62103490	-86.61016264	582	30	16
204INJPZ-14	1500238.73	422463.46	34.62110467	-86.61010035	582	30	16
204INJPZ-15	1500233.87	422497.94	34.62109206	-86.60998565	582	30	16
204INJPZ-16	1500202.80	422513.47	34.62100701	-86.60993322	582	30	16
204INJPZ-17	1500179.49	422456.18	34.62094177	-86.61012304	582	30	16
204INJPZ-18	1500172.21	422529.98	34.62092332	-86.60987757	582	30	16
204INJPZ-19	1500123.65	422492.11	34.62078911	-86.61000219	582	30	16
204INJPZ-20	1500111.51	422514.44	34.62075624	-86.60992765	582	30	16
204INJPZ-21	1500128.51	422537.27	34.62080341	-86.60985224	582	30	16
204INJ-01	1500220.28	422461.52	34.62105394	-86.61010633	582	30	16
201INJ-02	1500227.07	422480.46	34.62107301	-86.61004357	582	30	16
204INJ-03	1500216.39	422496.97	34.62104402	-86.60998843	582	30	16
204INJ-04	1500197.46	422496.97	34.62099199	-86.60998795	582	30	16
204INJ-05	1500208.62	422479.00	34.62102229	-86.61004794	582	30	16
204INJ-06	1500187.26	422474.14	34.62096349	-86.61006353	582	30	16
204INJ-07	1500164.44	422469.77	34.62090070	-86.61007747	582	30	16
204INJ-08	1500179.01	422492.60	34.62094120	-86.61000200	582	30	16
204INJ-09	1500181.43	422512.02	34.62094828	-86.60993751	582	30	16
204INJ-10	1500160.55	422511.05	34.62089090	-86.60994020	582	30	16
204INJ-11	1500159.10	422492.11	34.62088650	-86.61000310	582	30	16
204INJ-12	1500140.16	422480.46	34.62083423	-86.61004135	582	30	16
204INJ-13	1500144.05	422496.97	34.62084525	-86.60998658	582	30	16
204INJ-14	1500128.02	422509.59	34.62080149	-86.60994421	582	30	16
204INJ-15	1500145.02	422522.21	34.62084845	-86.60990269	582	30	16
204INJ-16	1500200.37	422458.61	34.62099918	-86.61011550	582	30	16

Table 1

Injection Well Consrtuction Summary
RSA-204
Redstone Arsenal, Madison County, Alabama

Area	Northing	Easting	Latitude	Longitude	Top of Injection Point Elevation (Estimated) [2] (ft amsl)	Borehole Total Depth [3] (ft bgs)	DTW (ft BTOC)
Injection Area 2 (North)[1]							
204INJPZ-01	1500592.02	422350.58	34.62207294	-86.61048457	578	30	16
204INJPZ-02	1500585.06	422383.34	34.62205451	-86.61037551	578	30	16
204INJPZ-03	1500582.20	422421.83	34.62204745	-86.61024750	578	30	16
204INJPZ-04	1500551.07	422446.40	34.62196246	-86.61016505	578	30	16
204INJPZ-05	1500513.40	422455.00	34.62185914	-86.61013550	578	30	16
204INJPZ-06	1500551.48	422338.29	34.62196130	-86.61052436	578	30	16
204INJPZ-07	1500471.63	422330.92	34.62174175	-86.61054681	578	30	16
204INJPZ-08	1500511.76	422333.79	34.62185207	-86.61053831	578	30	16
204INJPZ-09	1500484.73	422438.62	34.62178004	-86.61018921	578	30	16
204INJPZ-10	1500457.30	422409.14	34.62170403	-86.61028650	578	30	16
204INJPZ-11	1500434.77	422379.65	34.62164153	-86.61038391	578	30	16
204INJPZ-12	1500431.91	422326.83	34.62163253	-86.61055940	578	30	16
204INJ-17	1500457.71	422368.19	34.62170429	-86.61042260	578	30	16
204INJ-18	1500471.22	422383.34	34.62174174	-86.61037259	578	30	16
204INJ-19	1500483.51	422405.45	34.62177596	-86.61029942	578	30	16
204INJ-20	1500488.01	422380.88	34.62178782	-86.61038119	578	30	16
204INJ-21	1500481.87	422359.18	34.62177048	-86.61045316	578	30	16
204INJ-22	1500499.89	422362.86	34.62182006	-86.61044138	578	30	16
204INJ-23	1500529.37	422350.17	34.62190080	-86.61048432	578	30	16
204INJ-24	1500532.65	422373.51	34.62191029	-86.61040683	578	30	16
204INJ-25	1500512.99	422382.11	34.62185647	-86.61037775	578	30	16
204INJ-26	1500503.98	422403.40	34.62183217	-86.61030675	578	30	16
204INJ-27	1500496.61	422421.01	34.62181229	-86.61024803	578	30	16
204INJ-28	1500519.13	422416.51	34.62187408	-86.61026358	578	30	16
204INJ-29	1500526.50	422398.08	34.62189394	-86.61032501	578	30	16
204INJ-30	1500545.75	422387.43	34.62194659	-86.61036089	578	30	16
204INJ-31	1500553.12	422362.86	34.62196632	-86.61044274	578	30	16

Table 1

Injection Well Consrtuction Summary
RSA-204
Redstone Arsenal, Madison County, Alabama

Area	Northing	Easting	Latitude	Longitude	Top of Injection Point Elevation (Estimated) [2] (ft amsl)	Borehole Total Depth [3] (ft bgs)	DTW (ft BTOC)
204INJ-32	1500575.64	422363.27	34.62202821	-86.61044196	578	30	16
204INJ-33	1500569.50	422378.83	34.62201166	-86.61039008	578	30	16
204INJ-34	1500562.13	422396.03	34.62199177	-86.61033273	578	30	16
204INJ-35	1500549.84	422409.95	34.62195832	-86.61028614	578	30	16
204INJ-36	1500537.15	422420.19	34.62192366	-86.61025179	578	30	16
204INJ-37	1500525.27	422439.85	34.62189144	-86.61018616	578	30	16

[1] Wells shown on Figure I-3.
[2] Ground surface elevations are estimated based on the current topography at the site; all injection points will be installed before excavation, backfilling, and re-grading.
[3] Estimated depth is based on depth to the top of bedrock
Note: Injection piezometers 204INJPZ-01 through 204INJPZ-12 (Northern Injection Area) will be paired, nested piezometers (shallow/deep).
Northing and Easting in state plane coordinates - NAD 1983 State Plane Alabama East (Feet)
Latitude and Longitude - Geographic Coordinate System North American 1983; Datum - NAD 1983
amsl - Above mean sea level.
bgs - Below ground surface.
ft - Foot (feet).
BTOC - Below top of casing.
DTW - Depth to water.

FIGURES

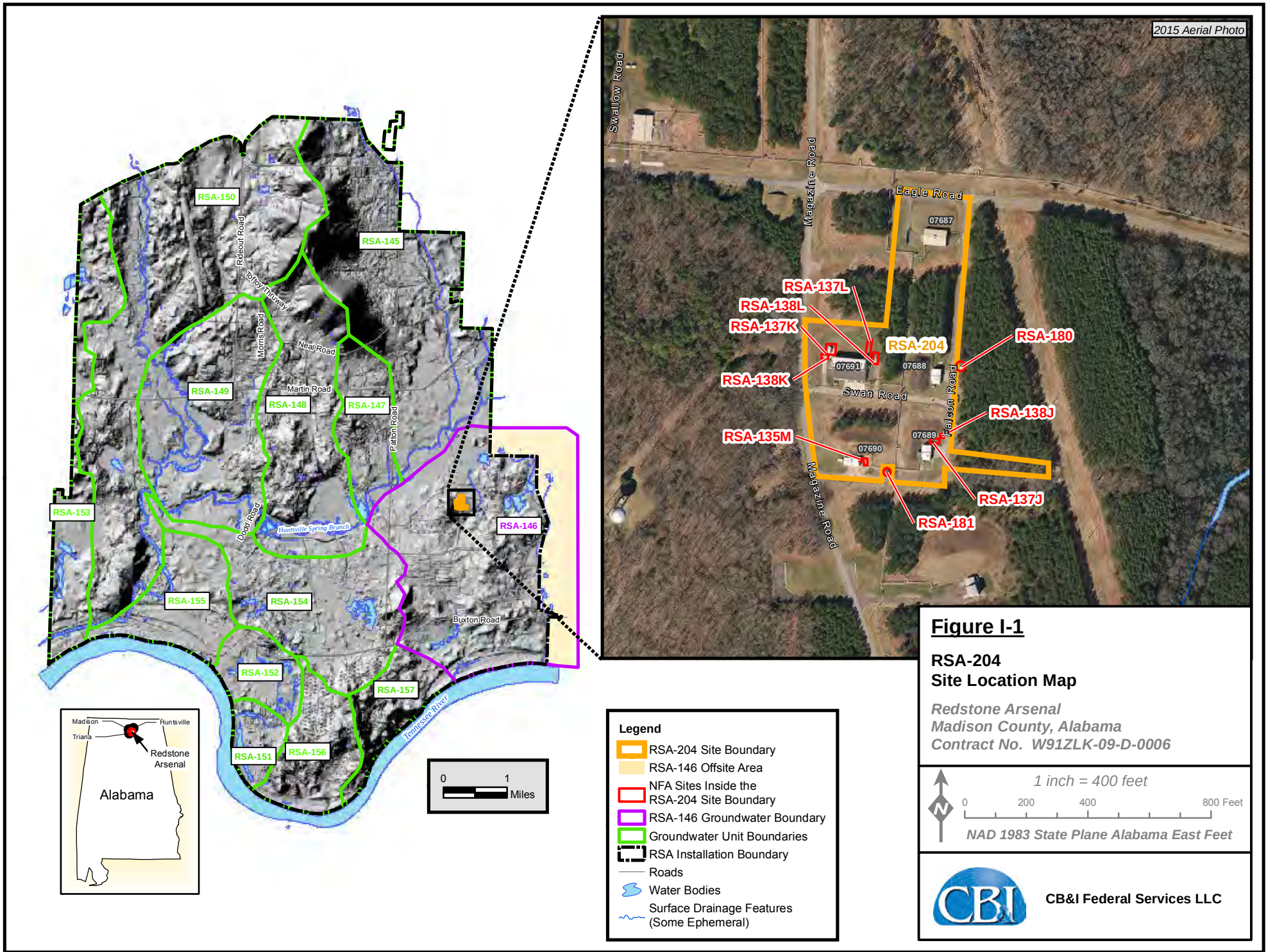

H:\Redstone\GIS_Documents\Project_maps\RSA_204\RSA_204_CMIP_May2016\RSA_204_Site_Location_map_Appl.mxd

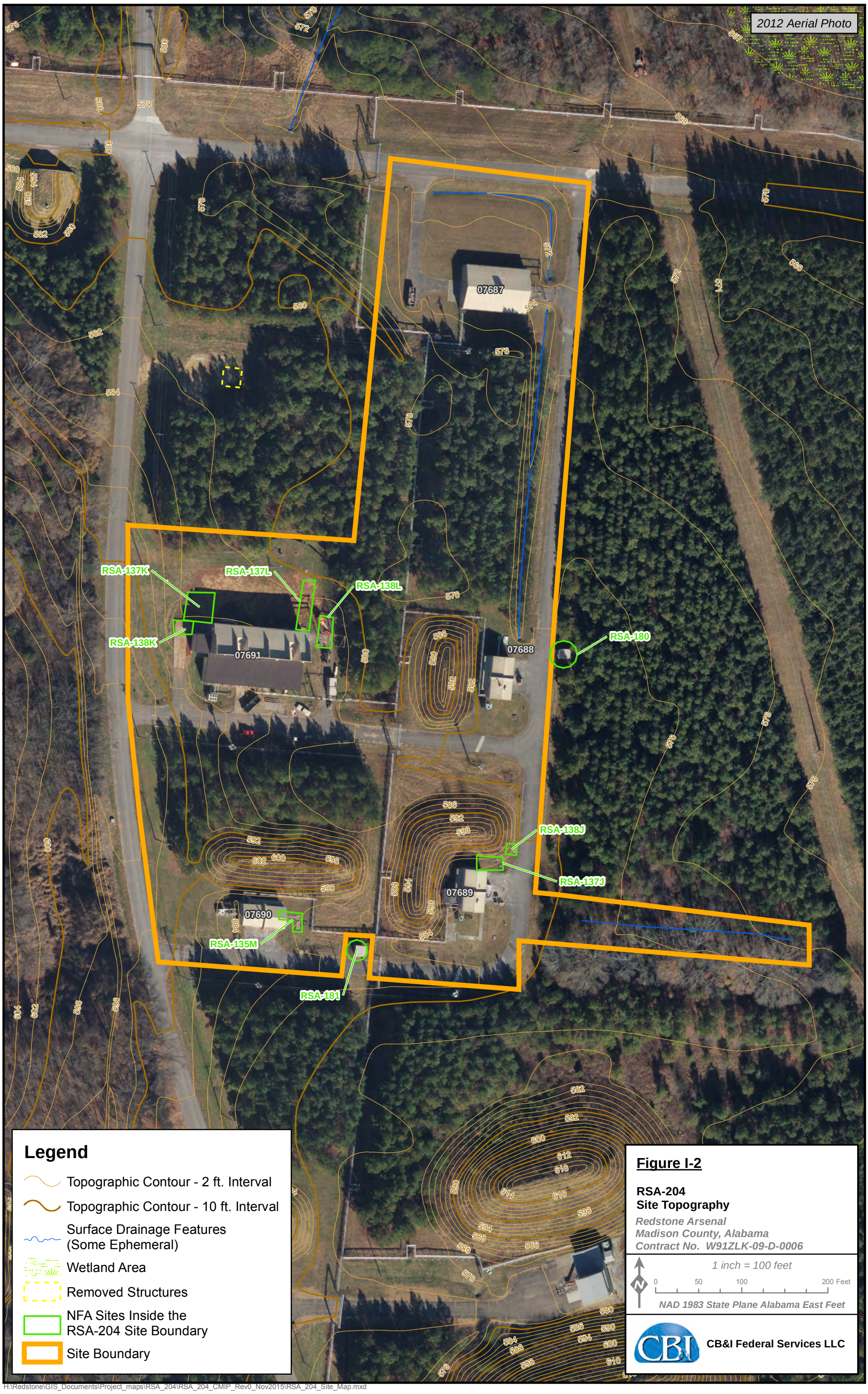

H:\Redstone\GIS_Documents\Project_maps\RSA_204\RSA_204_CMIP_Rev0_Nov2015\RSA_204_Site_Map.mxd

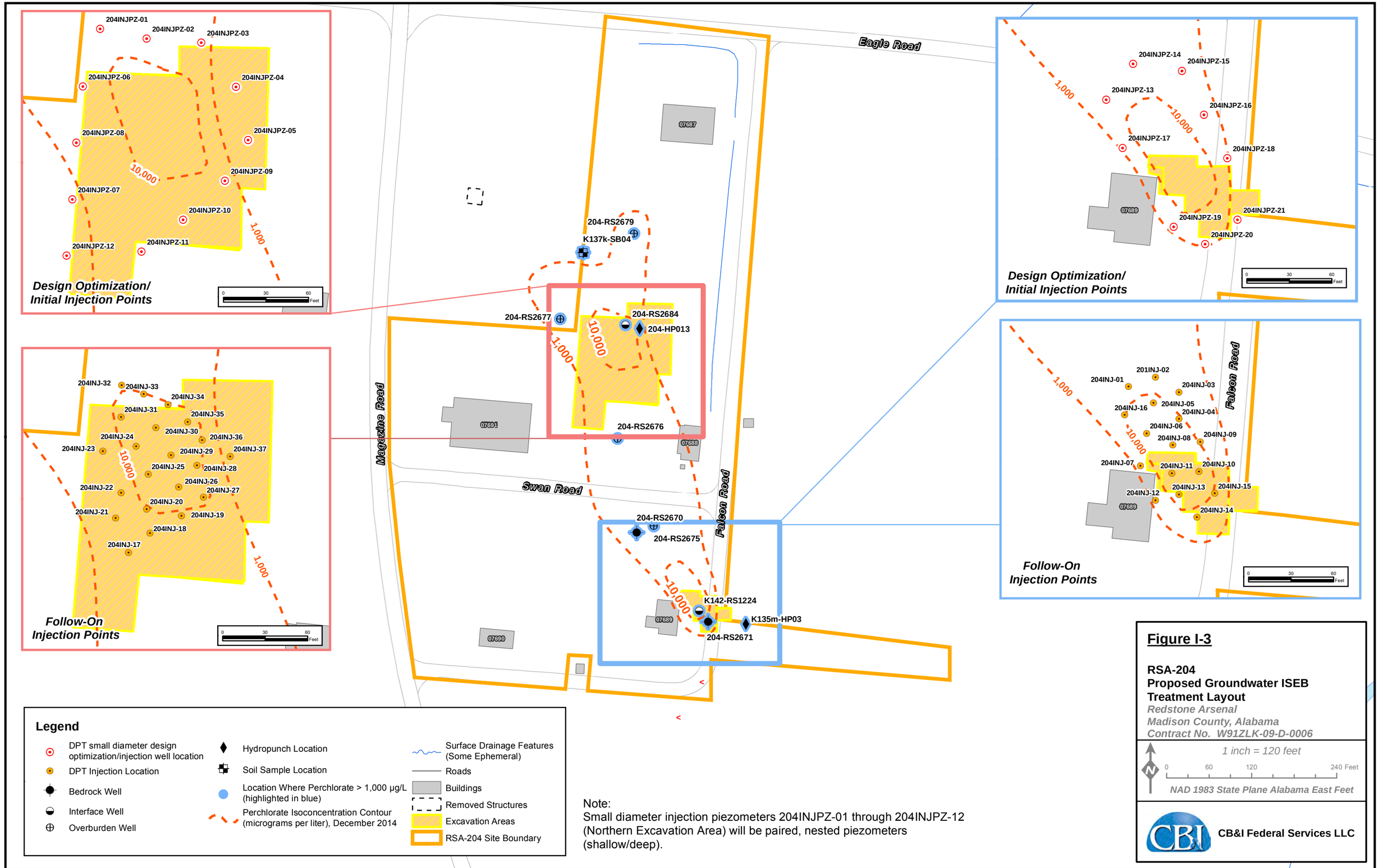

H:\Redstone\GIS_Documents\Project_maps\RSA_204\RSA_204_CMIP_Rev0_Nov2015\RSA_204_Prop_GWTR_ISEB_Treatment_Layout_Map_Rev2.mxd

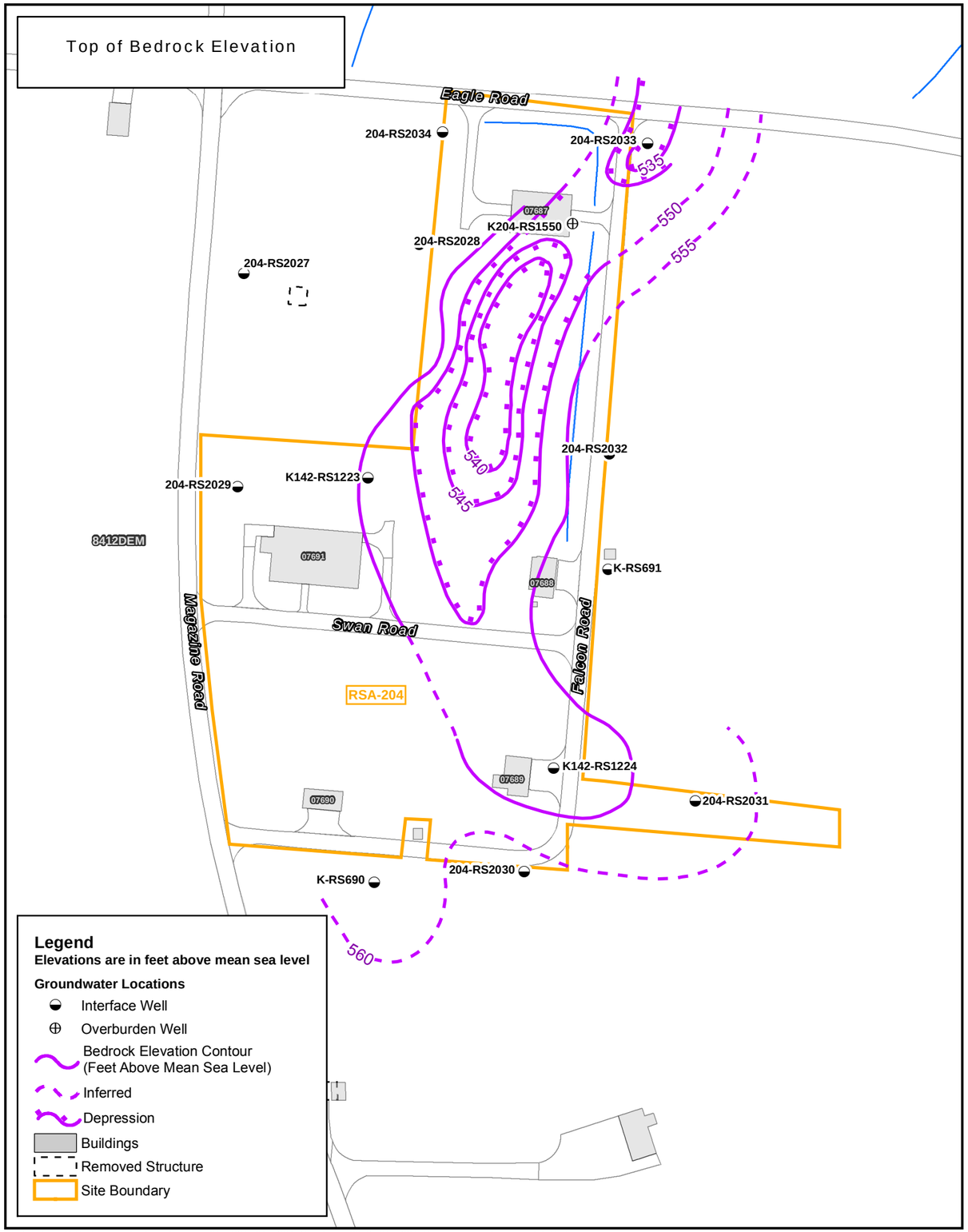

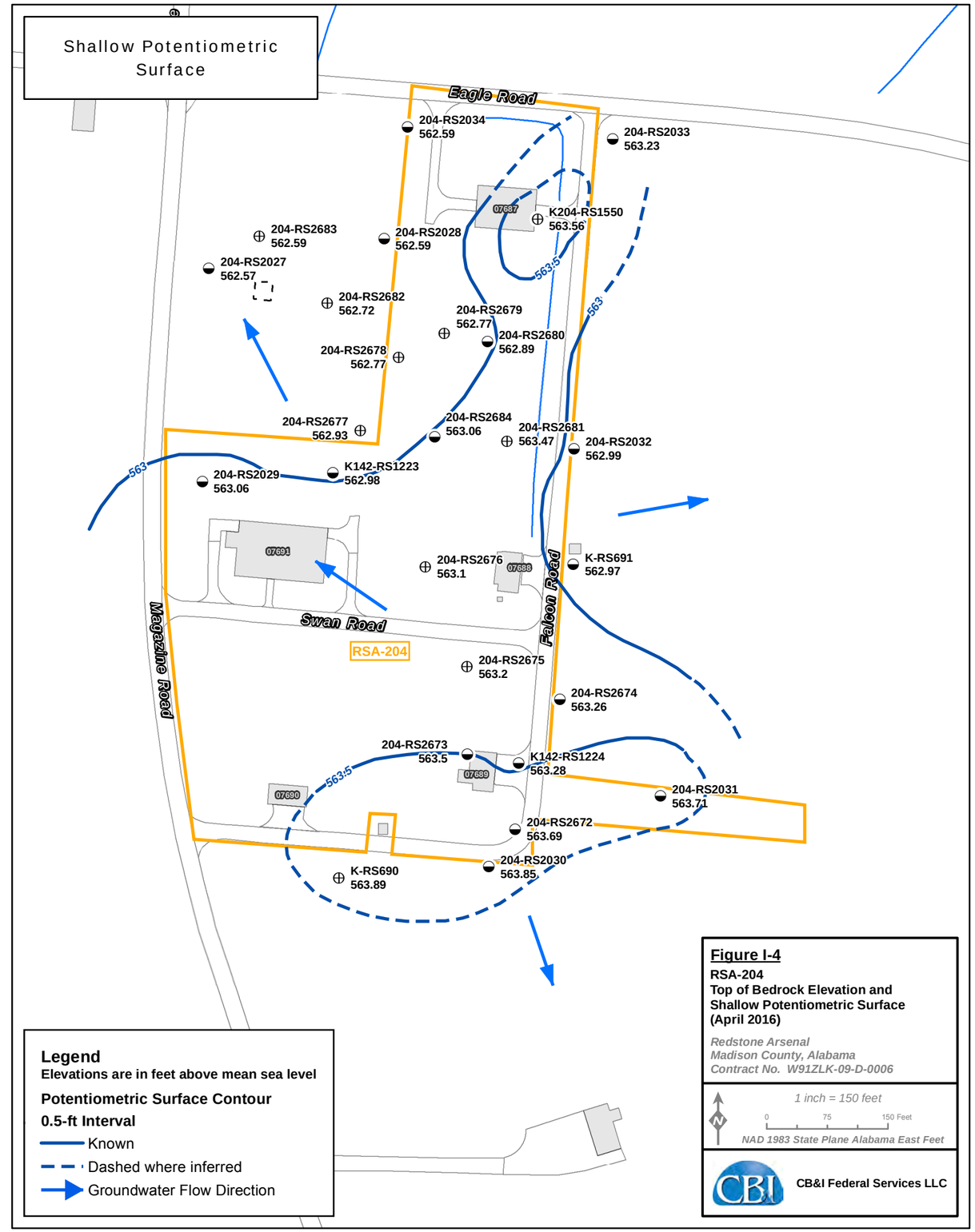

Figure I-4
RSA-204
Top of Bedrock Elevation and Shallow Potentiometric Surface (April 2016)

Redstone Arsenal
Madison County, Alabama
Contract No. W91ZLK-09-D-0006

1 inch = 150 feet
0 75 150 Feet
NAD 1983 State Plane Alabama East Feet

CB&I Federal Services LLC

H:\Redstone\GIS_Documents\Project_maps\RSA_204\RSA_204_CMIP_May2016\RSA_204_Shallow_and_Bedrock_Pot_Surfaces.mxd

ATTACHMENT 1

MATERIAL SAFETY DATA SHEETS

ATTACHMENT 1-A

EMULSIFIED VEGETABLE OIL MATERIAL SAFETY DATA SHEET

MATERIAL SAFETY DATA SHEET

EMULSIFIED EDIBLE OIL SUBSTRATE

D.O.T. HAZARD CLASSIFICATION: NONE

	----HMIS----
HEALTH	1
FLAMMABILITY	0
REACTIVITY	0
PERSONAL PROTECTION	B

MANUFACTURER'S NAME

EOS Remediation, Inc
1101 Nowell Road
Raleigh,NC 27607
www.EOSRemediation.com

DATE OF PREPARATION
01-24-03, Rev. 04·19-05

INFORMATION TELEPHONE NO.
919-873-2204

SECTION I - PRODUCT IDENTIFICATION

PRODUCT NAME	EOSOj)CONCENTRATE 598B 42
PRODUCT CLASS	VEGETABLE OIL BASED EMULSION
CAS NUMBER	MIXTURE

SECTION II • HAZARDOUS INGREDIENTS

COMPONENTfSI EXPOSURE LIMIT

THIS PRODUCT IS A MIXTURE OF EDIBLE FOOD GRADE ADDITIVES AND CONTAINS NO HAZARDOUS INGREDIENTS.

SECTION III - PHYSICAL DATA

BOILING POINT:	212°F
SPECIFIC GRAVITY:	0.97; .92 (pure oil phase)
VAPOR PRESSURE:	NOT ESTABLISHED
PE:RCENT VOLATILE BY VOLUME(%):	24 (AS WATER)
VAPOR DENSITY:	HEAVIER THAN AIR
EVAPORATION RATE:	NOT ESTABLISHED
SOLUBILITY IN WATER:	SOLUBLE
APPEARANCE AND ODOR:	OFF WHITE LIQUID WITH VEGETABLE OIL ODOR

EMULSIFIED EDIBLE OIL SUBSTRATE

SECTION IV - FIRE AND EXPLOSION HAZARD DATA

FLASH POINT:	>300°F
FLAMMABLE LIMITS:	NOT ESTABLISHED
EXTINGUISHING MEDIA:	C02, FOAM, DRY CHEMICAL NOTE: WATER, FOG, AND FOAM MAY CAUSE FROTHING AND SPATTERING.
UNUSUAL FIRE AND EXPLOSION HAZARDS:	BURNING WILL CAUSE OXIDES OF CARBON.
SPECIAL FIRE FIGHTING PROCEDUR S:	WEAR SELF CONTAINED BREATHING APPARATUS AND CHEMICAL RESISTANT CLOTHING. USE WATER SPRAY TO COOL FIRE EXPOSED CONTAINERS.

SECTION V - PHYSICAL HAZARDS

STABILITY:	STABLE
CONDITIONS TO AVOID:	NONE
INCOMPATIBILITY:	STRONG ACIDS AND OXIDIZERS.
HAZARDOUS DECOMPDSITION. PRODUCTS:	THERMAL DECOMPOSITION MAY PRODUCT OXIDES OF CARBON.
HAZARDOUS POLYMERIZATION:	WILL NOT OCCUR

SECTION VI - HEALTH HAZARDS

SIGNS AND SYMPTOMS OF EXPOSURE:

1. Acute Overexposure - NONE
2. Chronic Overexposure • NONE

MEDICAL CONDITIONS GENERALLY AGGRAVATED BY EXPOSURE: NONE KNOWN

CHEMICAL LISTED AS CARCINOGEN OR POTENTIAL CARCINOGEN:
N.T.P. • NO I.A.R.C.- NO OSHA· NO

EMERGENCY AND FIRST AID PROCEDURES:

1.) Inhalation-	REMOVE TO FRESH AIR.
2.) Eyes-	FLUSH WITH WATER FOR 15 MINUTES, IF IRRITATION PERSISTS SEE PHYSICIAN.
3.) Skin-	WASH WITH MILO SOAP AND WATER.
4.) Ingestion-	PRODUCT IS NON-TOXIC. IF NAUSEA OCCURS, INDUCE VOMITING AND SEEK MEDICAL ATTENTION.

EMULSIFIED EDIBLE OIL SUBSTRATE

SECTION VII - SPECIAL PROTECTION INFORMATION

RESPIRATORY PROTECTION:	NOT NORMALLY REQUIRED
VENTILATION:	LOCAL EXHAUST
PROTECTIVE GLOVES:	NOT NORMALLY REQUIRED
EYE PROTECTION:	NOT NORMALLY REQUIRED
OTHER PROTECTIVE CLOTHING OR EQUIPMENT:	NONE

-SECTION VIII • SPECIAL PRECAUTIONS AND SPILLJLEAK PROCEDURES

PRECAUTIONS TO BE TAKEN IN HANDLING AND STORAGE:	DO NOT STORE NEAR EXCESSIVE HEAT OR OXIDIZERS.
OTHER PRECAUTIONS:	NONE
STEPS TO BE TAKEN IN CASE MATERIAL IS SPILLED:	SOAK UP WITH DRY ABSORBENT AND FLUSH AREA WITH LARGE AMOUNTS OF WATER.
WASTE DISPOSAL METHODS:	DISPOSE OF ACCORDING TO FEDERAL, STATE, AND LOCAL REGULATIONS.

SECTION IX • ADDITIONAL REGULATORY INFORMATION

S
A
R
A

T
I
T
L
E

I
I
I

UNDER THE PROVISIONS OF TITLE 111, SECTION 311/312 OF THE SUPERFUND AMENDMENTS AND REAUTHORIZATIONS ACT, THIS PRODUCT IS CLASSIFIED INTO THE FOLLOWING HAZARD CATEGORIES: NONE

THIS PRODUCT DOES NOT CONTAIN SECTION 313 REPORTABLE INGREDIENTS.

THE INFORMATION CONTAINED HEREIN IS BASED ON AVAILABLE DATA AND IS BELIEVED TO BE CORRECT. HOWEVER, EOS REMEDIATION, INC. MAKES NO WARRANTY, EXPRESSED OR IMPLIED, REGARDING THE ACCURACY OF THIS DATA OR THE RESULTS TO BE OBTAINED THEREOF. THIS INFORMATION AND PRODUCT ARE FURNISHED ON THE CONDITION THAT THE PERSON RECEIVING THEM SHALL MAKE HIS/HER OWN DETERMINATION AS TO THE SUITABILITY OF THE PRODUCT FOR HIS/HER PARTICULAR PURPOSE.

ATTACHMENT 1-B

DIAMMONIUM PHOSPHATE MATERIAL SAFETY DATA SHEET

Material Safety Data Sheet

DIAMMONIUM PHOSPHATE

Date Prepared: 11/01/07 Supersedes Date: 8/13/04

1. PRODUCT AND COMPANY DESCRIPTION

Innophos
PO Box 8000
259 Prospect Plains Road
Cranbury NJ 08512-8000

Emergency Phone Numbers:
FOR EMERGENCIES INVOLVING A SPILL, LEAK, FIRE, EXPOSURE OR ACCIDENT CONTACT: CHEMTREC (800-424-9300 within the United States or 703-527-3887 for international collect calls) or INNOPHOS ECT (Emergency Communication Team) at 615-386-7816.

For Product Information:
(609) 495-2495

Chemical Name or Synonym:
AMMONIUM PHOSPHATE, SECONDARY; DAP; AMMONIUM PHOSPHATE, DIBASIC

Molecular Formula:
$(NH_4)_2HPO_4$

2. COMPOSITION/INFORMATION ON INGREDIENTS

Component	CAS Reg Number	OSHA Hazard	Percentage
DIAMMONIUM PHOSPHATE	7783-28-0	Y	100

3. HAZARDS IDENTIFICATION

A. EMERGENCY OVERVIEW:

Physical Appearance and Odor:
white powder solid, ammonia-like odor.

Warning Statements:
CAUTION! MAY CAUSE SKIN AND EYE IRRITATION.

B. POTENTIAL HEALTH EFFECTS:

Acute Eye:
May cause irritation.

Acute Skin:
Skin absorption not likely. May cause irritation.

Acute Inhalation:
May cause upper respiratory tract irritation.

Acute Ingestion:
Ingestion of large quantities may cause nausea, vomiting, diarrhea, abdominal cramps.

Chronic Effects:
This product does not contain any ingredient designated by IARC, NTP, ACGIH or OSHA as probable or suspected human carcinogens.

4. FIRST AID MEASURES

FIRST AID MEASURES FOR ACCIDENTAL:

Eye Exposure:
Hold eyelids open and flush with a steady, gentle stream of water for at least 15 minutes. Seek medical attention if irritation develops or persists or if visual changes occur.

Skin Exposure:
In case of contact, immediately wash with plenty of soap and water for at least 5 minutes. Seek medical attention if irritation developes or persists. Remove contaminated clothing and shoes. Clean contaminated clothing and shoes before re-use.

Inhalation:
If respiratory irritation or distress occurs remove victim to fresh air. Seek medical attention if respiratory irritation or distress continues.

Ingestion:
Do not induce vomiting, unless directed to do so by a physician. If victim is conscious and alert, give 2-3 glasses of water to drink. Seek immediate medical attention. Do not leave victim unattended. To prevent aspiration of swallowed product, lay victim on side with head lower than waist. Vomiting may occur spontaneously. If vomiting occurs and the victim is conscious, give water to further dilute the chemical. Also see Note To Physician.

MEDICAL CONDITIONS POSSIBLY AGGRAVATED BY EXPOSURE:
Inhalation of product may aggravate existing chronic respiratory problems such as asthma, emphysema or bronchitis. Skin contact may aggravate existing skin disease.

NOTES TO PHYSICIAN:
All treatments should be based on observed signs and symptoms of distress in the patient. Consideration should be given to the possibility that overexposure to materials other than this product may have occurred.

Ingestion of large quantities of phosphate salts (over 1.0 grams for an adult) may cause an osmotic catharsis resulting in diarrhea and probable abdominal cramps. Larger doses such as 4-8 grams will almost certainly cause these effects in everyone. In healthy individuals most of the ingested salt will be excreted in the feces with the diarrhea and, thus, not cause any systemic toxicity. Doses greater than 10 grams hypothetically may cause systemic toxicity. Treatment should take into consideration both anionic and cation portion of the molecule. The following treatments should be considered for the specific group(s) of phosphate salts found in this product:

--All phosphate salts, except calcium salts, have a hypothetical risk of hypocalcemia, so calcium levels should be

monitored.

--Ammonium salts have a hypothetical risk of ammonia toxicity. In addition to calcium levels, ammonia and phosphate levels should be monitored.

--Potassium salts have a hypothetical risk of hyperkalemia which can cause cardiac arrhythmia. In addition to calcium levels, potassium and phosphate levels should be monitored. Also consider continuous EKG monitoring to detect hyperkalemia.

--Sodium salts have a hypothetical risk of hypernatremia. In addition to calcium levels, sodium and phosphate levels should be monitored.

5. FIRE FIGHTING MEASURES

FIRE HAZARD DATA:

Flash Point:
Not Applicable

Extinguishing Media:
Not combustible. Use extinguishing method suitable for surrounding fire.

Special Fire Fighting Procedures:
Firefighters should wear NIOSH/MSHA approved self-contained breathing apparatus and full protective clothing. Dike area to prevent runoff and contamination of water sources. Dispose of fire control water later.

Unusual Fire and Explosion Hazards:
Not combustible.

Hazardous Decomposition Materials (Under Fire Conditions):
ammonia
oxides of nitrogen
oxides of phosphorus

6. ACCIDENTAL RELEASE MEASURES

Evacuation Procedures and Safety:
Wear appropriate protective gear for the situation. See Personal Protection information in Section 8.

Containment of Spill:
Dike or retain dilution water or water from firefighting for later disposal. Follow procedure described below under Cleanup and Disposal of Spill.

Cleanup and Disposal of Spill:
Sweep or vacuum up and place in an appropriate closed container (see Section 7: Handling and Storage). Avoid creation of dusty conditions. Clean up residual material by washing area with water and detergent.

Environmental and Regulatory Reporting:
Runoff from fire control or dilution water may cause pollution. Prevent material from entering public sewer system or any waterways. Spills may be reportable to the National Response Center (800-424-8802) and to state and/or local agencies.

7. HANDLING AND STORAGE

Minimum/Maximum Storage Temperatures:
Not Available

Handling:
Keep containers closed when not being used. Avoid breathing dusts or vapors. Avoid direct or prolonged contact with skin and eyes.

Storage:
Store in an area that is cool, dry, well-ventilated, Store in closed containers. This product is hygroscopic and tends to cake on storage.

8. EXPOSURE CONTROLS/PERSONAL PROTECTION

Introductory Remarks:
These recommendations provide general guidance for handling this product. Because specific work environments and material handling practices vary, safety procedures should be developed for each intended application. While developing safe handling procedures, do not overlook the need to clean equipment and piping systems for maintenance and repairs. Waste resulting from these procedures should be handled in accordance with Section 13: Disposal Considerations.

Assistance with selection, use and maintenance of worker protection equipment is generally available from equipment manufacturers.

Exposure Guidelines:
Exposure limits represent regulated or recommended worker breathing zone concentrations measured by validated sampling and analytical methods, meeting the regulatory requirements. The following limits apply to this material, where, if indicated, S=skin and C=ceiling limit:

PARTICULATES NOT OTHERWISE REGULATED RESPIRABLE FRACTION

	Notes	TWA	STEL
OSHA		5 mg/cu m	

PARTICULATES NOT OTHERWISE REGULATED TOTAL DUST

	Notes	TWA	STEL
OSHA		15 mg/cu m	

Engineering Controls:
Where engineering controls are indicated by use conditions or a potential for excessive exposure exists, the following traditional exposure control techniques may be used to effectively minimize employee exposures: general area dilution/exhaust ventilation.

Respiratory Protection:
When respirators are required, select NIOSH/MSHA approved equipment based on actual or potential airborne concentrations and in accordance with the appropriate regulatory standards and/or industrial recommendations.

Under normal conditions, in the absence of other airborne contaminants, the following devices should provide protection from this material up to the conditions specified by the appropriate OSHA, WHMIS or ANSI standard(s): dust/mist filtering respirator.

Eye/Face Protection:
Eye and face protection requirements will vary dependent upon work environment conditions and material handling practices. Appropriate ANSI Z87 approved equipment should be selected for the particular use intended for this material.

Eye contact should be prevented through use of chemical safety glasses with side shields or splash proof goggles. An emergency eye wash must be readily accessible to the work area.

Skin Protection:
Skin contact should be minimized through use of gloves and suitable long-sleeved clothing (i.e., shirts and pants). Consideration must be given both to durability as well as permeation resistance.

Work Practice Controls:
Personal hygiene is an important work practice exposure control measure and the following general measures should be taken when working with or handling this material:

(1) Do not use, and/or consume foods, beverages, tobacco products, or cosmetics in areas where this material is stored.
(2) Wash hands and face carefully before eating, drinking, using tobacco, applying cosmetics, or using the toilet.
(3) Wash exposed skin promptly to remove accidental splashes or contact with this material.

9. PHYSICAL AND CHEMICAL PROPERTIES

Physical and Chemical properties here represent typical properties of this product. Contact the business area using the Product Information phone number in Section 1 for its exact specifications.

Physical Appearance:
white powder solid.

Odor:
ammonia-like odor.

pH:
8 at 1 wt/wt%.

Specific Gravity:
Not Available

Water Solubility:
soluble 41 wt/wt% at 20 C (68 F).

Melting Point Range:
Not Available

Boiling Point Range:
Not Available

Vapor Pressure:
Not Available

Vapor Density:
Not Available

Molecular Weight:

132.06

10. STABILITY AND REACTIVITY

Chemical Stability:
This material is stable under normal handling and storage conditions described in Section 7.

Conditions To Be Avoided:
dusting conditions
extreme heat
extreme humidity

Materials/Chemicals To Be Avoided:
strong bases
sodium hypochlorite

Decomposition Temperature Range:
155 C (311 F)

The Following Hazardous Decomposition Products Might Be Expected:

Decomposition Type: thermal
ammonia
phosphoric acid
oxides of nitrogen
oxides of phosphorus

Hazardous Polymerization Will Not Occur.

Avoid The Following To Inhibit Hazardous Polymerization:
not applicable

11. TOXICOLOGICAL INFORMATION

Acute Eye Irritation:
No test data found for product.

Acute Skin Irritation:
Toxicological Information and Interpretation:
skin - skin irritation, rabbit. Mildly irritating.

Acute Dermal Toxicity:
No test data found for product.

Acute Respiratory Irritation:
No test data found for product.

Acute Inhalation Toxicity:
No test data found for product.

Acute Oral Toxicity:

Toxicological Information and Interpretation:
LD50 - lethal dose 50% of test species, > 1000 mg/kg, rat.

Chronic Toxicity:
This product does not contain any substances that are considered by OSHA, NTP, IARC or ACGIH to be "probable" or "suspected" human carcinogens.

12. ECOLOGICAL INFORMATION

Ecotoxicological Information:
Ecotoxological Information and Interpretation:
LC50 - lethal concentration 50% of test species, 155 mg/l/96 hr, fish: Pimephales promelas.

Chemical Fate Information:
No data found for product.

13. DISPOSAL CONSIDERATIONS

Waste Disposal Method:
Chemical additions, processing or otherwise altering this material may make the waste management information presented in this MSDS incomplete, inaccurate or otherwise inappropriate. Please be advised that state and local requirements for waste disposal may be more restrictive or otherwise different from federal laws and regulations. Consult state and local regulations regarding the proper disposal of this material.

EPA Hazardous Waste - NO

14. TRANSPORTATION INFORMATION

Transportation Status: IMPORTANT! Statements below provide additional data on listed DOT classification.
The listed Transportation Classification does not address regulatory variations due to changes in package size, mode of shipment or other regulatory descriptors.

US Department of Transportation
Shipping Name:
NOT REGULATED

15. REGULATORY INFORMATION

Inventory Status

Inventory	Status
UNITED STATES (TSCA)	Y
CANADA (DSL)	Y
EUROPE (EINECS/ELINCS)	Y

AUSTRALIA (AICS)	Y
JAPAN (MITI)	Y
SOUTH KOREA (KECL)	Y

Y = All ingredients are on the inventory.
E = All ingredients are on the inventory or exempt from listing.
P = One or more ingredients fall under the polymer exemption or are on the no longer polymer list. All other ingredients are on the inventory or exempt from listing.
N = Not determined or one or more ingredients are not on the inventory and are not exempt from listing.

FEDERAL REGULATIONS

Inventory Issues:
All functional components of this product are listed on the TSCA Inventory.

SARA Title III Hazard Classes:

Fire Hazard	- NO
Reactive Hazard	- NO
Release of Pressure	- NO
Acute Health Hazard	- YES
Chronic Health Hazard	- NO

OTHER FEDERAL REGULATIONS:

FDA Status:
This product meets the compositional requirements of:
21 CFR 184.1141B AMMONIUM PHOSPHATE, DIBASIC

STATE REGULATIONS:
This product does not contain any components that are regulated under California Proposition 65.

16. OTHER INFORMATION

National Fire Protection Association Hazard Ratings--NFPA(R):

1	Health Hazard Rating--Slight
0	Flammability Rating--Minimal
0	Instability Rating--Minimal

National Paint & Coating Hazardous Materials Identification System--HMIS(R):

1	Health Hazard Rating--Slight
0	Flammability Rating--Minimal
0	Reactivity Rating--Minimal

Reason for Revisions:
Change and/or addition made to Section 4, Section 12.

Key Legend Information:
ACGIH - American Conference of Governmental Industrial Hygienists
OSHA - Occupational Safety and Health Administration
TLV - Threshold Limit Value
PEL - Permissable Exposure Limit
TWA - Time Weighted Average

STEL - Short Term
Exposure Limit NTP -
National Toxicology
Program
IARC - International Agency for Research on Cancer
ND - Not determined
RPI - INNOPHOS Established Exposure Limits

Disclaimer:
The information herein is given in good faith but no warranty, expressed or implied, is made.

** End of MSDS
Document **

ATTACHMENT 2

FORM 531

ADEM HYDROGEOLOGY SITE EVALUATION REPORT FORM

HYDROGEOLOGIST CONDUCTING EVALUATION: Mark Shoemaker DATE OF SITE VISIT March 2015

OTHERS PRESENT DURING THE EVALUATION:

FACILITY NAME: RSA-204, Oxidizer Facility, Building 7691

ADDRESS: RSA-204

CITY: Redstone Arsenal ZIP: 35898 COUNTY: Madison

CONTACT: Barry Hodges TELEPHONE: 256-876-6492

TYPE OF INSPECTION: *(Indicate permit type.)* Class V UIC

TOPO QUADRANGLE / SECTION / TOWNSHIP / RANGE	LATITUDE & LONGITUDE:
Farley Quad, T5S, R1W, Section II	See attached description method: check one 1) GPS ✓ 2) surveyed___ 3) digitized from map___ 4) computer map program___ 5) measured from map___ 6) unknown___

CHECKLIST: (Y) *yes or (N) no*

PITS EXCAVATED AND LOGGED	(N)		
DEPTH TO GROUNDWATER DETERMINED	(Y)	FEET BELOW SURFACE	16
DEPTH TO BEDROCK DETERMINED	(Y)	FEET BELOW SURFACE	18'-45'
WATER WELLS INVENTORIED	(Y)	NUMBER OF RESIDENTIAL WELLS	0
SAMPLES COLLECTED	(Y)	DISTANCE TO CLOSEST RESIDENTIAL WELL	>0.5 miles
		NUMBER OF PUBLIC SUPPLY WELLS	0
		DISTANCE TO CLOSEST PUBLIC WELL	>0.5 miles

TOPOGRAPHIC DESCRIPTION and SURFACE DRAINAGE: See attached description

PHYSIOGRAPHIC PROVINCE: Cumberland Plataeu

SCS SOIL TYPES: Limestone Bedrock

GEOLOGIC FORMATION: Tuscumbia Limestone

SURFACE WATER BODIES: Tennessee River, wetlands, unnamed surface water drainages

ADEM DIVISION 6 RECEIVING STREAM CLASSIFICATION: Public water supply/ fiish and wildlife

USGS FLOOD PRONE AREA : N/A

SITE HYDROGEOLOGIC DESCRIPTION: (Attach additional pages as necessary) See attached description

WELL HEAD PROTECTION AREA: None

NOTES:

ACCESS INFORMATION: Contact Larry Galloway (256-842-2850)

EXPLORATORY PITS OR BORING LOGS: ***Attach additional pages as necessary. Include notes and dates.***

Form 531 Topographic Description and Surface Drainage

There are three earthen blast berms on the site, each approximately 16 feet high. Otherwise, surface topography slopes to the west along Magazine road is approximately 592 feet amsl, to 572 feet amsl northeast near the intersection Eagle and Faclon Roads. The central parts of the site are mostly flat. The elevation at the southern treatment area is approximately 582 feet amsl, and approximately 578 feet amsl at the northern treatment area (Figure I-2).

No permanent surface water or wetland areas are present in the immediate vicinity of the injections. Shallow ephemeral roadside drainage ditches are along Eagle and Falcon Roads northeast of the injection areas. A shallow ephemeral drainage ditch exits the site from the southeast (Figures I-1 and I-2).

Form 531 Site Hydrogeologic Description

Groundwater beneath RSA-204 occurs in the unconsolidated overburden and in the upper portion of the carbonate bedrock. The overburden and upper bedrock comprise a single interconnected aquifer. At depth, groundwater occurs under semi-confined conditions, flowing along discrete joints and bedding-plane partings. The water table across RSA-204 and the larger RSA-146 groundwater unit is generally flat, mimicking local topography. Figure I-4 shows groundwater flow based on the groundwater elevation measured in April 2016. Groundwater flow direction is radial at RSA-204. Average depth to groundwater in overburden and interface wells in proximity to RSA-204 fluctuates seasonally, ranging from approximately 6.5 to 23 feet below ground surface (bgs) with a seasonal average depth of approximately 16 feet bgs. The groundwater elevations in overburden and interface monitoring wells ranged from 559.4 to 575.5 ft amsl. Four shallow bedrock wells were installed in summer of 2014 (204-RS2668, 204-RS2669, 204-RS2670, and 204-RS2671). Depth to water in these bedrock wells (measured in December 2014) ranged from 14.32 to 18.73 ft bgs. The groundwater elevations in bedrock monitoring wells ranged from 562.20 to 563.46 ft amsl.

Form 531 Latitude and Longitude

Loc_ID	Lat	Long
204INJ-11	34.62088650	-86.61000310
204INJ-26	34.62183217	-86.61030675

ATTACHMENT 3

BORING LOGS

CH2MHILL	PROJECT NUMBER 138187.A0.03	WELL NUMBER RS690 SHEET 1 OF 1

WELL COMPLETION DIAGRAM

PROJECT : RARE North Plant Phase II EBS LOCATION : Redstone Arsenal, Alabama

DRILLING CONTRACTOR : Boart Longyear

DRILLING METHOD AND EQUIPMENT USED : 6-inch diameter Rota-Sonic

WATER LEVELS : 21.26 ft BTOC (8/11/97) START : 7/11/97 END : 7/11/97 LOGGER : D. Traylor

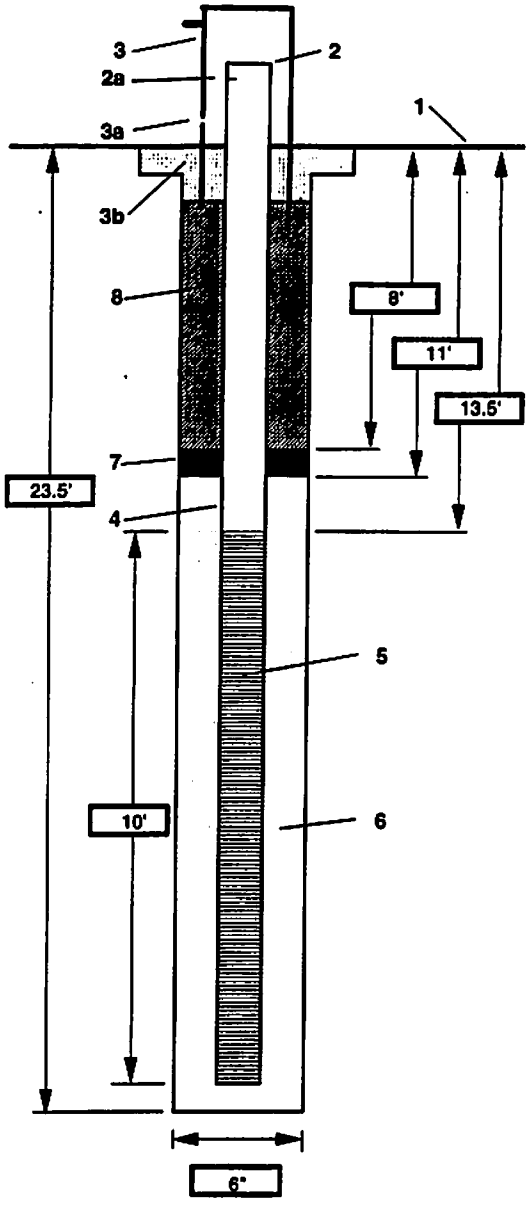

1- Ground elevation at well	579.47 ft NGVD
2- Top of casing elevation	582.59 ft NGVD
a) vent hole?	No
3- Wellhead protection cover type	4" diameter steel
a) weep hole?	No
b) concrete pad dimensions	3' x 3' x 4"
4- Dia./type of well casing	2" ID Schedule 40 PVC
5- Type/slot size of screen	2" ID Schedule 40 PVC, 0.01" slot
6- Type screen filter	20/40 graded silica sand
7- Type of seal	3/8" diameter bentonite pellets
8- Grout	
a) Grout mix used	Cement/bentonite
b) Method of placement	Tremie pipe
Development method	Bailer

Comments Top of limestone bedrock at 23'

CH2MHILL

PROJECT NUMBER	BORING NUMBER	
138187.A0.03	RS690	SHEET 1 OF 1

SOIL BORING LOG

PROJECT : RARE North Plant Phase II EBS LOCATION : Redstone Arsenal, Alabama

ELEVATION : 582.59 ft (TOC), 579.47 ft (Grnd.) DRILLING CONTRACTOR Boart Longyear

DRILLING METHOD AND EQUIPMENT USED : 6" diameter Rota-Sonic

WATER LEVELS : 21.26 ft BTOC (8/11/97) START : 7/11/97 END : 7/11/97 LOGGER : D. Traylor

DEPTH BELOW SURFACE (FT)	INTERVAL (FT)	RECOVERY (FT)	#/TYPE	STANDARD PENETRATION TEST RESULTS 6"-6"-6"-6" (N)	CORE DESCRIPTION: SOIL NAME, USCS GROUP SYMBOL, COLOR, MOISTURE CONTENT, RELATIVE DENSITY, OR CONSISTENCY, SOIL STRUCTURE, MINERALOGY.	COMMENTS: DEPTH OF CASING, DRILLING RATE, DRILLING FLUID LOSS, TESTS, AND INSTRUMENTATION.
	0	5.0	1-S		LEAN CLAY WITH GRAVEL, (CL), dark reddish-brown, moist, stiff, contains angular weathered chert gravel up to 1" dia.	Start at 1145
5	5	3.0	2-S		GRAVELLY LEAN CLAY, (CL), mottled reddish-brown and tan, moist, hard, contains angular chert gravel up to 2" dia.	
	8	2.7	3-S		SILTY LEAN CLAY W/ GRAVEL, (CL), interlayered reddish-brown and tan, moist, hard, contains weathered chert gravel up to 2" dia.	
10	11	3.0	4-S		SILTY LEAN CLAY W/ GRAVEL, (CL), mottled reddish-brown and tan, moist, very stiff, contains weathered chert gravel up to 1" dia., abundant black manganese staining	
15	15	3.3	5-S		SILTY LEAN CLAY W/ GRAVEL, (CL), as 4-S, chert boulder at approx. 19'	
20	20	3.0	6-S		SILTY LEAN CLAY W/ GRAVEL, (CL), as 5-S except moist to wet, lower 6" is LIMESTONE BEDROCK	Bedrock at 23'
	23.5					
25					END OF BORING AT 23.5'	End at 1335
30						Install a 2" ID Schedule 40 PVC monitoring well: 0.01" slot screen: 13.5' - 23.5' Sand pack: 11' - 23.5' Bentonite seal: 8' - 11'
35						
40						

CH2MHILL	PROJECT NUMBER 138187.A0.03	WELL NUMBER RS691 SHEET 1 OF 1

WELL COMPLETION DIAGRAM

PROJECT : RARE North Plant Phase II EBS LOCATION : Redstone Arsenal, Alabama

DRILLING CONTRACTOR : Boart Longyear

DRILLING METHOD AND EQUIPMENT USED : 6-inch diameter Rota-Sonic

WATER LEVELS : 19.15 ft BTOC (8/11/97) START : 7/11/97 END : 7/11/97 LOGGER : D. Traylor

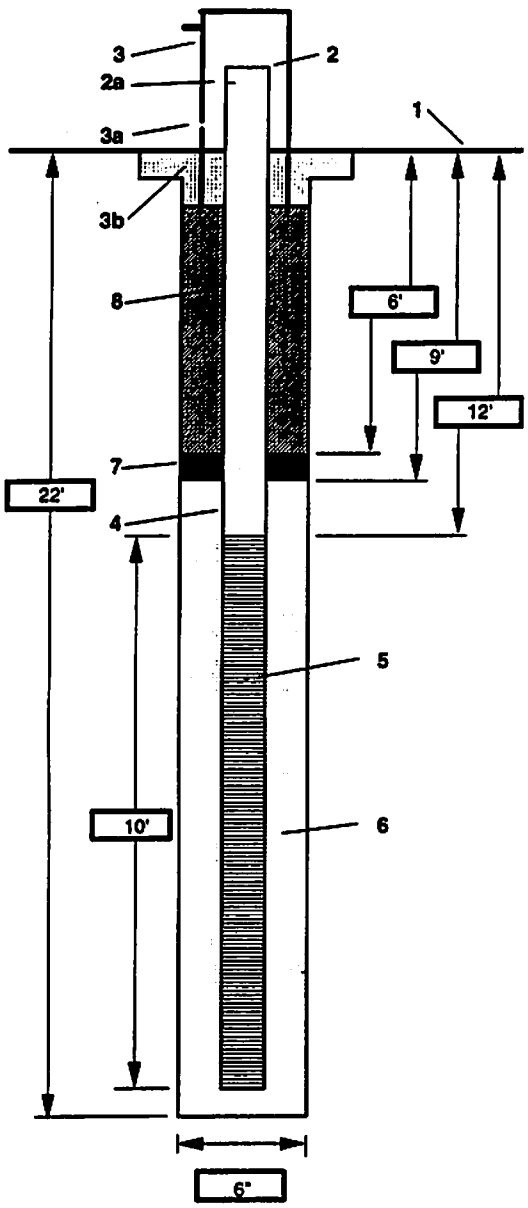

1- Ground elevation at well	577.53 ft NGVD
2- Top of casing elevation	580.64 ft NGVD
a) vent hole?	No
3- Wellhead protection cover type	4" diameter steel
a) weep hole?	No
b) concrete pad dimensions	3' x 3' x 4"
4- Dia./type of well casing	2" ID Schedule 40 PVC
5- Type/slot size of screen	2" ID Schedule 40 PVC, 0.01" slot
6- Type screen filter	20/40 graded silica sand
7- Type of seal	3/8" diameter bentonite pellets
8- Grout	
a) Grout mix used	Cement/bentonite
b) Method of placement	Tremie pipe
Development method	Bailer

Comments Top of limestone bedrock at 20.5'

CH2MHILL

PROJECT NUMBER	BORING NUMBER	
138187.A0.03	RS691	SHEET 1 OF 1

SOIL BORING LOG

PROJECT : RARE North Plant Phase II EBS LOCATION : Redstone Arsenal, Alabama

ELEVATION : 580.64 ft (TOC), 577.53 ft (Grnd.) DRILLING CONTRACTOR Boart Longyear

DRILLING METHOD AND EQUIPMENT USED : 6" diameter Rota-Sonic

WATER LEVELS : 19.15 ft BTOC (8/11/97) START : 7/11/97 END : 7/11/97 LOGGER : D. Traylor

DEPTH BELOW SURFACE (FT)	INTERVAL (FT)	RECOVERY (FT)	#/TYPE	STANDARD PENETRATION TEST RESULTS 6"-6"-6"-6" (N)	CORE DESCRIPTION: SOIL NAME, USCS GROUP SYMBOL, COLOR, MOISTURE CONTENT, RELATIVE DENSITY, OR CONSISTENCY, SOIL STRUCTURE, MINERALOGY.	COMMENTS: DEPTH OF CASING, DRILLING RATE, DRILLING FLUID LOSS, TESTS, AND INSTRUMENTATION.
	0	5.0	1-S		LEAN CLAY, (CL), dark reddish-brown, moist, soft, layer of wet chert rubble at 5'	Start at 0855
5	5	2.7	2-S		GRAVELLY LEAN CLAY, (CL), dark reddish-brown to lt. brown, dry, hard, contains weathered chert sand and gravel, gravel up to 1" dia.	
	8	5.0	3-S		GRAVELLY LEAN CLAY, (CL), as 2-S	
10						
15	15					Driller notes very soft drilling from 13' - 1!
	18	3.0	4-S		GRAVELLY LEAN CLAY, (CL), as 2-S except very hard	
20	20	0.5	5-S		GRAVELLY LEAN CLAY, (CL), as 4-S except moist to wet and softer	
	22	1.6	6-S		LIMESTONE BEDROCK	Bedrock at 20.5'
					END OF BORING AT 22'	End at 1005
25						Install a 2" ID Schedule 40 PVC monitoring well: 0.01" slot screen: 12' - 22' Sand pack: 9' - 22' Bentonite seal: 6' - 9'
30						
35						
40						

ORIGINAL

WJC

HTRW DRILLING LOG

Company Name: Shaw Environmental & Infrastructure	District: Savannah USACE	Hole Number: OU-10-RS1223
	Drill Subcontractor: Miller Drilling	Sheet 1 of 4 Sheets
Project: Redstone Arsenal	Location: Madison County, Huntsville, Alabama	
Name of Driller: Stephen Gantney	Manufacturer's Designation of Drill: CME ATV Mobile Drill Rig	
Size and Types of Drilling and Sampling Equipment: CME ATV Mobile Drill Rig; 8.25" HSA; 5 3/8" roller bit; 5' CME Sampler	Hole Location: OU-10-RS 1223	
	Surface Elevation: —	
	Date Started: 12-09-02	Date Completed: 12-10-02
Overburden Thickness: > 24.0'	Depth Groundwater Encountered: 22.5'	
Depth Drilled Into Rock: 5.0'	Depth to Water and Elapsed Time After Drilling Completed: —	
Total Depth of Hole: 29.0'	Other Water Level Measurements (Specify): —	

Geotechnical Samples	Disturbed	Undisturbed	Total Number of Core Boxes
—	—	—	—

Samples for Chemical Analysis	VOC	Metals	Other	Other	Other	Total Core Recovery
—	—	—	—	—	TCLP	19.9'/24.0'

Disposition of Hole	Backfilled	Monitoring Well	Other	Signature of Geologist
✓	—	✓	—	Brian Rhodes

Location Sketch/Comments

Scale: (not to scale)

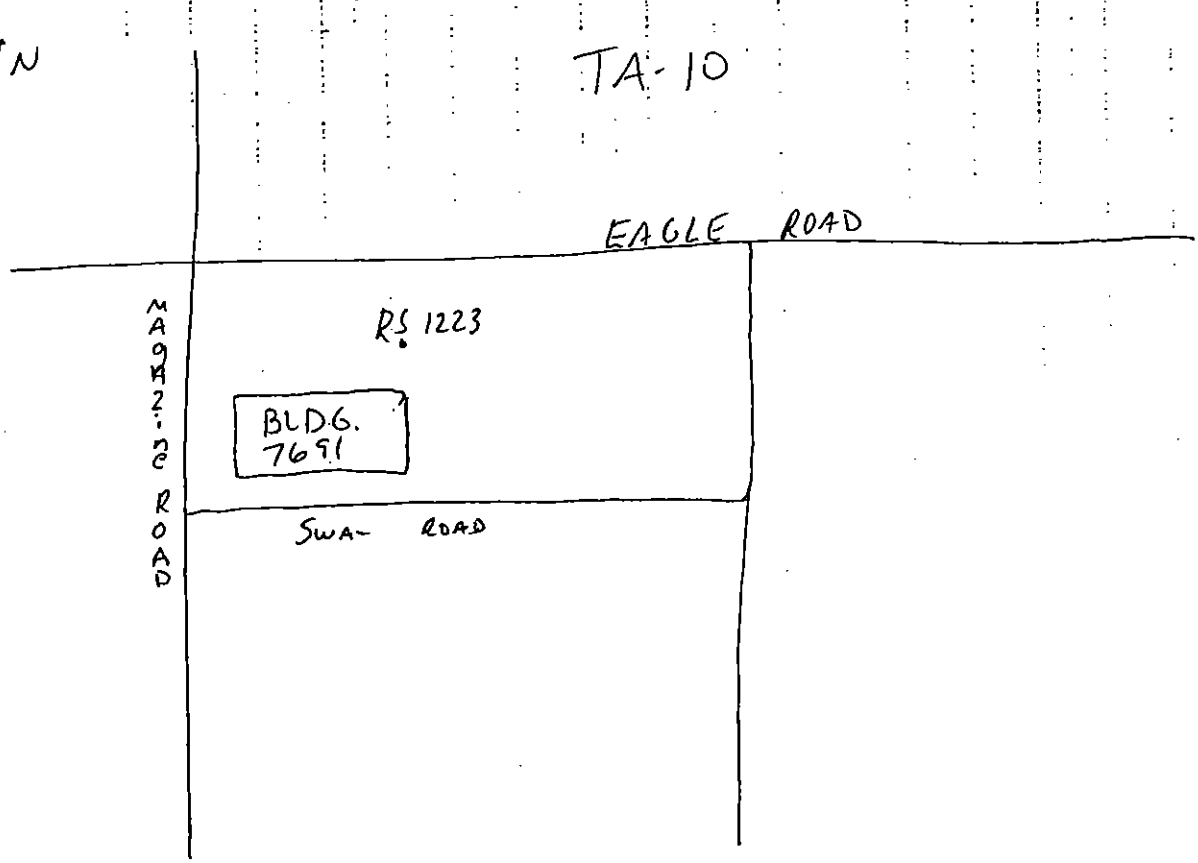

Project: Redstone Arsenal	Hole Number: OU-10-RS1223

ORIGINAL

HTRW DRILLING LOG

(continuation sheet)

Hole Number: OU-10-RS1223

Project: Redstone Arsenal | Geologist: Brian Rhodes | Sheet 2 of 4 Sheets

Elev (ft)	Depth (ft) from	Description of Materials	USCS Class.	Field Screening Results (ppm)	Geotech. Sample or Core	Analytical Sample No.	Recovery (ft)	Remarks
	0	Grass, Organics						Begin Auger Drilling on 12-09-02
		0.5" - 5.0' Clay, Dark Reddish Brown (2.5yr 3/4)	CL/ML	2.7 PID				Stephen Garnting (Driller)
	1	Soft, non to low plasticity, dry, silty, some fine sands		6.1 FID				Brian Rhodes (Geologist)
	2	roots and black organics					4.1'/5.0'	
	3							
	4							
	5	5.0' - 6.7' Clay As Above	CL/ML					
	6			3.0 PID				
		6.7' - 10.0' Clay, Yellowish Brown (10yr 4/6) damp, medium to high plasticity		3.6 FID			3.9'/5.0'	
	7							
	8	Abundant black organics	CL					
	9	9.0' Chert fragments						
	10							

Project: Redstone Arsenal, IT Project Number 772850 | Hole Number: OU-10-RS1223

Htrwc.xls

ORIGINAL

HTRW DRILLING LOG (continuation sheet)

Hole Number: OU-10-RS1223

Project: Redstone Arsenal | Geologist: Brian Rhodes | Sheet 3 of 4 Sheets

Elev (ft)	Depth (ft bgs)	Description of Materials	USCS Symbol	Field Screening Results (ppm)	Geotech. Sample or Core Blow No.	Analytical Sample No.	Recovery (ft)	Remarks
	10	10.0'- 12.9' Clay, Yellowish Brown (10yr 4/6) dry to damp, medium to high plasticity chert fragments throughout	CL	4.2 Pid 5.1 Fid			5.0'/5.0'	
	11							
	12							
	13	13.0'- 15.0' Clay, yellowish red (5yr 5/8) stiff, dry, low to medium plasticity chert throughout						
	14							
	15							
	16			5.0 Pid				
	17	17.0' weathered limestone	CL	5.7 Fid			4.2'/5.0'	
	18							
	19							
	20							

Project: Redstone Arsenal, IT Project Number 772650 | Hole Number: OU-10-RS1223

Htrwc.xls

ORIGINAL

HTRW DRILLING LOG (continuation sheet)

Hole Number: OU-10 - RS1223

Project: Redstone Arsenal | Geologist: Brian Rhodes | Sheet 4 of 4 Sheets

Elev (ft)	Depth (ft)	Description of Materials	USCS Class	Field Screening Results (ppm)	Geotech. Sample or Core	Analytical Sample No.	Recovery (ft)	Remarks
	20	20.0' - 24.0' Clay, yellowish red (5yr 5/8) stiff, dry to damp, low to medium plasticity, Abundant chert		3.7 pid				
	21			5.6 Fid			2.7' / 4.0'	
	22		CL					
		22.5' saturated weathered limestone and chert						Reach Auger Ref. @ 24.0' bgs on 12-09-02. Set 6.0" temp. pvc casing on 12-09-02
	23							
	24	24.0' Auger Refusal 24.0' - 29.0' Limestone, Solid, unweathered						Begin 5 7/8" roller bit drilling on 12-10-02
	25							
	26		LS	N/A			N/A	
	27							
	28							Drilled to 29.0' bgs on 12-10-02 Set well to 29.0' bgs on 12-10-02 10' screen 20' riser 9 bags sand 1.5 buckets bentonite
	29	29.0' Bottom of Borehole & Well						
	30							

Project: Redstone Arsenal, IT Project Number 772650 | Hole Number: OU-10-RS1223

Htrwc.xls

ORIGINAL (WC)

Monitoring Well Construction Form (Bedrock)

Project:	Redstone Arsenal	Well Number:	RS 1223
Location:	Madison County, Huntsville, Alabama	Site Location:	RSA OU # 10
Client:	Savannah USACE	Installation Date	12-10-02
Subcontractor:	Miller Drilling	Northing:	TBD
Driller:	Stephen Gauntney	Easting:	TBD
Shaw Field Representative:	Brian Rhodes	Shaw Project Number:	835423

Protective Cover Elevation (ft): TBD

Top of Casing Elevation (ft): TBD

Top of Casing Stickup (ft): 3.0'

Land Surface Elevation (ft): TBD

Approximate Diameter of Section 1 Borehole (in): 8.25"

Diameter of Surface Casing (in): ~~6.0"~~ BR N/A

Depth to Bedrock (ft): 24.0'

Bottom of Surface Casing (ft): ~~24.0'~~ BR N/A

Depth to Water (ft):

During Drilling: 22.5'

Date: 12-09-02

Post Development: TOC

Date:

Approximate Diameter of Section 2 Borehole (in): 5 7/8"

Well Casing Diameter (in): 2.0"

Top of Bentonite Seal (ft): 12.00'

Top of Filter Pack (ft): 15.50'

Top of Screen Interval (ft): 18.75'

Bottom of Screen Interval (ft): 28.75'

Bottom of Well (ft): 29.0'

Bottom of Filter Pack (ft): 29.0'

Bottom of Borehole (ft): 29.0'

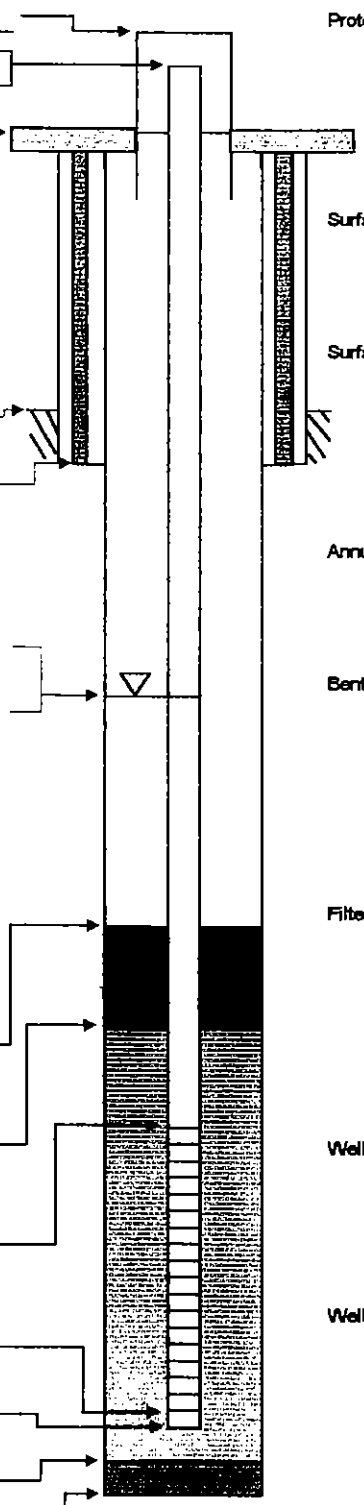

Protective Casing:

Type: Aluminum

Dimensions (in): 4" x 4"

Length (ft): 5'

Guard Post: 4-Steel

Surface Pad:

Dimensions: 3' x 3' x 4"

Type: (Concrete)

Surface Casing:

Type: Temp. PVC Casing

Diameter (in): 6.0"

Installation: Tremie Haliburton Cementing Plug Other Plug

Annular Space Seal:

Type: Bentonite (Cement Grout)

Installation: Gravity (Tremie) Pumped

Bentonite Seal:

Manufacturer: DSI

Type: (Pellets) Slurry

Installation: 6-in lifts One Section (Gravity) Tremie Pumped

Hydration time (hrs): >24

Filter Pack Material:

Manufacturer: DSI

Product Name: Filter Sand

Size: #1

Volume Added (ft³): 9 bags

Installation: Gravity (Tremie)

Well Casing:

Manufacturer: Johnson

Type: PVC Sch.40

Diameter (in): 2.0"

Well Screen Casing:

Manufacturer: Johnson

Type: PVC Sch.40

Slot Size (in): .010

Slot Type: (Continous) Factory slot

Sump/End Cap: End Cap

Backfill Material: N/A

Depths and heights are referenced to ground surface unless specified TOC.

All elevations are referenced to MSL (NAVD 88).

Well not installed.

TBD - To Be Determined

12/10/02 K-RS1224

HTRW DRILLING LOG

District	Savannah USACE
Hole Number	OU-10-K-RS1224
Company Name	Shaw Environmental & Infrastructure
Drill Subcontractor	Miller Drilling
Sheet	1 of 5 Sheets
Project	Redstone Arsenal
Location	Madison County, Huntsville, Alabama
Name of Driller	Stephen Gauntney
Manufacturer's Designation of Drill	CME ATV Mobile Drill Rig
Size and Type of Drilling and Sampling Equipment	CME ATV Mobile Drill Rig; 8.25" HSA; 5' CME Sampler; 5 7/8" Roller Bit
Hole Location	OU-10-K-RS 1224 in TA-10 near Bldg 7689
Surface Elevation	TBD
Date Started	12-02-02
Date Completed	12-04-02
Overburden Thickness	38.0' 12/10/02
Depth Groundwater Encountered	30.0'
Depth Drilled Into Rock	5.0'
Depth to Water and Elapsed Time After Drilling Completed	
Total Depth of Hole	36.0'
Other Water Level Measurements (Specify)	

Undisturbed Samples	Disturbed	Undisturbed	Total Number of Core Boxes

Samples for Chemical Analysis	VOC	Metals	Other	Other	Other	Total Core Recovery
					TCLP	26.3 / 31.0'

Disposition of Hole	Backfilled	Monitoring Well	Other	Signature of Geologist
		✓		Brian Rhode

Location Sketch/Comments

Scale: (not to scale)

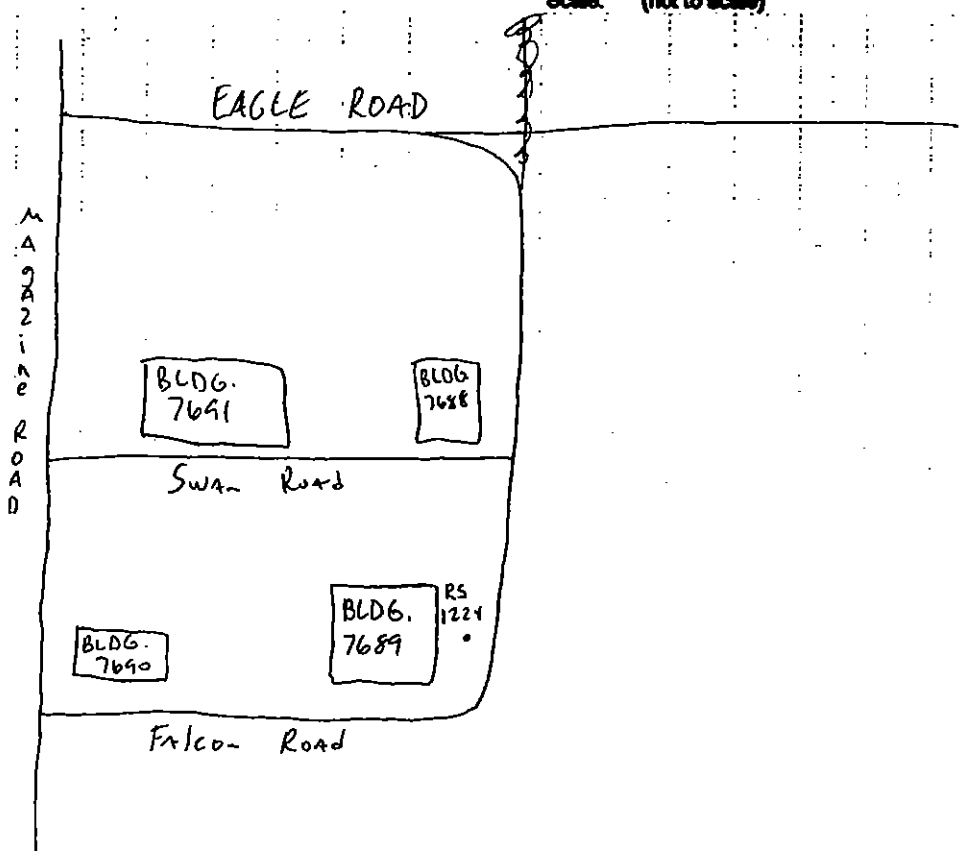

Project	Hole Number
Redstone Arsenal	OU-10-K-RS1224

K-RS1224

K-RS1224

HTRW DRILLING LOG (continuation sheet)

Hole Number: OU-10-K-RS1224

Project: Redstone Arsenal

Geologist: Brian Rhodes

Sheet 2 of 5 Sheets

Elev (ft)	Depth (ft) bgs	Description of Materials	USCS Lith	Field Screening Results (ppm)	Geotech. Sample or Core Box No.	Analytical Sample No.	Recovery (ft)	Remarks
	0	0-0.3" Asphalt			NA	NA		Begin Auger Drilling on 12-02-02
		0.3'-0.5" Gravel Backfill	Fill					Stephen Gaunthey (Driller)
		0.5'-5.0' Clay, Dusky Red (10R 3/4) soft, dry to damp, medium to high plasticity black organics abundant small chert fragments throughout		2.4 PID				Brian Rhodes (Geologist)
	1							
	2		CL/CH	4.5 PID			4.0'/5.0'	
	3							
	4							
	5	5.0'-6.0' Clay as above 6.0' Dusky Red to Yellowish Red						
	6	(6.0') 6.0'-10.0' Clay, Yellowish Red (5yr 5/8) stiff dry, low to medium plast. black organics dec. chert fragments increasing w/ depth mottled reddish yellow (5yr 6/8) light gray (10yr 7/2)	CL	5.4 PID 6.2 PID			3.5'/5.0'	
	7							
	8							
	9	N 9.0' limestone gravels						
	10							

Project: Redstone Arsenal, IT Project Number 772650

Hole Number: OU-10-K-RS1224

K-RS1224

Htrwc

K- RS1224

HTRW DRILLING LOG

(continuation sheet)

Hole Number: OU-10- K- RS 1224

Project: Redstone Arsenal

Geologist: Brian Rhodes

Sheet 3 of 5 Sheets

Elev (ft)	Depth (ft) Sub (ft)	Description of Materials	USCS/ Lith	Field Screening Results (ppm)	Geotech. Sample or Core Box No.	Analytical Sample No.	Recovery (ft)	Remarks
	10	10.0'- 15.0' Clay, Yellowish Red (5yr 5/8) stiff, dry, low plasticity			NA	NA		
	11	Abundant black organics						
		Chert and limestone gravels, fragments throughout	CL	3.4 Pid 7.1 Fid			5.0'/5.0'	
	12							
	13							
	14							
	15	15.0'- 20.0' Clay As Above						
	16			4.8 Pid 9.2 Fid			4.2'/5.0'	
	17		CL					
	18							
	19							
	20							

Project: Redstone Arsenal, IT Project Number 772650

Hole Number: OU-10-K-RS1224

K-RS1224

Hrwc

K-RS1224

HTRW DRILLING LOG

(continuation sheet)

Hole Number: OU-10-K-RS 1224

Project: Redstone Arsenal

Geologist: Brian Rhodes

Sheet 4 of 5 Sheets

Elev (ft)	Depth (ft)	Description of Materials	USCS Class	Field Screening Results (ppm)	Geotech. Sample or Core Box No.	Analytical Sample No.	Recovery (ft)	Remarks
	20	20.0'-25.0' Clay, Yellowish Red (5yr 5/8) stiff, dry, low to medium plast.			NA	NA		
	21	Abundant black organics		5.0 P.id				
		Chert + limestone throughout	CL	6.2 Fid			5.0'/5.0'	
	22							
	23							
	24							
	25	25.0'-30.0' Clay As Above						
	26							
	27		CL	4.7 P.id 5.6 Fid			4.6'/5.0'	
	28							
	29	~29.0' moist						
	30	(30.0')						30'

Project: Redstone Arsenal, IT Project Number 772650

Hole Number: OU-10-K-RS1224

K-RS1224

K-RS1224

HTRW DRILLING LOG (continuation sheet)

Hole Number: OU-10-K-RS 1224

Project: Redstone Arsenal

Geologist: Brian Rhodes

Sheet 5 of 5 Sheets

Elev. (ft)	Depth (ft)	Description of Materials	USCS Class.	Field Screening Results (ppm)	Geotech. Sample or Core Box No.	Analytical Sample No.	Recovery (ft)	Remarks
	30	30.0' - 31.0' Limestone, weathered, soft, saturated (31.0)	LS	/	NA	NA		Reach Auger Refusal At 31.0' bgs on 12-03-02 Begin 5 7/8" roller bit drilling on 12-04-02
	31	31.0' Auger Refusal 31.0' - 36.0' Limestone, Solid, unweathered						
	32							
	33		LS	N/A			N/A	
	34							
	35							Set well to 36.0' bgs on 12-04-02. 10' screen 30' riser 10 bags sand 1 bucket bentonite
	36	36.0' Bottom of Borehole & Well						
	37							
	38							
	39							
	40							

Project: Redstone Arsenal, IT Project Number 772650

Hole Number: OU-10-K-RS1224

K-RS1224

12/20/02

Monitoring Well Construction Form (Bedrock)

Project:	Redstone Arsenal	Well Number:	K-RS1224
Location:	Madison County, Huntsville, Alabama	Site Location:	RSA OU # 10
Client:	Savannah USACE	Installation Date	12-04-02
Subcontractor:	Miller Drilling	Northing:	TBD
Driller:	Stephen Gawthrey	Easting:	TBD
Shaw Field Representative:	Brian Rhodes	Shaw Project Number:	835423

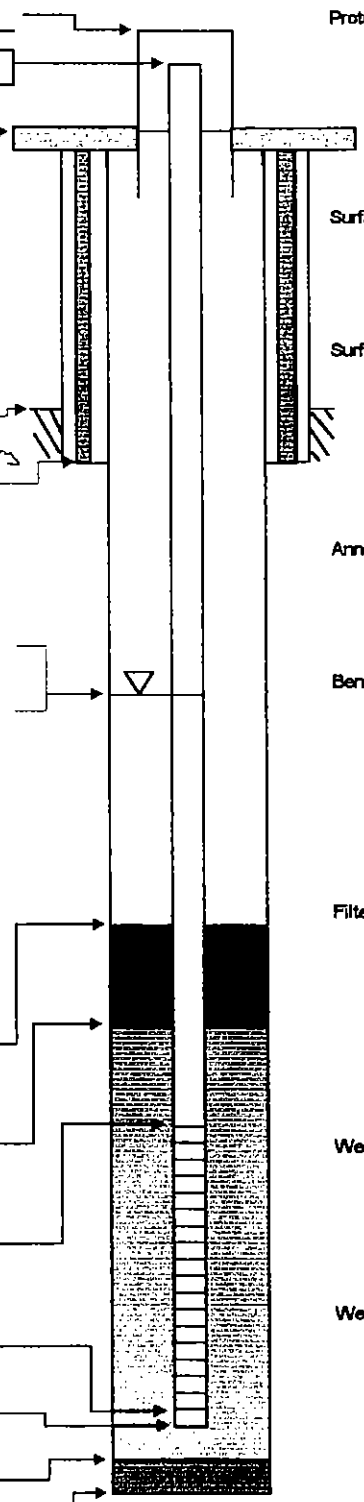

Protective Cover Elevation (ft): TBD

Top of Casing Elevation (ft): TBD

Top of Casing Stickup (ft): 0

Land Surface Elevation (ft): TBD

Approximate Diameter of Section 1 Borehole (in): 8.25"

Diameter of Surface Casing (in): 6.0"

Depth to Bedrock (ft): 31.0'

Bottom of Surface Casing (ft): ~~31.0'~~ Temporary NR

Depth to Water (ft):

During Drilling: 30.0

Date: 12-04-02

Post Development: TOC

Date:

Approximate Diameter of Section 2 Borehole (in): 5 7/8"

Well Casing Diameter (in): 2.0"

Top of Bentonite Seal (ft): 20.0'

Top of Filter Pack (ft): 23.25'

Top of Screen Interval (ft): 25.75'

Bottom of Screen Interval (ft): 35.75'

Bottom of Well (ft): 36.0'

Bottom of Filter Pack (ft): 36.0'

Bottom of Borehole (ft): 36.0'

Protective Casing:

Type: Flush Mount

Dimensions (in): ~~2'x2'~~ NA

Length (ft): —

Guard Post: NA

Surface Pad:

Dimensions: 2'x2'x3"

Type: (Concrete)

Surface Casing:

Type: Temp. PVC casing

Diameter (in): 6.0"

Installation: Tremie Haliburton Cementing Plug Other Plug

removed

Annular Space Seal:

Type: ~~Bentonite Cement Grout~~

Installation: Gravity (Tremie) Pumped

Bentonite Seal:

Manufacturer: DSI

Type: (Pellets) Slurry

Installation: 6-in lifts One Section (Gravity) Tremie Pumped

Hydration time (hrs): >24

Filter Pack Material:

Manufacturer: DSI

Product Name: Filter Sand

Size: #1 = 20/40

Volume Added (ft³): 10 bags ≈ 5 ft³

Installation: Gravity (Tremie)

Well Casing:

Manufacturer: Johnson

Type: PVC Sch. 40

Diameter (in): 2.0"

Well Screen Casing:

Manufacturer: Johnson

Type: PVC Sch. 40

Slot Size (in): .010

Slot Type: (Continous) Factory slot

Sump/End Cap: End Cap

Backfill Material: N/A

Depths and heights are referenced to ground surface unless specified TOC.

All elevations are referenced to MSL (NAVD 88).

HTRW DRILLING LOG

Company Name	Shaw Environmental, Inc.
Project	Redstone Arsenal
Name of Driller	KEVIN HEINRICH
Sizes and Types of Drilling and Sampling Equipment	8 1/4" HSA
Overburden Thickness	26.0' FEET
Depth Drilled into Rock	0' FEET
Total Depth of Hole	26.0' FEET
Client	USACE Savannah
Drilling Subcontractor	BOART LONGYEAR
Location	RSA 146
Manufacturer's Designation of Drill	D120 HSA BOART LONGYEAR ~~HSA~~ SERIE
Surface Elevation	TBD
Date Started	2-20-08
Date Completed	2-20-08
Depth Groundwater Encountered	UNKNOWN
Depth to Water and Elapsed Time After Drilling Completed	NA
Other Water Level Measurements (Specify)	NA
Hole Number	K204-RS1550
Sheet	1 of 2 Sheets

Geotechnical Samples	Disturbed	Undisturbed	Total Number of Core Boxes
NA	NA	NA	NA

Samples for Chemical Analysis	VOC	Metals	Other	Other	Other	Total Core Recovery
NA	NA	NA	NA	NA	NA	NA

Disposition of Hole	Backfilled	Monitoring Well	Other	Signature of Geologist
NA	NA	2" PERMANENT	NA	Rebecca Miller

Location Sketch/Comments:

Scale: (not to scale)

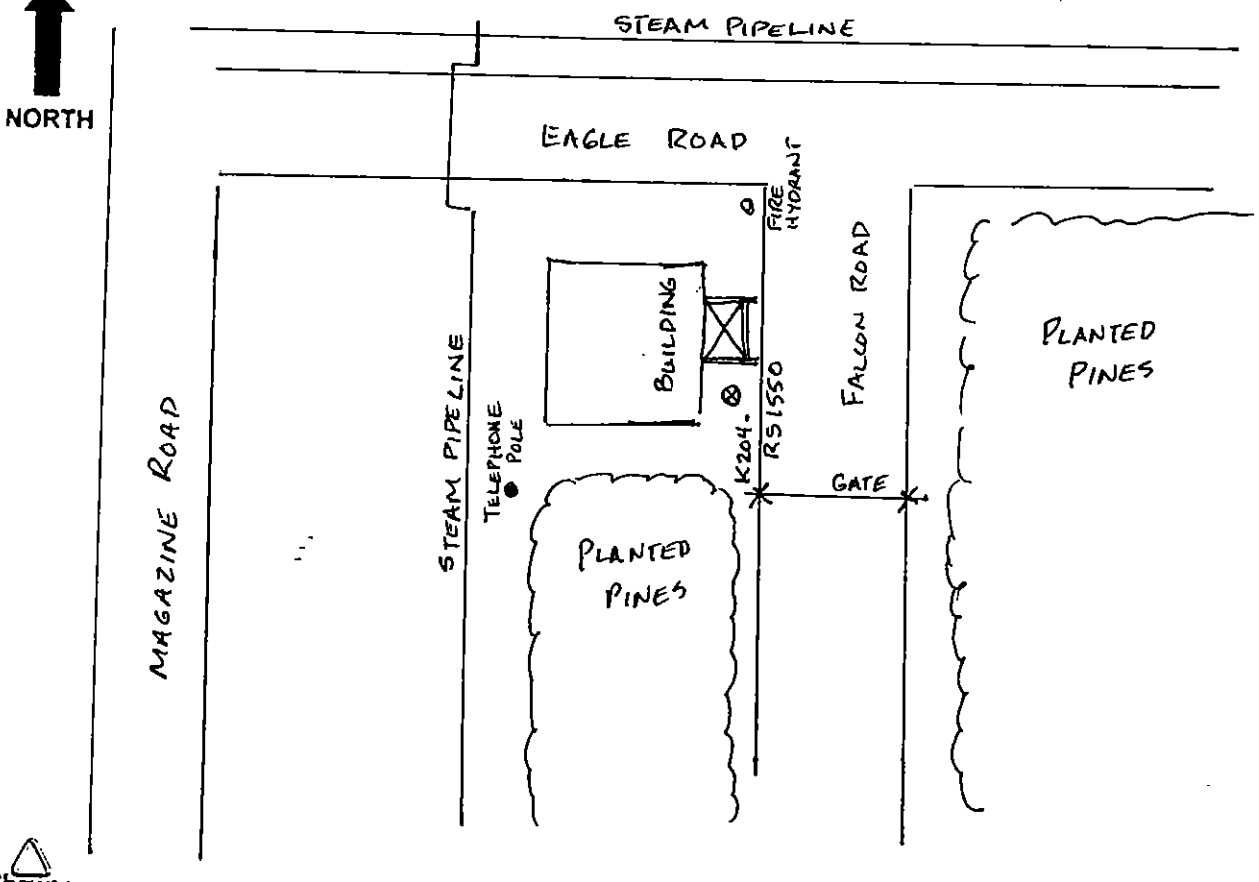

Shaw Environmental, Inc.

Project	Redstone Arsenal RSA-146	Hole Number K204-RS1550

ORIGINAL

Shaw

HTRW DRILLING LOG

(continuation sheet)

Hole Number K-RS1550

Project RSA-146

Geologist REBECCA MILLER

Sheet 2 of 2 Sheets

Elev (ft)	Depth (ft-bgs)	Description of Materials	USCS Class	Field Screening Results (ppm)	Geotech Sample or Core Box No	Analytical Sample No	Recovery (ft)	Remarks
		NO DESCRIPTION	NA	NA	NA	NA	NA	HAND AUGER 0'-5' FEET
	5							
	10							
	20	HIT REFUSAL AT 26.0' FEET BGS. TERMINATED BORING AT BEDROCK.						
	30							
	40							

Project REDSTONE ARSENAL

Hole Number K204-RS1550

Monitoring Well Construction Form

Project	RSA 146 REDSTONE ARSENAL	Well Number	K204 - RS1550
Location	HUNTSVILLE, ALABAMA	Site Location	RSA - 146
Client	SAVANNAH DISTRICT USACE	Installation Date	2-20-08
Subcontractor	BOART LONGYEAR	Northing	TBD
Driller	KEVIN HEINRICH	Easting	TBD
IT Field Representative	REBECCA MILLER	NAD TBD	NGVD TBD

Protective Cover Elevation (ft): TBD

Top of Casing Elv. (ft): TBD

Top of Casing Stickup (ft): 0'

Land Surface Elv. (ft): TBD

Approximate Diameter of Borehole (in): 8 1/4" INCHES

Well Casing Diameter (in): 2"

Depth to Water (ft):

During Drilling: UNKNOWN

Date: 2-20-08

Post Development: NA TOC

Date: NA

Top of Bentonite Seal (ft): 12.0'

Top of Filter Pack (ft): 14.0'

Top of Screen Interval (ft): 16.0'

Bottom of Screen Interval (ft): 26.0'

Bottom of Well (ft): 26.0'

Bottom of Filter Pack (ft): 26.0'

Bottom of Borehole (ft): 26.0'

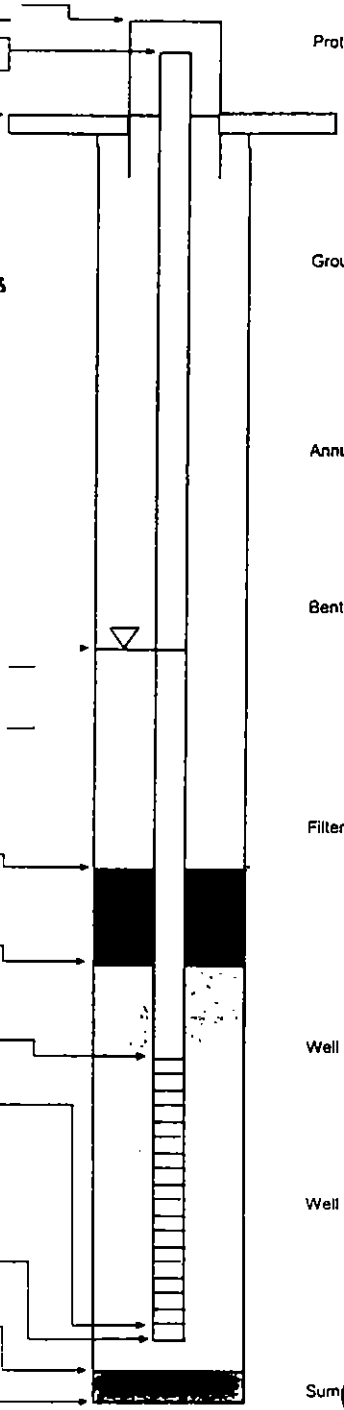

Protective Casing:

Type: Flushmount

Dimensions (in):

Length (ft): WC

Guard Post:

Ground Seal (Surface Pad)

Dimensions: 2' x 2' x 4"

Type: Concrete

Annular Space Seal:

Type: Bentonite-Cement Grout

Installation: Gravity (Tremie) Pumped

Bentonite Seal:

Manufacturer: DSI

Type: (Pellets) 3/8" Slurry

Installation: 6-in lifts One Section

(Gravity) Tremie Pumped

Hydration time (hrs): 2 hours

Filter Pack Material:

Manufacturer: DSI

Product Name: FILTER SIL

Size: 20/30

Volume Added (ft^3): 3.5 ft3

Installation: (Gravity) Tremie

Well Casing:

Manufacturer: DSI

Type: SCH 40 PVC

Diameter (in): 2"

Well Screen Casing:

Manufacturer: JOHNSON

Type: SCH 40 PVC

Slot Size (in): 0.010" ~~% Open~~

Slot Type: (Continuous wrap) Factory slot

Sump/End Cap: YES

Backfill Material: NA

Shaw
Shaw E & I, Inc.

ORIGINAL

HTRW DRILLING LOG

Client	Shaw E+I
Hole Number	204-RS2027
Company Name	GSE
Drilling Subcontractor	GSE
Sheet / Sheets	1 of 5
Project	Redstone Arsenal
Location	RSA-204
Name of Driller	Joe Tillman
Manufacturer's Designation of Drill	CME-75
Sizes and Types of Drilling and Sampling Equipment	8.25" SS Augers; air hammer; air compressor
Surface Elevation	TBD
Date Started	01-19-12
Date Completed	01-25-12
Overburden Thickness	29.70'
Depth Groundwater Encountered	TBD
Depth Drilled into Rock	5.00'
Depth to Water and Elapsed Time After Drilling Completed	NA
Total Depth of Hole	34.70' BGS
Other Water Level Measurements (Specify)	NA

Geotechnical Samples	Disturbed	Undisturbed	Total Number of Core Boxes
	NA	NA	NA

Samples for Chemical Analysis	VOC	Metals	Other	Other	Other	Total Core Recovery
	NA	NA	NA	NA	NA	—

Disposition of Hole	Backfilled	Monitoring Well	Other	Signature of Geologist
	No	Permanent	NA	

Location Sketch/Comments: Scale: (not to scale)

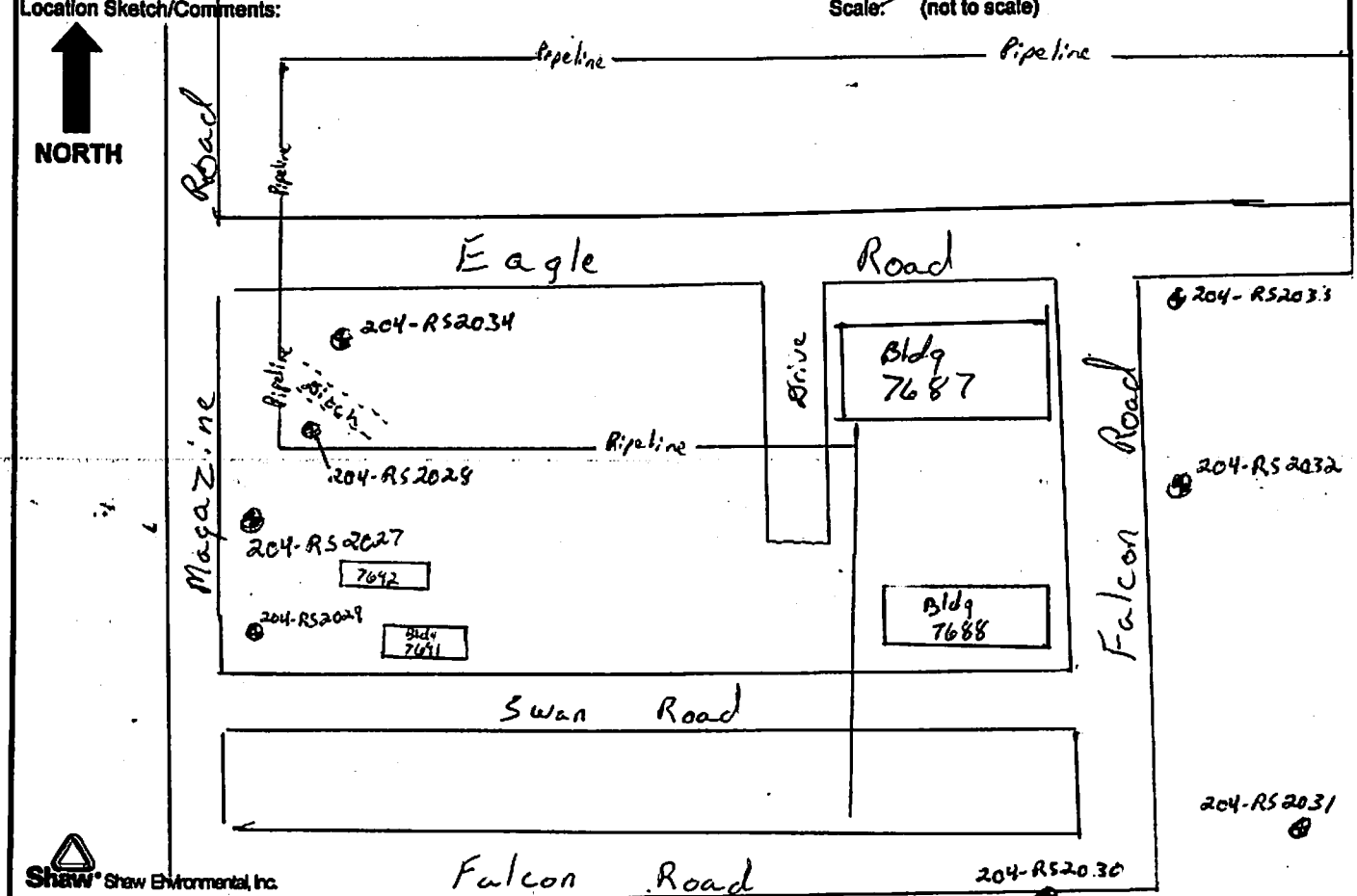

Shaw® Shaw Environmental, Inc.

Project:	Hole Number
Redstone Arsenal	204-RS2027

Shaw

HTRW DRILLING LOG

(continuation sheet)

Hole Number 204-RS2027

Project Redstone Arsenal

Geologist J. Coll

Sheet 2 of 5 Sheets

Elev (ft)	Depth (ft) bgs	Description of Materials	USCS Letter	Field Screening Results (ppm)	Geotech Sample or Core Box No	Analytical Sample No	Recovery (ft)	Remarks
N/A ↓	0	Lithology Not described No description of material		NA ↓	NA ↓	NA ↓	NA ↓	Hand augered to 5' bgs
	1							
	2							Lithology previously logged during DPT operations
	3							
	4							
	5							
	6							
	7							
	8							
	9							
	10							

Project Redstone Arsenal

Hole Number 204-RS2027

ORIGINAL

Shaw Shaw Environmental, Inc.

HTRW DRILLING LOG

(continuation sheet)

Hole Number 204-RS2027

Project Redstone Arsenal

Geologist J. Call.

Sheet 3 of 5 Sheets

Elev (ft)	Depth (ft) bgs	Description of Materials	USCS Class	Field Screening Results (ppm)	Geotech Sample or Core Box No	Analytical Sample No	Recovery (ft)	Remarks
N/A ↓	10	Lithology Not Described No Description of Material		NA ↓	NA ↓	NA ↓	NA ↓	Lithology Previously logged during DPT operations
	11							
	12							
	13							
	14							
	15							
	16							
	17							
	18							
	19							
	20							

Project Redstone Arsenal

Hole Number 204-RS2027

Shaw Environmental Inc.

HTRW DRILLING LOG

(continuation sheet)

Hole Number 204-RS2027

Project Redstone Arsenal

Geologist J. Call

Sheet 4 of 5 Sheets

Elev (ft)	Depth (ft) bgs	Description of Materials	USCS Class	Field Screening Results (ppm)	Geotech Sample or Core Box No	Analytical Sample No	Recovery (ft)	Remarks
N/A ↓	20	Lithology Not Described No Description of Material		NA ↓	NA ↓	NA ↓	NA ↓	Lithology Previously logged during DPT operations
	21							
	22							
	23							
	24							
	25							
	26							
	27							
	28							
	29							
	30	Encountered Refusal at 29.70'						

Project Redstone Arsenal

Hole Number 204-RS2027

ORIGINAL

Shaw Stone & Webster, Inc.

HTRW DRILLING LOG

(continuation sheet)

Hole Number 204-RS2027

Project Redstone Arsenal

Geologist J. Call

Sheet 5 of 5 Sheets

Elev (ft)	Depth (ft) bgs	Description of Materials	USCS Class	Field Screening Results (ppm)	Geotech Sample or Core Box No	Analytical Sample No	Recovery (ft)	Remarks
N/A ↓	30	Lithology Not Described No Description of Material		NA ↓	NA ↓	NA ↓	NA ↓	Lithology Previously logged during DPT operations
	31							
	32							
	33							
	34							Bottom of boring at 34.70'
	35	Bottom of Boring						approximately 10 gallons of water added to the boring in order to flush mud so filter sand could be added.
	36							
	37							
	38							
	39							
	40							

Project Redstone Arsenal

Hole Number 204-RS2027

ORIGINAL

Monitoring Well Construction Form

Project:	Redstone Arsenal	Well Number:	204-RS2027
Location:	Huntsville, Madison County, AL	Site Location:	RSG-204
Client:	~~USACE Savannah~~ Shaw E+I	Installation Date	01-25-12
Subcontractor:	GSE	Northing:	TBD
Driller:	Joe Tillman	Easting:	TBD
Shaw Field Representative:	Brian Rhodes	Project Number:	136973

Protective Cover Elevation (ft): TBD

Top of Casing Elv. (ft): TBD

Top of Casing Stickup (ft):

Land Surface Elv. (ft): TBD

Approximate Diameter of Borehole (in): 8.25"

Well Casing Diameter (in): 2"

Depth to Water (ft):

During Drilling: Unknown

Date: —

Post Development: TBD TOC

Date: —

Top of Bentonite Seal (ft): 20.50'

Top of Filter Pack (ft): 22.50'

Top of Screen Interval (ft): 24.30'

Bottom of Screen Interval (ft): 34.30'

Bottom of Well (ft): 34.70'

Bottom of Filter Pack (ft): 34.70'

Bottom of Borehole (ft): 34.70'

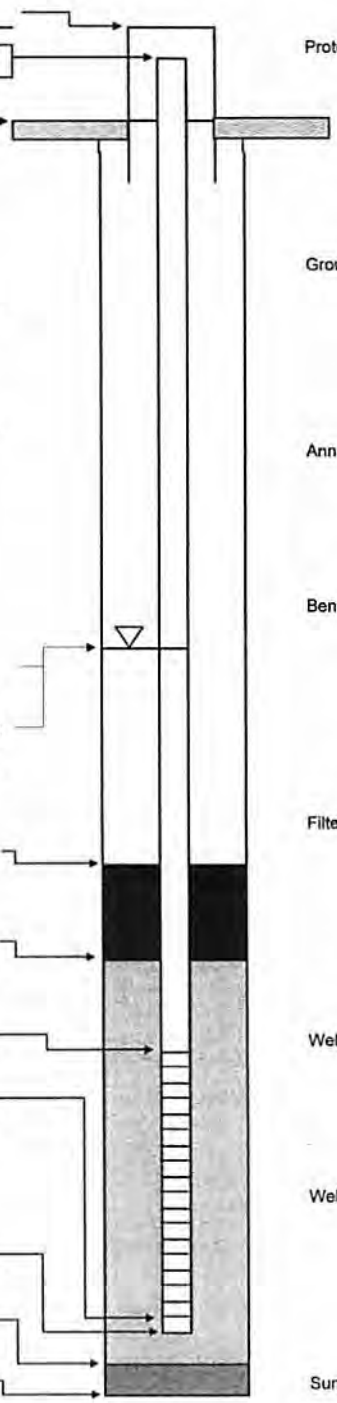

Protective Casing:

Type: aluminum

Dimensions (in): 4x4

Length (ft): 5'

Guard Post: (4) 3" posts

Ground Seal (Surface Pad)

Dimensions: 3x3x4

Type: Concrete

Annular Space Seal:

Type: Bentonite-Cement Grout

Installation: Gravity Tremie (Pumped)

Bentonite Seal:

Manufacturer: Wyo-Ben

Type: (Pellets) Slurry

Installation: 6-in lifts (One Section)

Gravity Tremie Pumped

Hydration time (hrs):

Filter Pack Material:

Manufacturer: Southern Filter Media

Product Name: Filter Media

Size: 20/40

Volume Added (ft^3):

Installation: (Gravity) Tremie

Well Casing:

Manufacturer: Monoflex

Type: sch 40 PVC

Diameter (in): 2"

Well Screen Casing:

Manufacturer: Monoflex

Type: sch 40 PVC

Slot Size (in): 0.010

Slot Type: Continuous wrap Factory slot

Sump/End Cap: 0.4" point

Backfill Material: None

Shaw

Shaw E & I, Inc.

ORIGINAL

HTRW DRILLING LOG

Client: Shaw E+I	Hole Number: 204-RS2028
Company Name: GSE	Drilling Subcontractor: GSE
	Sheet 1 of 4 Sheets
Project: Redstone Arsenal	Location: RSA-204
Name of Driller: Joe Tillman	Manufacturer's Designation of Drill: ~~CME-75~~ Geoprobe 7822
Sizes and Types of Drilling and Sampling Equipment: 8.25" SS augers, air hammer, air compressor	Surface Elevation: TBD
	Date Started: 01-24-12 / Date Completed: 1/25/12
Overburden Thickness: 23.30'	Depth Groundwater Encountered: TBD
Depth Drilled into Rock: 5.00'	Depth to Water and Elapsed Time After Drilling Completed: NA
Total Depth of Hole: 28.30' BGS	Other Water Level Measurements (Specify): NA

Geotechnical Samples	Disturbed	Undisturbed	Total Number of Core Boxes
	NA	NA	NA

Samples for Chemical Analysis	VOC	Metals	Other	Other	Other	Total Core Recovery
	NA	NA	NA	NA	NA	

Disposition of Hole	Backfilled	Monitoring Well	Other	Signature of Geologist
	NA	Permanent	NA	

Location Sketch/Comments: Scale: (not to scale)

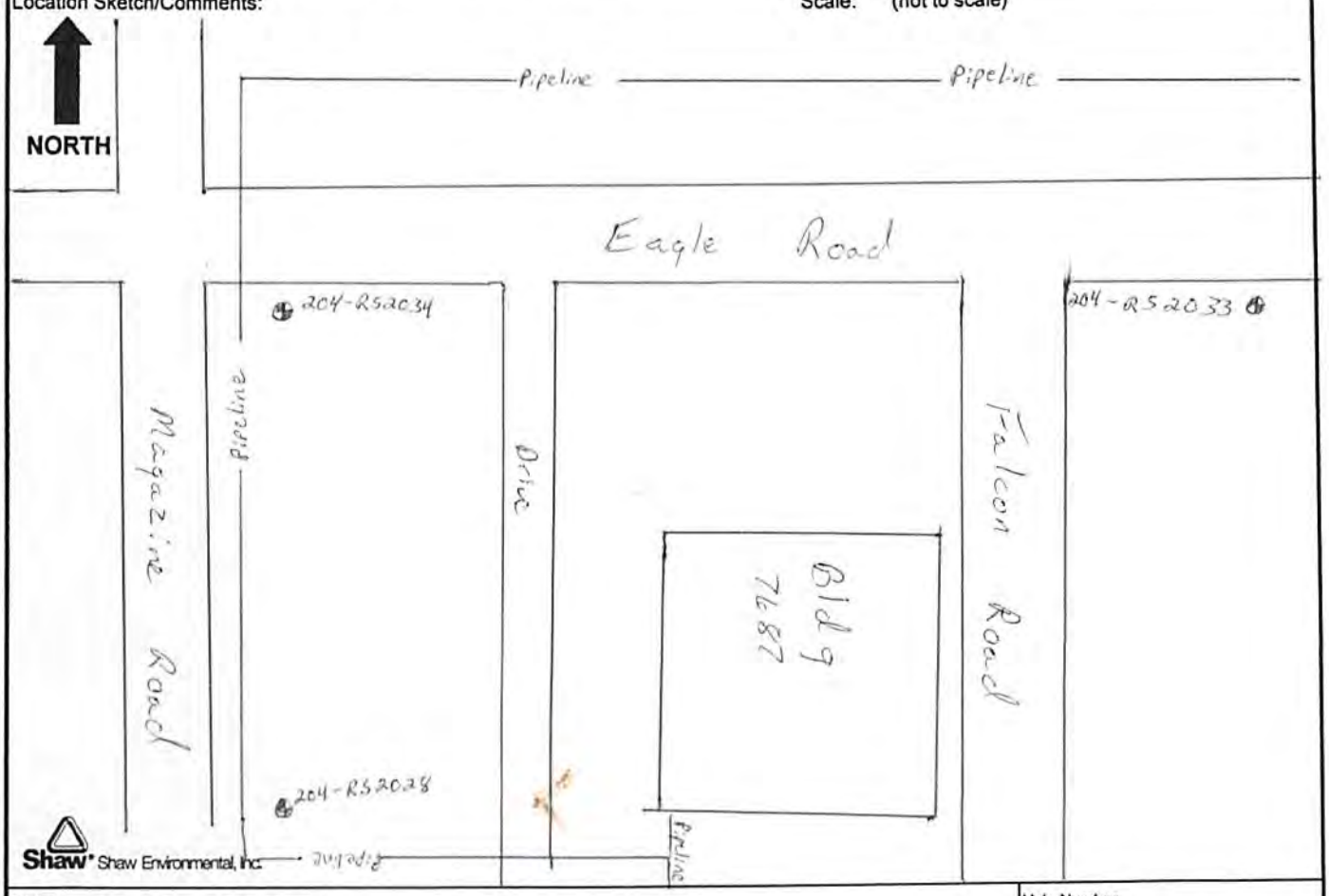

Shaw Shaw Environmental, Inc.

Project: Redstone Arsenal	Hole Number: 204-RS2028

Shaw

HTRW DRILLING LOG

(continuation sheet)

Hole Number 204-RS2028

Project Redstone Arsenal

Geologist J. Call.

Sheet 2 of 4 Sheets

Elev (ft)	Depth (ft) bgs	Description of Materials	USCS Class	Field Screening Results (ppm)	Geotech Sample or Core Box No	Analytical Sample No	Recovery (ft)	Remarks
NA ↓	0	Lithology not Described No Description of material		NA ↓	NA ↓	NA ↓	NA ↓	Hand augered to 5'
	1							Lithology Previously logged during DPT operations
	2							
	3							
	4							
	5							
	6							
	7							
	8							
	9							
	10							

Project Redstone Arsenal

Hole Number 204-RS2028

ORIGINAL

Shaw Stone & Webster, Inc.

HTRW DRILLING LOG

(continuation sheet)

Hole Number 204-RS2028

Project Redstone Arsenal

Geologist J. Call

Sheet 3 of 4 Sheets

Elev (ft)	Depth (ft) bgs	Description of Materials	USCS Class	Field Screening Results (ppm)	Geotech Sample or Core Box No	Analytical Sample No	Recovery (ft)	Remarks
N/A ↓	10	Lithology Not Described No description of material		NA ↓	NA ↓	NA ↓	NA ↓	Lithology previously logged during DPT operations
	11							
	12							
	13							
	14							
	15							
	16							
	17							
	18							
	19							
	20							

Project Redstone arsenal

Hole Number 204-RS2028

ORIGINAL

Shaw

HTRW DRILLING LOG

(continuation sheet)

Hole Number 204-RS2028

Project Redstone arsenal

Geologist J. Call

Sheet 4 of 4 Sheets

Elev (ft)	Depth (ft) bgs	Description of Materials	USCS Line	Field Screening Results (ppm)	Geotech Sample or Core Box No	Analytical Sample No	Recovery (ft)	Remarks
NA ↓	20	Lithology not Described No Description of materials		NA ↓	NA ↓	NA ↓	NA ↓	Lithology previously logged during DPT operations
	21							
	22							
	23							
		Encountered Refusal						Refusal Encountered at 23.30'
	24							
	25							
	26							
	27							
	28							
		Bottom of Boring						Bottom of boring at 28.30'
	29							
	30							

Project Redstone arsenal

Hole Number 204-RS2028

ORIGINAL

ORIGINAL

Monitoring Well Construction Form

Project:	Redstone Arsenal	Well Number:	204-RS2028
Location:	Huntsville, Madison County, AL	Site Location:	RSA-204
Client:	~~USACE Savannah~~ Shaw E + I	Installation Date	01-25-12
Subcontractor:	GSE	Northing:	TBD
Driller:	Joe Tillman	Easting:	TBD
Shaw Field Representative:	Brian Rhodes	Project Number:	136973

Protective Cover Elevation (ft): TBD

Top of Casing Elv. (ft): TBD

Top of Casing Stickup (ft):

Land Surface Elv. (ft): TBD

Approximate Diameter of Borehole (in): 8.25"

Well Casing Diameter (in): 2"

Depth to Water (ft):

During Drilling: Unknown

Date:

Post Development: TBD TOC

Date:

Top of Bentonite Seal (ft): 14.10'

Top of Filter Pack (ft): 16.10'

Top of Screen Interval (ft): 17.90'

Bottom of Screen Interval (ft): 27.90'

Bottom of Well (ft): 28.30'

Bottom of Filter Pack (ft): 28.30'

Bottom of Borehole (ft): 28.30'

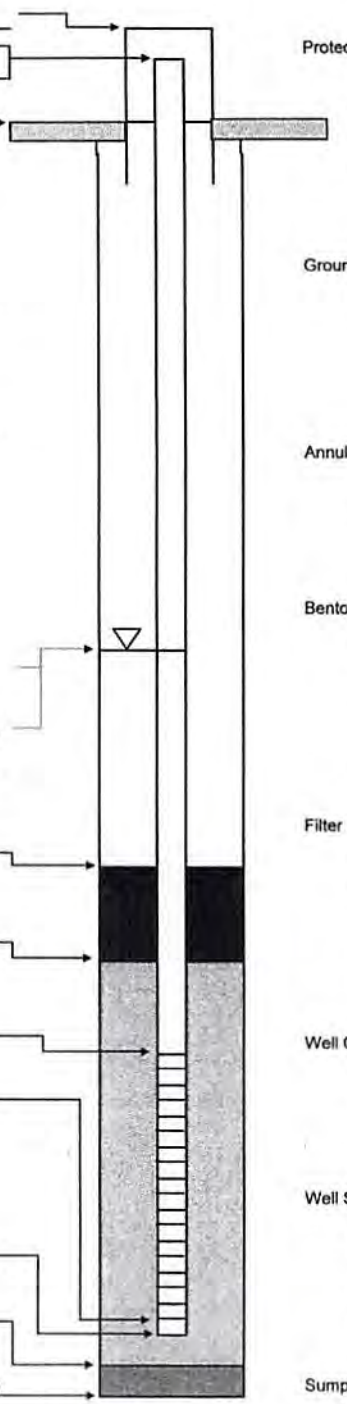

Protective Casing:

Type: aluminum

Dimensions (in): 4 x 4

Length (ft): 5'

Guard Post: (4) 3" posts

Ground Seal (Surface Pad)

Dimensions: 3x3x4

Type: Concrete

Annular Space Seal:

Type: Bentonite-Cement Grout

Installation: Gravity Tremie (Pumped)

Bentonite Seal:

Manufacturer: Wyo-Ben

Type: (Pellets) Slurry

Installation: 6-in lifts (One Section)

Gravity Tremie Pumped

Hydration time (hrs):

Filter Pack Material:

Manufacturer: Southern Filter Media

Product Name: Filter Media

Size: 20/40

Volume Added (ft^3):

Installation: Gravity Tremie

Well Casing:

Manufacturer: Monoflex

Type: sch 40 PVC

Diameter (in): 2"

Well Screen Casing:

Manufacturer: Monoflex

Type: sch 40 PVC

Slot Size (in): 0.010

Slot Type: Continuous wrap Factory slot

Sump/End Cap: 0.4" point

Backfill Material: None

Shaw

Shaw E & I, Inc.

ORIGINAL

HTRW DRILLING LOG

Client	Shaw E&I
Hole Number	204-RS2029
Company Name	GSE
Drilling Subcontractor	GSE
Sheet / Sheets	1 of 5
Project	Redstone Arsenal
Location	RSA-204
Name of Driller	Joe Tillman
Manufacturer's Designation of Drill	CME-75
Sizes and Types of Drilling and Sampling Equipment	8.25" SS Augers; air hammer; air compressor
Surface Elevation	TBD
Date Started	01-19-12
Date Completed	01-25-12
Overburden Thickness	27.15'
Depth Groundwater Encountered	TBD
Depth Drilled into Rock	5.00'
Depth to Water and Elapsed Time After Drilling Completed	NA
Total Depth of Hole	32.15' BGS
Other Water Level Measurements (Specify)	NA

Geotechnical Samples	Disturbed	Undisturbed	Total Number of Core Boxes
	NA	NA	NA

Samples for Chemical Analysis	VOC	Metals	Other	Other	Other	Total Core Recovery
	NA	NA	NA	NA	NA	—

Disposition of Hole	Backfilled	Monitoring Well	Other	Signature of Geologist
	No	Permanent	NA	

Location Sketch/Comments: Scale: (not to scale)

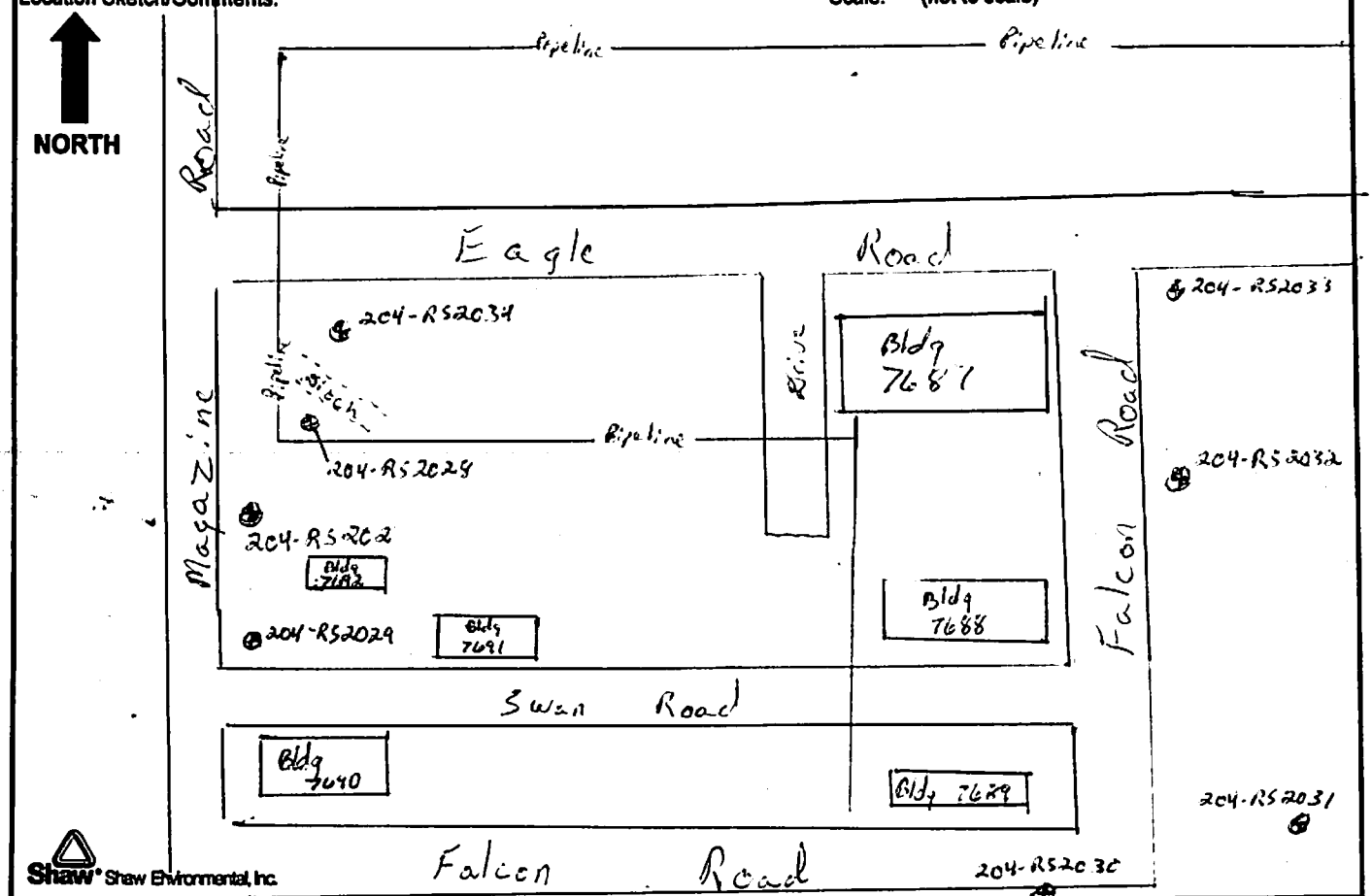

Shaw® Shaw Environmental, Inc.

Project:	Hole Number
Redstone Arsenal	204-RS2029

Shaw Environmental Inc.

HTRW DRILLING LOG

(continuation sheet)

Hole Number 204-RS2024

Project Redstone Arsenal

Logged J. Call

Sheet 2 of 5 Sheets

Elev (ft)	Depth (ft) bgs	Description of Materials	USCS Class	Field Screening Results (ppm)	Geotech Sample or Core Box No	Analytical Sample No	Recovery (ft)	Remarks
NA ↓	0	Lithology Not Described No Description of Material		NA ↓	NA ↓	NA ↓	NA ↓	Lithology Previously logged during GPT operations. Hand augered to 5'
	1							
	2							
	3							
	4							
	5							
	6							
	7							
	8							
	9							
	10							

Project Redstone Arsenal

Hole Number 204-RS2024

ORIGINAL

Shaw: Team Discovered by.

HTRW DRILLING LOG

(continuation sheet)

Hole Number 204-RS2029

Project Redstone Arsenal

Geologist J. Call

Sheet 3 of 5 Sheets

Elev (ft)	Depth (ft) bgs	Description of Materials	USCS Class	Field Screening Results (ppm)	Geotech Sample or Core Box No	Analytical Sample No	Recovery (ft)	Remarks
N/A ↓	10	Lithology Not Described No description of Material		N/A ↓	N/A ↓	N/A ↓	N/A ↓	Lithology Previously logged during CPT Operations
	11							
	12							
	13							
	14							
	15							
	16							
	17							
	18							
	19							
	20							

Project Redstone Arsenal

Hole Number 204-RS2029

ORIGINAL

Shaw Environmental Inc.

HTRW DRILLING LOG

(continuation sheet)

Hole Number 204-RS2029

Project Redstone arsenal

Geologist J. Call

Sheet 4 of 5 Sheets

Elev (ft)	Depth (ft) bgs	Description of Materials	USCS Class	Field Screening Results (ppm)	Geotech Sample or Core Box No	Analytical Sample No	Recovery (ft)	Remarks
NA	20	Lithology Not described No description of materials		NA ↓	NA ↓	NA ↓	NA ↓	Lithology previously logged during HPT operations
	21							
	22							
	23							
	24							
	25							
	26							
	27	Encountered Refusal						
	28							
	29							
	30							

Project Redstone Arsenal

Hole Number 204-RS2029

ORIGINAL

HTRW DRILLING LOG

(continuation sheet)

Hole Number 204-RS2029

Project Redstone Arsenal

Geologist J. Call

Sheet 5 of 5 Sheets

Elev (ft)	Depth (ft) bgs	Description of Materials	USCS Class	Field Screening Results (ppm)	Geotech Sample or Core Box No	Analytical Sample No	Recovery (ft)	Remarks
N/A ↓	30	Lithology Not Described No Description of Materials		NA ↓	NA ↓	NA ↓	NA ↓	Lithology previously logged during DPT operations.
	31							
	32							
		End of Boring @ 32.15' BGS						
	33							
	34							
	35							
	36							
	37							
	38							
	39							
	40							

Project Redstone Arsenal

Hole Number 204-RS2029

ORIGINAL

ORIGINAL

Monitoring Well Construction Form

Project:	Redstone Arsenal	Well Number:	204-RS2029
Location:	Huntsville, Madison County, AL	Site Location:	RSA-204
Client:	~~USACE-Savannah~~ Shaw E+I	Installation Date	01-25-12
Subcontractor:	GSE	Northing:	TBD
Driller:	Joe Tillman	Easting:	TBD
Shaw Field Representative:	Brian Rhodes	Project Number:	136973

Protective Cover Elevation (ft): TBD

Top of Casing Elv. (ft): TBD

Top of Casing Stickup (ft):

Land Surface Elv. (ft): TBD

Approximate Diameter of Borehole (in): 8.25"

Well Casing Diameter (in): 2"

Depth to Water (ft):

During Drilling: Unknown

Date: —

Post Development: TBD TOC

Date: —

Top of Bentonite Seal (ft): 17.70'

Top of Filter Pack (ft): 19.40'

Top of Screen Interval (ft): 21.75'

Bottom of Screen Interval (ft): 31.75'

Bottom of Well (ft): 32.15'

Bottom of Filter Pack (ft): 32.15'

Bottom of Borehole (ft): 32.15'

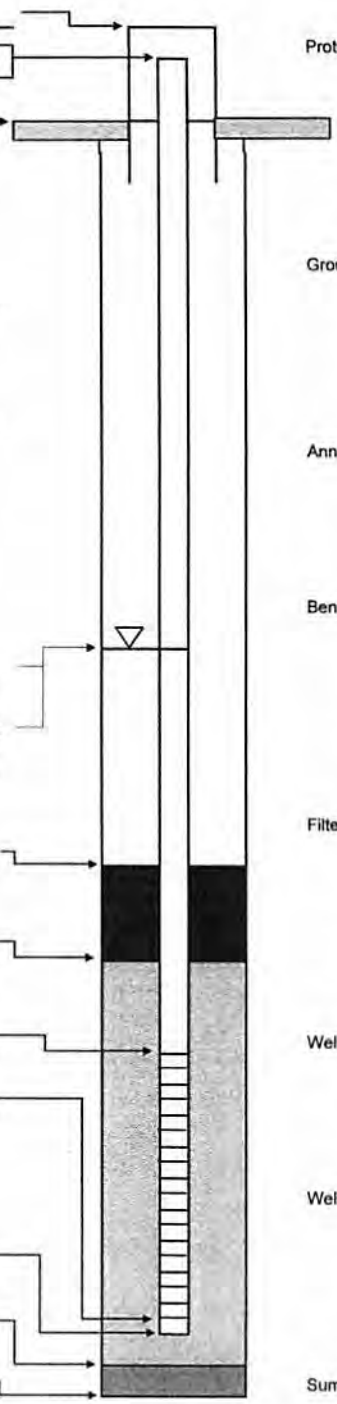

Protective Casing:

Type: aluminum

Dimensions (in): 4x4

Length (ft): 5'

Guard Post: (4) 5" posts

Ground Seal (Surface Pad)

Dimensions: 3x3x4

Type: Concrete

Annular Space Seal:

Type: Bentonite-Cement Grout

Installation: Gravity Tremie (Pumped)

Bentonite Seal:

Manufacturer: Wyo-Ben

Type: (Pellets) Slurry

Installation: 6-in lifts (One Section)

Gravity Tremie Pumped

Hydration time (hrs):

Filter Pack Material:

Manufacturer: Southern Filter Media

Product Name: Filter Media

Size: 20/40

Volume Added (ft^3):

Installation: (Gravity) Tremie

Well Casing:

Manufacturer: Monoflex

Type: sch 40 PVC

Diameter (in): 2"

Well Screen Casing:

Manufacturer: Monoflex

Type: sch 40 PVC

Slot Size (in): 0.010

Slot Type: Continuous wrap Factory slot

Sump/End Cap: 0.4' point

Backfill Material: None

Shaw™

Shaw E & I, Inc.

ORIGINAL

HTRW DRILLING LOG

Client	Shaw E+I
Hole Number	204-RS2030
Company Name	GSE
Drilling Subcontractor	GSE
Sheet / Sheets	1 of 4
Project	Redstone Arsenal
Location	RSA-204
Name of Driller	Joe Tillman
Manufacturer's Designation of Drill	CME-75
Sizes and Types of Drilling and Sampling Equipment	8.25" SS Augers; air hammer; air compressor
Surface Elevation	TBD
Date Started	01-20-12
Date Completed	01-25-12
Overburden Thickness	19.20'
Depth Groundwater Encountered	TBD
Depth Drilled Into Rock	5.00'
Depth to Water and Elapsed Time After Drilling Completed	NA
Total Depth of Hole	24.20' BGS
Other Water Level Measurements (Specify)	NA

Geotechnical Samples	Disturbed	Undisturbed	Total Number of Core Boxes
	NA	NA	NA

Samples for Chemical Analysis	VOC	Metals	Other	Other	Other	Total Core Recovery
	NA	NA	NA	NA	NA	—

Disposition of Hole	Backfilled	Monitoring Well	Other	Signature of Geologist
	No	Permanent	NA	[illegible]

Location Sketch/Comments: Scale: (not to scale)

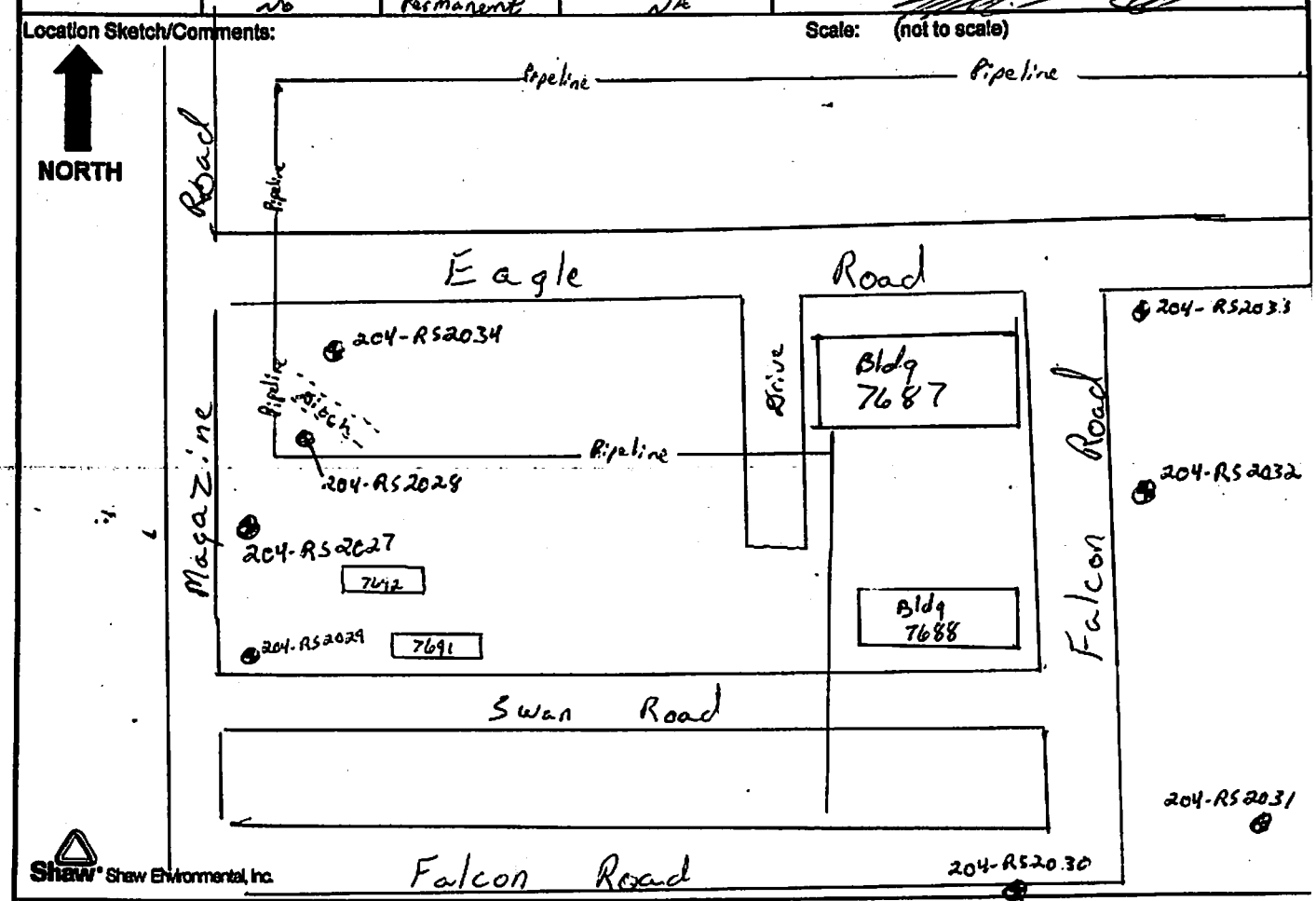

Shaw® Shaw Environmental, Inc.

Project:	Hole Number
Redstone Arsenal	204-RS2030

Shaw Stone & Webster, Inc.

HTRW DRILLING LOG

(continuation sheet)

Hole Number 204-RS2030

Project Redstone Arsenal

Geologist J. Call

Sheet 2 of 4 Sheets

Elev (ft)	Depth (ft) bgs	Description of Materials	USCS Class	Field Screening Results (ppm)	Geotech Sample or Core Box No	Analytical Sample No	Recovery (ft)	Remarks
NA ↓	0	Lithology Not Described		NA ↓	NA ↓	NA ↓	NA ↓	Hand augered 5' bgs
		No Description of Material						
	1							Lithology previously logged during DPT operations
	2							
	3							
	4							
	5							
	6							
	7							
	8							
	9							
	10							

Project Redstone Arsenal

Hole Number 204-RS2030

ORIGINAL

Shaw (Now Performance Tech.)

HTRW DRILLING LOG

(continuation sheet)

Hole Number 204-RS2030

Project Redstone arsenal

Geologist J. Call

Sheet 3 of 4 Sheets

Elev (ft)	Depth (ft) bgs	Description of Materials	USCS Class	Field Screening Results (ppm)	Geotech Sample or Core Box No	Analytical Sample No	Recovery (ft)	Remarks
N/A ↓	10	Lithology Not described		NA ↓	NA ↓	NA ↓	NA ↓	Lithology previously logged during DPT operations.
	11	No Description of material						
	12							
	13							
	14							
	15							
	16							
	17							
	18							
	19	Encountered Refusal						Encountered refusal at 19.20'
	20							

Project Redstone arsenal

Hole Number 204-RS2030

ORIGINAL

Shaw

HTRW DRILLING LOG

(continuation sheet)

Hole Number 204-RS2030

Project Redstone arsenal

Geologist J. Call

Sheet 4 of 4 Sheets

Elev (ft)	Depth (ft) bgs	Description of Materials	USCS Class	Field Screening Results (ppm)	Geotech Sample or Core Box No	Analytical Sample No	Recovery (ft)	Remarks
N/A ↓	20	Lithology Not described		NA ↓	NA ↓	NA ↓	NA ↓	Lithology Previously logged during DPT operations.
	21	No description of Material						
	22							
	23							
	24							
	25	Bottom of Boring						Bottom of boring is 24.20' BGS
	26							
	27							
	28							
	29							
	30							

Project Redstone arsenal

Hole Number 204-RS2030

ORIGINAL

ORIGINAL

Monitoring Well Construction Form

Project:	Redstone Arsenal	Well Number:	204-RS2030
Location:	Huntsville, Madison County, AL	Site Location:	RSA-204
Client:	~~USACE Savannah~~ Shaw E&I	Installation Date	01-25-12
Subcontractor:	GSE	Northing:	TBD
Driller:	Joe Tillman	Easting:	TBD
Shaw Field Representative:	Brian Yarbough	Project Number:	136973

Protective Cover Elevation (ft): TBD

Top of Casing Elv. (ft): TBD

Top of Casing Stickup (ft):

Land Surface Elv. (ft): TBD

Approximate Diameter of Borehole (in): 8.25"

Well Casing Diameter (in): 2"

Depth to Water (ft):

During Drilling: Unknown

Date: —

Post Development: TBD TOC

Date: —

Top of Bentonite Seal (ft): 9.80'

Top of Filter Pack (ft): 11.80'

Top of Screen Interval (ft): 13.80'

Bottom of Screen Interval (ft): 23.80'

Bottom of Well (ft): 24.20'

Bottom of Filter Pack (ft): 24.20'

Bottom of Borehole (ft): 24.20'

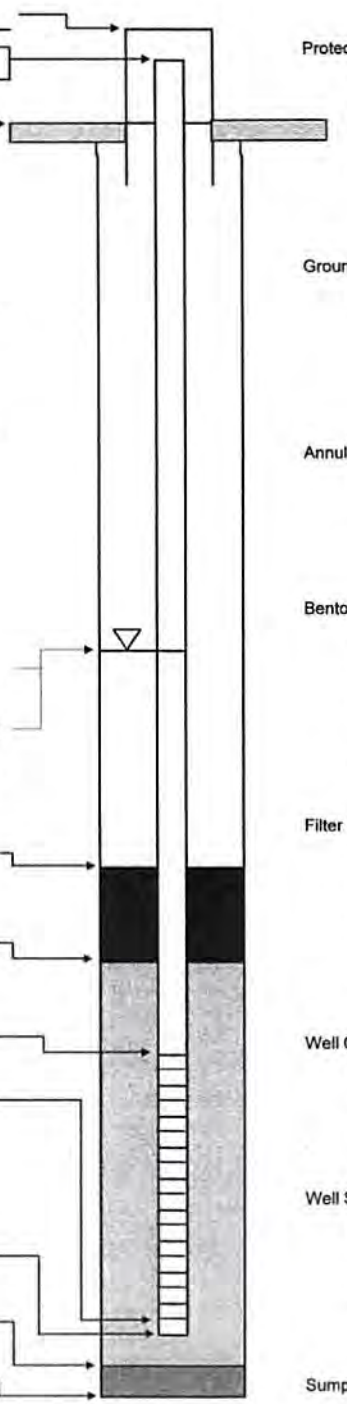

Protective Casing:

Type: aluminum

Dimensions (in): 4x4

Length (ft): 5'

Guard Post: (4) 3" Posts

Ground Seal (Surface Pad)

Dimensions: 3x3x4

Type: Concrete

Annular Space Seal:

Type: Bentonite-Cement Grout

Installation: Gravity Tremie (Pumped)

Bentonite Seal:

Manufacturer: Wyo-Ben

Type: (Pellets) Slurry

Installation: 6-in lifts (One Section)

Gravity Tremie Pumped

Hydration time (hrs):

Filter Pack Material:

Manufacturer: Southern Filter Media

Product Name: Filter Media

Size: 20/40

Volume Added (ft^3):

Installation: (Gravity) Tremie

Well Casing:

Manufacturer: Monoflex

Type: Sch 40 PVC

Diameter (in): 2"

Well Screen Casing:

Manufacturer: Monoflex

Type: Sch 40 PVC

Slot Size (in): 0.010

Slot Type: Continuous wrap Factory slot

Sump/End Cap: 0.4" Point

Backfill Material: None

Shaw

Shaw E & I, Inc.

ORIGINAL

HTRW DRILLING LOG

Company Name	GSE	Client	Shaw E+I
Hole Number	204-RS2031	Sheet 1 of 4 Sheets	
Drilling Subcontractor	GSE.		
Project	Redstone Arsenal	Location	RSA-204
Name of Driller	Joe Tillman	Manufacturer's Designation of Drill	~~CME-75~~ Geoprobe 7822
Sizes and Types of Drilling and Sampling Equipment	8.25" SS Augers; air hammer; air compressor	Surface Elevation	TBD
		Date Started	01-23-12
		Date Completed	1/25/12
Overburden Thickness	20.70'	Depth Groundwater Encountered	TBD
Depth Drilled into Rock	5.00'	Depth to Water and Elapsed Time After Drilling Completed	NA
Total Depth of Hole	25.70' BGS	Other Water Level Measurements (Specify)	NA

Geotechnical Samples	Disturbed	Undisturbed	Total Number of Core Boxes
	NA	NA	NA

Samples for Chemical Analysis	VOC	Metals	Other	Other	Other	Total Core Recovery
	NA	NA	NA	NA	NA	

Disposition of Hole	Backfilled	Monitoring Well	Other	Signature of Geologist
	No	Permanent	NA	

Location Sketch/Comments: Scale: (not to scale)

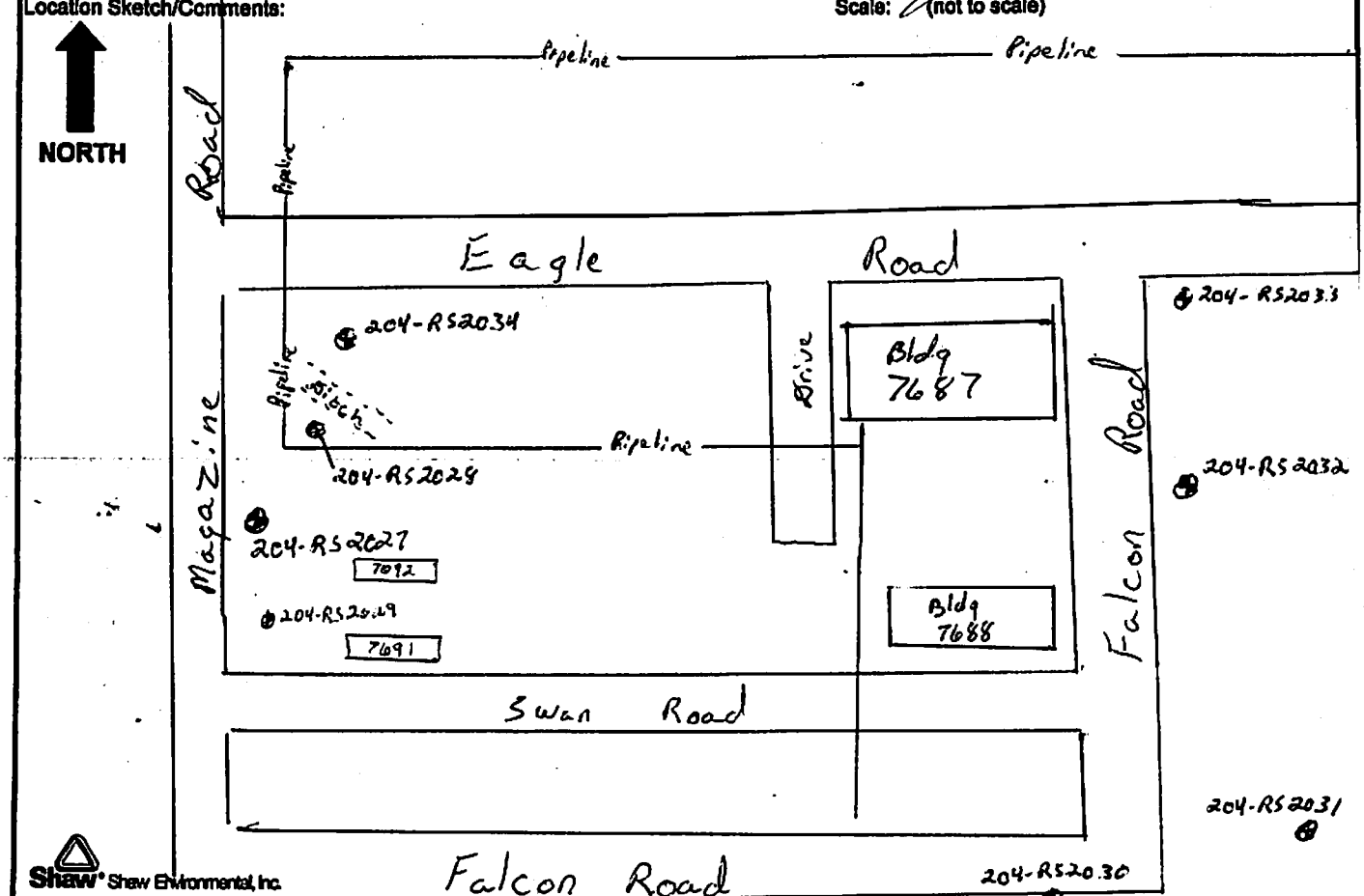

Shaw® Shaw Environmental, Inc.

Project:	Redstone Arsenal	Hole Number	204-RS2031

Shaw Shaw Environmental Inc.

HTRW DRILLING LOG

(continuation sheet)

Hole Number 204-RS2031

Project Redstone Arsenal

Geologist J. Call

Sheet 2 of 4 Sheets

Elev (ft)	Depth (ft) bgs	Description of Materials	USCS Units	Field Screening Results (ppm)	Geotech Sample or Core Box No	Analytical Sample No	Recovery (ft)	Remarks
NA	0	Lithology Not Described No Description of material		NA ↓	NA ↓	NA ↓	NA ↓	Hand augered to 5' bgs
	1							Lithology previously logged during DPT operations
	2							
	3							
	4							
	5							
	6							
	7							
	8							
	9							
	10							

Project Redstone Arsenal

Hole Number 204-RS2031

ORIGINAL

Shaw Shaw Environmental, Inc.

HTRW DRILLING LOG

(continuation sheet)

Hole Number 204-RS2031

Project Redstone Arsenal

Contractor J. Call.

Sheet 3 of 4 Sheets

Elev (ft)	Depth (ft) bgs	Description of Materials	USCS Class	Field Screening Results (ppm)	Geotech Sample or Core Box No	Analytical Sample No	Recovery (ft)	Remarks
NA ↓	10	Lithology Not Described		NA ↓	NA ↓	NA ↓	NA ↓	Lithology previously logged during DPT operations
	11	No Description of Material						
	12							
	13							
	14							
	15							
	16							
	17							
	18							
	19							
	20							

Project Redstone Arsenal

Hole Number 204 RS2031

Shaw Shaw Environmental Inc.

HTRW DRILLING LOG

(continuation sheet)

Hole Number 204-RS2031

Project Redstone Arsenal

Geologist J. Cull

Sheet 4 of 4 Sheets

Elev (ft)	Depth (ft) bgs	Description of Materials	USCS Class	Field Screening Results (ppm)	Geotech Sample or Core Box No	Analytical Sample No	Recovery (ft)	Remarks
N/A	20	Lithology Not Described No Description of Material		NA	NA	NA	NA	Lithology previously logged during SPT operations
	21	Encountered Refusal (20.70')						Encountered refusal at 20.70'
	22							
	23							
	24							
	25							
	26	Bottom of Bore Hole 25.70' BGS						
	27							
	28							
	29							
	30							

Project Redstone Arsenal

Hole Number 204-RS2031

ORIGINAL

ORIGINAL

Monitoring Well Construction Form

Project:	Redstone Arsenal	Well Number:	204-RS2031
Location:	Huntsville, Madison County, AL	Site Location:	RSA 204
Client:	USACE Savannah Shaw E&I	Installation Date	01-25-12
Subcontractor:	GSE	Northing:	TBD
Driller:	Joe Tillman	Easting:	TBD
Shaw Field Representative:	B. Rhodes	Project Number:	136473

Protective Cover Elevation (ft): TBD

Top of Casing Elv. (ft): TBD

Top of Casing Stickup (ft):

Land Surface Elv. (ft): TBD

Approximate Diameter of Borehole (in): 8.25"

Well Casing Diameter (in): 2"

Depth to Water (ft):

During Drilling: Unknown

Date:

Post Development: TBR TOC

Date:

Top of Bentonite Seal (ft): 10.90'

Top of Filter Pack (ft): 12.90'

Top of Screen Interval (ft): 15.30'

Bottom of Screen Interval (ft): 25.30'

Bottom of Well (ft): 25.70

Bottom of Filter Pack (ft): 25.70'

Bottom of Borehole (ft): 25.70'

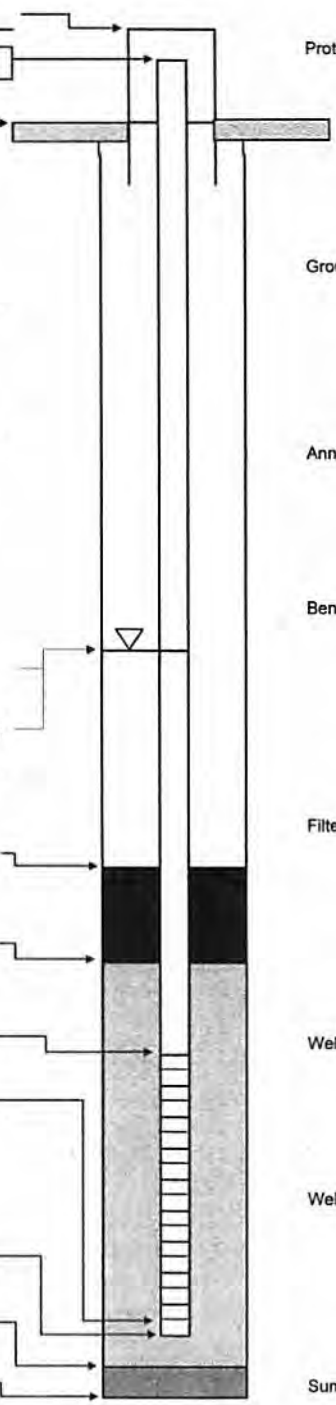

Protective Casing:

Type: Aluminum

Dimensions (in): 4x4

Length (ft): 5'

Guard Post: (4) 3" Posts

Ground Seal (Surface Pad)

Dimensions: 3x3x4

Type: Concrete

Annular Space Seal:

Type: Bentonite-Cement Grout

Installation: Gravity Tremie Pumped

Bentonite Seal:

Manufacturer: Wyo-Ben

Type: Pellets Slurry

Installation: 6-in lifts One Section

Gravity Tremie Pumped

Hydration time (hrs):

Filter Pack Material:

Manufacturer: Southern Filter Media

Product Name: Filter Media

Size: 20/40

Volume Added (ft^3):

Installation: Gravity Tremie

Well Casing:

Manufacturer: Mountflex

Type: sch 40 PVC

Diameter (in): 2"

Well Screen Casing:

Manufacturer: Mountflex

Type: sch 40 PVC

Slot Size (in): 0.010

Slot Type: Continuous wrap Factory slot

Sump/End Cap: 0.4' point

Backfill Material: None

Shaw™

Shaw E & I, Inc.

ORIGINAL

HTRW DRILLING LOG

Client: Shaw E+I	Hole Number: 204-RS2032
Company Name: GSE	Drilling Subcontractor: GSE
Sheet 1 of 5 Sheets	
Project: Redstone Arsenal	Location: RSA-204
Name of Driller: Joe Tillman	Manufacturer's Designation of Drill: CME-75
Sizes and Types of Drilling and Sampling Equipment: 8.25" SS Augers, Air Hammer, Air Compressor	Surface Elevation: TBD
	Date Started: 01-18-12 / Date Completed: 01-25-12
Overburden Thickness: 27.50'	Depth Groundwater Encountered: TBD
Depth Drilled into Rock: 5.00'	Depth to Water and Elapsed Time After Drilling Completed: NA
Total Depth of Hole: 32.50' BGS	Other Water Level Measurements (Specify): NA

Geotechnical Samples	Disturbed	Undisturbed	Total Number of Core Boxes
	NA	NA	NA

Samples for Chemical Analysis	VOC	Metals	Other	Other	Other	Total Core Recovery
	NA	NA	NA	NA	NA	—

Disposition of Hole	Backfilled	Monitoring Well	Other	Signature of Geologist
	No	Permanent	NA	

Location Sketch/Comments: Scale: (not to scale)

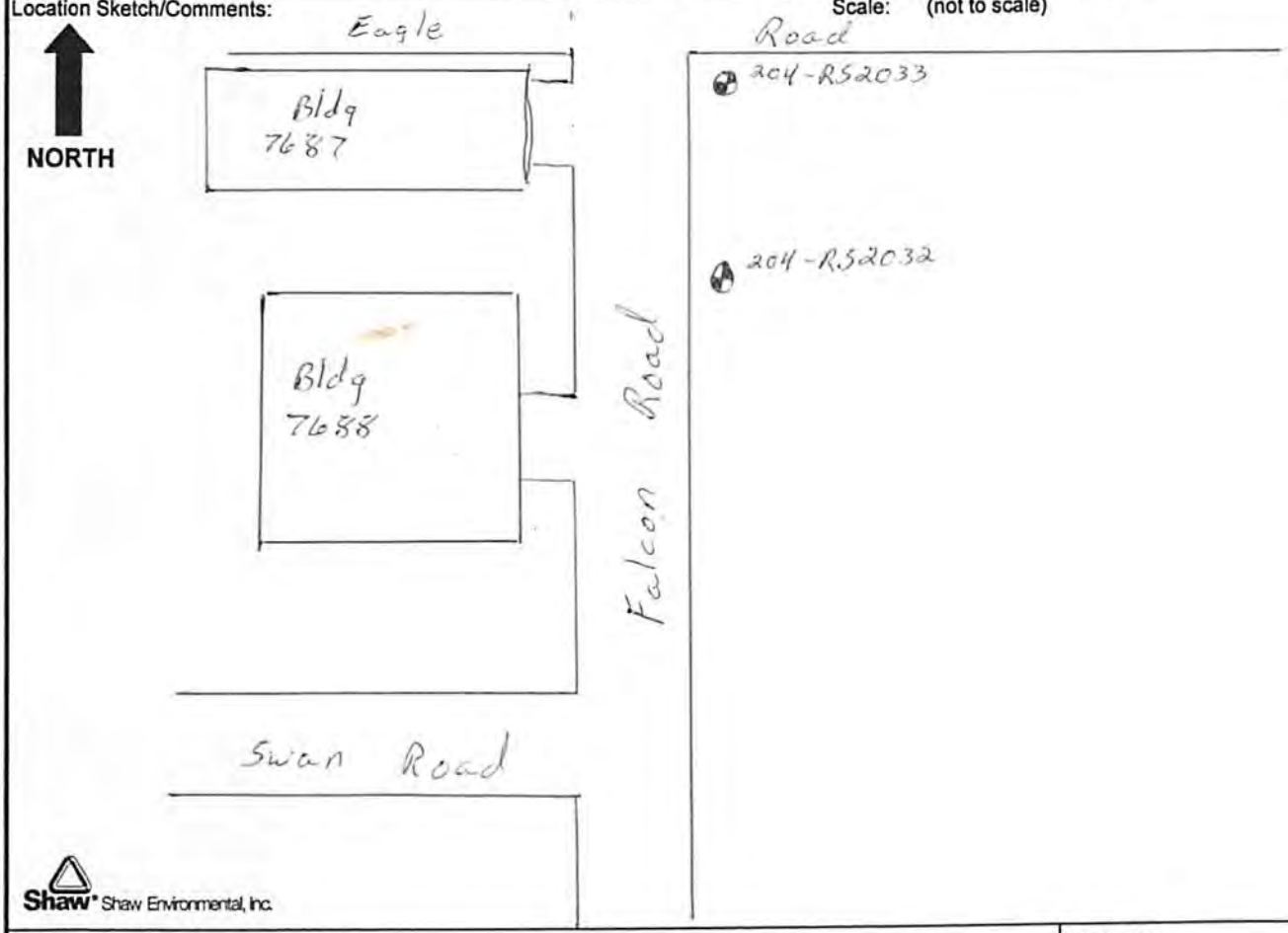

Shaw® Shaw Environmental, Inc.

Project: Redstone Arsenal	Hole Number: 204-RS2032

Shaw Environmental Inc.

HTRW DRILLING LOG

(continuation sheet)

Hole Number 204-RS2032

Project Redstone Arsenal

Geologist J. Call

Sheet 2 of 5 Sheets

Elev (ft)	Depth (ft) bgs	Description of Materials	USCS Class	Field Screening Results (ppm)	Geotech Sample or Core Box No	Analytical Sample No	Recovery (ft)	Remarks
NA ↓	0	Lithology Not Described No Description of Material		NA ↓	NA ↓	NA ↓	NA ↓	Hand augered to 5'
	1							
	2							Lithology Previously logged during DPT Operations.
	3							
	4							
	5							
	6							
	7							
	8							
	9							
	10							

Project Redstone Arsenal

Hole Number 204-RS2032

ORIGINAL

Shaw

HTRW DRILLING LOG

(continuation sheet)

Hole Number 204-RS2032

Project Redstone Arsenal

Geologist J. Call

Sheet 3 of 5 Sheets

Elev (ft)	Depth (ft) bgs	Description of Materials	USCS Class	Field Screening Results (ppm)	Geotech Sample or Core Box No	Analytical Sample No	Recovery (ft)	Remarks
NA ↓	10	Lithology not described No description of material		NA ↓	NA ↓	NA ↓	NA ↓	Lithology Previously logged during DPT operations
	11							
	12							
	13							
	14							
	15							
	16							
	17							
	18							
	19							
	20							

Project Redstone Arsenal

Hole Number 204-RS2032

ORIGINAL

Shaw Shaw Environmental, Inc.

HTRW DRILLING LOG

(continuation sheet)

Hole Number 204-RS2032

Project Redstone Arsenal

Geologist J. Cell

Sheet 4 of 5 Sheets

Elev (ft)	Depth (ft) bgs	Description of Materials	USCS Class	Field Screening Results (ppm)	Geotech Sample or Core Box No	Analytical Sample No	Recovery (ft)	Remarks
NA ↓	20	Lithology Not Described No Description of Materials		NA ↓	NA ↓	NA ↓	NA ↓	Lithology previously logged during DPT Operations,
	21							
	22							
	23							
	24							
	25							
	26							
	27							
		Encountered Refusal						Encountered Refusal at 27.50'
	28							
	29							
	30							

Project Redstone Arsenal

Hole Number 204-RS2032

ORIGINAL

HTRW DRILLING LOG

(continuation sheet)

Hole Number 204-RS2032

Project Redstone Arsenal

Geologist J. Call

Sheet 5 of 5 Sheets

Elev (ft)	Depth (ft) bgs	Description of Materials	USCS Class	Field Screening Results (ppm)	Geotech Sample or Core Box No	Analytical Sample No	Recovery (ft)	Remarks
NA ↓	30	Lithology not Described No Description of material		NA ↓	NA ↓	NA ↓	NA ↓	Lithology previously Logged by DPT operations.
	31							
	32							
		END of Boring						Bottom of Boring at 32.50'
	33							
	34							
	35							
	36							
	37							
	38							
	39							
	40							

Project Redstone Arsenal

Hole Number 204-RS2032

Monitoring Well Construction Form

Project:	Redstone Arsenal	Well Number:	204-RS2032
Location:	Huntsville, Madison County, AL	Site Location:	RSA-204
Client:	USACE ~~Savannah~~ Shaw E+I	Installation Date	01-25-12
Subcontractor:	GSE	Northing:	TBD
Driller:	Joe Tillman	Easting:	TBD
Shaw Field Representative:	Brian Rhodes	Project Number:	136973

ORIGINAL

Protective Cover Elevation (ft): TBD

Top of Casing Elv. (ft): TBD

Top of Casing Stickup (ft): 2.5'

Land Surface Elv. (ft): TBD

Approximate Diameter of Borehole (in): 8.25"

Well Casing Diameter (in): 2"

Depth to Water (ft):

During Drilling: Unknown

Date: —

Post Development: TBD TOC

Date: —

Top of Bentonite Seal (ft): 17.40'

Top of Filter Pack (ft): 20.10'

Top of Screen Interval (ft): 22.10'

Bottom of Screen Interval (ft): 32.10'

Bottom of Well (ft): 32.50

Bottom of Filter Pack (ft): 32.50'

Bottom of Borehole (ft): 32.50'

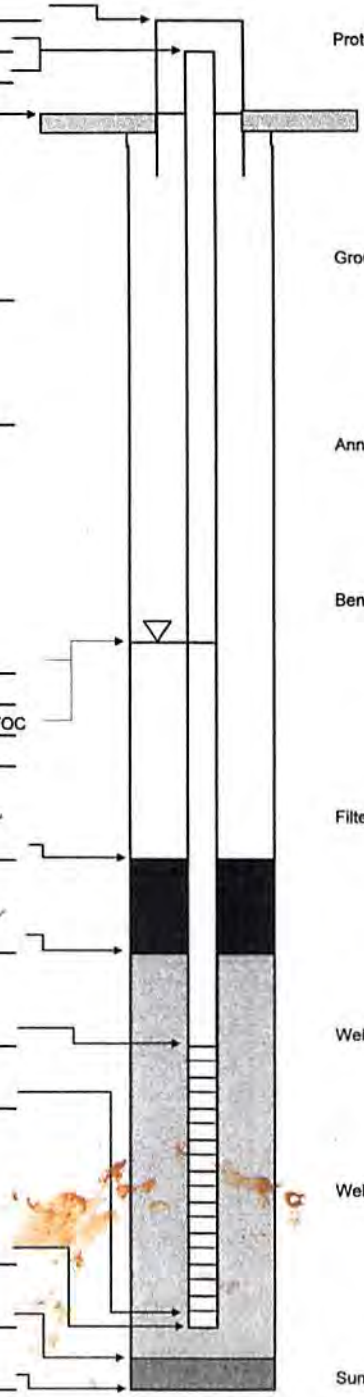

Protective Casing:

Type: Aluminum

Dimensions (in): 4x4

Length (ft): 5'

Guard Post: (4) 3" Posts

Ground Seal (Surface Pad)

Dimensions: 3x3x4

Type: Concrete

Annular Space Seal:

Type: Bentonite-Cement Grout

Installation: Gravity Tremie (Pumped)

Bentonite Seal:

Manufacturer: Wyo-Ben

Type: (Pellets) Slurry

Installation: 6-in lifts (One Section)

Gravity Tremie Pumped

Hydration time (hrs):

Filter Pack Material:

Manufacturer: Southern Filter Media

Product Name: Filter Media

Size: 20/40

Volume Added (ft³):

Installation: Gravity Tremie

Well Casing:

Manufacturer: Monoflex

Type: Sch 40 PVC

Diameter (in): 2"

Well Screen Casing:

Manufacturer: Monoflex

Type: Sch 40 PVC

Slot Size (in): 0.010

Slot Type: Continuous wrap Factory slot

Sump/End Cap: 0.4" Point

Backfill Material: None

Shaw

Shaw E & I, Inc.

ORIGINAL

HTRW DRILLING LOG		Client: ~~USACE Savannah~~ Shaw	Hole Number: 204-RS2033
Company Name: Shaw Environmental, Inc.		Drilling Subcontractor: GSE	Sheet 1 of 6 Sheets
Project: Redstone Arsenal		Location: RSA 204	
Name of Driller: Joe Tillman		Manufacturer's Designation of Drill: CME-75	
Sizes and Types of Drilling and Sampling Equipment	8.25" SS augers air Hammer air compressor	Surface Elevation: TBD	
		Date Started: 1-12-12	Date Completed: 01-25-12 ~~01-13-12~~
Overburden Thickness: ~~2~~ 38'		Depth Groundwater Encountered: TBD	
Depth Drilled into Rock: 5'		Depth to Water and Elapsed Time After Drilling Completed: NA	
Total Depth of Hole: 42.8' BGS		Other Water Level Measurements (Specify): NA	

Geotechnical Samples	Disturbed	Undisturbed	Total Number of Core Boxes
	NA	NA	NA

Samples for Chemical Analysis	VOC	Metals	Other	Other	Other	Total Core Recovery
	NA	NA	NA	NA	NA	—

Disposition of Hole	Backfilled	Monitoring Well	Other	Signature of Geologist
	No	Permanent	NA	[signature]

Location Sketch/Comments: Scale: (not to scale)

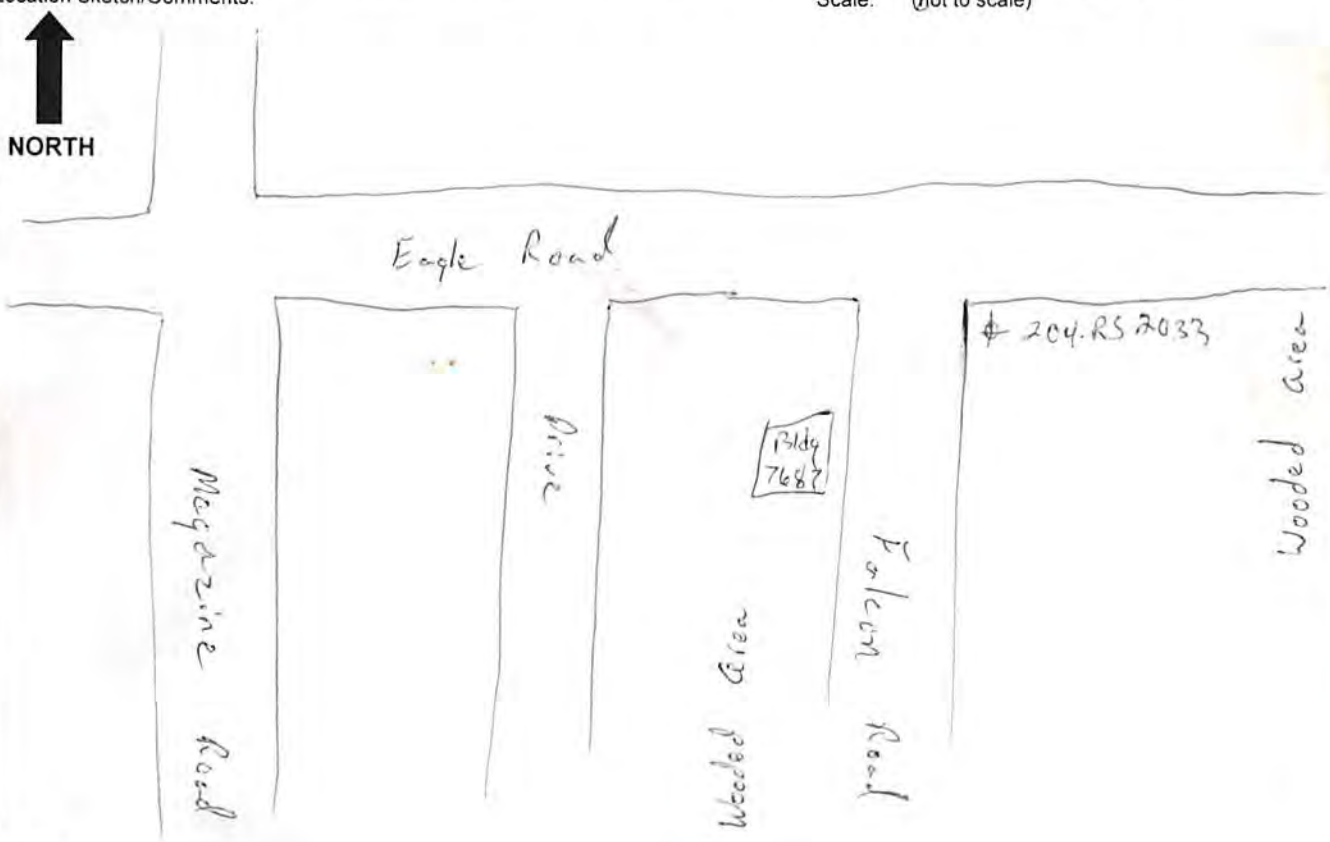

Shaw® Shaw Environmental, Inc.

Project: Redstone Arsenal	Hole Number: 204-RS2033

Shaw Environmental Inc.

HTRW DRILLING LOG

(continuation sheet)

Hole Number 204-RS2033

Project Redstone arsenal

Geologist J. Cull

Sheet 2 of 6 Sheets

Elev (ft)	Depth (ft) bgs	Description of Materials	USCS Class	Field Screening Results (ppm)	Geotech Sample or Core Box No	Analytical Sample No	Recovery (ft)	Remarks
N/A	0	Lithology Not Described No description of material		NA	NA	NA	NA	Hand auger to 5'
	1							
	2							Lithology previously logged during DPT
	3							
	4							
	5							
	6							
	7							
	8							
	9							
	10							

Project Redstone arsenal

Hole Number 204-RS2033

ORIGINAL

Shaw Environmental Inc.

HTRW DRILLING LOG

(continuation sheet)

Hole Number 204-RS2033

Project Redstone Arsenal

Contractor J. Cell

Sheet 3 of 6 Sheets

Elev (ft)	Depth (ft) bgs	Description of Materials	USCS Class	Field Screening Results (ppm)	Geotech Sample or Core Box No	Analytical Sample No	Recovery (ft)	Remarks
N/A ↓	10	Lithology Not Described No Description of material		NA ↓	NA ↓	NA ↓	NA ↓	Lithology previously typed during DPT
	11							
	12							
	13							
	14							
	15							
	16							
	17							
	18							
	19							
	20							

Project Redstone Arsenal

Hole Number 204-RS2033

Shaw Stone & Webster, Inc.

HTRW DRILLING LOG

(continuation sheet)

Hole Number 204-RS2033

Project Redstone Arsenal

Contractor J. Cah

Sheet 4 of 6 Sheets

Elev (ft)	Depth (ft) bgs	Description of Materials	USCS Class	Field Screening Results (ppm)	Geotech Sample or Core Box No	Analytical Sample No	Recovery (ft)	Remarks
N/A ↓	20			N/A ↓	N/A ↓	N/A ↓	N/A ↓	Lithology previously logged to 25' by DPT
	21							
	22							
	23							
	24							
	25							Hit bedrock at 25.1' bgs began air hammer and broke through limestone deposit after 2'. Brian Rhodes instructed to continue drilling until refusal
	26	Rock						
	27							
	28	Very soft yellowish red (5yr 5/8) silt Non-plastic and wet.	ML					
	29							
	30							

Project Redstone Arsenal

Hole Number 204-RS2033

ORIGINAL

SHAW

HTRW DRILLING LOG

(continuation sheet)

Hole Number 204-RS2033

Project Redstone arsenal

Geologist J. Call

Sheet 5 of 6 Sheets

Elev (ft)	Depth (ft) bgs	Description of Materials	USCS Code	Field Screening Results (ppm)	Geotech Sample or Core Box No	Analytical Sample No	Recovery (ft)	Remarks
N/A ↓	30	Very Soft yellowish red (5yr 5/8) silt. Non-plastic and wet	ML	N/A ↓	N/A ↓	N/A ↓	N/A ↓	
	31							
	32							
	33							
	34							
	35							
	36							
	37							
	38	Refusal						Encountered refusal at 38'
	39							
	40							

Project Redstone arsenal

Hole Number 204-RS2033

Shaw

HTRW DRILLING LOG

(continuation sheet)

Hole Number 204-RS2033

Project Redstone Arsenal

Geologist J. Call

Sheet 6 of 6 Sheets

Elev (ft)	Depth (ft) bgs	Description of Materials	USCS Line	Field Screening Results (ppm)	Geotech Sample or Core Box No	Analytical Sample No	Recovery (ft)	Remarks
N/A ↓	40			N/A ↓	N/A ↓	N/A ↓	N/A ↓	
	41							
	42	Bottom of boring/well @ 42.80' BGS						Bottom of well at 42.80'
	43							
	44							
	45							
	46							
	47							
	48							
	49							
	50							

Project Redstone Arsenal

Hole Number 204-RS2033

ORIGINAL

ORIGINAL

Monitoring Well Construction Form

Project:	Redstone Arsenal	Well Number:	204 - RS2033
Location:	Huntsville, Madison County, AL	Site Location:	204
Client:	~~USACE Savannah~~ Shaw E&I	Installation Date	01-25-12
Subcontractor:	GSE	Northing:	TBD
Driller:	GSE Joe Tillman	Easting:	TBD
Shaw Field Representative:	Brian Rhodes	Project Number:	136973

Protective Cover Elevation (ft): TBD

Top of Casing Elv. (ft): TBD

Top of Casing Stickup (ft): 2.5'

Land Surface Elv. (ft): TBD

Approximate Diameter of Borehole (in): 8.25"

Well Casing Diameter (in): 2"

Depth to Water (ft):

During Drilling: Unknown

Date: -

Post Development: TBD TOC

Date: -

Top of Bentonite Seal (ft): 28.8'

Top of Filter Pack (ft): 29.9'

Top of Screen Interval (ft): 32.4'

Bottom of Screen Interval (ft): 42.4'

Bottom of Well (ft): 42.8'

Bottom of Filter Pack (ft): 42.8'

Bottom of Borehole (ft): 42.8'

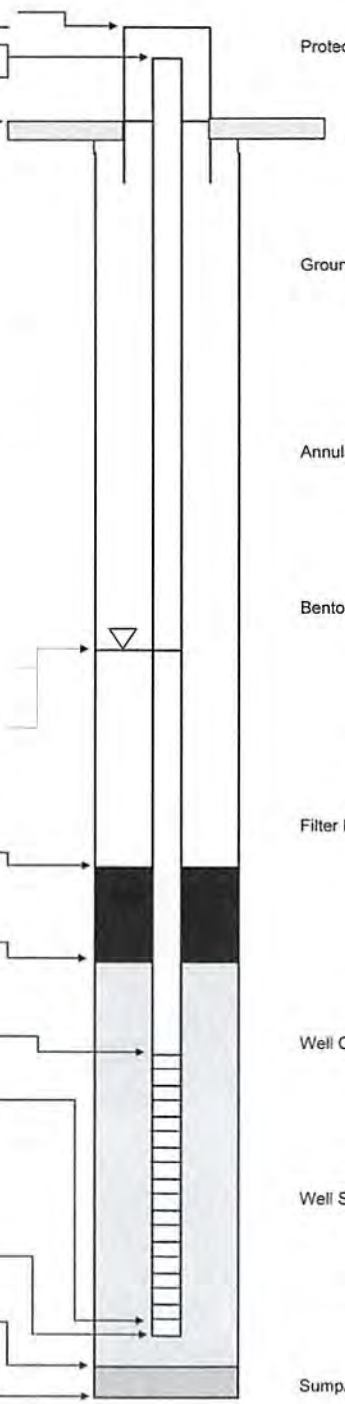

Protective Casing:

Type: aluminum

Dimensions (in): 4x4

Length (ft): 5'

Guard Post: (4) 3" post

Ground Seal (Surface Pad)

Dimensions: 3x3x4

Type: Concrete

Annular Space Seal:

Type: Bentonite-Cement Grout

Installation: Gravity Tremie (Pumped)

Bentonite Seal:

Manufacturer: Wyo-Ben

Type: Pellets Slurry

Installation: 6-in lifts (One Section)

Gravity Tremie Pumped

Hydration time (hrs):

Filter Pack Material:

Manufacturer: Southern Filter Media

Product Name: Filter Media

Size: 20/40

Volume Added (ft³):

Installation: (Gravity) Tremie

Well Casing:

Manufacturer: Monoflex

Type: Sch 40 PVC

Diameter (in): 2"

Well Screen Casing:

Manufacturer: Monoflex

Type: Sch 40 PVC

Slot Size (in): 0.010

Slot Type: Continuous wrap Factory slot

Sump/End Cap: 0.4" point

Backfill Material: None

Shaw

Shaw E & I, Inc.

ORIGINAL

HTRW DRILLING LOG

Client: Shaw E+I		Hole Number: 204-RS2034	
Company Name: GSE	Drilling Subcontractor: GSE	Sheet 1 of 4 Sheets	
Project: Redstone Arsenal	Location: RSA 204		
Name of Driller: Joe Tillman	Manufacturer's Designation of Drill: CME-75		
Sizes and Types of Drilling and Sampling Equipment: 8.25" SS augers, air hammer, air compressor	Surface Elevation: TBD		
	Date Started: 01-17-12	Date Completed: 01-25-12	
Overburden Thickness: 19.7'	Depth Groundwater Encountered: TBD		
Depth Drilled into Rock: 5'	Depth to Water and Elapsed Time After Drilling Completed: NA		
Total Depth of Hole: 24.7' BGS	Other Water Level Measurements (Specify): NA		

Geotechnical Samples	Disturbed	Undisturbed	Total Number of Core Boxes
	NA	NA	NA

Samples for Chemical Analysis	VOC	Metals	Other	Other	Other	Total Core Recovery
	NA	NA	NA	NA	NA	—

Disposition of Hole	Backfilled	Monitoring Well	Other	Signature of Geologist
	NA	Permanent	NA	

Location Sketch/Comments:

Scale: (not to scale)

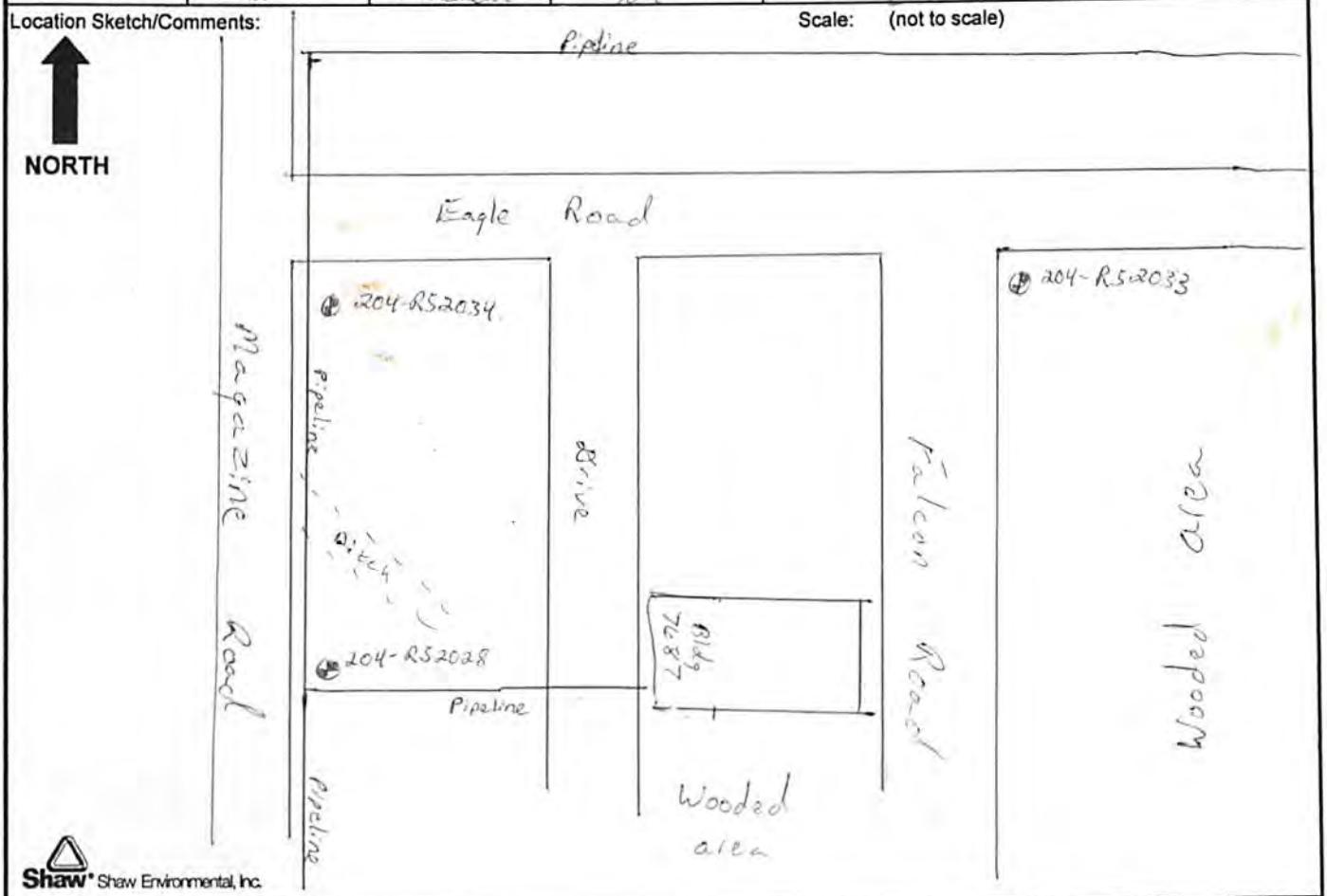

Shaw Shaw Environmental, Inc.

Project: Redstone Arsenal	Hole Number: 204-RS2034

HTRW DRILLING LOG

(continuation sheet)

Hole Number 204-RS2034

Project Redstone Arsenal

Geologist J. Call

Sheet 2 of 4 Sheets

Elev (ft)	Depth (ft) bgs	Description of Materials	USCS Line	Field Screening Results (ppm)	Geotech Sample or Core Box No	Analytical Sample No	Recovery (ft)	Remarks
NIA ↓	0	Lithology not described No description of material		NA ↓	NA ↓	NA ↓	NA ↓	Hand augered to 5' Lithology previously logged during DPT
	1							
	2							
	3							
	4							
	5							
	6							
	7							
	8							
	9							
	10							

Project Redstone Arsenal

Hole Number 204-RS2034

ORIGINAL

Shaw Stone & Webster, Inc.

HTRW DRILLING LOG

(continuation sheet)

Hole Number 204-RS2034

Project Redstone Arsenal

Geologist J. Cull

Sheet 3 of 4 Sheets

Elev (ft)	Depth (ft) Bgs	Description of Materials	USCS Line	Field Screening Results (ppm)	Geotech Sample or Core Box No	Analytical Sample No	Recovery (ft)	Remarks
NA ↓	10	Lithology Not Described		NA ↓	NA ↓	NA ↓	NA ↓	
		No Description of Material						
	11							
	12							
	13							
	14							
	15							
	16							
	17							
	18							
	19							
		Encountered Refusal						Encountered refusal at 19.70'
	20							

Project Redstone arsenal

Hole Number 204-RS2034

ORIGINAL

Shaw Environmental Inc.

HTRW DRILLING LOG

(continuation sheet)

Hole Number 204-RS2034

Project Redstone arsenal

Geologist J. Call

Sheet 4 of 4 Sheets

Elev (ft)	Depth (ft) bgs	Description of Materials	USCS Letter	Field Screening Results (ppm)	Geotech Sample or Core Box No	Analytical Sample No	Recovery (ft)	Remarks
	20	Lithology Not Described		NA	NA	NA	NA	
		No Description of material						
	21							
	22							
	23							
	24							
	25	Bottom of bore hole @ 24.7' BGS						Bottom of boring = 24.7' BGS
	26							
	27							
	28							
	29							
	30							

Project Redstone arsenal

Hole Number 204-RS2034

ORIGINAL

ORIGINAL

Monitoring Well Construction Form

Project:	Redstone Arsenal	Well Number:	204-RS2034
Location:	Huntsville, Madison County, AL	Site Location:	RSA-204
Client:	~~USACE Savannah~~ Shaw E+I	Installation Date	01-25-12
Subcontractor:	GSE	Northing:	TBD
Driller:	Joe Tillman	Easting:	TBD
Shaw Field Representative:	Brian Rhodes	Project Number:	136973

Protective Cover Elevation (ft): TBD

Top of Casing Elv. (ft): TBD

Top of Casing Stickup (ft): 2'5'

Land Surface Elv. (ft): TBD

Approximate Diameter of Borehole (in): 8.25"

Well Casing Diameter (in): 2"

Depth to Water (ft):

During Drilling: Unknown

Date: —

Post Development: TBD TOC

Date: —

Top of Bentonite Seal (ft): 9.90'

Top of Filter Pack (ft): 12.30'

Top of Screen Interval (ft): 14.20'

Bottom of Screen Interval (ft): 24.20'

Bottom of Well (ft): 24.60'

Bottom of Filter Pack (ft): 24.70'

Bottom of Borehole (ft): 24.70'

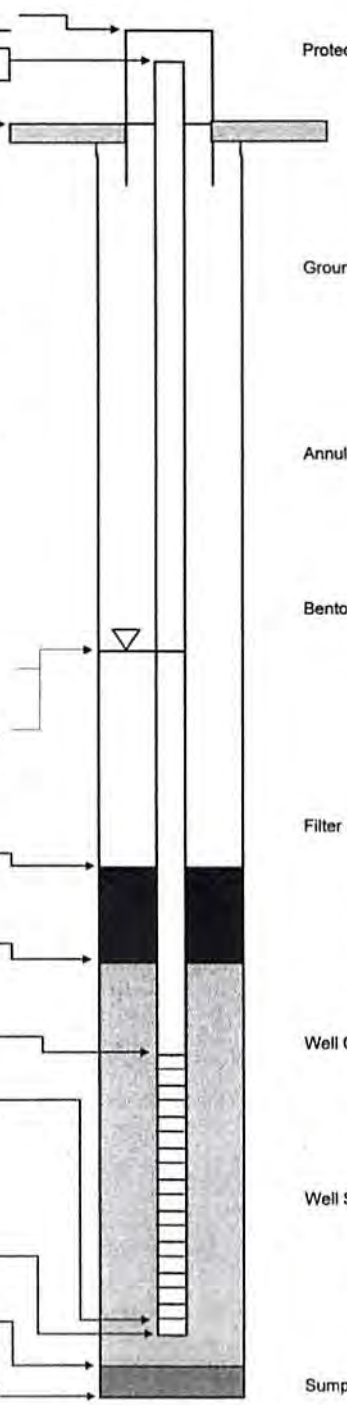

Protective Casing:

Type: aluminum

Dimensions (in): 4x4

Length (ft): 5'

Guard Post: (4) 3" Post

Ground Seal (Surface Pad)

Dimensions: 3x3x4

Type: Concrete

Annular Space Seal:

Type: Bentonite-Cement Grout

Installation: Gravity Tremie (Pumped)

Bentonite Seal:

Manufacturer: Wyo-Ben

Type: (Pellets) Slurry

Installation: 6-in lifts (One Section)

Gravity Tremie Pumped

Hydration time (hrs):

Filter Pack Material:

Manufacturer: Southern Filter Media

Product Name: Filter Media

Size: 20/40

Volume Added (ft³):

Installation: (Gravity) Tremie

Well Casing:

Manufacturer: Monoflex

Type: Sch 40 PVC

Diameter (in): 2"

Well Screen Casing:

Manufacturer: Monoflex

Type: Sch 40 PVC

Slot Size (in): 0.010

Slot Type: Continuous wrap Factory slot

Sump/End Cap: 0.4" Point

Backfill Material: None

Shaw

Shaw E & I, Inc.

CBI Shaw Environmental & Infrastructure, Inc. (A CB&I Company)	**HTRW DRILLING LOG**	Client CBI	Hole Number 204-RS2668
Company Name **Shaw Environmental, Inc.**	Drilling Subcontractor Major Drilling	Sheet 1 of 4 Sheets
Project Redstone Arsenal	Location RSA-204	
Name of Driller Mike Hansen	Manufacturer's Designation of Drill Brat-a-Sonic GP24-400RS	
Sizes and Types of Drilling and Sampling Equipment: 4" - core; 6" - core; 10" - outer	Surface Elevation TBD	
	Date Started 9/14/14	Date Completed 9/17/14
Overburden Thickness 24'	Depth Groundwater Encountered NA	
Depth Drilled into Rock 6'	Depth to Water and Elapsed Time After Drilling Completed NA	
Total Depth of Hole 55'	Other Water Level Measurements (Specify) NA	

Geotechnical Samples NA	Disturbed	Undisturbed	Total Number of Core Boxes

Samples for Chemical Analysis NA	VOC	Metals	Other	Other	Other	Total Core Recovery 50%

Disposition of Hole	Backfilled	Monitoring Well	Other	Signature of Geologist
		X		

Location Sketch/Comments: Scale: (not to scale)

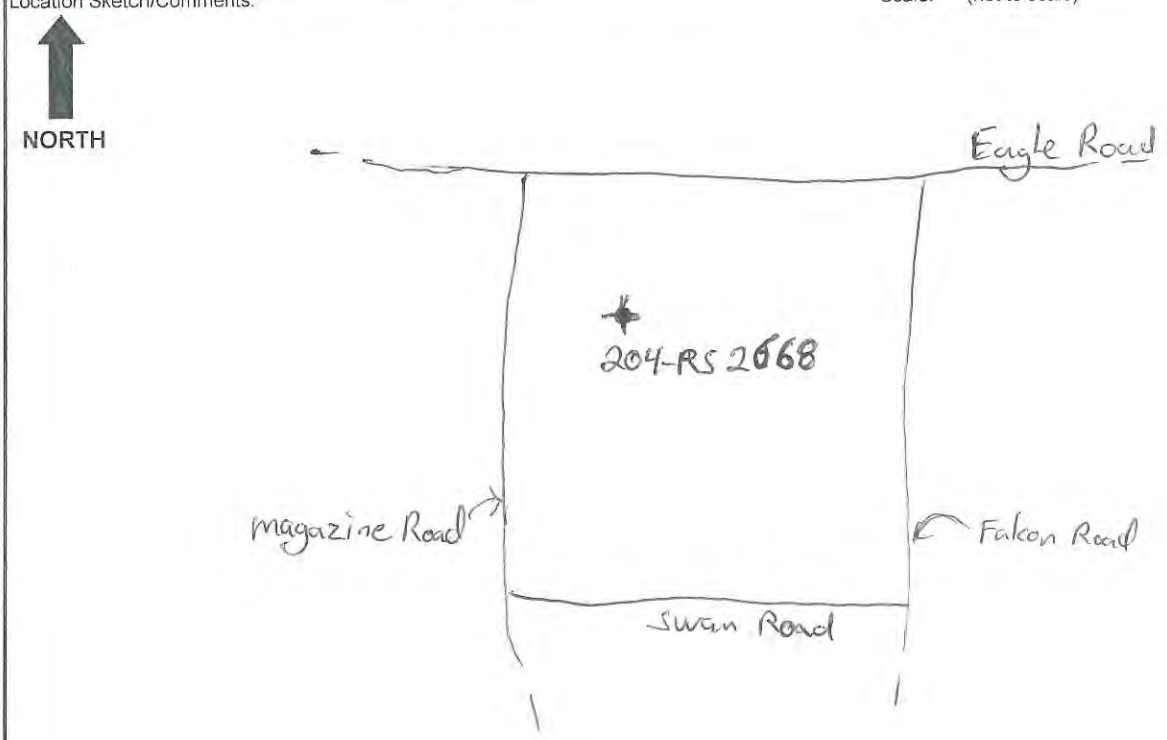

Project: Redstone Arsenal	Hole Number 204-RS2668

Shaw Environmental & Infrastructure, Inc.
(A CB&I Company)

HTRW DRILLING LOG

(continuation sheet)

Hole Number: 204-RS2668

Project: RSA - 204

Geologist: Tim Collen

Sheet 2 of 4 Sheets

Elev (ft)	Depth (ft) bgs	Description of Materials	USCS/ Litho	Field Screening Results (ppm)	Geotech. Sample or Core Box No.	Analytical Sample No.	Recovery (ft)	Remarks
		Brown/Red silty CLAY, some limestone gravel, no odor, dry	CL	0				
				0				
				0			5/5	
				0				
	5	Red/orange silty CLAY some limestone gravel, no odor, ~~dry~~ damp		0			—	
							9/10	
	10			0				
	15			0			—	
							9/10	
	20			0				

Project: 147104

Hole Number: 204-RS2668

Shaw Environmental & Infrastructure, Inc
(A CB&I Company)

HTRW DRILLING LOG

(continuation sheet)

Hole Number: 204-RS2668

Project: RSA-204

Geologist: Tim Cullen

Sheet 3 of 4 Sheets

Elev (ft)	Depth (ft) bgs	Description of Materials	USCS/ Litho	Field Screening Results (ppm)	Geotech. Sample or Core Box No.	Analytical Sample No.	Recovery (ft)	Remarks
	21	Red/orange, silty CLAY, some lime stone gravel, no odor, damp	CL	0				
	22			0			5/5	
	23			0				
	24	Bedrock, Limestone		0				
	25							
	26							
	27							
	28							
	29						9/10	* steel surface casing set to 30' BLS
	30							
	31							
	32							
	33							
	34							
	35							
	36						5/5	
	37							
	38							
	39							
	40							

Project: H71104

Hole Number: 204-RS2668

Shaw Environmental & Infrastructure, Inc
(A CB&I Company)

HTRW DRILLING LOG

(continuation sheet)

Hole Number: 204-RS2668

Project: RSA RSA-204

Geologist: Tim Cullen

Sheet 4 of 4 Sheets

Elev (ft)	Depth (ft) bgs	Description of Materials	USCS/ Litho	Field Screening Results (ppm)	Geotech. Sample or Core Box No.	Analytical Sample No.	Recovery (ft)	Remarks
	41	Bedrock, Limestone						
	42							
	43						9/10	
	44							
	45							
	46							
	47							
	48							
	49							
	50						4/5	
	51							
	52							
	53							
	54							* Well set to 55' SC: 45-55'
	55	Boring - TD (55')						

Project: 147104

Hole Number: 204-RS2668

Monitoring Well Construction Form (Bedrock)

Project:	Redstone Arsenal	Well Number:	204-RS2668
Location:	Huntsville, Madison County, AL	Site Location:	RSA-204
Client:	CBF	Installation Date	8/17/14
Subcontractor:	Aerostar	Northing:	TBD
Driller:	Major (Mike Hansen)	Easting:	TBD
Shaw Field Representative:	Dave Markum	Project Number:	147104

Protective Cover Elevation (ft): TBD

Top of Casing Elevation (ft): TBD

Top of Casing Stickup (ft): ~3'

Land Surface Elevation (ft): TBD

Approximate Diameter of Section 1 Borehole (in): 10

Diameter of Surface Casing (in): 6.2

Depth to Bedrock (ft): 24

Bottom of Surface Casing (ft): 30

Depth to Water (ft):

During Drilling: NA

Date:

Post Development: ~~8.95~~ (TOC)

Date: ~~9/25/14~~

Approximate Diameter of Section 2 Borehole (in): 6

Well Casing Diameter (in): 2

Top of Bentonite Seal (ft): 39

Top of Filter Pack (ft): 42

Top of Screen Interval (ft): 45

Bottom of Screen Interval (ft): 55

Bottom of Well (ft): 55

Bottom of Filter Pack (ft): 55

Bottom of Borehole (ft): 55

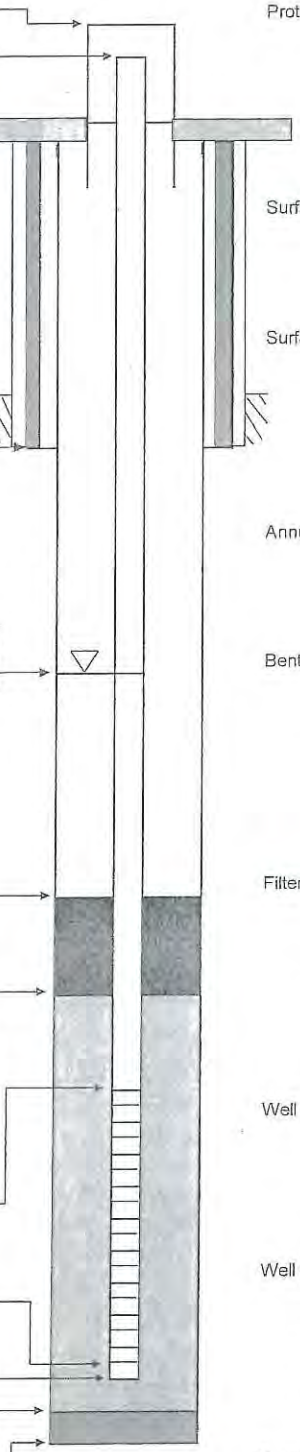

Protective Casing:

Type: steel

Dimensions (in): 4

Length (ft): 3' AGS / 5' total

Guard Post: 4x4" round steel

Surface Pad:

Dimensions: 3x3x4"

Type: Concrete

Surface Casing:

Type: steel

Diameter (in): 6.2

Installation: (Tremie) Haliburton Cementing Plug Other Plug

Annular Space Seal:

Type: Bentonite-Cement Grout

Installation: Gravity (Tremie) Pumped

Bentonite Seal:

Manufacturer: Enviroplug

Type: (Pellets) Slurry

Installation: 6-in lifts One Section (Gravity) Tremie Pumped

Hydration time (hrs): > 8hrs

Filter Pack Material:

Manufacturer: DSI

Product Name: well Gravel GP #1A

Size: 20/40

Volume Added (ft^3): 2.31

Installation: (Gravity) Tremie

Well Casing:

Manufacturer: Silverline Plastics

Type: Sch-40 PVC

Diameter (in): 2

Well Screen Casing:

Manufacturer: Silverline Plastics

Type: Sch-40 PVC

Slot Size (in): 2

Slot Type: Continuous wrap (Factory slot)

Sump/End Cap: PVC / threaded

Backfill Material: NA

Depths and heights are referenced to ground surface unless specified TOC.

All elevations are referenced to MSL (NAVD 88).

Shaw Environmental & Infrastructure, Inc.
(A CB&I Company)

Shaw Environmental & Infrastructure, Inc.
(A CB&I Company)

HTRW DRILLING LOG

Client	CB&J	Hole Number	RS2669 204-~~RS2669~~
Company Name	Shaw Environmental, Inc.	Drilling Subcontractor	Major Environmental
Sheet	1 of 4 Sheets		
Project	Redstone Arsenal	Location	KSA-204
Name of Driller	Mike Hanson	Manufacturer's Designation of Drill	Geoprobe 8140 LS
Sizes and Types of Drilling and Sampling Equipment	2" MB 4.0" Steel Drill Casing 6" Steel Drill Casing 10" Steel Drill Casing	Surface Elevation	TBD
		Date Started	9-19-2014
		Date Completed	9/22/14
Overburden Thickness	38'	Depth Groundwater Encountered	NA
Depth Drilled into Rock	22	Depth to Water and Elapsed Time After Drilling Completed	NA
Total Depth of Hole	60	Other Water Level Measurements (Specify)	NA

Geotechnical Samples	Disturbed	Undisturbed	Total Number of Core Boxes
NA			NA

Samples for Chemical Analysis	VOC	Metals	Other	Other	Other	Total Core Recovery
NA						99%

Disposition of Hole	Backfilled	Monitoring Well	Other	Signature of Geologist
		X		

Location Sketch/Comments:

Scale: (not to scale)

NORTH

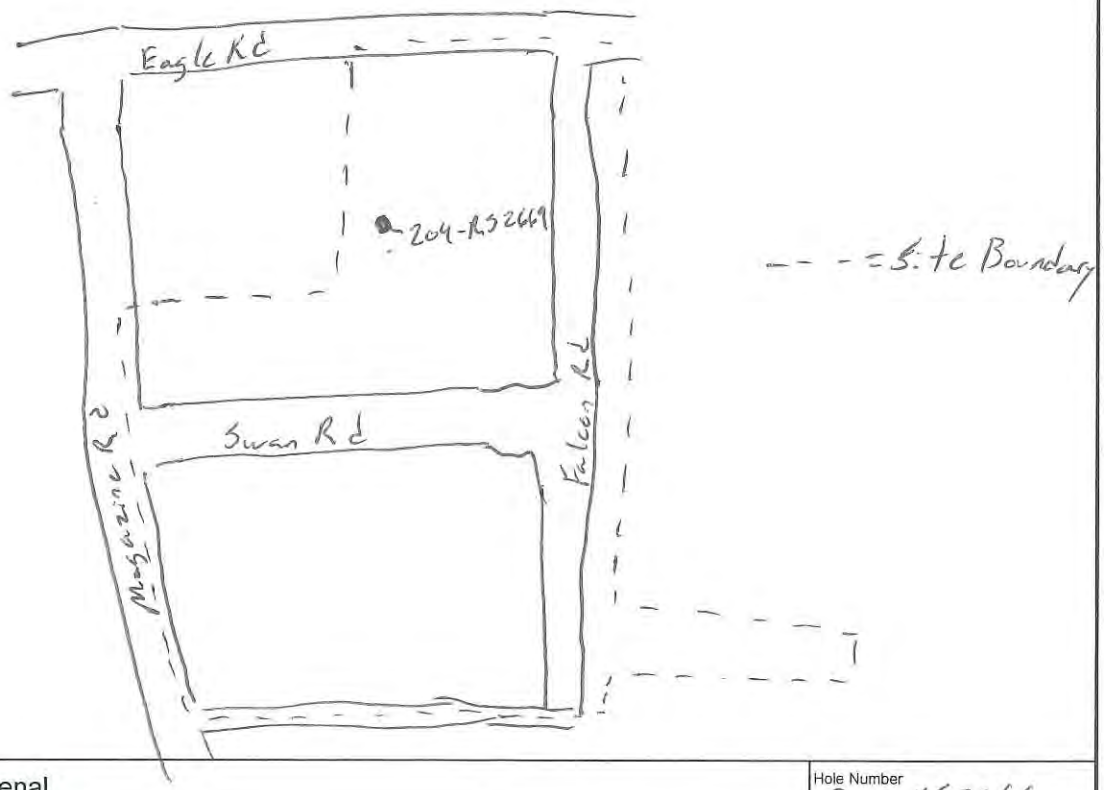

Project:	Redstone Arsenal	Hole Number	204-RS2669

Shaw Environmental & Infrastructure, Inc
(A CB&I Company)

HTRW DRILLING LOG

(continuation sheet)

Hole Number: 204-RS266 9

Project: RSA-204

Geologist: Mark Humbly

Sheet 2 of 4 Sheets

Elev (ft)	Depth (ft) bgs	Description of Materials	USCS/ Litho	Field Screening Results (ppm)	Geotech. Sample or Core Box No.	Analytical Sample No.	Recovery (ft)	Remarks
	0	Brown sandy clay, no odor, damp						
	1			0.0				
	2			0.0				
	3			0.0				
	4			0.0				
	5			0.0				
	6			0.0			10/10	
	7			0.0				
	8			0.0				
	9			0.0				
	10			0.0				
	11			0.0				
	12			0.0				
	13			0.0				
	14			0.0				
	15			0.0				
	16	Brown-orange silty clay w/ Limestone gravel (white to cream) No odor, Dry		0.0			10/10	
	17			0.0				
	18			0.0				
	19			0.0				
	20			0.0				

Project: RSA-204 / 147104

Hole Number: 204-RS266 9

Shaw Environmental & Infrastructure, Inc.
(A CB&I Company)

HTRW DRILLING LOG

(continuation sheet)

Hole Number: 204-RS2661

Project: RSA-204

Geologist: Mark Humblin

Sheet 3 of 4 Sheets

Elev (ft)	Depth (ft) bgs	Description of Materials	USCS/ Litho	Field Screening Results (ppm)	Geotech. Sample or Core Box No.	Analytical Sample No.	Recovery (ft)	Remarks
	20	Brown-orange silty clay, w/ lime stone gravel (white to cream) no odor, dry						
	21			0.0				
	22			0.0				
	23			0.0				
	24			0.0				
	25			0.0				
	26			0.0			10/10	
	27			0.0				
	28			0.0				
	29			0.0				
	30	No Recovery 30' to 38'		0.0			—	
	31			/				
	32			/				
	33			/				
	34			/				
	35			/				
	36			/			2 0"/10	
	37			/				
	38	Gray Limestone, Bedrock @ 38' BGS		0.0				38'-40' BGS Bedrock Fractured, Not Competant
	39			0.0				
	40	~~Bedrock, Gray Limestone (40' BGS)~~ MH		0.0				

Project: RSA-204 / 147104

Hole Number: 204-RS2669

Shaw Environmental & Infrastructure, Inc.
(A CB&I Company)

HTRW DRILLING LOG

(continuation sheet)

Hole Number: 204-RS2669

Project: RSA-204

Geologist: Mark Hamblin

Sheet 4 of 4 Sheets

Elev (ft)	Depth (ft) bgs	Description of Materials	USCS/ Litho	Field Screening Results (ppm)	Geotech. Sample or Core Box No.	Analytical Sample No.	Recovery (ft)	Remarks
	40	Gray Limestone, Bedrock No odor, dry						Competent Bedrock @ 40' BGS
	41			0.0				
	42			0.0				
	43			0.0			9/10	
	44			0.0				
	45			0.0				Steel * Casing Set @ 45' BLS
	46							
	47							
	48							
	49							
	50							
	51							
	52							
	53							
	54						8/10	
	55							
	56							
	57							
	58							
	59							* well set @ 60' SC: 50-60'
	60	Boring TD (60' BLS)						

Project: RSA-204 / 147104

Hole Number: 204-RS2669

Monitoring Well Construction Form (Bedrock)

Project:	Redstone Arsenal	Well Number:	204-RS 2669
Location:	Huntsville, Madison County, AL	Site Location:	RSA-204
Client:	CBI	Installation Date	9/22/14
Subcontractor:	Aerostar	Northing:	TBD
Driller:	Major	Easting:	TBD
Shaw Field Representative:	Dave Markum	Project Number:	147104

Protective Cover Elevation (ft): TBD

Top of Casing Elevation (ft): TBD

Top of Casing Stickup (ft): ~3

Land Surface Elevation (ft): TBD

Approximate Diameter of Section 1 Borehole (in): 10

Diameter of Surface Casing (in): 6.2

Depth to Bedrock (ft): 38

Bottom of Surface Casing (ft): 45

Depth to Water (ft):

During Drilling: NA

Date:

Post Development: NA TOC

Date:

Approximate Diameter of Section 2 Borehole (in): 6

Well Casing Diameter (in): 2

Top of Bentonite Seal (ft): 43

Top of Filter Pack (ft): 48

Top of Screen Interval (ft): 50

Bottom of Screen Interval (ft): 60

Bottom of Well (ft): 60

Bottom of Filter Pack (ft): 60

Bottom of Borehole (ft): 60

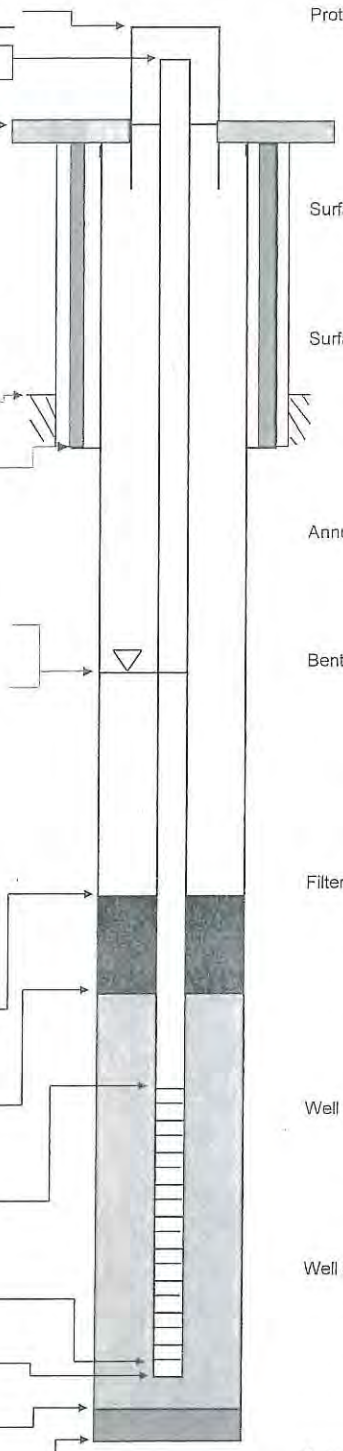

Protective Casing:

Type: Steel

Dimensions (in): 4

Length (ft): 3' AG / 5' tot.

Guard Post: 4x 4" round steel

Surface Pad:

Dimensions: 3'x3'x4"

Type: Concrete

Surface Casing:

Type: steel-Threaded

Diameter (in): 6.2

Installation: (Tremie) Haliburton Cementing Plug Other Plug

Annular Space Seal:

Type: Bentonite-Cement Grout

Installation: Gravity (Tremie) Pumped

Bentonite Seal:

Manufacturer: Enviroplug

Type: (Pellets) Slurry

Installation: 6-in lifts One Section (Gravity) Tremie Pumped

Hydration time (hrs): ~5 hrs

Filter Pack Material:

Manufacturer: PSI

Product Name: Well Gravel GP#1A

Size: 20/40

Volume Added (ft^3): 2.11

Installation: (Gravity) Tremie

Well Casing:

Manufacturer: Silverline Plastics

Type: sch-40 PVC

Diameter (in): 2

Well Screen Casing:

Manufacturer: Silverline Plastics

Type: sch-40 PVC

Slot Size (in): 2

Slot Type: Continuous (Factory slot) wrap

Sump/End Cap: PVC / Threaded

Backfill Material: NA

CBI

Shaw Environmental & Infrastructure, Inc.
(A CB&I Company)

Depths and heights are referenced to ground surface unless specified TOC.
All elevations are referenced to MSL (NAVD 88).

CBI Shaw Environmental & Infrastructure, Inc. (A CB&I Company)	**HTRW DRILLING LOG**	Client CBI	Hole Number 204-RS2670
Company Name **Shaw Environmental, Inc.**	Drilling Subcontractor Major Drilling	Sheet 1 of 4 Sheets
Project Redstone Arsenal	Location RSA-204	
Name of Driller Mike Hansen	Manufacturer's Designation of Drill Bret-a-Sonic GP24-400RS	
Sizes and Types of Drilling and Sampling Equipment: 4" - core; 6" - core; 10" - auger	Surface Elevation TBD	
	Date Started 9/10/2014	Date Completed 9/13/14
Overburden Thickness 21'	Depth Groundwater Encountered NA	
Depth Drilled into Rock 29	Depth to Water and Elapsed Time After Drilling Completed NA	
Total Depth of Hole 50	Other Water Level Measurements (Specify) NA	

Geotechnical Samples NA	Disturbed	Undisturbed	Total Number of Core Boxes NA

Samples for Chemical Analysis NA	VOC	Metals	Other	Other	Other	Total Core Recovery 48'
	/	/	/	/	/	

Disposition of Hole	Backfilled	Monitoring Well	Other	Signature of Geologist
		✓		

Location Sketch/Comments: Scale: (not to scale)

Project: Redstone Arsenal	Hole Number 204-RS2670

Shaw Environmental & Infrastructure, Inc.
(A CB&I Company)

HTRW DRILLING LOG

(continuation sheet)

Hole Number: 204-RS2670

Project: RSA-204

Geologist: Mark Hamslin

Sheet 2 of 4 Sheets

Elev (ft)	Depth (ft) bgs	Description of Materials	USCS/ Litho	Field Screening Results (ppm)	Geotech. Sample or Core Box No.	Analytical Sample No.	Recovery (ft)	Remarks
	0	Brown - Orange Silty Clay w/ Limestone gravel (white/cream) - No odor, damp	CL	0.0				
	1							
	2							
	3						5/5	
	4							
	5			0.0				
	6							
	7							
	8						5/5	
	9							
	10			0.0				
	11							
	12							
	13						5/5	
	14							
	15			0.0				
	16							
	17							
	18						5/5	
	19							
	20							

Project: RSA-204

Hole Number: 204-RS2670

Shaw Environmental & Infrastructure, Inc.
(A CB&I Company)

HTRW DRILLING LOG

(continuation sheet)

Hole Number: 204-RS2670

Project: RSA-204

Geologist: Mark Hamslin

Sheet 3 of 4 Sheets

Elev (ft)	Depth (ft) bgs	Description of Materials	USCS/ Litho	Field Screening Results (ppm)	Geotech. Sample or Core Box No.	Analytical Sample No.	Recovery (ft)	Remarks
	20	Brown-orange silty clay w/ limestone gravel (white/cream) - No odor, damp		0.0			1/1	
	21	Limestone Bedrock @ 21' Below ground surface						
	22	Limestone Bedrock						
	23							
	24							
	25						8/9	
	26							
	27							
	28							
	29							
	30							*Surface casing set to 30' BLS
	31							
	32							
	33							
	34						10/10	
	35							
	36							
	37							
	38							
	39							
	40							

Project: RSA-204

Hole Number: 204-RS2670

Shaw Environmental & Infrastructure, Inc.
(A CB&I Company)

HTRW DRILLING LOG

(continuation sheet)

Hole Number: 204-RS2670

Project: RSA-204

Geologist: Tim Cullen/Mark H.

Sheet 4 of 4 Sheets

Elev (ft)	Depth (ft) bgs	Description of Materials	USCS/ Litho	Field Screening Results (ppm)	Geotech. Sample or Core Box No.	Analytical Sample No.	Recovery (ft)	Remarks
		Bedrock, Limestone						
	41	Apparent Frac./water Bearing zone ~41-43'						
	42							
	43						9/0	
	44							
	45							
	46							
	47							
	48							
	49							
	50	Boring - TD (50' BLS)						* set well screen 40-50'

Project: RSA-204

Hole Number: 204-RS2670

Monitoring Well Construction Form (Bedrock)

Project:	Redstone Arsenal	Well Number:	204-RS2670
Location:	Huntsville, Madison County, AL	Site Location:	RSA-204
Client:	CBI	Installation Date	9/13/14
Subcontractor:	Aerostar	Northing:	TBD
Driller:	Major	Easting:	TBD
Shaw Field Representative:	Dave Markum	Project Number:	147104

Protective Cover Elevation (ft): TBD

Top of Casing Elevation (ft): TBD

Top of Casing Stickup (ft): ~3

Land Surface Elevation (ft): TBD

Approximate Diameter of Section 1 Borehole (in): 10

Diameter of Surface Casing (in): 6.2

Depth to Bedrock (ft): 21

Bottom of Surface Casing (ft): 30

Depth to Water (ft):

During Drilling: NA

Date:

Post Development: NA TOC

Date:

Approximate Diameter of Section 2 Borehole (in): 6

Well Casing Diameter (in): 2

Top of Bentonite Seal (ft): 34

Top of Filter Pack (ft): 37

Top of Screen Interval (ft): 40

Bottom of Screen Interval (ft): 50

Bottom of Well (ft): 50

Bottom of Filter Pack (ft): 50

Bottom of Borehole (ft): 50

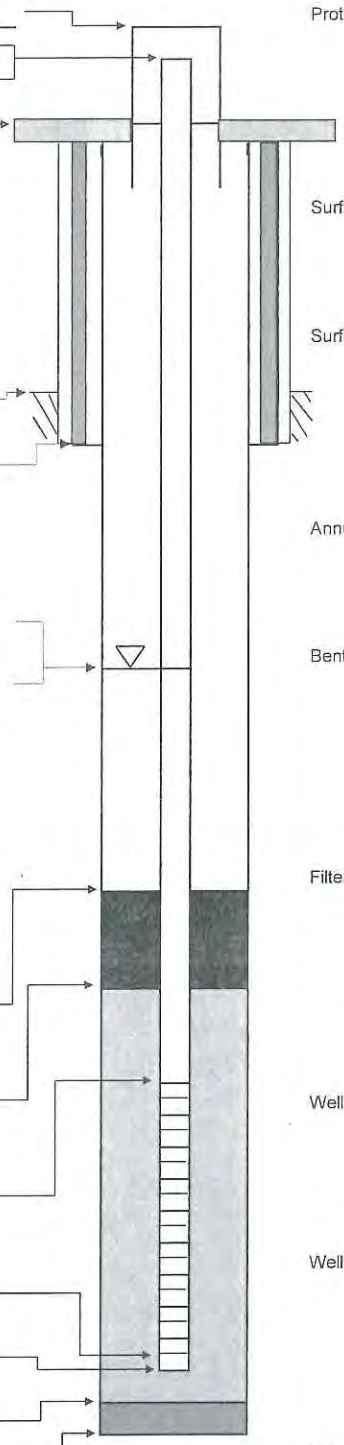

Protective Casing:

Type: Steel

Dimensions (in): 4

Length (ft): 3' AG / 5' tot.

Guard Post: 4x4" round steel

Surface Pad:

Dimensions: 3'x3'x4"

Type: Concrete

Surface Casing:

Type: Steel - Threaded

Diameter (in): 6.2

Installation: Tremie Haliburton Cementing Plug Other Plug

Annular Space Seal:

Type: Bentonite-Cement Grout

Installation: Gravity Tremie Pumped

Bentonite Seal:

Manufacturer: Enviroplug

Type: Pellets Slurry

Installation: 6-in lifts One Section Gravity Tremie Pumped

Hydration time (hrs): >8hrs

Filter Pack Material:

Manufacturer: DSI

Product Name: Well Grad GP#1A

Size: 20/50

Volume Added (ft^3): 2.31

Installation: Gravity Tremie

Well Casing:

Manufacturer: Silverline Plastics

Type: sch-40 PVC

Diameter (in): 2

Well Screen Casing:

Manufacturer: Silverline Plastics

Type: sch-40 PVC

Slot Size (in): 0.01

Slot Type: Continuous wrap Factory slot

Sump/End Cap: PVC/Threaded

Backfill Material: NA

CBI

Shaw Environmental & Infrastructure, Inc.
(A CB&I Company)

Depths and heights are referenced to ground surface unless specified TOC.
All elevations are referenced to MSL (NAVD 88).

Shaw Environmental & Infrastructure, Inc.
(A CB&I Company)

HTRW DRILLING LOG

Client	CBI	Hole Number	204-RS2671
Company Name	Shaw Environmental, Inc.	Drilling Subcontractor	Major Drilling
Sheet	1 of 5 Sheets		
Project	Redstone Arsenal (RSA)	Location	RSA-204
Name of Driller	Mike Hansen (Major Drilling)	Manufacturer's Designation of Drill	Bruta Sonic GP24-400RS
Sizes and Types of Drilling and Sampling Equipment	4" sonic core barrel 6" outer core barrel 10" outer	Surface Elevation	TBD
		Date Started	9/8/14
		Date Completed	9/12/14
Overburden Thickness	22'	Depth Groundwater Encountered	NA
Depth Drilled into Rock	43'	Depth to Water and Elapsed Time After Drilling Completed	NA
Total Depth of Hole	65	Other Water Level Measurements (Specify)	NA

Geotechnical Samples	NA	Disturbed	Undisturbed	Total Number of Core Boxes	NA
Samples for Chemical Analysis	NA	VOC	Metals	Other	Other	Other	Total Core Recovery 54

Disposition of Hole	Backfilled	Monitoring Well	Other	Signature of Geologist
		X		

Location Sketch/Comments:

Scale: (not to scale)

Project:	Redstone Arsenal	Hole Number	204-RS2671

Shaw Environmental & Infrastructure, Inc.
(A CB&I Company)

HTRW DRILLING LOG

(continuation sheet)

Hole Number: 204-RS2671

Project: RSA

Geologist: Tim Cullen

Sheet 2 of 5 Sheets

Elev (ft)	Depth (ft) bgs	Description of Materials	USCS/ Litho	Field Screening Results (ppm)	Geotech. Sample or Core Box No.	Analytical Sample No.	Recovery (ft)	Remarks
		Asphalt - 2"						
	1	Red/orange, silty CLAY w/ some limestone gravel, no odor, damp	CL	0ppm			5/5	
	2			0				
	3			0				
	4			0				
	5			0				
	6			0				
	7			0				
	8			0				
	9			0				
	10			0				
	11			0				
	12			0				
	13			0				
	14			0				
	15			0				
	16			0				
	17			0				
	18			0			15/15	
	19			0				
	20			0				

Project: 147104

Hole Number: 204-RS2671

Shaw Environmental & Infrastructure, Inc.
(A CB&I Company)

HTRW DRILLING LOG

(continuation sheet)

Hole Number: 204-RS267

Project: RSA

Geologist: Tim Cullen

Sheet 3 of 5 Sheets

Elev (ft)	Depth (ft) bgs	Description of Materials	USCS/ Litho	Field Screening Results (ppm)	Geotech. Sample or Core Box No.	Analytical Sample No.	Recovery (ft)	Remarks
	21	Red/orange, silty CLAY, no odor, damp, some gravel	CL				2/2	
	22	Limestone, Bedrock						
	23							
	24						7/7	
	25							
	30							*steel surface set to 30' BLS
	35						7/15	
	40							

Project: 147104

Hole Number: 204-RS267

Shaw Environmental & Infrastructure, Inc.
(A CB&I Company)

HTRW DRILLING LOG

(continuation sheet)

Hole Number: 204-RS2671

Project: RSA

Geologist: Tim Cullen

Sheet 4 of 5 Sheets

Elev (ft)	Depth (ft) bgs	Description of Materials	USCS/ Litho	Field Screening Results (ppm)	Geotech. Sample or Core Box No.	Analytical Sample No.	Recovery (ft)	Remarks
		Bedrock Limestone						
	45							
							8/10	
	50							
	55							
							9/10	
	60							

Project: 147104

Hole Number: 204-RS2671

Shaw Environmental & Infrastructure, Inc.
(A CB&I Company)

HTRW DRILLING LOG

(continuation sheet)

Hole Number: 204-RS2671

Project: RSA

Geologist: Tim Cullen

Sheet 5 of 5 Sheets

Elev (ft)	Depth (ft) bgs	Description of Materials	USCS/ Litho	Field Screening Results (ppm)	Geotech. Sample or Core Box No.	Analytical Sample No.	Recovery (ft)	Remarks
		Bedrock, Limestone						
	61	(61-62' Apparent water bearing zone/Frac?)						water bearing zone
	62							
	63							
	64							
	65	Boring - T.D. (65 BLS)						Well set to 65' SC 55-65'

Project: 147104

Hole Number: 204-RS2671

Monitoring Well Construction Form (Bedrock)

Project:	Redstone Arsenal	Well Number:	204-RS2671
Location:	Huntsville, Madison County, AL	Site Location:	RSA 204
Client:	CBI	Installation Date	9/12/14
Subcontractor:	Aerostar	Northing:	TBD
Driller:	Major	Easting:	TBD
Shaw Field Representative:	Dave Markin	Project Number:	147104

Protective Cover Elevation (ft): TBD

Top of Casing Elevation (ft): TBD

Top of Casing Stickup (ft): NA

Land Surface Elevation (ft): TBD

Approximate Diameter of Section 1 Borehole (in): 10

Diameter of Surface Casing (in): 6.2

Depth to Bedrock (ft): 22

Bottom of Surface Casing (ft): 30

Depth to Water (ft):

During Drilling: NA

Date: NA

Post Development: NA TOC

Date:

Approximate Diameter of Section 2 Borehole (in): 6

Well Casing Diameter (in): 2

Top of Bentonite Seal (ft): 49

Top of Filter Pack (ft): 52

Top of Screen Interval (ft): 55

Bottom of Screen Interval (ft): 65

Bottom of Well (ft): 65

Bottom of Filter Pack (ft): 65

Bottom of Borehole (ft): 65

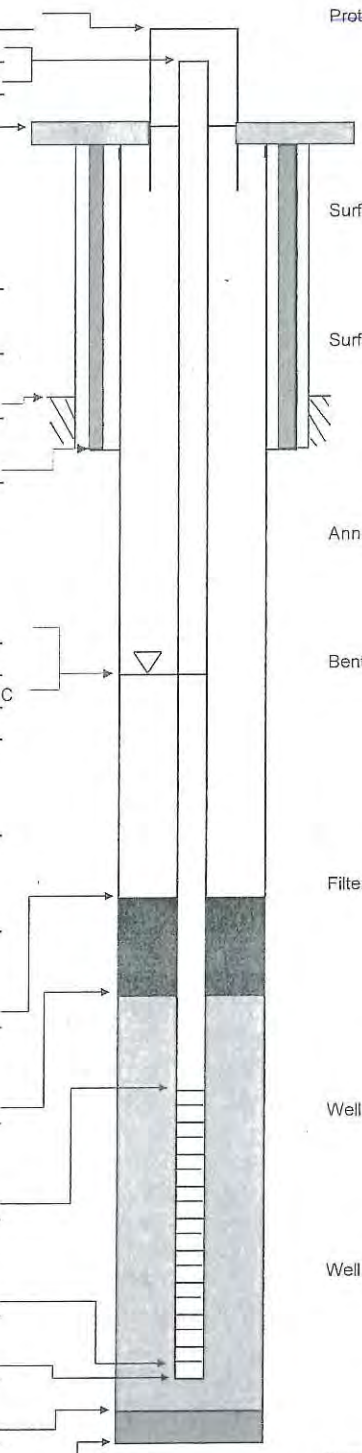

~~Protective Casing:~~ Flush Mount: 8" steel bolt down manhole

Type: N/A

Dimensions (in):

Length (ft):

Guard Post:

Surface Pad:

Dimensions: 3'x3'x4"

Type: Concrete

Surface Casing:

Type: steel

Diameter (in): 6.2

Installation: (Tremie) Haliburton Cementing Plug Other Plug

Annular Space Seal:

Type: Bentonite-Cement Grout

Installation: Gravity (Tremie) Pumped

Bentonite Seal:

Manufacturer: EnviroPlug

Type: (Pellets) Slurry

Installation: 6-in lifts One Section (Gravity) Tremie Pumped

Hydration time (hrs): > 8hrs

Filter Pack Material:

Manufacturer: DSI

Product Name: well Gravel GP #1/4

Size: 20/40

Volume Added (ft^3): 2.31

Installation: (Gravity) Tremie

Well Casing:

Manufacturer: Silverline Plastics

Type: sch-40 PVC

Diameter (in): 2

Well Screen Casing:

Manufacturer: silverline Plastics

Type: sch-40 PVC

Slot Size (in): 0.01

Slot Type: Continuous wrap (Factory slot)

Sump/End Cap: PVC/threaded

Backfill Material: N/A

Depths and heights are referenced to ground surface unless specified TOC.

All elevations are referenced to MSL (NAVD 88).

Shaw Environmental & Infrastructure, Inc.
(A CB&I Company)

APPENDIX J

NOTICE OF ENVIRONMENTAL USE RESTRICTIONS

Table of Contents

Page

1.0 Introduction 1
2.0 Site Background 1
2.1 Site Conditions 1
2.2 Summary of Need for Action 2
2.3 Corrective Measure Activities 3
2.4 Reason for the Environmental Use Restriction 3
3.0 Use Restrictions 4
4.0 Ongoing Obligations and Responsibilities 4
4.1 Inspections and Repairs 4
4.2 Monitoring 4
4.3 Notices 5
Figure
Attachment 1 – Notice of Environmental Use Restrictions

List of Figures

Figure	*Title*	*Follows Tab*

Figure J-1 RSA-204 Environmental Use Restriction Boundary

1.0 Introduction

The U.S. Army Garrison–Redstone is completing studies of the environmental impact of known or suspected waste sites at Redstone Arsenal (RSA), Madison County, Alabama, under the management of the U.S. Army Environmental Command. The location of RSA is shown on Figure 1-1 in the corrective measures implementation (CMI) work plan. As described in the Resource Conservation and Recovery Act facility investigation report for RSA-204, the site was used as an oxidizer facility as part of Thiokol Corporation's (Thiokol) work with developing solid rocket propellant in the former Redstone Arsenal Rocket Engine area. RSA-204 occupies 8.5 acres near the intersection of Eagle Road and Magazine Road in the southeastern portion of RSA in Test Area 10 (CMI work plan Figure 1-1). The selected corrective measures in the CMI work plan will not permit the entire site to be restored to conditions suitable for unrestricted use. Perchlorate-contaminated soils exceeding the cleanup goal (CG) are present in two site areas, one of which is adjacent to the east side of Building 7689. Building 7689 is still in operation for the foreseeable future for the Army's mission. As such, the corrective measures incorporate land-use controls and, in accordance with Alabama Administrative Code r. 335-5-1 and Alabama Department of Environmental Management (ADEM) Memorandum #304, an Environmental Use Restriction (EUR) must be prepared. This document represents a draft EUR, which will be finalized based on comments provided by ADEM once the corrective measures are complete at RSA-204. Once final, this document and the attached Notice of Environmental Use Restriction (hereinafter referred to as the Notice) (Attachment 1) will be filed with ADEM and incorporated in the RSA Installation Master Plan, and the Notice will be recorded into applicable land records, as required by Alabama Administrative Code r. 335-5-.01(2)(j).

As indicated in Attachment 1, an Environmental Covenant in accordance with Alabama Administrative Code r. 335-5-1 will be executed and filed if the property is transferred to an owner that is not the federal government.

The remainder of this document provides descriptions of site background; the need for and nature of the corrective measures; the need for a EUR; the use restrictions; and ongoing obligations and responsibility for inspections, repairs, monitoring, and notices.

2.0 Site Background

2.1 Site Conditions

RSA-204 includes existing Buildings 7687, 7688, 7689, 7690, and 7691, which the Army constructed in 1978 to support the rocket motor testing and production activities conducted by Thiokol. Oxidizer was received at the oxidizer service facility (Building 7687) and explosives

were dried at the Class-1.1 nitramine drying facility (Building 7688). The oxidizer and explosives were transported to the ammonium perchlorate grinding facility (Building 7689), the nitramine grinding facility (Building 7690), and the ammonium perchlorate processing facility (Building 7691). Following grinding and processing, the oxidizer powder was transported to nearby mixing facilities outside of the RSA-204 site. The Thiokol operations at RSA-204 were deactivated between 1993 and 1996. The buildings are currently used by the Aviation and Missile Research, Development, and Engineering Center for inert material storage (Building 7687) and live explosive work, both attended and remote, depending on the program (Buildings 7688 through 7691).

Perchlorate contamination is present in subsurface soil and extends to the average depth of groundwater. Based on the results of the fate and transport evaluation, perchlorate is present in site subsurface soils at concentrations that have the potential to leach from soil and locally impact groundwater quality. The Army has selected excavation and off-site disposal to achieve the CG for perchlorate-contaminated soil in two areas of the site. However, perchlorate-contaminated soil above the CG exists adjacent to Building 7689 on the east side. The building actively supports the Army's mission and is not scheduled for demolition in the near future. Thus, the contamination cannot be practically removed or treated adjacent to the building due to safety concerns and concerns regarding the stability of the building.

2.2 Summary of Need for Action

The RFI concluded that perchlorate in soil poses an ongoing sourcing threat to groundwater from the soil-to-groundwater migration pathway. An Alabama Risk-Based Corrective Action evaluation for human health and a screening-level ecological risk assessment did not identify a human health risk or an ecological risk from exposure to contaminated soil at RSA-204. Therefore, the soil cleanup action at RSA-204 is not driven by unacceptable human health exposure risk but by the need to protect groundwater from continued leaching of perchlorate in soil to groundwater. Perchlorate, trichloroethene, and explosive compounds in groundwater beneath RSA-204 would potentially pose an unacceptable threat to human health if groundwater is ever used for potable purposes. Corrective measures are therefore needed to address both soil and groundwater at RSA-204.

The corrective measure objectives (CMO) for RSA-204 are as follows:

- Cleanup affected groundwater to concentrations determined to be within acceptable levels for human exposure.

- Reduce perchlorate concentrations in soil at RSA-204 to minimize the potential for perchlorate contamination in site soils to act as a continuing source of groundwater contamination.

There are two areas of contaminated subsurface soil at the site (CMI work plan Figure 4-2):

- Central Area – An area of perchlorate-contaminated subsurface soil exceeding the established CG of 1.7 milligrams per kilogram exists in the forested area between Buildings 7687, 7688, and 7691.
- Southeastern Area - An area of perchlorate-contaminated subsurface soil exceeding the CG exists northeast of Building 7689, associated with a captive sump located on the north side of the building.

The contaminated groundwater will be addressed through in situ enhanced bioremediation (CMI work plan Figure 4-1).

2.3 Corrective Measure Activities

The Army has selected in situ enhanced bioremediation for perchlorate-, trichloroethene-, and explosives-contaminated groundwater under RSA-204 followed by monitored natural attenuation and long-term monitoring. The soil corrective measures include excavation and off-site disposal of perchlorate-contaminated soils. However, soils with perchlorate concentrations above the CG are present adjacent to Building 7689 on the east side. This soil cannot be excavated because the building is currently operational and because of safety concerns and concerns regarding affecting the stability of the building. Therefore, an impermeable cover will be placed over the soils outside the building (Figure J-1) to minimize leaching of perchlorate in this area. The excavation activities and the placement of the impermeable concrete cap will achieve the soil CMO described in Section 2.2.

2.4 Reason for the Environmental Use Restriction

The corrective measures activities conducted at RSA-204 will not restore all site areas to conditions suitable for unrestricted future use due to the presence of perchlorate at concentrations above the CG in soil adjacent to operational Building 7689. Therefore, land-use controls will be implemented at Building 7689 and the localized cap area as part of the corrective measures for surface media at RSA-204 (Figure J-1). Interim land-use controls are already in place for installation-wide groundwater at RSA, and the in situ enhanced bioremediation for groundwater is expected to achieve the groundwater CMO described in Section 2.2.

3.0 Use Restrictions

The use restrictions for RSA-204 are as follows:

- Excavation or other activities that would disturb the impermeable concrete cap adjacent to Building 7689 are prohibited unless conducted with appropriate health and safety precautions. If such activities are conducted, the cover must be restored upon completion of the work.
- The area of the impermeable concrete cap will be identified with signage prohibiting digging without the approval of the Chief, Installation Restoration Branch within the Environmental Management Division.
- Soil currently covered by Building 7689 must remain covered with the building or other impermeable cap unless soil confirmation sampling demonstrates that perchlorate concentrations are below the CG (1.7 milligrams per kilogram).

4.0 Ongoing Obligations and Responsibilities

4.1 Inspections and Repairs

Inspections of the area of Building 7689 will be conducted and documented on a semi-annual basis, as identified below:

- Inspection of the cap to ensure that no damage has occurred that would affect its ability to minimize the leaching of perchlorate from underlying soil
- Inspection of the signage adjacent to the cap to determine whether signs are still present and legible
- Inspection of Building 7689 to ensure that soil formerly covered by the building remains covered by the building or other impermeability cap.

ADEM will be notified within 10 days after uses inconsistent with the EUR are identified.

Activities will be taken to maintain the integrity of the cap as needed. Maintenance activities include repair of any disturbance or breach of the impermeable cover. Repairs to the warning signs will also be completed on an as-needed basis. The frequency of inspections will be scaled back to once per year, once conditions of the cap have stabilized over a minimum period of two years.

4.2 Monitoring

An annual CMI effectiveness report will be submitted to ADEM, either as a separate report or as part of another report for the site, or combined with other site annual monitoring reports submitted to ADEM. This report will document the inspections and identify the status of the

EUR and how any deficiencies or inconsistent uses have been addressed. The annual evaluation will address whether the use restrictions and controls referenced previously were communicated in the deed(s), the owners and state and local agencies were notified of the use restrictions and controls affecting the property, and use of the property has conformed with such restrictions and controls. The report will include a copy of the inspection forms, any violations noted, and recommendations for any changes to the EUR.

4.3 Notices

Notice regarding any observed changes in use, identified proposed changes in use, applications for building permit, or proposals for site work inconsistent with the EUR will be provided to ADEM as part of the annual monitoring report. RSA shall notify ADEM at least 90 days in advance of the proposed closing on any sale or other conveyance of any interest in any or all of the Property, in accordance with ADEM Memorandum #304.

FIGURE

Figure J-1

RSA-204
Environmental Use Restriction Boundary

Redstone Arsenal
Madison County, Alabama
Contract No. W91ZLK-09-D-0006

H:\Redstone\GIS_Documents\Project_maps\RSA_204\RSA_204_CMIP_May2016\RSA_204_Envir_Use_Restrict_Bndry_J_1.mxd

ATTACHMENT 1

NOTICE OF ENVIRONMENTAL USE RESTRICTIONS

THIS NOTICE REQUIRED BY THE ALABAMA DEPARTMENT OF ENVIRONMENTAL MANAGEMENT

STATE OF ALABAMA)
)
MADISON COUNTY)

NOTICE OF ENVIRONMENTAL USE RESTRICTIONS

WHEREAS, the UNITED STATES OF AMERICA is the owner of certain property commonly referred to as RSA-204, located on Redstone Arsenal, located in Madison County, AL, more particularly described in Attachment A, attached hereto and incorporated herein by reference as though fully set forth (hereinafter referred to as "the Property"); and

WHEREAS, implementation of environmental response actions has achieved, or is expected to achieve, risk-based clean-up levels deemed protective of human health and the environment, based on certain future uses of the Property, that will limit exposure to chemicals of concern; and

WHEREAS, the purpose of this Notice is to promote protection of human health and the environment by giving notice of the restriction described in PERMIT No. AL7 210 020 742 and the Corrective Measures Implementation Work Plan, RSA-204, Oxidizer Facility, Building 7691, Operable Unit 10 (CB&I, 2016); that are a component of the environmental response action and are designed to limit use of the property to those that are protective of human health and the environment; and

WHEREAS, further information concerning the environmental response actions may be obtained by contacting:

Chief, Land Division
Alabama Department of Environmental Management
1400 Coliseum Boulevard
Montgomery, Alabama
36110 (334) 271-7700

NOW, THEREFORE, for the protection of human health and the environment, Redstone Arsenal on behalf of the United States of America, hereby gives notice that the Corrective Measures Implementation Work Plan, RSA-204, Oxidizer Facility, Building 7691, Operable Unit 10 (CB&I, 2016); contains the restrictions applicable to the Property as set forth below:

1. Use Restrictions:

   a. Excavation or other activities that would disturb the impermeable cap adjacent to Building 7689 are prohibited, unless conducted with appropriate health and safety precautions. If such activities are conducted, the cover must be restored upon completion of the work.

   b. The area of the cap will be identified with signage prohibiting digging without approval of Chief, Installation Restoration Branch within the Environmental Management Division.

   c. Soil currently covered by Building 7689 must remain covered with the building, or other impermeable covering unless soil confirmation sampling demonstrates that perchlorate concentrations are below the 1.7 milligrams per kilogram cleanup goal.

   d. The Army shall monitor and report on the presence and effectiveness of environmental use restrictions and controls annually.

   e. The LUCs shall be maintained until the concentrations of hazardous substances at RSA-204 are at levels suitable for unrestricted use and exposure, and a permit modification, in accordance with Permit Condition l.J, to remove the LUCs is submitted to the Department for review and approval.

2. Modifications. This Notice will remain in effect unless modified or terminated. This Notice shall not be modified or terminated without the prior written approval of the ADEM.

3. Conveyances. Redstone Arsenal agrees to execute an Environmental Covenant pursuant to § 35-19-1, Code of Alabama, as amended, at the time any of the Property (as described in Attachment A) is conveyed in fee simple to any entity or person that is not an agency, department, or instrumentality of the United States of America.

4. Property Interest. This Notice does not transfer, dispose of, or in any way alienate any real property interest held by the United States in the Property and the filing of this Notice does not transfer to, relinquish to, or in any way create any real property interest in any third party.

5. Filing. The Notice is incorporated into the installation master plan or facility property management plan and is recorded into the land records of the property.

IN WITNESS WHEREOF, This Notice of Environmental Use Restrictions is given by Redstone Arsenal on this the _____ day of _____, 20__.

By:_____
Thomas P. Holliday, Jr
COL/MI
Commanding

STATE OF ALABAMA
MADISON COUNTY

ACKNOWLEDGEMENT

I, the undersigned Notary Public in and for said County and State, hereby certify that _____, whose name is signed to the foregoing Notice, and who is known to me, acknowledged before me this day that, being informed of the contents of the Notice, he executed the same voluntarily on the day the same bears date.

Given under my hand and official seal this ___ day of _____, 20 .

_____
S*E*A*L* Notary Public

My Commission expires: _____

ALABAMA DEPARTMENT OF ENVIRONMENTAL MANAGEMENT

This Notice of Environmental Use Restrictions has been approved by and registered with the Alabama Department of Environmental Management this _____ day of _____, 20 .

By: _____

Chief, Land Division
Alabama Department of Environmental Management
ATTACHMENT "A"

APPENDIX K

LONG-TERM MONITORING PLAN

Long-Term Monitoring Plan
RSA-204, Oxidizer Facility, Building 7691
Operable Unit 10
U.S. Army Garrison-Redstone
Madison County, Alabama
EPA ID No. AL7 210 020 742

Prepared for:

Mission & Installation Contracting Command
ATTN: MICC Center – FSH
2107 17th Street
Building 4197, Suite 15
Fort Sam Houston, Texas 78234-5015

Prepared by:

CB&I Federal Services LLC
2410 Cherahala Boulevard
Knoxville, Tennessee 37932

Contract No. W91ZLK-09-D-0006
CB&I Project No. 147104
Task Order 0008

September 2016

Table of Contents

Page

List of Tables ii
List of Figures ii
List of Attachments ii
1.0 Introduction 1
2.0 RSA-204 Site Description 1
2.1 Overview 1
2.2 Site History 3
2.3 Site Description and Topography 3
2.4 Geology 3
2.5 Groundwater 4
3.0 Groundwater Monitoring Program 4
3.1 Objectives 4
3.2 Proposed Monitoring Wells 5
3.3 Constituent List and Sampling Frequency 6
3.4 Sampling and Analytical Protocol 6
3.5 Quality Assurance/Quality Control 7
4.0 Data Evaluation and Reporting 8
4.1 Data Evaluation and Interpretation 8
4.2 Reporting 9
5.0 Monitoring Well Maintenance Plan 10
5.1 Well Redevelopment 10
5.2 Well Replacement or Closure 11
5.3 Well Inspections 11
6.0 Engineered Cap and Land Use Control Inspections 11
7.0 References 12
Tables

List of Tables

Table	Title	Follows Tab
3-1	Sampling Locations and Methods	
3-2	Field Quality Control Summary	

List of Figures

Figure	Title	Follows Tab
K-1	RSA-204 Long Term Monitoring Locations for Groundwater	

List of Attachments

Attachment 1 - Engineered Cap and Land-Use Control Inspection Checklist

1.0 Introduction

This long-term monitoring (LTM) plan has been developed in support of the RSA-204 corrective measures implementation (CMI) work plan. This document provides details for implementation of long-term groundwater monitoring and semi-annual engineered cap and land-use control (LUC) inspections. Groundwater monitoring will be completed to evaluate the effectiveness of the corrective measures in treatment of contaminated groundwater under RSA-204 to achieve the cleanup goals. This plan includes identification of wells scheduled for monitoring, the monitoring period, analytical methods, and records maintenance. Provisions for completing semi-annual inspections of the engineered cap adjacent to Building 7689 and for documenting compliance with LUCs also included in this LTM plan.

The corrective measures to be implemented at RSA-204 include excavation and off-site disposal of perchlorate-contaminated soil, a localized cap on the east side of Building 7689 where perchlorate-contaminated soil cannot be accessed and excavated, and implementation of LUCs in the vicinity of Building 7689. In addition, groundwater will be treated using a combination of in situ enhanced bioremediation (ISEB) and monitored natural attenuation (MNA) followed by long-term monitoring.

Objective and Scope

The primary objective of this LTM plan for RSA-204 is to monitor chemicals of concern (COC) (perchlorate, trichloroethene [TCE], 2-nitrotoluene, 2,6-dinitrotoluene, and RDX) in groundwater following implementation of soil and groundwater corrective measures and monitor future protectiveness of human health and the environment by ensuring the LUCs and the engineered cap remain in place.

This groundwater monitoring portion of this plan is designed to be easily modified, if necessary, in response to new hydrologic or geochemical data or changes in remedial, hydrologic, technical, or land-use conditions. Recommendations for changes to the groundwater monitoring program will be documented in annual CMI effectiveness reports produced by the Army.

2.0 RSA-204 Site Description

2.1 Overview

RSA-204 was an oxidizer facility occupying approximately 8.5 acres in the southeastern portion of Redstone Arsenal (RSA) in Test Area 10 (CMI work plan Figure 1-1). The site is located in the former Thiokol Corporation (Thiokol) North Plant area, within the northwestern portion of the RSA-146 groundwater unit. The site includes existing Buildings 7687, 7688, 7689, 7690, and

7691, which the Army constructed in 1978 to support Thiokol operations for rocket motor support activities (CMI work plan Figure 1-2).

Environmental investigations were conducted at RSA-204 to determine the nature and extent of contamination. Phase I and II environmental baseline surveys were performed in the area around buildings at RSA-204 in 1996 and 1998 (Conestoga-Rovers and Associates, 1996; CH2M Hill, 1998). From 1997 through 2003, soil and groundwater sampling was conducted in the area of RSA-204 as part of soil and groundwater investigations in Operable Unit 10 (Shaw, 2008; IT Corporation, 1998; 1999; 2001; 2002). Confirmation soil sampling was conducted in 2003 at two temporary storage areas within RSA-204 (RSA-180 and RSA-181) (Bhate Environmental Associates, Inc., 2003). Potential source area sampling was conducted around Building 7687 in 2004 (Shaw Environmental, Inc. [Shaw], 2005). Groundwater has also been monitored within the RSA-204 site boundary as part of the RSA-146 groundwater site investigation since 2008 (CB&I Federal Services LLC [CB&I], 2015). The RSA-204 Resource Conservation and Recovery Act (RCRA) facility investigation was completed in 2012 (Shaw, 2013a) and approved by the Alabama Department of Environmental Management (ADEM) on March 4, 2014.

Available analytical results indicate historical disposal activities have led to localized contamination of the subsurface soil and groundwater. This mainly includes perchlorate in subsurface soil and perchlorate, 2-nitrotoluene, 2,6-dinitrotoluene, RDX, and TCE in groundwater.

The site falls geographically within the RSA-146 groundwater unit, which also encompasses other surface sites within the southeast area of RSA; however, groundwater contamination at RSA-204 will be addressed in conjunction with the RSA-204 surface media site.

The evaluations of human health risk and contaminant fate and transport indicate that perchlorate-contaminated soil poses an ongoing leaching threat to groundwater and that future potable use of groundwater would potentially pose an unacceptable threat to human health due to the concentrations of perchlorate, TCE, and three explosive compounds. The corrective measure objectives for RSA-204 are to prevent/control sourcing to groundwater from perchlorate in soil and to reduce perchlorate, TCE, and explosive compound concentrations to levels determined to be within acceptable ranges for human exposure.

Further information on RSA-204 can be obtained from the RFI report (Shaw, 2013a) and corrective measures study (CB&I, 2016).

2.2 Site History

The site includes existing Buildings 7687, 7688, 7689, 7690, and 7691, which the Army constructed in 1978 to support Thiokol operations. The buildings located within the RSA-204 site and their former functions are described as follows:

- Building 7687, oxidizer service (storage) building
- Building 7688, Class-1.1 nitramine drying facility
- Building 7689, ammonium perchlorate grinding facility
- Building 7690, nitramine grinding facility
- Building 7691, ammonium perchlorate processing facility.

Oxidizer was received at the service building (Building 7687), and explosives were dried at Building 7688. The oxidizer and explosives were transported to the grinding and processing facilities (Buildings 7689, 7690, and 7691), where they were screened and ground. Following processing, the oxidizer powder was transported to nearby mixing facilities. The entire operation was deactivated between 1993 and 1996. Nine no-further-action sites lie within RSA-204 (CMI work plan Figure 1-1).

2.3 Site Description and Topography

RSA-204 is located in the western portion of the former Thiokol North Plant area. The North Plant lies in the southeastern portion of RSA (CMI work plan Figure 1-1). RSA-204 is located south of Eagle Road, between Magazine and Falcon Roads, and consists of partially maintained grass, wooded areas, earthen blast berms, buildings, steam lines, and paved areas (CMI work plan Figure 1-2). A small, east-west-trending ephemeral drainage ditch is located at the southeastern boundary of the site and is included within the RSA-204 investigation boundary. Topographic relief within the former Thiokol North Plant area is minimal, due in part to leveling during construction of the industrialized area. Topography across the site is relatively flat with the exception of the earthen blast berms. The elevations range between approximately 571.5 and 602 feet above mean sea level. No portion of the RSA-204 site lies within the 100-year floodplain.

2.4 Geology

The lithological logs from soil and well borings indicate native soils consisting predominantly of medium- to high-plasticity clay with trace-to-small amounts of silt and fine-grained sand. Intervals of chert and chert fragments increase with depth and represent residual deposits formed by in situ chemical weathering of chert nodules and layers within the limestone bedrock. Based on auger refusal, thickness of the residual soils (overburden) ranges from approximately 20 to 38 feet, slightly shallower than the range of overburden thickness observed throughout this portion of RSA.

2.5 Groundwater

Groundwater beneath RSA-204 occurs in the unconsolidated overburden and upper portion of the carbonate bedrock, primarily as a single interconnected aquifer. The water table across RSA-204 and the larger RSA-146 groundwater unit is generally flat, mimicking local topography. Average depth to groundwater in overburden and interface wells in proximity to RSA-204 fluctuates seasonally, ranging from approximately 6.5 to 23 feet below ground surface.

3.0 Groundwater Monitoring Program

The long-term groundwater monitoring program for RSA-204 includes wells proposed for monitoring, sampling frequency and sampling parameters, sampling and analytical protocol, and quality assurance (QA)/quality control (QC) requirements. The laboratory-specific reference limits and evaluation tables are presented in the installation-wide (IW) quality assurance program plan (QAPP), Volume 1, Worksheet No. 15, and Attachment 2a (Shaw, 2013b). Site-specific information listing the analyses to be performed and other analytical requirements are presented in Tables 3-1 and 3-2 of this LTM plan. LTM is proposed for 30 years for the RSA-204 site. Note that only Years 1 through 3 are planned in this LTM plan. It is anticipated that LTM for Year 4 may be slightly different than what is proposed here and can be adjusted in the recommendations section of the annual LTM report for Year 3.

3.1 Objectives

Long-term groundwater monitoring will be performed to evaluate the treatment performance of the groundwater resulting from the ISEB and MNA. The monitoring data will also be used to ensure that perchlorate is not continuing to leach from RSA-204 soils to groundwater after the soil excavation and localized capping of perchlorate-contaminated corrective measures. Baseline groundwater sampling at 26 monitoring wells within the treatment area will be performed during preliminary CMI activities (CMI work plan Section 4.3).

The monitoring program is designed to maximize cost-effectiveness without compromising program and data quality using the following general strategies:

- Select and maintain a minimized number of sampling points and an appropriate analytical suite to evaluate the progress of MNA in groundwater.
- Choose wells that act as location triggers to plume movement, are located to access progress in achieving the groundwater cleanup goals, and have the highest probability of detecting potential contaminants leaching from RSA-204 soils to groundwater.
- Maintain surveillance for contaminant migration away from RSA-204.

- Minimize frequency of conventional and/or mainstream sampling programs.
- Utilize less-expensive analytical programs instead of conventional and/or mainstream sampling programs.
- Initiate a streamlined data management and reporting information system.

3.2 Proposed Monitoring Wells

The following existing wells at RSA-204 are scheduled for LTM (Figure K-1):

Location	Zone	Rationale for Inclusion
K-RS690	Overburden	Monitor explosives concentrations
K-RS691	Interface	Monitor perchlorate and explosives concentrations along the eastern plume fringe
K142-RS1223	Interface	Monitor explosive concentrations
K204-RS1550	Overburden	Monitor TCE and explosives east of Bldg 7687
204-RS2027	Interface	Monitor TCE/perchlorate downgradient
204-RS2029	Interface	Monitor perchlorate; fringe of Treatment Area 2
204-RS2030	Interface	Monitor upgradient perchlorate and explosives concentrations
204-RS2031	Interface	Monitor perchlorate; upgradient
204-RS2032	Interface	Monitor perchlorate; fringe of Treatment Area 2
204-RS2033	Interface	Monitor explosives concentrations
204-RS2034	Interface	Monitor TCE/perchlorate; downgradient
204-RS2668	Bedrock	Monitor perchlorate; downgradient
204-RS2670	Bedrock	Monitor perchlorate; between Treatment Areas 1 and 2
204-RS2672	Interface	Monitor perchlorate; upgradient
204-RS2673	Interface	Monitor perchlorate; fringe of Treatment Area 1
204-RS2674	Interface	Monitor perchlorate; fringe of Treatment Area 1
204-RS2675	Overburden	Monitor perchlorate; between Treatment Areas 1 and 2
204-RS2676	Overburden	Monitor perchlorate; between Treatment Areas 1 and 2
204-RS2677	Overburden	Monitor perchlorate; fringe of Treatment Area 2
204-RS2678	Overburden	Monitor perchlorate; fringe of Treatment Area 2
204-RS2683	Overburden	Monitor TCE and perchlorate; downgradient
204-RS2791	Interface	Monitor perchlorate; source of Treatment Area 1
204-RS2792	Bedrock	Monitor perchlorate; source of Treatment Area 1
204-RS2793	Interface	Monitor perchlorate; source of Treatment Area 2
204-RS2794	Bedrock	Monitor perchlorate; source of Treatment Area 2
204-RS2824	Interface	Proposed well; monitor TCE/perchlorate in downgradient area of the site

Well locations included in the LTM program were selected based on their proximity to the plume and their locations with respect to the apparent transport direction of the perchlorate plume, which is from the south-southeast to the north-northwest. Both overburden/interface and shallow bedrock wells were included to monitor downgradient, plume source, cross-gradient plume

fringe, and upgradient areas of the site. Additionally, wells K-RS690, 204-RS2683, and K204-RS1550, where isolated hotspots for TCE or explosives were found, are also included in the monitoring program. All proposed monitoring wells will be sampled for TCL VOCs, perchlorate, explosives, water quality and MNA parameters, as presented in Table 3-1. Recommendations for additional well closure will be included in the annual CMI effectiveness reports, as appropriate.

3.3 Constituent List and Sampling Frequency

Based on the human health risk assessment, the following COCs are to be monitored as part of the corrective measures: perchlorate, TCE, 2-nitrotoluene, 2,6-dinitrotoluene, and RDX. The performance monitoring analytical program will consist of the following:

- Volatile organic compounds
- Perchlorate
- Explosives
- Total and dissolved metals (manganese, arsenic, iron, and chromium)
- Dissolved gases (methane, ethane, ethane, and acetylene)
- Anions (nitrate and sulfate)
- Total iron
- Total organic carbon, and
- Alkalinity.

Total organic carbon will provide an indicator of the remaining emulsified vegetable oil (i.e., organic carbon) available for a microbial food source that is remaining in the aquifer. In addition, water quality parameters will be monitored, including pH, temperature, conductivity, oxidation-reduction potential, dissolved oxygen, and turbidity. Water levels will also be measured during each sampling event. This monitoring program will be used to evaluate progress toward meeting the corrective measure objective for groundwater and the cleanup goals. The analytical program will monitor for COCs in groundwater as well as for additional analytes to track progress of the ISEB treatment and MNA.

In order to meet the objectives of this LTM plan, LTM groundwater sampling will be conducted quarterly for the first year following the first round of injections and groundwater will continue to be monitored on a semiannual basis for the next two years. After three years, LTM is planned to continue until it is demonstrated that the CGs have been achieved (e.g., annually until Year 30).

3.4 Sampling and Analytical Protocol

All data will be collected, stored, and managed in accordance with the requirements defined by the IW QAPP (Shaw, 2013b) and the installation-wide safety and health plan (Shaw, 2003).

Because anaerobic biodegradaton of site-related COCs has the potential to generate methane, the sampling technician will monitor for combustible gases when opening monitoring well casings for sampling events.

The sampling technician will measure and record physical parameters of the groundwater during well purging to help determine when the well is ready to be sampled. Complete and accurate records in the groundwater well development/purge log are necessary in order to ensure accurate groundwater samples are being collected. Samples will be analyzed using U.S. Environmental Protection Agency (EPA) SW-846 methods as presented in the IW QAPP (Shaw, 2013b).

The laboratory will provide sample containers. Sample containers are purchased precleaned and treated according to EPA specifications for the methods. Sample containers are not reused. Containers are stored in clean areas to prevent exposure to fuels, solvents, and other contaminants. The required sample containers for the analysis of constituents in groundwater at RSA-204 are provided in Table 3-2. Sample volumes, preservation requirements, and holding times for the analytical methods performed on groundwater samples are also listed in Table 3-2.

Sample preservation, packaging, and shipping will follow the procedures as specified in Standard Operating Project Procedure No. 15, *Non-Hazardous Sampling Handling, Packaging, and Shipping,* in the IW QAPP (Shaw, 2013b).

Completed analysis request/chain-of-custody records will be secured and included with each shipment of coolers to the contracted laboratory.

Recommendations to modify the groundwater monitoring plan will be made in the annual CMI effectiveness reports.

3.5 Quality Assurance/Quality Control

Groundwater media will be sampled and analyzed to meet the objectives of the performance monitoring plan. QA/QC samples will be collected for all sampling events in accordance with requirements established in the IW QAPP (Shaw, 2013b) to assure long-term comparability of data. Samples will be analyzed by EPA-approved SW-846 methods of analysis where applicable, comply with EPA definitive data requirements, and reported using both hard copy and electronic data packages.

The chemical data will be reported via hard-copy packages by the laboratory using Contract Laboratory Program-like forms, in addition to electronic deliverables, and will include all raw analytical and QC data for each analysis.

All sample preparation and analysis shall be completed within the method-required holding times specified in Table 3-2. The holding time of a sample begins at the time of sample collection. If holding times are exceeded and the analyses are performed, the results shall be flagged accordingly.

4.0 Data Evaluation and Reporting

4.1 Data Evaluation and Interpretation

Groundwater monitoring will commence after the first round of reagent injections has been conducted. The schedule for the first year will consist of sampling approximately 30 days, 120 days, 210 days, and 300 days after the first injection round. Replacement wells installed following the completion of excavation activities will be added to the next scheduled sampling event following their installation and development. Samples will be collected from the 26 groundwater monitoring wells in and around the treatment area as shown on Figure K-1. The samples will be collected using low-flow purging and sampling techniques. The long-term groundwater monitoring samples will be analyzed for the same analytes and field parameters as the baseline sampling event.

The data collected from the baseline groundwater sampling and the quarterly first-year sampling events following the first injection round will be used to plan the second round of injections. A second round of direct-push technology injections is planned approximately 1 year after the initial emulsified vegetable oil solution injection round to address any remaining residual hot spots or perchlorate rebound areas within the treatment areas. The sampling frequency during this second year as well as the third year will be semiannual. Groundwater sampling in years 4 through 30 (anticipated to be the end of the corrective measures) will be conducted annually.

The primary objective of the groundwater monitoring program for RSA-204 is to determine whether the corrective measures reduce COC concentrations in groundwater beneath the site to levels determined to be acceptable to human health (i.e., cleanup goals). This will be determined based on the results of a statistical test or other methods. Statistical analysis will follow ADEM Administrative Code 335-14-5-.06(8)(h) and EPA guidance for groundwater monitoring at RCRA facilities (EPA, 1989; 1992; 2009).

As allowed under these regulations, data from eight groundwater sampling rounds (years 1 through 3) will be used to calculate nonparametric 95 percent upper tolerance limits or 95 percent upper prediction limits for the site COCs. These values will be calculated separately for the overburden and bedrock groundwater zones. Groundwater data collected during subsequent sampling events will be compared to these values. COCs that exceed these values

may be subjected to additional analysis as allowed in ADEM Administrative Code 335-14-5-.06(8)(h). The additional analyses may include, for example, control charts, Wilcoxon rank sum tests, box plots, and/or temporal trend analysis, as appropriate. Specific evaluation techniques will depend upon the detection frequencies and statistical distributions of each COC. For example, one COC concentration at a given well may exceed the site-specific upper tolerance limit or upper prediction limit, and that could be either a random occurrence or indicative of an increasing trend. Trend analysis will indicate if a trend is present and whether it has statistical significance.

Well data sets that pass statistical comparison tests (i.e., wells that do not demonstrate statistically significant increases over baseline concentrations) for all COCs will be sampled on an annual basis, in accordance with planned activities. Wells that fail statistical comparison tests for one or more COCs will be resampled. Following the collection of these additional data, statistical evaluation will again be performed and reported, along with recommendations for adjustment to sampling frequency, if appropriate.

Non-statistical methods may also be used to characterize RSA-204 groundwater conditions and may include the following:

- ***Hydrographs.*** Graphs of water levels versus time may be constructed to determine increases, decreases, seasonal, or man-made fluctuations in groundwater levels.
- ***Potentiometric Surface Maps.*** Depths to groundwater from multiple wells may be used to construct potentiometric surface contour maps and to estimate flow directions.
- ***Concentration-versus-Time Plots.*** Graphs of COC concentrations versus time at each well will be constructed for each data set subjected to trend analysis. This supports the identification of trends and helps determine if concentration changes are related to changes in water level, changes in groundwater flow directions, or natural attenuation.
- ***Plume Maps.*** Maps depicting the physical distribution of chemical constituents will aid in determining movement of plumes.
- ***Geochemical Evaluation.*** For inorganic constituents that fail statistical comparison tests, geochemical evaluation may be performed to determine which concentrations may be naturally elevated and which concentrations may have a contaminant source.

4.2 Reporting

Based on the proposed sampling schedule, an annual CMI effectiveness report will be prepared after four quarters of data collection for the first year of the LTM and then after two semiannual

data collection events for the following two years to demonstrate the effectiveness and success of the final corrective action program for RSA-204 groundwater. The effectiveness report will be compliant with provisions of the ADEM Administrative Code Rule 335-14-5-.06(10), which states that a compliance monitoring program must be implemented encompassing the extent of the contaminant plumes, and be maintained as long as necessary to achieve compliance with the CGs. The annual report will discuss the most recent sampling events and relate the findings as they pertain to treatment performance for the groundwater contaminants. The groundwater flow rate and direction in the overburden/interface zone will be determined annually and the data and maps will be included in effectiveness report pursuant to ADEM AAC Rule 335-14-5-.06(10)(e). The RSA-204 compliance monitoring program will address provisions for determining whether there is statistically significant evidence of increased contamination for any chemical parameter or hazardous constituent pursuant to ADEM AAC Rule 335-14-5-.06(10)(d) and ADEM AAC Rule 335-14-5-.06(10)(f).

Recommendations for changes to the sampling frequency, wells sampled, and parameters for analysis, if appropriate, will be included in the reports. At a minimum, the groundwater monitoring report will include a discussion of sampling activities, tables, and maps to document contaminant concentrations in groundwater, and an evaluation of the groundwater contaminant data. Other recommendations may include installation of additional monitoring wells and resampling for verification of sampling results. Record keeping for data and reports are described in the installation-wide QAPP (Shaw, 2013b).

5.0 Monitoring Well Maintenance Plan

In order to maintain consistent data quality and track contaminant concentrations and migration, the wells at RSA-204 will have to be maintained and/or replaced, as necessary. This chapter presents the well maintenance plan for these monitoring wells. Further details are presented in the IW QAPP (Shaw, 2013b).

5.1 Well Redevelopment

Wells may be redeveloped prior to sampling if any of the following conditions are exhibited at the well:

- Sediment accumulation in the well covers more than 5 percent of the total length of the well screen.
- Turbidity of groundwater is greater than 20 nephelometric turbidity units after the well has been purged prior to sampling.

- Recharge rate to the well has declined through time (e.g., recharge rates have declined to less than 60 percent of the recharge rate recorded in the initial development).

5.2 Well Replacement or Closure

If, after two episodes of redevelopment, the well still does not meet the requirements set forth in Section 5.1, the well may be deemed nonfunctional and scheduled for replacement or closure. Consultation with RSA personnel, technical consultants, or ADEM staff may be made, if appropriate, to determine if closure or replacement is indeed necessary. The procedures for well replacement or closure are outlined in the IW QAPP (Shaw, 2013b).

5.3 Well Inspections

Site inspections will be performed to help ascertain the condition of monitoring wells and confirm the integrity of the monitoring wells has not been compromised. Wells will be inspected during each sampling event. All monitoring wells in the monitoring well program will be sampled annually, at a minimum. The groundwater monitoring wells at the site will be inspected for the integrity of the following:

- Locks
- Locking cap
- Protective casing
- Bollards (stick-up wells only)
- Concrete pad.

Each site inspection will be documented. Deficiencies will be documented and corrected as soon as practical, but not less than annually. If a well cannot be properly repaired, it should be replaced or closed.

6.0 Engineered Cap and Land Use Control Inspections

RSA will perform inspections on a semiannual basis to ensure continued integrity of the remedy. General site inspections of the localized cap at Building 7689 shall be conducted semiannually to ensure that the integrity of the engineered cover is maintained and to ensure that land use remains appropriately restricted per the environmental restriction.

- Inspections will consist of a complete walkthrough and visual inspection of the cap area.

- The capped area will be covered with concrete and adjacent areas are the responsibility of the RSA operations and maintenance staff to mow and maintain.

- Repair of a disturbance or breach of the cap shall be initiated within 10 days of identifying the need for such repairs.

- Repairs to the warning signs shall be completed as needed and initiated within 10 days of identifying the need for such repairs. Prior to modifications in the frequency of inspection, the Army will submit a request to ADEM for review and approval.

The frequency of inspections can be scaled back to once per year, once conditions of the cap have stabilized over a minimum period of two years. The cap and LUC inspection form is included as Attachment 1 to this LTM Plan. Completed cap and LUC inspection forms will be included in the CMI effectiveness reports. Prior to modifications in the frequency of inspection the Army will submit a request to ADEM for review and approval.

7.0 References

Bhate Environmental Associates, Inc. (Bhate), 2003, ***Draft Confirmatory Sampling Report, Solid Waste Management Units (85, 86, 158, 159, 160, 161, 162, 163, 164, 165, 166, 167, 168, 169, 170, 171, 172, 173, 174, 175, 176, 177, 178, 179, 180, 181, and 182), Redstone Arsenal Huntsville, Alabama***, April.

CB&I Federal Services LLC (CB&I), 2016, ***Final Revision 1 Corrective Measures Study Report, RSA-204, Oxidizer Facility, Building 7691, Operable Unit 10, U.S. Army Garrison-Redstone, Madison County, Alabama,*** July.

CB&I Federal Services LLC (CB&I), 2015, ***Revision 1 RSA-146 Groundwater Site, Groundwater Unit GW-02, RCRA Facility Investigation Report, Redstone Arsenal, Madison County, Alabama***, December.

CH2M Hill, 1998, ***Draft Final Report of Findings, RARE North Plant Phase II EBS, Redstone Arsenal, Madison County, Alabama***, prepared for the U.S. Army Corp of Engineers, Mobile District, Mobile, Alabama, April.

Conestoga-Rovers & Associates, 1996, ***Phase I Environmental Baseline Study, Redstone Arsenal Rocket Engine Facility North Plant, Madison County, Alabama***, prepared for Thiokol Corporation, November.

IT Corporation, 2002, ***Draft-Final Site-Specific Work Plan, Phase II Remedial Investigation, Operable Unit 10, Revision 1, Redstone Arsenal, Madison County, Alabama***, prepared for the U. S. Army Corps of Engineers, Savannah District, Savannah, Georgia, April.

IT Corporation, 2001, ***Site-Specific Work Plan, Phase II Remedial Investigation, Operable Unit 10, Redstone Arsenal, Madison County, Alabama***, prepared for the U.S. Army Corps of Engineers, Savannah District, Savannah, Georgia, April.

IT Corporation, 1999, ***Draft Addendum to the Site-Specific Field Sampling Plan, Phase II and Offsite Remedial Investigation, Operable Unit 10, Redstone Arsenal, Madison County, Alabama***, prepared for the U. S. Army Corps of Engineers, Savannah District, Savannah, Georgia, April.

IT Corporation, 1998, ***Site-Specific Field Sampling Plan Attachment, Operable Unit 10, Redstone Arsenal, Madison County, Alabama***.

Shaw Environmental, Inc. (Shaw), 2013a, ***RCRA Facility Investigation Report, RSA-204, Oxidizer Facility, Building 7691, Operable Unit 10, U.S. Army Garrison-Redstone, Madison County, Alabama***, November.

Shaw Environmental, Inc. (Shaw), 2013b, ***Revision 2, Installation-Wide Quality Assurance Program Plan for the Program Management Contract, Volume I and Volume II, U.S. Army Garrison-Redstone, Madison County, Alabama***, September.

Shaw Environmental, Inc. (Shaw), 2008, ***Final RSA-146 Phase I Remedial Investigation Report, Redstone Arsenal, Madison County, Alabama***, prepared for U.S. Army Corps of Engineers, Savannah District, Savannah, Georgia, April.

Shaw Environmental, Inc. (Shaw), 2005, ***Draft RSA-146 Potential Source Area Investigation, Redstone Arsenal, Madison County, Alabama***, prepared for the U.S. Army Corps of Engineers, Savannah District, Savannah, Georgia, January.

Shaw Environmental, Inc. (Shaw), 2003, ***Draft Final Installation-Wide Safety and Health Plan, Revision 2, and Draft Final Installation-Wide Ordnance and Explosives Management Plan Revision 5, Redstone Arsenal, Madison County, Alabama***, prepared for the U.S. Army Corps of Engineers, Savannah District, Savannah, Georgia, July.

U.S. Environmental Protection Agency (EPA), 2009, ***Statistical Analysis of Groundwater Monitoring Data at RCRA Facilities: Unified Guidance***, EPA/530/R-09/007, Office of Resource Conservation and Recovery Program Implementation and Information Division, March.

U.S. Environmental Protection Agency (EPA), 1992, ***Statistical Analysis of Groundwater Monitoring Data at RCRA Facilities, Addendum to Interim Guidance***, Office of Resource Conservation and Recovery, July.

U.S. Environmental Protection Agency (EPA), 1989, ***Statistical Analysis of Ground-Water Monitoring Data at RCRA Facilities, Interim Final Guidance***, Office of Solid Waste, Waste Management Division, EPA/530/SW-89/026, July.

TABLES

Table 3-1

Sampling Locations and Methods
RSA-204
Redstone Arsenal, Madison County, Alabama

Sample Location	Sample Designation	Sample Depth (ft bgs)	QA/QC Sample Designation		Analytical Suite
			FD*	MS/MSD*	
RSA-204 Well Sample Locations Year 1 Round 1					
K-RS690	K-RS690 -GW- AAR3084 -REG	NA			TCL VOC, Perchlorate, Explosives+, Dissolved Gases, T/D Mn, As, Fe, Cr, Nitrate, Sulfate, TOC, Alkalinity
K-RS691	K-RS691 -GW- AAR3085 -REG	NA			TCL VOC, Perchlorate, Explosives+, Dissolved Gases, T/D Mn, As, Fe, Cr, Nitrate, Sulfate, TOC, Alkalinity
K142-RS1223	K142-RS1223 -GW- AAR3086 -REG	NA		K142-RS1223-GW-AAR3086-MS/MSD	TCL VOC, Perchlorate, Explosives+, Dissolved Gases, T/D Mn, As, Fe, Cr, Nitrate, Sulfate, TOC, Alkalinity
K204-RS1550	K204-RS1550 -GW- AAR3087 -REG	NA			TCL VOC, Perchlorate, Explosives+, Dissolved Gases, T/D Mn, As, Fe, Cr, Nitrate, Sulfate, TOC, Alkalinity
204-RS2027	204-RS2027 -GW- AAR3088 -REG	NA			TCL VOC, Perchlorate, Explosives+, Dissolved Gases, T/D Mn, As, Fe, Cr, Nitrate, Sulfate, TOC, Alkalinity
204-RS2029	204-RS2029 -GW- AAR3089 -REG	NA			TCL VOC, Perchlorate, Explosives+, Dissolved Gases, T/D Mn, As, Fe, Cr, Nitrate, Sulfate, TOC, Alkalinity
204-RS2030	204-RS2030 -GW- AAR3090 -REG	NA			TCL VOC, Perchlorate, Explosives+, Dissolved Gases, T/D Mn, As, Fe, Cr, Nitrate, Sulfate, TOC, Alkalinity
204-RS2031	204-RS2031 -GW- AAR3091 -REG	NA			TCL VOC, Perchlorate, Explosives+, Dissolved Gases, T/D Mn, As, Fe, Cr, Nitrate, Sulfate, TOC, Alkalinity
204-RS2032	204-RS2032 -GW- AAR3092 -REG	NA			TCL VOC, Perchlorate, Explosives+, Dissolved Gases, T/D Mn, As, Fe, Cr, Nitrate, Sulfate, TOC, Alkalinity
204-RS2033	204-RS2033 -GW- AAR3093 -REG	NA			TCL VOC, Perchlorate, Explosives+, Dissolved Gases, T/D Mn, As, Fe, Cr, Nitrate, Sulfate, TOC, Alkalinity
204-RS2034	204-RS2034 -GW- AAR3094 -REG	NA	204-RS2034-GW-AAR3095-FD		TCL VOC, Perchlorate, Explosives+, Dissolved Gases, T/D Mn, As, Fe, Cr, Nitrate, Sulfate, TOC, Alkalinity
204-RS2668	204-RS2668 -GW- AAR3096 -REG	NA			TCL VOC, Perchlorate, Explosives+, Dissolved Gases, T/D Mn, As, Fe, Cr, Nitrate, Sulfate, TOC, Alkalinity
204-RS2670	204-RS2670 -GW- AAR3097 -REG	NA	204-RS2670-GW-AAR3098-FD		TCL VOC, Perchlorate, Explosives+, Dissolved Gases, T/D Mn, As, Fe, Cr, Nitrate, Sulfate, TOC, Alkalinity

Table 3-1

Sampling Locations and Methods
RSA-204
Redstone Arsenal, Madison County, Alabama

Sample Location	Sample Designation	Sample Depth (ft bgs)	QA/QC Sample Designation		Analytical Suite
			FD*	MS/MSD*	
204-RS2672	204-RS2672 -GW- AAR3099 -REG	NA			TCL VOC, Perchlorate, Explosives+, Dissolved Gases, T/D Mn, As, Fe, Cr, Nitrate, Sulfate, TOC, Alkalinity
204-RS2673	204-RS2673 -GW- AAR3100 -REG	NA			TCL VOC, Perchlorate, Explosives+, Dissolved Gases, T/D Mn, As, Fe, Cr, Nitrate, Sulfate, TOC, Alkalinity
204-RS2674	204-RS2674 -GW- AAR3101 -REG	NA		204-RS2674-GW-AAR3102-MS/MSD	TCL VOC, Perchlorate, Explosives+, Dissolved Gases, T/D Mn, As, Fe, Cr, Nitrate, Sulfate, TOC, Alkalinity
204-RS2675	204-RS2675 -GW- AAR3103 -REG	NA			TCL VOC, Perchlorate, Explosives+, Dissolved Gases, T/D Mn, As, Fe, Cr, Nitrate, Sulfate, TOC, Alkalinity
204-RS2676	204-RS2676 -GW- AAR3104 -REG	NA			TCL VOC, Perchlorate, Explosives+, Dissolved Gases, T/D Mn, As, Fe, Cr, Nitrate, Sulfate, TOC, Alkalinity
204-RS2677	204-RS2677 -GW- AAR3105 -REG	NA			TCL VOC, Perchlorate, Explosives+, Dissolved Gases, T/D Mn, As, Fe, Cr, Nitrate, Sulfate, TOC, Alkalinity
204-RS2678	204-RS2678 -GW- AAR3106 -REG	NA			TCL VOC, Perchlorate, Explosives+, Dissolved Gases, T/D Mn, As, Fe, Cr, Nitrate, Sulfate, TOC, Alkalinity
204-RS2683	204-RS2683 -GW- AAR3107 -REG	NA	204-RS2683-GW-AAR3108-FD		TCL VOC, Perchlorate, Explosives+, Dissolved Gases, T/D Mn, As, Fe, Cr, Nitrate, Sulfate, TOC, Alkalinity
204-RS2791	204-RS2791 -GW- AAR3109 -REG	NA			TCL VOC, Perchlorate, Explosives+, Dissolved Gases, T/D Mn, As, Fe, Cr, Nitrate, Sulfate, TOC, Alkalinity
204-RS2792	204-RS2792 -GW- AAR3110 -REG	NA			TCL VOC, Perchlorate, Explosives+, Dissolved Gases, T/D Mn, As, Fe, Cr, Nitrate, Sulfate, TOC, Alkalinity
204-RS2793	204-RS2793 -GW- AAR3111 -REG	NA			TCL VOC, Perchlorate, Explosives+, Dissolved Gases, T/D Mn, As, Fe, Cr, Nitrate, Sulfate, TOC, Alkalinity
204-RS2794	204-RS2794 -GW- AAR3112 -REG	NA			TCL VOC, Perchlorate, Explosives+, Dissolved Gases, T/D Mn, As, Fe, Cr, Nitrate, Sulfate, TOC, Alkalinity
204-RS2824	204-RS2824 -GW- AAR3113 -REG	NA			TCL VOC, Perchlorate, Explosives+, Dissolved Gases, T/D Mn, As, Fe, Cr, Nitrate, Sulfate, TOC, Alkalinity
IDW Water Samples					
204-SITE	204-SITE -WA- AAR9066 -REG	NA			TCL VOCs, Explosives+, Perchlorate
204-SITE	204-SITE -WA- AAR9067 -REG	NA			TCL VOCs, Explosives+, Perchlorate

Table 3-1

Sampling Locations and Methods
RSA-204
Redstone Arsenal, Madison County, Alabama

Sample Location	Sample Designation	Sample Depth (ft bgs)	QA/QC Sample Designation		Analytical Suite
			FD*	MS/MSD*	
204-SITE	204-SITE -WA- AAR9068 -REG	NA			TCL VOCs, Explosives+, Perchlorate
204-SITE	204-SITE -WA- AAR9069 -REG	NA			TCL VOCs, Explosives+, Perchlorate
RSA-204 Well Sample Locations Year 1 Round 2					
K-RS690	K-RS690 -GW- AAR3114 -REG	NA			TCL VOC, Perchlorate, Explosives+, Dissolved Gases, T/D Mn, As, Fe, Cr, Nitrate, Sulfate, TOC, Alkalinity
K-RS691	K-RS691 -GW- AAR3115 -REG	NA	K-RS691-GW-AAR3116-FD		TCL VOC, Perchlorate, Explosives+, Dissolved Gases, T/D Mn, As, Fe, Cr, Nitrate, Sulfate, TOC, Alkalinity
K142-RS1223	K142-RS1223 -GW- AAR3117 -REG	NA		K142-RS1223-GW-AAR3117-MS/MSD	TCL VOC, Perchlorate, Explosives+, Dissolved Gases, T/D Mn, As, Fe, Cr, Nitrate, Sulfate, TOC, Alkalinity
K204-RS1550	K204-RS1550 -GW- AAR3118 -REG	NA			TCL VOC, Perchlorate, Explosives+, Dissolved Gases, T/D Mn, As, Fe, Cr, Nitrate, Sulfate, TOC, Alkalinity
204-RS2027	204-RS2027 -GW- AAR3119 -REG	NA			TCL VOC, Perchlorate, Explosives+, Dissolved Gases, T/D Mn, As, Fe, Cr, Nitrate, Sulfate, TOC, Alkalinity
204-RS2029	204-RS2029 -GW- AAR3120 -REG	NA			TCL VOC, Perchlorate, Explosives+, Dissolved Gases, T/D Mn, As, Fe, Cr, Nitrate, Sulfate, TOC, Alkalinity
204-RS2030	204-RS2030 -GW- AAR3121 -REG	NA			TCL VOC, Perchlorate, Explosives+, Dissolved Gases, T/D Mn, As, Fe, Cr, Nitrate, Sulfate, TOC, Alkalinity
204-RS2031	204-RS2031 -GW- AAR3122 -REG	NA	204-RS2031-GW-AAR3123-FD		TCL VOC, Perchlorate, Explosives+, Dissolved Gases, T/D Mn, As, Fe, Cr, Nitrate, Sulfate, TOC, Alkalinity
204-RS2032	204-RS2032 -GW- AAR3124 -REG	NA		204-RS2032-GW-AAR3124-MS/MSD	TCL VOC, Perchlorate, Explosives+, Dissolved Gases, T/D Mn, As, Fe, Cr, Nitrate, Sulfate, TOC, Alkalinity
204-RS2033	204-RS2033 -GW- AAR3125 -REG	NA			TCL VOC, Perchlorate, Explosives+, Dissolved Gases, T/D Mn, As, Fe, Cr, Nitrate, Sulfate, TOC, Alkalinity
204-RS2034	204-RS2034 -GW- AAR3126 -REG	NA			TCL VOC, Perchlorate, Explosives+, Dissolved Gases, T/D Mn, As, Fe, Cr, Nitrate, Sulfate, TOC, Alkalinity
204-RS2668	204-RS2668 -GW- AAR3127 -REG	NA			TCL VOC, Perchlorate, Explosives+, Dissolved Gases, T/D Mn, As, Fe, Cr, Nitrate, Sulfate, TOC, Alkalinity
204-RS2670	204-RS2670 -GW- AAR3128 -REG	NA			TCL VOC, Perchlorate, Explosives+, Dissolved Gases, T/D Mn, As, Fe, Cr, Nitrate, Sulfate, TOC, Alkalinity

Table 3-1

Sampling Locations and Methods
RSA-204
Redstone Arsenal, Madison County, Alabama

Sample Location	Sample Designation	Sample Depth (ft bgs)	QA/QC Sample Designation		Analytical Suite
			FD*	MS/MSD*	
204-RS2672	204-RS2672 -GW- AAR3129 -REG	NA			TCL VOC, Perchlorate, Explosives+, Dissolved Gases, T/D Mn, As, Fe, Cr, Nitrate, Sulfate, TOC, Alkalinity
204-RS2673	204-RS2673 -GW- AAR3130 -REG	NA			TCL VOC, Perchlorate, Explosives+, Dissolved Gases, T/D Mn, As, Fe, Cr, Nitrate, Sulfate, TOC, Alkalinity
204-RS2674	204-RS2674 -GW- AAR3131 -REG	NA			TCL VOC, Perchlorate, Explosives+, Dissolved Gases, T/D Mn, As, Fe, Cr, Nitrate, Sulfate, TOC, Alkalinity
204-RS2675	204-RS2675 -GW- AAR3132 -REG	NA			TCL VOC, Perchlorate, Explosives+, Dissolved Gases, T/D Mn, As, Fe, Cr, Nitrate, Sulfate, TOC, Alkalinity
204-RS2676	204-RS2676 -GW- AAR3133 -REG	NA			TCL VOC, Perchlorate, Explosives+, Dissolved Gases, T/D Mn, As, Fe, Cr, Nitrate, Sulfate, TOC, Alkalinity
204-RS2677	204-RS2677 -GW- AAR3134 -REG	NA			TCL VOC, Perchlorate, Explosives+, Dissolved Gases, T/D Mn, As, Fe, Cr, Nitrate, Sulfate, TOC, Alkalinity
204-RS2678	204-RS2678 -GW- AAR3135 -REG	NA	204-RS2678-GW-AAR3136-FD		TCL VOC, Perchlorate, Explosives+, Dissolved Gases, T/D Mn, As, Fe, Cr, Nitrate, Sulfate, TOC, Alkalinity
204-RS2683	204-RS2683 -GW- AAR3137 -REG	NA			TCL VOC, Perchlorate, Explosives+, Dissolved Gases, T/D Mn, As, Fe, Cr, Nitrate, Sulfate, TOC, Alkalinity
204-RS2791	204-RS2791 -GW- AAR3138 -REG	NA			TCL VOC, Perchlorate, Explosives+, Dissolved Gases, T/D Mn, As, Fe, Cr, Nitrate, Sulfate, TOC, Alkalinity
204-RS2792	204-RS2792 -GW- AAR3139 -REG	NA			TCL VOC, Perchlorate, Explosives+, Dissolved Gases, T/D Mn, As, Fe, Cr, Nitrate, Sulfate, TOC, Alkalinity
204-RS2793	204-RS2793 -GW- AAR3140 -REG	NA			TCL VOC, Perchlorate, Explosives+, Dissolved Gases, T/D Mn, As, Fe, Cr, Nitrate, Sulfate, TOC, Alkalinity
204-RS2794	204-RS2794 -GW- AAR3141 -REG	NA			TCL VOC, Perchlorate, Explosives+, Dissolved Gases, T/D Mn, As, Fe, Cr, Nitrate, Sulfate, TOC, Alkalinity
204-RS2824	204-RS2824 -GW- AAR3142 -REG	NA			TCL VOC, Perchlorate, Explosives+, Dissolved Gases, T/D Mn, As, Fe, Cr, Nitrate, Sulfate, TOC, Alkalinity

Table 3-1

Sampling Locations and Methods
RSA-204
Redstone Arsenal, Madison County, Alabama

Sample Location	Sample Designation	Sample Depth (ft bgs)	QA/QC Sample Designation		Analytical Suite
			FD*	MS/MSD*	
IDW Water Samples					
204-SITE	204-SITE -WA- AAR9070 -REG	NA			TCL VOCs, Explosives+, Perchlorate
204-SITE	204-SITE -WA- AAR9071 -REG	NA			TCL VOCs, Explosives+, Perchlorate
204-SITE	204-SITE -WA- AAR9072 -REG	NA			TCL VOCs, Explosives+, Perchlorate
204-SITE	204-SITE -WA- AAR9073 -REG	NA			TCL VOCs, Explosives+, Perchlorate
RSA-204 Well Sample Locations Year 1 Round 3					
K-RS690	K-RS690 -GW- AAR3143 -REG	NA			TCL VOC, Perchlorate, Explosives+, Dissolved Gases, T/D Mn, As, Fe, Cr, Nitrate, Sulfate, TOC, Alkalinity
K-RS691	K-RS691 -GW- AAR3144 -REG	NA			TCL VOC, Perchlorate, Explosives+, Dissolved Gases, T/D Mn, As, Fe, Cr, Nitrate, Sulfate, TOC, Alkalinity
K142-RS1223	K142-RS1223 -GW- AAR3145 -REG	NA		K142-RS1223-GW-AAR3145-MS/MSD	TCL VOC, Perchlorate, Explosives+, Dissolved Gases, T/D Mn, As, Fe, Cr, Nitrate, Sulfate, TOC, Alkalinity
K204-RS1550	K204-RS1550 -GW- AAR3146 -REG	NA	K204-RS1550-GW-AAR3147-FD		TCL VOC, Perchlorate, Explosives+, Dissolved Gases, T/D Mn, As, Fe, Cr, Nitrate, Sulfate, TOC, Alkalinity
204-RS2027	204-RS2027 -GW- AAR3148 -REG	NA			TCL VOC, Perchlorate, Explosives+, Dissolved Gases, T/D Mn, As, Fe, Cr, Nitrate, Sulfate, TOC, Alkalinity
204-RS2029	204-RS2029 -GW- AAR3149 -REG	NA			TCL VOC, Perchlorate, Explosives+, Dissolved Gases, T/D Mn, As, Fe, Cr, Nitrate, Sulfate, TOC, Alkalinity
204-RS2030	204-RS2030 -GW- AAR3150 -REG	NA			TCL VOC, Perchlorate, Explosives+, Dissolved Gases, T/D Mn, As, Fe, Cr, Nitrate, Sulfate, TOC, Alkalinity
204-RS2031	204-RS2031 -GW- AAR3151 -REG	NA			TCL VOC, Perchlorate, Explosives+, Dissolved Gases, T/D Mn, As, Fe, Cr, Nitrate, Sulfate, TOC, Alkalinity
204-RS2032	204-RS2032 -GW- AAR3152 -REG	NA			TCL VOC, Perchlorate, Explosives+, Dissolved Gases, T/D Mn, As, Fe, Cr, Nitrate, Sulfate, TOC, Alkalinity
204-RS2033	204-RS2033 -GW- AAR3153 -REG	NA		204-RS2033-GW-AAR3153-MS/MSD	TCL VOC, Perchlorate, Explosives+, Dissolved Gases, T/D Mn, As, Fe, Cr, Nitrate, Sulfate, TOC, Alkalinity
204-RS2034	204-RS2034 -GW- AAR3154 -REG	NA	204-RS2034-GW-AAR3155-FD		TCL VOC, Perchlorate, Explosives+, Dissolved Gases, T/D Mn, As, Fe, Cr, Nitrate, Sulfate, TOC, Alkalinity
204-RS2668	204-RS2668 -GW- AAR3156 -REG	NA			TCL VOC, Perchlorate, Explosives+, Dissolved Gases, T/D Mn, As, Fe, Cr, Nitrate, Sulfate, TOC, Alkalinity

Table 3-1

Sampling Locations and Methods
RSA-204
Redstone Arsenal, Madison County, Alabama

Sample Location	Sample Designation	Sample Depth (ft bgs)	QA/QC Sample Designation		Analytical Suite
			FD*	MS/MSD*	
204-RS2670	204-RS2670 -GW- AAR3157 -REG	NA			TCL VOC, Perchlorate, Explosives+, Dissolved Gases, T/D Mn, As, Fe, Cr, Nitrate, Sulfate, TOC, Alkalinity
204-RS2672	204-RS2672 -GW- AAR3158 -REG	NA			TCL VOC, Perchlorate, Explosives+, Dissolved Gases, T/D Mn, As, Fe, Cr, Nitrate, Sulfate, TOC, Alkalinity
204-RS2673	204-RS2673 -GW- AAR3159 -REG	NA			TCL VOC, Perchlorate, Explosives+, Dissolved Gases, T/D Mn, As, Fe, Cr, Nitrate, Sulfate, TOC, Alkalinity
204-RS2674	204-RS2674 -GW- AAR3160 -REG	NA			TCL VOC, Perchlorate, Explosives+, Dissolved Gases, T/D Mn, As, Fe, Cr, Nitrate, Sulfate, TOC, Alkalinity
204-RS2675	204-RS2675 -GW- AAR3161 -REG	NA			TCL VOC, Perchlorate, Explosives+, Dissolved Gases, T/D Mn, As, Fe, Cr, Nitrate, Sulfate, TOC, Alkalinity
204-RS2676	204-RS2676 -GW- AAR3162 -REG	NA	204-RS2676-GW-AAR3163-FD		TCL VOC, Perchlorate, Explosives+, Dissolved Gases, T/D Mn, As, Fe, Cr, Nitrate, Sulfate, TOC, Alkalinity
204-RS2677	204-RS2677 -GW- AAR3164 -REG	NA			TCL VOC, Perchlorate, Explosives+, Dissolved Gases, T/D Mn, As, Fe, Cr, Nitrate, Sulfate, TOC, Alkalinity
204-RS2678	204-RS2678 -GW- AAR3165 -REG	NA			TCL VOC, Perchlorate, Explosives+, Dissolved Gases, T/D Mn, As, Fe, Cr, Nitrate, Sulfate, TOC, Alkalinity
204-RS2683	204-RS2683 -GW- AAR3166 -REG	NA			TCL VOC, Perchlorate, Explosives+, Dissolved Gases, T/D Mn, As, Fe, Cr, Nitrate, Sulfate, TOC, Alkalinity
204-RS2791	204-RS2791 -GW- AAR3167 -REG	NA			TCL VOC, Perchlorate, Explosives+, Dissolved Gases, T/D Mn, As, Fe, Cr, Nitrate, Sulfate, TOC, Alkalinity
204-RS2792	204-RS2792 -GW- AAR3168 -REG	NA			TCL VOC, Perchlorate, Explosives+, Dissolved Gases, T/D Mn, As, Fe, Cr, Nitrate, Sulfate, TOC, Alkalinity
204-RS2793	204-RS2793 -GW- AAR3169 -REG	NA			TCL VOC, Perchlorate, Explosives+, Dissolved Gases, T/D Mn, As, Fe, Cr, Nitrate, Sulfate, TOC, Alkalinity
204-RS2794	204-RS2794 -GW- AAR3170 -REG	NA			TCL VOC, Perchlorate, Explosives+, Dissolved Gases, T/D Mn, As, Fe, Cr, Nitrate, Sulfate, TOC, Alkalinity
204-RS2824	204-RS2824 -GW- AAR3171 -REG	NA			TCL VOC, Perchlorate, Explosives+, Dissolved Gases, T/D Mn, As, Fe, Cr, Nitrate, Sulfate, TOC, Alkalinity

Table 3-1

Sampling Locations and Methods
RSA-204
Redstone Arsenal, Madison County, Alabama

Sample Location	Sample Designation	Sample Depth (ft bgs)	QA/QC Sample Designation		Analytical Suite
			FD*	MS/MSD*	
IDW Water Samples					
204-SITE	204-SITE -WA- AAR9074 -REG	NA			TCL VOCs, Explosives+, Perchlorate
204-SITE	204-SITE -WA- AAR9075 -REG	NA			TCL VOCs, Explosives+, Perchlorate
204-SITE	204-SITE -WA- AAR9076 -REG	NA			TCL VOCs, Explosives+, Perchlorate
204-SITE	204-SITE -WA- AAR9077 -REG	NA			TCL VOCs, Explosives+, Perchlorate
RSA-204 Well Sample Locations Year 1 Round 4					
K-RS690	K-RS690 -GW- AAR3172 -REG	NA			TCL VOC, Perchlorate, Explosives+, Dissolved Gases, T/D Mn, As, Fe, Cr, Nitrate, Sulfate, TOC, Alkalinity
K-RS691	K-RS691 -GW- AAR3173 -REG	NA			TCL VOC, Perchlorate, Explosives+, Dissolved Gases, T/D Mn, As, Fe, Cr, Nitrate, Sulfate, TOC, Alkalinity
K142-RS1223	K142-RS1223 -GW- AAR3174 -REG	NA		K142-RS1223-GW-AAR3174-MS/MSD	TCL VOC, Perchlorate, Explosives+, Dissolved Gases, T/D Mn, As, Fe, Cr, Nitrate, Sulfate, TOC, Alkalinity
K204-RS1550	K204-RS1550 -GW- AAR3175 -REG	NA			TCL VOC, Perchlorate, Explosives+, Dissolved Gases, T/D Mn, As, Fe, Cr, Nitrate, Sulfate, TOC, Alkalinity
204-RS2027	204-RS2027 -GW- AAR3176 -REG	NA			TCL VOC, Perchlorate, Explosives+, Dissolved Gases, T/D Mn, As, Fe, Cr, Nitrate, Sulfate, TOC, Alkalinity
204-RS2029	204-RS2029 -GW- AAR3177 -REG	NA			TCL VOC, Perchlorate, Explosives+, Dissolved Gases, T/D Mn, As, Fe, Cr, Nitrate, Sulfate, TOC, Alkalinity
204-RS2030	204-RS2030 -GW- AAR3178 -REG	NA			TCL VOC, Perchlorate, Explosives+, Dissolved Gases, T/D Mn, As, Fe, Cr, Nitrate, Sulfate, TOC, Alkalinity
204-RS2031	204-RS2031 -GW- AAR3179 -REG	NA	204-RS2031-GW-AAR3180-FD		TCL VOC, Perchlorate, Explosives+, Dissolved Gases, T/D Mn, As, Fe, Cr, Nitrate, Sulfate, TOC, Alkalinity
204-RS2032	204-RS2032 -GW- AAR3181 -REG	NA			TCL VOC, Perchlorate, Explosives+, Dissolved Gases, T/D Mn, As, Fe, Cr, Nitrate, Sulfate, TOC, Alkalinity
204-RS2033	204-RS2033 -GW- AAR3182 -REG	NA			TCL VOC, Perchlorate, Explosives+, Dissolved Gases, T/D Mn, As, Fe, Cr, Nitrate, Sulfate, TOC, Alkalinity
204-RS2034	204-RS2034 -GW- AAR3183 -REG	NA			TCL VOC, Perchlorate, Explosives+, Dissolved Gases, T/D Mn, As, Fe, Cr, Nitrate, Sulfate, TOC, Alkalinity
204-RS2668	204-RS2668 -GW- AAR3184 -REG	NA	204-RS2668-GW-AAR3185-FD		TCL VOC, Perchlorate, Explosives+, Dissolved Gases, T/D Mn, As, Fe, Cr, Nitrate, Sulfate, TOC, Alkalinity

Table 3-1

Sampling Locations and Methods
RSA-204
Redstone Arsenal, Madison County, Alabama

Sample Location	Sample Designation	Sample Depth (ft bgs)	QA/QC Sample Designation		Analytical Suite
			FD*	MS/MSD*	
204-RS2670	204-RS2670 -GW- AAR3186 -REG	NA			TCL VOC, Perchlorate, Explosives+, Dissolved Gases, T/D Mn, As, Fe, Cr, Nitrate, Sulfate, TOC, Alkalinity
204-RS2672	204-RS2672 -GW- AAR3187 -REG	NA			TCL VOC, Perchlorate, Explosives+, Dissolved Gases, T/D Mn, As, Fe, Cr, Nitrate, Sulfate, TOC, Alkalinity
204-RS2673	204-RS2673 -GW- AAR3188 -REG	NA			TCL VOC, Perchlorate, Explosives+, Dissolved Gases, T/D Mn, As, Fe, Cr, Nitrate, Sulfate, TOC, Alkalinity
204-RS2674	204-RS2674 -GW- AAR3189 -REG	NA			TCL VOC, Perchlorate, Explosives+, Dissolved Gases, T/D Mn, As, Fe, Cr, Nitrate, Sulfate, TOC, Alkalinity
204-RS2675	204-RS2675 -GW- AAR3190 -REG	NA			TCL VOC, Perchlorate, Explosives+, Dissolved Gases, T/D Mn, As, Fe, Cr, Nitrate, Sulfate, TOC, Alkalinity
204-RS2676	204-RS2676 -GW- AAR3191 -REG	NA	204-RS2676-GW-AAR3192-FD		TCL VOC, Perchlorate, Explosives+, Dissolved Gases, T/D Mn, As, Fe, Cr, Nitrate, Sulfate, TOC, Alkalinity
204-RS2677	204-RS2677 -GW- AAR3193 -REG	NA			TCL VOC, Perchlorate, Explosives+, Dissolved Gases, T/D Mn, As, Fe, Cr, Nitrate, Sulfate, TOC, Alkalinity
204-RS2678	204-RS2678 -GW- AAR3194 -REG	NA			TCL VOC, Perchlorate, Explosives+, Dissolved Gases, T/D Mn, As, Fe, Cr, Nitrate, Sulfate, TOC, Alkalinity
204-RS2683	204-RS2683 -GW- AAR3195 -REG	NA		204-RS2683-GW-AAR3195-MS/MSD	TCL VOC, Perchlorate, Explosives+, Dissolved Gases, T/D Mn, As, Fe, Cr, Nitrate, Sulfate, TOC, Alkalinity
204-RS2791	204-RS2791 -GW- AAR3196 -REG	NA			TCL VOC, Perchlorate, Explosives+, Dissolved Gases, T/D Mn, As, Fe, Cr, Nitrate, Sulfate, TOC, Alkalinity
204-RS2792	204-RS2792 -GW- AAR3197 -REG	NA			TCL VOC, Perchlorate, Explosives+, Dissolved Gases, T/D Mn, As, Fe, Cr, Nitrate, Sulfate, TOC, Alkalinity
204-RS2793	204-RS2793 -GW- AAR3198 -REG	NA			TCL VOC, Perchlorate, Explosives+, Dissolved Gases, T/D Mn, As, Fe, Cr, Nitrate, Sulfate, TOC, Alkalinity
204-RS2794	204-RS2794 -GW- AAR3199 -REG	NA			TCL VOC, Perchlorate, Explosives+, Dissolved Gases, T/D Mn, As, Fe, Cr, Nitrate, Sulfate, TOC, Alkalinity
204-RS2824	204-RS2824 -GW- AAR3200 -REG	NA			TCL VOC, Perchlorate, Explosives+, Dissolved Gases, T/D Mn, As, Fe, Cr, Nitrate, Sulfate, TOC, Alkalinity

Table 3-1

Sampling Locations and Methods
RSA-204
Redstone Arsenal, Madison County, Alabama

Sample Location	Sample Designation	Sample Depth (ft bgs)	QA/QC Sample Designation		Analytical Suite
			FD*	MS/MSD*	
IDW Water Samples					
204-SITE	204-SITE -WA- AAR9078 -REG	NA			TCL VOCs, Explosives+, Perchlorate
204-SITE	204-SITE -WA- AAR9079 -REG	NA			TCL VOCs, Explosives+, Perchlorate
204-SITE	204-SITE -WA- AAR9080 -REG	NA			TCL VOCs, Explosives+, Perchlorate
204-SITE	204-SITE -WA- AAR9081 -REG	NA			TCL VOCs, Explosives+, Perchlorate
RSA-204 Well Sample Locations Year 2 Round 1					
K-RS690	K-RS690 -GW- AAR3201 -REG	NA	K-RS690-GW-AAR3202-FD		TCL VOC, Perchlorate, Explosives+, Dissolved Gases, T/D Mn, As, Fe, Cr, Nitrate, Sulfate, TOC, Alkalinity
K-RS691	K-RS691 -GW- AAR3203 -REG	NA			TCL VOC, Perchlorate, Explosives+, Dissolved Gases, T/D Mn, As, Fe, Cr, Nitrate, Sulfate, TOC, Alkalinity
K142-RS1223	K142-RS1223 -GW- AAR3204 -REG	NA		K142-RS1223-GW-AAR3204-MS/MSD	TCL VOC, Perchlorate, Explosives+, Dissolved Gases, T/D Mn, As, Fe, Cr, Nitrate, Sulfate, TOC, Alkalinity
K204-RS1550	K204-RS1550 -GW- AAR3205 -REG	NA			TCL VOC, Perchlorate, Explosives+, Dissolved Gases, T/D Mn, As, Fe, Cr, Nitrate, Sulfate, TOC, Alkalinity
204-RS2027	204-RS2027 -GW- AAR3206 -REG	NA		204-RS2027-GW-AAR3211-MS/MSD	TCL VOC, Perchlorate, Explosives+, Dissolved Gases, T/D Mn, As, Fe, Cr, Nitrate, Sulfate, TOC, Alkalinity
204-RS2029	204-RS2029 -GW- AAR3207 -REG	NA	204-RS2029-GW-AAR3208-FD		TCL VOC, Perchlorate, Explosives+, Dissolved Gases, T/D Mn, As, Fe, Cr, Nitrate, Sulfate, TOC, Alkalinity
204-RS2030	204-RS2030 -GW- AAR3209 -REG	NA			TCL VOC, Perchlorate, Explosives+, Dissolved Gases, T/D Mn, As, Fe, Cr, Nitrate, Sulfate, TOC, Alkalinity
204-RS2031	204-RS2031 -GW- AAR3210 -REG	NA			TCL VOC, Perchlorate, Explosives+, Dissolved Gases, T/D Mn, As, Fe, Cr, Nitrate, Sulfate, TOC, Alkalinity
204-RS2032	204-RS2032 -GW- AAR3211 -REG	NA			TCL VOC, Perchlorate, Explosives+, Dissolved Gases, T/D Mn, As, Fe, Cr, Nitrate, Sulfate, TOC, Alkalinity
204-RS2033	204-RS2033 -GW- AAR3212 -REG	NA			TCL VOC, Perchlorate, Explosives+, Dissolved Gases, T/D Mn, As, Fe, Cr, Nitrate, Sulfate, TOC, Alkalinity
204-RS2034	204-RS2034 -GW- AAR3213 -REG	NA			TCL VOC, Perchlorate, Explosives+, Dissolved Gases, T/D Mn, As, Fe, Cr, Nitrate, Sulfate, TOC, Alkalinity
204-RS2668	204-RS2668 -GW- AAR3214 -REG	NA			TCL VOC, Perchlorate, Explosives+, Dissolved Gases, T/D Mn, As, Fe, Cr, Nitrate, Sulfate, TOC, Alkalinity

Table 3-1

Sampling Locations and Methods
RSA-204
Redstone Arsenal, Madison County, Alabama

Sample Location	Sample Designation	Sample Depth (ft bgs)	QA/QC Sample Designation		Analytical Suite
			FD*	MS/MSD*	
204-RS2670	204-RS2670 -GW- AAR3215 -REG	NA			TCL VOC, Perchlorate, Explosives+, Dissolved Gases, T/D Mn, As, Fe, Cr, Nitrate, Sulfate, TOC, Alkalinity
204-RS2672	204-RS2672 -GW- AAR3216 -REG	NA			TCL VOC, Perchlorate, Explosives+, Dissolved Gases, T/D Mn, As, Fe, Cr, Nitrate, Sulfate, TOC, Alkalinity
204-RS2673	204-RS2673 -GW- AAR3217 -REG	NA			TCL VOC, Perchlorate, Explosives+, Dissolved Gases, T/D Mn, As, Fe, Cr, Nitrate, Sulfate, TOC, Alkalinity
204-RS2674	204-RS2674 -GW- AAR3218 -REG	NA			TCL VOC, Perchlorate, Explosives+, Dissolved Gases, T/D Mn, As, Fe, Cr, Nitrate, Sulfate, TOC, Alkalinity
204-RS2675	204-RS2675 -GW- AAR3219 -REG	NA			TCL VOC, Perchlorate, Explosives+, Dissolved Gases, T/D Mn, As, Fe, Cr, Nitrate, Sulfate, TOC, Alkalinity
204-RS2676	204-RS2676 -GW- AAR3220 -REG	NA			TCL VOC, Perchlorate, Explosives+, Dissolved Gases, T/D Mn, As, Fe, Cr, Nitrate, Sulfate, TOC, Alkalinity
204-RS2677	204-RS2677 -GW- AAR3221 -REG	NA			TCL VOC, Perchlorate, Explosives+, Dissolved Gases, T/D Mn, As, Fe, Cr, Nitrate, Sulfate, TOC, Alkalinity
204-RS2678	204-RS2678 -GW- AAR3222 -REG	NA			TCL VOC, Perchlorate, Explosives+, Dissolved Gases, T/D Mn, As, Fe, Cr, Nitrate, Sulfate, TOC, Alkalinity
204-RS2683	204-RS2683 -GW- AAR3223 -REG	NA			TCL VOC, Perchlorate, Explosives+, Dissolved Gases, T/D Mn, As, Fe, Cr, Nitrate, Sulfate, TOC, Alkalinity
204-RS2791	204-RS2791 -GW- AAR3224 -REG	NA			TCL VOC, Perchlorate, Explosives+, Dissolved Gases, T/D Mn, As, Fe, Cr, Nitrate, Sulfate, TOC, Alkalinity
204-RS2792	204-RS2792 -GW- AAR3225 -REG	NA			TCL VOC, Perchlorate, Explosives+, Dissolved Gases, T/D Mn, As, Fe, Cr, Nitrate, Sulfate, TOC, Alkalinity
204-RS2793	204-RS2793 -GW- AAR3226 -REG	NA			TCL VOC, Perchlorate, Explosives+, Dissolved Gases, T/D Mn, As, Fe, Cr, Nitrate, Sulfate, TOC, Alkalinity
204-RS2794	204-RS2794 -GW- AAR3227 -REG	NA			TCL VOC, Perchlorate, Explosives+, Dissolved Gases, T/D Mn, As, Fe, Cr, Nitrate, Sulfate, TOC, Alkalinity
204-RS2824	204-RS2824 -GW- AAR3228 -REG	NA	204-RS2824-GW-AAR3229-FD		TCL VOC, Perchlorate, Explosives+, Dissolved Gases, T/D Mn, As, Fe, Cr, Nitrate, Sulfate, TOC, Alkalinity

Table 3-1

Sampling Locations and Methods
RSA-204
Redstone Arsenal, Madison County, Alabama

Sample Location	Sample Designation	Sample Depth (ft bgs)	QA/QC Sample Designation		Analytical Suite
			FD*	MS/MSD*	
IDW Water Samples					
204-SITE	204-SITE -WA- AAR9082 -REG	NA			TCL VOCs, Explosives+, Perchlorate
204-SITE	204-SITE -WA- AAR9083 -REG	NA			TCL VOCs, Explosives+, Perchlorate
204-SITE	204-SITE -WA- AAR9084 -REG	NA			TCL VOCs, Explosives+, Perchlorate
204-SITE	204-SITE -WA- AAR9085 -REG	NA			TCL VOCs, Explosives+, Perchlorate
RSA-204 Well Sample Locations Year 2 Round 2					
K-RS690	K-RS690 -GW- AAR3230 -REG	NA			TCL VOC, Perchlorate, Explosives+, Dissolved Gases, T/D Mn, As, Fe, Cr, Nitrate, Sulfate, TOC, Alkalinity
K-RS691	K-RS691 -GW- AAR3231 -REG	NA			TCL VOC, Perchlorate, Explosives+, Dissolved Gases, T/D Mn, As, Fe, Cr, Nitrate, Sulfate, TOC, Alkalinity
K142-RS1223	K142-RS1223 -GW- AAR3232 -REG	NA		K142-RS1223-GW-AAR3232-MS/MSD	TCL VOC, Perchlorate, Explosives+, Dissolved Gases, T/D Mn, As, Fe, Cr, Nitrate, Sulfate, TOC, Alkalinity
K204-RS1550	K204-RS1550 -GW- AAR3233 -REG	NA			TCL VOC, Perchlorate, Explosives+, Dissolved Gases, T/D Mn, As, Fe, Cr, Nitrate, Sulfate, TOC, Alkalinity
204-RS2027	204-RS2027 -GW- AAR3234 -REG	NA			TCL VOC, Perchlorate, Explosives+, Dissolved Gases, T/D Mn, As, Fe, Cr, Nitrate, Sulfate, TOC, Alkalinity
204-RS2029	204-RS2029 -GW- AAR3235 -REG	NA			TCL VOC, Perchlorate, Explosives+, Dissolved Gases, T/D Mn, As, Fe, Cr, Nitrate, Sulfate, TOC, Alkalinity
204-RS2030	204-RS2030 -GW- AAR3236 -REG	NA			TCL VOC, Perchlorate, Explosives+, Dissolved Gases, T/D Mn, As, Fe, Cr, Nitrate, Sulfate, TOC, Alkalinity
204-RS2031	204-RS2031 -GW- AAR3237 -REG	NA			TCL VOC, Perchlorate, Explosives+, Dissolved Gases, T/D Mn, As, Fe, Cr, Nitrate, Sulfate, TOC, Alkalinity
204-RS2032	204-RS2032 -GW- AAR3238 -REG	NA	K-RS2032-GW-AAR3239-FD		TCL VOC, Perchlorate, Explosives+, Dissolved Gases, T/D Mn, As, Fe, Cr, Nitrate, Sulfate, TOC, Alkalinity
204-RS2033	204-RS2033 -GW- AAR3240 -REG	NA			TCL VOC, Perchlorate, Explosives+, Dissolved Gases, T/D Mn, As, Fe, Cr, Nitrate, Sulfate, TOC, Alkalinity
204-RS2034	204-RS2034 -GW- AAR3241 -REG	NA			TCL VOC, Perchlorate, Explosives+, Dissolved Gases, T/D Mn, As, Fe, Cr, Nitrate, Sulfate, TOC, Alkalinity
204-RS2668	204-RS2668 -GW- AAR3242 -REG	NA			TCL VOC, Perchlorate, Explosives+, Dissolved Gases, T/D Mn, As, Fe, Cr, Nitrate, Sulfate, TOC, Alkalinity

Table 3-1

Sampling Locations and Methods
RSA-204
Redstone Arsenal, Madison County, Alabama

Sample Location	Sample Designation	Sample Depth (ft bgs)	QA/QC Sample Designation		Analytical Suite
			FD*	MS/MSD*	
204-RS2670	204-RS2670 -GW- AAR3243 -REG	NA			TCL VOC, Perchlorate, Explosives+, Dissolved Gases, T/D Mn, As, Fe, Cr, Nitrate, Sulfate, TOC, Alkalinity
204-RS2672	204-RS2672 -GW- AAR3244 -REG	NA			TCL VOC, Perchlorate, Explosives+, Dissolved Gases, T/D Mn, As, Fe, Cr, Nitrate, Sulfate, TOC, Alkalinity
204-RS2673	204-RS2673 -GW- AAR3245 -REG	NA			TCL VOC, Perchlorate, Explosives+, Dissolved Gases, T/D Mn, As, Fe, Cr, Nitrate, Sulfate, TOC, Alkalinity
204-RS2674	204-RS2674 -GW- AAR3246 -REG	NA	204-RS2674-GW-AAR3247-FD		TCL VOC, Perchlorate, Explosives+, Dissolved Gases, T/D Mn, As, Fe, Cr, Nitrate, Sulfate, TOC, Alkalinity
204-RS2675	204-RS2675 -GW- AAR3248 -REG	NA			TCL VOC, Perchlorate, Explosives+, Dissolved Gases, T/D Mn, As, Fe, Cr, Nitrate, Sulfate, TOC, Alkalinity
204-RS2676	204-RS2676 -GW- AAR3249 -REG	NA			TCL VOC, Perchlorate, Explosives+, Dissolved Gases, T/D Mn, As, Fe, Cr, Nitrate, Sulfate, TOC, Alkalinity
204-RS2677	204-RS2677 -GW- AAR3250 -REG	NA		204-RS2677-GW-AAR3250-MS/MSD	TCL VOC, Perchlorate, Explosives+, Dissolved Gases, T/D Mn, As, Fe, Cr, Nitrate, Sulfate, TOC, Alkalinity
204-RS2678	204-RS2678 -GW- AAR3251 -REG	NA			TCL VOC, Perchlorate, Explosives+, Dissolved Gases, T/D Mn, As, Fe, Cr, Nitrate, Sulfate, TOC, Alkalinity
204-RS2683	204-RS2683 -GW- AAR3252 -REG	NA			TCL VOC, Perchlorate, Explosives+, Dissolved Gases, T/D Mn, As, Fe, Cr, Nitrate, Sulfate, TOC, Alkalinity
204-RS2791	204-RS2791 -GW- AAR3253 -REG	NA			TCL VOC, Perchlorate, Explosives+, Dissolved Gases, T/D Mn, As, Fe, Cr, Nitrate, Sulfate, TOC, Alkalinity
204-RS2792	204-RS2792 -GW- AAR3254 -REG	NA			TCL VOC, Perchlorate, Explosives+, Dissolved Gases, T/D Mn, As, Fe, Cr, Nitrate, Sulfate, TOC, Alkalinity
204-RS2793	204-RS2793 -GW- AAR3255 -REG	NA	204-RS2793-GW-AAR3256-FD		TCL VOC, Perchlorate, Explosives+, Dissolved Gases, T/D Mn, As, Fe, Cr, Nitrate, Sulfate, TOC, Alkalinity
204-RS2794	204-RS2794 -GW- AAR3257 -REG	NA			TCL VOC, Perchlorate, Explosives+, Dissolved Gases, T/D Mn, As, Fe, Cr, Nitrate, Sulfate, TOC, Alkalinity
204-RS2824	204-RS2824 -GW- AAR3258 -REG	NA			TCL VOC, Perchlorate, Explosives+, Dissolved Gases, T/D Mn, As, Fe, Cr, Nitrate, Sulfate, TOC, Alkalinity

Table 3-1

Sampling Locations and Methods
RSA-204
Redstone Arsenal, Madison County, Alabama

Sample Location	Sample Designation	Sample Depth (ft bgs)	QA/QC Sample Designation		Analytical Suite
			FD*	MS/MSD*	
IDW Water Samples					
204-SITE	204-SITE -WA- AAR9086 -REG	NA			TCL VOCs, Explosives+, Perchlorate
204-SITE	204-SITE -WA- AAR9087 -REG	NA			TCL VOCs, Explosives+, Perchlorate
204-SITE	204-SITE -WA- AAR9088 -REG	NA			TCL VOCs, Explosives+, Perchlorate
204-SITE	204-SITE -WA- AAR9089 -REG	NA			TCL VOCs, Explosives+, Perchlorate
RSA-204 Well Sample Locations Year 3 Round 1					
K-RS690	K-RS690 -GW- AAR3259 -REG	NA			TCL VOC, Perchlorate, Explosives+, Dissolved Gases, T/D Mn, As, Fe, Cr, Nitrate, Sulfate, TOC, Alkalinity
K-RS691	K-RS691 -GW- AAR3260 -REG	NA			TCL VOC, Perchlorate, Explosives+, Dissolved Gases, T/D Mn, As, Fe, Cr, Nitrate, Sulfate, TOC, Alkalinity
K142-RS1223	K142-RS1223 -GW- AAR3261 -REG	NA	K142-RS1223-GW-AAR3262-FD		TCL VOC, Perchlorate, Explosives+, Dissolved Gases, T/D Mn, As, Fe, Cr, Nitrate, Sulfate, TOC, Alkalinity
K204-RS1550	K204-RS1550 -GW- AAR3263 -REG	NA			TCL VOC, Perchlorate, Explosives+, Dissolved Gases, T/D Mn, As, Fe, Cr, Nitrate, Sulfate, TOC, Alkalinity
204-RS2027	204-RS2027 -GW- AAR3264 -REG	NA		204-RS2027-GW-AAR3264-MS/MSD	TCL VOC, Perchlorate, Explosives+, Dissolved Gases, T/D Mn, As, Fe, Cr, Nitrate, Sulfate, TOC, Alkalinity
204-RS2029	204-RS2029 -GW- AAR3265 -REG	NA			TCL VOC, Perchlorate, Explosives+, Dissolved Gases, T/D Mn, As, Fe, Cr, Nitrate, Sulfate, TOC, Alkalinity
204-RS2030	204-RS2030 -GW- AAR3266 -REG	NA			TCL VOC, Perchlorate, Explosives+, Dissolved Gases, T/D Mn, As, Fe, Cr, Nitrate, Sulfate, TOC, Alkalinity
204-RS2031	204-RS2031 -GW- AAR3267 -REG	NA			TCL VOC, Perchlorate, Explosives+, Dissolved Gases, T/D Mn, As, Fe, Cr, Nitrate, Sulfate, TOC, Alkalinity
204-RS2032	204-RS2032 -GW- AAR3268 -REG	NA			TCL VOC, Perchlorate, Explosives+, Dissolved Gases, T/D Mn, As, Fe, Cr, Nitrate, Sulfate, TOC, Alkalinity
204-RS2033	204-RS2033 -GW- AAR3269 -REG	NA	K-RS2033-GW-AAR3270-FD		TCL VOC, Perchlorate, Explosives+, Dissolved Gases, T/D Mn, As, Fe, Cr, Nitrate, Sulfate, TOC, Alkalinity
204-RS2034	204-RS2034 -GW- AAR3271 -REG	NA			TCL VOC, Perchlorate, Explosives+, Dissolved Gases, T/D Mn, As, Fe, Cr, Nitrate, Sulfate, TOC, Alkalinity
204-RS2668	204-RS2668 -GW- AAR3272 -REG	NA		204-RS2688-GW-AAR3272-MS/MSD	TCL VOC, Perchlorate, Explosives+, Dissolved Gases, T/D Mn, As, Fe, Cr, Nitrate, Sulfate, TOC, Alkalinity

Table 3-1

Sampling Locations and Methods
RSA-204
Redstone Arsenal, Madison County, Alabama

Sample Location	Sample Designation	Sample Depth (ft bgs)	QA/QC Sample Designation		Analytical Suite
			FD*	MS/MSD*	
204-RS2670	204-RS2670 -GW- AAR3273 -REG	NA			TCL VOC, Perchlorate, Explosives+, Dissolved Gases, T/D Mn, As, Fe, Cr, Nitrate, Sulfate, TOC, Alkalinity
204-RS2672	204-RS2672 -GW- AAR3274 -REG	NA			TCL VOC, Perchlorate, Explosives+, Dissolved Gases, T/D Mn, As, Fe, Cr, Nitrate, Sulfate, TOC, Alkalinity
204-RS2673	204-RS2673 -GW- AAR3275 -REG	NA			TCL VOC, Perchlorate, Explosives+, Dissolved Gases, T/D Mn, As, Fe, Cr, Nitrate, Sulfate, TOC, Alkalinity
204-RS2674	204-RS2674 -GW- AAR3276 -REG	NA			TCL VOC, Perchlorate, Explosives+, Dissolved Gases, T/D Mn, As, Fe, Cr, Nitrate, Sulfate, TOC, Alkalinity
204-RS2675	204-RS2675 -GW- AAR3277 -REG	NA			TCL VOC, Perchlorate, Explosives+, Dissolved Gases, T/D Mn, As, Fe, Cr, Nitrate, Sulfate, TOC, Alkalinity
204-RS2676	204-RS2676 -GW- AAR3278 -REG	NA			TCL VOC, Perchlorate, Explosives+, Dissolved Gases, T/D Mn, As, Fe, Cr, Nitrate, Sulfate, TOC, Alkalinity
204-RS2677	204-RS2677 -GW- AAR3279 -REG	NA			TCL VOC, Perchlorate, Explosives+, Dissolved Gases, T/D Mn, As, Fe, Cr, Nitrate, Sulfate, TOC, Alkalinity
204-RS2678	204-RS2678 -GW- AAR3280 -REG	NA			TCL VOC, Perchlorate, Explosives+, Dissolved Gases, T/D Mn, As, Fe, Cr, Nitrate, Sulfate, TOC, Alkalinity
204-RS2683	204-RS2683 -GW- AAR3281 -REG	NA			TCL VOC, Perchlorate, Explosives+, Dissolved Gases, T/D Mn, As, Fe, Cr, Nitrate, Sulfate, TOC, Alkalinity
204-RS2791	204-RS2791 -GW- AAR3282 -REG	NA	204-RS2791-GW-AAR3283-FD		TCL VOC, Perchlorate, Explosives+, Dissolved Gases, T/D Mn, As, Fe, Cr, Nitrate, Sulfate, TOC, Alkalinity
204-RS2792	204-RS2792 -GW- AAR3284 -REG	NA			TCL VOC, Perchlorate, Explosives+, Dissolved Gases, T/D Mn, As, Fe, Cr, Nitrate, Sulfate, TOC, Alkalinity
204-RS2793	204-RS2793 -GW- AAR3285 -REG	NA			TCL VOC, Perchlorate, Explosives+, Dissolved Gases, T/D Mn, As, Fe, Cr, Nitrate, Sulfate, TOC, Alkalinity
204-RS2794	204-RS2794 -GW- AAR3286 -REG	NA			TCL VOC, Perchlorate, Explosives+, Dissolved Gases, T/D Mn, As, Fe, Cr, Nitrate, Sulfate, TOC, Alkalinity
204-RS2824	204-RS2824 -GW- AAR3287 -REG	NA			TCL VOC, Perchlorate, Explosives+, Dissolved Gases, T/D Mn, As, Fe, Cr, Nitrate, Sulfate, TOC, Alkalinity

Table 3-1

Sampling Locations and Methods
RSA-204
Redstone Arsenal, Madison County, Alabama

Sample Location	Sample Designation	Sample Depth (ft bgs)	QA/QC Sample Designation		Analytical Suite
			FD*	MS/MSD*	
IDW Water Samples					
204-SITE	204-SITE -WA- AAR9090 -REG	NA			TCL VOCs, Explosives+, Perchlorate
204-SITE	204-SITE -WA- AAR9091 -REG	NA			TCL VOCs, Explosives+, Perchlorate
204-SITE	204-SITE -WA- AAR9092 -REG	NA			TCL VOCs, Explosives+, Perchlorate
204-SITE	204-SITE -WA- AAR9093 -REG	NA			TCL VOCs, Explosives+, Perchlorate
RSA-204 Well Sample Locations Year 3 Round 2					
K-RS690	K-RS690 -GW- AAR3288 -REG	NA			TCL VOC, Perchlorate, Explosives+, Dissolved Gases, T/D Mn, As, Fe, Cr, Nitrate, Sulfate, TOC, Alkalinity
K-RS691	K-RS691 -GW- AAR3289 -REG	NA			TCL VOC, Perchlorate, Explosives+, Dissolved Gases, T/D Mn, As, Fe, Cr, Nitrate, Sulfate, TOC, Alkalinity
K142-RS1223	K142-RS1223 -GW- AAR3290 -REG	NA			TCL VOC, Perchlorate, Explosives+, Dissolved Gases, T/D Mn, As, Fe, Cr, Nitrate, Sulfate, TOC, Alkalinity
K204-RS1550	K204-RS1550 -GW- AAR3291 -REG	NA	K204-RS1550-GW-AAR3292-FD		TCL VOC, Perchlorate, Explosives+, Dissolved Gases, T/D Mn, As, Fe, Cr, Nitrate, Sulfate, TOC, Alkalinity
204-RS2027	204-RS2027 -GW- AAR3293 -REG	NA			TCL VOC, Perchlorate, Explosives+, Dissolved Gases, T/D Mn, As, Fe, Cr, Nitrate, Sulfate, TOC, Alkalinity
204-RS2029	204-RS2029 -GW- AAR3294 -REG	NA			TCL VOC, Perchlorate, Explosives+, Dissolved Gases, T/D Mn, As, Fe, Cr, Nitrate, Sulfate, TOC, Alkalinity
204-RS2030	204-RS2030 -GW- AAR3295 -REG	NA			TCL VOC, Perchlorate, Explosives+, Dissolved Gases, T/D Mn, As, Fe, Cr, Nitrate, Sulfate, TOC, Alkalinity
204-RS2031	204-RS2031 -GW- AAR3296 -REG	NA			TCL VOC, Perchlorate, Explosives+, Dissolved Gases, T/D Mn, As, Fe, Cr, Nitrate, Sulfate, TOC, Alkalinity
204-RS2032	204-RS2032 -GW- AAR3297 -REG	NA			TCL VOC, Perchlorate, Explosives+, Dissolved Gases, T/D Mn, As, Fe, Cr, Nitrate, Sulfate, TOC, Alkalinity
204-RS2033	204-RS2033 -GW- AAR3298 -REG	NA			TCL VOC, Perchlorate, Explosives+, Dissolved Gases, T/D Mn, As, Fe, Cr, Nitrate, Sulfate, TOC, Alkalinity
204-RS2034	204-RS2034 -GW- AAR3299 -REG	NA			TCL VOC, Perchlorate, Explosives+, Dissolved Gases, T/D Mn, As, Fe, Cr, Nitrate, Sulfate, TOC, Alkalinity
204-RS2668	204-RS2668 -GW- AAR3300 -REG	NA		204-RS2688-GW-AAR3300-MS/MSD	TCL VOC, Perchlorate, Explosives+, Dissolved Gases, T/D Mn, As, Fe, Cr, Nitrate, Sulfate, TOC, Alkalinity

Table 3-1

Sampling Locations and Methods
RSA-204
Redstone Arsenal, Madison County, Alabama

Sample Location	Sample Designation	Sample Depth (ft bgs)	QA/QC Sample Designation		Analytical Suite
			FD*	MS/MSD*	
204-RS2670	204-RS2670 -GW- AAR3301 -REG	NA			TCL VOC, Perchlorate, Explosives+, Dissolved Gases, T/D Mn, As, Fe, Cr, Nitrate, Sulfate, TOC, Alkalinity
204-RS2672	204-RS2672 -GW- AAR3302 -REG	NA			TCL VOC, Perchlorate, Explosives+, Dissolved Gases, T/D Mn, As, Fe, Cr, Nitrate, Sulfate, TOC, Alkalinity
204-RS2673	204-RS2673 -GW- AAR3303 -REG	NA			TCL VOC, Perchlorate, Explosives+, Dissolved Gases, T/D Mn, As, Fe, Cr, Nitrate, Sulfate, TOC, Alkalinity
204-RS2674	204-RS2674 -GW- AAR3304 -REG	NA			TCL VOC, Perchlorate, Explosives+, Dissolved Gases, T/D Mn, As, Fe, Cr, Nitrate, Sulfate, TOC, Alkalinity
204-RS2675	204-RS2675 -GW- AAR3305 -REG	NA	204-RS2675-GW-AAR3306-FD		TCL VOC, Perchlorate, Explosives+, Dissolved Gases, T/D Mn, As, Fe, Cr, Nitrate, Sulfate, TOC, Alkalinity
204-RS2676	204-RS2676 -GW- AAR3307 -REG	NA			TCL VOC, Perchlorate, Explosives+, Dissolved Gases, T/D Mn, As, Fe, Cr, Nitrate, Sulfate, TOC, Alkalinity
204-RS2677	204-RS2677 -GW- AAR3308 -REG	NA		204-RS2677-GW-AAR3308-MS/MSD	TCL VOC, Perchlorate, Explosives+, Dissolved Gases, T/D Mn, As, Fe, Cr, Nitrate, Sulfate, TOC, Alkalinity
204-RS2678	204-RS2678 -GW- AAR3309 -REG	NA			TCL VOC, Perchlorate, Explosives+, Dissolved Gases, T/D Mn, As, Fe, Cr, Nitrate, Sulfate, TOC, Alkalinity
204-RS2683	204-RS2683 -GW- AAR3310 -REG	NA			TCL VOC, Perchlorate, Explosives+, Dissolved Gases, T/D Mn, As, Fe, Cr, Nitrate, Sulfate, TOC, Alkalinity
204-RS2791	204-RS2791 -GW- AAR3311 -REG	NA			TCL VOC, Perchlorate, Explosives+, Dissolved Gases, T/D Mn, As, Fe, Cr, Nitrate, Sulfate, TOC, Alkalinity
204-RS2792	204-RS2792 -GW- AAR3312 -REG	NA			TCL VOC, Perchlorate, Explosives+, Dissolved Gases, T/D Mn, As, Fe, Cr, Nitrate, Sulfate, TOC, Alkalinity
204-RS2793	204-RS2793 -GW- AAR3313 -REG	NA	204-RS2793-GW-AAR3314-FD		TCL VOC, Perchlorate, Explosives+, Dissolved Gases, T/D Mn, As, Fe, Cr, Nitrate, Sulfate, TOC, Alkalinity
204-RS2794	204-RS2794 -GW- AAR3315 -REG	NA			TCL VOC, Perchlorate, Explosives+, Dissolved Gases, T/D Mn, As, Fe, Cr, Nitrate, Sulfate, TOC, Alkalinity
204-RS824	204-RS2824 -GW- AAR3316 -REG	NA			TCL VOC, Perchlorate, Explosives+, Dissolved Gases, T/D Mn, As, Fe, Cr, Nitrate, Sulfate, TOC, Alkalinity

Table 3-1

Sampling Locations and Methods
RSA-204
Redstone Arsenal, Madison County, Alabama

Sample Location	Sample Designation	Sample Depth (ft bgs)	QA/QC Sample Designation		Analytical Suite
			FD*	MS/MSD*	
IDW Water Samples					
204-SITE	204-SITE -WA- AAR9094 -REG	NA			TCL VOCs, Explosives+, Perchlorate
204-SITE	204-SITE -WA- AAR9095 -REG	NA			TCL VOCs, Explosives+, Perchlorate
204-SITE	204-SITE -WA- AAR9096 -REG	NA			TCL VOCs, Explosives+, Perchlorate
204-SITE	204-SITE -WA- AAR9097 -REG	NA			TCL VOCs, Explosives+, Perchlorate

*The MS/MSD/FD locations are subject to change due to field conditions. Project chemist will be notified and database updated accordingly.

FD - Field duplicate.
ft bgs - Feet below ground surface.
GW - Groundwater.
MS - Matrix spike.
MSD - Matrix spike duplicate.
NA - Not applicable.
QA - Quality assurance.
QC - Quality control.
REG - Regular.

Table 3-2

Field Quality Control Summary
RSA-204
Redstone Arsenal, Madison County, Alabama

Parameters	Analytical Method	Matrix	Total Number of Samples	FD	MS	MSD	Equip. Rinsate (1/event)	Trip Blank (1/cooler)	TAT Needed[a]	Sample Container/Preservation Requirements[b]	Holding Time	Total Number of Containers
RSA-204												
Groundwater Samples Year 1 Round 1												
TCL VOCs	5030B/8260B	Water	26	3	2	2	2	5	Normal	3 x 40ml vials w/septa; HCl to pH<2	14 days	120
Perchlorate	6850	Water	26	3	2	2	2	0	Normal	125mL poly (filter thru 0.2 micron filter); headspace required	28 days	35
Explosives+	8330A	Water	26	3	2	2	2	0	Normal	2 x 1L amber	7 days extraction; 40 days analysis	70
Dissolved Gases	RSK-175	Water	26	3	2	2	2	0	Normal	3 x 40ml vials w/septa; HCl to pH<2	14 days	105
T/D Mn,As,Fe,Cr	3005A/6010C	Water	52	3	2	2	2	0	Normal	2 x 1L amber	6 months	92
TOC	9060	Water	26	3	2	2	2	0	Normal	250 m HPDE; H_2SO_4 ph<2	28 days	35
Alkalinity	SM2320B	Water	26	3	2	2	2	0	Normal	1 x 250 ml	14 days	35
Nitrate/Sulfate	300	Water	26	3	2	2	2	0	Normal	1 x 500 ml	48 hours	35
IDW Water												
TCL VOCs	5030B/8260B	Water	4	0	0	0	0	0	Normal	3 x 40-mL vials w/ septa; HCl to pH<2	14 days	12
Explosives+	8330A	Water	4	0	0	0	0	0	Normal	2 x 1L amber	7 days extraction; 40 days analysis	8
Perchlorate	6850	Water	4	0	0	0	0	0	Normal	125mL poly (filter thru 0.2 micron filter); headspace required	28 days	4
Groundwater Samples Year 1 Round 2												
TCL VOCs	5030B/8260B	Water	26	3	2	2	2	5	Normal	3 x 40ml vials w/septa; HCl to pH<2	14 days	120
Perchlorate	6850	Water	26	3	2	2	2	0	Normal	125mL poly (filter thru 0.2 micron filter); headspace required	28 days	35
Explosives+	8330A	Water	26	3	2	2	2	0	Normal	2 x 1L amber	7 days extraction; 40 days analysis	70
Dissolved Gases	RSK-175	Water	26	3	2	2	2	0	Normal	3 x 40ml vials w/septa; HCl to pH<2	14 days	105
T/D Mn,As,Fe,Cr	3005A/6010C	Water	52	3	2	2	2	0	Normal	2 x 1L amber	6 months	92
TOC	9060	Water	26	3	2	2	2	0	Normal	250 m HPDE; H_2SO_4 ph<2	28 days	35
Alkalinity	SM2320B	Water	26	3	2	2	2	0	Normal	1 x 250 ml	14 days	35
Nitrate/Sulfate	300	Water	26	3	2	2	2	0	Normal	1 x 500 ml	48 hours	35

Table 3-2

Field Quality Control Summary
RSA-204
Redstone Arsenal, Madison County, Alabama

Parameters	Analytical Method	Matrix	Total Number of Samples	FD	MS	MSD	Equip. Rinsate (1/event)	Trip Blank (1/cooler)	TAT Needed[a]	Sample Container/Preservation Requirements[b]	Holding Time	Total Number of Containers
IDW Water												
TCL VOCs	5030B/8260B	Water	4	0	0	0	0	0	Normal	3 x 40-mL vials w/ septa; HCl to pH<2	14 days	12
Explosives+	8330A	Water	4	0	0	0	0	0	Normal	2 x 1L amber	7 days extraction; 40 days analysis	8
Perchlorate	6850	Water	4	0	0	0	0	0	Normal	125mL poly (filter thru 0.2 micron filter); headspace required	28 days	4
Groundwater Samples Year 1 Round 3												
TCL VOCs	5030B/8260B	Water	26	3	2	2	2	5	Normal	3 x 40ml vials w/septa; HCl to pH<2	14 days	120
Perchlorate	6850	Water	26	3	2	2	2	0	Normal	125mL poly (filter thru 0.2 micron filter); headspace required	28 days	35
Explosives+	8330A	Water	26	3	2	2	2	0	Normal	2 x 1L amber	7 days extraction; 40 days analysis	70
Dissolved Gases	RSK-175	Water	26	3	2	2	2	0	Normal	3 x 40ml vials w/septa; HCl to pH<2	14 days	105
T/D Mn,As,Fe,Cr	3005A/6010C	Water	52	3	2	2	2	0	Normal	2 x 1L amber	6 months	92
TOC	9060	Water	26	3	2	2	2	0	Normal	250 m HPDE; H_2SO_4 ph<2	28 days	35
Alkalinity	SM2320B	Water	26	3	2	2	2	0	Normal	1 x 250 ml	14 days	35
Nitrate/Sulfate	300	Water	26	3	2	2	2	0	Normal	1 x 500 ml	48 hours	35
IDW Water												
TCL VOCs	5030B/8260B	Water	4	0	0	0	0	0	Normal	3 x 40-mL vials w/ septa; HCl to pH<2	14 days	12
Explosives+	8330A	Water	4	0	0	0	0	0	Normal	2 x 1L amber	7 days extraction; 40 days analysis	8
Perchlorate	6850	Water	4	0	0	0	0	0	Normal	125mL poly (filter thru 0.2 micron filter); headspace required	28 days	4
Groundwater Samples Year 1 Round 4												
TCL VOCs	5030B/8260B	Water	26	3	2	2	2	5	Normal	3 x 40ml vials w/septa; HCl to pH<2	14 days	120
Perchlorate	6850	Water	26	3	2	2	2	0	Normal	125mL poly (filter thru 0.2 micron filter); headspace required	28 days	35
Explosives+	8330A	Water	26	3	2	2	2	0	Normal	2 x 1L amber	7 days extraction; 40 days analysis	70
Dissolved Gases	RSK-175	Water	26	3	2	2	2	0	Normal	3 x 40ml vials w/septa; HCl to pH<2	14 days	105
T/D Mn,As,Fe,Cr	3005A/6010C	Water	52	3	2	2	2	0	Normal	2 x 1L amber	6 months	92
TOC	9060	Water	26	3	2	2	2	0	Normal	250 m HPDE; H_2SO_4 ph<2	28 days	35

Table 3-2

Field Quality Control Summary
RSA-204
Redstone Arsenal, Madison County, Alabama

Parameters	Analytical Method	Matrix	Total Number of Samples	FD	MS	MSD	Equip. Rinsate (1/event)	Trip Blank (1/cooler)	TAT Needed[a]	Sample Container/Preservation Requirements[b]	Holding Time	Total Number of Containers
Alkalinity	SM2320B	Water	26	3	2	2	2	0	Normal	1 x 250 ml	14 days	35
Nitrate/Sulfate	300	Water	26	3	2	2	2	0	Normal	1 x 500 ml	48 hours	35
IDW Water												
TCL VOCs	5030B/8260B	Water	4	0	0	0	0	0	Normal	3 x 40-mL vials w/ septa; HCl to pH<2	14 days	12
Explosives+	8330A	Water	4	0	0	0	0	0	Normal	2 x 1L amber	7 days extraction; 40 days analysis	8
Perchlorate	6850	Water	4	0	0	0	0	0	Normal	125mL poly (filter thru 0.2 micron filter); headspace required	28 days	4
Groundwater Samples Year 2 Round 1												
TCL VOCs	5030B/8260B	Water	26	3	2	2	2	5	Normal	3 x 40ml vials w/septa; HCl to pH<2	14 days	120
Perchlorate	6850	Water	26	3	2	2	2	0	Normal	125mL poly (filter thru 0.2 micron filter); headspace required	28 days	35
Explosives+	8330A	Water	26	3	2	2	2	0	Normal	2 x 1L amber	7 days extraction; 40 days analysis	70
Dissolved Gases	RSK-175	Water	26	3	2	2	2	0	Normal	3 x 40ml vials w/septa; HCl to pH<2	14 days	105
T/D Mn,As,Fe,Cr	3005A/6010C	Water	52	3	2	2	2	0	Normal	2 x 1L amber	6 months	92
TOC	9060	Water	26	3	2	2	2	0	Normal	250 m HPDE; H_2SO_4 ph<2	28 days	35
Alkalinity	SM2320B	Water	26	3	2	2	2	0	Normal	1 x 250 ml	14 days	35
Nitrate/Sulfate	300	Water	26	3	2	2	2	0	Normal	1 x 500 ml	48 hours	35
IDW Water												
TCL VOCs	5030B/8260B	Water	4	0	0	0	0	0	Normal	3 x 40-mL vials w/ septa; HCl to pH<2	14 days	12
Explosives+	8330A	Water	4	0	0	0	0	0	Normal	2 x 1L amber	7 days extraction; 40 days analysis	8
Perchlorate	6850	Water	4	0	0	0	0	0	Normal	125mL poly (filter thru 0.2 micron filter); headspace required	28 days	4
Groundwater Samples Year 2 Round 2												
TCL VOCs	5030B/8260B	Water	26	3	2	2	2	5	Normal	3 x 40ml vials w/septa; HCl to pH<2	14 days	120
Perchlorate	6850	Water	26	3	2	2	2	0	Normal	125mL poly (filter thru 0.2 micron filter); headspace required	28 days	35
Explosives+	8330A	Water	26	3	2	2	2	0	Normal	2 x 1L amber	7 days extraction; 40 days analysis	70
Dissolved Gases	RSK-175	Water	26	3	2	2	2	0	Normal	3 x 40ml vials w/septa; HCl to pH<2	14 days	105

Table 3-2

Field Quality Control Summary
RSA-204
Redstone Arsenal, Madison County, Alabama

Parameters	Analytical Method	Matrix	Total Number of Samples	FD	MS	MSD	Equip. Rinsate (1/event)	Trip Blank (1/cooler)	TAT Needed[a]	Sample Container/Preservation Requirements[b]	Holding Time	Total Number of Containers
T/D Mn,As,Fe,Cr	3005A/6010C	Water	52	3	2	2	2	0	Normal	2 x 1L amber	6 months	92
TOC	9060	Water	26	3	2	2	2	0	Normal	250 m HPDE; H_2SO_4 ph<2	28 days	35
Alkalinity	SM2320B	Water	26	3	2	2	2	0	Normal	1 x 250 ml	14 days	35
Nitrate/Sulfate	300	Water	26	3	2	2	2	0	Normal	1 x 500 ml	48 hours	35
IDW Water												
TCL VOCs	5030B/8260B	Water	4	0	0	0	0	0	Normal	3 x 40-mL vials w/ septa; HCl to pH<2	14 days	12
Explosives+	8330A	Water	4	0	0	0	0	0	Normal	2 x 1L amber	7 days extraction; 40 days analysis	8
Perchlorate	6850	Water	4	0	0	0	0	0	Normal	125mL poly (filter thru 0.2 micron filter); headspace required	28 days	4
Groundwater Samples Year 3 Round 1												
TCL VOCs	5030B/8260B	Water	26	3	2	2	2	5	Normal	3 x 40ml vials w/septa; HCl to pH<2	14 days	120
Perchlorate	6850	Water	26	3	2	2	2	0	Normal	125mL poly (filter thru 0.2 micron filter); headspace required	28 days	35
Explosives+	8330A	Water	26	3	2	2	2	0	Normal	2 x 1L amber	7 days extraction; 40 days analysis	70
Dissolved Gases	RSK-175	Water	26	3	2	2	2	0	Normal	3 x 40ml vials w/septa; HCl to pH<2	14 days	105
T/D Mn,As,Fe,Cr	3005A/6010C	Water	52	3	2	2	2	0	Normal	2 x 1L amber	6 months	92
TOC	9060	Water	26	3	2	2	2	0	Normal	250 m HPDE; H_2SO_4 ph<2	28 days	35
Alkalinity	SM2320B	Water	26	3	2	2	2	0	Normal	1 x 250 ml	14 days	35
Nitrate/Sulfate	300	Water	26	3	2	2	2	0	Normal	1 x 500 ml	48 hours	35
IDW Water												
TCL VOCs	5030B/8260B	Water	4	0	0	0	0	0	Normal	3 x 40-mL vials w/ septa; HCl to pH<2	14 days	12
Explosives+	8330A	Water	4	0	0	0	0	0	Normal	2 x 1L amber	7 days extraction; 40 days analysis	8
Perchlorate	6850	Water	4	0	0	0	0	0	Normal	125mL poly (filter thru 0.2 micron filter); headspace required	28 days	4
Groundwater Samples Year 3 Round 2												
TCL VOCs	5030B/8260B	Water	26	3	2	2	2	5	Normal	3 x 40ml vials w/septa; HCl to pH<2	14 days	120
Perchlorate	6850	Water	26	3	2	2	2	0	Normal	125mL poly (filter thru 0.2 micron filter); headspace required	28 days	35
Explosives+	8330A	Water	26	3	2	2	2	0	Normal	2 x 1L amber	7 days extraction; 40 days analysis	70

Table 3-2

Field Quality Control Summary
RSA-204
Redstone Arsenal, Madison County, Alabama

Parameters	Analytical Method	Matrix	Total Number of Samples	FD	MS	MSD	Equip. Rinsate (1/event)	Trip Blank (1/cooler)	TAT Needed[a]	Sample Container/Preservation Requirements[b]	Holding Time	Total Number of Containers
Dissolved Gases	RSK-175	Water	26	3	2	2	2	0	Normal	3 x 40ml vials w/septa; HCl to pH<2	14 days	105
T/D Mn,As,Fe,Cr	3005A/6010C	Water	52	3	2	2	2	0	Normal	2 x 1L amber	6 months	92
TOC	9060	Water	26	3	2	2	2	0	Normal	250 m HPDE; H_2SO_4 ph<2	28 days	35
Alkalinity	SM2320B	Water	26	3	2	2	2	0	Normal	1 x 250 ml	14 days	35
Nitrate/Sulfate	300	Water	26	3	2	2	2	0	Normal	1 x 500 ml	48 hours	35
IDW Water												
TCL VOCs	5030B/8260B	Water	4	0	0	0	0	0	Normal	3 x 40-mL vials w/ septa; HCl to pH<2	14 days	12
Explosives+	8330A	Water	4	0	0	0	0	0	Normal	2 x 1L amber	7 days extraction; 40 days analysis	8
Perchlorate	6850	Water	4	0	0	0	0	0	Normal	125mL poly (filter thru 0.2 micron filter); headspace required	28 days	4

[a] Sample deliverables should include a Level IV, CLP-like data package and EDD for all samples with the exception of IDW samples that require certificates of analysis and EDD only.
[b] All samples should be cooled to 4 degrees Celsius in conjunction with preservation requirements noted prior to shipment to the laboratory

FD - Field duplicate.
MS - Matrix spike.
MSD - Matrix spike duplicate.
TAT - Turnaround time.

FIGURES

Eagle Road
204-RS2034
204-RS2033
204-RS2824
07687
K204-RS1550
204-RS2683
204-RS2028
204-RS2027
204-RS2668
204-RS2682
204-RS2679
204-RS2678
204-RS2680
204-RS2677
204-RS2794
204-RS2681
204-RS2032
204-RS2793
10,000
1,000
204-RS2029
K142-RS1223
Excavation Area 2
07691
204-RS2676
K-RS691
07688
RSA-204
Swan Road
Magazine Road
Falcon Road
204-RS2670
204-RS2675
204-RS2674
Excavation Area 1
204-RS2673
204-RS2791
10,000
07689
204-RS2792
204-RS2031
07690
204-RS2672
K-RS690
204-RS2030

Legend

- Proposed Interface Well
- Bedrock Well
- Interface Well
- Overburden Well
- Long Term Monitoring Location
- Proposed Excavation
- Perchlorate Isoconcentration Lines (Perchlorate unit in micrograms per liter dashed where inferred)
- Trichloroethene Isoconcentration Lines (Trichloroethene unit in micrograms per liter dashed where inferred)
- Surface Drainage Features (Some Ephemeral)
- Roads
- Buildings
- Removed Structure
- Site Boundary

Figure K-1

RSA-204
Long Term Monitoring Locations for Groundwater

Redstone Arsenal
Madison County, Alabama
Contract No. W91ZLK-09-D-0006

1 inch = 100 feet

0 50 100 200 Feet

NAD 1983 State Plane Alabama East Feet

CB&I Federal Services LLC

H:\Redstone\GIS_Documents\Project_maps\RSA_204\RSA_204_CMIP_May2016\RSA_204_Performance_Monitoring_Locations_in_Groundwater.mxd

ATTACHMENT 1

ENGINEERED CAP AND LAND USE CONTROL INSPECTION CHECKLIST

Enginnered Cap and Land-Use Control Inspection Checklist
RSA-204
Redstone Arsenal
Madison County, Alabama

Inspection Items	Findings/Existing Conditions	Actions Needed	Date Action Completed
Land Use Controls Inspection			
Have signs been installed and maintained warning of land use restrictions and prohibitions?			
Are there signs the cap has been disturbed such as recent construction activity?			
Is Building 7689 still present over soil that must remain covered?			
Engineered Cap Inspection			
Cover Integrity. Note any areas where pavement has been disturbed (e.g., erosion damage such as heaving or cracking).			
Vectors. Note any evidence of burrowing by animals within or adjacent to the cap.			
Drainage. Note condition of drainage channels and culverts. Note any areas with ponding.			
Is the vegetation adjacent to the capped area being maintained in accordance with the work plan?			
Have repairs been conducted for disturbances or breaches of the cap?			

Site/SWMU Inspected: _____
Weather Conditions: _____
Date of Inspection: _____
Printed Name/Organization: _____
Signature: _____

RESPONSES TO COMMENTS

Revision 1 RSA-204 CMI Work Plan (July 2016)
Comment Summary
Redstone Arsenal, Madison County, Alabama

Comment Number	Location Addressed in Revision 2 CMI Work Plan	Note
Comments from ADEM dated August 24, 2016.		
ADEM Specific Comments, Revision 1 CMI Work Plan		
1	Section 4.16.2.2 and Appendix K (Section 4.2)	Text will be revised in Section 4.16.2.2 and Appendix K to address the necessary elements in ADEM Administrative Code Rule 335-14-5-.06(10).
2a	Appendix K (Section 3.2)	Text will be revised in Appendix K to note that all proposed monitoring wells will be sampled for TCL VOCs, perchlorate, explosives, and water quality and MNA parameters, as presented in Table 3-1.
2b	Sections 4.3 and 4.16.2, Figure 4-3, and Appendix K (Sections 3.1 and 3.2, Tables 3-1 and 3-2, and Figure K-1)	Wells K-RS691 and 204-RS2030 will be added to Appendix K and to Figure 4-3 in the main CMI Work Plan. Additionally, the number of monitoring locations will be increased from 23 to 26 wells in the main CMI Work Plan (Sections 3.2 and 4.3) and Appendix K.
ADEM Specific Comments, Response to Comments (RTC) Attachment within the Revision 1 CMI WP		
1	Section 4.3, Figure 4-3, and Appendix K (Sections 3.1 and 3.2, Tables 3-1 and 3-2, and Figure K-1)	A Rev. 2 CMI Work Plan will be submitted for review and approval.
2	Sections 4.3 and 4.16.2, Figure 4-3, and Appendix K (Sections 3.1 and 3.2, Tables 3-1 and 3-2, and Figure K-1)	Overburden well 204-RS2027 will be added to Appendix K and to Figure 4-3 within the main CMI work plan. Additionally, the number of monitoring locations will be increased from 23 to 26 wells in Sections 4.3 and 4.16.2 of the main CMI work plan text and Section 3.1 in Appendix K.

Responses to Alabama Department of Environmental Management Review Comments on the Revision 1 Corrective Measures Implementation Work Plan RSA-204, Oxidizer Facility, Building 7691 Redstone Arsenal, Madison County, Alabama Dated July 2016

Comments received on August 24, 2016 from Mr. Krishna Morrissette, Facilities Engineering Section (dated August 22, 2016).

Specific Comments

Comment 1: **Pages 4-27 through 4-30, Section 4.16, Post-Construction Scheduled Activities: The Department has determined that the future reporting of results from implementing this CMI WP would not address all of the necessary elements for compliance monitoring of the ground water as prescribed in ADEM Administrative Code Rule 335-14-5-.06(10). This CMI WP for RSA-204 will be implementing groundwater corrective actions as a part of RSA-204 instead of deferring these actions to the GW unit RSA-146, so it is necessary for the groundwater corrective actions at RSA-204 to comply with the compliance monitoring requirements in ADEM Administrative Code Rule 335-14-5-.06(10). It has been noted that this CMI WP did reference portions of this regulation with respect to the statistical analysis, i.e. ADEM Administrative Code Rule 335-14-5-.06(8)(h) as referenced in 335-14-5-.06(10)(c). However, there are other necessary elements, such as ADEM Administrative Code Rules 335-14-5-.06(10)(d) , 335-14-5-.06(10)(e), and 335-14-5-.06(10)(f), that the Department will expect the Army to address in the report of findings for the Corrective Measures Report. The Army should add language in Section 4.16 and Appendix K to ensure that the necessary elements in ADEM Administrative Code Rule 335-14-5-.06(10) are followed. Please revise the work plan to include this information.**

Response 1: CM Effectiveness Reporting will include sufficient information to be compliant with ADEM Administrative Code Rule 335-14-5-.06(10), which states that a compliance monitoring program must be implemented and maintained as long as necessary to achieve compliance with the CGs. Specifically, the RSA-204 compliance monitoring program will address provisions for determining whether there is statistically significant evidence of increased contamination for any chemical parameter or hazardous constituent pursuant to ADEM AAC Rule 335-14-5-.06(10)(d) and ADEM AAC Rule 335-14-5-.06(10)(f). In determining whether statistically significant evidence of increased contamination exists, RSA will use the method(s) specified under ADEM AAC Rule 335-14-5-.06(8)(h). Additionally, the flow rate and flow

direction for groundwater in the overburden/interface zone beneath the site will be determined annually (ADEM AAC Rule 335-14-5-.06(10)(e).

Text revisions in Section 4.16.2.2 and Appendix K, Section 4.2 include the following:

"Based on the proposed sampling schedule, an annual CMI effectiveness report will be prepared after four quarters of data collection for the first year of the LTM and then after two semiannual data collection events for the following two years to demonstrate the effectiveness and success of the final corrective action program for RSA-204 groundwater. The effectiveness report will be compliant with provisions of the ADEM Administrative Code Rule 335-14-5-.06(10), which states that a compliance monitoring program must be implemented encompassing the extent of the contaminant plumes, and be maintained as long as necessary to achieve compliance with the CGs. The annual report will discuss the most recent sampling events and relate the findings as they pertain to treatment performance for the groundwater contaminants. The groundwater flow rate and direction in the overburden/interface zone will be determined annually and the data and maps will be included in the effectiveness report pursuant to ADEM AAC Rule 335-14-5-.06(10)(e). The RSA-204 compliance monitoring program will include provisions for determining whether there is statistically significant evidence of increased contamination for any chemical parameter or hazardous constituent pursuant to ADEM AAC Rule 335-14-5-.06(10)(d) and ADEM AAC Rule 335-14-5-.06(10)(f).

Recommendations for changes to the sampling frequency, wells sampled, and parameters for analysis, if appropriate, will be included in the reports. At a minimum, the groundwater monitoring report will include a discussion of sampling activities, tables, and maps to document contaminant concentrations in groundwater, and an evaluation of the groundwater contaminant data. Other recommendations may include installation of additional monitoring wells and resampling for verification of sampling results. Record keeping for data and reports are described in the installation-wide QAPP (Shaw, 2013b)."

Comment 2: **<u>Appendix K, Long-Term Groundwater Monitoring, Section 3.2, Proposed Monitoring Wells:</u>**

a. Within this section of the CMI WP, the Army provided a table that presented the rationale for the inclusion of each of the proposed monitoring wells. Based on the provided rationale, it could be misinterpreted to state that these proposed monitoring wells would not be sampled for all of the chemicals of concern (Volatile Organic Compounds, Perchlorate, and Explosives) for RSA-204 as described in Table 3-1 of Appendix K. The Army should include a statement in Section 3.2 confirming that all of the proposed monitoring wells

will be sampled for all of the chemicals of concern at this site. Please revise the work plan to reflect this information.

Response 2a: The following statement will be added to the end of Section 3.2 in Appendix K: "All proposed monitoring wells will be sampled for TCL VOCs, perchlorate, explosives, and water quality and MNA parameters, as presented in Table 3-1."

b. There was no rationale given on why overburden monitoring wells K-RS691 and 204-RS2030 were not included as a long term monitoring location for groundwater as described on Figure K-1. Sampling both of these monitoring wells would provide the Army additional groundwater data upgradient of RSA-204. Please revise the work plan to reflect this information.

Response 2b: Wells K-RS691 and 204-RS2030 will be included in the monitoring program and added to Section 3.2, Tables 3-1 and 3-2, and Figure K-1 in Appendix K and to Figure 4-3 in the main CMI Work Plan. Additionally, the number of monitoring locations will be increased from 23 to 26 wells (to include K-RS691 and 204-RS2030 as well as 204-RS2027 [Comment 2 below]) in Sections 4.3 and 4.16.2 of the main CMI work plan text and Section 3.1 in Appendix K.

Response to Comments (RTC) Attachment within the Revision 1 CMI WP

Comment 1: **General Comment: Based on this review, ADEM has determined that most comments were resolved and the revisions proposed were incorporated into this Revision 1 CMI WP. However, comments, which were not completely addressed, are provided in the following comments below. A revised report or appropriate revisions to the CMI WP addressing all comments should be submitted to the Department for review.**

Response 1: Comment noted. A Revision 2 CMI Work Plan will be submitted for ADEM review and concurrence.

Comment 2: **ADEM RTC Army Response 14: The RTC attachment to the Revision 1 CMI WP includes the following statement as part of the Army's final responses:** ***"The two requested wells 204-RS2027 and 204-RS2033 and the new well (204-RS2824) in the northwest corner of the site will be added to the long term monitoring plan in Appendix K (Section 3.2, Tables 3-1 and 3-2, and Figure K-1) and to Figure 4-3 within the main CMI work plan."*** **This response from the Army indicated that the Department's comment would be addressed; however, it was not completely incorporated into the Revision 1 CMI WP. Overburden monitoring well 204-RS2027 was not added to the groundwater long-term monitoring locations as described in Appendix K and Figure 4-3 within the main CMIWP.**

Please revise the work plan to reflect this information.

Response 2: Overburden well 204-RS2027 will be added to the Long-term Monitoring Plan in Appendix K (Section 3.2, Tables 3-1 and 3-2, and Figure K-1) and to Figure 4-3 within the main CMI work plan. Additionally, the number of monitoring locations will be increased from 23 to 26 wells (to include 204-RS2027 as well as K-RS691 and 204-RS2030 [Comment 2b above]) in Sections 4.3 and 4.16.2 of the main CMI work plan text and Section 3.1 in Appendix K.

With the exception of tables and figures, this redline strikeout reflects all changes and revisions to the previously submitted ***Revision 1, Corrective Measures Implementation Work Plan, RSA-204, Oxidizer Facility, Building 7691, Operable Unit 10, US Army Garrison-Redstone, Madison County,*** Alabama (CB&I, July 2016).

Revision ~~1~~2
Corrective Measures Implementation Work Plan
RSA-204, Oxidizer Facility, Building 7691
Operable Unit 10
U.S. Army Garrison-Redstone
Madison County, Alabama
EPA ID No. AL7 210 020 742

Prepared for:

Mission & Installation Contracting Command
ATTN: MICC Center – FSH
2107 17th Street
Building 4197, Suite 15
Fort Sam Houston, Texas 78234-5015

Prepared by:

CB&I Federal Services LLC
2410 Cherahala Boulevard
Knoxville, Tennessee 37932

Contract No. W91ZLK-09-D-0006
CB&I Project No. 147104
Task Order 0008

~~July~~September 2016

Revision ~~1~~2
Corrective Measures Implementation Work Plan
RSA-204, Oxidizer Facility, Building 7691
Operable Unit 10
U.S. Army Garrison-Redstone
Madison County, Alabama
EPA ID No. AL7 210 020 742

Certification

I certify under penalty of law that this document and all attachments were prepared under my direction or supervision in accordance with a system designed to assure that qualified personnel properly gather and evaluate the information submitted. Based on my inquiry of the person or persons who manage the system, or those persons directly responsible for gathering the information, the information submitted is, to the best of my knowledge and belief, true, accurate, and complete. I am aware that there are significant penalties for submitting false information, including the possibility of fine and imprisonment for knowing violations.

_____ _____

C. Scott Wilson Date
Alabama PE No. 28340

Corrective measures are necessary at RSA-204 to address the following:

SWMU	COCs in Vadose Zone Soil Requiring Action	COCs in Groundwater Requiring Action	SWMU Responsible for Groundwater Corrective Action
RSA-204	Failing industrial risk: None	Perchlorate, TCE, 2-Nitrotoluene, 2,6-Dinitrotoluene, RDX	RSA-204
	Failing residential risk: None		
	Exhibiting a leaching concern to groundwater: Perchlorate		
	Exhibiting a potential soil vapor concern: None		

around and beneath the devices will immediately be repaired. Upon completion of the project, erosion and sedimentation control devices will be removed.

4.2.5 Vegetation Clearing

As necessary, CB&I will clear brush and vegetation currently covering the injection and excavation areas at RSA-204 in preparation for the groundwater treatment and soil removal action. Vegetation (briers, shrubs and trees) will be removed from the proposed excavation areas and chipped for mulch (beneficial use) for Army reuse or sale. Any trees located within the excavation area less than or equal to 2 feet in diameter will be cut at grade and either chipped and stockpiled within the footprint of the excavation area or transported to the construction and demolition (C&D) landfill. The root systems for the trees within the proposed excavation area that are cut at grade will be stockpiled and disposed of with the contaminated soil. Those outside the excavation area (i.e., within staging areas) will be disposed at the C&D landfill.

4.2.6 Locating, Marking, and Surveying of Injection Locations and Excavation Areas

A licensed land surveyor will be subcontracted to delineate the project work boundary, mark the DPT injection locations and excavation areas, mark the boundaries of the localized cap at Building 7689, and set the grades prior to and during placement of excavated material and again during backfilling activities. The surveyor will locate these areas based on coordinates provided by CB&I and mark items in the field with highly visible wooden stakes, tape, or pin flags. Surveying methods will follow the procedures specified in the Construction Quality Assurance Plan (CQAP) (Appendix E). The ISEB injection locations and excavation areas are shown on Figure 4-1 and Figure 4-2, respectively. The cap area is shown in Figure 4-6.

4.2.7 Well Installation

A new interface monitoring well (204-RS2824) will be installed in the northwest corner of the site in accordance with the procedures outlined in Standard Operating Project Procedure (SOPP) No. 17, *Monitoring Well Installation* (Shaw, 2013b). The interface well is anticipated to be 2-inch-diameter Schedule 40 polyvinyl chloride, with a 10-foot screen, completed with aboveground protective casings and guard posts, and completed to an estimated depth of 30 feet. Upon completion, the well will be developed in accordance with SOPP No. 8, *Well Development* (Shaw, 2013b). The well location is illustrated on Figure 4-3.

4.3 Baseline Groundwater Sampling and Well Closure and Replacement

Prior to substrate injection, baseline groundwater monitoring will be performed to define the pretreatment water quality conditions across the treatment area. Baseline groundwater samples will be collected for laboratory analysis from ~~23~~26 overburden, interface, and shallow bedrock

If the property is transferred to an owner that is not the federal government, an environmental ~~covenant~~restriction will be executed and filed at that time in accordance with AAC 335-5 (ADEM, 2009).

4.15 Corrective Measures Implementation Reporting

CMI reporting will be prepared in accordance with Section VIII.D of the Permit and AEIRG (ADEM, 2005) as follows:

1) CMI Report – Prepared following the baseline groundwater sampling, first round of injections, excavations, backfilling, cap installation, and implementation of LUCs around the localized cap area. This report will demonstrate that the cleanup goal for soil has been reached.

2) CMI Effectiveness Report – Prepared annually and presents the post-injection monitoring data and progress toward the CGs for groundwater. It also presents the completed cap inspection and LUC checklist ensuring the integrity of the cap.

3) Final Report of Corrective Measures – Prepared upon attainment of CGs for constituents in groundwater.

As indicated in the CQAP, the daily reports (including daily construction logs, etc.) will be provided to the Project Manager or designee during CMI activities. The requirements for preparation and submittal of daily project documentation are outlined in the CQAP (Appendix E).

4.16 Post-Construction Scheduled Activities

Post-construction scheduled activities include operation and maintenance of the cap, groundwater monitoring and data evaluation, inspections, and reporting.

4.16.1 Cap Operation and Maintenance

RSA will properly operate and maintain all facilities at RSA-204 to achieve compliance with the conditions of the Permit (ADEM, 2016). Proper operation and maintenance includes effective performance, adequate funding, adequate operator staffing and training, and adequate laboratory controls, including appropriate quality assurance procedures.

The cap will be monitored, maintained, and repaired, as necessary, to ensure its long-term effectiveness. Monitoring will consist of regular inspections of the cap and surrounding vegetation. Repairs will be made as required (Section 4.16.3).

4.16.2 Groundwater Monitoring and Data Evaluation

RSA will continue groundwater monitoring at RSA-204 as detailed in the Long-Term Groundwater Monitoring Plan for this site (Appendix K).

Groundwater monitoring will commence after the first round of reagent injections has been conducted. The schedule for the first year will consist of sampling approximately 30 days, 120- days, 210 days, and 300 days after the first injection round. Replacement wells installed following the completion of excavation activities will be added to the next scheduled sampling event following their installation and development. Samples will be collected from the ~~23~~ 26 groundwater monitoring wells in and around the treatment area as shown on Figure 4-3. The rationale for well selection, frequency of sampling, procedures and analytical parameters, and reporting is discussed in detail in Appendix K. The samples will be collected using low-flow purging and sampling techniques. The long-term groundwater monitoring samples will be analyzed for the same analytes and field parameters as the baseline sampling event.

The data collected from the baseline groundwater sampling and the quarterly first year sampling events following the first injection round will be used to plan the second round of injections. A- second round of DPT injections is planned approximately 1 year after the initial EVO solution injection round to address any remaining residual hot spots or perchlorate rebound areas within the treatment areas. The sampling frequency during this second year as well as the third year will be semiannual. Groundwater sampling in years 4 through 30 (anticipated to be the end of the corrective measures) will be conducted annually.

4.16.2.1 Data Evaluation and Interpretation

The primary objective of the groundwater monitoring program for RSA-204 is to determine whether the corrective measures reduce COC concentrations in groundwater beneath the site to levels determined to be acceptable to human health (i.e., cleanup goals). This will be determined based on the results of a statistical test or other methods. Statistical analysis will follow ADEM Administrative Code 335-14-5-.06(8)(h) and EPA guidance for groundwater monitoring at RCRA facilities (EPA, 1989; 1992; and 2009).

As allowed under these regulations, data from eight groundwater sampling rounds (years- 1- through 3) will be used to calculate nonparametric 95 percent upper tolerance limits or 95 percent upper prediction limits for the site COCs. These values will be calculated separately for the overburden and bedrock groundwater zones. Groundwater data collected during subsequent sampling events will be compared to these values. COCs that exceed these values may be subjected to additional analysis as allowed in ADEM Administrative Code 335-14-5-.06(8)(h). The additional analyses may include, for example, control charts, Wilcoxon rank sum tests, box plots, and/or temporal trend analysis, as appropriate. Specific evaluation techniques will depend upon the detection frequencies and statistical distributions of each COC. For example, one COC concentration at a given well may exceed the site-specific upper tolerance limit or upper prediction limit, and that could be either a random occurrence or indicative of an

increasing trend. Trend analysis will indicate if a trend is present and whether it has statistical significance.

Well data sets that pass statistical comparison tests (i.e., wells that do not demonstrate statistically significant increases over baseline concentrations) for all COCs will be sampled on an annual basis, in accordance with planned activities. Wells that fail statistical comparison tests for one or more COCs will be resampled. Following the collection of these additional data, statistical evaluation will again be performed and reported, along with recommendations for adjustment to sampling frequency, if appropriate.

Non-statistical methods may also be used to characterize RSA-204 groundwater conditions and may include the following:

- ***Hydrographs.*** Graphs of water levels versus time may be constructed to determine increases, decreases, seasonal, or man-made fluctuations in groundwater levels.
- ***Potentiometric Surface Maps.*** Depths to groundwater from multiple wells may be used to construct potentiometric surface contour maps and estimate flow directions.
- ***Concentration-versus-Time Plots.*** Graphs of COC concentrations versus time at each well will be constructed for each data set subjected to trend analysis. This supports the identification of trends and helps determine if concentration changes are related to changes in water level, changes in groundwater flow directions, or natural attenuation.
- ***Plume Maps.*** Maps depicting the physical distribution of chemical constituents will aid in determining movement of plumes.
- ***Geochemical Evaluation.*** For inorganic constituents that fail statistical comparison tests, geochemical evaluation may be performed to determine which concentrations may be naturally elevated and which concentrations may have a contaminant source.

4.16.2.2 Reporting

Based on the proposed sampling schedule, an annual CMI effectiveness report will be prepared after ~~each~~ four quarters of data collection for the first year of the LTM and then after ~~each~~ two semiannual data collection events for the following two years to demonstrate the effectiveness and success of the final corrective action program for RSA-204 groundwater. The effectiveness report will be compliant with provisions of the ADEM Administrative Code Rule 335-14-5-.06(10), which states that a compliance monitoring program must be implemented encompassing the extent of the contaminant plumes, and be maintained as long as necessary to achieve compliance with the CGs. The annual report will discuss the most recent sampling events and relate the findings as they pertain to treatment performance for the groundwater contaminants.

The groundwater flow rate and direction in the overburden/interface zone will be determined annually and the data and maps will be included in effectiveness report pursuant to ADEM AAC Rule 335-14-5-.06(10)(e). The RSA-204 compliance monitoring program will address provisions for determining whether there is statistically significant evidence of increased contamination for any chemical parameter or hazardous constituent pursuant to ADEM AAC Rule 335-14-5-.06(10)(d) and ADEM AAC Rule 335-14-5-.06(10)(f).

Recommendations for changes to the sampling frequency, wells sampled, and parameters for analysis, if appropriate, will be included in the reports. At a minimum, the groundwater monitoring report will include a discussion of sampling activities, tables, and maps to document contaminant concentrations in groundwater, and an evaluation of the groundwater contaminant data. Other recommendations may include installation of additional monitoring wells and resampling for verification of sampling results. Record keeping for data and reports are described in the installation-wide QAPP (Shaw, 2013b).

4.16.3 Inspections

General site inspections of the localized cap at Building 7689 shall be conducted semiannually to ensure that the integrity of the engineered cover is maintained and to ensure that land use remains appropriately restricted per the environmental ~~covenant~~restriction.

- ~~Site inspections~~Inspections will consist of a complete walkthrough and visual inspection of the cap area.
- The capped area will be covered with concrete and adjacent areas are the responsibility of the RSA operations and maintenance staff to mow and maintain.
- Repair of a disturbance or breach of the cap shall be initiated within 10 days of identifying the need for such repairs.
- Repairs to the warning signs shall be completed as needed and initiated within 10- days of identifying the need for such repairs. Prior to modifications in the frequency of inspection, the Army will submit a request to ADEM for review and approval.
- ~~The capped area will be covered with concrete. Adjacent areas to the cap will be mowed a minimum of twice a year.~~

The frequency of inspections can be scaled back to once per year, once conditions of the cap have stabilized over a minimum period of two years. The cap and LUC inspection form is included in Appendix K. Completed cap and LUC inspection forms will be included in the CMI effectiveness reports. Prior to modifications in the frequency of inspection the Army will submit a request to ADEM for review and approval.

APPENDIX B

REQUEST FOR PERMIT MODIFICATION

REQUEST FOR PERMIT MODIFICATION
FOR
RSA-204, OXIDIZER FACILITY, BUILDING 7691, OPERABLE UNIT 10
U.S. ARMY GARRISON – REDSTONE
MADISON COUNTY, ALABAMA
~~JULY~~SEPTEMBER 2016

1.0 Introduction

As specified in Section VI.E.3 of the U.S. Army Garrison – *Redstone Arsenal's Alabama Hazardous Wastes Management and Minimization Act Hazardous Waste Storage Facility, Thermal Treatment, Solid Waste Management Unit Corrective Action Permit, Modification No.* 8 (hereafter referred to as the Permit) (last modified on June 3, 2016) (Alabama Department of Environmental Management [ADEM], 2016), a request for permit modification is to be submitted along with a corrective measures implementation (CMI) work plan. The Army has been directed to include this request for permit modification in an appendix to the CMI work plan. Therefore, this request for modification to the Permit has been prepared for Solid Waste Management Unit (SWMU) RSA-204, Oxidizer Facility, Building 7691, Operable Unit (OU) 10, at Redstone Arsenal (RSA) in Madison County, Alabama. The Resource Conservation and Recovery Act (RCRA) facility investigation (RFI) report for RSA-204 was approved by ADEM on March 4, 2014 (Shaw, 2013a). Attachment 1 contains the ADEM concurrence letter for the RFI report. The Army has prepared the CMI work plan and is ready to implement corrective measures for soil and groundwater at RSA-204.

As part of the RFI report, the Army requested that ADEM move this site from Table VI.2 to Table VI.6 in the Permit and list it as requiring corrective measures for soil/surface media and groundwater as part of RSA-204. ADEM subsequently moved RSA-204 to Table VI.6 in Permit Modification No. 5 (ADEM, 2015).

As specified in Section VI.E.3 of the Permit, this modification will serve to incorporate the proposed remedy, including all procedures necessary to implement and monitor the final corrective measures for this site, into the Permit in accordance with Alabama Administrative Code R. 335-14-8-.04(2).

2.0 Facility and Site Description

RSA is located in the southwestern portion of Madison County, which is in the northern portion of Alabama. RSA occupies approximately 38,300 acres and is approximately 10 miles long from

APPENDIX D

SITE-SPECIFIC SAFETY AND HEALTH PLAN

Draft

Site-Specific Safety and Health Plan
Corrective Measures Implementation
RSA-204, Oxidizer Facility, Building 7691
Operable Unit 10
U.S. Army Garrison-Redstone
Madison County, Alabama
EPA ID No. AL7 210 020 742

Prepared for:

Mission & Installation Contracting Command
ATTN: MICC Center – FSH
2107 17th Street
Building 4197, Suite 15
Fort Sam Houston, Texas 78234-5015

Prepared by:

CB&I Federal Services LLC
2410 Cherahala Boulevard
Knoxville, Tennessee 37932

Contract No. W91ZLK-09-D-0006
CB&I Project No. 147104
Task Order 0008

~~July~~September 2016

The following Site-Specific Safety and Health Plan (SSHP) has been designed for the methods presently contemplated by CB&I (CB&I) for execution of the proposed work. Therefore, the SSHP may not be appropriate if the work is not performed by or using the methods presently contemplated by CB&I. In addition, as the work is performed, conditions different from those anticipated may be encountered and the SSHP may have to be modified. Therefore, CB&I only makes representations or warranties as to the adequacy of the SSHP for currently anticipated activities and conditions. This Site-Specific Safety and Health Plan Attachment must be used in

Redstone Project Emergency Contacts

Fire Department (ask for RSA Fire Department) 911
Fire Department (from cellular phone) .....(256) 876-2117
Ambulance (HEMSI) 911
Installation Emergency Operations Center (non-911 emergencies) .....(256) 313-1043
Military Police .....(256) 876-2222
Huntsville Hospital (Emergency Room) .....(256) 265-8144
Huntsville Hospital (Trauma Center) .....(256) 265-8137
Chemical Agent Emergencies (state that you are at Redstone) 911
UXO Emergencies (state that you are at Redstone) 911
UXO Nonemergencies/Reporting Only .....(256) 313-3297
Installation Operations Center (IOC) .....(256) 313-1043
Garrison Safety Office .....(256) 876-2944
Thomas Harrell, Safety Manager .....(256) 313-3297
DSN .....(256) 897-3297
Keith Coates, Safety & Occupational Health Specialist .....(256) 876-3383
Bobby Taylor, Safety & Occupational Health Specialist .....(256) 313-3294
Jonathan Niedergeses (MEC support) .....(256) 876-6027
Primary Site Emergency Contact (Barry Hodges, Site Manager, U.S. Army Garrison-Redstone) .....(256) 876-0887
Terry de la Paz, U.S. Army Garrison, Chief, Installation Restoration Branch .....(256) 955-6968
National Response Center .....(800) 424-8802
Poison Control Center .....(800) 222-1222
EPA Region 4 .....(404) 347-3931
Art Holcomb, CB&I Project Manager .....(256) 213-2188
(Cellular) .....(256) 783-8478
Brian Rhodes, CB&I QCSM (RSA Field Office) .....(256) 213-2202
(Mobile/Cellular) .....(256) 714-4200
(Field Office Fax) .....(256) 213-2190
Doug Russell, CB&I H&S Manager .....(865) ~~560-7918~~692-3584
(Mobile/Cellular) .....(865) 414-9545
James Vigerust, CB&I H&S Field Manager .....(256) 213-2196
(Mobile/Cellular) .....(505) 410-4995
CB&I Hot Line (CB&I incident reporting) .....(866) 299-3445
Dr. William Nassetta, CORE Occupational Physician .....(225) 756-2673
Occupational Health Center, Crestwood Family Practice .....(256) 721-9916
Crestwood Workers Care Madison .....(256) 830-8930

APPENDIX E

CONSTRUCTION QUALITY ASSURANCE PLAN

Construction Quality Assurance Plan
RSA-204, Oxidizer Facility, Building 7691
Operable Unit 10
U.S. Army Garrison-Redstone
Madison County, Alabama

Prepared for:

Mission & Installation Contracting Command
ATTN: MICC Center – FSH
2107 17th Street
Building 4197, Suite 15
Fort Sam Houston, Texas 78234-5015

Prepared by:

CB&I Federal Services LLC
2410 Cherahala Boulevard
Knoxville, Tennessee 37932

Contract Number W91ZLK-09-D-0006
CB&I Project No. 147104
Task Order 0008

~~July~~September 2016

ATTACHMENT 1

FIELD INSPECTION CHECKLIST

CB&I Federal Services LLC	**Contract No:** W91ZLK-05-D-0006 **EPA ID No.** AL7 210 020 742	**Controlling Document:** **Corrective Measures Implementation Work Plan**
Location: Redstone Arsenal, Madison County, Alabama		
Inspection Type: Field Inspection Checklist **Subject:** RSA-204 CMI Work Plan	**Inspection Date:**	

Descriptor / Requirements	Comments	Results
4.0 Corrective Measures Implementation		
This section provides an overview of the field activities planned to complete corrective measures at RSA-204. Work presented in this section will be completed in accordance with the procedures described in the CMI Work Plan and other approved documentation as appropriate. RSA-204 CMI Work Plan Chapter 4.0		
4.1 General Scope		
The general scope of work (SOW) includes the following: • Mobilization/demobilization • Utility clearance and marking • Vegetation clearing • Well installation (1 well) • Baseline groundwater sampling (~~23~~26 wells) • Well closure (4 wells) • Removal of blast berms (north side of Building 7689 and along western side of Building 7688) • Surveying and marking the newly installed well, proposed injection locations, excavation areas, and the localized cap (Building 7689) • ISEB treatment via well points and DPT injection • Construction of surface water and erosion controls • Excavation of contaminated soil, sump near Building 7689, and septic tank • Confirmation sampling and analysis of the excavated areas • Waste characterization sampling • Transport and disposal of excavated soils as special waste (nonhazardous) at a Subtitle D landfill • Backfilling of excavation areas using clean borrow soil • Construction of impermeable cap adjacent to Building 7689 • Site restoration, including application of topsoil, revegetation with approved grass mixtures, replacement of asphalt driveways and roads (as necessary), and replacement of berms and monitoring wells • Monitored natural attenuation and long-term monitoring (groundwater sampling and reporting). RSA-204 CMI Work Plan Chapter 4.0		

CB&I Federal Services LLC	**Contract No:** W91ZLK-05-D-0006 **EPA ID No.** AL7 210 020 742	**Controlling Document:** **Corrective Measures Implementation Work Plan**
Location: Redstone Arsenal, Madison County, Alabama		
Inspection Type: Field Inspection Checklist **Subject:** RSA-204 CMI Work Plan	**Inspection Date:**	

Descriptor / Requirements	Comments	Results
4.3 Baseline Groundwater Sampling and Well Closure and Replacement		
Prior to substrate injection, baseline groundwater sampling will be conducted at ~~23~~26 overburden, interface, and shallow bedrock monitoring wells adjacent to the treatment areas. Analyses will be conducted for VOCs, perchlorate, explosives, dissolved gases, select total and dissolved metals, anions, iron, total organic carbon, alkalinity, and general water quality parameters (pH, temperature, conductivity, turbidity, ORP, and DO) (Appendix F). Combustible gases and depth to groundwater will also be measured in the field during sampling. RSA-204 CMI Work Plan Chapter 4.0		
Groundwater sampling will be performed using low flow purging and sampling techniques. RSA-204 CMI Work Plan Chapter 4.0		
Monitoring wells located within the proposed excavation footprint will be closed prior to the excavation activities and replaced as part of site restoration activities. The following four monitoring wells are expected to be affected by excavation activities: 204-RS2669, 204-RS2684, 204-RS2671, and K142-RS1224. The total depth of these wells ranges from 25 to 65 feet below ground surface (bgs). Following completion of excavation activities, replacement wells (204-RS2791 through 204-RS2794) of similar depth and construction will be installed for each well disturbed by excavation activities (see also Section 4.11.4 of CMI work plan). RSA-204 CMI Work Plan Chapter 4.0		
Well closure will be performed in accordance with Standard Operating Project Procedure (SOPP) 21.0 (Shaw, 2013c) and in accordance with the Alabama Environmental Investigation and Remediation Guidance (ADEM, 2005). An informal well closure plan will be submitted to ADEM for approval prior to well closure activities. The wells will be closed in place by filling the screened interval with clean silica sand 2 feet above the top of the screen. RSA-204 CMI Work Plan Chapter 4.0		
After allowing time for the silica sand to settle, a 2-foot-thick bentonite seal will be added above the silica sand. Bentonite pellets are recommended and shall be poured slowly to avoid bridging. The bentonite seal will be allowed to hydrate per the manufacturer's instructions. RSA-204 CMI Work Plan Chapter 4.0		

APPENDIX F

DATA COLLECTION QUALITY ASSURANCE PLAN

Worksheet No. 1 Title Page

Data Collection Quality Assurance Plan for RSA-204, Oxidizer Facility, Building 7691 Operable Unit 10 U.S. Army Garrison-Redstone Madison County, Alabama EPA ID No. AL7 210 020 742 ~~July~~September 2016

Prepared for:
Mission & Installation Contracting Command
ATTN: MICC Center – FSH
2107 17th Street
Building 4197, Suite 15
Fort Sam Houston, Texas 78234-5015

Prepared by:
CB&I Federal Services LLC
2410 Cherahala Boulevard
Knoxville, Tennessee 37932

Contract Number W91ZLK-09-D-0006
CB&I Project No. 147104
Task Order 0008

Table of Contents

Page

F1.0 Introduction 1
F1.1 Purpose 1
F1.2 Document Organization 1
F2.0 References 3
F3.0 Uniform Federal Policy Quality Assurance Project Plan Worksheets 4

Attachment F-1 ~~–~~ General Soil ~~Sampling – EPA Region 4 Operating Procedure (SESDPROC-300-R3)~~

Sample Collection, Alabama Department of Environmental Management, SOP #2150, Rev 5.0, Version Date 8/12/16

F1.0 Introduction

This data collection quality assurance plan (DCQAP) has been developed as a standard document in support of corrective measures implementation (CMI) at RSA-204. This document provides procedures, guidelines, and practices for the control of equipment, materials, and services anticipated to be used during the field sampling phases of the soil and groundwater sampling at the site.

F1.1 Purpose

The purpose of this DCQAP is to define the methodology and practices that control the quality of work performed during implementation of the corrective measures at RSA-204. The objective of this DCQAP is to ensure that the data collected are of sufficient quality to verify that corrective measures have been accomplished. This DCQAP is intended for use in conjunction with the Redstone Arsenal installation-wide work plan (IT Corporation, 2002) and the installation-wide (IW) quality assurance program plan (QAPP) for the Program Management Contract (Shaw Environmental, Inc. [Shaw], 2013). The work guidance documents that will govern the quality practices for this task will include the following:

- The CMI work plan and the associated appendices
- The IW QAPP (Shaw, 2013)
- The standard operating project procedures (IW QAPP Volume II) (Shaw, 2013).

Data collection will be in accordance with Alabama Department of Environmental Management (ADEM) guidance (ADEM, 2005; 2010a,b).

F1.2 Document Organization

This document has been organized to present the DCQAP in the following format:

- Introduction – Chapter F1.0
- References – Chapter F2.0
- Uniform Federal Policy (UFP) quality assurance project plan worksheets (Chapter F3.0).

Chapter F1.0 provides a brief overview of this DCQAP and introduces the UFP QAPP worksheets. References are included in Chapter F2.0. The worksheets provided in Chapter F3.0 present a description of the proposed work in compliance with the UFP quality assurance project

plan format. Worksheet No. 2, CMI Work Plan Identifying Information, provides a “cross walk” to the IW QAPP, where needed, and summarizes the site-specific worksheets that are included in this plan.

F2.0 References

Alabama Department of Environmental Management (ADEM), 2010a, Memorandum from James L. Bryant, Environmental Services Branch, ***In-situ Sampling for the Purposes of Waste Characterization/Disposal of Soil***, August.

Alabama Department of Environmental Management (ADEM), 2010b, ***General Soil Sample Collection***, July.

Alabama Department of Environmental Management (ADEM), 2005, ***Alabama Environmental Investigation and Remediation Guidance***, September.

IT Corporation, 2002, ***Draft-Final, Revision 2, Installation-Wide Work Plan, Redstone Arsenal, Madison County, Alabama***, June.

Shaw Environmental, Inc. (Shaw), 2013, ***Revision 2, Installation-Wide Quality Assurance Program Plan for the Program Management Contract, Volume I and Volume II, U.S. Army Garrison-Redstone, Madison County, Alabama***, May.

U.S. Department of Defense (DoD), 2013, ***Quality Systems Manual for Environmental Laboratories***, Version 5.0, July.

U.S. Environmental Protection Agency (EPA), 2010, ***Contract Laboratory Program National Functional Guidelines for Superfund Inorganic Data Review***, EPA/540/R-94/013, January.

U.S. Environmental Protection Agency (EPA), 2008, ***Contract Laboratory Program National Functional Guidelines for Superfund Organic Methods Data Review***, EPA/540/R-08-01, June.

U.S. Environmental Protection Agency (EPA), 1994, ***Region 3 Modifications to the Laboratory Data Validation Functional Guidelines for Evaluating Organic Analyses***, September.

U.S. Environmental Protection Agency (EPA), 1993, ***Region 3 Modifications to the Laboratory Data Validation Functional Guidelines for Evaluating Inorganic Analyses***, April.

F3.0 Uniform Federal Policy Quality Assurance Project Plan Worksheets

The quality assurance requirements needed to support the sampling and data collection activities in this work plan were adopted under the UFP for quality assurance project plans and implemented in a graded approach.

The crosswalk presented in Worksheet No. 2 provides direction to the related documents or information pertaining to the quality assurance project plan requirements. Where site-specific information is required to meet the elements of the UFP QAPP, the supplemental worksheets will be completed in their entirety and included with the crosswalk in this appendix. This DCQAP includes the following supplemental worksheets:

- Worksheet No. 2 – CMI Work Plan Identifying Information
- Worksheet No. 3 – Distribution List
- Worksheet No. 4 – Project Personnel Sign-Off Sheet
- Worksheet No. 14 – Summary of Project Tasks
- Worksheet No. 18 – Sampling Locations and Methods/SOP Requirements
- Worksheet No. 20 – Field Quality Control Sample Summary
- Worksheet No. 26 – Sample Handling System.

The purpose of this DCQAP is to ensure that the data collected are of sufficient quality to achieve the cleanup goals for soil and groundwater at RSA-204. The objective of this work plan is to present the sampling rationale and provide the details required to complete the field efforts. This work plan is intended for use in conjunction with the IW work plan and the IW QAPP for the Program Management Contract.

Worksheet No. 2 CMI Work Plan Identifying Information

Site Name/Project Name	Redstone Arsenal, Madison County, Alabama/RSA Program Management Contract (PMC)
Site Location	Groundwater Unit RSA-146
Site Number/Code	RSA-204
Operable Unit (OU)	OU-10
Contractor Name	CB&I Federal Services LLC (CB&I)
Contractor Number	W91ZLK-09-D-0018
Contract Title	RSA PMC
Work Assignment Number No. (Project No.)	CB&I Project No. 147104
Guidance Documents (Manuals, Guidelines, Plans, etc. Used to Prepare the DCQAP)	Intergovernmental Data Quality Task Force, 2005, *Uniform Federal Policy for Quality Assurance Project Plans* U.S. Department of Defense (DoD), 2013, *Quality Systems Manual* for Environmental Laboratories, Version 5.0 U.S. Environmental Protection Agency (EPA), 2013, *National Functional Guidelines for Superfund Inorganic Data Review*, EPA 540-R-10/011 U.S. Environmental Protection Agency (EPA), 2008, *EPA National Functional Guidelines for Superfund Organic Methods Data Review*, EPA 540-R-08-01
Regulatory Program	Resource Conservation and Recovery Act, ADEM
Approval Entities	U.S. Army Garrison-Redstone, ADEM
Work Plan	☒ Corrective Measures Implementation ☐ Generic Field Sampling Plan
Dates of Scoping Sessions	Biweekly Group 4 Status Calls
Dates and Titles of SFSP Documents Written for Previous Site Work (if applicable)	References are found in Chapter 6.0 of the Corrective Measures Implementation (CMI) Work Plan.
Organizational Partners (stakeholders) and Their Connection with Lead Organization	U.S. Army Garrison-Redstone – Overseeing CB&I's performance under this PMC point of contact with regulators ADEM – State regulator overseeing RSA environmental and remediation activities
Data Users	CB&I Project/Task Leads, engineering, support personnel, U.S. Army Garrison-Redstone, and ADEM

Worksheet No. 2 CMI Work Plan Identifying Information

Required QAPP Element(s) and Corresponding QAPP Section(s)	Required Information	Crosswalk to Related Worksheet / Documents
Project Management and Objectives		
2.1 Title and Approval Page	Title and Approval Page	Worksheet No.1 − Title Page
2.2 Document Format and Table of Contents 2.2.1 Document Control Format 2.2.2 Document Control Numbering System 2.2.3 Table of Contents 2.2.4 QAPP Identifying Information	Table of Contents QAPP Identifying Information	The Table of Contents is provided following the Title and Approval page. Worksheet No.2 – CMI Work Plan Identifying Information
2.3 Distribution List and Project Personnel Sign-Off Sheet 2.3.1 Distribution List 2.3.2 Project Personnel Sign-Off Sheet	Distribution List Project Personnel Sign-Off Sheet	Worksheet No.3 − Distribution List Worksheet No.4 – Project Personnel Sign-Off Sheet
2.4 Project Organization 2.4.1 Project Organization Chart 2.4.2 Communication Pathways 2.4.3 Personnel Responsibilities and Qualifications 2.4.4 Special Training Requirements and Certification	Project Organization Chart Communication Pathways Personnel Responsibilities and Qualifications Table Special Personnel Training Requirements Table	Worksheet No.5 − Project Organizational Chart is provided in the IW QAPP, Volume I (Shaw, 2013). Worksheet No.6 – Worksheet No. 6 is in the IW QAPP (Shaw, 2013) Worksheet No.7 – Personnel Responsibilities and Qualifications Table (Appendix E, Section 2.0) Worksheet No.8 − Special Personnel Training Requirements Table There are no special training requirements for this task.
2.5 Project Planning/Problem Definition 2.5.1 Project Planning (Scoping) 2.5.2 Problem Definition, Site History, and Background	Project Planning Session Documentation (including “Data Needs” tables) Project Scoping Session Participants Sheet Problem Definition, Site History, and Background Site Maps (historical and present)	Worksheet No.9 – Project Scoping Sessions Participants Sheet – Informal scoping sessions were conducted during the biweekly Group 4 status calls. Worksheet No.10 − Problem Definition See Chapters 2.0 and 3.0 of the CMI Work Plan

Worksheet No. 2 CMI Work Plan Identifying Information

Required QAPP Element(s) and Corresponding QAPP Section(s)	Required Information	Crosswalk to Related Worksheet / Documents
2.6 Project Quality Objectives and Measurement Performance Criteria 2.6.1 Development of Project Quality Objectives Using the Systematic Planning Process 2.6.2 Measurement Performance Criteria	Site-Specific Project Quality Objectives Measurement Performance Criteria Table	Worksheet No.11 − Project Quality Objectives/Systematic Planning Process Statements - Sample and data collection for this activity are not of investigative nature but are for confirmation analysis and waste characterization. The planning and objectives have been defined in Chapter 3.0 of the CMI Work Plan. Worksheet No.12 − Measurement Performance Criteria Tables are presented in the IW QAPP, Volume I, Attachment 2a (Shaw, 2013). Site-specific information listing the analyses to be performed is presented in Worksheet No. 18, Sampling Locations and Methods/SOP Requirements, and Worksheet No.20, Field Quality Control Sample Summary.
2.7 Secondary Data Evaluation	Sources of Secondary Data and Information Secondary Data Criteria and Limitations Table	Worksheet No.13 − No secondary data will be generated by this CMI Work Plan, nor will any be generated in the future.
2.8 Project Overview and Schedule 2.8.1 Project Overview 2.8.2 Project Schedule	Summary of Project Tasks Reference Limits and Evaluation Table Project Schedule/Timeline Table	Worksheet No.14 − Summary of Project Tasks Worksheet No.15 − Reference Limits and Evaluation Table is presented in the IW QAPP, Volume I (Shaw, 2013), Attachment 2a. Site-specific information listing the analyses to be performed is presented in Worksheet No.18, Sampling Locations and Methods/SOP Requirements, and Worksheet No. 20, Field Quality Control Sample Summary. Worksheet No.16 − Project Schedule/Timeline Table The construction schedules are found in Appendix C and are based on the regulatory requirements.

Worksheet No. 2 CMI Work Plan Identifying Information

Required QAPP Element(s) and Corresponding QAPP Section(s)	Required Information	Crosswalk to Related Worksheet / Documents
Measurement/Data Acquisition		
3.1 Sampling Tasks 3.1.1 Sampling Process Design and Rationale 3.1.2 Sampling Procedures and Requirements 3.1.2.1 Sampling Collection Procedures 3.1.2.2 Sample Containers, Volume, and Preservation 3.1.2.3 Equipment/Sample Containers Cleaning and Decontamination Procedures 3.1.2.4 Field Equipment Calibration, Maintenance, Testing, and Inspection Procedures 3.1.2.5 Supply Inspection and Acceptance Procedures 3.1.2.6 Field Documentation Procedures	Sampling Design and Rationale Sample Location Map Sampling Locations and Methods / Standard Operating Procedures (SOP) Requirements Table Analytical Methods/SOP Requirements Table Field QC Sample Summary Table Sampling SOPPs Project Sampling SOPP References Table Field Equipment Calibration, Maintenance, Testing, and Inspection Table	Worksheet No.17 − Sampling Design and Rationale for the soil and groundwater confirmation samples are presented in Sections 4.7 and 4.14, respectively, of the CMI Work Plan. Worksheet No.18 − Sampling Locations and Methods/SOP Requirements Worksheet No.19 − Analytical SOP Requirements Table (Sample Containers Preservation and Holding Times) are presented in the IW QAPP, Volume I, Attachment 2a (Shaw, 2013). Site-specific information listing the analyses to be performed is presented in Worksheet No.18, Sampling Locations and Methods/SOP Requirements, and Worksheet No. 20, Field Quality Control Sample Summary. Worksheet No. 20 – Field Quality Control Sample Summary Worksheet No. 21 − Project Sampling SOPP Reference Table. There are no project-specific SOPPs. The complete list of SOPPs is provided in Worksheet No. 21, Project Sampling SOPP References, in the IW QAPP, Volume I (Shaw, 2013). Additionally, copies of the field sampling SOPPs are provided in the IW QAPP, Volume II (Shaw, 2013). Worksheet No. 22 − Field Equipment Calibration Maintenance, Testing, and Inspection Table This Table is presented in Worksheet No. 22 of the IW QAPP, Volume I (Shaw, 2013).

Worksheet No. 2 CMI Work Plan Identifying Information

Required QAPP Element(s) and Corresponding QAPP Section(s)	Required Information	Crosswalk to Related Worksheet / Documents
3.2 Analytical Tasks 3.2.1 Analytical SOPs 3.2.2 Analytical Instrument Calibration Procedures 3.2.3 Analytical Instrument and Equipment Maintenance, Testing, and Inspection Procedures 3.2.4 Analytical Supply Inspection and Acceptance Procedures	Analytical SOPs Analytical SOP References Table Analytical Instrument Calibration Table Analytical Instrument and Equipment Maintenance, Testing, and Inspection Table	Worksheet No. 23 − Analytical Reference Table - Laboratory is provided in the IW QAPP, Volume I, Attachment 2a (Shaw, 2013). Site-specific information listing the analyses to be performed is presented in Worksheet No. 18, Sampling Locations and Methods/SOP Requirements, and Worksheet No. 20, Field Quality Control Sample Summary. Worksheet No. 24 − Analytical Instrument Calibration Table - Laboratory is provided in the IW QAPP, Volume I, Attachment 2a (Shaw, 2013). Site-specific information listing the analyses to be performed is presented in Worksheet No. 18, Sampling Locations and Methods/SOP Requirements, and Worksheet No. 20, Field Quality Control Sample Summary. Worksheet No. 25 − Analytical Instrument and Equipment Maintenance, Testing, and Inspection are provided in the IW QAPP, Volume I, Attachment 2a (Shaw, 2013). Site-specific information listing the analyses to be performed is presented in Worksheet No. 18, Sampling Locations and Methods/SOP Requirements, and Worksheet No. 20, Field Quality Control Sample Summary.
3.3 Sample Collection Documentation, Handling, Tracking, and Custody Procedures 3.3.1 Sample Collection Documentation 3.3.2 Sample Handling and Tracking System 3.3.3 Sample Custody	Sample Collection Documentation Handling, Tracking, and Custody SOPs Sample Container Identification Example Chain-of-Custody (COC) Form and Seal	Worksheet No. 26 − Sample Handling System Worksheet No. 27 − Sample Custody Requirements are provided in the IW QAPP, Volume I (Shaw, 2013). A sample Chain-of-Custody Form is provided in the IW QAPP, Volume I (Shaw, 2013).

Worksheet No. 2 CMI Work Plan Identifying Information

Required QAPP Element(s) and Corresponding QAPP Section(s)	Required Information	Crosswalk to Related Worksheet / Documents
3.4 Quality Control (QC) Samples 3.4.1 Sampling Quality Control Samples 3.4.2 Analytical Quality Control Samples	QC Samples Table Screening/Confirmatory Analysis Decision Tree	Worksheet No. 28 – Laboratory QC Sample Tables are presented in their entirety in the IW QAPP, Volume I Attachment 2a (Shaw, 2013). Site-specific information listing the analyses to be performed is presented in Worksheet No. 18, Sampling Locations and Methods/SOP Requirements, and Worksheet No. 20, Field Quality Control Sample Summary.
3.5 Data Management Tasks 3.5.1 Project Documentation and Records 3.5.2 Data Package Deliverables 3.5.3 Data Reporting Formats 3.5.4 Data Handling and Management 3.5.5 Data Tracking and Control	Project Documents and Records Table Analytical Services Table Data Management SOPs	Worksheet No. 29 − Project Documents and Records Table (SOPP RSA-11.0, "Field-Generated Records Management" provides additional guidance and is included in the IW QAPP, Volume II (Shaw, 2013). Worksheet No. 30 − Analytical Services Table is presented in their entirety in the IW QAPP, Volume I Attachment 2a (Shaw, 2013). Site-specific information listing the analyses to be performed is presented in Worksheet No. 18, Sampling Locations and Methods/SOP Requirements, and Worksheet No. 20, Field Quality Control Sample Summary.
Assessment/Oversight		
4.1 Assessments and Response Actions 4.1.1 Planned Assessments 4.1.2 Assessment Findings and Corrective Action Responses	Assessments and Response Actions Planned Project Assessments Table Audit Checklists Assessment Findings and Corrective Action Responses Table	Worksheet No. 31 − Planned Project Assessments Table, Constructions specific assessment and inspection are provided in Appendix E. Worksheet No. 32 − Assessment Findings and Corrective Action Responses Shaw SOPs for quality assessments and reporting are listed in Worksheet No. 21, and a copy is provided in the IW QAPP, Volume II (Shaw, 2013). The laboratory audit checklists and assessments are provided in the IW QAPP, Volume I (Shaw, 2013).
4.2 QA Management Reports	QA Management Reports Table	Worksheet No. 33 − QA Management Reports Table SOPs for quality assessment and reporting are provided in the IW QAPP, Volume II (Shaw, 2013).

Worksheet No. 2 CMI Work Plan Identifying Information

Required QAPP Element(s) and Corresponding QAPP Section(s)	Required Information	Crosswalk to Related Worksheet / Documents
4.3 Final Project Report	All QA Management Reports attached Additional data quality concerns and resolution documentation	Worksheet No. 33 − QA Management Reports Table SOPs for quality assessment and reporting are provided in the IW QAPP, Volume II (Shaw, 2013).
Data Review		
5.1 Overview		
5.2 Data Review Steps 5.2.1 Step I: Verification 5.2.2 Step II: Validation 5.2.2.1 Step IIa Validation Activities 5.2.2.2 Step IIb Validation Activities 5.2.3 Step III: Usability Assessment 5.2.3.1 Data Limitations and Actions from Usability Assessment 5.2.3.2 Activities	Verification (Step I) Process Table Validation (Steps IIa and IIb) Process Table Validation (Steps IIa and IIb) Summary Table Usability Assessment	Worksheet No. 34 − Verification (Step I) Process Table is presented in the IW QAPP, Volume I (Shaw, 2013). Worksheet No. 35 − Validation (Steps IIa and IIb) Process Table is presented in the IW QAPP, Volume I (Shaw, 2013). Worksheet No. 36 − Validation (Steps IIa and IIb) Summary Table is presented in the IW QAPP, Volume I, Attachment 2a (Shaw, 2013). Worksheet No. 37 − Usability Assessment is presented in the IW QAPP, Volume I (Shaw, 2013).
5.3 Streamlining Data Review 5.3.1 Data Review Steps To Be Streamlined 5.3.2 Criteria for Streamlining Data Review 5.3.3 Amounts and Types of Data Appropriate for Streamlining	Automated Data Review A1 and A2 data files for each sample delivery group Verification sampling or as needed Applicable to 90 percent data that are not manually validated	Automated Data Review (Laboratory Data Consultants) is used by the laboratory and Shaw to automatically review electronic data against the QAPP requirements. In addition, Empirical Laboratories uses the Element Data System (Promium, LLC), which is set up with all project requirements and allows real-time data evaluation for compliance with calibration, spike, surrogate, and blank requirements.

Shaw Environmental, Inc. (Shaw), 2013, ***Revision 2, Installation-Wide Quality Assurance Program Plan for the Program Management Contract, Volume I and Volume II, U.S. Army Garrison-Redstone, Madison County, Alabama***, May.

Worksheet No. 3 Distribution List

SFSP Recipients	Title	Organization	Telephone Number	Fax Number	E-mail Address
Derek Pommerenck	Contracting Officer Representative (COR)	U.S. Army Garrison - Redstone	256-842-5987	256-876-0887	Derek.a.pommerenck.civ@mail.mil
Terry de la Paz	Chief Installation Restoration Branch	U.S. Army Garrison - Redstone	256-955-6968	256-876-0887	Terry.m.delapaz.civ.@mail.mil
Barry Hodges	Army Site Task Manager	U.S. Army Garrison - Redstone	256-876-6492	256-876-0887	Barry.a.hodges.civ@mail.mil
Kel Morrissette	ADEM Lead Remedial Project Manager	ADEM	334-394-4335	334-279-3050	KMorrissette@adem.state.al.us
Art Holcomb	CB&I Task Order 0008 PM	CB&I	256-213-2188	256-213-2190	Art.holcomb@cbifederalservices.com
Emily Davis	CB&I Senior Scientist	CB&I	717-737-1049	717-763-0553	Emily.davis@cbifederalservices.com
David W. Marcum	CB&I Project QA/QC Manager	CB&I	256-213-2193	256-213-2190	Dave.marcum@cbifederalservices.com
Carleton Edmunds	CB&I Regulatory Specialist	CB&I	865-560-7812	865-560-7956	Carleton.edmunds@cbifederalservices.com
Brian Rhodes	CB&I Quality Control Site Manager (QCSM)	CB&I	256-213-2202	256-213-2190	Brian.rhodes@cbifederalservices.com
Mark Shoemaker	CB&I Group 4 Cost Account Manager	CB&I	865-560-7927	865-560-7956	Mark.shoemaker@cbifederalservices.com
Gail Cooley	CB&I Group 4 Technical Lead	CB&I	865-560-7803	865-560-7956	Gail.cooley@cbifederalservices.com
Vicki Graves	CB&I Project Chemist	CB&I	865-560-7818	865-560-7956	Vicki.graves@cbifederalservices.com
Scott Wilson	CB&I Project Engineer	CB&I	256-213-2022	256-213-2190	Scott.wilson@cbifederalservices.com

Notes:
Copies of this data collection quality assurance plan will be distributed to the individuals above as part of the corrective measures implementation plan.

One controlled hard copy of the installation-wide work plan will be maintained in the field office as a reference for field workers. The field team members are required to be familiar with their applicable contents through required reading and the sign-off acknowledgement sheet. The CB&I quality control site manager will be the owner of the field copy of the installation-wide work plan and will be responsible to ensure that it is current and that all field sampling personnel have read the work controlling documents and have signed the acknowledgement form. A copy of the installation-wide guidance document will be maintained as a reference document in the possession of the field sampling team during the sampling event.

Worksheet No. 4 Project Personnel Sign-Off Sheet

Project Personnel	Title	Telephone Number	Signature	Date SFSP Read
Art Holcomb	CB&I Task Order 0008 PM	256-213-2188		
Vicki Graves	CB&I Project Chemist	865-560-7818		
Emily Davis	CB&I Sr. Scientist	717-737-1049		
David W. Marcum	CB&I Project QA/QC Manager	256-213-2193		
Brian Rhodes	CB&I QCSM	256-213-2202		
Mark Shoemaker	CB&I Group 4 Cost Account Manager	865-560-7927		
Gail Cooley	CB&I Group 4 Technical Lead	865-560-7803		
Scott Wilson	Project Engineer	256-213-2022		
Field Personnel	CB&I Field Personnel	256-213-2200		

The individuals who sign above are certifying they have read the applicable sections of the RSA installation-wide quality assurance program plan and the data collection quality assurance plan. Upon completion, please forward the original signed form, with all columns completed, to CB&I Federal Services LLC, c/o David W. Marcum, 7471 Maple Road, Huntsville, AL 35898 or forward an electronic version via email to dave.marcum@cbifederalservices.com for the project files.

Worksheet No. 14 Summary of Project Tasks

The data collection activities conducted at RSA-204 will be completed in accordance with the standard operating project procedures (SOPP), the corrective measures implementation (CMI) work plan, and the installation-wide (IW) quality assurance program plan (QAPP) for the Program Management Contract (Shaw Environmental, Inc. [Shaw], 2013). Data collection for this CMI will be conducted for the following activities:

- Baseline groundwater sampling
- Soil confirmation sampling following the soil excavation
- Borrow source samples as needed
- Investigation-derived waste (IDW)/remediation-derived waste (RDW) characterization
- Long-term groundwater sampling (Appendix K)

Quality assurance (QA)/quality control (QC) samples will be collected as presented in Worksheet No. 20, *Field Quality Control Sample Summary.*

The following sections present a brief description of each data collection task and present the work controlling documents that provide guidance to proper data collection implementation. All data collection activities will be conducted in a manner that ensures the quality of the data is sufficient to meet the objectives identified in the CMI work plan.

14.1 Baseline Groundwater Sampling

Baseline groundwater sampling is proposed from ~~23~~26 monitoring wells at RSA-204 to define the pretreatment water quality conditions across the treatment areas. This task will be completed prior to soil excavation and groundwater treatment activities. All groundwater sample designations and analytical parameters are listed in Worksheets No. 18 and No. 20. Prior to collection of groundwater samples from the designated wells, combustible gases will be monitored and static water levels will be measured at each well in accordance with SOPP No. 16, *Groundwater Level Measurements* (Shaw, 2013). Groundwater sampling will be performed using a submersible pump for purging and low-flow sampling techniques in accordance with SOPP No. 7, *Groundwater Sampling* (Shaw, 2013).

14.2 Soil Confirmation Samples

Following completion of the soil excavations, confirmation soil samples will be collected around the perimeter sidewalls within the RSA-204 excavation areas to ensure that the soil contaminant concentrations remaining at the site do not exceed the specified cleanup goal (CG) for perchlorate. The sampling activities will include subsurface soil sampling along the perimeter sidewalls (Section 4.7 of the CMI work plan). No floor samples will be collected, as the base of the excavations will be coincident with the average site depth to groundwater and the groundwater is contaminated beneath the site. The confirmation samples will be collected at depths and for analytical samples specified in Worksheet No. 18. The subsurface soil sampling will be conducted

Worksheet No. 14 Summary of Project Tasks

in accordance with SOPP No. 6.0, *Subsurface Soil Sampling,* and collection of confirmation soil samples using the excavator bucket will follow ~~U.S.~~Alabama Department of Environmental ~~Protection Agency (EPA) Region 4 Operating Procedure SESDPROC-300.R3~~Management, SOP # 2150, General Soil Sample Collection (Attachment F-1~~).~~), Rev 5.0, August 12, 2016. The subsurface soil samples will be field screened using an organic vapor analyzer (OVA) or photoionization detector (PID) for health and safety purposes in accordance with SOPP No. 2.0, *Collection and Field Screening of Soil Samples*. The data collection and analytical requirements are presented in Section 4.7 of the CMI work plan and Worksheets No. 18 and No. 20 of this data collection quality assurance plan (DCQAP), respectively.

Contaminated soils that are stockpiled during the excavation at RSA-204 will be divided into individual 200-cubic yard volumes and sampled in accordance with Section 4.9 of the CMI work plan. Worksheets No. 18 and No. 20 in this DCQAP specify the required sampling and analytical suite.

14.3 Borrow Source Samples

Clean soil for the fill material will be laboratory tested prior to placement. If sampling of the on-site borrow source material has not been conducted, sampling will be conducted to confirm that it is acceptable for use at the site. Samples will be tested for chemical contamination using the following EPA methods:

- EPA Method 3050B/6010C/7471A for metals
- EPA Method SW-846 7471B for mercury
- EPA Method 3540C/8270D for semivolatile organic compounds
- EPA Method 8260B for volatile organic compounds
- EPA Method 8081B for pesticides
- EPA Method 3540C/8082A for polychlorinated biphenyls.

Borrow samples will be collected in accordance with SOPP No. 5.0, *Surface Soil Sampling* (Shaw, 2013) and as detailed in the CMI work plan. The sample collection and analytical requirements are presented in Section 4.11.2 of the CMI work plan and Worksheets No. 18 and No. 20 of this DCQAP, respectively.

Worksheet No. 14 Summary of Project Tasks

14.4 IDW/RDW Samples

Waste to be managed as RDW will include the contaminated soil stockpiled from the excavation at each site. Soil confirmation sampling and groundwater baseline sampling will generate IDW. The data collection for the IDW/RDW management and analytical requirements are presented in Section 4.8 of the CMI work plan and Worksheets No. 18 and No. 20 of this DCQAP, respectively.

14.5 Excavation Areas

A contingency is planned in the event that groundwater infiltration or storm water inhibits excavation activities at the RSA-204 site, in which case the water will be removed from the excavation areas by pumping. Storm water controls will be implemented to direct potential run-off away from the site prior to reaching the limits of construction. The water will be passed through silt fence barricades or equivalent. Any water that needs to be removed from the excavation will be pumped into a tank prior to transport and disposal as a remediation-derived waste.

14.6 Well Closure

Four monitoring wells (204-RS2669, 204-RS2684, 204-RS2671, and K142-RS1224) are planned for closure following the baseline groundwater sampling but prior to the conduct of the groundwater treatment and excavations. Well closure will be completed following SOPP No. 21 in the IW QAPP (Shaw, 2013). Any wastes generated during well closure will be managed as IDW in accordance with the work plan and Section 14.4 of this worksheet.

14.7 Monitoring Well Installation and Development

Wells within the footprint of the excavation or injection areas that were closed will be replaced following the construction activities. Additionally, one new well (204-RS2824) will be installed in a downgradient location prior to the baseline groundwater sampling. These replacement wells (204-RS2791 through 204-RS2794) and the new downgradient well (204-RS2824) will be installed and developed in accordance with SOPP Nos. 17.0, 20.0, and 22.0 in the IW QAPP (Shaw, 2013). The replacement wells installed and developed following the completion of excavation activities will be added to the next scheduled sampling event (Appendix K).

14.8 Equipment Decontamination

Sampling equipment decontamination will be performed to maintain the integrity of the samples collected (i.e., to ensure that contaminants will not be introduced into samples from location to location). All equipment arriving on site will undergo a through decontamination prior to leaving the site. All equipment will be decontaminated in accordance with the requirements specified in SOPP No. 3.0, *Field Equipment Decontamination* (Shaw, 2013). All

Worksheet No. 14 Summary of Project Tasks

soils and water will be containerized in accordance with SOPP No. 4.0, *Investigative Derived Waste* (Shaw, 2013), and sampled as IDW/RDW (Section 4.8 of the CMI work plan and Worksheets No. 18 and No. 20 of the DCQAP).

14.9 Field Documentation

Field personnel are responsible for accurately documenting field activities and maintaining the records in a protective manner, safeguarding against damage or loss until submitted to the site supervisor or the project files. All field records are to be accurate, complete, and legible and shall contain sufficient detail to allow future reconstruction of the recorded event by someone other than the originator. Records may be completed electronically or manually.

Personnel completing records/forms shall observe the following minimum requirements:

- Keep all record entries concise and legible: make all entries in dark blue or black, indelible ink.
- Complete all forms in such a manner as to accurately and thoroughly document the activity.
- Use the military clock (24-hour) when recording time.
- When using a preprinted form, complete each blank or space. Mark “NA” or equivalent in each space that is not applicable to activity.
- Make any corrections or deletions required by drawing a single line throughout the entry and initialing and dating the correction.
- Do not use correction fluid/tape or erasers.

Worksheet No. 29, *Project Documents and Records Table*, in the IW QAPP (Shaw, 2013) provides details on records generation, maintenance, and archival and retrieval methods.

14.10 Quality Assurance/Quality Control Sample Collection

As summarized in Worksheet No. 20, *Field Quality Control Sample Summary,* QC samples collected as part of data collection activities will include equipment rinsate samples, field duplicates, and matrix spike (MS)/matrix spike duplicate (MSD) samples to monitor decontamination procedures, sample handling procedures, laboratory precision, accuracy, and sample matrix effects. Laboratory standard operating procedures (SOP) are available in Worksheet No. 19, *Analytical SOP Requirements* (Shaw, 2013).

14.10.1 Equipment Rinsate Samples

Equipment rinsate samples are blank samples collected to determine if the decontamination process has removed residual contamination from sampling equipment. The rinsate sample will consist of ASTM International Type II reagent-grade water poured over or through decontaminated sampling

Worksheet No. 14 Summary of Project Tasks

equipment into the appropriate sample containers. The rinsate will be analyzed for the same analytical parameters as the environmental samples. The data obtained from the rinsate samples will be used in the data validation process. Equipment rinsate samples will be collected as needed in accordance with IW QAPP (Shaw, 2013).

14.10.2 Field Duplicates

Field duplicates will be collected to assess the precision of the analytical process utilized in the analysis of the samples collected. The field duplicates will consist of a second sample collected at the same location as the original sample. The duplicate samples will be collected at predetermined locations and will be collected, handled, and transported in the same manner as the original samples. One field duplicate will be collected for every 10 regular environmental samples collected. All sampled media will include at least one field duplicate (Shaw, 2013). Field duplicates samples will not be collected for waste characterization samples since data validation is not required for waste characterization samples.

14.10.3 Matrix Spike/Matrix Spike Duplicates

MS/MSD samples will be collected to assess the laboratory precision, accuracy, and sample matrix effects. The MS/MSD samples will consist of a second and third sample collected at the same location as the original sample. The samples will be collected at predetermined locations and collected, handled, and transported in the same manner as the original samples. One MS/MSD will be collected for every 20 regular environmental samples collected. All sampled media will include at least one MS/MSD (Shaw, 2013). MS/MSD samples will not be collected for waste characterization samples since data validation is not required for waste characterization samples.

14.11 Sample Handling Procedures and Holding Times

All sample containers, handling, packaging, and shipping will be in accordance with SOPP No. 15.0, *Non-Hazardous Sample Handling, Packaging and Shipping,* in the IW QAPP (Shaw, 2013). Worksheet No. 20, *Field Quality Control Sample Summary,* provides the sample volume, sample container types, and sample frequency.

14.12 Sample Documentation Custody, Packaging, and Shipping

The field sampling team will maintain physical custody of the samples at all times prior to shipment to the analytical laboratory. Sample documentation custody, packaging, and shipping will be in accordance with SOPP No. 15.0, *Non-Hazardous Sample Handling, and Packaging and Shipping*, in the IW QAPP (Shaw, 2013). Worksheet No. 26.0, *Sampling Handling System,* identifies the personnel and the organizations that are responsible for sample custody, packaging, and shipment.

Worksheet No. 14 Summary of Project Tasks

14.13 Data Management and Validation

All analytical data generated from this project are managed in accordance with the procedures specified in the IW QAPP (Shaw, 2013). Samples collected during implementation of the sampling effort are analyzed using approved EPA SW-846 Update III Methods in accordance with the procedures in the U.S. Department of Defense Quality Systems Manual (U.S. Department of Defense, 2013) and laboratory SOPs as presented in Worksheet No. 19 (Shaw, 2013). Confirmation soil samples and baseline groundwater samples will also be validated. Reporting limits for the various analytes will be appropriate for comparing data against the decision criteria.

Sample data is validated by the CB&I validation team using the EPA Contract Laboratory Program National Functional Guidelines for organic and inorganic data review (EPA, 2008; 2010). The EPA Region 3 modifications to the National Functional Guidelines for organic and inorganic analyses (EPA, 1993; 1994) will be applied to blank contamination. Specific QC criteria identified in the IW QAPP (Shaw, 2013), analytical methods, and laboratory SOPs will be applied to all sample results. For those analytical methods not addressed by the validation guidelines, the evaluation is based on the published method requirements, laboratory-specific SOPs, and technical judgment following the logic of the Contract Laboratory Program validation guidelines for data qualification.

Worksheet No. 26 Sample Handling System

SAMPLE COLLECTION, PACKAGING, AND SHIPMENT (FIELD)
Sample Collection (Personnel/Organization): Wally Cooper or designee/CB&I
Sample Packaging (Personnel/Organization): Brian Rhodes or designee/CB&I
Coordination of Shipment (Personnel/Organization): Vicki Graves or designee/CB&I
Type of Shipment/Carrier: Cooler/Lab Courier, UPS
SAMPLE RECEIPT AND ANALYSIS
Sample Receipt (Personnel/Organization): Sample Custodians/Empirical Laboratory, LLC
Sample Custody and Storage (Personnel/Organization): Sample Custodians/Empirical Laboratory, LLC
Sample Preparation (Personnel/Organization): Extraction Lab, Metals Preparation Lab/Empirical Laboratory, LLC
Sample Determinative Analysis (Personnel/Organization): GC/Liquid Chromatography Lab, GC/MS Lab, Metals Preparation Lab/Empirical Laboratory, LLC
SAMPLE ARCHIVING
Field Sample Storage (No. of days from sample collection): 60 days from receipt
Sample Extract/Digestate Storage (No. of days from extraction/digestion): 3 months from sample extraction/ digestion
Biological Sample Storage (No. of days from sample collection): NA
SAMPLE DISPOSAL
Personnel/Organization: Sample Custodians/ Empirical Laboratory, LLC
Number of Days from Analysis: 30 days from submittal of final report or 60 days from receipt, whichever is longer

Post sample collection in the field will be conducted in accordance with SOPP 15.0 *Non-Hazardous Sample Handling, Packaging, and Shipping.* This procedure is located in the RSA installation-wide quality assurance program plan, Volume II (Shaw, 2013).

Specific laboratory sample custody procedures (receipt of samples, archiving, and disposal) will be used for all post-sample handling. Coolers will be received and checked for proper temperature. A sample cooler receipt form will be filled out to note the conditions and any discrepancies. The chain of custody will be checked against the sample containers for correctness. Samples will be logged into the data base and given a unique log number, which can be tracked through processing. The Project Chemist will be notified of any problems.

ATTACHMENT F-1

GENERAL SOIL ~~SAMPLING~~SAMPLE COLLECTION
~~EPA REGION 4 OPERATING PROCEDURE~~
~~(SESDPROC-300-R3)~~ALABAMA DEPARTMENT OF ENVIRONMENTAL MANAGEMENT
SOP #2150, REV 5.0, VERSION DATE 8/12/16

APPENDIX G

BEST MANAGEMENT PRACTICES

Appendix G

Alabama Best Management Practices
RSA-204, Oxidizer Facility, Building 7691
Operable Unit 10
U.S. Army Garrison-Redstone
Madison County, Alabama
EPA ID No. AL7 210 020 742

U.S. Army Garrison-Redstone
Madison County, Alabama

Prepared for:

Mission & Installation Contracting Command
ATTN: MICC Center – FSH
2107 17th Street
Building 4197, Suite 15
Fort Sam Houston, Texas 78234-5015

Prepared by:

CB&I Federal Services LLC
2410 Cherahala Boulevard
Knoxville, Tennessee 37932

Task Order 0008
Contract Number W91ZLK-09-D-0006
CB&I Project No. 147104

~~July~~September 2016

APPENDIX H

ENGINEERING CALCULATIONS

APPENDIX I

UNDERGROUND INJECTION CONTROL PERMIT

Class V Underground Injection Control Permit Application for Enhanced Biodegradation of Perchlorate in Groundwater RSA-204, Oxidizer Facility, Building 7691 U.S. Army Garrison-Redstone Madison County, Alabama

Prepared for:

Mission & Installation Contracting Command
ATTN: MICC Center - FSH
2107 17th Street
Building 4197, Suite 15
Fort Sam Houston, Texas 78234-5015

Prepared by:

CB&I Federal Services LLC
2410 Cherahala Boulevard
Knoxville, Tennessee 37932

Contract Number DACA21-96-D-0018
CB&I Project Number 147104
Task Order 0008

~~July~~September 2016

Performance monitoring will be initiated following completion of the first round of injections. Performance monitoring will be performed at the following frequency:

- Year 1; quarterly sampling of ~~23~~26 wells (approximately 30 days, 120 days, 210 days and 300 days after reagent injections)
- Year 2; semi-annual sampling of ~~23~~26 wells
- Year 3; semi-annual sampling of ~~23~~26 wells.

Additional monitoring will be completed past Year 3; however, exact number of wells, locations, and frequency may change based on the first three years of data. The ISEB performance monitoring analytical program will consistent of VOCs, perchlorate, explosives, dissolved gases (methane, ethane, ethane, and acetylene), total and dissolved metals (manganese, arsenic, chromium, and iron), anions (nitrate and sulfate), iron II, total organic carbon, and alkalinity. Total organic carbon will provide an indicator of the remaining EVO (i.e., organic carbon) available for a microbial food source that is remaining in the aquifer.

MSDS for EVO and diammonium phosphate are included in the Attachments.

F. Hydrological Data

Groundwater beneath RSA-204 occurs in the unconsolidated overburden and in the upper portion of the carbonate bedrock. The overburden and upper bedrock comprise a single interconnected aquifer. At depth, groundwater occurs under semi-confined conditions, flowing along discrete joints and bedding-plane partings. The water table across RSA-204 and the larger RSA-146 groundwater unit is generally flat, mimicking local topography. Figure I-4 shows groundwater flow based on the groundwater elevation measured in April 2016. Groundwater flow direction is radial at RSA-204. Average depth to groundwater in overburden and interface wells in proximity to RSA-204 fluctuates seasonally, ranging from approximately 6.5 to 23 feet below ground surface (bgs) with a seasonal average depth of approximately 16 feet bgs. The groundwater elevations in overburden and interface monitoring wells ranged from 559.4 to 575.5 ft amsl. Four shallow bedrock wells were installed in summer of 2014 (204-RS2668, 204-RS2669, 204-RS2670, and 204-RS2671). Depth to water in these bedrock wells (measured in December 2014) ranged from 14.32 to 18.73 ft bgs. The groundwater elevations in bedrock monitoring wells ranged from 562.20 to 563.46 ft amsl.

Form 531 is included in Attachment 2. Boring logs for all existing wells are provided in Attachment 3 to this application.

APPENDIX J

NOTICE OF ENVIRONMENTAL USE RESTRICTIONS

APPENDIX K

LONG-TERM MONITORING PLAN

Long-Term Monitoring Plan
RSA-204, Oxidizer Facility, Building 7691
Operable Unit 10
U.S. Army Garrison-Redstone
Madison County, Alabama
EPA ID No. AL7 210 020 742

Prepared for:

Mission & Installation Contracting Command
ATTN: MICC Center – FSH
2107 17th Street
Building 4197, Suite 15
Fort Sam Houston, Texas 78234-5015

Prepared by:

CB&I Federal Services LLC
2410 Cherahala Boulevard
Knoxville, Tennessee 37932

Contract No. W91ZLK-09-D-0006
CB&I Project No. 147104
Task Order 0008

~~July~~September 2016

2.5 Groundwater

Groundwater beneath RSA-204 occurs in the unconsolidated overburden and upper portion of the carbonate bedrock, primarily as a single interconnected aquifer. The water table across RSA-204 and the larger RSA-146 groundwater unit is generally flat, mimicking local topography. Average depth to groundwater in overburden and interface wells in proximity to RSA-204 fluctuates seasonally, ranging from approximately 6.5 to 23 feet below ground surface.

3.0 Groundwater Monitoring Program

The long-term groundwater monitoring program for RSA-204 includes wells proposed for monitoring, sampling frequency and sampling parameters, sampling and analytical protocol, and quality assurance (QA)/quality control (QC) requirements. The laboratory-specific reference limits and evaluation tables are presented in the installation-wide (IW) quality assurance program plan (QAPP), Volume 1, Worksheet No. 15, and Attachment 2a (Shaw, 2013b). Site-specific information listing the analyses to be performed and other analytical requirements are presented in Tables 3-1 and 3-2 of this LTM plan. LTM is proposed for 30 years for the RSA-204 site. Note that only Years 1 through 3 are planned in this LTM plan. It is anticipated that LTM for Year 4 may be slightly different than what is proposed here and can be adjusted in the recommendations section of the annual LTM report for Year 3.

3.1 Objectives

Long-term groundwater monitoring will be performed to evaluate the treatment performance of the groundwater resulting from the ISEB and MNA. The monitoring data will also be used to ensure that perchlorate is not continuing to leach from RSA-204 soils to groundwater after the soil excavation and localized capping of perchlorate-contaminated corrective measures. Baseline groundwater sampling at ~~23~~26 monitoring wells within the treatment area will be performed during preliminary CMI activities (CMI work plan Section 4.3).

The monitoring program is designed to maximize cost-effectiveness without compromising program and data quality using the following general strategies:

- Select and maintain a minimized number of sampling points and an appropriate analytical suite to evaluate the progress of MNA in groundwater.
- Choose wells that act as location triggers to plume movement, are located to access progress in achieving the groundwater cleanup goals, and have the highest probability of detecting potential contaminants leaching from RSA-204 soils to groundwater.
- Maintain surveillance for contaminant migration away from RSA-204.

- Minimize frequency of conventional and/or mainstream sampling programs.
- Utilize less-expensive analytical programs instead of conventional and/or mainstream sampling programs.
- Initiate a streamlined data management and reporting information system.

3.2 Proposed Monitoring Wells

The following existing wells at RSA-204 are scheduled for LTM (Figure K-1):

Location	Zone	Rationale for Inclusion
K-RS690	Overburden	Monitor explosives concentrations
K-RS691	Interface	Monitor perchlorate and explosives concentrations along the eastern plume fringe
K142-RS1223	Interface	Monitor explosive concentrations
K204-RS1550	Overburden	Monitor TCE and explosives east of Bldg 7687
204-RS2027	Interface	Monitor TCE/perchlorate downgradient
204-RS2029	Interface	Monitor perchlorate; fringe of Treatment Area 2
204-RS2030	Interface	Monitor upgradient perchlorate and explosives concentrations
204-RS2031	Interface	Monitor perchlorate; upgradient
204-RS2032	Interface	Monitor perchlorate; fringe of Treatment Area 2
204-RS2033	Interface	Monitor explosives concentrations
204-RS2034	Interface	Monitor TCE/perchlorate; downgradient
204-RS2668	Bedrock	Monitor perchlorate; downgradient
204-RS2670	Bedrock	Monitor perchlorate; between Treatment Areas 1 and 2
204-RS2672	Interface	Monitor perchlorate; upgradient
204-RS2673	Interface	Monitor perchlorate; fringe of Treatment Area 1
204-RS2674	Interface	Monitor perchlorate; fringe of Treatment Area 1
204-RS2675	Overburden	Monitor perchlorate; between Treatment Areas 1 and 2
204-RS2676	Overburden	Monitor perchlorate; between Treatment Areas 1 and 2
204-RS2677	Overburden	Monitor perchlorate; fringe of Treatment Area 2
204-RS2678	Overburden	Monitor perchlorate; fringe of Treatment Area 2
204-RS2683	Overburden	Monitor TCE and perchlorate; downgradient
204-RS2791	Interface	Monitor perchlorate; source of Treatment Area 1
204-RS2792	Bedrock	Monitor perchlorate; source of Treatment Area 1
204-RS2793	Interface	Monitor perchlorate; source of Treatment Area 2
204-RS2794	Bedrock	Monitor perchlorate; source of Treatment Area 2
204-RS2824	Interface	Proposed well; monitor TCE/perchlorate in downgradient area of the site

Well locations included in the LTM program were selected based on their proximity to the plume and their locations with respect to the apparent transport direction of the perchlorate plume, which is from the south-southeast to the north-northwest. Both overburden/interface and shallow bedrock wells were included to monitor downgradient, plume source, cross-gradient plume fringe, and upgradient areas of the site. Additionally, wells K-RS690, 204-RS2683, and

K204-RS1550, where isolated hotspots for TCE or explosives were found, are also included in the monitoring program. All proposed monitoring wells will be sampled for TCL VOCs, perchlorate, explosives, water quality and MNA parameters, as presented in Table 3-1. Recommendations for additional well closure will be included in the annual CMI effectiveness reports, as appropriate.

3.3 Constituent List and Sampling Frequency

Based on the human health risk assessment, the following COCs are to be monitored as part of the corrective measures: perchlorate, TCE, 2-nitrotoluene, 2,6-dinitrotoluene, and RDX. The performance monitoring analytical program will consist of the following:

- Volatile organic compounds
- Perchlorate
- Explosives
- Total and dissolved metals (manganese, arsenic, iron, and chromium)
- Dissolved gases (methane, ethane, ethane, and acetylene)
- Anions (nitrate and sulfate)
- Total iron
- Total organic carbon, and
- Alkalinity.

Total organic carbon will provide an indicator of the remaining emulsified vegetable oil (i.e., organic carbon) available for a microbial food source that is remaining in the aquifer. In addition, water quality parameters will be monitored, including pH, temperature, conductivity, oxidation-reduction potential, dissolved oxygen, and turbidity. Water levels will also be measured during each sampling event. This monitoring program will be used to evaluate progress toward meeting the corrective measure objective for groundwater and the cleanup goals. The analytical program will monitor for COCs in groundwater as well as for additional analytes to track progress of the ISEB treatment and MNA.

In order to meet the objectives of this LTM plan, LTM groundwater sampling will be conducted quarterly for the first year following the first round of injections and groundwater will continue to be monitored on a semiannual basis for the next two years. After three years, LTM is planned to continue until it is demonstrated that the CGs have been achieved (e.g., annually until Year 30).

3.4 Sampling and Analytical Protocol

All data will be collected, stored, and managed in accordance with the requirements defined by the IW QAPP (Shaw, 2013b) and the installation-wide safety and health plan (Shaw, 2003).

All sample preparation and analysis shall be completed within the method-required holding times specified in Table 3-2. The holding time of a sample begins at the time of sample collection. If holding times are exceeded and the analyses are performed, the results shall be flagged accordingly.

4.0 Data Evaluation and Reporting

4.1 Data Evaluation and Interpretation

Groundwater monitoring will commence after the first round of reagent injections has been conducted. The schedule for the first year will consist of sampling approximately 30 days, 120 days, 210 days, and 300 days after the first injection round. Replacement wells installed following the completion of excavation activities will be added to the next scheduled sampling event following their installation and development. Samples will be collected from the ~~23~~26 groundwater monitoring wells in and around the treatment area as shown on Figure K-1. The samples will be collected using low-flow purging and sampling techniques. The long-term groundwater monitoring samples will be analyzed for the same analytes and field parameters as the baseline sampling event.

The data collected from the baseline groundwater sampling and the quarterly first-year sampling events following the first injection round will be used to plan the second round of injections. A second round of direct-push technology injections is planned approximately 1 year after the initial emulsified vegetable oil solution injection round to address any remaining residual hot spots or perchlorate rebound areas within the treatment areas. The sampling frequency during this second year as well as the third year will be semiannual. Groundwater sampling in years 4 through 30 (anticipated to be the end of the corrective measures) will be conducted annually.

The primary objective of the groundwater monitoring program for RSA-204 is to determine whether the corrective measures reduce COC concentrations in groundwater beneath the site to levels determined to be acceptable to human health (i.e., cleanup goals). This will be determined based on the results of a statistical test or other methods. Statistical analysis will follow ADEM Administrative Code 335-14-5-.06(8)(h) and EPA guidance for groundwater monitoring at RCRA facilities (EPA, 1989; 1992; 2009).

As allowed under these regulations, data from eight groundwater sampling rounds (years 1 through 3) will be used to calculate nonparametric 95 percent upper tolerance limits or 95 percent upper prediction limits for the site COCs. These values will be calculated separately for the overburden and bedrock groundwater zones. Groundwater data collected during subsequent sampling events will be compared to these values. COCs that exceed these values

may be subjected to additional analysis as allowed in ADEM Administrative Code 335-14-5-.06(8)(h). The additional analyses may include, for example, control charts, Wilcoxon rank sum tests, box plots, and/or temporal trend analysis, as appropriate. Specific evaluation techniques will depend upon the detection frequencies and statistical distributions of each COC. For example, one COC concentration at a given well may exceed the site-specific upper tolerance limit or upper prediction limit, and that could be either a random occurrence or indicative of an increasing trend. Trend analysis will indicate if a trend is present and whether it has statistical significance.

Well data sets that pass statistical comparison tests (i.e., wells that do not demonstrate statistically significant increases over baseline concentrations) for all COCs will be sampled on an annual basis, in accordance with planned activities. Wells that fail statistical comparison tests for one or more COCs will be resampled. Following the collection of these additional data, statistical evaluation will again be performed and reported, along with recommendations for adjustment to sampling frequency, if appropriate.

Non-statistical methods may also be used to characterize RSA-204 groundwater conditions and may include the following:

- ***Hydrographs.*** Graphs of water levels versus time may be constructed to determine increases, decreases, seasonal, or man-made fluctuations in groundwater levels.
- ***Potentiometric Surface Maps.*** Depths to groundwater from multiple wells may be used to construct potentiometric surface contour maps and to estimate flow directions.
- ***Concentration-versus-Time Plots.*** Graphs of COC concentrations versus time at each well will be constructed for each data set subjected to trend analysis. This supports the identification of trends and helps determine if concentration changes are related to changes in water level, changes in groundwater flow directions, or natural attenuation.
- ***Plume Maps.*** Maps depicting the physical distribution of chemical constituents will aid in determining movement of plumes.
- ***Geochemical Evaluation.*** For inorganic constituents that fail statistical comparison tests, geochemical evaluation may be performed to determine which concentrations may be naturally elevated and which concentrations may have a contaminant source.

4.2 Reporting

Based on the proposed sampling schedule, an annual CMI effectiveness report will be prepared after ~~each~~ four quarters of data collection for the first year of the LTM and then after ~~each~~ two

semiannual data collection events for the following two years to demonstrate the effectiveness and success of the final corrective action program for RSA-204 groundwater. The effectiveness report will be compliant with provisions of the ADEM Administrative Code Rule 335-14-5-.06(10), which states that a compliance monitoring program must be implemented encompassing the extent of the contaminant plumes, and be maintained as long as necessary to achieve compliance with the CGs. The annual report will discuss the most recent sampling events and relate the findings as they pertain to treatment performance for the groundwater contaminants. The groundwater flow rate and direction in the overburden/interface zone will be determined annually and the data and maps will be included in effectiveness report pursuant to ADEM AAC Rule 335-14-5-.06(10)(e). The RSA-204 compliance monitoring program will address provisions for determining whether there is statistically significant evidence of increased contamination for any chemical parameter or hazardous constituent pursuant to ADEM AAC Rule 335-14-5-.06(10)(d) and ADEM AAC Rule 335-14-5-.06(10)(f).

Recommendations for changes to the sampling frequency, wells sampled, and parameters for analysis, if appropriate, will be included in the reports. At a minimum, the groundwater monitoring report will include a discussion of sampling activities, tables, and maps to document contaminant concentrations in groundwater, and an evaluation of the groundwater contaminant data. Other recommendations may include installation of additional monitoring wells and resampling for verification of sampling results. Record keeping for data and reports are described in the ~~IW~~installation-wide QAPP (Shaw, 2013b).

5.0 Monitoring Well Maintenance Plan

In order to maintain consistent data quality and track contaminant concentrations and migration, the wells at RSA-204 will have to be maintained and/or replaced, as necessary. This chapter presents the well maintenance plan for these monitoring wells. Further details are presented in the IW QAPP (Shaw, 2013b).

5.1 Well Redevelopment

Wells may be redeveloped prior to sampling if any of the following conditions are exhibited at the well:

- Sediment accumulation in the well covers more than 5 percent of the total length of the well screen.
- Turbidity of groundwater is greater than 20 nephelometric turbidity units after the well has been purged prior to sampling.

- Recharge rate to the well has declined through time (e.g., recharge rates have declined to less than 60 percent of the recharge rate recorded in the initial development).

5.2 Well Replacement or Closure

If, after two episodes of redevelopment, the well still does not meet the requirements set forth in Section 5.1, the well may be deemed nonfunctional and scheduled for replacement or closure. Consultation with RSA personnel, technical consultants, or ADEM staff may be made, if appropriate, to determine if closure or replacement is indeed necessary. The procedures for well replacement or closure are outlined in the IW QAPP (Shaw, 2013b).

5.3 Well Inspections

Site inspections will be performed to help ascertain the condition of monitoring wells and confirm the integrity of the monitoring wells has not been compromised. Wells will be inspected during each sampling event. All monitoring wells in the monitoring well program will be sampled annually, at a minimum. The groundwater monitoring wells at the site will be inspected for the integrity of the following:

- Locks
- Locking cap
- Protective casing
- Bollards (stick-up wells only)
- Concrete pad.

Each site inspection will be documented. Deficiencies will be documented and corrected as soon as practical, but not less than annually. If a well cannot be properly repaired, it should be replaced or closed.

6.0 Engineered Cap and Land Use Control Inspections

RSA will perform inspections on a semiannual basis to ensure continued integrity of the remedy. General site inspections of the localized cap at Building 7689 shall be conducted semiannually to ensure that the integrity of the engineered cover is maintained and to ensure that land use remains appropriately restricted per the environmental ~~covenant~~restriction.

- ~~Site inspections~~Inspections will consist of a complete walkthrough and visual inspection of the cap area.
- The capped area will be covered with concrete and adjacent areas are the responsibility of the RSA operations and maintenance staff to mow and maintain.
- Repair of a disturbance or breach of the cap shall be initiated within 10 days of identifying the need for such repairs.

- Repairs to the warning signs shall be completed as needed and initiated within 10 days of identifying the need for such repairs. Prior to modifications in the frequency of inspection, the Army will submit a request to ADEM for review and approval.

- ~~The capped area will be paved with concrete. Adjacent areas to the cap will be mowed a minimum of twice a year.~~

The frequency of inspections can be scaled back to once per year, once conditions of the cap have stabilized over a minimum period of two years. The cap and LUC inspection form is included as Attachment 1 to this LTM Plan. Completed cap and LUC inspection forms will be included in the CMI effectiveness reports. Prior to modifications in the frequency of inspection the Army will submit a request to ADEM for review and approval.

7.0 References

Bhate Environmental Associates, Inc. (Bhate), 2003, ***Draft Confirmatory Sampling Report, Solid Waste Management Units (85, 86, 158, 159, 160, 161, 162, 163, 164, 165, 166, 167, 168, 169, 170, 171, 172, 173, 174, 175, 176, 177, 178, 179, 180, 181, and 182), Redstone Arsenal Huntsville, Alabama***, April.

CB&I Federal Services LLC (CB&I), 2016, ***Final Revision 1 Corrective Measures Study Report, RSA-204, Oxidizer Facility, Building 7691, Operable Unit 10, U.S. Army Garrison-Redstone, Madison County, Alabama,*** July.

CB&I Federal Services LLC (CB&I), 2015, ***Revision 1 RSA-146 Groundwater Site, Groundwater Unit GW-02, RCRA Facility Investigation Report, Redstone Arsenal, Madison County, Alabama***, December.

CH2M Hill, 1998, ***Draft Final Report of Findings, RARE North Plant Phase II EBS, Redstone Arsenal, Madison County, Alabama***, prepared for the U.S. Army Corp of Engineers, Mobile District, Mobile, Alabama, April.

Conestoga-Rovers & Associates, 1996, ***Phase I Environmental Baseline Study, Redstone Arsenal Rocket Engine Facility North Plant, Madison County, Alabama***, prepared for Thiokol Corporation, November.

IT Corporation, 2002, ***Draft-Final Site-Specific Work Plan, Phase II Remedial Investigation, Operable Unit 10, Revision 1, Redstone Arsenal, Madison County, Alabama***, prepared for the U. S. Army Corps of Engineers, Savannah District, Savannah, Georgia, April.

IT Corporation, 2001, ***Site-Specific Work Plan, Phase II Remedial Investigation, Operable Unit 10, Redstone Arsenal, Madison County, Alabama***, prepared for the U.S. Army Corps of Engineers, Savannah District, Savannah, Georgia, April.

RESPONSES TO COMMENTS

DEPARTMENT OF THE ARMY
US ARMY INSTALLATION MANAGEMENT COMMAND
HEADQUARTERS, UNITED STATES ARMY GARRISON, REDSTONE
4488 MARTIN ROAD
REDSTONE ARSENAL, ALABAMA 35898-5000

REPLY TO
ATTENTION OF

MAR 2 4 2016

Environmental Management Division

Received
MAR 2 9 2016
Land Division

Mr. Phillip D. Davis
Chief, Land Division
Alabama Department of Environmental Management
Post Office Box 301463
Montgomery, AL 36130-1463

Dear Mr. Davis:

References:

a. Installation Restoration Program at Redstone Arsenal, Alabama (EPA ID AL7 210 020 742).

b. Resource Conservation and Recovery Act Corrective Action Program at Redstone Arsenal, Alabama (EPA ID AL7 210 020 742)

c. Redstone Arsenal's Alabama Hazardous Wastes Management and Minimization Act Hazardous Waste Storage Facility/Thermal Treatment/Solid Waste Management Unit Corrective Action Permit, dated September 30, 2010, modification #6, dated July 6, 2015.

This letter transmits the submittal of the Corrective Measures Implementation Work Plan, RSA-227, Inactive Washrack Adjacent to Building 5492, Operable Unit 06, US Army Garrison-Redstone, Madison County, Alabama for your review.

Copies of this correspondence are being furnished to Mr. Keith West, Alabama Department of Environmental Management; Mr. Alan Farmer, Resource Conservation and Recovery Act Division; Ms. Michelle Thornton, US Environmental Protection Agency, Region 4; Mr. Jeffrey L. Davis, US Army Environmental Command; Mr. John Guarisco, Alabama Department of Public Health; Ms. Samantha J. Strickland, Environmental Permits and Compliance; Mr. Dwight Cooley, Wheeler National Wildlife Refuge and Mr. Brian Roberson, Marshall Space Flight Center.

My point of contact for this matter is Ms. Terry de la Paz, Environmental Management Division, 256-955-6968 or e-mail terry.m.delapaz.civ@mail.mil.

Sincerely,

Terry W. Hazle
Chief, Environmental Management
Division

Enclosure

DEPARTMENT OF THE ARMY
US ARMY INSTALLATION MANAGEMENT COMMAND
HEADQUARTERS, UNITED STATES ARMY GARRISON, REDSTONE
4488 MARTIN ROAD
REDSTONE ARSENAL, ALABAMA 35898-5000

REPLY TO
ATTENTION OF

MAR 2 4 2016

Environmental Management Division

Mr. Phillip D. Davis
Chief, Land Division
Alabama Department of Environmental Management
Post Office Box 301463
Montgomery, AL 36130-1463

Dear Mr. Davis:

References:

a. Installation Restoration Program at Redstone Arsenal, Alabama (EPA ID AL7 210 020 742).

b. Resource Conservation and Recovery Act Corrective Action Program at Redstone Arsenal, Alabama (EPA ID AL7 210 020 742)

c. Redstone Arsenal's Alabama Hazardous Wastes Management and Minimization Act Hazardous Waste Storage Facility/Thermal Treatment/Solid Waste Management Unit Corrective Action Permit, dated September 30, 2010, modification #6, dated July 6, 2015.

This letter transmits the submittal of the Corrective Measures Implementation Work Plan, RSA-227, Inactive Washrack Adjacent to Building 5492, Operable Unit 06, US Army Garrison-Redstone, Madison County, Alabama for your review.

Copies of this correspondence are being furnished to Mr. Keith West, Alabama Department of Environmental Management; Mr. Alan Farmer, Resource Conservation and Recovery Act Division; Ms. Michelle Thornton, US Environmental Protection Agency, Region 4; Mr. Jeffrey L. Davis, US Army Environmental Command; Mr. John Guarisco, Alabama Department of Public Health; Ms. Samantha J. Strickland, Environmental Permits and Compliance; Mr. Dwight Cooley, Wheeler National Wildlife Refuge and Mr. Brian Roberson, Marshall Space Flight Center.

My point of contact for this matter is Ms. Terry de la Paz, Environmental Management Division, 256-955-6968 or e-mail terry.m.delapaz.civ@mail.mil.

Sincerely,

Terry W. Hazle
Chief, Environmental Management
Division

Enclosure

Corrective Measures Implementation Work Plan
RSA-227, Inactive Washrack Adjacent to Building 5492
Operable Unit 6
U.S. Army Garrison-Redstone
Madison County, Alabama
EPA ID No. AL7 210 020 742

Prepared for:

Mission & Installation Contracting Command
ATTN: MICC Center – FSH
2107 17th Street
Building 4197, Suite 15
Fort Sam Houston, Texas 78234-5015

Prepared by:

CB&I Federal Services LLC
2410 Cherahala Boulevard
Knoxville, Tennessee 37932

Task Order 0008
Contract No. W91ZLK-09-D-0006
CB&I Federal Services LLC
Project No. 147104

March 2016

Corrective Measures Implementation Work Plan
RSA-227, Inactive Washrack Adjacent to Building 5492
Operable Unit 6

U.S. Army Garrison-Redstone
Madison County, Alabama
EPA ID No. AL7 210 020 742

Certification

I certify under penalty of law that this document and all attachments were prepared under my direction or supervision in accordance with a system designed to assure that qualified personnel properly gather and evaluate the information submitted. Based on my inquiry of the person or persons who manage the system, or those persons directly responsible for gathering the information, the information submitted is, to the best of my knowledge and belief, true, accurate, and complete. I am aware that there are significant penalties for submitting false information, including the possibility of fine and imprisonment for knowing violations.

Martha Adams

Martha J. Adams
Alabama PE No. 33086

3.22.16
Date

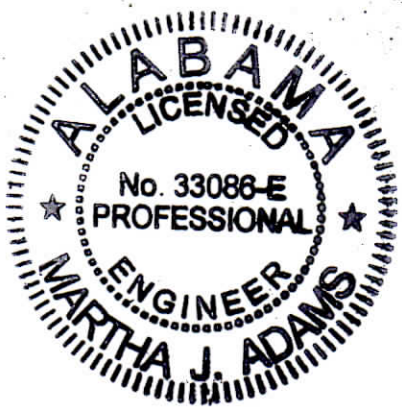

Table of Contents

Page

List of Appendices iv
List of Tables v
List of Figures v
Executive Summary 1
1.0 Introduction 1-1
1.1 Purpose 1-1
1.2 RSA-227 Overview 1-2
1.3 Document Organization 1-3
2.0 Investigation Results 2-1
2.1 Investigation History 2-1
2.2 Nature and Extent of Contamination 2-2
2.3 Fate and Transport Summary 2-3
2.4 Site Risk Summary 2-3
2.4.1 Land and Resource Use 2-4
2.4.2 Human Health ARBCA 2-4
2.5 Screening-Level Ecological Risk Assessment 2-7
2.6 Final Conceptual Site Model 2-8
2.7 Summary 2-8
3.0 Decision Summary 3-1
3.1 Basis for the Action 3-1
3.1.1 Objectives of the Corrective Measures 3-1
3.1.2 Cleanup Goals for the Corrective Measures 3-1
3.1.3 Need for Corrective Measures 3-3
3.1.4 Scope and Role of Operable Unit or Response Action 3-3
3.1.4.1 Overall Remedial Strategy for Redstone Arsenal and RSA-227 3-3
3.1.4.2 Scope of Problems Addressed by RSA-227 Corrective Measures 3-5
3.2 Selected Corrective Measures 3-5
3.2.1 Soil Excavation and Off-Site Disposal 3-5
3.2.2 Summary of the Corrective Measure Alternatives Evaluation 3-5
3.3 Extent of Contaminated Soil 3-6
3.4 Request for Permit Modification 3-6
4.0 Corrective Measures Implementation 4-1
4.1 General Scope 4-1

Table of Contents *(Continued)*

Page

4.1.1 Procurement and Subcontracting 4-2
4.1.2 Field Personnel 4-2
4.2 Preliminary Activities 4-3
4.2.1 Mobilization 4-3
4.2.2 Access to Redstone Arsenal 4-3
4.2.3 Locating, Marking, and Surveying of Excavation 4-4
4.2.4 Digging Permit and Utility Markout 4-4
4.2.5 Site Control 4-4
4.2.6 Storm Water, Erosion, and Sediment Controls 4-5
4.2.7 Well Closure 4-5
4.2.8 Daily Reports 4-5
4.3 Stockpile Work Area 4-6
4.4 Washrack and Sump Removal 4-6
4.5 Soil Excavation 4-7
4.6 Confirmation Sampling 4-8
4.7 Remediation-Derived Waste/Investigation-Derived Waste Management 4-10
4.8 Waste Characterization 4-12
4.9 Waste Soil Transportation and Disposal 4-13
4.10 Post-Excavation Activities 4-14
4.10.1 Backfilling and Site Restoration 4-14
4.10.2 Equipment Decontamination 4-15
4.10.3 Temporary Storm Water, Erosion, and Sediment Control Removal 4-16
4.10.4 Demobilization 4-16
4.11 Inspections for Field Activities 4-16
4.12 Corrective Measures Implementation Reporting 4-17
5.0 Contingencies 5-1
5.1 Excavation Beyond Proposed Boundaries 5-1
5.2 Discovery of Subsurface Contaminant Sources 5-1
5.3 Excavation Dewatering 5-2
5.4 Excavation of Unknown Utilities 5-2
5.5 Saturated Soil Removal 5-3
5.6 Discovery of Munitions and Explosives of Concern/Chemical Warfare Materiel 5-3
6.0 References 6-1

Table of Contents *(Continued)*

Page

Attachment 1 – List of Acronyms and Abbreviations

List of Appendices

Appendix	*Title*
A	Redstone RCRA Permit Modification Request
B	Corrective Measures Implementation Schedule
C	Site-Specific Safety and Health Plan
D	Construction Quality Assurance Plan
E	Data Collection Quality Assurance Plan
F	Best Management Practices

List of Tables

Table	Title	Follows Tab
2-1	Summary of Receptor Cancer Risk and Noncancer Hazard for Chemicals of Concern – RSA-227, Reasonable Maximum Exposure	
2-2	Summary of Receptor Cancer Risk and Noncancer Hazard for Chemicals of Concern - Ditch, Reasonable Maximum Exposure	
2-3	Conclusions of the ARBCA RM-2 Evaluation – RSA-227 and the Ditch	
3-1	Derivation of Soil Cleanup Goals for Direct Exposure – Hypothetical Resident	
3-2	Summary of Cleanup Goals	
3-3	Benzo(a)pyrene Equivalent Cleanup Goal Evaluation	
4-1	Excavation Areas and Volumes	

List of Figures

Figure	Title	Follows Tab
1-1	RSA-227 Site Location Map	
1-2	RSA-227 and Ditch Site Map	
2-1	RSA-227 and Ditch Chemicals of Concern Exceeding Cleanup Goals	
4-1	RSA-227 Proposed Soil Excavation Areas	
4-2	RSA-227 Proposed Stockpile and Erosion and Sedimentation Control Locations	
4-3	RSA-227 Confirmation Sample Locations	
4-4	RSA-227 Excavation Sidewall Confirmation Sampling Approach	
4-5	RSA-227 Excavation Floor Confirmation Sampling Approach	

Executive Summary

CB&I Federal Services LLC, on behalf of the U.S. Army Garrison–Redstone, has prepared this corrective measures implementation work plan for Redstone Arsenal, Madison County, Alabama, under the management of the U.S. Army Environmental Command. The Mission & Installation Contracting Command has contracted CB&I Federal Services LLC under Contract Number W91ZLK-09-D-0006 to perform environmental remediation and restoration and program management services at Redstone Arsenal under the Resource Conservation and Recovery Act Corrective Action program in accordance with Redstone Arsenal's hazardous waste permit (U.S. Environmental Protection Agency ID #: AL7210020742). This corrective measures implementation work plan has been developed to provide technical guidance for implementing the corrective measures selected for RSA-227, Inactive Washrack Adjacent to Building 5492.

RSA-227 occupies approximately 0.04 acre in the central portion of Redstone Arsenal, north of Mills Road in the maintenance shop complex (Buildings 5494/5495). The site lies above groundwater unit RSA-147, which covers approximately 1,300 acres in the central portion of Redstone Arsenal.

This corrective measures implementation work plan describes the corrective measures necessary to support unrestricted reuse of the surface media at RSA-227. Corrective measures are warranted at RSA-227 because the presence of contaminated soil poses risks to commercial workers and potential future residential receptors from direct contact with surface (defined as 0 to 1 foot below ground surface) and subsurface soil. The selected corrective measures manage the risks by excavation and off-site disposal of arsenic and polynuclear aromatic hydrocarbon-contaminated soils at RSA-227. Upon completion of corrective measures, the U.S. Army Garrison-Redstone intends for cleanup of the contamination present in soil to result in unrestricted reuse as defined in Alabama Administrative Code 335-5 for surface media at the site.

This work plan incorporates applicable elements of Alabama Department of Environmental Management Hazardous Waste Facility Permit No. AL7 210 020 742 and the most recent edition of the Alabama Environmental Investigation and Remediation Guidance. This work plan is submitted to fulfill in part the requirements listed in Section VI.E.1 of Redstone Arsenal's Resource Conservation and Recovery Act permit. As specified in Section VI.E.3 of that permit, a request for permit modification is included as part of this plan.

The purpose of this work plan is to describe the corrective measures necessary to address risks posed by contamination present in soils at RSA-227 to commercial workers and hypothetical future residential receptors. The U.S. Army Garrison-Redstone intends for cleanup of the contamination present in soil to result in unrestricted reuse for surface media at the site.

The RSA-227 Resource Conservation and Recovery Act facility investigation defined the nature and extent of contamination and evaluated potential risks to current and future receptors and concluded that corrective measures are required to attain site closure. The Alabama Risk-Based Corrective Action evaluation identified arsenic and certain polynuclear aromatic hydrocarbons in soil as relevant chemicals of concern warranting action.

The Army has elected to perform corrective measures to remove and dispose of arsenic- and polynuclear aromatic hydrocarbon-contaminated soils at RSA-227 to permanently address this problem. For administrative purposes, separate surface sites and groundwater units have been established for Redstone Arsenal for evaluation and cleanup under the Resource Conservation and Recovery Act process. Groundwater cleanup at RSA-227 will occur in conjunction with the corrective measures planned as part of groundwater unit RSA-147, as has been codified in the Army's groundwater responsibility information matrix.

The background screening values for arsenic of 15 milligrams per kilogram for surface soil and 18 milligrams per kilogram for subsurface soil are selected as the cleanup goals for the chemical. The cleanup goal and corrective measures objective will be met for arsenic as long as the confirmatory soil samples have arsenic concentrations less than or equal to the background screening values or the arsenic concentrations are determined by a site-to-background comparison to be naturally occurring. The cleanup goals for the polynuclear aromatic hydrocarbons benzo(a)anthracene, benzo(a)pyrene. benzo(b)fluoranthene, dibenz(a,h,)anthracene, and indeno(1,2,3-cd)pyrene are based on future residential use of the site to allow for unrestricted use of surface media at this site. The cleanup goals and corrective measures objective will be met for polynuclear aromatic hydrocarbons when the benzo(a)pyrene equivalent concentration is less than or equal to the benzo(a)pyrene equivalent cleanup goal of 0.62 milligrams per kilogram.

The corrective measures involve excavation and off-site disposal of arsenic- and polynuclear aromatic hydrocarbon-contaminated soils at RSA-227. The following excavation/removal activities are planned:

- The projected excavation/removal area at RSA-227 covers a total of approximately 1,400 square feet from five areas. These areas include the concrete washrack, concrete sump and three areas with arsenic and polynuclear aromatic hydrocarbon-

contaminated soils. Removal of the existing concrete washrack and associated concrete sump will be performed as a precautionary measure to eliminate the threat of potential contamination from future use. Each individual soil location will be excavated to 1 foot below the contaminated interval. CB&I Federal Services LLC estimates that the in-place volume excavated from the RSA-227 will be approximately 110 bank cubic yards (140 loose cubic yards).

Excavated soil will be stockpiled for disposal sampling and is expected to be transported to and disposed of at a Subtitle D landfill as special waste.

This corrective measures implementation work plan presents the specific activities necessary to implement the corrective measures. These activities include procurement and subcontracting, mobilization, soil excavation, collection of confirmation and waste characterization samples, transportation and disposal of excavated material, and site restoration.

The following plans and supporting documentation are included as appendices to this corrective measures implementation work plan:

- Redstone Resource Conservation and Recovery Act Permit Modification Request
- Corrective Measures Implementation Schedule
- Site-Specific Safety and Health Plan
- Construction Quality Assurance Plan
- Data Collection Quality Assurance Plan
- Best Management Practices for Storm Water Control.

1.0 Introduction

CB&I Federal Services LLC (CB&I), on behalf of the U.S. Army Garrison–Redstone (hereinafter referred to as the Army), has prepared this corrective measures implementation (CMI) work plan for Redstone Arsenal (RSA), Madison County, Alabama, under the management of the U.S. Army Environmental Command. The Mission & Installation Contracting Command has contracted CB&I under Contract Number W91ZLK-09-D-0006 to perform environmental remediation and restoration and program management services at RSA under the Resource Conservation and Recovery Act (RCRA) Corrective Action Program in accordance with RSA's Alabama Hazardous Wastes Management and Minimization Act Hazardous Waste Storage Facility Thermal Treatment, Solid Waste Management Unit Corrective Action Permit Modification No. 6 (last modified on July 6, 2015) (hereinafter referred to as the Permit) (U.S. Environmental Protection Agency [EPA] ID # AL7 210 020 742) (Alabama Department of Environmental Management [ADEM], 2015). This CMI work plan has been developed to provide technical guidance for implementing the corrective measures selected for site RSA-227, Inactive Washrack Adjacent to Building 5492, located within Operable Unit 6.

This CMI work plan incorporates applicable elements of the Permit and the most recent edition of the Alabama Environmental Investigation and Remediation Guidance (AEIRG) (ADEM, 2005). This CMI work plan is submitted to fulfill in part the requirements listed in Section VI.E.1 of the Permit. As specified in Section VI.E.3, a request for permit modification is included as part of this plan. This plan protects human health and the environment from hazardous constituents at concentrations exceeding applicable limits.

1.1 Purpose

The purpose of this CMI work plan is to describe the corrective measures planned to achieve unrestricted reuse of the RSA-227 surface media site. The RSA-227 RCRA facility investigation (RFI) (CB&I, 2015a) defined the nature and extent of contamination, evaluated potential risks to current and future receptors, and concluded that corrective measures are needed for arsenic and polynuclear aromatic hydrocarbon (PAH) contamination in soil before the site can be released for unrestricted reuse.

Groundwater beneath the site (including the saturated zone soils) is included in the RSA-147 groundwater unit. Results of the RSA-227 RFI (CB&I, 2015a) indicated contaminants present in groundwater which will be addressed separately as part of the RSA-147 groundwater unit corrective measures. Potable use of groundwater is currently precluded and nonpotable uses of groundwater are managed as required by the terms of the interim record of decision (IROD) for

installation-wide groundwater (Shaw Environmental, Inc. [Shaw], 2007) and implemented under the RSA Site Access Control (SAC) program (Army, 2012).

The selected corrective measures address potential risks to current site workers and future residential receptors under an unrestricted reuse scenario by excavation and off-site disposal of arsenic- and PAH-contaminated soils at RSA-227. This CMI work plan has been prepared to present the technical approach and rationale for conducting the field activities that will be performed during implementation of the selected remedy. The site description and background, site setting, and environmental description for RSA-227 are presented in Section 1.2.

1.2 RSA-227 Overview

RSA-227 occupies approximately 0.04 acre in the central portion of RSA, north of Mills Road in the maintenance shop complex, adjacent to Building 5492 (Figure 1-1). The site lies above groundwater unit RSA-147, which covers approximately 1,300 acres in the central portion of RSA.

RSA-227 consists of the inactive former concrete washrack and concrete sump on the south side of Building 5492 in a developed and paved area. RSA-227 also consists of maintained grass and gravel areas. A partial chain-link fence is located south of the sump within the site boundary (Figure 1-2). Site drainage is controlled by an unlined drainage ditch to the south of RSA-227. This drainage ditch collects runoff from the northwest of RSA-227 and the east of RSA-227 and directs the combined flow to another drainage ditch that extends south of RSA-227. The drainage ditch located outside the boundary of RSA-227 will be referred to as the Ditch in this plan. Figure 1-2 shows the boundary of RSA-227 and the area of the Ditch. The nearest solid waste management unit (SWMU) is RSA-304, Oil/Water Separator, Washrack and Sump, adjacent to Building 5498, located immediately west-northwest.

Topography across the site is flat, sloping to the southwest. No perennial water features are associated with the site, and site drainage is controlled by an unlined drainage ditch to the south of the site. This drainage ditch collects runoff from the northwest of RSA-227 and the east of RSA-227 and directs the combined flow to the Ditch, which extends south of RSA-227. The entire site lies outside the 100-year floodplain.

The subsurface geologic setting beneath RSA-227 and adjacent sites includes overburden consisting of low- to medium-permeability, dark residual brown, red, reddish-brown, yellowish-red, strong brown clay with fine sands. Intervals of rock and chert and limestone fragments increasing with depth represent residual deposits formed by in situ chemical weathering of chert nodules and layers within the limestone bedrock. Based on information recorded on boring logs,

the thickness of the residual soil (overburden) ranges from approximately 45 to 56 feet and the overburden groundwater ranges from 18 to 39 feet below ground surface (bgs).

According to the RSA Master Plan, the current land use for this site is business. Where practical, the Army has restricted entry into the SWMUs by fencing them and/or placing warning signs at key entry points. RSA-227 is not fenced; however, access to the RSA property as a whole is controlled.

1.3 Document Organization

This CMI work plan is organized into the following chapters:

- ***Chapter 1.0, Introduction,*** presents the purpose and overview of the document and includes a brief site description, including the topography, geology, and hydrogeology associated with the site.
- ***Chapter 2.0, Investigation Results,*** presents additional background information about the project site, including investigation history, the nature and extent of contamination, a fate and transport summary, site risks, and the final site conceptual site model (CSM).
- ***Chapter 3.0, Decision Summary,*** describes the basis for the action, including the corrective measures objectives, the cleanup goals (CG), and a summary of the corrective measures.
- ***Chapter 4.0, Corrective Measures Implementation,*** describes the support and field activities necessary to implement the excavation and disposal of impacted soil media at the site.
- ***Chapter 5.0, Contingencies,*** describes the potential for variances which could arise during execution of the corrective measures described herein.
- ***Chapter 6.0, References,*** provides the references that contributed to the preparation of this CMI work plan.

The following plans and supporting documentation are included as appendices to this CMI work plan:

- Appendix A: Redstone RCRA Permit Modification Request
- Appendix B: CMI Schedule
- Appendix C: Site-Specific Safety and Health Plan
- Appendix D: Construction Quality Assurance Plan (CQAP)
- Appendix E: Data Collection Quality Assurance Plan (DCQAP)
- Appendix F: Best Management Practices (BMP).

2.0 Investigation Results

This chapter presents additional background information about RSA-227, including the investigation history, the nature and extent of contamination, a fate and transport summary, the site risks, and the final CSM.

2.1 Investigation History

Environmental investigations conducted at RSA-227 include the following:

- RSA-147 potential source area (PSA) investigation (Shaw, 2005)
- RSA-227 RCRA facility assessment (ADEM, 2008a)
- RSA-227 RFI (CB&I, 2015a).

Shaw conducted an extensive historical background search of each PSA within the RSA-147 groundwater unit (Shaw, 2005). Following a visual site inspection and limited site inspection sampling in 2004, the abandoned washrack and sump were determined to have potential for materials to be spilled or released during historical activities (Shaw, 2005). Elevated concentrations of arsenic and PAHs were detected in soil on the west side of the building. This PSA was designated as SWMU RSA-227.

ADEM evaluated RSA-227 during a 2008 visual site inspection conducted as part of the RCRA facility assessment (ADEM, 2008a). Based on the findings of the PSA investigation and the high probability of releases from soils to groundwater from the abandoned washrack at RSA-227, ADEM recommended that the site continue with a remedial investigation/feasibility study (ADEM, 2008a, Section 4.2.17).

An RFI was conducted at RSA-227 in several phases from 2011 through 2015 to complete the delineation of arsenic and PAH contamination in soil from historical operations at the site (Shaw, 2011; 2012a,b). RFI activities included advancement of soil borings and installation of monitoring wells with associated sampling of surface soil (defined as 0 to 1 foot bgs), subsurface soil, and groundwater.

The RFI report concluded that the Army's historical operations at RSA-227 resulted in the release of arsenic and several PAHs to soil at concentrations that pose an unacceptable risk to current site workers and a future hypothetical residential receptor, the receptor scenario used to determine if unrestricted reuse of the site is warranted. Arsenic also poses an unacceptable risk for the commercial worker (CB&I, 2015a). The report concluded that action was warranted for

surface media. Accordingly, the Army recommended that corrective measures be implemented for arsenic- and PAH-contaminated soil at the site.

2.2 Nature and Extent of Contamination

The RSA-227 usable data set includes samples for RSA-227 and the Ditch. The RSA-227 data set includes definitive and usable analytical results from 39 surface soil samples, 56 subsurface soil samples, and 13 monitoring well groundwater samples. Soil and groundwater sample analyses included volatile organic compounds (VOC), semivolatile organic compounds (SVOC) (including low-level PAHs), metals, and pesticides/polychlorinated biphenyls (PCB).

The nature and extent of contamination at RSA-227 and the Ditch have been defined and indicate the following:

Metals. The metal arsenic was detected in surface soil at RSA-227 and in the Ditch at concentrations greater than the preliminary screening values (PSV) in samples where arsenic was determined by a site-to-background comparison not to be naturally occurring. These results have been fully delineated. All detected concentrations of metals in groundwater were determined to be naturally occurring except for one detection of cadmium from a sample collected in well 227-RS1871 on July 5, 2012. The two subsequent samples collected in February 2013 and July 2013 from well 227-RS1871 are nondetect for cadmium. As such, cadmium is not considered to be a relevant chemical of concern (COC) for groundwater at this site. All other metals at RSA-227 and in the Ditch were determined to be naturally occurring or were not present at concentrations greater than their associated PSVs.

VOCs. No VOCs present in surface or subsurface soil at RSA-227 or surface soil at the Ditch exceed PSVs or dilution-attenuation factor (DAF) 4 soil screening levels (SSL) for leaching. Two VOCs (1,1-dichloroethene and trichloroethene [TCE]) were detected at concentrations above their PSVs in groundwater samples. 1,1-Dichloroethene was detected at concentrations above the PSV in samples collected from well 227-RS1943 in July 2012, February 2013, and July 2013 and well 227-RS2328 in February 2013 and July 2013. TCE was detected at concentrations above the PSV in samples collected from well 227-RS1871 in February 2013 (a subsequent sample collected in July 2013 was nondetect for TCE) and well 227-RS2045 in July 2013 and below the PSV in a sample collected in February 2013.

Semivolatile Organic Compounds. The only SVOCs detected at RSA-227 and the Ditch were PAHs plus several common laboratory contaminants. Several samples in the vicinity of the washrack and the Ditch had concentrations of PAHs greater than PSVs. RSA-227 results were fully delineated to concentrations below PSVs, while results for PAHs in the Ditch surface soils

were delineated to concentrations below upgradient/background locations. The PAH benzo(a)pyrene was detected in the RSA-227 subsurface soils at two locations at concentrations greater than PSVs. PAHs concentrations did not exceed PSVs in the Ditch subsurface soils.

In groundwater, one SVOC (benzo[a]anthracene) was detected in a sample collected in July 2012 from well 227-RS1870 at a concentration that exceeded the PSV. The July 2012 sample was collected immediately following well installation. The benzo(a)anthracene exceedance was not confirmed in the subsequent July 2013 sample, and no other SVOCs exceeded their PSVs.

Pesticides/Polychlorinated Biphenyls. No pesticides/PCBs present in surface or subsurface soil at RSA-227 or surface soil at the Ditch exceed PSVs or DAF_4 SSLs for leaching. Only one groundwater sample was analyzed for pesticides/PCBs. All pesticide/PCBs were either not detected or detected below their residential PSVs.

Figure 2-1 presents the locations of samples collected containing COCs at concentrations exceeding the CGs. These locations have been fully delineated at the surface.

2.3 Fate and Transport Summary

At RSA-227 and the Ditch, the major potential contaminant migration pathway is the dissolution of site-related chemicals from soil to form leachate and the subsequent transport to the water table resulting from the downward percolation of infiltrating rainfall. Overland transport of soil contaminants by wind or water is unlikely at RSA-227 and the Ditch because the site is relatively level and well vegetated. The distribution of the SVOCs in the Ditch indicates that releases from RSA-304 and RSA-227 are commingled.

No contaminants present in soil pose a threat for ongoing leaching to groundwater at unacceptable levels greater than groundwater PSVs. No organic chemical present was found to be present in both surface and subsurface soils at concentrations greater than associated SSLs. Only the metal selenium was present in surface and subsurface soils at concentrations greater than associated SSLs, and this metal was not detected in groundwater. Runoff from SWMUs adjacent to the ditch feature, including RSA-304 and RSA-227, may pose a migration route from on-site contamination into the ditch.

2.4 Site Risk Summary

An Alabama Risk-Based Corrective Action (ARBCA) evaluation for human health and an ecological risk evaluation were performed for RSA-227 and the Ditch in accordance with the ARBCA guidance manual, Revision 2 (ADEM, 2008b), as part of the RFI (CB&I, 2015a). These evaluations addressed two separate units. RSA-227 itself was defined as one unit (RSA-227) and is represented by samples collected within the RSA-227 boundaries. The second unit (the Ditch)

consists of the drainage ditch south and outside the boundaries of RSA-227. The Ditch was evaluated separately due to the potential contribution of constituents in surface water runoff from RSA-304, which is located upgradient of RSA-227. The complete ARBCA evaluation for human health and the ecological risk evaluation are provided in the RFI report (CB&I, 2015a).

2.4.1 Land and Resource Use

Land use at RSA-227 is designated as business. The current use of RSA-227 and the drainage ditch area is not residential, nor is it expected to be in the future. The residential scenario was included in the ARBCA evaluation in order to determine if this site is eligible for unrestricted reuse in accordance with ADEM requirements. In the Permit, ADEM has specified that investigations must comply with Alabama Environmental Investigation and Remediation Guidance and ARBCA guidance. In order to determine if this site is eligible for unrestricted reuse as defined in Alabama Administrative Code 335-5, risks to a residential site user were assessed.

2.4.2 Human Health ARBCA

The ARBCA human health evaluation consists of a three-tiered process: the preliminary screening level (PSL) evaluation (the first tier), the Risk Management (RM) 1 evaluation (the second tier), and the RM-2 evaluation (the third tier) (ADEM, 2008b). In the case of RSA-227, the RM-1 evaluation was not performed; instead, the evaluation proceeded directly from the PSL evaluation to the cumulative risk assessment in the RM-2 evaluation.

The PSL evaluation consists of a simple comparison of site concentrations with PSVs, which generally were the EPA (2013) regional screening levels (RSL), based on the lower of an individual excess lifetime cancer risk (IELCR) of 1E-6 and a noncancer hazard index (HI) of 0.1. In the case of groundwater, maximum contaminant levels (MCL) are used as the PSVs, if available. Otherwise, tap water RSLs are used. Residential PSVs were selected for the RSA-227 evaluation in order to consider alternatives to attain unrestricted land use.

The PSL evaluation is conducted for all chemicals that are determined to be site related. Inorganics with maximum detected concentrations that do not exceed their background screening values (BSV) or shown in a site-to-background comparison to be naturally occurring are judged not to be site related and are not evaluated further. All other detected chemicals are initially identified as chemicals of potential concern (COPC) and site concentrations are compared to PSVs in the PSL evaluation. A COPC is identified as a COC if the maximum detected concentration is greater than a PSV.

The chemicals identified as COCs in the RSA-227 soil were arsenic, carbazole, and PAHs (benzo[a]anthracene, benzo[a]pyrene, benzo[b]fluoranthene, benzo[k]fluoranthene, dibenzo[a,h]anthracene, and indeno[1,2,3-cd]pyrene). The chemicals identified as COCs in Ditch soil are arsenic, carbazole, and PAHs (benzo[a]anthracene, benzo[a]pyrene, benzo[b]fluoranthene, benzo[k]fluoranthene, dibenzo[a,h]anthracene, and indeno[1,2,3-cd]pyrene). Dimethyl phthalate was identified as a COC in soil only because there was no screening value available for this compound.

Chemicals in the groundwater identified as COCs because their maximum detected concentrations exceed their PSVs were cadmium, benzo(a)anthracene, 1,1-dichloroethene, and TCE. Lead, alpha-chlordane, gamma-chlordane, 1,1,2-trichloroethane, 1,2-dichloroethane, carbon tetrachloride, chloroform, cis-1,2-dichloroethene, tetrachloroethene, toluene, and total xylenes were identified as COCs only because they have MCLs.

The COCs identified in the PSL evaluation were brought forward for evaluation in the cumulative risk assessment (RM-2 evaluation). Receptor scenarios evaluated in the cumulative risk assessment included a commercial worker, a construction worker, and a hypothetical residential receptor. The objective of the cumulative risk assessment is to identify “relevant” COCs. These are COCs that contribute significantly to risk or hazard and that will be carried forward for evaluation in the Corrective Measures Study.

Although RSA’s current mission makes residential site use unlikely, a hypothetical future residential receptor was evaluated as required by ADEM (2008b) to evaluate future use without restrictions and determine whether corrective measures including land-use controls (LUC) are warranted to achieve no-further-action (NFA) status. Groundwater is evaluated as if it were developed as a source of potable water in the future. Risks from exposure to groundwater were assessed even though groundwater use at this site is precluded now and in the future and nonpotable uses are managed because of RSA’s SAC program (Army, 2012) and the terms of the installation-wide groundwater IROD (Shaw, 2007).

The ARBCA guidance considers an IELCR of $1x10^{-5}$ to be the target cumulative risk. The target noncancer hazard is an HI of 1.0. Estimated cumulative risks/hazards at or below these targets do not require additional action.

Cumulative IELCR and HI estimates for all receptor scenarios for RSA-227 and the Ditch are summarized in Tables 2-1 and 2-2, respectively. These totals are based on the contributions from all the COCs carried forward from the PSL evaluation. Table 2-1 shows that for RSA-227 soil exposure alone, and for cumulative soil and groundwater exposure, the IELCR values estimated

for the commercial worker and the hypothetical resident are greater than the ADEM target level of $1x10^{-5}$. The cumulative HI estimates for all receptors for exposure to RSA-227 soil alone fall below the threshold level of 1.0. When groundwater is considered, the HI estimates for all receptors are greater than the ADEM target.

The cumulative IELCR estimates for exposure to the Ditch soil alone (Table 2-2) and for cumulative soil and groundwater exposure are above the ADEM trigger level of $1x10^{-5}$ for the commercial worker and hypothetical resident receptors. The cumulative HI estimates for all receptors for exposure to Ditch soil alone fall below the threshold level of 1.0. When groundwater is considered, the HI estimates for all receptors are greater than the ADEM target.

Table 2-3 summarizes the RM-2 evaluation of human health for RSA-227 and the Ditch and identifies relevant COCs that contribute significantly to cumulative risk (IELCR of 1E-06 or greater; or HI of 0.1 or greater, although cumulative hazards by target organ may be considered). As shown in Table 2-3, for RSA-227 soil, arsenic, benzo(a)pyrene, and dibenz(a,h)anthracene are relevant COCs for the commercial worker. Arsenic and benzo(a)pyrene are relevant COCs in Ditch soil for the commercial worker (Table 2-3). Arsenic, benzo(a)anthracene, benzo(a)pyrene, benzo(b)fluoranthene, dibenz(a,h)anthracene, and indeno(1,2,3-cd)pyrene) are relevant COCs for the hypothetical resident receptor for both RSA-227 and Ditch soil.

Table 2-3 also identifies the relevant COCs for groundwater. The risks associated with TCE exceeded the acceptable limit of $1x10^{-5}$. In addition, groundwater concentrations of TCE are greater than its MCL. While hazards associated with 1,1-dichloroethene do not exceed ADEM's target, it is identified as a relevant COC because it is present at concentrations above the MCL. Benzo(a)anthracene was detected at a concentration of 0.05J micrograms per liter in the July 3, 2012 groundwater sample from well 227-RS1870 (CB&I, 2015a). This concentration was used in the RM-2 evaluation because it was the maximum detected concentration. The resulting IELCR was above ADEM's target risk, and this chemical was identified as a relevant COC in the RFI (CB&I, 2015a). Although no PAHs, including benzo(a)anthracene, were detected in a subsequent sample from this well collected on July 29, 2013 from well 227-RS1870, benzo(a)anthracene is included as a relevant COC in this CMIP, as shown in Table 2-3.

In addition to the ARBCA, a screening-level evaluation of vapor intrusion was conducted to determine whether there has been a release of VOCs to groundwater or soil at RSA-227 that may volatilize and migrate upward to pose an unacceptable risk to occupants of commercial/industrial buildings or a hypothetical residential building. It was concluded that VOCs in soil and groundwater do not represent a source that would pose an unacceptable health threat by the vapor intrusion pathway.

2.5 Screening-Level Ecological Risk Assessment

A screening-level ecological risk assessment (SLERA) was completed for RSA-227 as part of the RFI (CB&I, 2015a). The surface soil data for RSA-227 were compared to their respective BSVs and ecological screening values (ESV). A weight-of-evidence (WOE) evaluation was completed to further evaluate the constituents identified in the initial screening. The WOE evaluation examined a number of lines of evidence in order to draw conclusions as to whether site-related constituents at RSA-227 have the potential to pose hazards to ecological receptors.

The initial comparison of the detected constituent concentrations in RSA-227 surface soil to ESVs and BSVs identified 11 metals (arsenic, barium, cadmium, calcium, copper, lead, magnesium, manganese, mercury, selenium, and zinc), DDT and metabolites, 1,2-dichlorobenzene, total low molecular weight (LMW) PAHs, and total high molecular weight (HMW) PAHs as preliminary chemicals of potential ecological concern (COPEC) that required further evaluation. Two detected SVOCs (carbazole and dibenzofuran) were also considered for further evaluation because they do not have available BSVs or ESVs.

The WOE evaluation concluded that many of the metals detected in the RSA-227 samples were likely to be naturally occurring and that some of the preliminary COPECs were not likely to be related to site activities. Based on the results of the screening evaluation and COPEC refinement, arsenic, copper, lead, selenium, DDT and metabolites, total LMW PAHs, total HMW PAHs, and 1,2-dichlorobenzene in surface soil at RSA-227 required community-level and food chain assessments. Carbazole and dibenzofuran required only a community-level assessment.

Based on the results of the community-level and food chain assessments for RSA-227, it was concluded that sensitive individuals may be adversely affected by concentrations of arsenic, lead, selenium, LMW PAHs, and HMW PAHs but that populations of food chain receptors are unlikely to be impacted. Potential impacts of carbazole, 1,2-dichlorobenzene, and dibenzofuran are uncertain due to lack of relevant screening values. Additionally, it was concluded that RSA-227 is a very small industrial site (0.04 acre) that lacks viable habitat and does not support populations of the species evaluated in the SLERA. Therefore, it was concluded that further evaluation of ecological hazards at RSA-227 is not warranted.

The initial comparison of concentrations in Ditch surface soil to ESVs and BSVs identified 11 metals (arsenic, barium, cadmium, calcium, cobalt, lead, magnesium, manganese, mercury, selenium, and zinc), DDT and metabolites, Aroclor-1260, alpha-chlordane, endrin, endrin aldehyde, endrin ketone, gamma-BHC, gamma-chlordane, total HMW PAHs, and bis(2-ethylhexyl)phthalate as preliminary COPECs that required further evaluation. Two detected

SVOCs (carbazole and dibenzofuran) were considered for further evaluation because of the lack of BSVs or ESVs.

The COPEC refinement process for the Ditch concluded that arsenic, selenium, DDT and metabolites, Aroclor-1260, alpha-chlordane, endrin, endrin aldehyde, endrin ketone, gamma-BHC (Lindane), gamma-chlordane, and total HMW PAHs required community-level and food chain assessments. Carbazole was further evaluated in a community-level evaluation.

The community-level and food chain assessments for the Ditch showed that adverse effects to sensitive individuals may result from exposure to arsenic, selenium, DDT and metabolites, and HMW PAHs but that populations of food chain receptors are unlikely to be adversely affected. Potential impacts of carbazole to plants and of Aroclor-1260 to terrestrial invertebrates are uncertain due to the absence of screening values for these COPECs. Additionally, the Ditch is a very small engineered drainage swale that lacks viable habitat and does not support populations of the species evaluated in the SLERA. It was therefore concluded that further evaluation of ecological hazards at the Ditch is not warranted.

2.6 Final Conceptual Site Model

A CSM was developed for RSA-227 based on historical operations, available site information, and available soil and groundwater data. The most likely site-related contaminants include metals, pesticides/PCBs, SVOCs, and VOCs. Since pesticides/PCBs were included in the CSM, pesticides/PCBs were either not detected or detected below their PSVs in samples collected from well 227-RS1871 in July 2012. Subsequent groundwater samples from this well were not analyzed for pesticides/PCBs.

2.7 Summary

The results of the RFI indicated site-related releases of arsenic and PAHs likely occurred during historical operation of facilities at RSA-227. The nature and extent of contamination at RSA-227 has been characterized, and corrective actions are needed to address surface media at RSA-227 and the Ditch. Further action will be required for groundwater at RSA-227 area once the action for soil is complete. Groundwater action will take place in conjunction with the corrective measures required for the RSA-147 groundwater unit.

3.0 Decision Summary

3.1 Basis for the Action

The RFI (CB&I, 2015a) defined the nature and extent of contamination and evaluated potential risks to current and future receptors. The RFI concluded that exposure to soil within RSA-227 and in the Ditch was found to pose unacceptable risks to commercial workers and future hypothetical residents and that action is required at RSA-227. In the ARBCA RM-2 evaluation, arsenic and certain PAHs in soil were identified as relevant COCs warranting action. Corrective actions are therefore needed to address soil at RSA-227 and the Ditch. Further action will be required for groundwater under RSA-227 once the action for soil is complete. For administrative purposes, separate surface sites and groundwater units have been established at RSA for evaluation and remediation under the RCRA regulatory process, and groundwater is also being evaluated separately under RSA-147.

The Army intends to achieve closure for soils at RSA-227 and the Ditch through the implementation of corrective measures as they are needed to protect human health.

3.1.1 Objectives of the Corrective Measures

Based on the results of the RFI, the corrective measures objective (CMO) for RSA-227 is as follows:

- Reduce exposure of commercial and future residents to soil contaminated with arsenic and PAHs such that background conditions are achieved for arsenic and no unacceptable risk is present for PAHs.

3.1.2 Cleanup Goals for the Corrective Measures

CGs are relevant to alternatives that reduce concentrations, such as excavation and off-site disposal. The EPA National Oil and Hazardous Substances Pollution Contingency Plan (40 Code of Federal Regulations §300.430[3][B] and [C]) identifies $1x10^{-6}$ as a level at or below which cancer risk is considered to be minimal. Levels from $1x10^{-6}$ to $1x10^{-4}$ represent a risk management range within which cancer risks may or may not be subjected to further action. Cancer risk levels above $1x10^{-4}$ are generally considered to be unacceptable and require further action. The Army has adopted the EPA perspective on cancer risk as expressed in the National Contingency Plan. ADEM (2008b), however, considers a total IELCR of $1x10^{-5}$ as the trigger level at which risk-based target levels (RBTL) must be developed to guide site management. The CGs for RSA-227 were calculated in light of the ADEM guidance.

The RFI concluded that arsenic and PAHs in soil at RSA-227 and the Ditch pose an unacceptable hazard to the commercial worker and future residential receptors and developed RBTLs for soil for the hypothetical residential receptor based on target cancer risks of $1x10^{-6}$, $1x10^{-5}$, and $1x10^{-4}$ for arsenic and the PAHs benzo(a)anthracene, benzo(a)pyrene. benzo(b)fluoranthene, dibenz(a,h,)anthracene, and indeno(1,2,3-cd)pyrene (CB&I, 2015a). In the case of arsenic, the RBTLs of $1x10^{-5}$ and $1x10^{-6}$ are lower than the BSV. As a result, the CGs for arsenic are based on the BSVs: 15 milligrams per kilogram (mg/kg) for surface soil and 18 mg/kg for subsurface soil.

The application of the CGs for arsenic in soil includes the consideration of the results of the site-to-background comparison included in Appendix C of the RFI (CB&I, 2015a). The site- to-background comparison consists of two complementary statistical tests, as well as a geochemical evaluation, to determine if site concentrations have a natural source or are elevated due to site-related contamination. The result of this evaluation in some cases is the identification of "anomalous" concentrations, or those that cannot be explained as the result of natural processes. In many cases, a few concentration results somewhat above the BSVs are identified as most likely natural, thereby supporting a recommendation that further evaluation is not warranted. Arsenic concentrations that must be addressed by the corrective measures are those that are above the CG and identified as "anomalous". Seven surface soil locations at RSA-227 exhibited arsenic concentrations greater than the CG (Figure 2-1) and were identified by the site-to-background comparison in the RFI (CB&I, 2015a) as anomalous (Figure 2-1).

In alternatives that include removal of soil with "anomalous" concentrations of arsenic, confirmation samples with results over the CG will be evaluated in a site-to-background comparison to determine if these results are most likely natural and further corrective measures are not required or if additional corrective measures are necessary.

The CGs for the PAHs are based on future residential use of the site. EPA (1993) developed toxicity equivalency factors that relate the toxicity of all carcinogenic PAHs to that of benzo(a)pyrene so that cancer risk and CGs for the PAHs can be expressed as benzo(a)pyrene equivalents. The CGs for site PAHs were calculated using benzo(a)pyrene equivalents and a cumulative target cancer risk for hypothetical resident receptors of $1x10^{-5}$ (ADEM, 2008b), as presented in Table 3-1. This value is calculated using the representative concentrations and risk estimates for RSA-227 provided in the RFI report (CB&I, 2015a) but are also applicable to the Ditch. A summary of the soil CGs for RSA-227 is provided in Table 3-2.

Concentrations of the five PAH COCs for residential use (benzo[a]anthracene, benzo[a]pyrene, benzo[b]fluoranthene, dibenz[a,h]anthracene, and indeno[1,2,3-cd]pyrene) in confirmatory soil

samples will be used to develop the benzo(a)pyrene equivalent concentration to demonstrate compliance. For samples in which one of these compounds is not detected, the sample-specific detection limit (DL) will be used as the surrogate value (as adjusted for equivalent concentrations) in the summation. The CG will be met as long as the benzo(a)pyrene equivalent concentration is less than or equal to the CG. The CG will also be considered to be met if none of the PAH COCs are detected in a given sample.

The following table shows the relative potency of each of these PAHs. The relative potency values will be used to derive the equivalent concentrations for determining compliance with the CG.

Chemical of Concern	Relative Potency*
PAHs	
Benzo(a)anthracene	0.1
Benzo(a)pyrene	1
Benzo(b)fluoranthene	0.1
Dibenz(a,h)anthracene	1
Indeno(1,2,3-cd)pyrene	0.1

*From EPA (1993).

An evaluation of the benzo(a)pyrene equivalent concentration compared to the CG for the site data is presented as Table 3-3.

3.1.3 Need for Corrective Measures

The RFI conducted at RSA-227 defined the nature and extent of contamination and recommended corrective measures. Analytical results indicate that historical activities have led to localized contamination of arsenic and several PAHs in surface and subsurface soils. The risk assessment indicates that the RSA-227 site poses an unacceptable risk to human health. Corrective measures are needed to protect human health and will also protect ecological receptors.

3.1.4 Scope and Role of Operable Unit or Response Action

This section includes the scope and role of the response action for RSA-227, the scope of the problems addressed by the response action for RSA-227, and a discussion of the relationship of the response action at the site to the response action at other operable units.

3.1.4.1 Overall Remedial Strategy for Redstone Arsenal and RSA-227

The overall remedial strategy for RSA is discussed in this section. Soils at RSA-227 and the Ditch were not found to pose a threat to groundwater from the soil-to-groundwater migration

pathway. The cleanup planned for RSA-227 addresses risks from exposure to arsenic and PAHs in soil to site receptors through direct or indirect contact with soil only.

Overall, the environmental concerns at RSA are extremely complex. Work is underway at over 200 sites in the Installation Restoration Program at RSA. To ensure protection from exposure to potentially contaminated groundwater under these sites and elsewhere on RSA, a groundwater IROD has been approved for installation-wide groundwater LUCs (Shaw, 2007; 2009a). This IROD selected LUCs as the interim remedy for groundwater. LUCs have been implemented to prevent potable use of groundwater and manage nonpotable uses such that exposure to contaminated groundwater is minimized (Shaw, 2009b). This interim remedy will remain in place for the groundwater until a final remedy has been selected for the RSA-147 groundwater unit. These LUCs are implemented through the Army-regulated SAC program which is currently in place to control access to the RCRA sites at RSA. This program prevents inadvertent exposure to contamination in the interim until remediation, as required, is accomplished (Army, 2012). Via the SAC program, the installation of wells for drinking water is prevented, and all requests for the installation of wells for industrial processes or agricultural purposes on RSA are subject to Army review and approval. This program prevents the potable use of groundwater and manages nonpotable uses of groundwater.

The overall strategy for cleanup at RSA has been presented to the regulators in two cleanup strategy documents, the *Installation-Wide Groundwater Cleanup Strategy* (Shaw, 2009b) and the *Installation-Wide Strategy for Cleanup of Impacted Wetlands* (Shaw, 2010). The overall RSA cleanup strategy includes the following elements:

- Expedite evaluation and release of surface media sites to allow for efficient, mission-related property reuse.
- Expedite cleanup of source areas at surface media sites and secondary sources of ongoing groundwater contamination, including dense nonaqueous-phase liquid.
- Prevent exposures to surface media and groundwater that may result in unacceptable risks through the use of the Army's SAC program and implementation of the groundwater LUCs selected in RSA's groundwater IROD.
- Coordinate the evaluation of groundwater units and their associated surface sites so that approval of groundwater RFIs is not delayed by unresolved surface media site issues.
- Design and implement an installation-wide monitoring network to monitor remedial progress and ensure that the selected remedies are protective of human health and the environment on a long-term basis.

The corrective measures for RSA-227 and the Ditch are related to this strategy since the corrective measures will provide protection of human receptors and the environment from arsenic- and PAH-contaminated soils. The corrective measures will also support the Army and the federal government overall in reducing future short-term and long-term financial liabilities associated with managing this site. In the short term, site-related costs for managing this site under RSA's SAC program will be reduced after the site is released for unrestricted reuse. The Army intends to clean up RSA-227 such that unrestricted reuse will be allowed for surface media at this site.

3.1.4.2 Scope of Problems Addressed by RSA-227 Corrective Measures

The action or scope covered by the corrective measure at RSA-227 surface media will address contamination in soil that poses direct contact risks to the commercial worker and hypothetical future residential receptors and will also address potential impacts to ecological receptors. The corrective measure conducted at RSA-227 is intended by the Army to be the final action for surface media.

3.2 Selected Corrective Measures

3.2.1 Soil Excavation and Off-Site Disposal

The Army has selected a corrective measure consisting of excavation and off-site disposal of arsenic- and PAH-contaminated soils for RSA-227.

3.2.2 Summary of the Corrective Measure Alternatives Evaluation

The following information summarizes the evaluation of alternatives and the selection of the corrective measures for RSA-227. The following alternatives were considered during this evaluation:

- No Action
- Excavation and Off-Site Disposal
- Waste Consolidation, Cover, and Land-Use Controls.

The following corrective measures were selected based on the evaluation:

- Excavation and Off-Site Disposal.

Excavation and off-site disposal was selected for the following reasons:

- Full removal of arsenic- and PAH-contaminated soil will result in site closure with no future LUCs or long-term monitoring and maintenance, ultimately eliminating the Army's financial liability at the site.

- The overall cost of excavation and off-site disposal is less than the overall cost of closure in place with land-use and storm water controls.

3.3 Extent of Contaminated Soil

Surface and subsurface soil sampling during the RFI identified areas where arsenic exceeded the CGs. Figure 2-1 illustrates the locations where arsenic exceeded the CGs. Based on the RFI data, approximately 1,400 square feet (approximately 110 bank cubic yards) of surface and subsurface soil from five areas will be removed, stockpiled, and characterized for waste disposal. These areas include the concrete washrack, concrete sump and three areas with arsenic and polynuclear aromatic hydrocarbon-contaminated soils. Removal of the existing concrete washrack and associated concrete sump will be performed as a precautionary measure to eliminate the threat of potential contamination from future use. Each individual soil location will be excavated to 1 foot below the contaminated interval. Chapter 4.0 provides details on the activities necessary to complete the excavation and off-site disposal.

3.4 Request for Permit Modification

Appendix A includes a copy of the ADEM approval letter for the RFI report. The request for permit modification accompanies this CMI work plan and presents the supporting information, including all procedures necessary to implement and monitor the final corrective measures for RSA-227 in accordance with Alabama Administrative Code (AAC) R.335-14-8-.04 (2). The inclusion of this request for permit modification meets requirements specified in Section VI.E.3 of the Permit.

4.0 Corrective Measures Implementation

This chapter provides an overview of the field activities planned to complete corrective measures at RSA-227. Work presented in this chapter will be completed in accordance with the procedures outlined in this CMI work plan and other approved documentation, as appropriate.

4.1 General Scope

The general scope of work for RSA-227 activities is expected to include the following:

- Mobilization/demobilization
- Utility clearance and marking
- Construction of erosion controls
- Surveying and marking of the proposed excavation areas
- Removal of the concrete washrack/sump and disposal of concrete and debris
- Excavation of contaminated soil
- Confirmation sampling and analysis of the excavated area
- Waste characterization sampling
- Transport and disposal of excavated arsenic and PAH-contaminated soils as nonhazardous waste (Subtitle D landfill)
- Site restoration, including application of backfill and topsoil, and revegetation with approved grass mixtures.

The general schedule for implementation of corrective measures at RSA-227 is provided in Appendix B. The schedule is approximate. The actual dates of implementation will depend on document review time, coordination with other sites, and field conditions encountered during the excavation and disposal activities.

Communication and coordination during the CMI will follow the guidelines provided in the project management plan for Task Order 0008 (Shaw, 2012c) for the Army and its contractors, the installation-wide quality assurance program plan (Shaw, 2013a) for the Army and ADEM, and RSA's community involvement plan (CB&I, 2015b) for the Army and the public. In accordance with the RCRA permitting process, public involvement will occur at least twice, including a public notice to be issued by the Army during the CMI work plan finalization process and in accordance with ADEM's permit modification notification.

4.1.1 Procurement and Subcontracting

The following subcontracted services and imported materials may be required for the completion of the project:

- Analytical laboratory
- Transportation and disposal of contaminated soil
- Surveying
- General fill
- Topsoil
- Erosion controls
- Seed and mulch
- Heavy-duty plastic sheeting.

The following equipment may be utilized to complete field remediation activities by subcontractors:

- Excavator/backhoe to excavate contaminated soil
- Front-end loader to consolidate soil and move fill material
- Wheel loader to manage waste and move import fill material
- Large-capacity water truck (or equivalent) for site dust control and hydration of import material for compaction, taking care not to oversaturate the ground
- Portable fuel tank (mounted on pickup truck).

Support equipment and materials will be procured through equipment and scientific supply vendors and shipped directly to the site. Support equipment includes portable storage, radios, relief stations, eyewash stations, sampling supplies and equipment, health and safety supplies and equipment (e.g., personal protective equipment, air monitoring equipment [e.g., dust monitor and photoionization detector]), and other miscellaneous supplies (e.g., wooden stakes, pin flags, and construction fencing materials).

The copiers and fax machine at Building 7471 will also be used to support the work at RSA-227.

4.1.2 Field Personnel

The following field personnel will likely be utilized to complete field remediation activities:

- One site supervisor
- One site safety officer
- One project business administrator
- One field construction quality control system manager
- One or two equipment operators

- Two laborers.

The number and schedule of personnel will be adjusted during the project as required for completion.

4.2 Preliminary Activities

Preliminary activities include mobilization, requirements for base access, digging permits, utility marking, surveying, and protection of existing site features. All field personnel will follow this work plan and abide by the health and safety requirements presented in the site-specific safety and health plan (Appendix C).

4.2.1 Mobilization

Upon notice to proceed, the corrective measures contractor will begin mobilization, including the deployment of personnel, equipment, subcontractors, and materials necessary to commence CMI activities at RSA-227. Activities will include the procurement of rented items and assembling and packing of equipment and supplies for ground transportation to the site. After field mobilization, the corrective measures contractor's personnel will attend a preconstruction meeting and safety orientation to review the proposed approach and the sequencing of work to ensure that clear lines of communication are established. All necessary site-specific safety training will be conducted at this time.

4.2.2 Access to Redstone Arsenal

Access to RSA requires registering at either Gate 1 (Martin Road east) or at Gate 9 on Rideout Road. Badge requests for access to RSA should be submitted at least two weeks ahead of the date needed to allow for approval and processing by the RSA host organization. New personnel and subcontractor personnel will register at the RSA Visitor's Center at either Gate 1 or Gate 9. Personnel with prior approval from a host RSA organization will be issued a personnel badge upon presentation of proper identification (valid driver's license, vehicle Registration, and proof of insurance). All personnel requesting access to RSA must be a US citizen in good standing (i.e., no convictions or outstanding warrants).

Military and government personnel will present current military (active, retired, or family) or federal government identification cards and do not require a host RSA organization. Further information may be obtained by contacting the Redstone Arsenal Visitors Center located at Gate 9 at (256) 876-1122 or the Vehicle Registration Office at (256) 876-5770.

Registered personnel may access RSA-227 using Gate 1 at Martin Road. Gate 1 is open five days a week (Monday thru Friday) from 0600 to 1600 (car lane open until 2100). Directions from Gate 1 at Martin Road to RSA-227 are west along Martin Road, left (south) on Mills Road, and

left on local road (just past Fowler Road). Gate hours and conditions are subject to change; therefore, operational hours should be verified.

4.2.3 Locating, Marking, and Surveying of Excavation

A licensed land surveyor will be subcontracted to delineate the project work boundary and mark the excavation areas. The surveyor will locate these areas based on coordinates to be shown on a figure/drawing and marked in the field with highly visible wooden stakes, tape, or pin flags. Surveying methods will follow the procedures specified in the CQAP provided as Appendix D. The proposed excavation areas are shown on Figure 4-1.

4.2.4 Digging Permit and Utility Markout

Prior to conducting any intrusive site activities, the corrective measures contractor will coordinate with the appropriate RSA personnel to ensure that any underground utilities in the proposed excavation areas at RSA-227 are located and marked.

The known permitting required during CMI activities is a digging permit for excavation on RSA administered by the Directorate of Public Works. As part this permit, RSA will locate and mark underground utilities in the vicinity of excavation. The procedure requires notification by telephone ([256] 876-9881) within 14 days of intrusive activities requesting a work order for a digging permit.

The digging permit must be renewed every 30 days. To avoid temporary shutdown, CB&I will make a request for permit extension at least 1½ weeks prior to digging permit expiration for the extension to be granted.

Before any excavation can be started, an Excavation Permit (CMS-710-02-FM-01601) must be completed by the responsible superintendent with input from the Authorized Person for underground testing (utility identification) and Excavation Competent Person. Appropriate client approval is also necessary where required by client regulations. Client and/or utility company representatives shall be notified 24 hours prior to beginning excavations.

4.2.5 Site Control

The corrective measures contractor will use the existing fence, temporary construction fencing materials, barricades, and warning tape, as necessary, to delineate the site exclusion zone, contamination reduction zone, and site support zone in compliance with the site-specific safety and health plan (Appendix C). Warning signs will be posted at conspicuous locations around the perimeter of the construction areas to discourage unauthorized entry.

Sections of the RSA-227 southern boundary chain-link fence will be removed during the corrective measures. Temporary fencing panels or barriers approved by the Army will be installed to provide site security during implementation of the corrective measures (Figure 4-2). The permanent chain-link fence will be reinstalled during site restoration.

4.2.6 Storm Water, Erosion, and Sediment Controls

Storm water management and erosion and sediment control will be provided in accordance with the *Alabama Handbook for Erosion Control, Sediment Control and Stormwater Management on Construction Sites and Urban Areas* (Alabama Soil and Water Conservation Committee [ASWCC], 2014).

BMPs (surface stabilization, runoff conveyance, sediment control, stormwater management, etc.) will be used to divert clean water away from a disturbed site, minimize erosion and sedimentation, and prevent pollution of water and land at the sites. Installation of temporary controls will be coordinated to maintain effective and continuous control of erosion and pollution. The primary erosion control techniques will be silt fencing and hay bales. Approximate locations of BMPs are shown on Figure 4-2. Erosion control devices will be inspected weekly and also within 72 hours of any qualifying precipitation event (any precipitation of 0.75 inch or greater in any 24-hour period). Sediment deposits will be manually removed from the silt fence after each qualifying rainfall event or when sediment reaches one-half of the barrier height. Removed sediment will be added to the contaminated soil for subsequent disposal. Damaged erosion control devices and damaged areas around and beneath the devices will immediately be repaired. Upon completion of the project, erosion and sedimentation control devices will be removed. Appendix F provides details on the BMPs that will be used during implementation of the corrective measures.

4.2.7 Well Closure

No monitoring wells are located within the excavation area. Care will be taken to protect nearby monitoring wells during fieldwork. Consequently, no well closure will be performed during the corrective action.

4.2.8 Daily Reports

The requirements for preparation and submittal of daily project documentation are outlined in the CQAP (Appendix D). As indicated in the CQAP, the daily reports (including daily construction logs, etc.) will be provided to the Project Manager or designee during CMI activities. The report will include a running inventory of excavated material.

4.3 Stockpile Work Area

A stockpile work area will be established at RSA-227. Up to 200 cubic yards may be included in a stockpile, although the excavation at this site is expected to generate only approximately 110 bank cubic yards (140 loose cubic yards). The work area will be of sufficient size to hold approximately a minimum of one 200-cubic yard stockpile. Proposed locations of the stockpiles are shown on Figure 4-2. The excavated material will be brought from the excavation and placed in the stockpile work area for waste disposal sampling. The work area will be lined with impervious material such as heavy plastic sheeting and surrounded by a 1-foot-high berm to prevent runoff water and soil migration. The excavated material will be covered with waterproof material (i.e., tarpaulin or 10-mil plastic sheeting). Containment should control volatilization, runoff, leaching, or fugitive dust emissions. Measures shall be taken to prevent any surface runoff from entering into or washing away from the stockpile.

4.4 Washrack and Sump Removal

The estimated limits of removal for the concrete washrack and associated concrete sump are shown on Figure 4-1. The corrective measures contractor will remove any residual materials (i.e., waste solids, water) from inside the concrete sump using a backhoe or vacuum truck, depending on the water content of the waste as determined in the field. Previous sampling results will be used to determine waste characterization. Any additional sampling required by the disposal facility will be performed prior to removal of contents from the sump. Based on the results from previous sampling (sediment and water) of waste material in the sump (Tables 2-1 and 2-2 of the RFI report [CB&I, 2015a]), the sump contents and concrete may be disposed of as non-hazardous waste.

Following disposal of the existing contents of the sump (water and waste solids), the concrete sump and concrete washrack floor will be removed for off-site disposal. Removed concrete will be segregated from excavated soil. Concrete that is encountered during the excavation/removal activities will be cleaned of excess soil and broken up into chunks of manageable size. Excess soil will be disposed along with soil from the excavation. The concrete will be transported to the designated RSA location for recycling, disposed at RSA construction and demolition landfill, or disposed at an appropriately permitted off-site disposal facility

The estimated surface areas of the concrete washrack and concrete sump are approximately 375 and 200 square feet, respectively. The thickness of the concrete pad is unknown. The estimated total volume of material to be removed from the concrete washrack/sump is approximately 52 bank cubic yards, assuming depths of 1 foot and 5 feet for the concrete washrack and concrete sump, respectively.

4.5 Soil Excavation

With the exception of the concrete washrack and associated concrete sump, the excavations/removals will encompass the sample locations identified exceeding the following CGs for arsenic and PAHs in soil:

COC	Residential Surface Soil CG (mg/kg)	Residential Subsurface Soil CG (mg/kg)
Arsenic	15	18
Benzo(a)pyrene Equivalents[1]	0.62	0.62

[1]Values shown for benzo(a)pyrene equivalents apply to the sum of the result for the PAH COCs as adjusted based on chemical-specific toxicity equivalence factors presented in Section 3.1.2.

Five areas located at RSA-227 are proposed for excavation/removal. Figure 4-1 shows these areas, designated as Areas A through E, along with the sample locations where the CGs for arsenic and/or PAHs were exceeded. Removal and off-site disposal of the concrete pad associated with the former washrack (Area A) and the associated concrete sump with metal grate (Area B) will be performed to prevent possible future use. Three areas identified with arsenic and/or PAHs in soil at concentrations greater than the CGs will undergo soil removal (excavation) and off-site disposal. The thickness of the concrete washrack (Area A) is expected to be 1 foot bgs. The depth for Area B (the former sump) is anticipated to extend to 5 feet bgs based on the depth of the bottom of the sump. Based on previous soil sampling results, the depths of the excavations for Areas C, D, and E will be 2 feet bgs. Table 4-1 summarizes the areas and depths of the proposed removals. The estimated volume of soil to be removed/excavated is estimated to be approximately 110 bank cubic yards, yielding approximately 140 loose cubic yards for transportation and disposal. The limits of the soil excavation areas are depicted on Figure 4-1.

Excavation will be accomplished according to the Safety and Health Regulations for Excavations (Occupational Safety and Health Administration [OSHA] 29 Code of Federal Regulations Part 1926 Subpart P). Excavations over 4 feet deep shall be shored, sloped (1 ½:1, horizontal:vertical) or benched as required. Spoils must be placed a minimum of 3 feet from the edge of the excavation. Loose soil or rocks shall be removed from the sides of excavation walls. Personnel shall not enter any excavation over 4 feet deep. All excavated areas will be adequately secured from the public and filled as soon as possible.

At least 3 feet of clearance between any underground utility and the cutting edge or point of powered excavation equipment will be maintained until the precise location of the utility is determined. Initial excavation within this 3-foot area will be conducted manually. When the excavation areas have been cleared and the excavation limits have been demarcated, the

corrective measures contractor will begin excavating from the designated areas using a backhoe or excavator. The corrective measures contractor will excavate to the proposed depths shown in Table 4-1.

Excavation below the level of the base or footing of any foundation shall not be done unless a support system is provided to ensure the safety of employees and the stability of the structure or a registered professional engineer has determined that the structure is sufficiently removed from the excavation that it will be unaffected by the activity. Excavations adjacent to footings should not be excavated within a 1:1 (horizontal to vertical) downward projection from adjacent footings ("footing influence zone") to avoid potential undermining without approval from a registered professional engineer. Building 5492 is the only structure near the corrective action, and removal of the washrack (adjacent to Building 5492) is not expected to extend below the building's footing.

Additional precautions may be taken for worker protection (e.g., trench box) for potential hazards that may not be fully addressed by the OSHA standards.

Concrete rubble that is encountered during the excavation activities will be cleaned of excess soil and broken up into chunks of manageable size. Excess soil will be disposed along with soil from the removal. The concrete will be transported to the designated RSA location for recycling, disposed at RSA construction and demolition landfill, or disposed at an appropriately permitted off-site disposal facility.

If necessary, dust at the site will be controlled with water using a water truck with hose and sprayers and mulch such as straw. The corrective measures contractor will apply water to dry exposed areas until the surface is wet and repeat as needed. Water will be applied at rates that prevent runoff. The corrective measures contractor will not use polymers, tackifiers, stabilizers, or chlorides for dust control. Dust suppression will commence when aerosol levels in the work area or directly downwind reach 2.5 milligrams per cubic meter. This level is one-half the Occupational Safety and Health Administration threshold value for particulates not otherwise regulated (respirable fraction). Measurements will be collected during CMI using a Data Ram PDR 1000 or equivalent real-time aerosol monitor.

4.6 Confirmation Sampling

Following completion of the proposed excavations, confirmation soil samples will be collected within the RSA-227 proposed excavation areas to ensure that the soil contaminant concentrations do not exceed the CGs for PAHs or arsenic unless results are found by a site-to-background comparison to be naturally occurring. The confirmation sampling design is statistically based and

follows the guidelines set forth in (1) Section 9.6 of ADEM *General Soil Sample Collection Standard Operating Procedure (SOP) #2150, Rev. 1.1* (ADEM, 2010a); (2) the August 13, 2010 guidance from ADEM, *In-situ Sampling for the Purposes of Waste Characterization/Disposal of Soil* (ADEM, 2010b); and (3) Pacific Northwest National Laboratory (2012) *Visual Sample Plan*.

The confirmation sample locations are shown on Figure 4-3. Composite confirmation samples will be collected by stainless-steel spoon and placed in a stainless-steel bowl. Debris such as grass, roots, or gravel will be removed, and the soil will be thoroughly mixed (homogenized) and placed in the appropriate sample containers in accordance with Standard Operating Project Procedure (SOPP) Nos. 2.0, 5.0, 6.0, and 24.0. Sample collection logs will be filled out to document the sampling in accordance with SOPP No. 1.0.

Composite confirmation samples will also be collected from the floors of the excavations (Figure 4-3). At a minimum, one confirmation sample will be collected from each excavation wall and floor, resulting in a total of five confirmation samples per excavation area. Confirmation samples will be sent to an off-site analytical laboratory for target analyte list (TAL) metals and PAH analyses on a 5-day turnaround basis. Confirmation samples will be collected in accordance with the DCQAP provided as Appendix E.

If floor confirmation sample results at the excavations do not achieve the CGs, the excavation will be expanded downward. Any downward extension of the excavation area will proceed in 1-foot increments (minimum) from the original depth for remediation until CGs are met or until groundwater is encountered. The average depth to groundwater is approximately 26 feet bgs (CB&I, 2015a). The excavation will go no deeper than the depth groundwater is encountered. If the sidewall confirmation samples do not achieve the CG, they will be expanded out a minimum of one bucket width and resampled. The overexcavation process will continue until the CGs have been achieved or until further expansion of the excavation would threaten the stability of adjacent features such as buildings, roadways, etc.

Sample designations are shown in Worksheet No. 18 of Appendix E.

Confirmation samples will be collected on each sidewall at a maximum spacing of 50 feet between samples. Each confirmation sample will represent a maximum sidewall area of 250 square feet. The points will include a center point of the sidewall section plus aliquots from the upper and lower left and right quadrants of the sidewall section (Figure 4-4). A minimum of one floor confirmation sample will be collected per 2,500 square feet of floor area. The multipoint sample will include a center point of the 50- by 50-foot floor section plus aliquots from the north,

south, east, and west quadrants of the floor area. Figure 4-5 presents the excavation floor confirmation sampling approach.

If confirmation sample results do not achieve the CG, the excavation will be expanded downward and/or outward. Any downward extension of the excavation area will proceed in 1-foot increments (minimum) from the original depth for remediation. If the sidewall confirmation samples do not achieve the CG, they will be expanded out a minimum of one bucket width and resampled. Aliquots from deeper excavations (greater than 4 feet in depth) will be collected from an excavator bucket.

Confirmation samples will be collected using routine quality assurance/quality control sample frequencies (i.e., 10 percent field duplicates, 5 percent matrix spike/matrix spike duplicate). All sample containers, preservatives, and holding times will conform to the requirements specified in the DCQAP (Appendix E).

All analytical data generated from this project will be managed in accordance with the procedures specified in the DCQAP, except only the final confirmation sample results will be validated. Sample documentation, custody, packaging, and shipping will follow the procedures specified in the DCQAP. Custody will be maintained at all times by the corrective measures contractor's sampling team prior to shipment to the analytical laboratory using typical chain-of-custody forms.

4.7 Remediation-Derived Waste/Investigation-Derived Waste Management

Other remediation-derived waste (RDW) generated during the CMI activities at RSA-227 is expected to include decontamination fluids and disposable personal protective equipment (PPE).

AAC 335-14-3-.01(2) allows the use of generator knowledge in the hazardous waste determination process. Generator knowledge consists of an evaluation of the following four factors:

1. ***Process Knowledge*** – The site processes are evaluated to determine if any activity might have generated a listed waste which still persists in soil or groundwater.

2. ***Past Investigation-Derived Waste Management Practices*** – Investigation-derived waste (IDW) has been managed at RSA for over 20 years. Changes to regulations directing this management have been minor. The Army intends to follow management practices which have been accepted by ADEM during prior investigations.

3. ***Sampling Results from Past Waste Characterization Sampling*** – Historical waste characterization sampling may indicate whether future IDW is likely to be a nonhazardous waste or to have characteristics of a hazardous waste.

4. ***Sampling Results from Past Soil and Groundwater Sampling*** – Historical sampling results from soil and groundwater sampling may indicate whether future IDW is likely to be a nonhazardous waste or to have characteristics of a hazardous waste.

It is assumed, based on previous sampling results, that excavated soil will pass the arsenic toxicity characteristic leaching procedure (TCLP) limit of 5 milligrams per liter. Consequently, arsenic and PAH-contaminated soil will be managed as a nonhazardous waste until deemed otherwise by waste characterization sampling.

Solid RDW, liquid RDW, and PPE are examples of RDW that will be managed. All RDW will be containerized, labeled, and stored in compliance with the provisions of AAC 335-14, as applicable, and as discussed in the AEIRG (ADEM, 2005). PPE that is contaminated by site media will be disposed of with the contaminated waste stream (i.e., PPE generated during soil excavation will be disposed of at a Subtitle D landfill). PPE that is uncontaminated will be placed in trash bags and disposed of in a dumpster at the corrective measures contractor's field office as normal household trash. Other types of RDW, if generated, will be managed in accordance with Table 2 of Appendix G of the AEIRG (ADEM, 2005).

For RDW considered to be nonhazardous using generator knowledge and field observations, soil cuttings and liquid waste will be containerized and stored on site pending sampling and analysis. Analytical testing and subsequent evaluations will be performed to determine if soil may be disposed off site at a Subtitle D landfill. Sampling and analysis of RDW are discussed in Appendix E.

In the event that any soil IDW is determined to be hazardous, contingency actions will be taken to manage and dispose of the waste as specified in SOPP No. 4.0, *Investigation Derived Waste*. IDW believed to be hazardous will be containerized in 55-gallon drums or other suitable containers with tight-fitting lids or other covers. Presumed hazardous IDW will be labeled, moved to a satellite accumulation area or 90-day storage within 72 hours, or managed on site in a 90-day storage area, as specified in SOPP No. 4.0. IDW will be disposed of as specified in SOPP No. 4.0, *Investigation Derived Waste*.

A RCRA hazardous waste determination/evaluation is required by AAC 335-14-3-.01(2) and will be made utilizing waste identification criteria outlined in AAC R. 335-14-2-.01 through 335-14-2-.04. Analytical results from soil and groundwater IDW samples will be used to

document if the waste is hazardous or nonhazardous and, for nonhazardous IDW, to determine the contaminant concentrations for disposal purposes. Types of analyses are site specific but typically include TCLP VOCs, TCLP SVOCs, and TCLP metals. Waste for which TCLP results exceed limits specified at AAC 335-14-2-.03, Table 1, will be treated and disposed of as a hazardous waste.

Examples of nonhazardous soil RDW disposal practices for RSA-227 include soil disposal (arsenic) at a Subtitle D landfill. For nonhazardous water RDW, possible management options include processing through RSA's sewage treatment plant or an appropriate RCRA-permitted facility. Examples of disposal practices for hazardous waste include disposal of solid (soil) hazardous waste in a landfill permitted to accept the waste based on the specific contaminants and concentrations in the soil, and treatment of the RDW hazardous liquids will be in accordance with ADEM regulations and the disposal facility permit. When a Subtitle D landfill is selected for RDW disposal, RSA will contact the EPA Region 4 off-site coordinator to ensure that the facility selected for soil disposal does not have any operational or regulatory issues. In the event the selected disposal facility is located outside the Region 4 boundary, notification will be made to the off-site coordinator for the EPA Region where the disposal facility is located.

4.8 Waste Characterization

Sump contents will be disposed based on previous sampling results for the waste contents sampling results (Tables 2-1 and 2-2 of the RSA-227 RFI report [CB&I, 2015a]). Based on these results, the sump, sump contents, and concrete may be disposed of as non-hazardous waste. Any additional sampling required by the disposal facility will be performed prior to removal of contents from the sump.

Contaminated soils and concrete will be segregated and stockpiled separately during the excavation at RSA-227. Excess dirt will be removed from concrete, and concrete/debris will be stockpiled apart from excavated soil. Up to 200 cubic yards may be included in a stockpile, although the excavation at this site is expected to generate only about 110 bank cubic yards (140 loose cubic yards). The stockpiles will be divided into individual 200-cubic yard volumes (or less).

Waste disposal samples will not be collected from concrete. However, grab samples will be randomly retrieved from three exterior points of each soil pile from a depth between 0 and 2 feet. Two additional samples will be taken from the interior of the soil pile at a depth between 2 and 5 feet. The grab samples from the five points within each decision unit will be composited. Each of these composite waste characterization samples, representing 200 cubic yards, will be sent to an

off-site analytical laboratory for TCLP arsenic analysis on a 5-day turnaround basis. Soil stockpile samples will be collected in accordance with the DCQAP provided as Appendix E.

TCLP arsenic data will be needed for landfill acceptance requirements for disposal of soil. No additional quality assurance/quality control samples (other than the method-required batch quality control) will be required for the waste characterization samples.

Upon receipt of the analytical data, the waste characterization sample results will be compared to the regulatory levels for TCLP arsenic. Based upon previous sampling results, the arsenic and PAH-contaminated soils at RSA are not expected to be characteristically hazardous. No known source of contamination involving a process and/or chemical triggering a listed waste code designation has been identified in the waste soils process of generation. Therefore, it is expected that the arsenic and PAH-contaminated soils at RSA-227 will be managed as a nonhazardous waste and disposed of in a Subtitle D landfill.

4.9 Waste Soil Transportation and Disposal

The corrective measures contractor will use a licensed transportation and disposal subcontractor to complete these activities. It is anticipated that the arsenic and PAH-contaminated soil will be disposed of as waste (nonhazardous) at a Subtitle D landfill. Transportation and disposal of the excavated waste will begin after approval by ADEM (typically 4 to 6 weeks after receipt of the solid waste profile sheet) and the selected waste disposal facility. Prior to transport, an RSA representative will review and sign the waste manifest. RSA will be provided 3 working days, minimum for review of documentation for shipping waste.

During loading activities, the corrective measures contractor will document the quantities of waste loaded onto the dump truck and facilitate the bill of lading or shipping paper documentation for the nonhazardous waste shipments. Any waste determined to be hazardous waste must be on a hazardous waste manifest and have a Land Disposal Restriction notification prior to being sent off site for disposal. Transportation will comply with all U.S. Department of Transportation regulations. The corrective measures contractor will coordinate with the transporters so that the waste will be shipped to arrive on schedule at the landfill. The corrective measures contractor will receive written approval from the landfill (and ADEM) prior to shipping waste to their facility. Subtitle D disposal facilities are not required to provide a certificate of disposal. However, the corrective measures contractor will obtain a signed manifest ensuring that the waste was received by the disposal facility. A certificate of disposal, recycling, or destruction will be obtained for all hazardous waste shipped and processed off-site.

4.10 Post-Excavation Activities

4.10.1 Backfilling and Site Restoration

Upon completion of all soil excavation activities, the corrective measures contractor will perform backfill and site restoration of remediated and disturbed areas. Grassy areas will be backfilled with clean soil and revegetated while the washrack area will be backfilled with gravel. Ditch restoration will consist of rebuilding the grass swale to pre-existing conditions and will include the installation of a turf reinforcement mat or similar material to stabilize soil until a vegetative cover is established (Appendix F).

The corrective measures contractor will obtain approximately 140 loose cubic yards of fill material from an RSA borrow area, another approved off-site borrow source, or equivalent. If sampling of the borrow source material has not been conducted, the corrective measures contractor will sample the material to confirm it is acceptable for use as backfill at the site. The borrow material sampling, if required, will include one 5-point composite sample analyzed for target compound list (TCL) SVOCs, TCL pesticides/PCBs, and TAL metals and one sample analyzed for TCL VOCs. Borrow samples will be collected in accordance with the DCQAP provided as Appendix E.

The analytical results for TAL metals will be screened against BSVs and residential soil PSVs as supplemented by a site-to-background comparison if needed. Soil concentrations for VOCs, SVOCs, and pesticides/PCBs will be screened against their respective residential soil PSVs to demonstrate that the material is acceptable for use. If an existing borrow source is utilized, the analytical parameters and acceptance limits will be at least as stringent as those proposed for new borrow sources.

General fill material will be placed in maximum 12-inch lifts. Structural fill, if needed shall be placed in maximum 6-inch lifts. Excavated material will be replaced with locally available backfill material that is best suited for the anticipated future use. Appropriately graded structural fill will be used to backfill any roadway or shoulder areas and around existing and/or future building foundations. The backfill material properties, placement methods, and testing requirements will generally conform to the guidance provided in Unified Facilities Guide Specifications for Earthwork Section.

Typically, structural fill is compacted to a dry density that is 95 percent of maximum dry density determined by American Society for Testing and Materials (ASTM) D1557. Care will be taken to moisture condition the fill during placement and compaction. The moisture content of fill including surfacing material, structural fill, and subbase during placement and compaction will

be controlled (typically within ±3 percent of the optimum moisture content determined by ASTM D1557). Field density tests using ASTMD 6938, ASTMD 2167, and/or ASTMD 1556 will be performed during placement at specified frequencies to determine if minimum densities are being achieved.

In the event that a meaningful moisture-density relationship cannot be developed for granular fill, placement will be controlled using relative density determinations in accordance with ASTM D4253 and D4254. In this case, the moisture content of the fill during placement and compaction will be a minimum relative density (typically of 70 to 85 percent) for granular materials, depending on the material and application.

Dust at the site will be controlled with water using a water truck with hose and sprayers and mulch such as straw. The corrective measures contractor will apply water to dry exposed areas until the surface is wet and repeat as needed. Water will be applied at rates so that runoff does not occur. The corrective measures contractor will not use polymers, tackifiers, stabilizers, or chlorides for dust control. Dust suppression will commence when aerosol levels in the work area or directly downwind reach 2.5 milligrams per cubic meter. This level is one-half the Occupational Safety and Health Administration threshold value for particulates not otherwise regulated (respirable fraction). Measurements will be collected during CMI using a Data Ram PDR 1000 or equivalent real-time aerosol monitor.

When backfilling and compaction is completed, clean topsoil will be placed over the affected areas. The areas will then be seeded and mulched to stimulate revegetation in the affected areas and reduce the potential for soil erosion. Seed and mulch will be applied to all disturbed areas according to the BMP handbook from the ASWCC (ASWCC, 2014), which is included in Appendix F.

All temporary fencing will be removed and the RSA-227 southern boundary chain-link fence will be replaced during site restoration.

A site inspection will be conducted 2 to 4 weeks after the seeding to confirm the revegetation is successful. If revegetation is unsuccessful, the site will be reseeded until an adequate stand of vegetation is present. All temporary fencing, plastic sheeting, hay bales, wooden stakes, and other project-related items will be removed from the site and disposed of in accordance with SOPP No. 4.0, *Investigation Derived Waste* (Shaw, 2013a).

4.10.2 Equipment Decontamination

The corrective measures contractor will designate an area within the boundary of the work areas at RSA-227, adjacent to vehicular ingress and egress areas, for equipment decontamination. The

proposed decontamination area is shown on Figure 4-2. A decontamination pad typically consists of a soil-bermed area covered with multiple layers of plastic sheeting where gross contamination can be removed from equipment. The decontamination pad will contain a sump area or low area where wash water from pressure washing will drain to be pumped into a portable holding tank. Decontamination fluids will be sampled for VOCs, SVOCs, and TAL metals. Decontamination fluids will be managed as discussed in Section 4.7. Settled soil within the sump will be disposed of with the excavated materials from RSA-227.

Nondisposable sampling equipment will be decontaminated prior to beginning work at the site and prior to the collection of individual samples to prevent cross contamination and maintain the integrity of the environmental samples collected. All sampling equipment and heavy equipment will be decontaminated in accordance with procedures specified in the RSA installation-wide quality assurance program plan (Shaw, 2013a), which was prepared in accordance with Appendix E of the AEIRG (ADEM, 2005).

4.10.3 Temporary Storm Water, Erosion, and Sediment Control Removal

Upon completion of site restoration activities, temporary erosion and sediment controls will be removed and disposed at the RSA construction debris landfill. The silt fence will remain in place until after the vegetation is established. When the silt fence is removed, the posts will be pulled from the ground and the remaining disturbed area will be reseeded. Excess soils will be removed from the silt fence and disposed of with the RDW from the excavation. The removed silt fence will be disposed of at the RSA construction and debris landfill.

4.10.4 Demobilization

Personnel, equipment, and subcontractors will be demobilized from the project site after completion of corrective measures and site restoration (i.e., revegetation and installation of permanent fencing). A small crew and minimal equipment will be retained as required to remove surplus materials and clean staging areas.

Demobilization will primarily consist of disassembly, packing, and return of rented equipment to suppliers and travel for personnel back to their home offices.

4.11 Inspections for Field Activities

Inspections may be performed to determine compliance with this work plan. The inspection criteria are included in the field audit checklist (Appendix D) and will be verified during inspection activities. Inspections may be performed and verified through visual observation, measurement of materials or equipment, examination of documentation/certification, evaluation of performance, or testing.

Inspections will be performed using a three-phase inspection method. Participants in the inspections typically include but are not limited to the task subcontractor, the project quality control manager, the regulatory representative, and the project health and safety representative. The preparatory inspection(s) are performed prior to start-up and will examine training, procedures, equipment and materials, work plans and documents, and overall readiness to perform work. Initial inspection(s) are performed when work begins on a particular feature of work and include an examination of the quality of workmanship and a review of control testing for compliance with work plan requirements. Follow-up inspection(s) are then performed to verify compliance with procedures. Follow-up inspections will ensure a continuation of quality and safety standards established during preparatory and initial inspections until completion of the definable work feature. Final follow-up inspection(s) will be conducted at the completion of the activity. The final follow-up inspection will be performed to ensure that the completed feature of work meets the work plan requirements. Any deficiencies noted during this inspection will be documented, and a determination will be made as to the corrective actions necessary to mitigate the deficiency. All significant deficiencies will be corrected prior to completion of the activity. Records of inspections will be maintained in the project files. At a minimum, inspection files will include inspection reports/checklists, inspection responses, and any supporting documents, as well as applicable comments.

4.12 Corrective Measures Implementation Reporting

CMI reporting includes submittal of a final CMI report after construction is completed. There is no plan for submittal of a progress or annual report during CMI. The Army plans to complete implementation of the ADEM-approved CMI within 180 days of starting construction. However, if completion requires greater than 180 days, the Army will submit CMI progress reports in accordance with Section VIII.D.1 of the Permit. Upon completion of the approved CMI, a final report will be prepared and submitted to ADEM to satisfy the applicable requirements of the AEIRG (ADEM, 2005). The final report of corrective measures will be submitted within 90 days of attainment of CGs pursuant to Part VIII.D of the Permit. The final report will include the following:

a) A description of activities completed

b) As-built construction drawings presenting the final limits of soil excavations at each site and the locations of confirmation samples

c) Waste manifests indicating the handling of the excavated material that has been shipped off site to an ADEM-approved, certified landfill

d) Monitoring data (soil, air, dust, and water) collected for any reason during the construction period for the purposes of monitoring potential for human and ecological exposure

e) Certification, prepared in accordance with AAC 335-13-8-02 (2)(d) by RSA and a registered professional engineer (State of Alabama), that the corrective measures required by the Permit are complete

f) Appendices consisting of site photographs, analytical reports, data validation documentation, and waste manifests.

5.0 Contingencies

The implementation of corrective measures is based on the best information currently available for RSA-227. It is recognized that variations from this CMI work plan may be required during the execution phase of the work in order to fully address actual site conditions in a timely manner that is protective of human health and the environment. The Army, ADEM, or other relevant parties may take actions to grant such variances from this CMI work plan during the corrective measures process. Any variance will be documented and included with the completion report for the site.

Some potential site conditions that may be encountered at RSA-227 are discussed in Sections 5.1 through 5.6.

5.1 Excavation Beyond Proposed Boundaries

The soil excavations at RSA-227 will proceed until the CGs for arsenic and PAHs have been achieved. The procedures for overexcavating sidewalls and floor samples are presented in the following bullets:

- If the sidewall confirmation samples do not achieve the CGs, the failing section will be expanded outward a minimum of one bucket width (approximately 3 feet) and resampled. The overexcavation process will continue until the CGs have been achieved or until further expansion of the excavation would threaten the stability of adjacent features such as buildings, roadways, etc.
- If floor confirmation sample results do not achieve CGs, the excavation will be expanded downward. Any downward extension of the excavation area will proceed in 1-foot increments (minimum) from the original depth for remediation. This process will proceed until CGs have been achieved, the average water table has been reached, or groundwater begins to enter the excavation from the sidewalls or floor.

In the event that excavation activities do not achieve the CG for arsenic, due to an adjacent feature prohibiting further excavation, the development of an LUC plan will be necessary.

5.2 Discovery of Subsurface Contaminant Sources

An engineering drawing indicates the plans for the installation of a drain field to be installed south and west of the washrack and sump (CB&I, 2015a, Appendix G). No as-built figures have been located and no discharge pipe was observed during a visual site inspection (CB&I, 2015a). Consequently, it is believed that a drain field was not installed. This will be verified during implementation of the corrective measure. If a drain field is found, it will be removed and disposed off-site. Following removal, confirmation samples will be collected from the bottom of

the excavation at a maximum spacing of 50 feet and analyzed for TAL metals and PAHs. If floor confirmation sampling results do not achieve the CG, the excavation will be expanded downward and additional confirmation samples collected as detailed in Sections 4.5 and 4.6. No additional field activities are necessary for that area if a drain field is not found.

Although no subsurface contaminant sources are expected to be encountered during the RSA-227 excavation activities, subsurface piping, drains, or other undiscovered sub-slab contaminant sources may be encountered. If any of these subsurface contaminant sources are encountered during the excavation, the feature will be handled in the following manner:

- If free liquid is found within the feature, it will be addressed as follows:
  - Small amounts will be mixed with dry soil from the excavation or an absorbent until no free liquid is visible.
  - Amounts too large for mixing/absorption will be removed, tested, and disposed of as a separate waste stream.
- Abandoned piping, drains, etc., that are within the excavation area will be excavated and staged along with the surrounding soil and disposed of in like manner with the surrounding soil.
- If a conduit extends outside the excavation then efforts will be made to remove the conduit (i.e., pipe, drain). However, if removal is not possible (because of the potential for damaging nearby structures) then the conduit will be abandoned in place by plugging with at least 2 feet of cement grout.

5.3 Excavation Dewatering

In the event that standing surface water and storm water inhibit excavation activities at the RSA-227 site, the water will be removed from the construction area by pumping. As discussed in Section 4.2.6, storm water controls will be implemented to direct potential run-on away from the site. Prior to reaching the limits of construction, the water will be passed through two silt fence barriers or equivalent. Water that has not come into contact with contaminated soil will be removed and discharged downgradient of the excavation. The discharged water will be directed through two silt fence barriers, or equivalent, to remove silt/sediment prior to leaving the project site. If the water does come into contact with contaminated soil, it will be pumped into a tank and sampled for disposal characterization.

5.4 Excavation of Unknown Utilities

If unknown utilities are discovered or existing utilities are compromised during excavation, work will stop in that portion of the work area until the utilities are identified and either relocated or repaired by the utility company or other appropriate authorities. Continuation of work in other

portions of the project site will depend on evaluation of potential hazards related to the utility issue. That evaluation will be performed by the project safety officer in consultation with the The corrective measures contractor's Health and Safety Manager.

5.5 Saturated Soil Removal

In the event contaminated soil becomes saturated in an excavation or stockpile area, the Site Manager will initiate measures to ensure that the soil can be prepared for transport and disposal. Those measures may include one or more of the following:

- Create an area within or adjacent to the affected area where excess water is allowed to drain and can then be collected.
- Mix saturated soil with dry soil (i.e., after waste characterization) ex situ prior to disposal.
- As a last resort, add absorbent to ensure no free liquids are present during transportation to the disposal facility.

5.6 Discovery of Munitions and Explosives of Concern/Chemical Warfare Materiel

Available information including historical records and recent environmental sampling data was reviewed with respect to munitions and explosives of concern (MEC) including chemical warfare materiel (CWM), or chemical agent (CA) potential at RSA-227. The review indicated that the probability of encountering unknown liquid-filled munitions or other items, measurable concentrations of CA or agent breakdown products is low. The hazard evaluation process is documented in the MEC/CWM/CA hazard forms provided in Attachment 1 of the site-specific safety and health plan (Appendix C). Based on this evaluation, it was determined that no CA monitoring or on-site UXO support will not be required for the CMI. However, in the event any suspicious item is encountered, all work shall stop and the Project Manager and Health and Safety Manager will be notified and will be responsible for following the notification requirements in RSA 75-4 (Army, current version). If the suspicious item can be positively identified by qualified UXO personnel as not presenting an explosive or chemical agent hazard or once the hazard has been removed, work will proceed. Further information on this hazard identification, notification and removal process is presented in RSA's installation-wide accident prevention plan (Shaw, 2013b).

6.0 References

Alabama Department of Environmental Management (ADEM), 2015, ***Redstone Arsenal's Alabama Hazardous Waste Management and Minimization Act Hazardous Waste Storage Facility, Thermal Treatment, Solid Waste Management Unit Corrective Action Permit, Modification No. 6***, July.

Alabama Department of Environmental Management, (ADEM), 2010a, ***General Soil Sample Collection Standard Operating Procedure (SOP) #2150, Rev. 1.1***, July.

Alabama Department of Environmental Management, (ADEM), 2010b, Memorandum issued by James L. Bryant, Environmental Services Branch, ***In-situ Sampling for the Purposes of Waste Characterization/Disposal of Soil***, August.

Alabama Department of Environmental Management (ADEM), 2008a, ***Draft RCRA Facility Assessment, Redstone Arsenal, Huntsville, Alabama***, Draft, EPA ID Number AL7 201 020 742, September.

Alabama Department of Environmental Management (ADEM), 2008b, ***Alabama Risk-Based Corrective Action Guidance Manual – Revision 2,*** April.

Alabama Department of Environmental Management (ADEM), 2005, ***Alabama Environmental Investigation and Remediation Guidance***, September.

Alabama Soil and Water Conservation Committee (ASWCC), 2014, ***Alabama Handbook for Erosion Control, Sediment Control, and Stormwater Management on Construction Sites and Urban Areas***, September.

CB&I Federal Services LLC (CB&I), 2015a, ***Revision 1 RCRA Facility Investigation Report, RSA-227, Inactive Washrack Adjacent to Building 5492, Operable Unit 6, U.S. Army Garrison-Redstone, Madison County, Alabama***, August.

CB&I Federal Services LLC (CB&I), 2015b, ***Community Involvement Plan, U.S. Army Garrison-Redstone, Madison County, Alabama***, prepared for U.S. Army Environmental Command, September.

Pacific Northwest National Laboratory, 2012, ***Visual Sample Plan***, U.S. Department of Energy, Release Version 6.2d.

Shaw Environmental, Inc. (Shaw), 2013a, ***Final, Revision I, Installation-Wide Quality Assurance Program Plan for the Program Management Contract, Volume I and Volume II, U.S. Army Garrison-Redstone, Madison County, Alabama***, September.

Shaw Environmental and Infrastructure, Inc. (Shaw), 2013b***, Installation-Wide Accident Prevention Plan, Final, U.S. Army Garrison-Redstone, Madison County, Alabama***, July.

Shaw Environmental, Inc. (Shaw), 2012a, ***Site-Specific Field Sampling Plan for a Phase II RCRA Facility Investigation at RSA-227, Inactive Washrack Adjacent to Building 5492, Operable Unite 03, U.S. Army Garrison-Redstone, Madison County, Alabama***, January.

Shaw Environmental, Inc. (Shaw), 2012b, ***Delineation Data Gap Work Plan, RSA-227, Former Storage Warehouse building 778/5678, Operable Unit 30, U.S. Army Garrison-Redstone, Madison County, Alabama***, October.

Shaw Environmental, Inc. (Shaw), 2012c, ***Project Management Plan for Task Order 0008, U.S. Army Garrison-Redstone, Madison County, Alabama***, September.

Shaw Environmental, Inc. (Shaw), 2011, ***Rev. 1 RCRA Interim Measure Work Plan at RSA-227, Inactive Washrack Adjacent to Building 5492, Operable Unit 6, U.S. Army Garrison-Redstone, Madison County, Alabama***, July.

Shaw Environmental, Inc. (Shaw), 2010, ***Final (Revision 1) Installation-Wide Strategy for Cleanup of Impacted Wetlands, U.S. Army Garrison-Redstone, Madison County, Alabama***, prepared for U.S. Army Environmental Command, Aberdeen Proving Ground, Maryland, May.

Shaw Environmental, Inc. (Shaw), 2009a, ***Final Installation-Wide Groundwater Land-Use Control Remedial Design, Redstone Arsenal, Madison County, Alabama, Revision 1***, prepared for the U.S. Army Corps of Engineers, Savannah District, May.

Shaw Environmental, Inc. (Shaw), 2009b, ***Installation-Wide Groundwater Cleanup Strategy, U.S. Army Garrison-Redstone, Madison County, Alabama***, prepared for U.S. Army Environmental Command, Aberdeen Proving Ground, Maryland, December.

Shaw Environmental, Inc. (Shaw), 2007, ***Final Interim Record of Decision, Interim Remedial Action for Installation-Wide Groundwater, Redstone Arsenal, Madison County, Alabama,*** prepared for the U.S. Army Corps of Engineers, Savannah District, Savannah, Georgia, September.

Shaw Environmental, Inc. (Shaw), 2005, ***Draft RSA-145 Potential Source Area Investigation, Redstone Arsenal, Madison County, Alabama***, prepared for the U.S. Army Corps of Engineers, Savannah District, Savannah, Georgia, June.

U.S. Army Garrison-Redstone (Army), 2012, ***Redstone Arsenal Environmental Site Access Control Program***, Redstone Arsenal Regulation 200-7, September.

U.S. Army Garrison-Redstone (Army), Current version, ***Redstone Arsenal Garrison: Munitions and Explosives of Concern Program Policy,*** Regulation 75-4, prepared by the U.S. Army Garrison, Redstone Arsenal, Alabama.

U.S. Environmental Protection Agency (EPA), 2013, ***Regional Screening Table***, http://www.epa.gov/reg3hwmd/risk/human/rb-concentration_table/index.htm, May.

U.S. Environmental Protection Agency (EPA), 1993, ***Provisional Guidance for Quantitative Risk Assessment of Polycyclic Aromatic Hydrocarbons***, Office of Health and Environmental Assessment, Cincinnati, Ohio, EPA/600/R-93/089, March.

ATTACHMENT 1

LIST OF ACRONYMS AND ABBREVIATIONS

List of Abbreviations and Acronyms
Redstone Arsenal, Madison County, Alabama

Acronym	Definition
µg/g	micrograms per gram
µg/kg	micrograms per kilogram
µg/L	micrograms per liter
µmhos/cm	micromhos per centimeter
µS/cm	microsiemens per centimeter
$\mu g/m^3$	micrograms per cubic meter
ºC	degrees Celsius
ºF	degrees Fahrenheit
%D	percent difference
%R	percent recovery
1,1,2-TCA	1,1,2-trichloroethane
1,1-DCE	1,1-dichloroethene
1,2-DCE	1,2-Dichloroethene
2,4,5-T	2,4,5-trichlorophenoxyacetic acid
2,4,5-TP	2,4,5-trichlorophenoxypropionic acid
2,4-D	2,4-dichlorophenoxyacetic acid
2-ADNT	2-amino-4,6-dinitrotoluene
4-ADNT	4-amino-2,6-dinitrotoluene
AAC	Alabama Administrative Code
AAFES	Army and Air Force Exchange Service
AAP	Army Ammunition Plant
AB	ambient blank
ABLM	adult blood lead model
ABP	agent breakdown products
ABS	dermal absorption factor
ACAD	AutoCadd
ACGIH	American Conference of Governmental Industrial Hygienists
ACM	asbestos-containing material
ACSIM	Assistant Chief of Staff for Installation Management
ADAF	age-determined adjustment factor
ADEM	Alabama Department of Environmental Management
ADPH	Alabama Department of Public Health
AEC	U.S. Army Environmental Command
AEDA	ammunition, explosives, and other dangerous articles
AEDB	Army Environmental Database
AEIRG	Alabama Environmental Investigation and Remediation Guidance
AEL	airborne exposure limit
AET	apparent effects threshold
AF	soil-to-skin adherence factor
AGS	Alabama Geographic Society
AHA	ammunition holding area
AHWMMA	Alabama Hazardous Wastes Management and Minimization Act
AIPH	Army Institute of U.S. Public Health
AL	Alabama
ALDOT	Alabama Department of Transportation
ALNHP	Alabama Natural Heritage Program
amb.	amber
amsl	above mean sea level (1988 North American Vertical Datum, NAVD 88)
ANOVA	Analysis of Variance
AOC	area of concern
AOI	area of investigation
AP	armor piercing
APEC	areas of potential ecological concern
APHC	U.S. Army Public Health Center
APT	armor-piercing tracer
AR	Army Regulation
AR/COC	analysis request/chain of custody
ARAR	applicable or relevant and appropriate requirement
ARBCA	Alabama Risk-Based Corrective Action
AREE	area requiring environmental evaluation
ARFO	ammunition returned from overseas
Army	U.S. Army
AS	air sparging
ASCII	American Standard Code for Information Interchange
ASP	Ammunition Supply Point
ASR	archives search report
AST	aboveground storage tank
ASTM	American Society for Testing and Materials
ASV	alternative screening value
ASWCC	Alabama Soil and Water Conservation Committee
AT	averaging time
ATF	Bureau of Alcohol, Tobacco, Firearms and Explosives
$atm\text{-}m^3/mol$	atmospheres per cubic meter per mole
ATSDR	Agency for Toxic Substances and Disease Registry
ATTN	attention
ATV	all-terrain vehicle
AUF	area use factor

List of Abbreviations and Acronyms
Redstone Arsenal, Madison County, Alabama

Acronym	Definition
AWARE	Associated Water and Air Resources Engineers, Inc.
AWBC	alternative water balance cover
AWQC	ambient water quality criteria
AWQS	ambient water quality standard
B	Analyte detected in laboratory or field blank at concentration greater than the reporting limit (and greater than zero)
BAF	bioaccumulation factor
$BAF_{soil\text{-}to\text{-}invert}$	soil-to-invertebrate bioaccumulation factor
BaOH	barium hydroxide
BAP	benzo(a)pyrene
BCF	bioconcentration factor
BCT	BRAC Cleanup Team
BDCM	bromodichloromethane
BEHP	bis(2-ethylhexyl)phthalate
BEM	Buried Explosion Module
BERA	baseline ecological risk assessment
BFB	bromofluorobenzene
BFE	base flood elevation
BFM	bonded fiber matrix
BG	Bacillus globigii
bgs	below ground surface
Bhate	Bhate Environmental Associates, Inc.
BHC	hexachlorocyclohexane
BHHRA	baseline human health risk assessment
BIM	basic information map
BIP	blow(n)-in-place
bkg	background
bls	below land surface
BMP	best management practice
BOD	biological oxygen demand
Bp	soil-to-plant biotransfer factors
BR	bedrock
BR-D	deep bedrock
BRAC	Base Realignment and Closure
BSAF	biota-to-sediment accumulation factors
BSC	background screening criterion
BSCRN	bottom of screen
BSV	background screening value
BTAG	Biological Technical Assistance Group
BTEX	benzene, toluene, ethyl benzene, and xylenes
BTOC	below top of casing
BTV	background threshold value
BW	body weight
BZ	breathing zone
C	ceiling limit value
C&D	Construction & Demolition
Ca	carcinogen
CA	chemical agent; corrective action
CAA	Clean Air Act
CAB	chemical warfare agent breakdown products
CACM	Chemical Agent Contaminated Media
$CaCO_3$	calcium carbonate
CAIS	chemical agent identification set
CalEPA	California Environmental Protection Agency
CAMU	corrective action management unit
CAP	corrective action plan; Contractor Acquired Property
CARA	corrective action request
CARA	Chemical, Biological, Radiological, Nuclear, and High-Yield Explosives (CBRNE) Analytical and Remediation Activity
CAS	Chemical Abstracts Service
CASNO	Chemical Abstract Service identification number
CASRN	Chemical Abstracts Service Registry Number
CB	chlorobenzene
CB&I	CB&I Federal Services LLC
CBFM	collodial borescope flowmeter
CBMPP	construction best management practices plan
CBR	chemical, biological, and radiological
CBRN	chemical, biological, radiological, nuclear
CBRNE	Chemical, Biological, Radiological, Nuclear, and High-Yield Explosives
CBZ	chlorobenzene
CCAL	continuing calibration
CCB	continuing calibration blank
CCC	criterion continuous concentration
CCl_4	carbon tetrachloride
CCV	continuing calibration verification
CD	compact disk; Consent Decree
CDI	chronic daily intake
CDTF	Chemical Defense Training Facility
CEHNC	U.S. Army Engineering and Support Center, Huntsville

List of Abbreviations and Acronyms
Redstone Arsenal, Madison County, Alabama

Acronym	Definition
CERCLA	Comprehensive Environmental Response, Compensation, and Liability Act
CERFA	Community Environmental Response Facilitation Act
CESAS	Corps of Engineers South Atlantic Savannah
CF	conversion factor
CFC	chlorofluorocarbon
CFDP	Center for Domestic Preparedness
CFR	Code of Federal Regulations
cfs	cubic feet per second
C_{fw}	contaminant concentration in fish from surface water
CG	phosgene (carbonyl chloride); cleanup goal
CGI	combustible gas indicator
ch	inorganic clays of high plasticity
CHPPM	U.S. Army Center for Health Promotion and Preventive Medicine
CIH	Certified Industrial Hygienist
cis-1,2-DCE	cis-1,2-Dichloroethene
CK	cyanogen chloride
Cl	chloride, chlorinated
CLIN	contract line item number
ClO_4^-	perchlorate
CLP	Contract Laboratory Program
CLPILM	EPA CLP's prefix designation for the inorganic metals analysis statement of work
CLP M	EPA CLP's prefix designation for the mercury analysis statement of work
CM	corrective measure
cm	centimeter
cm/hour	centimeters per hour
cm^2	cubic centimeter
cm^2/second	square centimeters per second
cm^3/g	cubic centimeters per gram
CMA	U.S. Army Chemical Materials Activity; corrective measure alternative
CMC	criterion maximum concentration
CMD	corrective measures design
CMI	corrective measures implementation
CMIP	corrective measures implementation work plan
CMO	corrective measure objective
CMS	corrective measures study
CMT	Continuous Multichannel Tubing
CN	chloroacetophenone
CNB	chloroacetophenone, benzene, and carbon tetrachloride
CNS	chloroacetophenone, chloropicrin, and chloroform
CO	carbon monoxide
CO_2	carbon dioxide
Co-60	cobalt-60
CoA	Code of Alabama
COAC	chemical of analytical concern
COC	when discussing chemicals, COC means chemical of concern; when discussing field paperwork, COC means chain of custody
COE	Corps of Engineers
COI	constituent of interest
Con	skin or eye contact
COPAC	chemical of potential analytical concern
COPC	chemical of potential concern
COPEC	chemical of potential ecological concern
COR	Contracting Officer's Representative
CP	communication plan; Competent Person
CPOM	coarse particulate organic matter
CPSS	chemicals present in site samples
CPVC	chlorinated polyvinyl chloride
C_{pw}	chemical of potential ecological concern concentration in pore water
CQAP	construction quality assurance plan
CRA	Conestoga-Rovers and Associates
CRDL	contract-required detection limit
CRL	certified reporting limit
CRP	community relations plan; compliance-related program
CRQL	contract-required quantitation limit
CRSA	Central Redstone Arsenal
CRZ	contamination reduction zone
CS	ortho-chlorobenzylidene-malononitrile
CSA	confirmation sampling activities
C_{sed}	chemical of potential ecological concern concentration in sediment from groundwater
CSEM	conceptual site exposure model
CSM	conceptual site model
CSP	chemical site plan
CSP	corrugated steel pipe
CSS	chemical safety submission
CT	carbon tetrachloride
CTC	cost to completion
ctr.	container

List of Abbreviations and Acronyms
Redstone Arsenal, Madison County, Alabama

Acronym	Definition
CVAA	2-chlorovinylarsenous acid
C_w	contaminant concentration in water
CWA	when discussing chemicals, CWA means chemical warfare agent; when discussing laws, CWA means Clean Water Act
CWM	If used in the text of a document this acronym means chemical warfare materiel; if used in an analytical table which summarizes container requirements, this acronym means clear, widemouth container
CWS	Chemical Warfare Service
CX	dichloroformoxime
D	duplicate; duplicate contamination; when used as a validation qualifier, D means dilution
D2PC	Personal Computer Program for Chemical Hazard Prediction
DAD	average dermally absorbed dose
DAVS	detector-aided visual survey
D&I	detection and identification
DA	Department of the Army
DA PAM	Department of the Army Pamphlet
DAAMS	Depot Area Air Monitoring System
DA_{event}	dermal dose absorbed per event
DAF	dilution-attenuation factor
DAF4	dilution-attenuation factor 4
DANC	decontamination agent, non-corrosive
DAP	diammonium phosphate
DASAF	Department of the Army Safety Office
DAVS	detector-aided visual survey
DBA	dibenz(a,h)anthracene
DBCP	1,2-dibromo-3-chloropropane
DC	District of Columbia
DCA	dichloroethane
DCB	decachlorobiphenyl
DCE	dichloroethene
DCMA	Defense Contract Management Agency
DCQAP	data collection quality assurance plan
DD	Decision Document
DD	Department of Defense (form only)
DDD	dichlorodiphenyldichloroethane (this is an industry standard acronym for this chemical)
DDE	dichlorodiphenyldichloroethene (this is an industry standard acronym for this chemical)
DDESB	Department of Defense Explosives Safety Board
DDT	dichlorodiphenyltrichloroethane
DEH	Directorate of Engineering and Housing
DEHP	bis(2-ethylhexyl)phthalate
DEMIL	Demilitarization Areas
DEP	depositional soil
DERP	Defense Environmental Restoration Program
DES	Directorate of Environment and Safety
DF	dilution factor
DFTPP	decafluorotriphenylphosphine
DFOW	Definable Feature of Work
DGM	digital geophysical mapping
DHC	*Dehalococcoides* sp.
DI	deionized
DID	data item description
DIMP	di-isopropylmethylphosphonate
DL	detection limit
DM	adamsite
DMBA	dimethylbenz(a)anthracene
DMM	discarded military munitions
DMMP	dimethylmethylphosphonate
DNAPL	dense nonaqueous-phase liquid
DNB	dinitrobenzene
DNBZ	dinitrobenzene
DNOC	4,6-dinitro-2-methylphenol
DNT	dinitrotoluene
DO	dissolved oxygen
DoD	U.S. Department of Defense
DODI	Department of Defense Instruction
DOJ	U.S. Department of Justice
DOT	U.S. Department of Transportation
DP	direct-push
DPDO	Defense Property Disposal Office
DPT	direct-push technology
DQCR	Daily Quality Control Report
DQO	data quality objective
DRMO	Defense Reutilization and Marketing Office
DRO	diesel range organics
DS	deep (subsurface) soil
DS2	Decontamination Solution Number 2
DSERTS	Defense Site Environmental Restoration Tracking System
DSMOA	Defense and State Memorandum of Agreement
DSN	Defense Switched Network
DTSC	Department of Toxic Substances Control
DU	decision unit

List of Abbreviations and Acronyms
Redstone Arsenal, Madison County, Alabama

Acronym	Definition
DUA	data usability assessment
DVD	digital versatile disc or digital video disc
DWEL	drinking water equivalent level
e.g.	for example
E3	Electromagnetic Environmental Effects
EB	equipment blank
EBS	environmental baseline study
EC_{20}	effects concentration for 20 percent of a test population
EC_{50}	effects concentration for 50 percent of a test population
ECBC	Edgewood Chemical and Biological Center
Eco-RGRG	ecological risk-based remedial goal
Eco-SSL	ecological soil screening level
ECM	earth covered magazine
ED	exposure duration
EDD	electronic data deliverable
EDQL	ecological data quality level
EDTA	ethylenediaminetetracetic acid
EE/CA	engineering evaluation and cost analysis
EF	exposure frequency
EFR	enhanced fluid recovery
Eh	oxidation-reduction potential
ELAP	Environmental Laboratory Accreditation Program
Elev.	elevation
EM(1)	electromagnetic
EM(2)	Engineer Manual
EM31	Geonics Limited EM31 Terrain Conductivity Meter
EM61	Geonics Limited EM61 High-Resolution Metal Detector
EMI	electromagnetic induction
Empirical	Empirical Laboratories, LLC
EMSI/EL	Environmental Management Services, Inc./Environmental Laboratories
EMT	emergency medical technician
EOC	Emergency Operation Center
EOD	explosive ordnance disposal
EODT	explosive ordnance disposal team; EOD Technology, Inc.
EP	exit pathway
EPA	U.S. Environmental Protection Agency
EPC	exposure point concentration
EPDS	Emergency Personnel Decontamination Station
EPIC	Environmental Photographic Interpretation Center
EPP	Environmental Protection Plan
EPRI	Electrical Power Research Institute
EPT	Ephemeroptera, Plecoptera, Trichoptera
EQ	EQ Environmental Quality Company
EQL	estimated quantitation limit
ER	equipment rinsate; USACE Engineer Regulation
ERA	ecological risk assessment
ERH	electrical resistive heating
ERIS	Environmental Restoration Information System
ER-L	effects range-low
ER-M	effects range-medium
ESA	ecologically sensitive area
ESB	Equilibrium Partitioning Sediment Benchmark
ESE	Environmental Science and Engineering, Inc.
ESL	ecological screening level
ESP	explosives site plan
ESMP	Endangered Species Management Plan; Explosives Safety Management Program
ESS	explosives safety submission
ESTCP	Environmental Security Technology Certification Program
ESV	ecological screening value
ET	exposure time
ET_{sw}	exposure time - surface water
EU	exposure unit
EUR	Environmental Use Restriction
EV	event frequency
E-W	east to west
Excel	Excel Geophysical Services
Exp.	Explosives
EXTOXNET	Extension Toxicology Network
Ey	Etowah silty clay loam
EZ	exclusion zone
FA	fraction absorbed
FAC	facultative wetland
FACU	facultative upland
FACW	facultative wetland
FADL	Field Activity Daily Log
FAR	Federal Acquisition Regulations
FAV	final acute value
FB	field blank
FBI	Family Biotic Index

List of Abbreviations and Acronyms
Redstone Arsenal, Madison County, Alabama

Acronym	Definition
FCSV	food chain screening value
FCV	final chronic value
FD	field duplicate
FDA	U.S. Food and Drug Administration
Fe^{+2}	ferrous iron
Fe^{+3}	ferric iron
FEC	fluid electrical conductivity
FedEx	Federal Express, Inc.
FEMA	Federal Emergency Management Agency
FFA	Federal Facilities Agreement
FFCA	Federal Facilities Compliance Act
FFE	field flame expedient
FFP	firm fixed price
FFS	focused feasibility study
FI	fraction of exposure; filtered
FID	flame ionization detector
FIFRA	Federal Insecticide, Fungicide, & Rodenticide Act
FLUTe	Flexible Liner Underground Technologies, Ltd. Co.
FM-ARNGTC	Fort McClellan Army National Guard Training Center
FMDC	Fort McClellan Development Commission
FML	flexible membrane liner
f_{oc}	fraction organic carbon
FOIA	Freedom Of Information Act
FOMRA	Former Ordnance Motor Repair Area
FOST	Finding of Suitability to Transfer
Foster Wheeler	Foster Wheeler Environmental Corporation
FR	Federal Register
Frtn	fraction
FS	feasibility study
FSH	Fort Sam Houston
FSP	field sampling plan
FS smoke	sulfur trioxide and chlorosulfonic acid
ft	foot, feet
ft/day	feet per day
ft/ft	feet per foot
ft/yr	feet per year
ft^2	square feet
ft^2/day	square feet per day
FTA	Fire Training Area
FUP	fixed unit price
FWV	fieldwork variance
FY	fiscal year
g	gram
G&M	Geraghty and Miller, Inc.
g/cm^3	grams per cubic centimeter
g/m^2	grams per square meter
g/m^3	gram per cubic meter
G-856	Geometrics, Inc. G-856 magnetometer
G-858G	Geometrics, Inc. G-858G magnetic gradiometer
GA	tabun
GAC	granular activated carbon
GAF	General Aniline and Film; gastrointestinal absorption factor
gal	gallon
gal/min	gallons per minute
GB	sarin (isopropyl methylphosphonofluoridate)
GC	gas chromatograph
GC/MS	gas chromatograph/mass spectrometer
GCL	geosynthetic clay liner
GCMR	Geophysical Classification for Munitions Response
GCWD	Gulf Chemical Warfare Depot
GCWS	Gulf Chemical Warfare Service
GEAE	Generic Ecological Assessment Endpoint
GEDIT	gaseous electron donor injection technology
GFAA	graphite furnace atomic absorption
GIP	geophysical investigation plan
GIS	geographic information system
GNSS	Global Navigation Satellite System
GPCR	gas phase chemical reduction
gpm	gallons per minute
GPR	ground-penetrating radar
GPS	global positioning system
GRA	general response action
GRIM	Groundwater Responsibility Information Matrix
GRO	gasoline range organics
GS	ground scar

List of Abbreviations and Acronyms
Redstone Arsenal, Madison County, Alabama

Acronym	Definition
GSA	when discusing the federal government requirements, GSA means General Services Administration; when discussing geology, GSA means Geologic Survey of Alabama
GSE	Great Southern Engineering
GSR	green and sustainable remediation
GST	ground stain
GSV	geophysical systems verification
GUC	groundwater use control
GW	groundwater
GWDT	Groundwater Design Team
GWMZ	groundwater monitoring well, multizone
GWTR	groundwater monitoring well
H&S	health and safety
H_2O_2	hydrogen peroxide
H_2S	hydrogen sulfide
HA	hand auger; hazard assessment
HAL	Health Advisory level
HAMUST56	Huntsville Arsenal Mustard Plant 2, Lines 5 & 6
Harmon	Harmon Engineering Associates, Inc.
HAZMATCAD™	Hazardous Material Chemical Agent Detector
HAZWOPER	Hazardous Waste Operations and Emergency Response
HBESL	health-based environmental screening level
HC	mixture of hexachloroethane, aluminum powder, and zinc oxide (smoke producer)
HCl	hydrochloric acid
HD	distilled mustard (bis-[dichloroethyl]sulfide); hazard division
HDPE	high-density polyethylene
HE	high explosive
HEAST	Health Effects Assessment Summary Tables
HEAT	High Explosive Anti-Tank
Herb.	herbicides
HFD	hazardous fragment distance
HHAWQS	human health Alabama water quality standard
HHRA	human health risk assessment
HHRE	human health risk evaluation
HI	hazard index
HI_{COC}	total hazard index for a given relevant COC, for a given receptor added across all exposure routes for given source medium
Hi_{cum}	cumulative hazard index summed across chemicals and source media
HI_{TO}	total hazard index for a given target organ for a given receptor
Hm	hot measurement
HMW	high molecular weight
HMX	cyclotetramethylenetetranitramine; octahydro-1,3,5,7-tetranitro-1,3,5,7-tetrazocane
HN	hydrogen mustard
HNC	hydrogen cyanide
HNO_3	nitric acid
HP	hydropunch
HPLC	high-performance liquid chromatography
HQ	hazard quotient
HQ_{COCi}	hazard quotient for the target organ of interest estimated for the ith COC
$'HQ_i$	hazard index for a given chemical summed across exposure routes and source media
$'HQ_{Ri}$	hazard quotient for the given chemical for exposure route i
HQ_{screen}	screening-level hazard quotient
hr	hour
HRR	Historical Records Review
HS	mustard
HSA	hollow-stem auger
HSB	Huntsville Spring Branch
HSDB	Hazardous Substances Data Bank
HSMR	Huntsville Spring Branch at Martin Road
HT	British Mustard
HTPB	hydroxy-terminated polybutadiene
HTRW	hazardous, toxic, and radioactive waste
HTW	hazardous and toxic waste
HUB	Historically Underutilized Business
HWCL	hazardous waste control limit
HWSU	hazardous waste storage unit
HY	hydrostratigraphic unit
HYPN	hydropunch
Hz	hertz
I	out of control, data rejected due to low recovery
I-565	Interstate 565
IAP	Installation Action Plan
IATA	International Air Transport Authority
I-AVSS	instrument-aided visual surface sweep
ICAL	initial calibration
ICAM	improved chemical agent monitor
ICB	initial calibration blank
ICP	inductively coupled plasma

List of Abbreviations and Acronyms
Redstone Arsenal, Madison County, Alabama

Acronym	Definition
ICS	interference check sample
ICV	initial calibration verification
ID	identification; inside diameter
IDL	instrument detection limit
IDLH	immediately dangerous to life or health
IDM	investigative-derived media
IDQTF	Intergovernmental Data Quality Task Force
IDS	intrusion detection system
IDW	investigation-derived waste; investigative-derived waste
i.e.	that is (in other words)
IELCR	individual excess lifetime cancer risk
$IELCR_{coc}$	total individual excess lifetime cancer risk for a given relevant chemical of concern, for a given receptor added across all exposure routes for a
'$IELCR_{Cum}$	cumulative cancer risk for a given receptor summed across chemicals and source media
'$IELCR_{Ri}$	cancer risk for the given chemical in a given source medium for exposure route i
'$IELCR_{T}$	total cancer risk for the given chemical in a given source medium summed across exposure routes
$IELCR_{(Ti)}$	total cancer risk for chemical i in a given source medium summed across exposure routes
IEOC	Installation Emergency Operations Center
IEUBK	Integrated Exposure Uptake Biokinetic
IF	ingestion factor; inhalation factor
IIP	intrusive investigation plan
ILCR	incremental lifetime cancer risk
ILM	EPA CLP's prefix designation for the inorganic metals analysis statement of work for EPA contract laboratory program
IM	interim measure; isobutyl methacrylate
IMU	inertial measurement unit
IM-AE	isobutyl methacrylate polymer AE
IMPA	isopropylmethyl phosphonic acid
in.	inch
Inc.	Incorporated
Ing	ingestion
Inh	inhalation
INT	interface
IOU	integrator operable unit
IP	ionization potential
IPS	International Pipe Standard
IR	ingestion rate
IRAO	interim remedial action objective
IRDMIS	Installation Restoration Data Management Information System
IR_f	fish ingestion rate
'IR_{sw}	ingestion rate
IRFNA	inhibited red fuming nitric acid
IRIS	Integrated Risk Information System
IROD	interim record of decision
IRP	Installation Restoration Program
IRSL	industrial regional screening level
IS	incremental sampling
ISAB	in situ anaerobic bioremediation
ISBN	International Standard Book Number
ISL	initial screening level
ISO	industry standard object
ISTD	in situ thermal destruction
ISTT	in situ thermal treatment
IT	IT Corporation
ITEMS	IT Environmental Management System™
ITRC	Interstate Technology and Regulatory Council
IV	intervention value
IVS	instrument verification strip
IW	installation-wide
IWGW	installation-wide groundwater
IWWP	installation-wide work plan
J	estimated concentration
J&E	Johnson and Ettinger
JD	jurisdictional determination
JOR	job order request
K	conductivity
K_d	soil-water distribution coefficient
Kd_{bs}	bed sediment-sediment pore water partition coefficient
KeV	kilo electron volt
kg	kilogram
kg/m^3	kilograms per cubic meter
$KMnO_4$	potassium permanganate
KO	Contracting Officer
K_p	permeability coefficient
K_{oc}	organic carbon partioning coefficient
K_{ow}	octanol-water partition coefficient
kVA	kilovolt-ampere

List of Abbreviations and Acronyms
Redstone Arsenal, Madison County, Alabama

Acronym	Definition
L	if used as part of the units of measure, the acronym stands for "liter", if used as a chemical name, this acronym stands for lewisite
L/cm^3	liters per cubic centimeter
L/day	liters per day
L/kg/day	liters per kilogram per day
LANL	Los Alamos National Laboratory
lb	pound
LBP	lead-based paint
lbs/year	pounds per year
LC	liquid chromatography
LC_{50}	lethal concentration for 50 percent population tested
LCS	laboratory control sample
LCSD	laboratory control sample duplicate
LD_{50}	lethal dose for 50 percent population tested
LDD	lost, damage, or destruction
LEL	lower explosive limit
LF	Leaching Factor
LiDAR	Light Detection and Ranging
LL	low level
LLC	limited liability company
LNAPL	light nonaqueous-phase liquid
LOAEL	lowest-observed-adverse-effects level
LOD	limit of detection
LOEC	lowest-observable-effect-concentration
LOQ	limit of quantitation
LSA	limited site assessment
LSV	leachate screening value
LTM	long-term management
LTV	leachate screening value
LUC	land-use control
LUCAP	land-use control assurance plan
LUCER	land-use control effectiveness report
LUCIP	land-use control implementation plan
m	meter
m/year	meters per year
m/yr	meters per year
m/second	meters per second
m^3/hour	cubic meters per hour
m^3/kg	cubic meters per kilogram
MACOM	Major Command
MADEP	Massachusetts Department of Environmental Protection
MARB	Munitions Assessment Review Board
max	maximum
MB	method blank
MC	munitions constituents
MCDZ	McDonald Creek discharge zone
MCE	Maximum Credible Event
MCL	maximum contaminant level
MCLG	maximum contaminant level goal
MCPA	4-chloro-2-methylphenoxyacetic acid
MCPP	2-(2-methyl-4-chlorophenoxy)propionic acid
MCS	media cleanup standard
MD	munitions debris; Mahalanobis Distance
MDAS	Material Documented as Safe
MDC	maximum detected concentration
MDCC	maximum detected constituent concentration
MDEH	Material Documented as an Explosive Hazard
MDL	method detection limit
MEC	munitions and explosives of concern
MEE	methane, ethane, and ethene
MEP	Multiple Extraction Procedure
MeV	mega electron volt
Mfp	Mississippian Fort Payne
mg	milligrams
mg/cm^2	milligrams per square centimeter
mg/cm^2/day	milligrams per square centimeter per day
mg/cm^2/event	milligrams per square centimeter per event
mg/day	milligrams per day
mg/kg	milligrams per kilogram
mg/kg-day	milligram per kilogram per day
mg/kgbw/day	milligrams per kilogram of body weight per day
mg/L	milligrams per liter
mg/m^3	milligrams per cubic meter
mgal	million gallons
MGFD	munition with the greatest fragmentation distance
mh	inorganic silts, micaceous or diatomaceous fine, sandy or silt soils
MHz	megahertz

List of Abbreviations and Acronyms
Redstone Arsenal, Madison County, Alabama

Acronym	Definition
MI	multi-incremental
MICC	Mission & Installation Contracting Command
min	minimum
MINICAMS	miniature continuous air monitoring system
MIS	Management Information System
mL	milliliter
mm	millimeter
MMAS	Mobile Munitions Assessment Systems
MMBtu/hr	million Btu per hour
MMCS	Missile and Munitions Command School
MM-CX	Military Munitions Center of Expertise
MMRP	Military Munitions Response Program
Mn^{+4}	manganese
MNA	monitored natural attenuation
MnO_4-	permanganate ion
MNR	monitored natural recovery
MOA	Memorandum of Agreement
MOCA	4,4-methylene-bis(2-chloroaniline)
MOGAS	motor vehicle gasoline
MOUT	Military Operations in Urban Terrain
MP	Military Police
MPA	methyl phosphonic acid
MPC	maximum permissible concentration; measurement performance criteria
MPM	most probable munition
MPPEH	Material Potentially Presenting an Explosive Hazard
MPR	4.2-Inch Mortar Proofing Range
MQL	method quantitation limit
MQO	measurement quality objective
MR	molasses residue; munitions response
MRA	munitions response area
MRC	multiple round container
MRL	method reporting limit
MRL	minimal risk level
MRR	Materials Receiving Report
MRS	Munitions Response Site
MS	matrix spike
mS/cm	millisiemens per centimeter
mS/m	millisiemens per meter
MS/MSD	matrix spike/matrix spike duplicate
MSD	when discussing laboratory QC, MSD means matrix spike duplicate; when discussing explosives, MSD means minimum separation distance
MSFC	George C. Marshall Space Flight Center
msl	mean sea level
Mt	Mississippian Tuscumbia Limestone
MTBE	methyl tertiary butyl ether
M&TE	measurement and test equipment
mV	millivolts
MW	monitoring well
Na	sodium
N/A	not applicable
NA	not applicable
NAD	North American Datum
NAD83	North American Datum of 1983
$NaMnO_4$	sodium permanganate
NAPL	nonaqueous-phase liquid
NAS	National Academy of Sciences
NASA	National Aeronautics and Space Administration
NAVD 88	North American Vertical Datum, 1988 adjustment
NAVD88	North American Vertical Datum of 1988
NB	nitrobenzene
NBA	Northern Burial Area
NCEA	National Center for Environmental Assessment
NCP	National Contingency Plan
NCR	nonconformance report
NCRP	National Council on Radiation Protection and Measurements
ND	not detected
NDA	Northern Disposal Area
NDMA	n-nitrosodimethylamine
NDPA	n-nitroso-di-n-propylamine
NE	northeast
NELAP	National Environmental Laboratory Accreditation Program
NEPA	National Environmental Protection Act
NEW	net explosive weight
NFA	no further action
NFG	National Functional Guidelines
NFPA	National Fire Protection Agency
NG	National Guard

List of Abbreviations and Acronyms
Redstone Arsenal, Madison County, Alabama

Acronym	Definition
ng/L	nanograms per liter
NGB	National Guard Bureau
NGP	National Guardsperson
NGVD	National Geodetic Vertical Datum
Ni	nickel
NIC	notice of intended change
NIOSH	National Institute for Occupational Safety and Health
NIST	National Institute of Standards and Technology
NJDEP	New Jersey Department of Protection
NLM	National Library of Medicine
NLT	no later than
NMEA	National Marine Electronics Association
No.	number
NO_3^-	nitrate
NOAA	National Oceanic and Atmospheric Administration
NOAEL	no-observed-adverse-effects level
NOEC	no-observable-effect concentration
NONEL	non-electric
NP	nitropropyl
NPDES	National Pollutant Discharge Elimination System
NPL	National Priorities List
NPW	net present worth
NR	not requested
NRC	National Research Council
NRCC	National Research Council of Canada
NRHP	National Register of Historic Places
NRL	Naval Research Laboratory
NRT	near real time
ns	nanosecond
NS	not surveyed
N-S	north to south
NSA	New South Associates, Inc.
NT	nitrotoluene
nT	nanotesla
nT/m	nanoteslas per meter
NTCRA	Non-Time Critical Removal Action
NTIS	National Technical Information Service
NTU	nephelometric turbidity unit
nv	not validated
NY DOH	New York State Department of Health
O&G	oil and grease
O&M	operation and maintenance
O_2	oxygen
O_3	ozone
OB/OD	open burn/open detonation
OBL	obligate
OCDD	octachlorodibenzo-p-dioxin
OD	outside diameter; other (nonmunitions) debris
OE	ordnance and explosives
OEC	Ordnance Explosives Center
OEHHA	Office of Environmental Health Hazard Assessment (of the California Environmental Protection Agency)
OESS	Ordnance and Explosives Safety Specialist
OGMS	Ordnance Guided Missile School
oh	organic clays of medium to high plasticity
OH·	hydroxyl radical
ol	organic silts and organic silty clays of low plasticity
OMEMS	Ordnance Munitions and Electronic Maintenance School
OP	organophosphorus; organochlorine pesticide
ORA	Operational Range Assessment
ORAP	Operational Range Assessment Program
Ord	Ordovician
ORP	oxidation-reduction potential
OSA	Open Storage Area
OSD	overage/shortage/damage
OSHA	Occupational Safety and Health Administration
OSWER	Office of Solid Waste and Emergency Response
OU	operable unit
OVA	organic vapor analyzer
OVB	overburden
OVB-S	shallow overburden
OVM	organic vapor monitoring
OVM-PID/FID	organic vapor meter-photoionization detector/flame ionization detector
OWS	oil/water separator
oz	ounce
P&T	pump and treat
PA	preliminary assessment
PA3	Plant Area 3, Incendiaries Manufacturing

List of Abbreviations and Acronyms
Redstone Arsenal, Madison County, Alabama

Acronym	Definition
PAED	Public Access Exclusion Distance
PAH	polynuclear aromatic hydrocarbon
PAL	preliminary action level
PARCCS	precision, accuracy, representativeness, comparability, completeness, and sensitivity
Parsons	Parsons Engineering Science, Inc.
Pb	lead
PBAA	polybutadiene acrylic acid
PBAN	polybutadiene/acrylic acid/acrylonitrile
PBC	performance-based contract
PBMS	performance-based measurement system
PC	permeability coefficient
PCA	tetrachloroethane
PCB	polychlorinated biphenyl
PCDD	polychlorinated dibenzo-p-dioxins
PCDF	polychlorinated dibenzofurans
PCE	tetrachloroethene
PCMIA	Personal Computer Memory Card International Association
PCP	pentachlorophenol
PCR	polymerase chain reaction
PDA	Personal Digital Assistant
PDB	polyethylene diffusive bag sampler
PDF	Portable Document Format
PDS	Personnel Decontamination System
PDT	Project Delivery Team
PEC	probable effect concentration
PEF	particulate emission factor
PEL	permissible exposure limit
PELA	P.E. LaMoreaux and Associates, Inc.
PERA	preliminary ecological risk assessment
PERC	perchloroethene
PES	potential explosive site
Pest.	pesticides
PETN	pentaerythritol tetranitrate
PFO	palustrine forested wetland
PFT	portable flamethrower
PG	professional geologist
pg/g	picograms per gram
PgM	program manager
pH	measure of acidity/alkalinity; hydrogen ion activity (negative of the logarithm, base 10)
PID	photoionization detector
PIEZ	piezometer
PINS	portable isotopic neutron microscopy
PK	packer
PLS	Professional Land Surveyor
PLS	Professional (licensed) Land Surveyor
PM	project manager
PMC	Program Management Contract
PNMSCM	Product Manager for Non-Stockpile Chemical Materiel
PMP	Project Management Plan
PMTP	Program Management Team Plan
POC	point of contact
POL	petroleum, oils, and lubricants
POTW	publicly owned treatment works
POW	prisoner of war; palustrine open water
Powell	John Powell Chemical Company
PP	Proposed Plan
ppb	parts per billion
ppbv	parts per billion by volume
PPE	personal protective equipment
ppm	parts per million
PPMP	Print Plant Motor Pool
PPRTV	provisional peer-reviewed toxicity values
ppt	parts per trillion
ppT	parts per thousand
PQL	practical quantitation limit
PR	potential risk
PRA	preliminary risk assessment
PRE	preliminary risk evaluation
PRG	preliminary remediation goal
PRO	petroleum range organics
PS	chloropicrin
PSA	potential source area
PSL	preliminary screening level
PSS	palustrine scrub shrub
PSSC	potential site-specific chemical
PSV	preliminary screening value
pt	peat or other highly organic silts

List of Abbreviations and Acronyms
Redstone Arsenal, Madison County, Alabama

Acronym	Definition
PT1	an incendiary mixture in munitions
PTFE	Polytetrafluoroethylene (Teflon)
PTMP	program team management plan
PTSM	principal threat source material
PVC	polyvinyl chloride
PWS	performance work statement
PZ	piezometer
QA	quality assurance
QA/QC	quality assurance/quality control
QAM	quality assurance manual
QAO	quality assurance officer
QAPP	quality assurance project plan
QASAS	Quality Assurance Specialist Ammunition Surveillance
QASP	Quality Assurance Surveillance Plan
QC	quality control
QCP	quality control plan
QCSM	Quality Control Site Manager
QCSR	quality control summary report
Q-D	quantity-distance
QL	quantitation limit
QP	Qualified Person
Q-Q	quantile-quantile
QSAR	quantitative structure-activity relationship
QSM	quality systems manual
QST	QST Environmental, Inc.
qty	quantity
Qual	qualifier
QuickSilver	QuickSilver Analytics, Inc.
R	when used as a validation qualifier, R means rejected; when used as a lab qualifier, R means resample; when used in text, R means retardation factor
R&A	relevant and appropriate
R^2	coefficient of determination
RA	remedial action
RA(O)	remedial action (operations)
RAO	remedial action objective
RAP	recommended action plan
RAR	remedial action report
RARE	Redstone Arsenal Rocket Engine
RAWP	remedial action work plan
Raytheon	Raytheon Company
RBA	relative bioavailability
RBC	risk-based concentration
RBP	Rapid Bioassessment Protocol
RBRG	risk-based remedial goal
RBSC	risk-based screening concentration
$RBSC_I$	risk-based screening concentration for industrial soil
$RBSC_R$	risk-based screening concentration for residential soil
$RBSC_T$	risk-based screening concentration for tap water
RBTL	risk-based target level
$RBTL_{coc}$	risk-based target level for a given relevant COC, receptor, and source medium
RC	representative concentration; response complete
RC_{coc}	representative concentration of the relevant COC in the given medium
RCA	root cause analysis
RCRA	Resource Conservation and Recovery Act
RCRA CA	Resource Conservation and Recovery Act Corrective Action
RCWM	Recovered Chemical Warfare Materiel
RD	remedial design
RDECOM	U.S. Army Research, Development, and Engineering Command
RDX	hexahydro-1,3,5-trinitro-1,3,5-triazine; cyclotrimethylenetrinitramine; 1,3,5-trinitro-1,3,5-triazine (cyclonite); Royal Demolition Explosive
REG	regular field sample
REL	recommended exposure limit; reference exposure level
RER	Record of Environmental Review
Rev	Revision
RF	response factor
RFA	request for analysis
RfC	reference concentration
RfD	reference dose
RFI	RCRA facility investigation
RFQ	request for quotation
RG	remedial goal
RGO	remedial goal option
RI	remedial investigation
RIP	remedy in place
RL	reporting limit
RM	risk management
RM-1	Risk Management-1
RM-2	Risk Management 2

List of Abbreviations and Acronyms
Redstone Arsenal, Madison County, Alabama

Acronym	Definition
RME	reasonable maximum exposure
RMP	risk management plan
Ro	Robertsville silt loam
ROD	Record of Decision
ROF	report of findings
ROI	radius of influence
ROP	Redstone Ordnance Plant
ROPS	roll over protection system
RPD	relative percent difference
RR	range residue
RRF	relative response factor
RRSE	Relative Risk Site Evaluation
RRSL	residential regional screening level
RS	prefix for groundwater monitoring well at Redstone Arsenal
RSA	Redstone Arsenal
RSD	relative standard deviation
RSL	Regional Screening Level
RSP	Redstone Arsenal spring
RTAP	Real-Time Analytical Platform
RTC	Redstone Test Center
RTECS	Registry of Toxic Effects of Chemical Substances
RTK	real-time kinematic
RTS	robotic total station
RTTC	Redstone Technical Test Center
Rust	Rust Environment and Infrastructure, Inc.
s/n	signal-to-noise ratio
SA	exposed skin surface area; source area
SAA	satellite accumulation area
SAC	site access control
SACIMS	Site Access Control Information Management System
SACP	Site Access Control Plan
SAD	South Atlantic Division
SAE	Society of Automotive Engineers
SAIC	Science Applications International Corporation
SAP	sampling and analysis plan
SAR	structure-activity relationship
SARA	Superfund Amendments and Reauthorization Act
SB	soil boring
SC	specific conductance
SCG	storage compatibility group
SCBA	self-contained breathing apparatus
Sch.	schedule
SCM	site conceptual model
SD	sediment
SDG	sample delivery group
SDS	safety data sheet
SDSW	sediment/surface water
SDWA	Safe Drinking Water Act
SDZ	surface danger zone
SED	Software Engineering Directorate
SEE	steam enhanced extraction
SF	cancer slope factor
SFSP	site-specific field sampling plan
SGF	standard grade fuels
Shaw	Shaw Environmental, Inc.
SHP	safety and health plan
SI	site inspection
Sil	Silurian
SIM	Selective Ion Monitoring
SIR	secondary investigation report
SL	standing liquid
SLERA	screening-level ecological risk assessment
SM	sulfur monochloride
SMDP	Scientific Management Decision Point
SMF	smoke munitions filling
SMF 3	Smoke Munitions Filling Plant 3
SMP	site management plan
SNR	signal-to-noise ratio
SO_4	sulfate
SOD	soil oxidant demand
SOP	standard operating procedure
SOPP	standard operating project procedure
SP	submersible pump
SPA	single point anomaly
SPCC	system performance calibration compound
SPCS	State Plane Coordinate System
SPLP	synthetic precipitation leaching procedure

List of Abbreviations and Acronyms
Redstone Arsenal, Madison County, Alabama

Acronym	Definition
SPM	sample planning module
SPRG	spring
SQG	sediment quality guideline
SQRT	screening quick reference tables
SRA	streamlined human health risk assessment
SRI	supplemental remedial investigation
SRM	standard reference material
SS	surface soil
SSC	site-specific chemical
SSHO	site safety and health officer
SSHP	site-specific safety and health plan
SSL	soil screening level
SSSL	site-specific screening level
SSTL	site-specific target level
SSPA	site-specific probability assessment
STB	supertropical bleach
STC	source-term concentration
STD	standard deviation
Std. units	standard units
STEL	short-term exposure limit
STP	sewage treatment plant
STL	Severn-Trent Laboratories
STT	sludge thickener tank
SU	sampling unit when used in a grid for incremental sampling; when used as a unit for pH, this acronym stands for standard unit
SUXOS	senior UXO supervisor
SV	screening value
SVE	soil vapor extraction
SVOC	semivolatile organic compound
SW-846	U.S. EPA's *Test Methods for Evaluating Solid Waste: Physical/Chemical Methods*
SW	surface water
SWCC	State of Alabama Soil and Water Conservation Committee
SWMU	solid waste management unit
SWTR	surface water
SZ	support zone
TA	test area
TAL	target analyte list
TAT	turn around time
TB	trip blank
TBC	to be considered
TBD	to be determined
TCA	trichloroethane
TCDD	2,3,7,8-tetrachlorodibenzo-p-dioxin
TCDF	tetrachlorodibenzofurans
TCE	trichloroethene
TCH	thermal conductive heating
TCL	target compound list
TCLP	toxicity characteristic leaching procedure
TCMX	tetrachloro-m-xylene
TCRA	time critical removal action
TDGCL	thiodiglycol
TDGCLA	thiodiglycol chloroacetic acid
TDS	total dissolved solids
TEA	triethylaluminum
TEC	threshold effect concentration
TeCA	1,1,2,2-tetrachloroethane
TEMP	temperature
TEMTADS	Time-Domain Electromagnetic Multisensor Tower Array Detection System
TEQ	toxic equivalency quotient
TERC	Total Environmental Restoration Contract
Tetryl	trinitrophenylmethylnitramine
TEU	Technical Escort Unit
THI	target hazard index
Thiokol	Thiokol Corporation
TIC	tentatively identified compound
TIR	thermal infrared survey
TLV	threshold limit value
TM	Technical Manual
TMP	temperature measuring point
TMPW	temporary groundwater monitoring well
TN	Tennessee
TNB	trinitrobenzene
TNT	trinitrotoluene
TO	task order
TOC	use top of casing when defining the well depth; use total organic carbon when defining a general chemistry parameter
TOI	target of interest
TOW	tube-launched, optically-tracked, wire-guided missile
TP	Technical Paper

List of Abbreviations and Acronyms
Redstone Arsenal, Madison County, Alabama

Acronym	Definition
TPH	total petroleum hydrocarbon
TPI	three-phase inspection
TPP	Technical Project Planning
TR	target cancer risk
TRADOC	U.S. Army Training and Doctrine Command
TRPH	total recoverable petroleum hydrocarbons
TRV	toxicity reference value
TSA	temporary storage area
TSCA	Toxic Substances Control Act
TSCRN	top of screen
TSDF	treatment, storage, and disposal facility
TSLC	target soil leachate concentration
TSS	total suspended solids
TTAP	treatment system tap (port)
TTZ	target treatment zone
Tu	Tupelo silt loam
TVA	Tennessee Valley Authority
TWA	time-weighted average
TXDOT	Texas Department of Transportation
TX-3	small rocket motor used for ballistics testing
U	not detected above reporting limit
U.S.	United States (of America)
UB	potential blank contamination
UCL	upper confidence limit
UCR	upper certified range
UDMH	unsymmetrical dimethyl hydrazine
UF	uncertainty factor
UFP	Uniform Federal Policy
UIC	underground injection control
UJ	not detected, estimated due to data validation anomaly
UNEP	United Nations Environment Program
UPL	upper prediction limit; upland
UR	not detected; rejected due to data validation anomaly
URF	unit risk factor
USACE	U.S. Army Corps of Engineers
USACMLS	U.S. Army Chemical School
USAEC	U.S. Army Environmental Command
USAEHA	U.S. Army Environmental Hygiene Agency
USAESCH	U.S. Army Engineering Support Center, Huntsville
USAMPS	U.S. Army Military Police School
USAPHC	U.S. Army Public Health Command
USATCES	U.S. Army Technical Center for Explosive Safety
USATEU	U.S. Army Technical Escort Unit
USATHAMA	U.S. Army Toxic and Hazardous Material Agency
USC	United States Code
USCS	Unified Soil Classification System
USDA	U.S. Department of Agriculture
USEPA	U.S. Environmental Protection Agency
USFWS	U.S. Fish and Wildlife Service
USGS	U.S. Geological Survey
UST	underground storage tank
UTL	upper tolerance limit
UTM	Universal Transverse Mercatir
UTV	utility terrain vehicle
UXO	unexploded ordnance
UXOSP	unexploded ordnance sweep personnel
UXOQCS	UXO Quality Control Supervisor
UXOSO	UXO safety officer
V	vanadium
VC	vinyl chloride
VI	vapor intrusion
VISL	vapor intrusion screening level
VOA	volatile organic analyte
VOC	volatile organic compound
VOH	volatile organic hydrocarbon
VP	soil vapor point
VQ	validation qualifier
vs	versus
VSI	visual site inspection
VSL	vapor screening level
VSP	Visual Sample Plan
VX	nerve agent (O-ethyl-S-[diisopropylaminoethyl]-methylphosphonothiolate)
WAC	Women's Army Corps
WDTA	Waste Disposal Trench Area
WNWR	Wheeler National Wildlife Refuge
WOE	weight of evidence
WP	white phosphorus

List of Abbreviations and Acronyms
Redstone Arsenal, Madison County, Alabama

Acronym	Definition
WPL	worker population limit
WQC	water quality criteria
WRS	Wilcoxon rank sum
WS	watershed
WSA	Watershed Screening Assessment
WTP	water treatment plant
WWI	World War I
WWII	World War II
WWTP	wastewater treatment plant
X	Data collected in a manner that is now considered to be inconsistent with good scientific practice. These data are considered unusable. However, since these data exist in the database, additional definitive samples may be needed to verify the presence or absence of any positively detected result.
XRF	x-ray fluorescence
yd^3	cubic yards
ZVI	zero-valent iron

TABLES

Table 2-1

Summary of Receptor Cancer Risk and Noncancer Hazard for Chemicals of Concern - RSA-227
Reasonable Maximum Exposure
RSA-227
Redstone Arsenal, Madison County, Alabama

CANCER RISK

Receptors	Total Soil IELCR	Groundwater IELCR	**CUMULATIVE RISK SOIL**	**CUMULATIVE RISK SOIL AND GROUNDWATER**
Industrial Receptors:				
Commercial Worker	1.9E-05	9.0E-06	**1.9E-05**	**2.8E-05**
Construction Worker	1.7E-06	3.6E-07	**1.7E-06**	**2.1E-06**
Hypothetical Residential Receptors:				
Child Resident [a]	1.2E-04	1.1E-05	**1.2E-04**	**1.3E-04**
Adult Resident [a]	2.5E-05	1.5E-05	**2.5E-05**	**4.0E-05**
Lifetime Resident [a]	1.5E-04	2.5E-05	**1.5E-04**	**1.7E-04**

NONCANCER HAZARD

Receptors	Total Soil HI	Groundwater HI	**CUMULATIVE HAZARD INDEX SOIL**	**CUMULATIVE HAZARD INDEX SOIL AND GROUNDWATER**
Industrial Receptors:				
Commercial Worker	0.06	1.28	**0.06**	**1.34**
Construction Worker	0.12	1.37	**0.12**	**1.49**
Hypothetical Residential Receptors:				
Child Resident [a]	0.84	5.13	**0.84**	**5.97**

Source: RSA-227 RFI Report (CB&I, 2015a).

[a] Risk associated with the hypothetical residential receptor; child and adult resident risk are summed to estimate the cancer risk for the lifetime resident. Noncancer hazard estimates are based on the hypothetical child resident only.

COC - Chemicals of concern.

HI - Hazard index.

IELCR - Individual excess lifetime cancer risk.

NA - Not applicable.

Table 2-2

Summary of Receptor Cancer Risk and Noncancer Hazard for Chemicals of Concern - Ditch
Reasonable Maximum Exposure
RSA-227
Redstone Arsenal, Madison County, Alabama

CANCER RISK

Receptors	Total Soil IELCR	Groundwater IELCR	**CUMULATIVE RISK SOIL**	**CUMULATIVE RISK SOIL AND GROUNDWATER**
Industrial Receptors:				
Commercial Worker	1.3E-05	9.0E-06	**1.3E-05**	**2.2E-05**
Construction Worker	1.0E-06	3.6E-07	**1.0E-06**	**1.4E-06**
Hypothetical Residential Receptors:				
Child Resident [a]	9.6E-05	1.1E-05	**9.6E-05**	**1.1E-04**
Adult Resident [a]	1.6E-05	1.5E-05	**1.6E-05**	**3.1E-05**
Lifetime Resident [a]	1.1E-04	2.5E-05	**1.1E-04**	**1.4E-04**

NONCANCER HAZARD

Receptors	Total Soil HI	Groundwater HI	**CUMULATIVE HAZARD INDEX SOIL**	**CUMULATIVE HAZARD INDEX SOIL AND GROUNDWATER**
Industrial Receptors:				
Commercial Worker	0.03	1.28	**0.03**	**1.31**
Construction Worker	0.05	1.37	**0.05**	**1.42**
Hypothetical Residential Receptors:				
Child Resident [a]	0.37	5.13	**0.37**	**5.50**

Source: RSA-227 RFI Report (CB&I, 2015a).

[a] Risk associated with the hypothetical residential receptor; child and adult resident risk are summed to estimate the cancer risk for the lifetime resident. Noncancer hazard estimates are based on the hypothetical child resident only.

COC - Chemicals of concern.

HI - Hazard index.

IELCR - Individual excess lifetime cancer risk.

NA - Not applicable.

Table 2-3

Conclusions of the ARBCA RM-2 Evaluation - RSA-227 and Ditch
RSA-227
Redstone Arsenal, Madison County, Alabama

Receptors	Exposure to RSA-227 or Ditch Soil [a]	Relevant COCs in RSA-227 Soil [b,c]	Relevant COCs in Ditch Soil [b,c]	COCs for Exposure to Groundwater [c,d]
Commercial Worker	X	Arsenic Benzo(a)pyrene Dibenz(a,h)anthracene	Arsenic Benzo(a)pyrene	Benzo(a)anthracene[e] 1,1-Dichloroethene[f] Trichloroethene
Construction Worker	√	(None)	(None)	Trichloroethene
Hypothetical Resident	X	Arsenic Benzo(a)anthracene Benzo(a)pyrene Benzo(b)fluoranthene Dibenz(a,h)anthracene Indeno(1,2,3-cd)pyrene	Arsenic Benzo(a)anthracene Benzo(a)pyrene Benzo(b)fluoranthene Dibenz(a,h)anthracene Indeno(1,2,3-cd)pyrene	Benzo(a)anthracene[e] 1,1-Dichloroethene[f] Trichloroethene

Source: RSA-227 RFI Report (CB&I, 2015a).
Notes:

√ Cumulative cancer risk and noncancer hazard were found to be acceptable.

X Cumulative cancer risk and noncancer hazard were found to be unacceptable.

[a] Risk conclusions exclude inorganics found to be naturally occurring.

[b] Conclusions regarding risk and identification of relevant COCs in soil exclude consideration of contribution of risk from exposure to groundwater.

[c] Includes only those relevant COCs for receptors whose cumulative total risk is greater than 1×10^{-5}, unless otherwise indicated.

[d] Chemicals with maximum detected concentrations below their maximum contaminant levels are not included as COCs for exposure to groundwater.

[e] Chemical excluded as a relevant COC as subsequent sample from sole location of detection was nondetect.

[f] Chemical hazard quotient is below 1. Chemical is identified as a relevant COC because the maximum detected concentration is above the maximum contaminant level.

COC - Chemical of concern.

RM-2 - Risk-Management-2.

Table 3-1

Derivation of Soil Cleanup Goals for Direct Exposure - Hypothetical Resident
RSA-227
Redstone Arsenal, Madison County, Alabama

COC	RC (mg/kg)	Sum of IELCR	Target Cancer Risk	Residential CG[a] (mg/kg)
Benzo(a)pyrene equivalents[b]	1.26	2.03E-05	1.00E-05	0.62
SUM			**1.00E-05**	

CG - Cleanup goal.
COC - Chemical of concern.
RC - Representative concentration of total soil taken from the RFI (CB&I, 2015a).
IELCR- Incremental excess lifetime cancer risk.
[a] No CGs are based on noncancer hazard.
[b] Residential CG based on achievement of target risk: shown to two significant figures.

Table 3-2

Summary of Cleanup Goals
RSA-227
Redstone Arsenal, Madison County, Alabama

COC	CG (mg/kg)		Basis
	Surface Soil	Subsurface Soil	
Arsenic	15	18	BSV
Benzo(a)pyrene equivalents	0.62	0.62	Risk*

Notes:

* See Table 3-1

BSV - Background screening value.

CG - Cleanup goal.

COC - Chemical of concern.

mg/kg - Milligrams per kilogram.

Table 3-3

Benzo(a)pyrene Equivalent Cleanup Goal Evaluation
RSA-227
Redstone Arsenal, Madison County, Alabama

Location_Code	Sample Date	Start Depth	End Depth	Sample No.	Parameter	Result	Units	Detect	Vqual	Detection Limit	Result	Toxicity Equivalence Factor	BaP Equiv Result	Exceed CG BaP equiv (0.62 mg/kg)?	Notes
14702I03-HP02	8-Jun-04	0	1	PSC0250	Benzo(a)anthracene	0.19	mg/kg	Y	J	0.11	0.19	0.1	0.019		
14702I03-HP02	8-Jun-04	0	1	PSC0250	Benzo(a)pyrene	0.23	mg/kg	Y	J	0.11	0.23	1	0.23		
14702I03-HP02	8-Jun-04	0	1	PSC0250	Benzo(b)fluoranthene	0.34	mg/kg	Y	J	0.11	0.34	0.1	0.034		
14702I03-HP02	8-Jun-04	0	1	PSC0250	Dibenz(a,h)anthracene	0.37	mg/kg	N	U	0.11	0.11	1	0.11		
14702I03-HP02	8-Jun-04	0	1	PSC0250	Indeno(1,2,3-cd)pyrene	0.37	mg/kg	N	U	0.16	0.16	0.1	0.016		
												Total	0.409	NO	
227-RS1870	29-May-12	10	12	AEM0020	Benzo(a)anthracene	0.076	mg/kg	Y		0.00051	0.076	0.1	0.0076		
227-RS1870	29-May-12	10	12	AEM0020	Benzo(a)pyrene	0.074	mg/kg	Y		0.00051	0.074	1	0.074		
227-RS1870	29-May-12	10	12	AEM0020	Benzo(b)fluoranthene	0.087	mg/kg	Y		0.00051	0.087	0.1	0.0087		
227-RS1870	29-May-12	10	12	AEM0020	Dibenz(a,h)anthracene	0.012	mg/kg	Y		0.00051	0.012	1	0.012		
227-RS1870	29-May-12	10	12	AEM0020	Indeno(1,2,3-cd)pyrene	0.043	mg/kg	Y		0.00051	0.043	0.1	0.0043		
												Total	0.1066	NO	
227-RS1870	29-May-12	16	18	AEM0021	Benzo(a)anthracene	0.0046	mg/kg	Y		0.0005	0.0046	0.1	0.00046		
227-RS1870	29-May-12	16	18	AEM0021	Benzo(a)pyrene	0.0046	mg/kg	Y		0.0005	0.0046	1	0.0046		
227-RS1870	29-May-12	16	18	AEM0021	Benzo(b)fluoranthene	0.0058	mg/kg	Y		0.0005	0.0058	0.1	0.00058		
227-RS1870	29-May-12	16	18	AEM0021	Dibenz(a,h)anthracene	0.0041	mg/kg	N	U	0.0005	0.0005	1	0.0005		
227-RS1870	29-May-12	16	18	AEM0021	Indeno(1,2,3-cd)pyrene	0.0029	mg/kg	Y	J	0.0005	0.0029	0.1	0.00029		
												Total	0.00643	NO	
227-RS1870	29-May-12	25	27	AEM0022	Benzo(a)anthracene	0.016	mg/kg	Y		0.00048	0.016	0.1	0.0016		
227-RS1870	29-May-12	25	27	AEM0022	Benzo(a)pyrene	0.014	mg/kg	Y		0.00048	0.014	1	0.014		
227-RS1870	29-May-12	25	27	AEM0022	Benzo(b)fluoranthene	0.017	mg/kg	Y		0.00048	0.017	0.1	0.0017		
227-RS1870	29-May-12	25	27	AEM0022	Dibenz(a,h)anthracene	0.0024	mg/kg	Y	J	0.00048	0.0024	1	0.0024		
227-RS1870	29-May-12	25	27	AEM0022	Indeno(1,2,3-cd)pyrene	0.0079	mg/kg	Y		0.00048	0.0079	0.1	0.00079		
												Total	0.02049	NO	
227-RS1870	29-May-12	4	6	AEM0019	Benzo(a)anthracene	0.053	mg/kg	Y		0.00049	0.053	0.1	0.0053		
227-RS1870	29-May-12	4	6	AEM0019	Benzo(a)pyrene	0.046	mg/kg	Y		0.00049	0.046	1	0.046		
227-RS1870	29-May-12	4	6	AEM0019	Benzo(b)fluoranthene	0.057	mg/kg	Y		0.00049	0.057	0.1	0.0057		
227-RS1870	29-May-12	4	6	AEM0019	Dibenz(a,h)anthracene	0.0077	mg/kg	Y		0.00049	0.0077	1	0.0077		
227-RS1870	29-May-12	4	6	AEM0019	Indeno(1,2,3-cd)pyrene	0.029	mg/kg	Y		0.00049	0.029	0.1	0.0029		
												Total	0.0676	NO	
227-RS1871	29-May-12	10	12	AEM0025	Benzo(a)anthracene	0.0016	mg/kg	Y	J	0.00048	0.0016	0.1	0.00016		
227-RS1871	29-May-12	10	12	AEM0025	Benzo(a)pyrene	0.0039	mg/kg	N	U	0.00048	0.00048	1	0.00048		
227-RS1871	29-May-12	10	12	AEM0025	Benzo(b)fluoranthene	0.0039	mg/kg	N	U	0.00048	0.00048	0.1	0.000048		
227-RS1871	29-May-12	10	12	AEM0025	Dibenz(a,h)anthracene	0.0039	mg/kg	N	U	0.00048	0.00048	1	0.00048		
227-RS1871	29-May-12	10	12	AEM0025	Indeno(1,2,3-cd)pyrene	0.0039	mg/kg	N	U	0.00048	0.00048	0.1	0.000048		
												Total	0.001216	NO	
227-RS1871	29-May-12	23	25	AEM0027	Benzo(a)anthracene	0.002	mg/kg	Y	J	0.00049	0.002	0.1	0.0002		
227-RS1871	29-May-12	23	25	AEM0027	Benzo(a)pyrene	0.0016	mg/kg	Y	J	0.00049	0.0016	1	0.0016		
227-RS1871	29-May-12	23	25	AEM0027	Benzo(b)fluoranthene	0.002	mg/kg	Y	J	0.00049	0.002	0.1	0.0002		
227-RS1871	29-May-12	23	25	AEM0027	Dibenz(a,h)anthracene	0.004	mg/kg	N	U	0.00049	0.00049	1	0.00049		
227-RS1871	29-May-12	23	25	AEM0027	Indeno(1,2,3-cd)pyrene	0.004	mg/kg	N	U	0.00049	0.00049	0.1	0.000049		
												Total	0.002539	NO	

Table 3-3

Benzo(a)pyrene Equivalent Cleanup Goal Evaluation
RSA-227
Redstone Arsenal, Madison County, Alabama

Location_Code	Sample Date	Start Depth	End Depth	Sample No.	Parameter	Result	Units	Detect	Vqual	Detection Limit	Result	Toxicity Equivalence Factor	BaP Equiv Result	Exceed CG BaP equiv (0.62 mg/kg)?	Notes
227-RS1943	30-May-12	10	12	AEM0031	Benzo(a)anthracene	0.0038	mg/kg	Y	J	0.00051	0.0038	0.1	0.00038		
227-RS1943	30-May-12	10	12	AEM0031	Benzo(a)pyrene	0.0034	mg/kg	Y	J	0.00051	0.0034	1	0.0034		
227-RS1943	30-May-12	10	12	AEM0031	Benzo(b)fluoranthene	0.0038	mg/kg	Y	J	0.00051	0.0038	0.1	0.00038		
227-RS1943	30-May-12	10	12	AEM0031	Dibenz(a,h)anthracene	0.0042	mg/kg	N	U	0.00051	0.00051	1	0.00051		
227-RS1943	30-May-12	10	12	AEM0031	Indeno(1,2,3-cd)pyrene	0.0021	mg/kg	Y	J	0.00051	0.0021	0.1	0.00021		
												Total	0.00488	NO	
227-RS1943	30-May-12	4	6	AEM0029	Benzo(a)anthracene	0.0029	mg/kg	Y	J	0.00049	0.0029	0.1	0.00029		
227-RS1943	30-May-12	4	6	AEM0029	Benzo(a)pyrene	0.0025	mg/kg	Y	J	0.00049	0.0025	1	0.0025		
227-RS1943	30-May-12	4	6	AEM0029	Benzo(b)fluoranthene	0.0033	mg/kg	Y	J	0.00049	0.0033	0.1	0.00033		
227-RS1943	30-May-12	4	6	AEM0029	Dibenz(a,h)anthracene	0.0041	mg/kg	N	U	0.00049	0.00049	1	0.00049		
227-RS1943	30-May-12	4	6	AEM0029	Indeno(1,2,3-cd)pyrene	0.0021	mg/kg	Y	J	0.00049	0.0021	0.1	0.00021		
												Total	0.00382	NO	
227-RS1943	30-May-12	0	1	AEM0028	Benzo(a)anthracene	0.0024	mg/kg	Y	J	0.00048	0.0024	0.1	0.00024		
227-RS1943	30-May-12	0	1	AEM0028	Benzo(a)pyrene	0.0028	mg/kg	Y	J	0.00048	0.0028	1	0.0028		
227-RS1943	30-May-12	0	1	AEM0028	Benzo(b)fluoranthene	0.004	mg/kg	Y		0.00048	0.004	0.1	0.0004		
227-RS1943	30-May-12	0	1	AEM0028	Dibenz(a,h)anthracene	0.004	mg/kg	N	U	0.00048	0.00048	1	0.00048		
227-RS1943	30-May-12	0	1	AEM0028	Indeno(1,2,3-cd)pyrene	0.0024	mg/kg	Y	J	0.00048	0.0024	0.1	0.00024		
												Total	0.00416	NO	
227-SB001	31-May-12	4	6	AEM0002	Benzo(a)anthracene	0.022	mg/kg	Y	J	0.0005	0.022	0.1	0.0022		
227-SB001	31-May-12	4	6	AEM0002	Benzo(a)pyrene	0.02	mg/kg	Y	J	0.0005	0.02	1	0.02		
227-SB001	31-May-12	4	6	AEM0002	Benzo(b)fluoranthene	0.025	mg/kg	Y	J	0.0005	0.025	0.1	0.0025		
227-SB001	31-May-12	4	6	AEM0002	Dibenz(a,h)anthracene	0.0033	mg/kg	Y	J	0.0005	0.0033	1	0.0033		
227-SB001	31-May-12	4	6	AEM0002	Indeno(1,2,3-cd)pyrene	0.012	mg/kg	Y	J	0.0005	0.012	0.1	0.0012		
												Total	0.0292	NO	
227-SB001	31-May-12	0	1	AEM0001	Benzo(a)anthracene	0.0023	mg/kg	Y	J	0.00046	0.0023	0.1	0.00023		No PAH COCs were detected.
227-SB001	31-May-12	0	1	AEM0001	Benzo(a)pyrene	0.0019	mg/kg	Y	J	0.00046	0.0019	1	0.0019		
227-SB001	31-May-12	0	1	AEM0001	Benzo(b)fluoranthene	0.0027	mg/kg	Y	J	0.00046	0.0027	0.1	0.00027		
227-SB001	31-May-12	0	1	AEM0001	Dibenz(a,h)anthracene	0.0038	mg/kg	N	U	0.00046	0.00046	1	0.00046		
227-SB001	31-May-12	0	1	AEM0001	Indeno(1,2,3-cd)pyrene	0.0019	mg/kg	Y	J	0.00046	0.0019	0.1	0.00019		
												Total	0.00305	NO	
227-SB003	3-Jan-13	16	18	AEM0043	Benzo(a)anthracene	0.00774	mg/kg	N	U	0.00194	0.00194	0.1	0.000194		
227-SB003	3-Jan-13	16	18	AEM0043	Benzo(a)pyrene	0.00774	mg/kg	N	U	0.00194	0.00194	1	0.00194		
227-SB003	3-Jan-13	16	18	AEM0043	Benzo(b)fluoranthene	0.0039	mg/kg	Y	J	0.00194	0.0039	0.1	0.00039		
227-SB003	3-Jan-13	16	18	AEM0043	Dibenz(a,h)anthracene	0.00774	mg/kg	N	U	0.00194	0.00194	1	0.00194		
227-SB003	3-Jan-13	16	18	AEM0043	Indeno(1,2,3-cd)pyrene	0.00774	mg/kg	N	U	0.00194	0.00194	0.1	0.000194		
												Total	0.004658	NO	
227-SB004	3-Jan-13	0	1	AEM0044	Benzo(a)anthracene	0.0073	mg/kg	N	U	0.00183	0.00183	0.1	0.000183		
227-SB004	3-Jan-13	0	1	AEM0044	Benzo(a)pyrene	0.0073	mg/kg	N	U	0.00183	0.00183	1	0.00183		
227-SB004	3-Jan-13	0	1	AEM0044	Benzo(b)fluoranthene	0.00644	mg/kg	Y	J	0.00183	0.00644	0.1	0.000644		
227-SB004	3-Jan-13	0	1	AEM0044	Dibenz(a,h)anthracene	0.0073	mg/kg	N	U	0.00183	0.00183	1	0.00183		
227-SB004	3-Jan-13	0	1	AEM0044	Indeno(1,2,3-cd)pyrene	0.0073	mg/kg	N	U	0.00183	0.00183	0.1	0.000183		
												Total	0.00467	NO	

Table 3-3

Benzo(a)pyrene Equivalent Cleanup Goal Evaluation
RSA-227
Redstone Arsenal, Madison County, Alabama

Location_Code	Sample Date	Start Depth	End Depth	Sample No.	Parameter	Result	Units	Detect	Vqual	Detection Limit	Result	Toxicity Equivalence Factor	BaP Equiv Result	Exceed CG BaP equiv (0.62 mg/kg)?	Notes
227-SB010	15-May-13	0	1	AEM0081	Benzo(a)anthracene	0.0296	mg/kg	Y		0.00186	0.0296	0.1	0.00296		
227-SB010	15-May-13	0	1	AEM0081	Benzo(a)pyrene	0.0277	mg/kg	Y		0.00186	0.0277	1	0.0277		
227-SB010	15-May-13	0	1	AEM0081	Benzo(b)fluoranthene	0.0299	mg/kg	Y		0.00186	0.0299	0.1	0.00299		
227-SB010	15-May-13	0	1	AEM0081	Dibenz(a,h)anthracene	0.00488	mg/kg	Y	J	0.00186	0.00488	1	0.00488		
227-SB010	15-May-13	0	1	AEM0081	Indeno(1,2,3-cd)pyrene	0.0238	mg/kg	Y		0.00186	0.0238	0.1	0.00238		
												Total	0.04091	NO	
227-SB011	15-May-13	0	1	AEM0085	Benzo(a)anthracene	0.0137	mg/kg	Y		0.00198	0.0137	0.1	0.00137		
227-SB011	15-May-13	0	1	AEM0085	Benzo(a)pyrene	0.0252	mg/kg	Y		0.00198	0.0252	1	0.0252		
227-SB011	15-May-13	0	1	AEM0085	Benzo(b)fluoranthene	0.0321	mg/kg	Y		0.00198	0.0321	0.1	0.00321		
227-SB011	15-May-13	0	1	AEM0085	Dibenz(a,h)anthracene	0.00789	mg/kg	N	U	0.00198	0.00198	1	0.00198		
227-SB011	15-May-13	0	1	AEM0085	Indeno(1,2,3-cd)pyrene	0.0241	mg/kg	Y		0.00198	0.0241	0.1	0.00241		
												Total	0.03417	NO	
227-SB012	15-May-13	0	1	AEM0087	Benzo(a)anthracene	0.0106	mg/kg	Y		0.00206	0.0106	0.1	0.00106		
227-SB012	15-May-13	0	1	AEM0087	Benzo(a)pyrene	0.0172	mg/kg	Y		0.00206	0.0172	1	0.0172		
227-SB012	15-May-13	0	1	AEM0087	Benzo(b)fluoranthene	0.0229	mg/kg	Y		0.00206	0.0229	0.1	0.00229		
227-SB012	15-May-13	0	1	AEM0087	Dibenz(a,h)anthracene	0.00821	mg/kg	N	U	0.00206	0.00206	1	0.00206		
227-SB012	15-May-13	0	1	AEM0087	Indeno(1,2,3-cd)pyrene	0.0201	mg/kg	Y		0.00206	0.0201	0.1	0.00201		
												Total	0.02462	NO	
227-SB013	15-May-13	0	1	AEM0089	Benzo(a)anthracene	0.252	mg/kg	Y	J	0.02	0.252	0.1	0.0252		
227-SB013	15-May-13	0	1	AEM0089	Benzo(a)pyrene	0.367	mg/kg	Y	J	0.02	0.367	1	0.367		
227-SB013	15-May-13	0	1	AEM0089	Benzo(b)fluoranthene	0.515	mg/kg	Y	J	0.02	0.515	0.1	0.0515		
227-SB013	15-May-13	0	1	AEM0089	Dibenz(a,h)anthracene	0.0622	mg/kg	Y	J	0.02	0.0622	1	0.0622		
227-SB013	15-May-13	0	1	AEM0089	Indeno(1,2,3-cd)pyrene	0.308	mg/kg	Y	J	0.02	0.308	0.1	0.0308		
												Total	0.5367	NO	
227-SB014	15-May-13	0	1	AEM0092	Benzo(a)anthracene	0.0898	mg/kg	Y		0.00207	0.0898	0.1	0.00898		
227-SB014	15-May-13	0	1	AEM0092	Benzo(a)pyrene	0.173	mg/kg	Y		0.00207	0.173	1	0.173		
227-SB014	15-May-13	0	1	AEM0092	Benzo(b)fluoranthene	0.203	mg/kg	Y		0.00207	0.203	0.1	0.0203		Upgradient/background ditch soil
227-SB014	15-May-13	0	1	AEM0092	Dibenz(a,h)anthracene	0.0361	mg/kg	Y		0.00207	0.0361	1	0.0361		sample associated with RSA-304
227-SB014	15-May-13	0	1	AEM0092	Indeno(1,2,3-cd)pyrene	0.16	mg/kg	Y		0.00207	0.16	0.1	0.016		
												Total	0.25438	NO	
227-SB015	15-May-13	2	4	AEM0095	Benzo(a)anthracene	0.0106	mg/kg	Y		0.00203	0.0106	0.1	0.00106		
227-SB015	15-May-13	2	4	AEM0095	Benzo(a)pyrene	0.0081	mg/kg	N	U	0.00203	0.00203	1	0.00203		
227-SB015	15-May-13	2	4	AEM0095	Benzo(b)fluoranthene	0.0081	mg/kg	N	U	0.00203	0.00203	0.1	0.000203		Upgradient/background ditch soil
227-SB015	15-May-13	2	4	AEM0095	Dibenz(a,h)anthracene	0.0081	mg/kg	N	U	0.00203	0.00203	1	0.00203		sample associated with RSA-304
227-SB015	15-May-13	2	4	AEM0095	Indeno(1,2,3-cd)pyrene	0.0081	mg/kg	N	U	0.00203	0.00203	0.1	0.000203		
												Total	0.005526	NO	
227-SB015	15-May-13	0	1	AEM0094	Benzo(a)anthracene	0.0198	mg/kg	Y		0.00194	0.0198	0.1	0.00198		
227-SB015	15-May-13	0	1	AEM0094	Benzo(a)pyrene	0.0274	mg/kg	Y		0.00194	0.0274	1	0.0274		
227-SB015	15-May-13	0	1	AEM0094	Benzo(b)fluoranthene	0.0317	mg/kg	Y		0.00194	0.0317	0.1	0.00317		
227-SB015	15-May-13	0	1	AEM0094	Dibenz(a,h)anthracene	0.00776	mg/kg	N	U	0.00194	0.00194	1	0.00194		
227-SB015	15-May-13	0	1	AEM0094	Indeno(1,2,3-cd)pyrene	0.0221	mg/kg	Y		0.00194	0.0221	0.1	0.00221		
												Total	0.0367	NO	

Table 3-3

Benzo(a)pyrene Equivalent Cleanup Goal Evaluation
RSA-227
Redstone Arsenal, Madison County, Alabama

Location_Code	Sample Date	Start Depth	End Depth	Sample No.	Parameter	Result	Units	Detect	Vqual	Detection Limit	Result	Toxicity Equivalence Factor	BaP Equiv Result	Exceed CG BaP equiv (0.62 mg/kg)?	Notes
227-SS001	30-May-12	0	1	AEM0007	Benzo(a)anthracene	0.12	mg/kg	Y		0.00046	0.12	0.1	0.012		
227-SS001	30-May-12	0	1	AEM0007	Benzo(a)pyrene	0.19	mg/kg	Y		0.00046	0.19	1	0.19		
227-SS001	30-May-12	0	1	AEM0007	Benzo(b)fluoranthene	0.29	mg/kg	Y		0.00046	0.29	0.1	0.029		
227-SS001	30-May-12	0	1	AEM0007	Dibenz(a,h)anthracene	0.042	mg/kg	Y		0.00046	0.042	1	0.042		
227-SS001	30-May-12	0	1	AEM0007	Indeno(1,2,3-cd)pyrene	0.13	mg/kg	Y		0.00046	0.13	0.1	0.013		
												Total	0.286	NO	
227-SS002	30-May-12	0	1	AEM0008	Benzo(a)anthracene	0.77	mg/kg	Y		0.0185	0.77	0.1	0.077		
227-SS002	30-May-12	0	1	AEM0008	Benzo(a)pyrene	0.8	mg/kg	Y		0.0185	0.8	1	0.8		
227-SS002	30-May-12	0	1	AEM0008	Benzo(b)fluoranthene	1.1	mg/kg	Y		0.0185	1.1	0.1	0.11		
227-SS002	30-May-12	0	1	AEM0008	Dibenz(a,h)anthracene	0.22	mg/kg	Y		0.00044	0.22	1	0.22		
227-SS002	30-May-12	0	1	AEM0008	Indeno(1,2,3-cd)pyrene	0.62	mg/kg	Y		0.00044	0.62	0.1	0.062		
												Total	1.269	YES	
227-SS003	30-May-12	0	1	AEM0009	Benzo(a)anthracene	8	mg/kg	Y		0.0185	8	0.1	0.8		
227-SS003	30-May-12	0	1	AEM0009	Benzo(a)pyrene	7.2	mg/kg	Y		0.0185	7.2	1	7.2		
227-SS003	30-May-12	0	1	AEM0009	Benzo(b)fluoranthene	8.5	mg/kg	Y		0.185	8.5	0.1	0.85		
227-SS003	30-May-12	0	1	AEM0009	Dibenz(a,h)anthracene	1.3	mg/kg	Y		0.0185	1.3	1	1.3		
227-SS003	30-May-12	0	1	AEM0009	Indeno(1,2,3-cd)pyrene	3.4	mg/kg	Y		0.0185	3.4	0.1	0.34		
												Total	10.49	YES	
227-SS004	30-May-12	0	1	AEM0011	Benzo(a)anthracene	0.18	mg/kg	Y		0.00046	0.18	0.1	0.018		
227-SS004	30-May-12	0	1	AEM0011	Benzo(a)pyrene	0.2	mg/kg	Y		0.00046	0.2	1	0.2		
227-SS004	30-May-12	0	1	AEM0011	Benzo(b)fluoranthene	0.27	mg/kg	Y		0.00046	0.27	0.1	0.027		
227-SS004	30-May-12	0	1	AEM0011	Dibenz(a,h)anthracene	0.041	mg/kg	Y		0.00046	0.041	1	0.041		
227-SS004	30-May-12	0	1	AEM0011	Indeno(1,2,3-cd)pyrene	0.12	mg/kg	Y		0.00046	0.12	0.1	0.012		
												Total	0.298	NO	
227-SS005	30-May-12	0	1	AEM0012	Benzo(a)anthracene	0.051	mg/kg	Y		0.00046	0.051	0.1	0.0051		
227-SS005	30-May-12	0	1	AEM0012	Benzo(a)pyrene	0.077	mg/kg	Y		0.00046	0.077	1	0.077		
227-SS005	30-May-12	0	1	AEM0012	Benzo(b)fluoranthene	0.15	mg/kg	Y		0.00046	0.15	0.1	0.015		
227-SS005	30-May-12	0	1	AEM0012	Dibenz(a,h)anthracene	0.018	mg/kg	Y		0.00046	0.018	1	0.018		
227-SS005	30-May-12	0	1	AEM0012	Indeno(1,2,3-cd)pyrene	0.056	mg/kg	Y		0.00046	0.056	0.1	0.0056		
												Total	0.1207	NO	
227-SS006	30-May-12	0	1	AEM0013	Benzo(a)anthracene	0.046	mg/kg	Y		0.0022	0.046	0.1	0.0046		
227-SS006	30-May-12	0	1	AEM0013	Benzo(a)pyrene	0.069	mg/kg	Y		0.0022	0.069	1	0.069		
227-SS006	30-May-12	0	1	AEM0013	Benzo(b)fluoranthene	0.12	mg/kg	Y		0.0022	0.12	0.1	0.012		
227-SS006	30-May-12	0	1	AEM0013	Dibenz(a,h)anthracene	0.018	mg/kg	Y		0.0022	0.018	1	0.018		
227-SS006	30-May-12	0	1	AEM0013	Indeno(1,2,3-cd)pyrene	0.053	mg/kg	Y		0.0022	0.053	0.1	0.0053		
												Total	0.1089	NO	
227-SS007	4-Jan-13	0	1	AEM0069	Benzo(a)anthracene	0.0948	mg/kg	Y		0.0101	0.0948	0.1	0.00948		
227-SS007	4-Jan-13	0	1	AEM0069	Benzo(a)pyrene	0.18	mg/kg	Y		0.0101	0.18	1	0.18		
227-SS007	4-Jan-13	0	1	AEM0069	Benzo(b)fluoranthene	0.33	mg/kg	Y		0.0101	0.33	0.1	0.033		
227-SS007	4-Jan-13	0	1	AEM0069	Dibenz(a,h)anthracene	0.0403	mg/kg	N	U	0.0101	0.0101	1	0.0101		
227-SS007	4-Jan-13	0	1	AEM0069	Indeno(1,2,3-cd)pyrene	0.0795	mg/kg	Y		0.0101	0.0795	0.1	0.00795		
												Total	0.24053	NO	

Table 3-3

Benzo(a)pyrene Equivalent Cleanup Goal Evaluation
RSA-227
Redstone Arsenal, Madison County, Alabama

Location_Code	Sample Date	Start Depth	End Depth	Sample No.	Parameter	Result	Units	Detect	Vqual	Detection Limit	Result	Toxicity Equivalence Factor	BaP Equiv Result	Exceed CG BaP equiv (0.62 mg/kg)?	Notes
227-SS008	4-Jan-13	0	1	AEM0070	Benzo(a)anthracene	1.42	mg/kg	Y		0.00962	1.42	0.1	0.142		
227-SS008	4-Jan-13	0	1	AEM0070	Benzo(a)pyrene	1.66	mg/kg	Y		0.00962	1.66	1	1.66		
227-SS008	4-Jan-13	0	1	AEM0070	Benzo(b)fluoranthene	2.06	mg/kg	Y		0.00962	2.06	0.1	0.206		
227-SS008	4-Jan-13	0	1	AEM0070	Dibenz(a,h)anthracene	0.0384	mg/kg	N	U	0.00962	0.00962	1	0.00962		
227-SS008	4-Jan-13	0	1	AEM0070	Indeno(1,2,3-cd)pyrene	0.73	mg/kg	Y		0.00962	0.73	0.1	0.073		
												Total	2.09062	YES	
227-SS009	4-Jan-13	0	1	AEM0071	Benzo(a)anthracene	0.101	mg/kg	Y		0.0103	0.101	0.1	0.0101		
227-SS009	4-Jan-13	0	1	AEM0071	Benzo(a)pyrene	0.199	mg/kg	Y		0.0103	0.199	1	0.199		
227-SS009	4-Jan-13	0	1	AEM0071	Benzo(b)fluoranthene	0.287	mg/kg	Y		0.0103	0.287	0.1	0.0287		
227-SS009	4-Jan-13	0	1	AEM0071	Dibenz(a,h)anthracene	0.0412	mg/kg	N	U	0.0103	0.0103	1	0.0103		
227-SS009	4-Jan-13	0	1	AEM0071	Indeno(1,2,3-cd)pyrene	0.127	mg/kg	Y		0.0103	0.127	0.1	0.0127		
												Total	0.2608	NO	
227-SS010	3-Jan-13	0	1	AEM0064	Benzo(a)anthracene	4.76	mg/kg	Y		0.00981	4.76	0.1	0.476		
227-SS010	3-Jan-13	0	1	AEM0064	Benzo(a)pyrene	4.81	mg/kg	Y		0.00981	4.81	1	4.81		
227-SS010	3-Jan-13	0	1	AEM0064	Benzo(b)fluoranthene	4.49	mg/kg	Y		0.00981	4.49	0.1	0.449		
227-SS010	3-Jan-13	0	1	AEM0064	Dibenz(a,h)anthracene	0.631	mg/kg	Y		0.00981	0.631	1	0.631		
227-SS010	3-Jan-13	0	1	AEM0064	Indeno(1,2,3-cd)pyrene	2.15	mg/kg	Y		0.00981	2.15	0.1	0.215		
												Total	6.581	YES	
227-SS011	3-Jan-13	0	1	AEM0065	Benzo(a)anthracene	0.067	mg/kg	Y	J	0.00199	0.067	0.1	0.0067		
227-SS011	3-Jan-13	0	1	AEM0065	Benzo(a)pyrene	0.129	mg/kg	Y	J	0.00199	0.129	1	0.129		
227-SS011	3-Jan-13	0	1	AEM0065	Benzo(b)fluoranthene	0.158	mg/kg	Y	J	0.00199	0.158	0.1	0.0158		
227-SS011	3-Jan-13	0	1	AEM0065	Dibenz(a,h)anthracene	0.00796	mg/kg	N	UJ	0.00199	0.00199	1	0.00199		
227-SS011	3-Jan-13	0	1	AEM0065	Indeno(1,2,3-cd)pyrene	0.0655	mg/kg	Y	J	0.00199	0.0655	0.1	0.00655		
												Total	0.16004	NO	
227-SS012	3-Jan-13	0	1	AEM0067	Benzo(a)anthracene	0.187	mg/kg	Y		0.00997	0.187	0.1	0.0187		
227-SS012	3-Jan-13	0	1	AEM0067	Benzo(a)pyrene	0.39	mg/kg	Y		0.00997	0.39	1	0.39		
227-SS012	3-Jan-13	0	1	AEM0067	Benzo(b)fluoranthene	0.576	mg/kg	Y		0.00997	0.576	0.1	0.0576		
227-SS012	3-Jan-13	0	1	AEM0067	Dibenz(a,h)anthracene	0.0398	mg/kg	N	U	0.00997	0.00997	1	0.00997		
227-SS012	3-Jan-13	0	1	AEM0067	Indeno(1,2,3-cd)pyrene	0.163	mg/kg	Y		0.00997	0.163	0.1	0.0163		
												Total	0.49257	NO	
227-SS013	4-Jan-13	0	1	AEM0068	Benzo(a)anthracene	0.133	mg/kg	Y		0.00959	0.133	0.1	0.0133		
227-SS013	4-Jan-13	0	1	AEM0068	Benzo(a)pyrene	0.257	mg/kg	Y		0.00959	0.257	1	0.257		
227-SS013	4-Jan-13	0	1	AEM0068	Benzo(b)fluoranthene	0.395	mg/kg	Y		0.00959	0.395	0.1	0.0395		
227-SS013	4-Jan-13	0	1	AEM0068	Dibenz(a,h)anthracene	0.0383	mg/kg	N	U	0.00959	0.00959	1	0.00959		
227-SS013	4-Jan-13	0	1	AEM0068	Indeno(1,2,3-cd)pyrene	0.09	mg/kg	Y		0.00959	0.09	0.1	0.009		
												Total	0.32839	NO	
F304-SB26	25-Jul-13	2	4	FZ0139	Benzo(a)anthracene	0.00215	mg/kg	Y	J	0.00202	0.00215	0.1	0.000215		
F304-SB26	25-Jul-13	2	4	FZ0139	Benzo(a)pyrene	0.00358	mg/kg	Y	J	0.00202	0.00358	1	0.00358		
F304-SB26	25-Jul-13	2	4	FZ0139	Benzo(b)fluoranthene	0.00418	mg/kg	Y	J	0.00202	0.00418	0.1	0.000418		Upgradient/background ditch soil
F304-SB26	25-Jul-13	2	4	FZ0139	Dibenz(a,h)anthracene	0.00805	mg/kg	N	UJ	0.00202	0.00202	1	0.00202		sample associated with RSA-304
F304-SB26	25-Jul-13	2	4	FZ0139	Indeno(1,2,3-cd)pyrene	0.00339	mg/kg	N	UB	0.00202	0.00202	0.1	0.000202		
												Total	0.006435	NO	

Table 3-3

Benzo(a)pyrene Equivalent Cleanup Goal Evaluation
RSA-227
Redstone Arsenal, Madison County, Alabama

Location_Code	Sample Date	Start Depth	End Depth	Sample No.	Parameter	Result	Units	Detect	Vqual	Detection Limit	Result	Toxicity Equivalence Factor	BaP Equiv Result	Exceed CG BaP equiv (0.62 mg/kg)?	Notes
F304-SB26	23-Jul-13	0	1	FZ0138	Benzo(a)anthracene	0.0916	mg/kg	Y	J	0.00983	0.0916	0.1	0.00916		Upgradient/background ditch soil sample associated with RSA-304
F304-SB26	23-Jul-13	0	1	FZ0138	Benzo(a)pyrene	0.124	mg/kg	Y	J	0.00983	0.124	1	0.124		
F304-SB26	23-Jul-13	0	1	FZ0138	Benzo(b)fluoranthene	0.203	mg/kg	Y	J	0.00983	0.203	0.1	0.0203		
F304-SB26	23-Jul-13	0	1	FZ0138	Dibenz(a,h)anthracene	0.0149	mg/kg	N	UB	0.00983	0.00983	1	0.00983		
F304-SB26	23-Jul-13	0	1	FZ0138	Indeno(1,2,3-cd)pyrene	0.0918	mg/kg	Y	J	0.00983	0.0918	0.1	0.00918		
												Total	0.17247	NO	
F304-SS22	24-Jul-13	0	1	FZ0109	Benzo(a)anthracene	0.126	mg/kg	Y	J	0.00962	0.126	0.1	0.0126		Upgradient/background ditch soil sample associated with RSA-304
F304-SS22	24-Jul-13	0	1	FZ0109	Benzo(a)pyrene	0.213	mg/kg	Y	J	0.00962	0.213	1	0.213		
F304-SS22	24-Jul-13	0	1	FZ0109	Benzo(b)fluoranthene	0.303	mg/kg	Y	J	0.00962	0.303	0.1	0.0303		
F304-SS22	24-Jul-13	0	1	FZ0109	Dibenz(a,h)anthracene	0.0495	mg/kg	Y	J	0.00962	0.0495	1	0.0495		
F304-SS22	24-Jul-13	0	1	FZ0109	Indeno(1,2,3-cd)pyrene	0.225	mg/kg	Y	J	0.00962	0.225	0.1	0.0225		
												Total	0.3279	NO	
F304-SS24	23-Jul-13	0	1	FZ0112	Benzo(a)anthracene	0.327	mg/kg	Y		0.0406	0.327	0.1	0.0327		Upgradient/background ditch soil sample associated with RSA-304
F304-SS24	23-Jul-13	0	1	FZ0112	Benzo(a)pyrene	0.52	mg/kg	Y		0.0406	0.52	1	0.52		
F304-SS24	23-Jul-13	0	1	FZ0112	Benzo(b)fluoranthene	0.649	mg/kg	Y		0.0406	0.649	0.1	0.0649		
F304-SS24	23-Jul-13	0	1	FZ0112	Dibenz(a,h)anthracene	0.108	mg/kg	Y	J	0.0406	0.108	1	0.108		
F304-SS24	23-Jul-13	0	1	FZ0112	Indeno(1,2,3-cd)pyrene	0.465	mg/kg	Y		0.0406	0.465	0.1	0.0465		
												Total	0.7721	YES	
F304-SS30	24-Jul-13	0	1	FZ0118	Benzo(a)anthracene	0.395	mg/kg	Y		0.00975	0.395	0.1	0.0395		Upgradient/background ditch soil sample associated with RSA-304
F304-SS30	24-Jul-13	0	1	FZ0118	Benzo(a)pyrene	0.71	mg/kg	Y		0.00975	0.71	1	0.71		
F304-SS30	24-Jul-13	0	1	FZ0118	Benzo(b)fluoranthene	0.72	mg/kg	Y		0.00975	0.72	0.1	0.072		
F304-SS30	24-Jul-13	0	1	FZ0118	Dibenz(a,h)anthracene	0.171	mg/kg	Y		0.00975	0.171	1	0.171		
F304-SS30	24-Jul-13	0	1	FZ0118	Indeno(1,2,3-cd)pyrene	0.612	mg/kg	Y		0.00975	0.612	0.1	0.0612		
												Total	1.0537	YES	
F304-SS32	23-Jul-13	0	1	FZ0120	Benzo(a)anthracene	0.304	mg/kg	Y		0.0203	0.304	0.1	0.0304		Upgradient/background ditch soil sample associated with RSA-304
F304-SS32	23-Jul-13	0	1	FZ0120	Benzo(a)pyrene	0.536	mg/kg	Y		0.0203	0.536	1	0.536		
F304-SS32	23-Jul-13	0	1	FZ0120	Benzo(b)fluoranthene	0.613	mg/kg	Y		0.0203	0.613	0.1	0.0613		
F304-SS32	23-Jul-13	0	1	FZ0120	Dibenz(a,h)anthracene	0.151	mg/kg	Y		0.0203	0.151	1	0.151		
F304-SS32	23-Jul-13	0	1	FZ0120	Indeno(1,2,3-cd)pyrene	0.503	mg/kg	Y		0.0203	0.503	0.1	0.0503		
												Total	0.829	YES	

Notes:

BaP Eq: Benzo(a)pyrene equivalent.

BaP Eq includes the COCs benzo(a)anthracene, benzo(a)pyrene, benzo(b)fluoranthene, dibenz(a)anthracene, and indeno(1,2,3-cd)pyrene.

Toxicity equivalence factors: benzo(a)pyrene and dibenz(a,h)anthracene = 1.0; benzo(a)anthracene), benzo(b)fluoranthene, and indeno(1,2,3-cd)pyrene = 0.1.

For calculation purposes, the detection limit is entered for reported nondetects.

Cleanup goal expressed as benzo(a)pyrene equivalents = 0.62 mg/kg.

CG - Cleanup goal.

COC - Chemical of concern.

mg/kg - Milligrams per kilogram.

PAH - Polynuclear aromatic hydrocarbon.

Table 4-1

Excavation Areas and Volumes
RSA-227
Redstone Arsenal, Madison County, Alabama

Description	Excavation Area Designation	Excavation based on Analytical Results from Soil Boring and/or Hydropunch	Contaminated Interval (feet bgs)		Total Depth (feet bgs)	Length (feet)	Width (feet)	Area (square feet)	Bank Volume (cubic feet)	Bank Volume (cubic yard)
			top	bottom						
Concrete Washrack[1]	Area A	--	--	--	1	25	15	375	375	14
Concrete Sump with Metal Grate[2]	Area B	--	--	--	5	20	10	200	1,000	38
South of Sump	Area C	14702103-HP02	0	1	2	15	10	150	300	12
South of Sump		227-SS008	0	1						
South of Sump		227-SS003	0	1						
West Ditch	Area D	227-SS001	0	1	2	25	8	200	400	15
West Ditch		227-SS002	0	1						
West Ditch		227-SS010	0	1						
South Ditch	Area E	227-SB011	0	1	2	40	8	320	640	24
South Ditch		227-SB012	0	1						
							Total	**1,245**	**2,715**	**110**

Notes

Concrete washrack is inactive and being removed from service (removed and disposed off site). Analytical results for samples collected beneath the washrack (227-SB001 and -002) were below cleanup goals.

Concrete sump is inactive and being removed from service (removed and disposed off site).

bgs - Below ground surface.

FIGURES

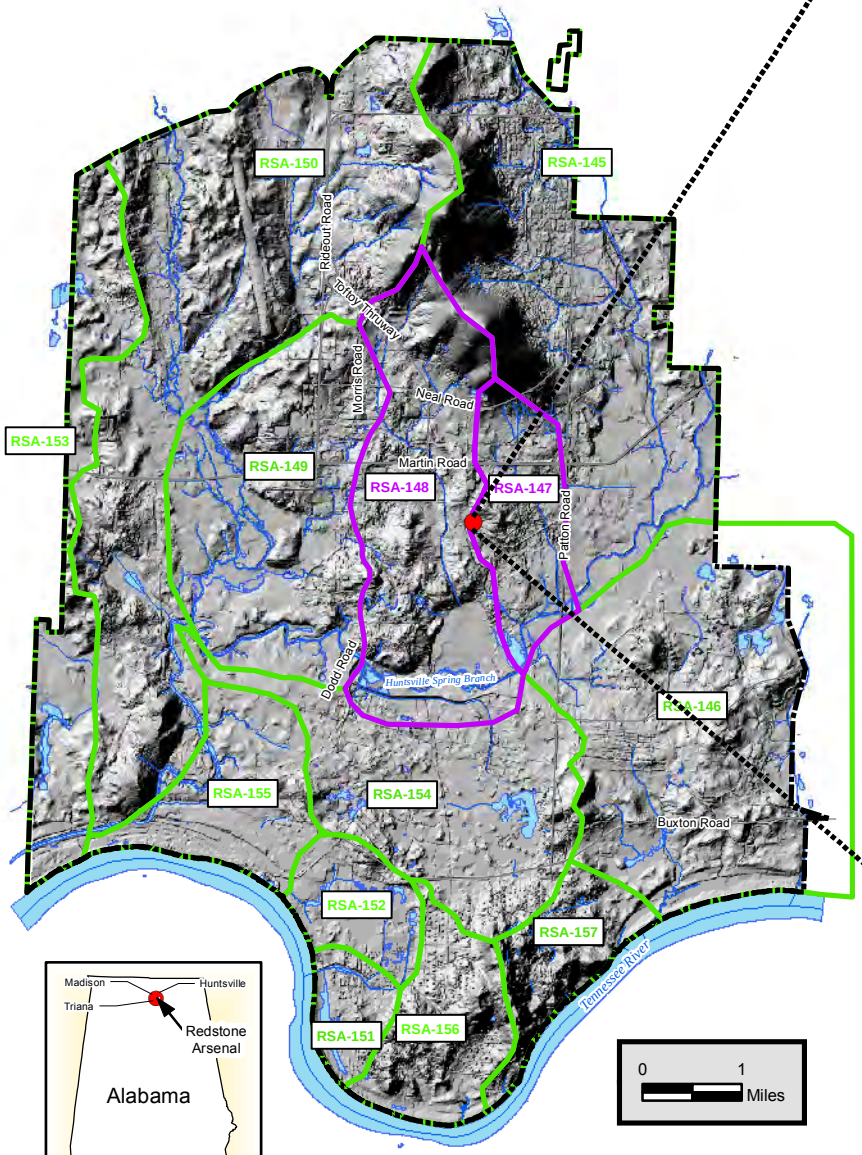

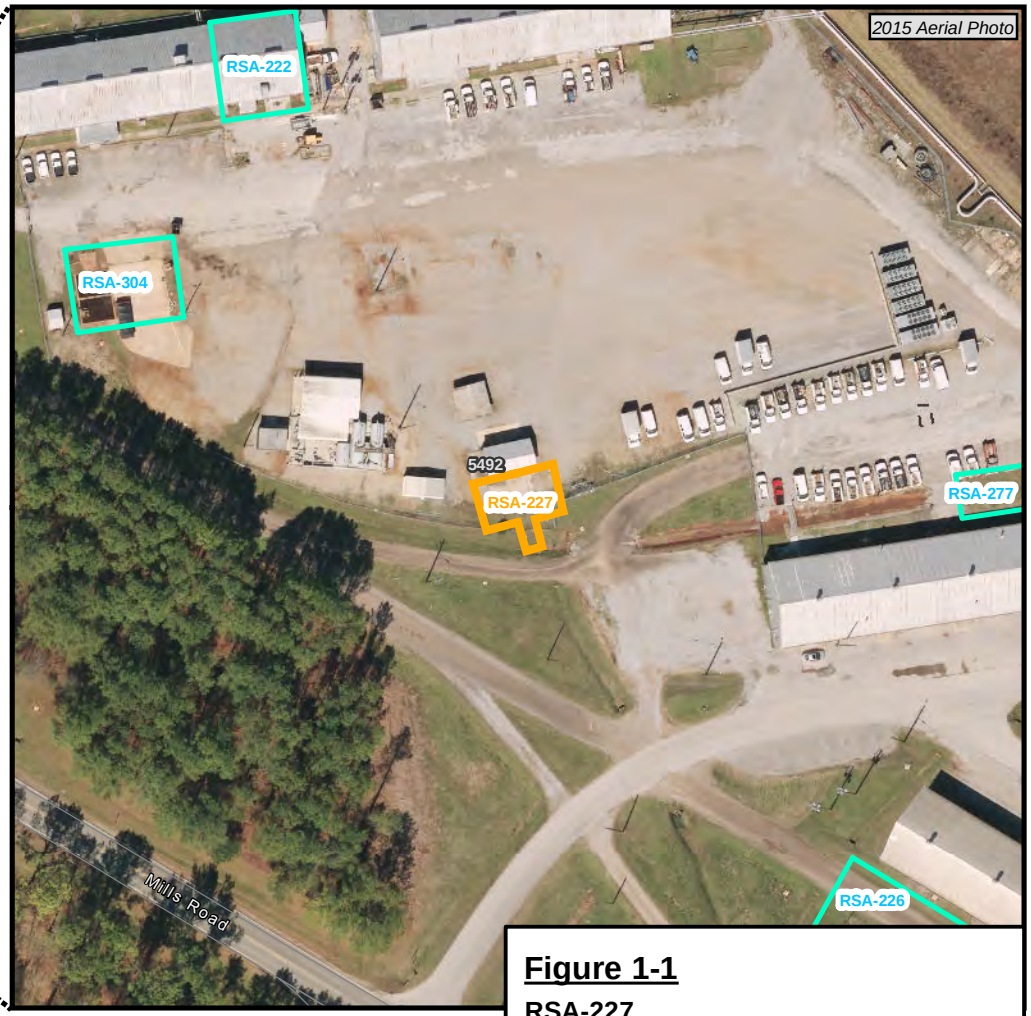

Legend

- RSA-227 Site Location
- RSA-227 Site Boundary
- Nearby Sites
- RSA-147 and RSA-148 Groundwater Unit Boundaries
- Groundwater Unit Boundaries
- RSA Installation Boundary
- Removed Structures
- Water Bodies
- Roads
- Surface Drainage Features (Some Ephemeral)

Figure 1-1

RSA-227
Site Location Map

Redstone Arsenal
Madison County, Alabama
Contract No. W91ZLK-09-D-0006

1 inch = 120 feet

0 60 120 240 Feet

NAD 1983 State Plane Alabama East Feet

CB&I Federal Services LLC

H:\Redstone\GIS_Documents\Project_maps\RSA_227\RSA_227_Draft_CMIWP_Nov2015\RSA_227_Site_Location_Map.mxd

H:\Redstone\GIS_Documents\Project_maps\RSA_227\RSA_227_Draft_CMIWP_Nov2015\RSA_227_Ditch_Site_Map.mxd

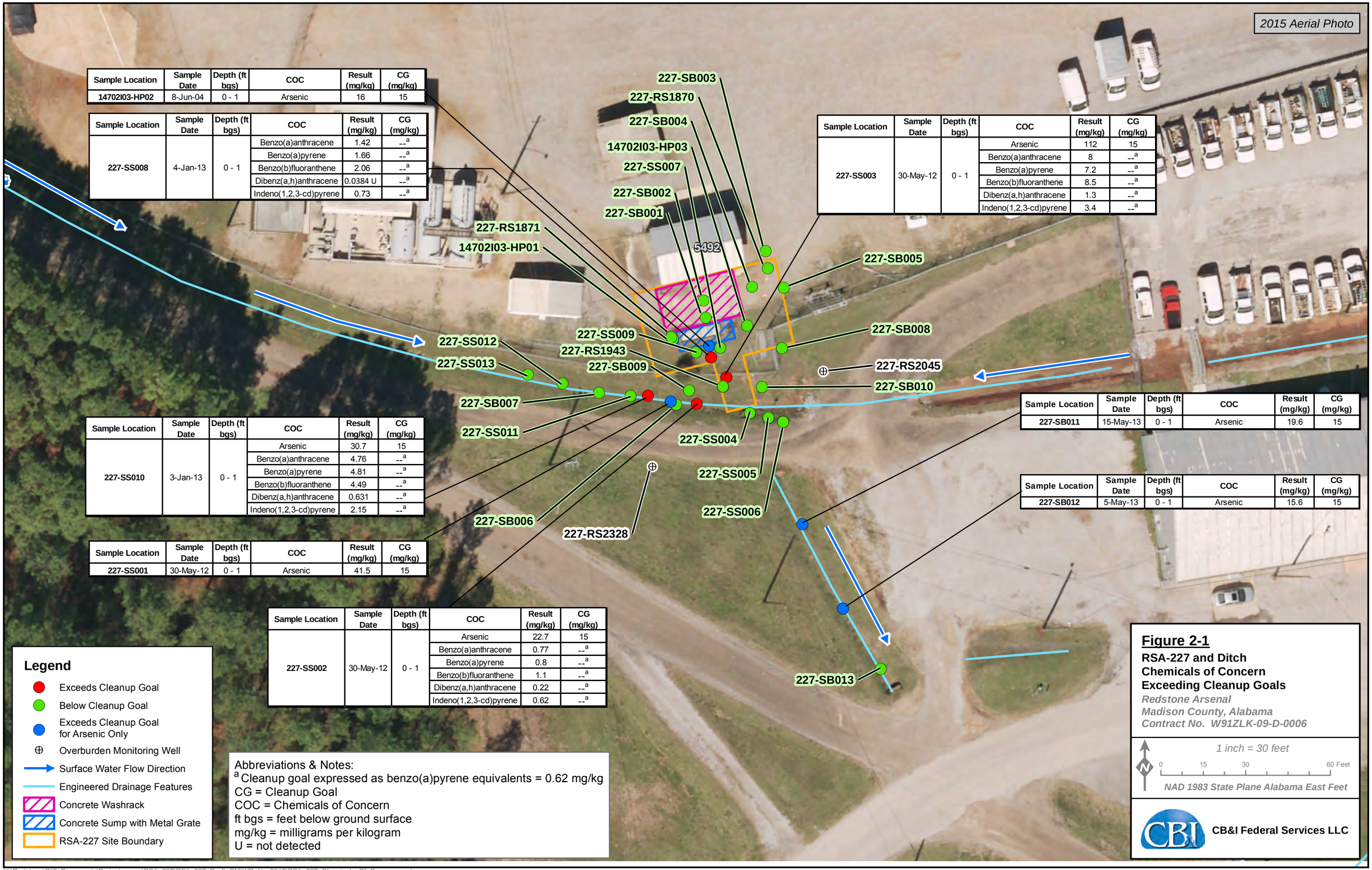

Sample Location	Sample Date	Depth (ft bgs)	COC	Result (mg/kg)	CG (mg/kg)
14702I03-HP02	8-Jun-04	0 - 1	Arsenic	16	15

Sample Location	Sample Date	Depth (ft bgs)	COC	Result (mg/kg)	CG (mg/kg)
227-SS008	4-Jan-13	0 - 1	Benzo(a)anthracene	1.42	--[a]
			Benzo(a)pyrene	1.66	--[a]
			Benzo(b)fluoranthene	2.06	--[a]
			Dibenz(a,h)anthracene	0.0384 U	--[a]
			Indeno(1,2,3-cd)pyrene	0.73	--[a]

Sample Location	Sample Date	Depth (ft bgs)	COC	Result (mg/kg)	CG (mg/kg)
227-SS003	30-May-12	0 - 1	Arsenic	112	15
			Benzo(a)anthracene	8	--[a]
			Benzo(a)pyrene	7.2	--[a]
			Benzo(b)fluoranthene	8.5	--[a]
			Dibenz(a,h)anthracene	1.3	--[a]
			Indeno(1,2,3-cd)pyrene	3.4	--[a]

Sample Location	Sample Date	Depth (ft bgs)	COC	Result (mg/kg)	CG (mg/kg)
227-SB011	15-May-13	0 - 1	Arsenic	19.6	15

Sample Location	Sample Date	Depth (ft bgs)	COC	Result (mg/kg)	CG (mg/kg)
227-SB012	5-May-13	0 - 1	Arsenic	15.6	15

Sample Location	Sample Date	Depth (ft bgs)	COC	Result (mg/kg)	CG (mg/kg)
227-SS010	3-Jan-13	0 - 1	Arsenic	30.7	15
			Benzo(a)anthracene	4.76	--[a]
			Benzo(a)pyrene	4.81	--[a]
			Benzo(b)fluoranthene	4.49	--[a]
			Dibenz(a,h)anthracene	0.631	--[a]
			Indeno(1,2,3-cd)pyrene	2.15	--[a]

Sample Location	Sample Date	Depth (ft bgs)	COC	Result (mg/kg)	CG (mg/kg)
227-SS001	30-May-12	0 - 1	Arsenic	41.5	15

Sample Location	Sample Date	Depth (ft bgs)	COC	Result (mg/kg)	CG (mg/kg)
227-SS002	30-May-12	0 - 1	Arsenic	22.7	15
			Benzo(a)anthracene	0.77	--[a]
			Benzo(a)pyrene	0.8	--[a]
			Benzo(b)fluoranthene	1.1	--[a]
			Dibenz(a,h)anthracene	0.22	--[a]
			Indeno(1,2,3-cd)pyrene	0.62	--[a]

Abbreviations & Notes:
[a] Cleanup goal expressed as benzo(a)pyrene equivalents = 0.62 mg/kg
CG = Cleanup Goal
COC = Chemicals of Concern
ft bgs = feet below ground surface
mg/kg = milligrams per kilogram
U = not detected

H:\Redstone\GIS_Documents\Project_maps\RSA_227\RSA_227_Draft_CMIWP_Nov2015\RSA_227_Chemicals_Of_Concern.mxd

Point	Easting	Northing
1	411995.64	1506769.49
2	411999.55	1506753.97
3	411995.03	1506752.45
4	411996.70	1506745.65
5	411992.80	1506744.69
6	411997.03	1506730.52
7	411988.79	1506727.75
8	411984.04	1506742.53
9	411977.29	1506740.86
10	411975.62	1506747.60
11	411972.39	1506747.14
12	411968.49	1506762.65
13	411962.88	1506728.20
14	411987.05	1506723.95
15	411986.18	1506718.20
16	411961.62	1506721.75
17	412020.63	1506685.87
18	412040.27	1506646.88
19	412034.06	1506644.14
20	412014.28	1506682.84

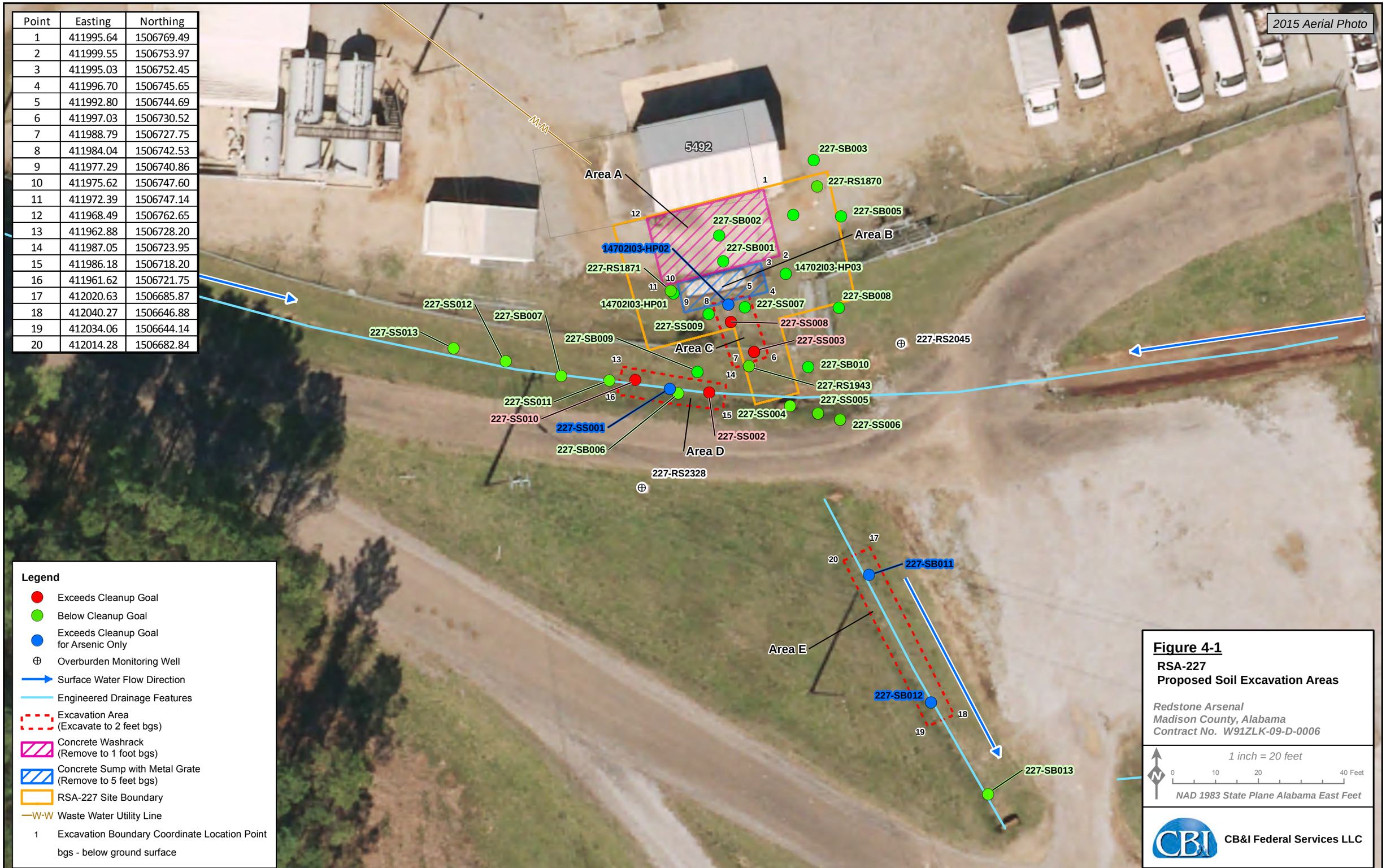

H:\Redstone\GIS_Documents\Project_maps\RSA_227\RSA_227_Draft_CMIWP_Nov2015\RSA_227_Proposed_Soil_Excavation_Areas.mxd

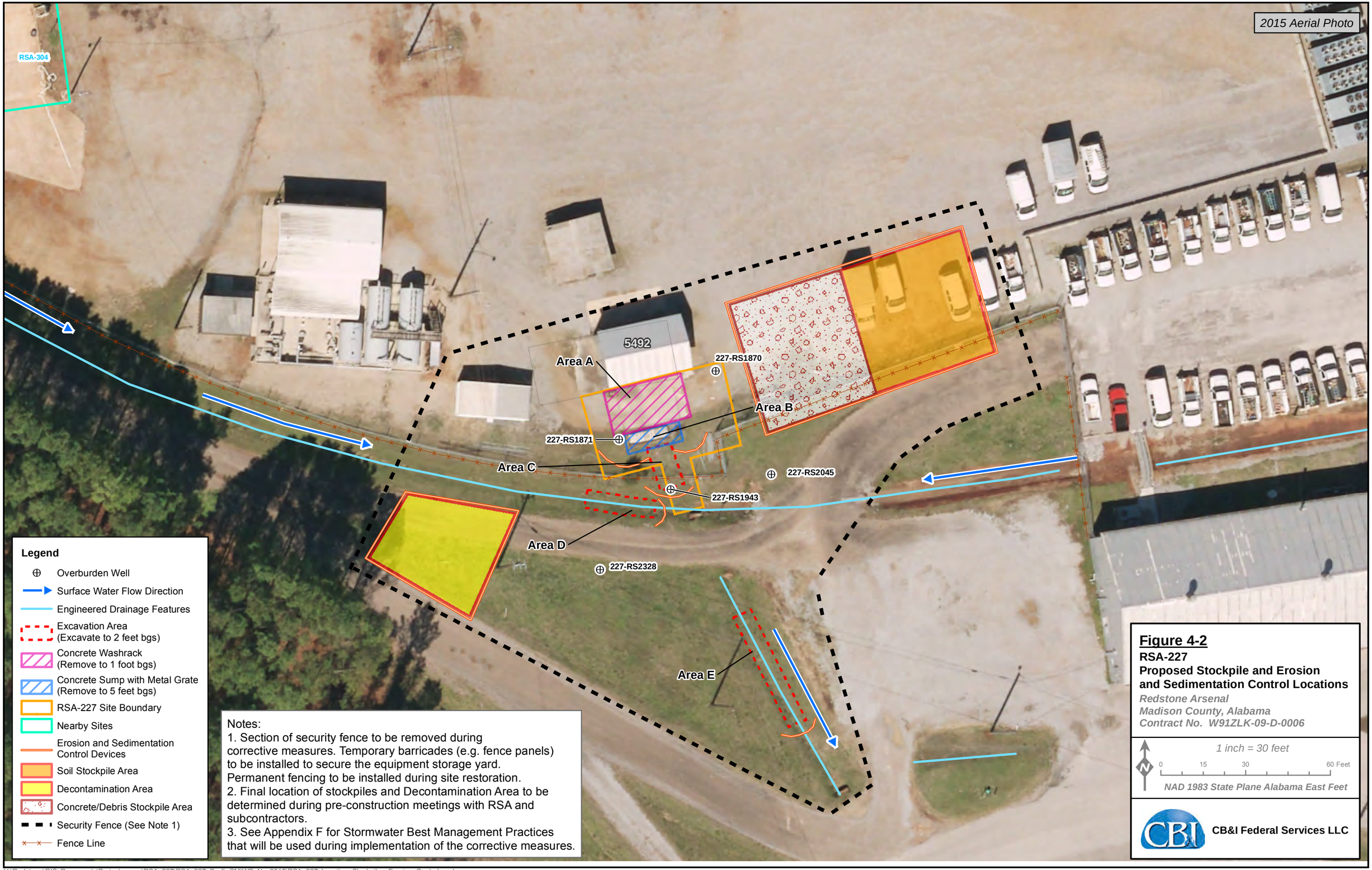

H:\Redstone\GIS_Documents\Project_maps\RSA_227\RSA_227_Draft_CMIWP_Nov2015\RSA_227_Location_Stockpiles_Erosion_Control.mxd

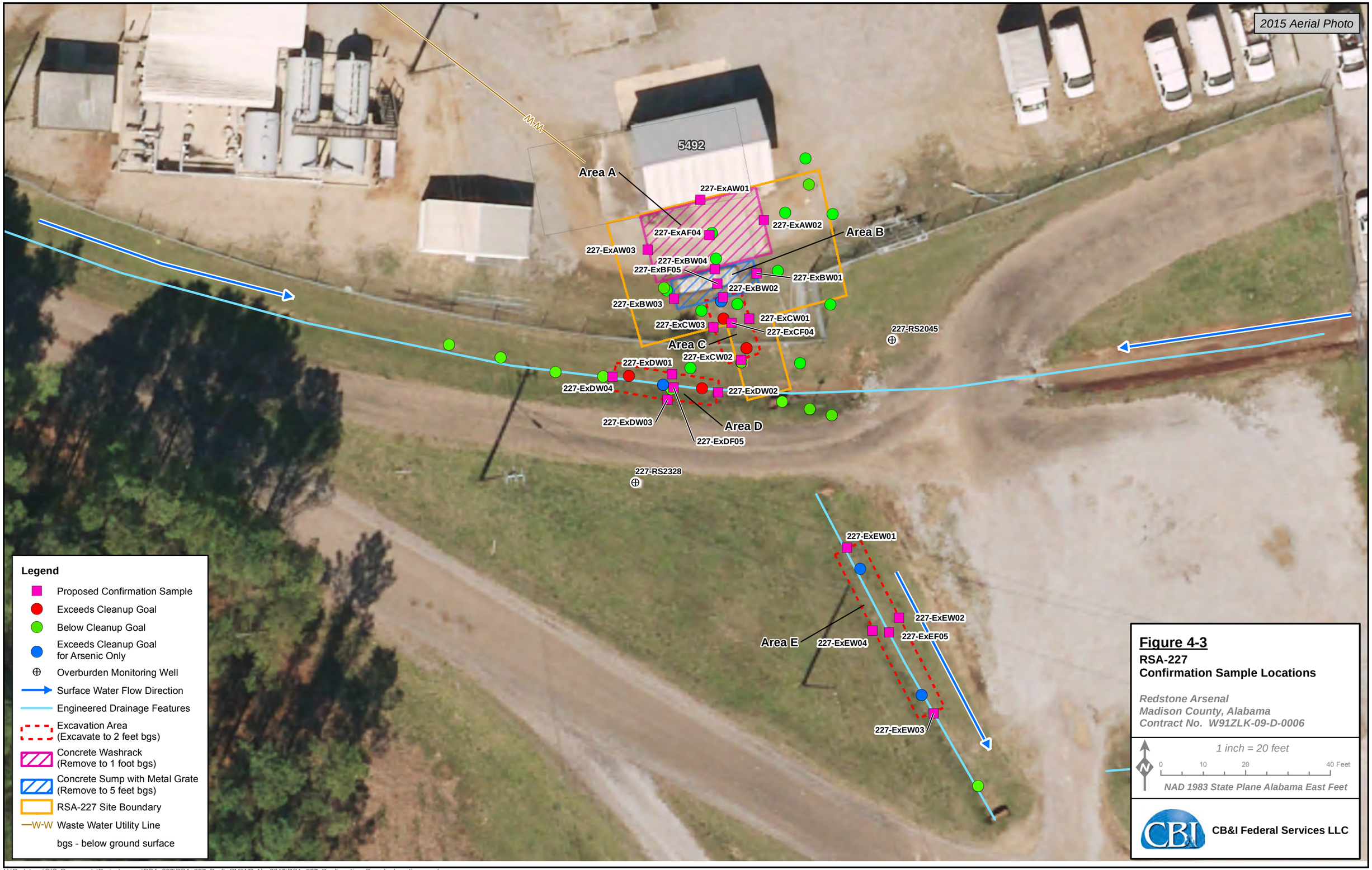

Figure 4-3
RSA-227
Confirmation Sample Locations

Redstone Arsenal
Madison County, Alabama
Contract No. W91ZLK-09-D-0006

H:\Redstone\GIS_Documents\Project_maps\RSA_227\RSA_227_Draft_CMIWP_Nov2015\RSA_227_Confirmation_Sample_Locations.mxd

● = Aliquot

Notes:
1. A minimum of one composite sample will be collected for every 5 feet of excavation depth.
2. A minimum of one composite sample will be collected for every 50 linear feet of sidewall.

Figure 4-4

RSA-227
Excavation Sidewall Confirmation Sampling Approach

Redstone Arsenal
Madison County, Alabama
Contract No. W91ZLK-09-D-0006

CB&I Federal Services LLC

\\cfsfs01.cfs.com\ArcGISProd3\Redstone\GIS_Documents\Output\RSA_227\RSA_227_CMIP_Oct2015\Figure_4_4_RSA_227_Sidewall_Conf_Sampling
Sam McCawley

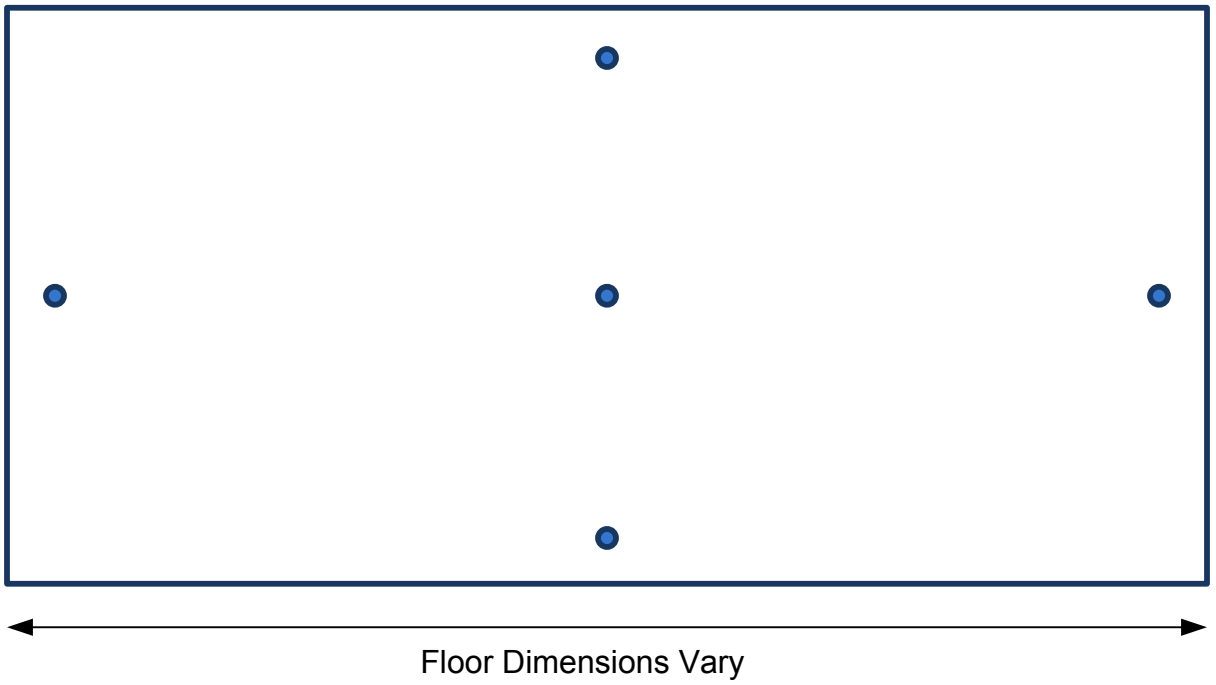

= Aliquot

Note:
1. A minimum of one composite sample will be collected for every 2,500 square feet of floor area.

Figure 4-5

RSA-227
Excavation Floor Confirmation Sampling Approach

Redstone Arsenal
Madison County, Alabama
Contract No. W91ZLK-09-D-0006

CB&I Federal Services LLC

\\cfsfs01.cfs.com\ArcGISProd3\Redstone\GIS_Documents\Output\RSA_227\RSA_227_CMIP_Oct2015\Figure_4_5_RSA_227_Excavation_Floor_Conf_Sampling
Sam McCawley

APPENDIX A

REDSTONE RCRA PERMIT MODIFICATION REQUEST

REQUEST FOR PERMIT MODIFICATION FOR RSA-227, INACTIVE WASHRACK ADJACENT TO BUILDING 5492 OPERABLE UNIT 06 U.S. ARMY GARRISON – REDSTONE MADISON COUNTY, ALABAMA March 2016

1.0 Introduction

As specified in Section VI.E.3 of the U.S. Army Garrison – Redstone Arsenal's Alabama Hazardous Wastes Management and Minimization Act Hazardous Waste Storage Facility, Thermal Treatment, Solid Waste Management Unit Corrective Action Permit, Modification No. 6 (last modified on July 6, 2015) (hereinafter referred to as the Permit) (Alabama Department of Environmental Management [ADEM], 2015), a request for permit modification is to be submitted along with a corrective measures implementation (CMI) work plan. The U.S. Army Garrison–Redstone (Army) has been directed to include this request for permit modification in an appendix to the CMI work plan. Therefore, this request for modification to the Permit has been prepared for Solid Waste Management Unit (SWMU) RSA-227, Inactive Washrack Adjacent to Building 5492, Operable Unit 06, at Redstone Arsenal (RSA) in Madison County, Alabama. ADEM provided concurrence on the Resource Conservation and Recovery Act (RCRA) facility investigation (RFI) report (CB&I Federal Services LLC [CB&I], 2015a) on October 27, 2015. The Army has prepared the CMI work plan and is ready to implement corrective measures for soil at RSA-227.

As part of the RFI report, the Army requested that ADEM move RSA-227 from Table VI.2 to Table VI.6 in the Permit and specify that corrective measures for soil occur under RSA-227 with groundwater contamination to be addressed as part of the RSA-147 groundwater unit corrective measures. This move will occur as part of the next permit modification. As specified in Section VI.E.3 of the Permit, this request for permit modification will serve to incorporate the proposed corrective measures, including all procedures necessary to implement and monitor the final corrective measures for this site, into the Permit in accordance with Alabama Administrative Code R. 335-14-8-.04(2).

2.0 Facility and Site Description

RSA is located in the southwestern portion of Madison County, which is in the northern portion of Alabama. RSA is a U.S. Army facility that encompasses approximately 38,300 acres of land, all of which are either owned or controlled by the Army (Figure 2-1).

RSA-227 occupies approximately 0.04 acre adjacent to Building 5492, north of Mills Road in the maintenance shop complex (Buildings 5494/5495). The site lies above groundwater unit RSA-147, which covers approximately 1,300 acres in the central portion of RSA.

RSA-227 includes an inactive concrete washrack and concrete sump on the south side of Building 5492 in a developed and paved area. Site drainage is controlled by an unlined drainage feature to the south of RSA-227. This drainage ditch collects runoff from the northwest of RSA-227 and the east of RSA-227 and directs the combined flow to another drainage ditch that extends south of RSA-227. The drainage ditch located outside the boundary of RSA-227 will be referred to as the Ditch in this report. Figure 2-2 shows the boundary of RSA-227 and the area of the Ditch.

No documentation is available on the date of construction of the washrack or its years of usage, according to the 2004 potential source area (PSA) investigation. However, interviews with site personnel suggest the use of the washrack ended in 1984. Subsequent to this use, the area was used as a parking area for maintenance equipment.

RSA-227 was established following the RSA-147 PSA investigation (Shaw Environmental, Inc. [Shaw], 2005). As a result of the PSA investigation process, the Army recommended the creation of RSA-227 to facilitate a more focused and thorough evaluation of the data to determine whether the operations conducted at RSA-227 contributed to environmental contamination.

3.0 Investigative History

Environmental investigations conducted at RSA-227 included the following:

- RSA-147 PSA investigation (Shaw, 2005)
- RSA-227 RCRA facility assessment (ADEM, 2008a)
- RSA-227 RFI (Shaw, 2012a,b; 2013).

An extensive historical background search of each PSA was conducted within the RSA-147 groundwater unit (Shaw, 2005). This effort included a search of historical documents (e.g., engineering drawings and inventory records), interviews with site personnel, and visual site inspections (VSI) of current (existing) and former (demolished) facilities. A limited site assessment (LSA) was conducted of PSAs. The inactive washrack adjacent to Building 5492 was included in the RSA-147 PSA investigation to determine if contaminants remaining in site media may have impacted the RSA-147 groundwater beneath RSA-227 (Shaw, 2005). During the PSA evaluation process, RSA-227 was initially identified as PSA 147-PS-02I-03.

A VSI consisting of a site visit and a review of historical documents for Building 5492 was conducted in February 2004. The VSI documented an inactive (abandoned) washrack with a sump located on the south side of Building 5492 that was still open to use. The washrack pad was used as a parking area for equipment. There did not appear to be an oil/water separator connected to the inactive washrack. The sump discharged to the south to the surface drainage. No historical information was discovered as to the dates of construction or use. The period of operation is estimated to be from 1962 to 1984.

LSA sampling was conducted at Building 5492 in June and July 2004 to determine whether contaminants were released within the site (confirm or deny the presence of contamination) based on historical activities by collecting environmental data at biased sampling locations. Based on observations during the VSI, LSA sampling targeted soil and groundwater adjacent to the sump for the inactive washrack and surface water and sediment.

The LSA field effort consisted of sampling surface and subsurface soil from three hydropunch borings (14702I03-HP01 through 14702I03-HP03), installing a temporary piezometer at each boring, and sampling groundwater from each piezometer. Three surface soil, six subsurface soil, and three groundwater samples were collected from the borings for laboratory analysis. Groundwater data from the piezometers are considered screening-level and usable for determining the presence or absence and the general magnitude of concentration of contaminants in shallow groundwater. Piezometers also help guide placement of permanent monitoring wells for collection of definitive groundwater data.

A sump wastewater sample (14702I03-SW01) and a sump waste (sediment) sample (14702I03-SD01) were both collected from the materials within the washrack sump. The PSA report (Shaw, 2005) references these as a surface water and sediment sample, respectively, collected within the washrack sump.

Soil, groundwater, sump wastewater, and sump waste samples were analyzed for target compound list (TCL) volatile organic compounds (VOC), TCL semivolatile organic compounds (SVOC) (no low-level polynuclear aromatic hydrocarbons [PAH]), petroleum range organics, and target analyte list metals. The results of the sump waste and wastewater samples are presented in Tables 2-1 and 2-2 of the RFI report and soil samples results are discussed in Chapter 3.0 of the RFI report (CB&I, 2015a).

Based on the analytical results from the LSA, the Army recommended that PSA site 147-PS-02I-03 become a new site, RSA-227, and that further investigation be performed to characterize contamination (Shaw, 2005).

ADEM evaluated RSA-227 during a 2008 VSI conducted as part of the RCRA facility assessment (ADEM, 2008a). Based on the findings of the PSA effort and high probability of releases from soils to groundwater from the abandoned washrack at RSA-227, ADEM recommended that this site continue with a remedial investigation/feasibility study (ADEM, 2008a, Section 4.2.17).

An RFI was conducted at RSA-227 in several phases from 2012 through 2013 to complete the delineation of arsenic and PAH contamination in soil from historical operations at the site (Shaw, 2012a,b; 2013). RFI activities included advancement of soil borings and installation of monitoring wells with associated sampling of surface soil, subsurface soil, and groundwater.

The RFI report concluded that the Army's historical operations at RSA-227 resulted in the release of arsenic and PAHs to soil at concentrations that pose an unacceptable risk to a future hypothetical residential receptor, the receptor scenario used to determine if unrestricted reuse of the site is warranted. The report concluded that further action was warranted for surface media. Accordingly, the Army recommended the corrective measures be implemented for arsenic- and PAH-contaminated soil at the site.

4.0 Scope of the Corrective Measures for RSA-227

The overall strategy for cleanup at RSA has been presented to the regulatory agencies in two cleanup strategy documents, the *Installation-Wide Groundwater Cleanup Strategy* (Shaw, 2009a) and the *Installation-Wide Strategy for Cleanup of Impacted Wetlands* (Shaw, 2010). The scope of the corrective measures for RSA-227 is consistent with this strategy.

The scope covered by the corrective measures at RSA-227 is surface media. Exposure to RSA-227 surface media poses no leaching threat to groundwater; however, arsenic and several PAHs in surface and subsurface soil at the site pose an unacceptable health risk to the hypothetical residential receptor (CB&I, 2015a). Thus, the Army has elected to perform corrective measures to remove and dispose of contaminated soils at the site to address this problem and avoid implementing unnecessary land-use controls to restrict future residential use of RSA-227. The corrective measures are intended as the final action for surface media, and the Army's goal is to achieve unrestricted use of the site after corrective measures implementation. No further action is expected to be required for surface media at this site following the corrective measures because any unacceptable human health threat or potential for impact to localized community-level receptors (plants) would be permanently reduced or eliminated. Groundwater corrective measures will take place in conjunction with the corrective measures required for groundwater unit RSA-147.

5.0 Site Characteristics

Topography across the site is generally flat, sloping to the southwest. No perennial water features are associated with the site, and site drainage is controlled by an unlined drainage feature to the south of the site, referred to as the Ditch. The entire site lies outside the 100-year floodplain. Figure 2-2 shows surface drainage features closest to the site.

The subsurface geologic setting beneath RSA-227 includes overburden consisting of low- to medium-permeability dark residual brown, red, reddish-brown, yellowish-red, strong brown clay with fine sands. Based on auger refusal, thickness of the residual soils (overburden) ranges from approximately 45 to 56 feet. Groundwater beneath RSA-227 occurs in the unconsolidated overburden and the upper portion of the carbonate bedrock. The water table across RSA-227 and the larger RSA-147 groundwater unit is generally flat, mimicking local topography. Overburden groundwater ranges from 18 to 39 feet below ground surface.

A conceptual site model (CSM) was developed for RSA-227 based on historical operations, available site information, and available soil and groundwater data. The most likely site-related contaminants include metals, pesticides/polychlorinated biphenyls (PCB), SVOCs, and VOCs. Although pesticides/PCBs were included in the CSM, in samples collected from well 227-RS1871 in July 2012, pesticides/PCBs and were either not detected or detected below their preliminary screening values (PSV). Subsequent groundwater samples from this well were not analyzed for pesticides/PCBs.

6.0 Investigative Results

The RSA-227 data set includes definitive and usable analytical results from 39 surface soil samples, 56 subsurface soil samples, and 13 monitoring well groundwater samples (Figure 6-1). Soil and groundwater sample analyses included VOCs, SVOCs (including low-level PAHs), metals, and pesticides/PCBs.

The nature and extent of contamination at RSA-227 has been defined and indicates the following:

Metals. The metal arsenic was detected in surface soil at RSA-227 and in the Ditch at concentrations greater than the PSV in samples where arsenic was determined not to be naturally occurring. These results have been fully delineated. All detected concentrations of metals in groundwater were determined to be naturally occurring except for one detection of cadmium from a sample collected in well 227-RS1871 on July 5, 2012. The two subsequent samples collected in February 2013 and July 2013 from well 227-RS1871 are nondetect for cadmium. As

such, cadmium is not considered to be a relevant chemical of concern (COC) for groundwater at this site. All other metals at RSA-227 and in the Ditch were determined by a site-to-background comparison to be naturally occurring or were not present at concentrations greater than their associated PSVs (CB&I, 2015a).

VOCs. No VOCs present in surface or subsurface soil at RSA-227 or surface soil at the Ditch exceed PSVs or dilution-attenuation factor (DAF) 4 soil screening levels (SSL) for leaching. Two VOCs (1,1-dichloroethene and trichloroethene [TCE]) were detected at concentrations above their PSVs in groundwater water samples. 1,1-Dichloroethene was detected at concentrations above the PSV in samples collected from well 227-RS1943 in July 2012, February 2013, and July 2013 and well 227-RS2328 in February 2013 and July 2013. TCE was detected at concentrations above the PSV in samples collected from well 227-RS1871 in February 2013 (a subsequent sample collected in July 2013 was nondetect for TCE) and well 227-RS2045 in July 2013, and was detected at a concentration below the PSV in a sample collected in February 2013.

Semivolatile Organic Compounds. The only SVOCs detected at RSA-227 and the Ditch were PAHs plus several common laboratory contaminants. Several samples in the vicinity of the washrack and the Ditch had concentrations of PAHs greater than PSVs. RSA-227 results were fully delineated to concentrations below PSVs, while results for PAHs in the Ditch surface soils were delineated to concentrations below upgradient/background locations. The PAH benzo(a)pyrene was detected in the RSA-227 subsurface soils at two locations at concentrations greater than PSVs. PAHs concentrations did not exceed PSVs in the Ditch subsurface soils.

In groundwater, one SVOC (benzo[a]anthracene) was detected in a sample collected in July 2012 from well 227-RS1870 at a concentration that exceeded the PSV. The July 2012 sample was collected immediately following well installation. The benzo(a)anthracene exceedance was not confirmed in the subsequent July 2013 sample, and no other SVOCs exceeded their PSVs.

Pesticides/Polychlorinated Biphenyls and Cyanide. No pesticides/PCBs present in surface or subsurface soil at RSA-227 or surface soil at the Ditch exceed PSVs or DAF_4 SSLs for leaching. Only one groundwater sample was analyzed for pesticides/PCBs. All pesticide/PCBs were either not detected or detected below their residential PSVs.

6.1 Fate and Transport

At RSA-227 and the Ditch, the major potential contaminant migration pathway is the dissolution of site-related chemicals from soil to form leachate and the subsequent transport to the water table resulting from the downward percolation of infiltrating rainfall. Overland transport of soil contaminants by wind or water is unlikely at RSA-227 and the Ditch because the site is relatively

level and well vegetated. The distribution of the SVOCs in the Ditch indicates that releases from RSA-304 and RSA-227 are commingled.

No contaminants present in soil pose a threat for ongoing leaching to groundwater at unacceptable levels greater than groundwater PSVs. No organic chemical present was found to be present in both surface and subsurface soils at concentrations greater than associated SSLs. Only the metal selenium was present in surface and subsurface soils at concentrations greater than associated SSLs, and this metal was not detected in groundwater. Runoff from SWMUs adjacent to the ditch feature including RSA-304 and RSA-227 may pose a migration route from on-site contamination into the ditch.

7.0 Land and Resources Use

7.1 Land Use

The current land use for this site is business. The current use of RSA-227 and the drainage ditch area is not residential, nor is it expected to be in the future. The residential scenario was included in the Alabama Risk-Based Corrective Action (ARBCA) evaluation in order to determine if this site is eligible for unrestricted reuse in accordance with ADEM requirements. In the Permit, ADEM has specified that investigations must comply with Alabama Environmental Investigation and Remediation Guidance and ARBCA guidance. In order to determine if this site is eligible for unrestricted reuse as defined in Alabama Administrative Code 335-5, risks to a residential site user were assessed.

7.2 Current Groundwater Use

Groundwater under RSA is not currently used for any potable uses. RSA's installation-wide groundwater interim record of decision (Shaw, 2007) and land-use control remedial design (Shaw, 2009b) and the Army's site access control program (Army, 2012) prevent the current use of groundwater for potable purposes and ensure that any nonpotable uses of groundwater are reviewed and evaluated by the Army prior to being permitted.

7.3 Future Groundwater Use

Through the provisions of the Army's groundwater interim record of decision (Shaw, 2007) and the Army's site access control program (Army, 2012), future groundwater resources beneath RSA-227 or elsewhere on RSA may not be developed for potable purposes, and groundwater withdrawals for nonpotable uses must be managed until remedies are selected in the final records of decision for the various groundwater units (e.g., RSA-148) within RSA. In the meantime, as part of the Permit, ADEM has required that the Army perform ongoing annual monitoring of wells located throughout the perimeter of RSA (ADEM, 2015). This ongoing monitoring will

allow the Army and ADEM to assess the rate of long-term groundwater recovery and also to ensure protection for residents living outside of the boundaries of RSA (CB&I, 2015b).

8.0 Site Risks

An ARBCA evaluation for human health and an ecological risk evaluation were performed for RSA-227 and the Ditch in accordance with the ARBCA guidance manual – Revision 2 (ADEM, 2008b) as part of the RFI (CB&I, 2015a). These evaluations addressed two separate units. RSA-227 itself was defined as one unit (RSA-227) and is represented by samples collected within the RSA-227 boundaries. The second unit (the Ditch) consists of the drainage ditch south and outside the boundaries of RSA-227. The Ditch was evaluated separately due to the potential contribution of constituents in surface water runoff from RSA-304, which is located upgradient of RSA-227. The complete ARBCA human health risk evaluation and the ecological risk evaluation are provided in the RFI report (CB&I, 2015a).

8.1 Human Health Risk

For RSA-227 soil, arsenic, benzo(a)pyrene, and dibenz(a,h)anthracene are relevant COCs for the commercial worker. Arsenic and benzo(a)pyrene are relevant COCs in Ditch soil for the commercial worker. Arsenic, benzo(a)anthracene, benzo(a)pyrene, benzo(b)fluoranthene, dibenz(a,h)anthracene, and indeno(1,2,3-cd)pyrene) are relevant COCs for the hypothetical resident receptor for both RSA-227 and Ditch soil. In groundwater, benzo(a)anthracene, 1,1-dichloroethene, and trichloroethene were determined to pose an unacceptable health risk for a commercial worker.

A preliminary screening-level indoor air vapor intrusion evaluation concluded that VOCs in soil and groundwater are unlikely to pose an unacceptable health threat to occupants in the event that buildings are erected on the site in the future.

8.2 Ecological Risk

A SLERA was completed for RSA-227 and the Ditch. The surface soil data for RSA-227 and the Ditch were compared to their respective background screening values (BSV) and ecological screening values and 11 metals and high molecular weight (HMW) PAHs were identified as requiring further evaluation. A weight-of-evidence evaluation was conducted in conjunction with community-level and food chain receptor evaluations for metals and HMW PAHs, and none of these constituents in surface soil was found to pose ecological hazards to populations of food-chain receptors. The results of the community-level assessment indicated no constituents of potential concern would be expected to impact on-site invertebrate or plant communities or

wildlife receptors, because the area of potential impact was small or because the hazard quotients were less than 1.0.

9.0 Objectives of the Corrective Measures and Cleanup Goals

The RFI (CB&I, 2015a) defined the nature and extent of contamination and evaluated potential risks to current and future receptors and concluded that exposure to soil within RSA-227 and in the Ditch was found to pose unacceptable risks to commercial workers and future hypothetical residents and that further action is required at RSA-227. In the ARBCA Risk Management-2 evaluation, arsenic and certain PAHs in soil were identified as relevant COCs warranting further action. Corrective actions are therefore needed to address soil at RSA-227 and the Ditch. Further action will be required for groundwater under RSA-227 once the action for soil is complete. For administrative purposes, separate surface sites and groundwater units have been established at RSA for evaluation and corrective measures under the RCRA regulatory process, and groundwater is also being evaluated separately under RSA-147.

The Army intends to achieve closure for soils at RSA-227 and the Ditch through the implementation of corrective measures as they are needed to protect human health.

The corrective measure objective is as follows:

- Reduce exposure of commercial and future residents to soil contaminated with arsenic and PAHs such that background conditions are achieved for arsenic and no unacceptable risk is present for PAHs. Specific actions include removal and off-site disposal of the contaminated soil.

This will be accomplished by removal and disposal of arsenic- and PAH-contaminated soil. The Army intends to achieve closure for soils at RSA-227 through the implementation of corrective measures as they are needed to protect human health. The cleanup goals (CG) for arsenic are based on the RSA BSVs:

- 15 milligrams per kilogram (mg/kg) for surface soil
- 18 mg/kg for subsurface soil.

The CGs for PAHs are based on future residential use of the site. The U.S. Environmental Protection Agency (1993) developed toxicity equivalency factors that relate the toxicity of all carcinogenic PAHs to that of benzo(a)pyrene so that cancer risk and CGs for the PAHs can be expressed as benzo(a)pyrene equivalents. The CGs for site PAHs were calculated using benzo(a)pyrene equivalents and a cumulative target cancer risk for hypothetical resident

receptors of $1x10^{-5}$ (ADEM, 2008b). This value is calculated using the representative concentrations and risk estimates for RSA-227 provided in the RFI report (CB&I, 2015a), but are also applicable to the Ditch. The CGs and corrective measures objective will be met as long as the confirmatory samples have detected concentrations less than or equal to the CGs or the detected concentrations are determined by a site to background comparison to be naturally occurring. The CGs will also be met if arsenic is not detected in confirmatory samples, as long as the reporting limits are equal to or lower than the CGs.

10.0 Description and Comparison of Alternatives

A technology screening was performed to evaluate a number of corrective measures that are potentially applicable to the contaminated soils at RSA-227, including no action, excavation and off-site disposal, land-use controls, erosion and storm water controls, and a landfill cover. The feasible technologies were packaged into three corrective measures alternatives and further evaluated against 11 evaluation criteria.

The following corrective measures alternatives for the arsenic-contaminated soil were evaluated for RSA-227:

- Alternative 1: No Action
- Alternative 2: Excavation and Off-Site Disposal
- Alternative 3: Waste Consolidation, Cover, and Land-Use Controls.

Alternative 2 involves excavating the contaminated soil at the site. The excavated soils will be transported for disposal as special waste at a Subtitle D Landfill. Alternative 3 involves consolidating contaminated soil and leaving waste on site, covering it with a low permeability barrier, and implementing storm water and land-use controls.

11.0 Selected Corrective Measures

Alternative 2 was selected as the most appropriate corrective measures to address the contaminated soil at RSA-227 in a manner that is cost-effective and consistent with the Army's intent to use the site for administrative purposes. No new land-use controls will be implemented for surface media under this alternative. Alternative 2 is less costly and more easily implemented and allows unrestricted use of the land when compared to Alternative 3.

The major components of the selected corrective measures include the following:

- Site preparation

- Removal of arsenic- and PAH-contaminated soils to the CGs (approximately 110 bank cubic yards yielding 140 loose cubic yards)
- Collection and analysis of confirmation and waste characterization samples
- Transportation of contaminated soil for final disposal at an approved off-site facility (Subtitle D landfill)
- Backfill and grading of the excavated areas
- Site restoration, including revegetation of all disturbed areas.

Excavation areas are illustrated on Figure 4-1 of the CMI work plan. The present value cost for the selected corrective measures is as follows:

- RSA-227 - $415,000.

12.0 Public Involvement

Public participation requirements specified under Alabama Administrative Code 335-14-8-.08(6) will be met during the permit modification process for the RSA-227 corrective measures. In addition, the Army intends to inform the public of the proposed RSA-227 corrective measures in a newspaper announcement in local newspapers. In both cases, the public will be provided an opportunity to review and comment on the proposed RSA-227 corrective measures.

13.0 Conclusions

This request for permit modification presented the supporting information needed to allow ADEM to modify RSA's RCRA permit, in accordance with Alabama Administrative Code R. 335-14-8-.04(2), with respect to the cleanup status at RSA-227.

14.0 References

Alabama Department of Environmental Management (ADEM), 2015, ***Redstone Arsenal's Alabama Hazardous Wastes Management and Minimization Act Hazardous Waste Storage Facility, Thermal Treatment, Solid Waste Management Unit Corrective Action Permit, Modification No. 6***, July 6.

Alabama Department of Environmental Management (ADEM), 2008a, ***Draft RCRA Facility Assessment, Redstone Arsenal, Huntsville, Alabama,*** Draft, EPA ID Number AL7 201 020 742, September.

Alabama Department of Environmental Management (ADEM), 2008b, ***Alabama Risk-Based Corrective Action Guidance Manual***, Revision 2, April.

CB&I Federal Services LLC (CB&I), 2015a, ***Revision 1, RCRA Facility Investigation Report, RSA-227, Inactive Washrack Adjacent to Building 5492, Operable Unit 6, U.S. Army Garrison-Redstone, Madison County, Alabama***, August.

CB&I Federal Services LLC (CB&I), 2015b, ***Annual Monitoring Report: 2014 Installation-Wide Groundwater Monitoring, U.S. Army Garrison-Redstone, Madison County, Alabama***, prepared for U.S. Army Environmental Command, Aberdeen Proving Ground, Maryland, May.

Shaw Environmental, Inc. (Shaw), 2013, ***Phase II Site-Specific Field Sampling Plan for RCRA Facility Investigation at RSA-227, Inactive Washrack Adjacent to Building 5492, U.S. Army Garrison-Redstone, Madison County, Alabama***, April.

Shaw Environmental, Inc. (Shaw), 2012a, ***Site-Specific Field Sampling Plan for a Phase II RCRA Facility Investigation at RSA-227, Inactive Washrack Adjacent to Building 5492, Redstone Arsenal, Huntsville, Alabama, U.S. Army Garrison-Redstone, Madison County, Alabama***, January.

Shaw Environmental, Inc. (Shaw), 2012b, ***Phase II Site-Specific Field Sampling Plan for RCRA Facility Investigation at RSA-227, Inactive Washrack Adjacent to Building 5492, U.S. Army Garrison-Redstone, Madison County, Alabama***, October.

Shaw Environmental, Inc. (Shaw), 2011, ***Interim Measure Work Plan for RSA-227, Former Storage Warehouse, Building 778/5678, Operable Unit 03, U.S. Army Garrison-Redstone, Madison County, Alabama***, June.

Shaw Environmental, Inc. (Shaw), 2010, ***Final Installation-Wide Strategy for Cleanup of Impacted Wetlands,*** prepared for the U.S. Army Environmental Command, Aberdeen Proving Ground, Maryland, May.

Shaw Environmental, Inc. (Shaw), 2009a, ***Final Installation-Wide Groundwater Cleanup Strategy, Redstone Army Garrison, Madison County, Alabama***, prepared for U.S. Army Environmental Command, December.

Shaw Environmental, Inc. (Shaw), 2009b, ***Final Installation-Wide Groundwater Land-Use Control Remedial Design, Redstone Arsenal, Madison County, Alabama,*** prepared for U.S. Army Corps of Engineers, Savannah District, Savannah, Georgia, May.

Shaw Environmental, Inc. (Shaw), 2007, ***Final Interim Record of Decision, Interim Remedial Action for Installation-Wide Groundwater, Redstone Arsenal, Madison County, Alabama***, prepared for the U.S. Army Corps of Engineers, Savannah District, Savannah, Georgia, September.

Shaw Environmental, Inc. (Shaw), 2005, ***Draft RSA-147 Potential Source Area Investigation, Redstone Arsenal, Madison County, Alabama***, prepared for the U.S. Army Corps of Engineers, Savannah District, Savannah, Georgia, January.

U.S. Army Garrison-Redstone (Army), 2012, ***Redstone Arsenal Environmental Site Access Control Program,*** Redstone Arsenal Regulation 200-7, September.

U.S. Environmental Protection Agency, 1993, ***Provisional Guidance for Quantitative Risk Assessment of Polycyclic Aromatic Hydrocarbons***, Office of Health and Environmental Assessment, Cincinnati, Ohio, EPA/600/R-93/089, March.

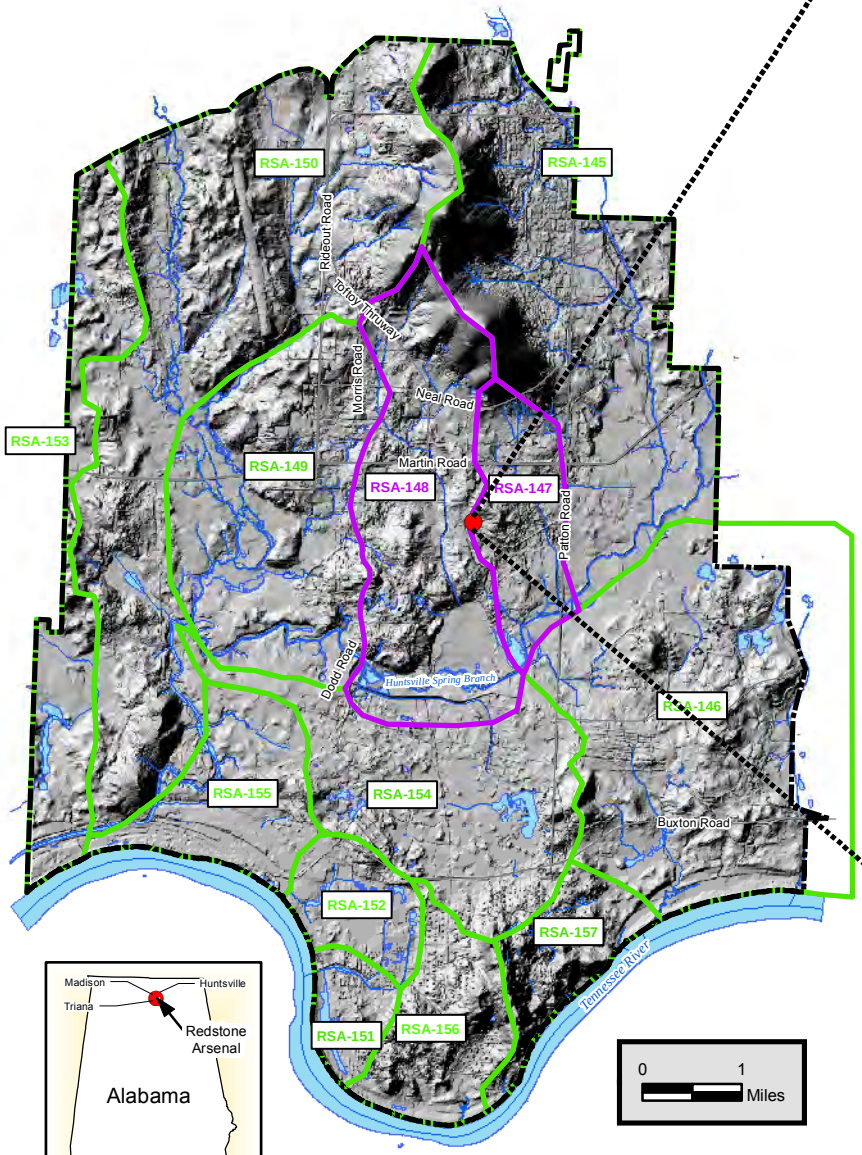

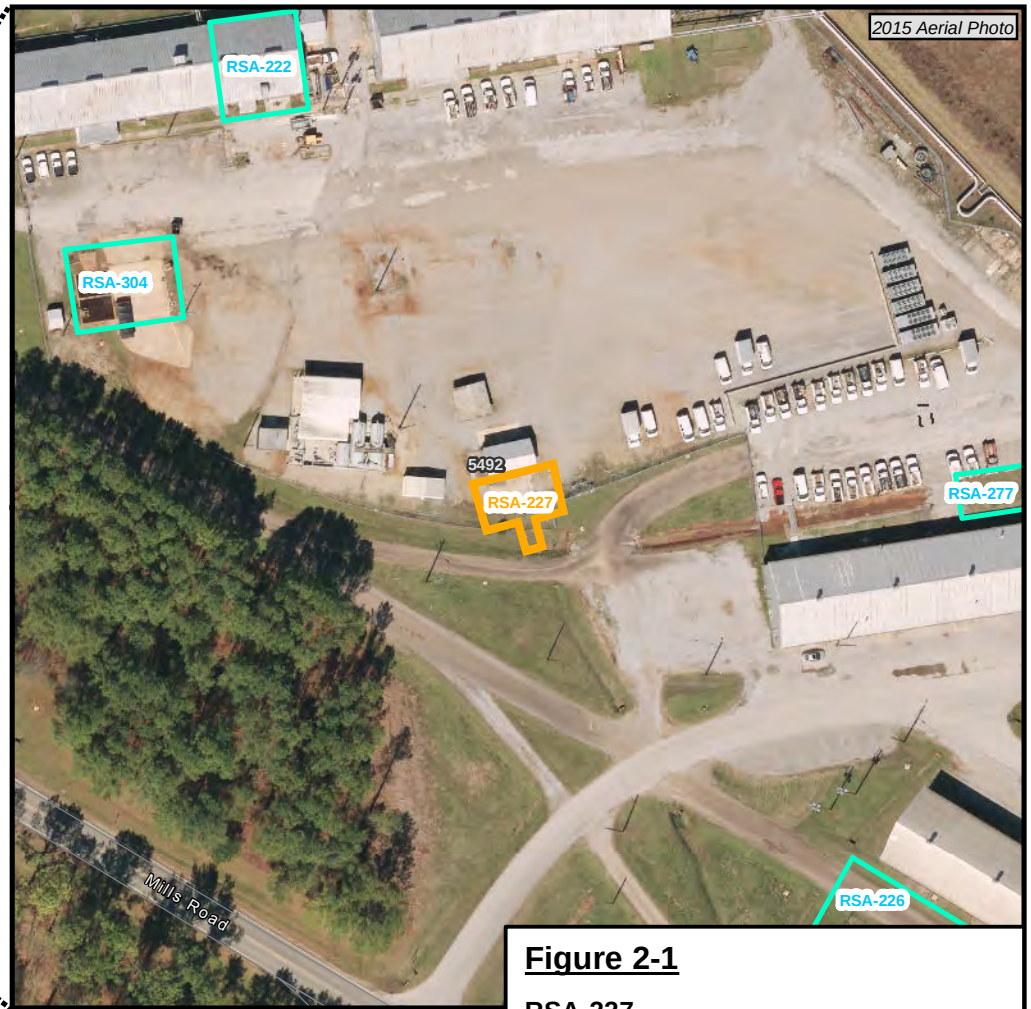

Legend

- RSA-227 Site Location
- RSA-227 Site Boundary
- Nearby Sites
- RSA-147 and RSA-148 Groundwater Unit Boundaries
- Groundwater Unit Boundaries
- RSA Installation Boundary
- Removed Structures
- Water Bodies
- Roads
- Surface Drainage Features (Some Ephemeral)

Figure 2-1

RSA-227
Site Location Map

Redstone Arsenal
Madison County, Alabama
Contract No. W91ZLK-09-D-0006

1 inch = 120 feet

0 60 120 240 Feet

NAD 1983 State Plane Alabama East Feet

CB&I Federal Services LLC

H:\Redstone\GIS_Documents\Project_maps\RSA_227\RSA_227_Draft_CMIWP_Nov2015\RSA_227_Site_Location_Map.mxd

H:\Redstone\GIS_Documents\Project_maps\RSA_227\RSA_227_Draft_CMIWP_Nov2015\RSA_227_Ditch_Site_Map.mxd

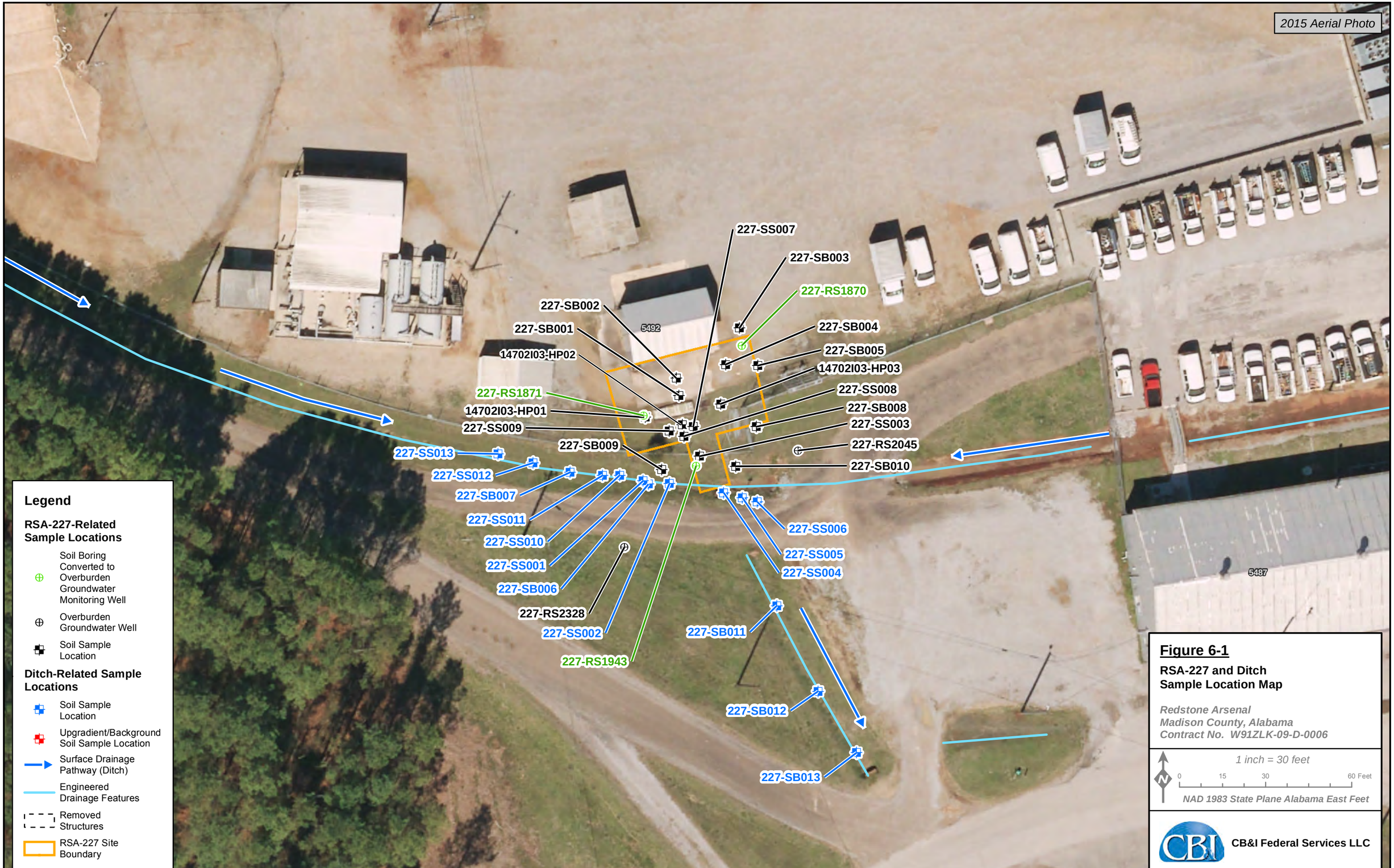

H:\Redstone\GIS_Documents\Project_maps\RSA_227\RSA_227_Draft_CMIWP_Nov2015\RSA_227_and_Ditch_Sample_Location_Map.mxd

ATTACHMENT 1

RFI REPORT CONCURRENCE LETTER

LANCE R. LEFLEUR
DIRECTOR

ROBERT J. BENTLEY
GOVERNOR

Alabama Department of Environmental Management
adem.alabama.gov

1400 Coliseum Blvd. 36110-2400 ▪ Post Office Box 301463
Montgomery, Alabama 36130-1463
(334) 271-7700 ▪ FAX (334) 271-7950

October 27, 2015

91 7108 2133 3936 7152 5112

CERTIFIED MAIL #

Mr. Terry Hazle, Director
Directorate of Environmental Management
DEPARTMENT OF THE ARMY
Installation Restoration Division
(AMSAM-RA-DEM-IR)
US Army Aviation and Missile Command
Bldg. 4488
Redstone Arsenal, AL 35898

Re: **ADEM Review and Concurrence:**
Revision 1 RCRA Facility Investigation Report, RSA-227, Inactive Washrack Adjacent to Building 5492, Operable Unit 06, dated August 31, 2015.
Redstone Arsenal (RSA) DSMOA Environmental Restoration Program
US EPA I.D. Number AL7 210 020 742

Dear Mr. Hazle:

The Alabama Department of Environmental Management (ADEM or the Department) has reviewed the *Rev. 1 RCRA Facility Investigation (RFI) Report RSA-227*, received on September 3, 2015.

Based on its review, the Department has no comments on this RFI Report for RSA-227 and concurs with the recommendation for corrective measures implementation to be performed for the surface media as a part of RSA-227 and groundwater as part of RSA-147. As stated in this RFI Report, an action is needed for arsenic and polycyclic aromatic hydrocarbon contamination in RSA-227 and the ditch soil with a groundwater action to take place in conjunction with the corrective measures required for RSA-147. Therefore, the corrective actions required for the groundwater at RSA-227 will be deferred to the RSA-147 groundwater unit for the implementation of corrective measures. Since the findings of this RFI Report indicate that actions are needed for chemicals of concern in the surface media and in the groundwater, separate corrective measures implementation (CMI) plans to address these actions are required for the surface media as part of RSA-227 and for the groundwater as a part of RSA-147.

In accordance with Permit Condition VI.E.2., CMI plans must be completed within 120 calendar days following notification from the Department that a CMI Plan is required. Therefore, RSA should submit a CMI Plan for RSA-227 within 120 calendar days of receipt of this letter.

Birmingham Branch
110 Vulcan Road
Birmingham, AL 35209-4702
(205) 942-6168
(205) 941-1603 (FAX)

Decatur Branch
2715 Sandlin Road, S.W.
Decatur, AL 35603-1333
(256) 353-1713
(256) 340-9359 (FAX)

Mobile Branch
2204 Perimeter Road
Mobile, AL 36615-1131
(251) 450-3400
(251) 479-2593 (FAX)

Mobile-Coastal
3664 Dauphin Street, Suite B
Mobile, AL 36608
(251) 304-1176
(251) 304-1189 (FAX)

This CMI Plan should also include discussion regarding the deferral of groundwater corrective measures at the site to actions under RSA-147. ADEM will move RSA-227 to Table VI.6 (Sites requiring a corrective measures implementation work plan) in the facility's Alabama Hazardous Wastes Management and Minimization Act (AHWMMA) permit as part of the next permit modification.

If you have any questions on this matter, please contact Mr. Keith West of the Remediation Engineering Section at (334) 271-7925 or at knw@adem.state.al.us.

Sincerely,

Stephen A. Cobb, Chief
Governmental Hazardous Waste Branch
Land Division

cc: Terry de la Paz, RSA
Michelle Thornton, US EPA Region IV
Brian Roberson, NASA MSFC
Jason Wilson, ADEM
Ashley T. Mastin, ADEM
Salee Downey, RSA (via email)
Jason T. Wilson, ADEM (via email)
Kelley Hartley, ADEM (via email)
Anita Shipley US EPA Region IV (via email)

APPENDIX B

CORRECTIVE MEASURES IMPLEMENTATION SCHEDULE

RSA-227 CMIP Proposed Schedule

ID	Task Name	Duration
1		
2	**Procurement and Subcontracting**	18 days
3		
4	**Mobilization**	2 days
5		
6	**Site Preparation**	**5 days**
7	Establish Stockpile / DeconAreas	1 day
8	Utility Marking / Survey of Excavation	2 days
9	Erosion Controls	1 day
10	Fence Removal	1 day
11		
12	**Washrack and Sump Removal**	**6 days**
13	Remove / Dispose Sump Contents	1 day
14	Remove Concrete Washrack and Sump	5 days
15		
16	**Excavation**	**31 days**
17	Excavation / Stockpiling	5 days
18	Confirmation / Waste Profile Sampling	5 days
19	Analysis and Data Evaluation	21 days
20		
21	**Transportation and Disposal**	2 days
22		
23	**Backfill and Site Restoration**	**5 days**
24	Soil Backfill	2 days
25	Revegetation	2 days
26	Fence Installation	1 day
27		
28	**Demobilization**	2 days

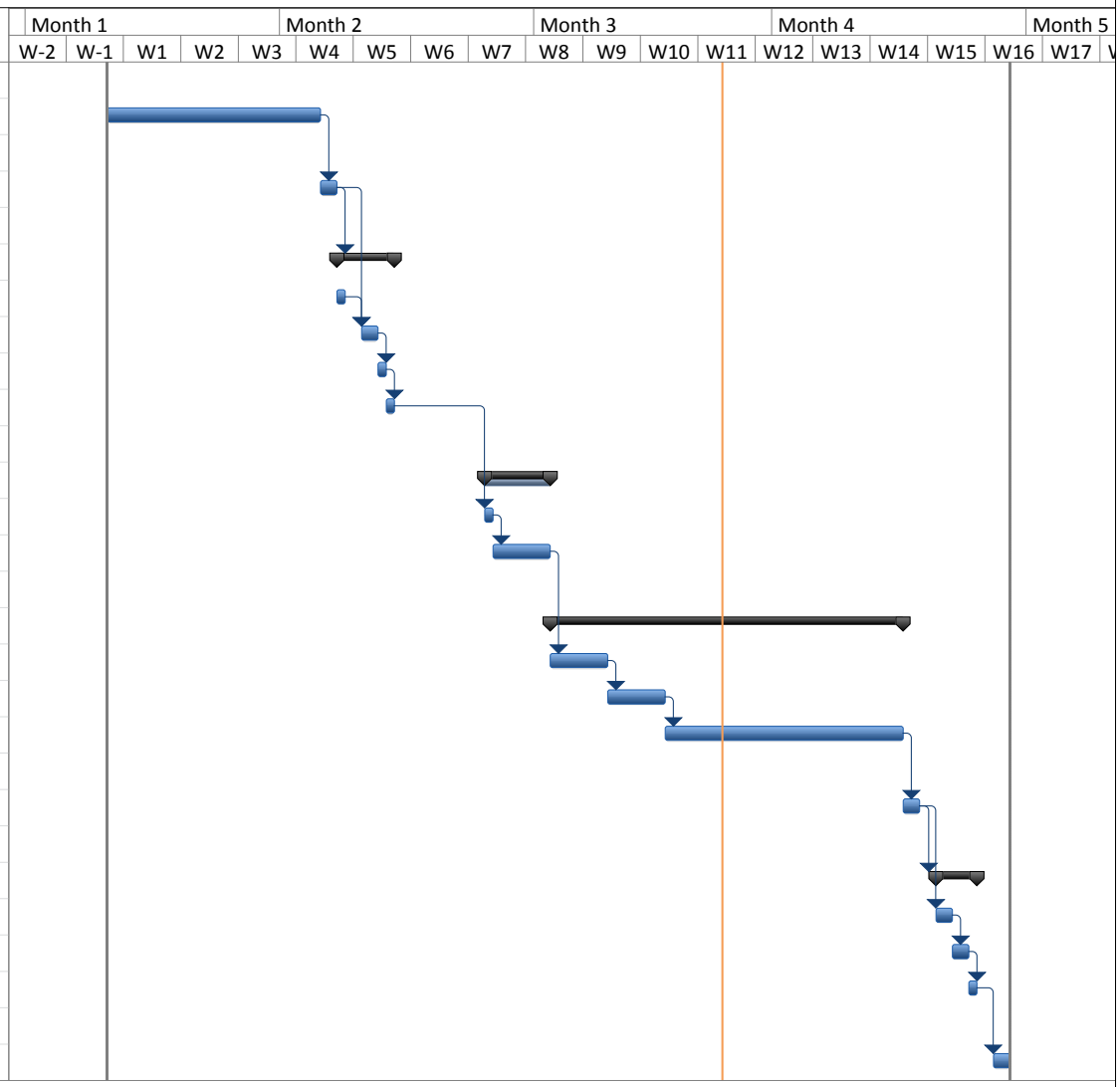

Project: RSA-227 CMIP Schedule
Date: Wed 2/24/16

Task		External Milestone		Manual Summary Rollup	
Split		Inactive Task		Manual Summary	
Milestone		Inactive Milestone		Start-only	
Summary		Inactive Summary		Finish-only	
Project Summary		Manual Task		Deadline	
External Tasks		Duration-only		Progress	

APPENDIX C

SITE-SPECIFIC SAFETY AND HEALTH PLAN

Site-Specific Safety and Health Plan
Corrective Measures Implementation
RSA-227, Inactive Washrack Adjacent to Building 5492
Operable Unit 6
U.S. Army Garrison-Redstone
Madison County, Alabama
EPA ID No. AL7 210 020 742

Prepared for:

Mission & Installation Contracting Command
ATTN: MICC Center – FSH
2107 17th Street
Building 4197, Suite 15
Fort Sam Houston, Texas 78234-5015

Prepared by:

CB&I Federal Services LLC
2410 Cherahala Boulevard
Knoxville, Tennessee 37932

Task Order 0008
Contract No. W91ZLK-09-D-0006
CB&I Project No. 147104

March 2016

The following Site-Specific Safety and Health Plan (SSHP) has been designed for the methods presently contemplated by CB&I Federal Services LLC (CB&I) for execution of the proposed work. Therefore, the SSHP may not be appropriate if the work is not performed by or using the methods presently contemplated by CB&I. In addition, as the work is performed, conditions different from those anticipated may be encountered and the SSHP may have to be modified. Therefore, CB&I only makes representations or warranties as to the adequacy of the SSHP for currently anticipated activities and conditions. This Site-Specific Safety and Health Plan Attachment must be used in conjunction with the Installation-Wide Accident Prevention Plan for Site Investigations at Redstone Arsenal (July 2013).

Reviews and Approvals

Art Holcomb, Project Manager CB&I Federal Services LLC	22-Mar-2016 Date
Doug Russell, H&S Manager CB&I Federal Services LLC	22-Mar-2016 Date
James Vigerust, H&S Field Manager CB&I Federal Services LLC	22-Mar-2016 Date
Brian Rhodes, QCSM CB&I Federal Services, LLC	22-Mar-2016 Date

Acknowledgements

The approved version of this site-specific safety and health plan (SSHP) for corrective measures implementation at site RSA-227, Inactive Washrack Adjacent to Building 5492, Operable Unit 6 at Redstone Arsenal, Madison County, Alabama, has been provided to the Quality Control Site Manager (QCSM) with concurrence of the CB&I Health and Safety Field Manager. I acknowledge my responsibility to provide the QCSM with the equipment, materials, and qualified personnel to implement fully all safety requirements in this SSHP. I will formally review this plan with the health and safety staff if site conditions or a change in scope occurs, at least annually, or until project completion.

_____ 22-Mar-2016 _

Art Holcomb, CB&I Project Manager Date

I acknowledge receipt of this SSHP from the Project Manager and that it is my responsibility to explain its contents to all site personnel and cause these requirements to be fully implemented. Any change in conditions, scope of work, or other change that might affect worker safety requires me to notify the Project Manager, Health and Safety Field Manager, and Health and Safety Manager.

_____ 22-Mar-2016 _

Brian Rhodes, CB&I QCSM Date

Safety and Health Plan
Acknowledgement Form

I have been informed of, and will abide by the procedures set forth in, this site-specific safety and health plan and its amendments for the remedial activities associated with RSA-227 corrective measures implementation at the Redstone Arsenal. By signing this acknowledgement form, I certify receipt of hazard communication training, activity hazard analysis review and understanding of CB&I health and safety policy and procedures required for safe performance of my job at Redstone Arsenal.

Printed Name	Signature	Representing	Date

Redstone Arsenal Gate Hours

Location	Weekdays	Weekends
Gate1	0530 - 2100	Closed
Gate 3	0530 – 1300 [x]	Closed
Gate 7	0530 – 1300 [x]	Closed
Gate 8	0530 – 1300	0530 - 2400
Gate 9	24/7	24/7
Gate 10	0530 – 2100	Closed
Visitor Center 1	0600 - 1430	Closed
Visitor Center 9	0600 - 1700	Closed

[*]Gates 3 and 7 outbound lanes will remain open until 1800

Gate hours and conditions are subject to change due to homeland defense initiatives; therefore, the point of contact for the most current gate operational hours is the Provost Marshall Office at (256) 876-4195.

Source: http://www.garrison.redstone.army.mil/#

Redstone Project Emergency Contacts

Fire Department (ask for RSA Fire Department) 911
Fire Department (from cellular phone) .....(256) 876-2117
Ambulance (HEMSI) 911
Installation Emergency Operations Center (non-911 emergencies) .....(256) 313-1043
Military Police .....(256) 876-2222
Huntsville Hospital (Emergency Room) .....(256) 265-8144
Huntsville Hospital (Trauma Center) .....(256) 265-8137
Chemical Agent Emergencies (state that you are at Redstone) 911
UXO Emergencies (state that you are at Redstone) 911
UXO Nonemergencies/Reporting Only .....(256) 313-3297
Garrison Safety Office .....(256) 876-2944
    Michael Moore, Safety Manager .....(256) 313-3297
    Keith Coates, Safety & Occupational Health Specialist .....(256) 876-3383
    Bobby Taylor, Safety & Occupational Health Specialist .....(256) 313-3294
    Jonathan Niedergeses (MEC support) .....(256) 876-6027
Primary Site Emergency Contact (Kajuana Rice, Site Manager,
U.S. Army Garrison-Redstone) ..... (256) 313-0368
Terry de la Paz, U.S. Army Garrison, Chief Installation Restoration Branch .....(256) 955-6968
National Response Center .....(800) 424-8802
Poison Control Center .....(800) 222-1222
EPA Region IV .....(404) 347-3931
Art Holcomb, CB&I Project Manager .....(256) 213-2188
    (Cellular) .....(256) 783-8478
Brian Rhodes, CB&I QCSM (RSA Field Office) .....(256) 213-2202
    (Mobile/Cellular) .....(256) 714-4200
    (Field Office Fax) .....(256) 213-2190
Doug Russell, CB&I H&S Manager .....(865) 560-7918
    (Mobile/Cellular) .....(865) 414-9545
James Vigerust, CB&I H&S Field Manager .....(256) 213-2196
    (Mobile/Cellular) .....(505) 410-4995
CB&I Hot Line (CB&I incident reporting) .....(866) 299-3445
Dr. William Nassetta, CORE Occupational Physician .....(225) 756-2673
Occupational Health Center, Crestwood Family Practice .....(256) 721-9916
Crestwood Workers Care Madison .....(256) 830-8930

Table of Contents

Page

List of Tables ..... C-ii
List of Figures ..... C-ii
1.0 Site Work Plan Summary C-1
2.0 Site Characterization and Analysis C-2
2.1 Anticipated Hazards C-2
2.2 General Site Information C-5
3.0 Personal Protective Equipment C-6
4.0 Site Monitoring C-7
5.0 Activity Hazard Analysis C-8

Attachment 1 – Evaluating MEC/CWM/CA Hazards in Support of HTRW Activities
Attachment 2 – CB&I Procedure CMS-710-02-PR-01600, Excavation and Trenching
Attachment 3 – CB&I Incident Reporting and Management Procedure-Federal

List of Tables

Table	Title	Follows Tab
2-1	Toxicological and Physical Properties of Chemicals	
4-1	Action Levels	
4-2	Air Monitoring Frequency and Location	
5-1	Activity Hazard Analysis	

List of Figures

Figure	Title	Follows Tab
1	Typical HAZWOPER Site Controls	
2	RSA-227 Hospital Route Map	
3	RSA-227 Crestwood Family Practice Route Map	
4	RSA-227 Crestwood Workers Care Madison Route Map	

1.0 Site Work Plan Summary

Project Objective. The U.S. Army is conducting investigation and remediation of known or suspected waste sites at Redstone Arsenal (RSA) in Madison County, Alabama, under the Resource Conservation and Recovery Act. The Army has contracted CB&I Federal Services LLC (CB&I) to perform a variety of environmental investigation and remediation services under the management of the U.S. Army Environmental Command. CB&I, on behalf of the Army, prepared this corrective measures implementation (CMI) site-specific safety and health plan (SSHP) for RSA-227, Inactive Washrack Adjacent to Building 5492, located within Operable Unit 6. This plan incorporates applicable elements of Alabama Department of Environmental Management Hazardous Waste Facility Permit No. AL7 210 020 742 and the most recent edition of the Alabama Environmental Investigation and Remediation Guidance. This plan protects employee health from hazardous constituents at concentrations exceeding applicable limits.

Corrective measures are needed at RSA-227 because concentrations of arsenic and several polynuclear aromatic hydrocarbons (PAH) in soil within RSA-227 and in the Ditch pose an unacceptable human health threat to commercial workers and future hypothetical residents. The selected corrective measures manage the risks at RSA-227 by excavation and off-site disposal of arsenic- and PAH-contaminated soils.

Project Tasks. The following project activities to meet the CMI objectives in support of soil removal actions are detailed in the RSA-227 CMI work plan:

- Mobilization/demobilization
- Utility clearance and marking
- Construction of erosion controls
- Surveying and marking of the proposed excavation areas
- Excavation of contaminated soil and washrack removal
- Confirmation sampling and analysis of the excavated area
- Waste characterization sampling
- Transport and disposal of excavated arsenic- and PAH-contaminated soils as nonhazardous waste (Subtitle D landfill)
- Site restoration, including application of backfill and topsoil, and revegetation with approved grass mixtures.

Personnel Requirements. Up to 10 employees are anticipated for the CMI at RSA-227.

All personnel on this site shall have received training, informational programs, and medical surveillance as outlined in the installation-wide accident prevention plan for site investigations at RSA and be familiar with the requirements of this SSHP.

Training and medical surveillance documentation will be maintained at the RSA CB&I office.

2.0 Site Characterization and Analysis

2.1 Anticipated Hazards

The activity hazard analysis (Chapter 5.0) contains project-specific practices to be utilized to reduce or eliminate anticipated site hazards. The activity hazard analysis indicates specific chemical and physical hazards that may be present and encountered during each task. Below each task is a list of hazards and specific actions that will be taken to control the respective hazards. These control measures may include work practice controls, engineering controls, health and safety policy reference, and/or use of appropriate personal protective equipment (PPE).

The data collected in several phases during previous investigations at RSA-227 and as reported in the Resource Conservation and Recovery Act (RCRA) facility investigation (RFI) report defined the nature and extent of contamination and was used to evaluate potential risks to current and future receptors. RFI activities included advancement of soil borings and installation of monitoring wells with associated sampling of surface soil, subsurface soil, and groundwater.

The nature and extent of contamination at RSA-227 has been defined and indicates the following:

- No volatile organic compounds (VOC) present in surface or subsurface soil at RSA-227 or surface soil at the Ditch exceed preliminary screening values (PSV) or dilution-attenuation factor (DAF) 4 soil screening levels (SSL) for leaching. Two VOCs (1,1-dichloroethene and trichloroethene [TCE]) were detected above their PSVs in groundwater water samples. 1,1-Dichloroethene was detected above the PSV in samples collected from well 227-RS1943 in July 2012, February 2013, and July 2013 and well 227-RS2328 in February 2013 and July 2013. TCE was detected at a concentration above the PSV in samples collected from well 227-RS1871 in February 2013 (a subsequent sample collected in July 2013 was nondetect for TCE) and well 227-RS2045 in July 2013 and detected at a concentration below the PSV in a sample collected in February 2013.

- The only semivolatile organic compounds (SVOC) detected at RSA-227 and the Ditch were PAHs plus several common laboratory contaminants. Several samples in

the vicinity of the washrack and the Ditch had concentrations of PAHs greater than PSVs. RSA-227 results were fully delineated to concentrations below PSVs, while results for PAHs in the Ditch surface soils were delineated to concentrations below upgradient/background locations. The PAH benzo(a)pyrene was detected in the RSA-227 subsurface soils at two locations at concentrations greater than PSVs. PAHs concentrations did not exceed PSVs in the Ditch subsurface soils.

In groundwater, one SVOC (benzo[a]anthracene) was detected in a sample collected in July 2012 from well 227-RS1870 at a concentration that exceeded the PSV. The July 2012 sample was collected immediately following well installation. The benzo(a)anthracene exceedance was not confirmed in the subsequent July 2013 sample, and no other SVOCs exceeded their PSVs.

- No pesticides/polychlorinated biphenyls (PCB) present in surface or subsurface soil at RSA-227 or surface soil at the Ditch exceed PSVs or DAF_4 SSLs for leaching. Only one groundwater sample was analyzed for pesticides/PCBs. All pesticide/PCBs were either not detected or detected below their residential PSVs.

- The metal arsenic was detected in surface soil at RSA-227 and in the Ditch at concentrations greater than the PSVs in samples where arsenic was determined not to be naturally occurring. These results have been fully delineated. All detected concentrations of metals in groundwater were determined to be naturally occurring except for one detection of cadmium from a sample collected in well 227-RS1871 on July 5, 2012. The two subsequent samples collected in February 2013 and July 2013 from well 227-RS1871 are nondetect for cadmium. As such, cadmium is not considered to be a relevant chemical of concern (COC) for groundwater at this site. All other metals at RSA-227 and in the Ditch were determined to be naturally occurring or were not present at concentrations greater than their associated PSVs.

- Chemical agents and agent breakdown products were not detected in soil or groundwater samples.

The Alabama Risk-Based Corrective Action Risk Management (RM) 2 evaluation identified arsenic, benzo(a)pyrene, and dibenz(a,h)anthracene as relevant COCs for the commercial worker. Arsenic and benzo(a)pyrene are relevant COCs in Ditch soil for the commercial worker. Arsenic, benzo(a)anthracene, benzo(a)pyrene, benzo(b)fluoranthene, dibenz(a,h)anthracene, and indeno(1,2,3-cd)pyrene) are relevant COCs for the hypothetical resident receptor for both RSA-227 and Ditch soil. Consequently, both RSA-227 and Ditch soil warrant further action to address arsenic and PAHs in soil before the site can be released for unrestricted use.

Potential contamination in groundwater beneath RSA-227 (including the saturated zone soils) has been characterized in the RSA-227 RFI report. Benzo(a)anthracene, 1,1-dichloroethene, and TCE were identified as relevant COCs for groundwater. The risks associated with TCE exceeded the acceptable limit of $1x10^{-5}$. In addition, groundwater concentrations of TCE are greater than

its maximum contaminant level. While hazards associated with 1,1-dichloroethene do not exceed the Alabama Department of Environmental Management's (ADEM) target, it is identified as a relevant COC because it is present at concentrations above the maximum contaminant level. Benzo(a)anthracene was detected at a concentration of 0.05J micrograms per liter in the July 3, 2012 groundwater sample from well 227-RS1870. This concentration was used in the RM-2 evaluation because it was the maximum detected concentration. The resulting individual excess lifetime cancer risk was above ADEM's target risk, and this chemical was identified as a relevant COC in the RFI. Although no PAHs, including benzo(a)anthracene, were detected in a subsequent sample from this well collected on July 29, 2013 from well 227-RS1870, benzo(a)anthracene is included as a relevant COC.

Further action will be required for groundwater under RSA-227 once the action for soil is complete. For administrative purposes, separate surface and groundwater units have been established at RSA for evaluation and remediation under the RCRA regulatory process, and groundwater is being evaluated separately under RSA-147.

Table 2-1 lists toxicological and physical properties of chemicals identified in previous sampling events and those expected for use during this CMI. Italicized chemical names represent material CB&I anticipates using on site.

Munitions and Explosives of Concern/Chemical Warfare Materiel/Chemical Agent. Available information including historical records and recent environmental sampling data was reviewed with respect to munitions and explosives of concern (MEC) including chemical warfare materiel (CWM), or chemical agent (CA) potential at RSA-227. The review indicated that the probability of encountering munitions is "none" and measurable concentrations of CA or agent breakdown products is "unlikely." The hazard evaluation process is documented in the MEC/CWM/CA hazard forms provided in Attachment 1. Based on this evaluation, it was determined that CA monitoring or on-site unexploded ordnance support will not be required for the CMI. However, in the event any suspicious item is encountered, all work shall stop, the Project Manager and Health and Safety Manager will be notified, and the Project Manager will be responsible for following the notification requirements in the Explosive Safety Management Program. If the suspicious item can be positively identified by qualified unexploded ordnance personnel as not presenting an explosive or chemical agent hazard or once the hazard has been removed, work will proceed. Further information on this hazard identification, notification and removal process is presented in RSA's installation-wide accident prevention plan.

2.2 General Site Information

RSA is located in southern Madison County, Alabama, and bounded by the city of Huntsville to the north and east and by the Tennessee River to the south. The towns of Madison and Triana are northwest and southwest of the facility, respectively. RSA encompasses approximately 38,300 acres, and the Department of the Army controls 36,459 acres of that total, of which approximately 15,500 acres are woodlands, 5,360 acres are leased for agricultural use, and approximately 12,000 acres are used for test ranges. The National Aeronautics and Space Administration was granted 1,841 acres in the central part of RSA for the George C. Marshall Space Flight Center. Prior to this land grant in 1960, the area occupied by George C. Marshall Space Flight Center was used by the Army. Approximately 2,900 acres owned by the Tennessee Valley Authority and 4,100 acres of the Wheeler National Wildlife Refuge are within the boundaries of RSA. A description of RSA-227 is provided below.

RSA-227. RSA-227 is an approximately 0.04-acre site located adjacent to Building 5492, north of Mills Road in the maintenance shop complex (Buildings 5494/5495). RSA-227 includes an inactive car wash with washrack and sump on the south side of Building 5492 in a developed and paved area. The sump is constructed of concrete and covered by a metal grate that appears to be in poor condition. A visual site inspection at the site noted that there was no oil/water separator associated with the washrack. Current site use is for parking of maintenance equipment. Additionally, natural surface features collect runoff from the northwest of RSA-227 and the east of RSA-227 and directs the combined flow to another drainage ditch that extends south of RSA-227. This set of drainage features are collectively referred to as the Ditch in this RFI report.

No documentation is available on the date of construction of the washrack or its years of usage, according to the 2004 potential source area investigation. However, interviews with site personnel suggest the washrack has not been used since 1984. Subsequent to this use, the area was used as a parking area for maintenance equipment.

The concrete washrack consists of a concrete slab approximately 30 feet by 16 feet in size that slopes toward the south into an adjacent, existing concrete sump. The washrack and sump are not covered and so continue to receive rainfall. The sump measures approximately 5 feet by 20 feet (outer dimensions) and has 4.5-foot-deep (inner dimension) walls that are generally 6 inches in thickness. The sump is covered with steel grates that are intact but deteriorating. Based on field observations, an additional concrete collar, approximately 5 inches in width and approximately 3 inches in depth, appears to have been added to the perimeter of the sump. The floor thicknesses of the washrack and sump were not field verified. There is no drain pipe running from the sump to the ditch. On the ditch side (south side) of the sump, there is a notch cut out of the sump,

where overflow from surface water runoff discharges overland to the adjacent surface drainage ditch. Details of the washrack, sump, and Ditch features are presented in the RFI report.

The land use for this site is currently classified as business. The RSA-227 area is currently used as the base motor pool. Where practical, the Army has restricted entry into the solid waste management units by fencing them and/or placing warning signs at key entry points. RSA-227 is not fenced; however, access to the RSA property as a whole is controlled.

3.0 Personal Protective Equipment

The work activities will begin in the following levels of protection.

Task	Initial Level of PPE
Mobilization and equipment staging	Level D
Utilities identification and locating	Level D
Construction of erosion controls	Level D
Surveying and marking the proposed excavation areas	Level D
Soil excavation and washrack removal	Modified Level D
Confirmation sampling and analysis of the excavated area	Modified Level D
Waste characterization sampling.	Modified Level D
Transport and disposal of excavated soils contaminated with arsenic and PAHs as nonhazardous waste (Subtitle D landfill)	Level D
Backfilling	Level D
Decontamination	Modified Level D
Site restoration	Level D

Based on the maximum arsenic and PAH values from previous investigations, it is unlikely Level C PPE will be necessary. However, air monitoring will be required to provide additional margin of safety.

Complete descriptions of Level D and Modified Level D PPE follow.

Level D. The following equipment will be used for Level D protection:

- Long-sleeved shirt and long pants
- Appropriate gloves (when handling sharp objects)
- Nitrile gloves (when handling potentially contaminated materials)
- Steel/composite-toed safety boots
- Safety glasses

- Hard hat
- Hearing protection (when working near/adjacent to operating equipment).

Modified Level D. The following equipment will be used for Modified Level D protection:

- Permeable Tyvek®, Kleenguard, or its equivalent
- Latex boot covers
- Nitrile gloves (outer)
- Lightweight nitrile gloves (inner)
- Steel/composite-toed safety boots
- Safety glasses
- Hard hat
- Hearing protection (when working near/adjacent to operating equipment).

Operators of pressure washing equipment shall wear a face shield and leg guards in addition to Modified Level D PPE.

Level C. Level C protection is not anticipated unless an upgrade in respiratory protection is required based on air monitoring action levels. The following equipment will be used for Level C protection:

- National Institute for Occupational Safety and Health-approved full-face, air-purifying respirators equipped with organic vapor/acid gas cartridges and P100 particulate filters
- Permeable Tyvek or Tychem, taped at gloves, boots, and respirator; impermeable Tyvek if splash hazard exists
- Nitrile gloves (outer)
- Lightweight nitrile gloves (inner)
- Neoprene steel-toed boots or latex overbooties/steel/composite-toed safety boots
- Hard hat
- Hearing protection (when working near/adjacent to operating equipment).

4.0 Site Monitoring

The primary COCs based on review of historical information and analytical data from previous sampling activities are arsenic and PAHs in surface soil and Ditch soil. The potential for chemical exposure through skin contact and inhalation is unlikely during corrective measures. As

a precaution, the Site Safety and Health Officer or qualified field leader will perform air monitoring for VOCs, lower explosive limits, and total dust during the following activities:

- Excavation of contaminated soil
- Washrack removal.

A calibrated combustible gas/oxygen analyzer with a photoionization detector (i.e., MSA Sirius or equivalent) will be utilized to monitor the work area for potential flammable and/or oxygen-deficient atmospheres and VOCs to determine if airborne material may be present that would necessitate upgrading of protection level. Respirable dust measurements will be collected during CMI using a Data Ram PDR 1000 or equivalent real-time aerosol monitor. Dust suppression will commence when aerosol levels in the work area or directly downwind reach 2.5 milligrams per cubic meter. This level is one half the Occupational Safety and Health Administration particulate not otherwise specified threshold respirable fraction. Personnel breathing zone monitors with inline filters will be used to monitor levels in the breathing zone. Action levels for air monitoring are provided in Table 4-1. Table 4-2 provides the minimum air monitoring frequency and locations.

5.0 Activity Hazard Analysis

The activity hazard analysis (Table 5-1) is provided for the following CMI activities at RSA:

- Staging equipment and general field activities
- Utility clearance
- Soil and washrack removal
- Material storage
- High-pressure water jetting operations (pressure washing).

During excavation and trenching, CB&I Procedure CMS-710-02-PR-01600 (Attachment 2) must be followed. This procedure complies with Occupational Safety and Health Administration Regulations 1926.650 through 1926.652 and EM 385 1-1. No one is permitted to enter any excavation greater than 4 feet deep unless it is made safe for entry and inspected by the competent person. For this CMI, no one shall enter an excavation exceeding 4 feet. Sloping (sloping system) requirements shall be in accordance with 29 Code of Federal Regulations 1926 Subpart P, Appendix B. Sloping shall take into account, at a minimum, the angle of incline required to prevent a cave-in with differences in such factors as the soil type, environmental conditions of exposure, and application of surcharge loads.

All excavation shall be performed from a stable ground position. Daily inspections of the excavation shall be made as needed throughout work shifts and after every rainstorm or other hazard-increasing occurrence by a competent person who has received training and is competent in excavation safety. The competent person shall determine the likelihood of a cave-in, and reasonable actions such as sloping or shoring shall be taken if the walls appear to be unstable. Excavations classified as confined space shall follow CB&I Procedure CMS-710-02-PR-01700, *Confined Spaces.* When it is necessary for personnel to be near the excavation for photographic documentation, an excavation-competent person must deem it safe to do so. Otherwise, all excavations shall be photographed by the excavator operator from within the cab when it is safe to do so.

All spoil shall be located at least 3 feet from the edge of the excavation to prevent loading on the excavation platform. The excavation shall be guarded on all sides by barricades or caution tape at least 10 feet from the edge. Class II protection around excavations within the delineated exclusion zone shall be utilized. Figure 1 shows a typical Hazardous Waste Operations and Emergency Response site controls.

All project personnel shall participate in the daily tailgate safety meetings and be instructed on the following requirements:

- Before excavating, the existence and location of underground utilities will be determined in accordance with CMS-710-02-PR-01600 by contacting the appropriate RSA representative to mark the location of the lines. If the RSA representative's knowledge of the area is incomplete, an appropriate device such as ground-penetrating radar will be used.

- If excavating equipment is located in the vicinity of overhead power lines, a minimum distance of 15 feet must be maintained between the lines and any point on the equipment. If the lines have appreciable sag or windy conditions exist, this distance shall be 20 feet.

- Only hand digging shall occur within 3 feet of underground utilities. When the lines are exposed, heavy equipment can be used but must remain 3 feet from the exposed utility. A spotter shall be required at all times when working near exposed lines.

All occupational injuries or illness shall be immediately reported and investigated in accordance with CB&I CMS-710-01-PR-02200, *Incident Notification*. Attachment 3 contains the Incident Reporting Management Procedure-Federal. Injuries that require emergency medical evaluation/treatment shall be cared for by Huntsville Hospital ([256]265-8137). A map and directions to the hospital from the site area are provided on Figure 2. Personnel calling 911 on a cellular phone for emergency medical services must state they are located on RSA in order for

the call to be directed to the proper emergency management office. Any suspect chemical agent exposure requires notification to the RSA Fire Department in accordance with the Explosive Safety Management Program. In the event a medical or MEC emergency occurs, notify the Garrison Installation Operations Center (IOC) at ([256]) 313-1043 after initial emergency contacts have been completed in order to update IOC on the situation.

Injuries that require medical treatment beyond on-site first aid but are not life threatening or severe in nature shall be cared for and evaluated by an occupational physician. The occupational clinic, Crestwood Family Practice ([256] 721-9916), has been selected for CB&I employees working at RSA. A map and directions to the occupational clinic from the site area are provided on Figure 3. A map and directions for an additional occupational clinic, Crestwood Workers Care Madison, are provided on Figure 4. Subcontractors are encouraged to establish occupational medicine services prior to work on site.

TABLES

Table 2-1

Toxicological and Physical Properties of Chemicals
RSA-227
Redstone Arsenal, Madison County, Alabama

Substance [CAS]	IP[a] (eV)	Odor Threshold (ppm)	Route[b]	Symptoms of Exposure	Treatment	TWA[c]	STEL[d]	Source[e]	IDLH (NIOSH)[f]
Coal tar pitch volatiles (pyrene, phenanthrene, acridine, chrysene, anthracene & benzo(a)pyrene [65996-93-2]		?	Inh Con	dermatitis, bronchitis, [potential occupational carcinogen]	Eye: Irrigate promptly Skin: Soap wash Breath: Respiratory support Swallow: Immediate medical attention Aspiration: Immediate medical attention	0.2 mg/m^3 0.2 mg/m^3 0.1 mg/m^3		PEL TLV REL	Ca [80 mg/m^3]
Fuel oil (diesel oil, medium)	None	None	Ing Inh Con	Ingestion causes nausea, vomiting, and cramps; depressed central nervous system, headache, coma, death; pulmonary irritation; kidney and liver damage; aspiration causes severe lung irritation, coughing, gagging, dyspnea, sub-sternal stress, pulmonary edema; bronchopneumonia; excited, then depressed, central nervous system.	Eye: Irrigate promptly Skin: Soap wash Breath: Respiratory support Swallow: Immediate medical attention Aspiration: Immediate medical attention			PEL TLV REL	

Table 2-1

Toxicological and Physical Properties of Chemicals
RSA-227
Redstone Arsenal, Madison County, Alabama

Substance [CAS]	IP[a] (eV)	Odor Threshold (ppm)	Route[b]	Symptoms of Exposure	Treatment	TWA[c]	STEL[d]	Source[e]	IDLH (NIOSH)[f]
Gasoline [8006-61-9]	None	0.3	Inh Ing Con	Intoxication, headaches, blurred vision, dizziness, nausea; eye, nose throat irritation; potential kidney and other cancers. Carcinogenic.	Eye: Irrigate immediately (15 min) Skin: Soap wash promptly Breath: Respiratory support Swallow: Immediate medical attention	300 ppm Ca, lowest feasible conc. (LOQ 15 ppm)	500 ppm	PEL TLV REL	1400 ppm 10% LEL
Hydrogen chloride (hydrochloric acid) [74-90-8]	12.74	0.255–10.6	Inh Ing Con	Inflamed nose, throat, larynx; cough, burns throat, choking; burns eyes, skin; dermatitis; in animals; laryngeal spasm; pulmonary edema.	Eye: Irrigate immediately Skin: Water flush immediately Breath: Respiratory support Swallow: Immediate medical attention		C5 ppm C5 ppm C5 ppm	PEL TLV REL	100 ppm
Nitric acid [7697-37-2]	11.95	0.3–1	Inh Ing Con	Irritated eyes, mucous membranes, and skin; delayed pulmonary edema, pneumonitis, bronchitis; dental erosion.	Eye: Irrigate immediately Skin: Water flush promptly Breath: Respiratory support Swallow: Immediate medical attention	2 ppm 2 ppm 2 ppm	4 ppm 4 ppm 4 ppm	PEL TLV REL	100 ppm
Portland cement [65997-15-1]	NA	NA	Inh	Fine gray powder that can be irritating if inhaled or in eyes.	Eye: Irrigate immediately Skin: Soap wash immediately Breath: Respiratory support Swallow: Immediate medical attention	5 mg/m^3 respirable dust 15 mg/m^3 total dust 10 mg/m3 10 mg^3/ total dust 5 mg/m3 respirable dust	- - -	PEL TLV REL	5000 mg/m^3

Chemical substances *Italicized* represent material CB&I may use on site and do not indicate a site-related chemical of concern.

Table 2-1

Toxicological and Physical Properties of Chemicals
RSA-227
Redstone Arsenal, Madison County, Alabama

[a]IP - Ionization potential (electron volts).
[b]Route - Inh, Inhalation; Abs, Skin absorption; Ing, Ingestion; Con, Skin and/or eye contact.
[c]TWA - Time-weighted average. The TWA concentration for a normal work day (usually 8 or 10 hours) and a 40-hour work week, to which nearly all workers may be repeatedly exposed, day after day without adverse effect.
[d]STEL - Short-term exposure limit. A 15-minute TWA exposure that should not be exceeded at any time during a workday, even if the TWA is not exceeded.
[e]PEL - Occupational Safety and Health Administration (OSHA) permissible exposure limit (29 CFR 1910.1000, Table Z).
AEL - Airborne Exposure Limit.
TLV - American Conference of Governmental Industrial Hygiene (ACGIH) threshold limit value—TWA.
REL - National Institute for Occupational Safety and Health (NIOSH) recommended exposure limit.
[f]IDLH (NIOSH) - Immediately dangerous to life or health (NIOSH). Represents the maximum concentration from which, in the event of respirator failure, one could escape within 30 minutes without a respirator and without experiencing any escape-impairing or irreversible health effects.
NE - No evidence could be found for the existence of an IDLH (NIOSH Pocket Guide to Chemical Hazards, Pub. No. 2014).
C - Ceiling limit value which should not be exceeded at any time.
Ca - Carcinogen.
NA - Not applicable.
? - Unknown.
LEL - Lower explosive limits.
LC_{50} - Lethal concentration for 50 percent of population tested.
LD_{50} - Lethal dose for 50 percent of population tested.
NIC - Notice of intended change (ACGIH).

References:

American Conference of Governmental Industrial Hygienists Guide to Occupational Exposure Values, 2015, compiled by the American Conference of Governmental Industrial Hygienists.
Amoore, J. E. Hautula, "Odor as an Aid to Chemical Safety," Journal of Applied Toxicology, 1983.
Clayton, George D., Clayton, F. E., Patty's Industrial Hygiene and Toxicology, 3rd ed., John Wiley & Sons, New York.
Documentation of TLVs and BEIs, American Conference of Governmental Industrial Hygienists, 2015.
Fazzuluri, F. A., Compilation of Odor and Taste Threshold Values Data, American Society for Testing and Materials, 1978.
Gemet, L. J. Van, Compilation of Odor Threshold Values in Air and Water, CIVO, Netherlands, 1977.
Gemet, L. J. Van, Compilation of Odor Threshold Values in Air and Water, Supplement IV, CIVO, Netherlands, 1977.
Lewis, Richard J., Sr., 1992, Sax's Dangerous Properties of Industrial Materials, 8th ed., Van Nostrand Reinhold, New York.
Micromedex Tomes Plus (R) System, 1992, Micromedex, Inc.
National Institute for Occupational Safety and Health Pocket Guide to Chemicals, Pub. No. 2005-151, National Institute for Occupational Safety and Health.
Odor Threshold for Chemicals with Established Occupational Health Standards, American Industrial Hygiene Association, 1989.
Respirator Selection Guide, 3M Occupational Health and Safety Division, 2010.
Verschuseren, K., Handbook of Environmental Data on Organic Chemicals, Van Nostrand and Reinhold, 1977.
Warning Properties of Industrial Chemicals—Occupational Health Resource Center, Oregon Lung Association.
Workplace Environmental Exposure Levels, American Industrial Hygiene Association, 1992.

Table 4-1

Action Levels
RSA-227
Redstone Arsenal, Madison County, Alabama

When in Level C PPE

Analyte	Action Level[a]	Required Action
VOCs	≥ 200 ppm above background in BZ	Stop work, evacuate work area; contact HSM [b].
Oxygen	≥ 20%, <23%	Normal operations.
	< 20%, >23%	Stop work, evacuate work area; contact HSM [b].
Flammable vapors	≥ 10% LEL	Stop work, evacuate work area; contact HSM [b].
	< 10% LEL	Continue operations, monitor for VOCs.
Respirable dust	15 mg/m^3	Stop work and thoroughly wet on-site source location.

When in Level D Modified/D PPE

Analyte	Action Level[a]	Required Action[b]
VOCs	≥ 25 ppm above background in BZ	Stop activities, suspend work activities for 15 to 30 minutes; if readings are sustained, upgrade to Level C PPE; contact HSM [b].
Oxygen	≥ 20%, <23%	Normal operations.
	< 20%, >23%	Stop work, evacuate work area; contact HSM.
Flammable vapors	≥ 10% LEL	Stop work, evacuate work area; contact HSM [b].
	< 10% LEL	Continue operations, monitor for VOCs.
Respirable dust	≥ 2.5 mg/m^3	Stop work and thoroughly wet on-site source location.

When in Support Zone

Analyte	Action Level[a]	Required Action
VOCs	≥ 5 ppm above background in BZ	Evacuate support zone and re-establish perimeter of exclusion zone.
Respirable dust	≥ 2.5 mg/m^3	Stop work and thoroughly wet on-site source location.

[a] Four instantaneous peaks in any 15-minute period or a sustained reading for 5 minutes in excess of the action level will trigger a response.
[b] Contact with the HSM must be made prior to continuance of work. The HSM may then initiate perimeter/integrated air sampling along with additional engineering controls.

< - Less than.
≥ - Greater than or equal to.
> - Greater than.
BZ - Breathing zone.
HSM - Health and safety manager.
LEL - Lower explosive limit.
PPE - Personal protective equipment.
ppm - Parts per million.
VOC - Volatile organic compound.

No one is permitted to downgrade levels of PPE without authorization from the HSM.

Table 4-2

Air Monitoring Frequency and Location
RSA-227
Redstone Arsenal, Madison County, Alabama

Work Activity	Instrument	Frequency	Location
Initial site setup and equipment staging	OV Monitor CGI	Initially for location, then periodically every 30 to 60 minutes	BZ of employees
Contaminated soil excavation and wash rack removal	OV Monitor CGI PDR	Continuously Continuously Continuously	BZ of employees BZ of employees and downwind

BZ - Breathing zone.
CGI - Combustible gas indicator.
OV - Organic vapor.
PDR - Aerosol monitor.

Table 5-1

Activity Hazard Analysis
RSA-227
Redstone Arsenal, Madison County, Alabama

Activity	Potential Hazards	Recommended Controls
Staging Equipment and General Field Activities	Slip, trip, and fall hazards	• Determine best access route before transporting equipment. • Practice good housekeeping; keep work area picked up and clean as feasible. • Continually inspect the work area for slip, trip, and fall hazards. • Look before you step; ensure safe and secure footing.
	Heavy lifting	• Use proper lifting techniques. Lifts greater than 50 pounds require assistance or mechanical equipment.
	Falling objects	• Stay alert and clear of materials suspended overhead; wear hard hat and steel-toed boots.
	Flying debris, dirt, dust, etc.	• Wear safety glasses/goggles; ensure that eye wash is in proper working condition.
	Pinch points	• Keep hands, fingers, and feet clear of moving/suspended materials and equipment. • Beware of contact points. • Stay alert at all times!
	Cuts/bruises	• Use cotton or leather work gloves for material handling.
	Bees, spiders, and snakes	• Inspect work area carefully and avoid placing hands and feet into concealed areas.
	Ticks	• Wear light colored clothing (can see ticks better). • Mow vegetated and small brush areas. • Wear insect repellant. • Wear long sleeves and long pants. • Visually check oneself promptly and frequently after exiting the work area.
	Fire	• Fire extinguishers shall be suitably placed, distinctly marked, readily accessible, and maintained in a fully charged and operable condition. • All earthmoving machinery shall be equipped with at least one Co_2 or dry chemical fire extinguisher with an minimum rating 20-B:C. • Employees shall be trained in the use of dry chemical fire extinguishers.
	Hazard communication	• Label all containers as to contents and hazard warning, and dispose of properly. • Ensure Safety Data Sheets (SDS) are available for hazardous chemicals used on site.
	Noise	• Sound levels above 85 decibels (dBA) mandates hearing protection.
	Lighting	• Adequate lighting will be provided to ensure a safe working environment. • Work will be performed after sunrise and before sunset.

Table 5-1

Activity Hazard Analysis
RSA-227
Redstone Arsenal, Madison County, Alabama

Activity	Potential Hazards	Recommended Controls
Staging Equipment and General Field Activities (continued)	Cold stress	• Workers should wear insulated clothing when temperatures drop below 40 degrees Fahrenheit (°F). • Drink warm beverages on breaks. Refrain from drinking caffeinated beverages. • Remove wet clothing promptly. • Take breaks in warm areas. • Reduce work periods as necessary. • Layer work clothing.
	Poison ivy/oak/sumac	• Avoid plant areas if possible. • Wear long sleeves and long pants. • Promptly wash clothing that has contacted poisonous plants. • Wash affected areas immediately with soap and water.
	Heat rash	• Keep the skin clean and dry. • Change perspiration-soaked clothing, as necessary. • Bathe at end of work shift or day. • Apply powder to affected area.
	Heat cramps	• Drink plenty of cool fluids even when not thirsty. • Provide cool fluid for work crews. • Move victim to shaded, cool area.
	Heat exhaustion	• Conduct physiological worker monitoring (i.e., heart rate, oral temperature) when working in ambient air temperatures exceeding 90°F (78°F if wearing impermeable clothing). • Set up work/rest periods. • Use the “buddy system.” • Allow workers time to acclimate. • Have ice packs available for use. • Take frequent breaks.
	Heat stroke	• Evaluate possibility of night work. • Perform physiological monitoring on workers during breaks. • Wear body cooling devices.

Table 5-1

Activity Hazard Analysis
RSA-227
Redstone Arsenal, Madison County, Alabama

Activity	Potential Hazards	Recommended Controls
Staging Equipment and General Field Activities (continued)	Contact with moving equipment/vehicles	• Work area will be barricaded/demarcated. • Equipment will be laid out in an area free of traffic flow. • Wear Class 3 ANSI/ISEA high visibility apparel when subject to moving equipment and vehicle hazards. • Barricades shall be used on or around work areas when it is necessary to prevent the inadvertent intrusion of pedestrian traffic. • Barriers shall be used to protect workers from vehicular traffic. • Barriers shall be used to guard excavations adjacent to streets or roadways. • Flagging shall be used for the short term (less than 24 hours) to identify hazards until proper barricades or barriers are provided. • Heavy equipment shall have backup alarms.
	Operation of motor vehicles and trucks - general.	• All company owned, leased, or rented vehicle operations shall comply with the requirements of CB&I Federal Services, “Commercial & Non-commercial Vehicle Use.” • All company owned, leased, or rented commercial vehicle operations shall comply with the requirements of, CMS-710-02-PR-03900 “Commercial Motor Vehicle Safety.” • Subcontractors operating motor vehicles shall comply with all federal, state, and local traffic regulations. • Subcontractors shall only use vehicles, which are in good condition and safe to operate. • Subcontractors shall inspect vehicles routinely used on a weekly basis and submit the inspection documentation to the Site Safety and Health Officer. • All personnel shall drive defensively, take adequate rest breaks, and wear seat belts while vehicles are in motion. • Use a spotter to help guide vehicles through tight areas.
	Operation of motor vehicles and trucks – backing.	• Back into parking spaces upon arrival, whenever possible. • Walk around the vehicle before backing to identify any new conditions or obstructions. • Set out orange cone system to require truck operator to walk around truck and collect cone(s) prompting area inspection prior to moving truck. • Use a spotter when backing whenever possible. • Understand hand signals. • Sound horn prior to backing. • Check the rear-view and side mirrors prior to backing. (Note: All vehicles, other than automobiles, should have small convex mirrors attached to the side mirrors.) • Back slowly in areas of obstructed vision. • Anticipate others who may be backing out into your pathway and adjust accordingly.

Table 5-1

Activity Hazard Analysis
RSA-227
Redstone Arsenal, Madison County, Alabama

Activity	Potential Hazards	Recommended Controls
Staging Equipment and General Field Activities (continued)	Operation of motor vehicles and trucks – speeding.	• Obey all posted speed limits. • Radar detectors are prohibited in all company owned, leased, or rented vehicles. • Reduce travel speed during hazardous conditions (e.g., rain, fog, and snow). Maintain 2 seconds between vehicles under normal conditions; maintain 3 seconds behind motorcycle; 7 seconds pulling a trailer behind a semi-truck; and 6 seconds behind a semi-truck, no trailer; add additional seconds for rain, fog, etc. • Determine whether your vehicle has anti-lock brakes. If it does, read the operators manual to determine how to use them properly. Test the brakes on a wet roadway so that you will know how they perform under emergency conditions. • Always leave yourself an “out” during travel. • When stopping, make sure that you leave enough distance between you and the car in front of you. You should be able to see the rear tires of the vehicle in front, when stopped. • When at a red light, and it turns green, use the “delayed start” technique, by counting to three before you take your foot off the brake. • DO NOT TAILGATE.
	Operation of motor vehicles and trucks – blind spots.	• Become familiar with any blind spots associated with your vehicle. • Adjust mirrors properly. • Make sure you use your directional signals. • Always look over your shoulder to ensure that the lane is clear when changing lanes. • Become extra cautious when approaching other drivers’ blind spots.
	Operation of motor vehicles and trucks – vehicle loading.	• Do not overload the vehicle. • Secure all equipment within the body of the vehicle. • Do not block side view mirrors with load. • Do not transport U.S. Department of Transportation manifested hazardous materials without a commercial driver’s license with appropriate endorsements. All hazardous material shipments must have prior approval from the Project Manager and Health and Safety Manager. • Vehicles carrying loads that project beyond the sides of rear of the vehicle shall carry a red flag not less than 44 square inches at or near the end of the projection. • Dispatch all equipment and personnel with proper forms and identification.

Table 5-1

Activity Hazard Analysis
RSA-227
Redstone Arsenal, Madison County, Alabama

Activity	Potential Hazards	Recommended Controls
Staging Equipment and General Field Activities (continued)	Operation of motor vehicles and trucks – equipment failure.	• Perform required inspections of your vehicle. • Any vehicle with mechanical defects that may endanger the safety of the driver, passengers or the public shall not be used. • Verify that safety equipment is in the vehicle. Safety equipment should include a spare tire, jack, first aid kit, fire extinguisher, and flashlight. • Flares and/or reflective triangles should be available in larger trucks. • Ensure that the proper documentation is in the vehicle. Documentation should include an operations manual for the vehicle, insurance card, vehicle registration, and accident report forms.
	Operation of motor vehicles and trucks – influenced by drug and alcohol.	• Never drive under the influence of drugs or alcohol. • Conviction of DUI/DWI will result in loss of driving authorization on company business and possibly your employment with CB&I.
Utility Clearances	Contact with utilities	• All overhead and subsurface utilities shall be identified, isolated, and removed from service prior to initiation of construction. • CMS-710-02-PR-01610,"Identifying Underground Installations" shall be followed. • Temporary electrical disconnects shall be performed under strict lock-out-tag-out procedures as specified in the APP.
	Slip, trip, and fall hazards	• Determine best access route before transporting equipment. • Continually inspect the work area for slip, trip, and fall hazards. • Look before you step, ensure safe and secure footing.
	Heavy lifting	• Use proper lifting techniques. Lifts greater than 50 pounds require assistance or mechanical equipment.
	Falling objects	• Stay alert and clear of materials suspended overhead; wear hard hat and steel-toed boots.
	Pinch points	• Keep hands, fingers, and feet clear of moving/suspended materials and equipment. • Beware of contact points. • Stay alert at all times!
	Snakes	• Inspect work area carefully and avoid placing hands and feet into concealed areas. • Wear snake chaps when walking through heavy vegetated areas.

Table 5-1

Activity Hazard Analysis
RSA-227
Redstone Arsenal, Madison County, Alabama

Activity	Potential Hazards	Recommended Controls
Soil and wash rack removal/disposal	Heavy equipment operations	• Only qualified, trained, and authorized personnel will operate heavy equipment. • Before any machinery or mechanized equipment is placed into service, it shall be inspected and tested by a competent mechanic and certified to be in safe operating condition. • Equipment shall be inspected before being placed into service and at the beginning of each shift. • Preventive maintenance procedures recommended by the manufacturer shall be followed. • All lockout/tagout procedures shall be used for equipment found to be faulty or undergoing maintenance. • Machinery and mechanized equipment shall be operated only by designated personnel. • Getting off or on any equipment while it is in motion is prohibited. • Machinery or equipment requiring an operator shall not be permitted to run unattended. • Machinery or equipment will not be operated in a manner that will endanger persons or property nor will the safe operating speeds or loads be exceeded. • All machinery or equipment will be shut down and positive means taken to prevent its operation while repairs or manual lubrications are being done. • All repairs on machinery or equipment will be made at a location that provides protection from traffic for repair persons. • Bulldozer and scraper blades, end-loader buckets, and similar equipment will be either fully lowered or blocked when being repaired or when not in use. • All self-propelled construction equipment shall be equipped with a back-up alarm.
	Exposure to hazardous material	• Continuous air monitoring for volatile organic compounds, combustible gas, and particulate will be performed during soil disturbance activities to determine need for engineering controls or upgrade of personal protective equipment.
	Falling objects	• Hardhats will be required for all personnel. • Never walk under suspended loads. Stay clear of material suspended overhead. • Barricade/tape area within swing radius of excavator.
	Cross-contamination and contact with potentially contaminated materials	• Wear proper protective clothing (Modified Level D) and equipment to safeguard against potential contamination. • Avoid skin contact with materials. • Only essential personnel will be in the work area. • All personnel will follow good hygiene practices. • Proper decontamination procedures will be followed. • All liquids and materials used for decontamination will be contained and disposed of in accordance with federal, state, and local regulations.
	Noise	• Sound levels above 85 dBA mandates hearing protection.

Table 5-1

Activity Hazard Analysis
RSA-227
Redstone Arsenal, Madison County, Alabama

Activity	Potential Hazards	Recommended Controls
Soil and wash rack removal/disposal (continued)	Faulty or damaged equipment	• Equipment shall be inspected before being placed into service and at the beginning of each shift. • Preventive maintenance procedures recommended by the manufacturer shall be followed. • A lock-out/tag-out procedure shall be used for equipment found to be faulty or undergoing maintenance.
	Contact with utilities	• All utilities shall be located and marked prior to excavation operations.
	Dump truck operations	• Dump truck bodies shall be fully lowered or blocked when maintenance is being performed or when not in use. • Dump trucks will have back-up alarms. • A signal person will be used when the point of operation is not in full view of the vehicle, machine or equipment operator; vehicles are backed more than 100 ft; terrain is hazardous; or 2 or more vehicles are backing in the same area. • Dump trucks will not be loaded in a manner that obscures the operator's view ahead or to either side or that interferes with the safe operation of the vehicle. • The load on every truck will be distributed, checked, tied down, or secured. • Loads will be covered when there is a hazard of flying/falling dirt, rock, debris, or material. • All dump trucks will be equipped with a holding device to prevent accidental lowering of the body. • All hoist levers will be secured to prevent accidental starting or tripping of the mechanism. • Trip handles for tailgates will be arranged to keep the operator in the clear.
	Property damage	• Visual surveys of road conditions, structures and load capacities shall be performed where dump truck operate. • Off road operating areas shall be surveyed for utility infrastructure i.e., valve boxes, man holes, etc. • Adequate barricades or flagging shall be used to prevent utility from damage by truck operations. • Trucks shall observe all RSA motor vehicle operating requirements.
	Struck by	• Personnel shall wear high visibility ANSI/ISEA Class III vest when working near moving equipment. • Truck drivers shall be instructed not to back until signaled to do so by designated spotter. • Truck drivers shall remain inside vehicle during loading operations. • Material shall not be swung over the cab of the dump truck during loading activities. • Ground personnel shall stay well clear of dump trucks during loading and dumping
	Hydraulic leaks	• Trucks with observed hydraulic leaks shall be removed from site until repaired. • Any lubricant or fuel related leaks shall be repaired immediately.
	Excavation	• Excavation area shall be barricaded to warn personnel and establish exclusion zone. • Excavation competent person shall inspect work area as often as necessary to ensure employee safety. • Spoil shall be cast as far as possible away from removal action. Sloping shall occur as needed for maintaining platform integrity. • Excavations shall be backfilled as soon as possible.

Table 5-1

Activity Hazard Analysis
RSA-227
Redstone Arsenal, Madison County, Alabama

Activity	Potential Hazards	Recommended Controls
Soil and wash rack removal/disposal (continued)	Loading equipment and materials	• All required U.S. Department of Transportation weight restrictions are applicable for operations on government facilities and installations. • Equipment and materials shall be properly contained, covered if required, and secured during transit. • Do not swing suspended materials over cabs of occupied trucks or personnel. • Avoid placing yourself opposite side from truck loading operations, operator cannot see you and material can fall outside bed of trucks.
	Inhalation of Portland cement or silica	• Essential personnel will position themselves upwind of concrete removal operation. • Dust suppression will be achieved by wetting the area during excavator attached ram hoe use.
	Noise	• Personnel in the area of ram hoe operation shall wear appropriate hearing protection.
	Flying debris	• Excavator operator will keep safety glass window on cab of excavator closed for added protection. • Ground personnel within 50 feet of ram hoe use will wear Level D PPE with a face shield. • Demolition debris will be used as appropriate to establish a barrier to deflect concrete chips.
	Cut hazard	• Personnel handling concrete debris and associated reinforcing steel shall wear heavy duty work gloves. • Utilize earthmoving machinery as much as possible to mitigate material handling by employees.
	Struck by equipment	• High visibility vest shall be worn by personnel exposed to equipment operation. • Do not position yourself where blind spots occur on heavy equipment. • Make eye contact with equipment operators before entering area and make sure operator acknowledges you are in the vicinity.
High-Pressure Water Jetting Operations	Fueling	• Only approved safety cans shall be used to store fuel. • Do not refuel equipment while it is operating. • Fire extinguishers shall be suitably placed, distinctly marked, readily accessible, and maintained in a fully charged and operable condition.
	Faulty or damaged equipment	• Equipment shall be inspected before being placed into service and at the beginning of each shift. • Preventive maintenance procedures recommended by the manufacturer shall be followed. • A lockout/tagout procedure shall be used for equipment found to be faulty or undergoing maintenance.
	High-pressure water	• Jetting gun operator must wear appropriate PPE including hard hat, impact-resistant safety glasses with side shields, water-resistant clothing, metatarsal guards for feet and legs, and hearing protection (if appropriate). • One standby person shall be available within the vicinity of the pump during jetting operation. • The work area shall be isolated and adequate barriers will be used to warn other site personnel.
	Unqualified operators	• Only qualified and trained personnel are permitted to operate machinery and mechanized equipment associated with water jet cutting and cleaning.

Table 5-1

Activity Hazard Analysis
RSA-227
Redstone Arsenal, Madison County, Alabama

Activity	Potential Hazards	Recommended Controls
High-Pressure Water Jetting Operations (continued)	Out of control equipment	• No machinery or equipment is permitted to run unattended. • Machinery or equipment will not be operated in a manner that will endanger persons or property nor will the safe operating speeds or loads be exceeded.
	Noise	• Sound levels above 85 dBA mandates hearing protection by nearby site personnel.
	Activation during repairs	• All machinery or equipment will be shut down and positive means taken to prevent its operation while repairs or manual lubrications are being done.
	Pinch points	• Keep feet and hands clear of moving/suspended materials and equipment. • Stay alert and clear of materials suspended.
	Falling objects	• Hard hats are required by site personnel. • Stay alert and clear of material suspended overhead.
	Flying debris	• Impact-resistant safety glasses with side shields are required.
	Contact with potentially contaminated materials	• All site personnel will wear the appropriate PPE. • Decontamination liquid and solids will be properly contained and disposed.
Moving and Shipping Collected Samples	Heavy lifting	• Use proper lifting techniques. Lifts greater than 50 pounds require assistance or mechanical equipment; size • up the lift.
	Pinch points	• Keep hands, fingers, and feet clear of moving/suspended materials and equipment. • Beware of contact points. • Stay alert at all times!
	Cut hazards	• Wear adequate hand protection. Use care when handling glassware.
	Hazard communication	• SDSs shall be obtained for chemicals brought on site. • Label all containers as to contents and hazard warning, and dispose of properly.
Material Storage	Flammable and combustible liquids	• Store in NO SMOKING AREA. • Fire extinguisher readily available. • Transfer only when properly grounded and bonded.

FIGURES

Figure 1

Typical HAZWOPER Site Controls

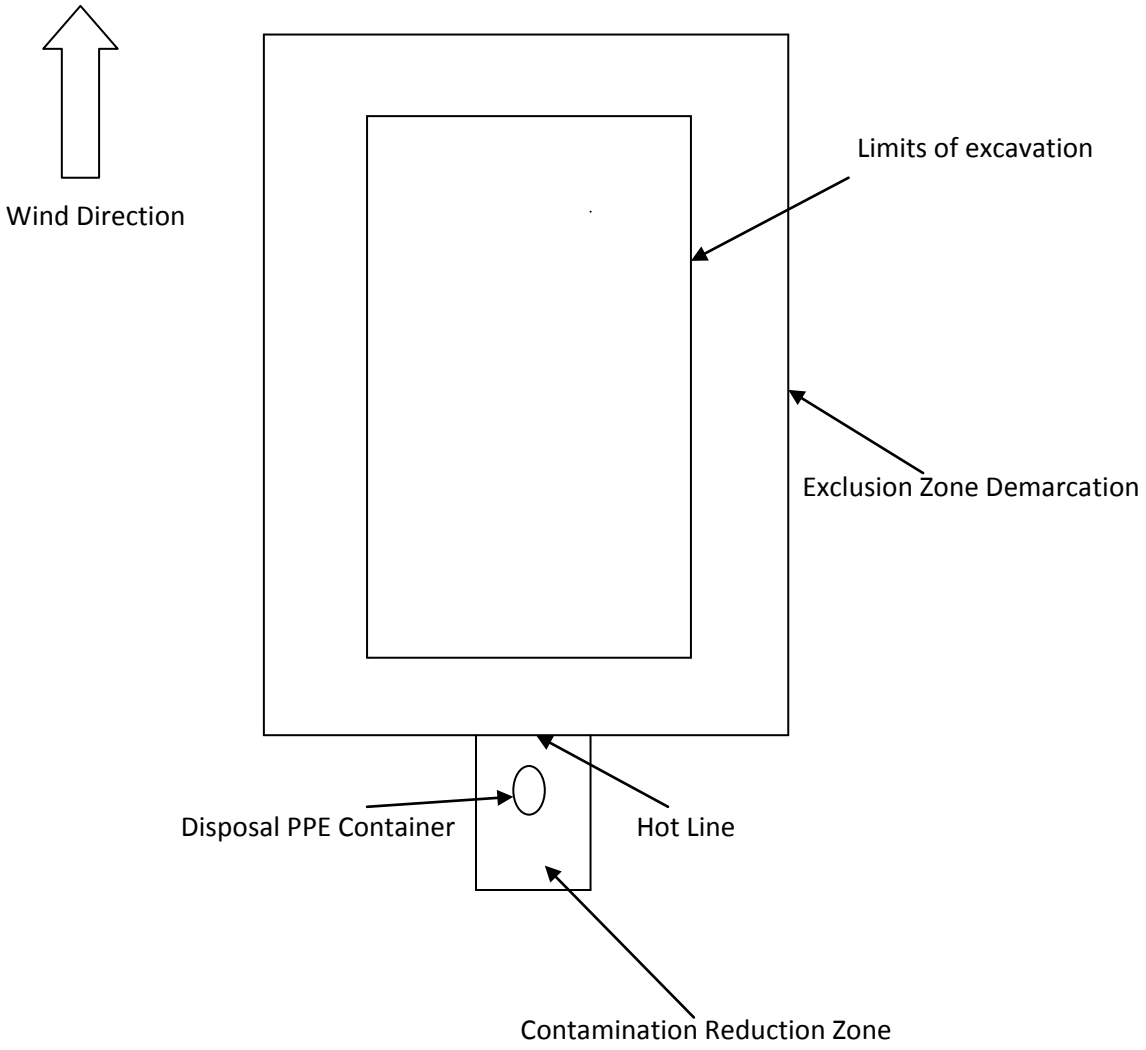

Notes: Typical HAZWOPER site controls will vary to site-specific conditions.
Exclusion zone demarcation may consist of flagging, barricade tape, fencing or other suitable visible barrier.
Exclusion zone will be large enough to accommodate earth moving machinery and sampling equipment.

Figure 2

RSA-227 Hospital Route Map

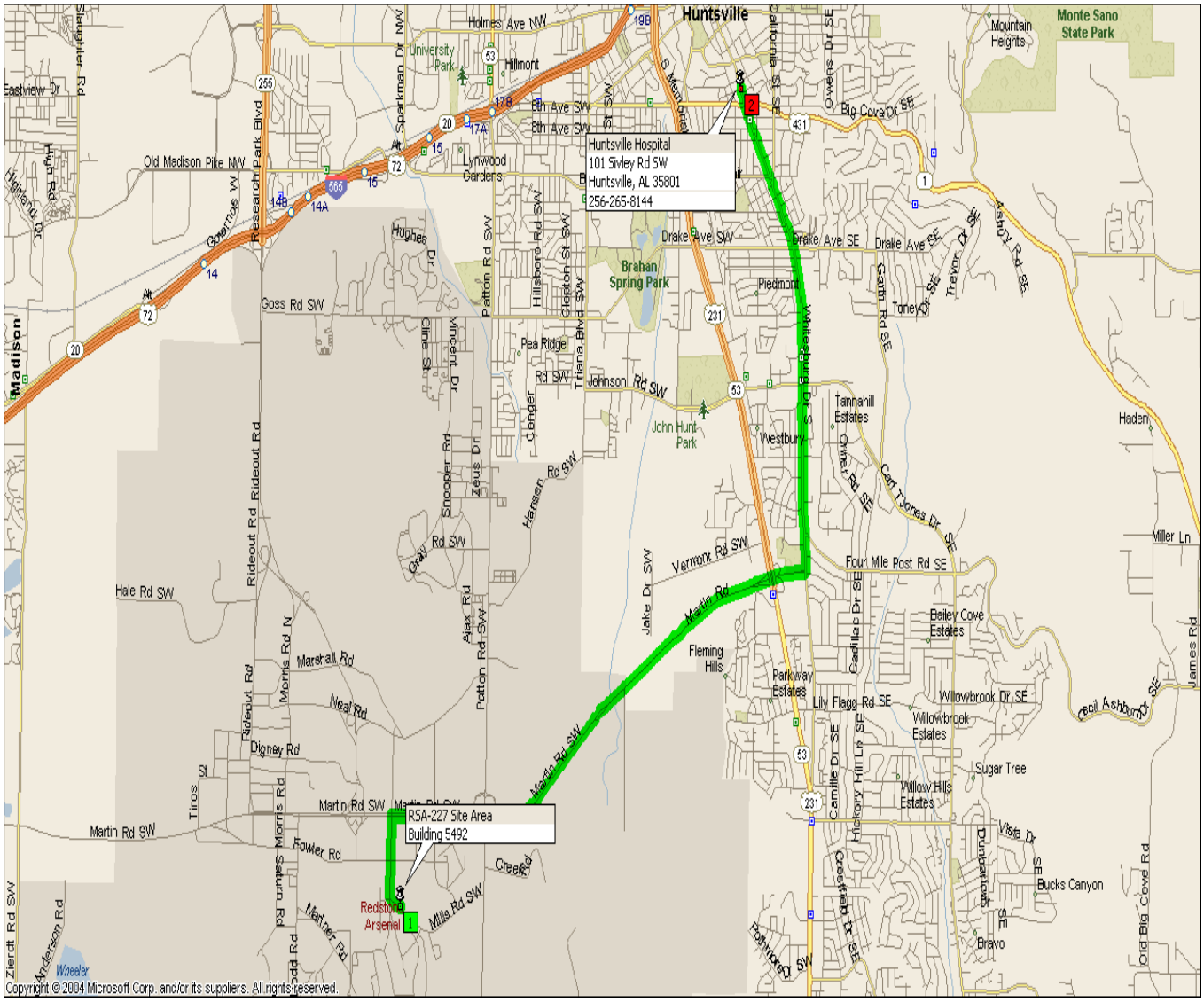

Mile	Instruction	For	Toward
0.0	Depart RSA-227 Site Area on Local road(s) (South)	32 yds	
0.1	Turn RIGHT (West) onto Mills Rd SW	0.7 mi	
0.7	Turn RIGHT (East) onto Martin Rd (SW)	5.0 mi	
5.8	Turn LEFT (North) onto Whitesburg Dr S	3.5 mi	
9.2	Road name changes to Madison St SE	0.1 mi	
9.3	Arrive Huntsville Hospital [101 Sivley Rd SW, Huntsville, AL 35801]		

Figure 3

RSA-227 Crestwood Family Practice Route Map

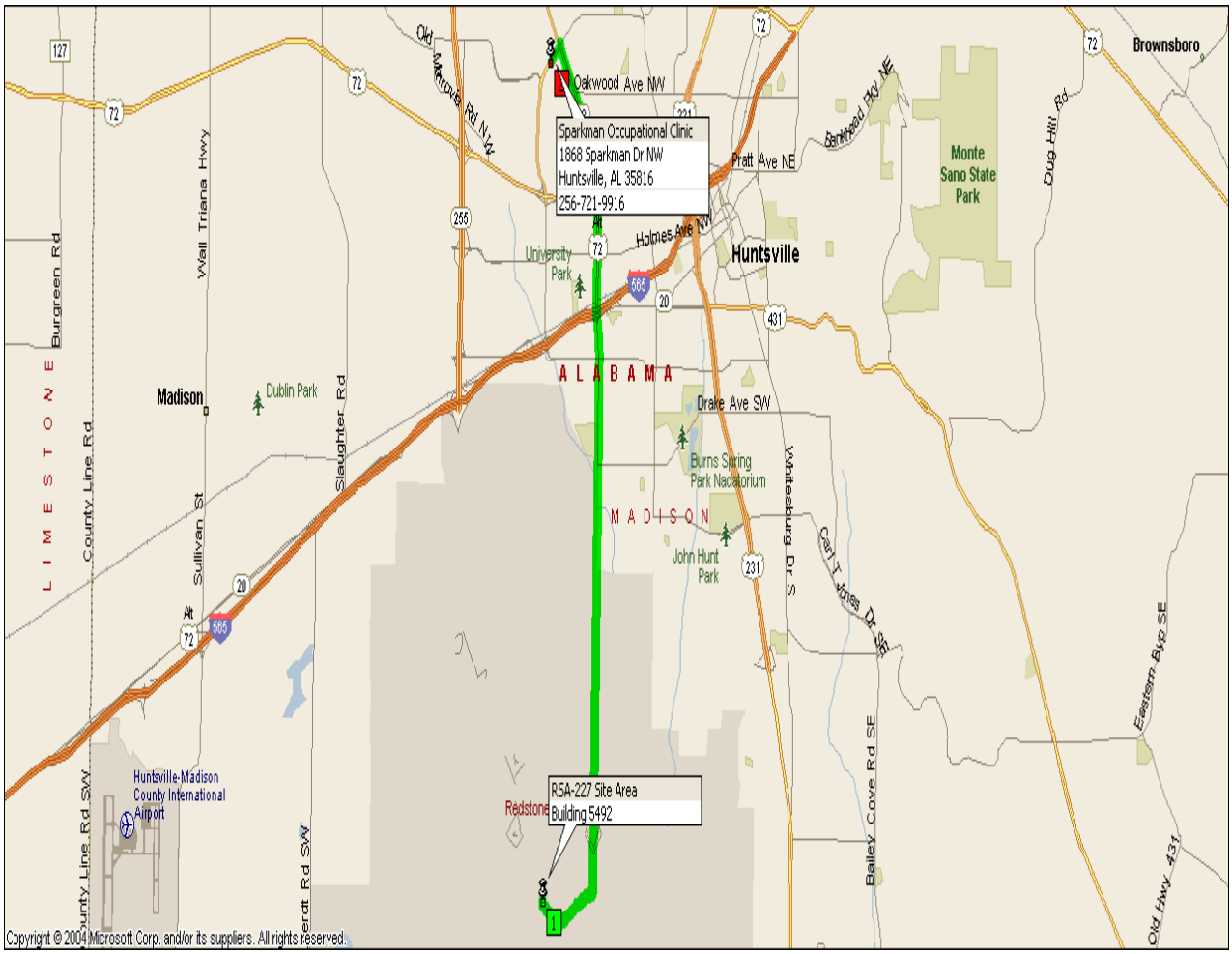

Mile	Instruction	For	Toward
0.0	**Depart RSA-227 Site Area on Local road(s) (South)**	**54 yds**	
0.1	Turn LEFT (East) onto Mills Rd SW	1.0 mi	
1.1	Turn LEFT (North) onto Patton Rd SW	5.1 mi	
6.2	Road name changes to Jordan Ln (SW)	0.4 mi	
6.6	Road name changes to US-72 Alt [SR-53]	1.2 mi	
7.7	Road name changes to SR-53 [Jordan Ln NW]	1.6 mi	
9.3	Turn LEFT (South-West) onto Sparkman Dr NW	0.2 mi	
9.6	**Arrive Crestwood Family Practice Clinic [1868 Sparkman Dr NW, Huntsville, AL 35816]**		

Figure 4

RSA-227 Crestwood Workers Care Madison Route Map

Mile	Instruction	For	Toward
0.0	**Depart RSA-227 Site Area on Local road(s) (South)**	**65 yds**	
0.1	Turn RIGHT (West) onto Mills Rd SW	0.7 mi	
0.8	Turn LEFT (West) onto Martin Rd SW	0.3 mi	
1.1	Bear RIGHT (North-West) onto Ramp	0.3 mi	Toftoy North
1.4	Bear RIGHT (North) onto Toftoy Throughway	1.6 mi	
3.0	Take Ramp (RIGHT) onto Rideout Rd	2.5 mi	Rideout Rd North / Gate 9
5.5	Road name changes to SR-255 [Research Park Blvd]	0.1 mi	
5.6	Take Ramp (RIGHT) onto I-565 [US-72 Alt]	1.0 mi	I-565 / I-65 / Decatur
6.6	At exit 13, turn RIGHT onto Ramp	0.7 mi	Madison Blvd
7.3	Bear RIGHT (West) onto US-72 Alt [SR-20]	0.9 mi	
8.2	**Arrive Crestwood Workers Care Madison**		

SUMMARY

Driving distance: 8.2 miles
Trip duration: 13 minutes
Driving time: 13 minutes

ATTACHMENT 1

EVALUATING MEC/CWM/CA HAZARDS IN SUPPORT OF HTRW ACTIVITIES

OU Number: OU-6 **Date: 12/14/15** **Name of person completing form: Doug Russell**

Site Name: RSA-227 **Title: HSE Manager**

Job Number: 147104 **Signature:** _____

	Yes	No
1a. Have the historical records available for this HTRW site been reviewed?	☒	☐

If the answer to **1a.** is yes, proceed to **1b.**
If the answer to **1a.** is no, review site information prior to completing this form.

	Yes	No
1b. Is there recent information (site walk, worker interviews, etc.) that indicates a potential MEC/CWM hazard at this site?	☐	☒

Proceed to **2**.

2. According to the records review, this site is known or suspected to have been used for:

	Yes	No
2a. Manufacturing, production, or shipping of conventional MEC:	☐	☒
Live fire testing of any conventional ordnance:	☐	☒
Conventional MEC training:	☐	☒
Storage of conventional MEC:	☐	☒
Disposal or demilitarization of conventional MEC:	☐	☒

Other (specify):

	Yes	No
2b. Manufacturing, production, or shipping of chemical agent:	☐	☒
Research or testing of chemical agent:	☐	☒
Chemical agent related training:	☐	☒
Storage of chemical agent:	☐	☒
Disposal or demilitarization of chemical agent:	☐	☒
Live fire testing of any CWM ordnance:	☐	☒

Other (specify):

Any **2a** question answered "YES" indicates UXO support is required for all site activities. If all **2a** questions are answered "NO", UXO support may not be required. Refer to Installation-Wide Accident Prevention Plan (APP) for additional information concerning UXO support. Proceed to question **2b**.

Any **2b** question answered "YES" requires the remainder of this form to be completed. If all **2b** questions are answered "NO", near real-time monitoring for chemical agent will not be required and completing the remainder of this form is not required. Refer to SSHP for additional information concerning agent monitoring.

Continue to page 2 of 5

OU Number: OU-6 **Site Name: RSA-227**
Job Number: 147104 **Date: 12/14/15**

3. For sites where the manufacturing, testing, storage, or disposal of CWM is suspected:	**Yes**	**No**
Is there evidence that the CWM is/was containerized in potentially unexploded ordnance:	☐	☐
Is there evidence that the CWM is/was containerized in nonexplosive containers:	☐	☐
Is there evidence that the CWM is open to the environment (i.e., in an open container or free liquid/solid in the soil/water):	☐	☐
Is there evidence that the CWM hazard has been removed from the site or that the site has been decontaminated:	☐	☐
Has the site been previously monitored or sampled for chemical agent or agent breakdown products:	☐	☐
For any "YES" above, was the agent or breakdown product identified?	☐	☐

For any "Yes", list types of agent (mustard, lewisite, etc.) and the form (in MEC, in drum, etc.) the CWM is expected to be found (or state "unknown"):

Agent:

List agent breakdown products identified:

Continue to page 3 of 5 -

OU Number: OU-6 **Site Name: RSA-227**
Job Number: 147104 **Date: 12/14/15**

4. Defining the Potential for the Presence of CWM:	**Agent Monitoring Requirements for Site Activities:**
4a. Frequent Presence Potential – Definition: Occurs very often, continuously experienced. CWM is known or to be present at the site in a condition (within MEC and/or nonexplosive container, or in an uncontainerized form in sufficient volume that weathering of the product has not rendered it harmless) that will cause potential harm to personnel if it is encountered.	Mandatory personal and perimeter air monitoring using the DAAMS, MINICAMS, and RTAP collection/analysis methods with off-site surety laboratory confirmation of all environmental samples. Specific monitoring criteria (equipment types and sampling station placement, percentage of personnel monitored, etc.) to be established in the Site Specific Safety and Health Plan (SSHP).
4b. Likely Presence Potential – Definition: Occurs several times. CWM is known or highly suspected to be present at the site in a condition (within MEC and/or nonexplosive container, or in an uncontainerized form in sufficient volume that weathering of the product has not rendered it harmless) that will cause potential harm to personnel if it is encountered.	Mandatory personal and perimeter air monitoring using the DAAMS, MINICAMS, and RTAP collection/analysis methods with off-site surety laboratory confirmation of all environmental samples. Specific monitoring criteria (equipment types and sampling station placement, percentage of personnel monitored, etc.) to be established in the Site Specific Safety and Health Plan (SSHP).
4c. Occasional Presence Potential - Definition: Occurs sporadically. CWM is suspected to have been present at the site, but has been previously removed and/or decontaminated, or has been open to the environment such that it is expected to have degraded and been rendered harmless.	The need for personal and perimeter air monitoring using the DAAMS, MINICAMS, and RTAP collection/analysis methods with off-site surety laboratory confirmation of all environmental samples will be reviewed on a site-by-site basis. Specific monitoring criteria (equipment types and sampling station placement, percentage of personnel monitored, etc.) to be established in the Site Specific Safety and Health Plan (SSHP).
4d. Seldom Presence Potential - Definition: Remotely possible; could occur at some time. CWM is suspected to have been present at the site, but has been previously removed and/or decontaminated, or has been open to the environment such that it is expected to have degraded and been rendered harmless.	The need for personal and perimeter air monitoring using the DAAMS, MINICAMS, and RTAP collection/analysis methods with off-site surety laboratory confirmation of all environmental samples will be reviewed on a site-by-site basis. Specific monitoring criteria (equipment types and sampling station placement, percentage of personnel monitored, etc.) to be established in the Site Specific Safety and Health Plan (SSHP).
4e. Unlikely Presence Potential – Definition: Can assume will not occur, but not impossible. No indications that CWM will be present in quantity or reactivity (in munitions, projectiles, drums, etc.).	No specific personal or area monitoring for chemical agents required beyond what is specified in the SSHP.

Continue to page 4 of 5

OU Number: OU-6 **Site Name: RSA-227**

Job Number: 147104 **Date: 12/14/15**

5. Based on the information provided in questions 1 through 5, above, the following guidelines will be used for establishing PPE requirements for activities to be performed at this site; Specific details are provided in the SSHP:	
5a. High Exposure Potential - High exposure potential is determined by evaluating the potential presence of CWM in conjunction with the task(s) to be performed, as well as the specific location and duration of the task(s).	Subject to review by the CB&I health and safety manager, PPE for all personnel in the exclusion zone at a site identified as having a "High Exposure Potential" will be Level B (supplied air) or Level C (full-face NIOSH approved CBRN respirator with CBRN cartridges) and chemically resistant coveralls. Specific PPE requirements are in the SSHP for this site.
5b. Moderate Exposure Potential - Moderate exposure potential is determined by evaluating the potential presence of CWM in conjunction with the task(s) to be performed, as well as the specific location and duration of the task(s).	Subject to review by the CB&I health and safety manager, PPE for all personnel in the exclusion zone at a site identified as having a "Moderate Exposure Potential" will be Modified Level D (disposable coveralls and NIOSH approved CBRN escape respirator) carried by all personnel. Specific PPE requirements are in the SSHP for this site.
5c. Low Exposure Potential - Low exposure potential is determined by evaluating the potential presence of CWM in conjunction with the task(s) to be performed, as well as the specific location and duration of the task(s).	Subject to review by the CB&I health and safety manager, no additional PPE requirements above those stated in the SSHP are needed for sites identified as having "Low Exposure Potential." Specific PPE requirements are in the SSHP for this site.

Review of available information indicates the presence potential at this site is considered to be:
MEC No Exposure Potential
CWM Unlikely Presence Potential / Low Exposure Potential
Exceptions/Explanations:

Review Signatures:
CB&I UXO Technical Manager _____ Date: 3/22/16 CB&I H&S Specialist _____ Date: 12/14/15

OU Number: OU-6 **Site Name: RSA-227**

Job Number: 147104 **Date: 12/14/15**

Additional Notes and Explanations:

RSA-227 occupies approximately 0.04 acre and is located adjacent to Building 5492, north of Mills Road in the maintenance shop complex (Buildings 5494/5495). The area lies above groundwater unit RSA-147, which covers approximately 1,300 acres in the central portion of RSA. RSA-227 includes an inactive wash rack and sump on the south side of Building 5492 in a developed and paved area. RSA-227 also consists of maintained grass and gravel areas. A partial chain-link fence is located south of the sump within the site boundary. Site drainage is controlled by an unlined drainage ditch to the south of RSA-227. This drainage ditch collects runoff from the northwest of RSA-227 and the east of RSA-227 and directs the combined flow to another drainage ditch that extends south of RSA-227. The drainage ditch located outside the boundary of RSA-227 will be referred to as the Ditch in this report.

ATTACHMENT 2

CB&I PROCEDURE CMS-710-02-PR-01600, EXCAVATION AND TRENCHING

PROCEDURE

Procedure Title:	**Excavation and Trenching**	**CMS Number:**	**CMS-710-02-PR-01600**
Procedure Owner:	**HSE**	**Issuing Authority:**	**VP Global HSE**

EXCAVATION AND TRENCHING

6	Issued for Use - Removed hyperlinks from document	LDJ	22 Oct 2014
5	Issued for Use – Added hyperlink and reference to new WI, see section 4.1.3. (See Rev bars.)	JPO	19 Nov 2013
4	Issued for Use – Total re-write. (No Rev Bars)	JPO	20 Jun 2013
3	Issued for Use – Section 4.1.3 and 4.1.4 added for clarification, no change in requirements. Issuing Authority Approval not required. (See Rev Bars)	RLL	22 Jan 2013
2	Issued for Use – Corrected metric conversions. No content change. Issuing Authority Approval not required.	LDH	18 Aug 2011
1	Issued for Use – Revised 1.0 Changed HSSE to HSE & Put In New Template- No Change to Content (No Rev Bars). Issuing Authority Approval not required	LDH	03 Jun 2010
0	Issued for Use	JPO	30 May 2008
Rev	**Changes**	**Approved**	**Date**

"©Chicago Bridge & Iron Company, 2009. All Rights Reserved. For Internal Use Only.
NOTICE: THIS DOCUMENT, AND ALL TEXT, DRAWINGS, DETAILS AND DATA SHOWN HERETO, IS THE SOLE PROPERTY OF CHICAGO BRIDGE & IRON COMPANY, AND SHALL NOT BE REPRODUCED IN ANY MANNER, USED FOR ANY PURPOSE WHATSOEVER, OR RELEASED TO ANYONE EXCEPT BY EXPRESS WRITTEN PERMISSION OF CHICAGO BRIDGE & IRON COMPANY."

1.0 PURPOSE

The purpose of this Procedure is to establish the minimum requirements for the use of Excavation and Trenching on CB&I sites.

2.0 SCOPE

This procedure applies to all CB&I employees, contractors, subcontractors, and visitors associated with a CB&I site.

3.0 RESPONSIBILITIES

The following personnel have responsibilities defined in this procedure:

- CB&I Managers
- CB&I Supervisors
- CB&I Employees
- CB&I Contractors
- CB&I Subcontractors
- CB&I Visitors

4.0 PROCEDURE

This procedure shall establish the minimum requirements for work, activities, inspections, and training, required for work in and around excavation and trenching operations on CB&I sites. This procedure will also apply to all CB&I subcontractors.

4.1 General

4.1.1 A designated Competent Person shall be onsite at all times when excavation activities are conducted.

4.1.2 Before any excavation can be started, an Excavation Permit (CMS-710-02-FM-01601) must be completed by the responsible Superintendent with input from the Authorized Person for underground testing (utility identification) and the Excavation Competent Person. Appropriate Client approval is also necessary where required by Client regulations. Client and/or utility company representatives shall be notified 24 hours prior to beginning excavations.

4.1.3 Underground Storage Tank (UST) Removal

CMS-710-02-WI-01601 contains specific instructions for trenches and excavations relating to UST removal.

4.1.4 Underground Utilities

4.1.4.1 At least 3 feet (0.9144 m) of clearance between any underground utility and the cutting edge or point of powered excavation equipment will be maintained until the precise location of the utility is determined. Initial excavation within this 3 foot area will be conducted manually.

4.1.4.2 All utilities exposed during an excavation will be protected from accidental damage.

4.1.4.3 The underground utilities information obtained shall be provided to affected personnel via the job safety analysis (JSA). Underground utilities information, in relation to proposed excavation work, means the following information about underground essential services that may be affected by the excavation:

- The utilities that may be affected
- The location, including the depth, of any pipes, cables or other plant associated with the affected essential services

- Any conditions on the proposed excavation work.

4.1.4.4 Any essential services information obtained must be readily available for inspection. The information must be available:

- For at least 2 years after the incident occurs
- In every other case, until the excavation work is completed.

4.1.5 The work area around a excavation over 4 feet (1.2 m) deep shall be, so far is reasonably practicable, secured from unauthorized access (including inadvertent entry).

4.1.6 When mobile equipment is operated adjacent to an excavation, and the operator does not have a clear and direct view of the edge of the excavation, a warning system shall be utilized such as barricades, hand or mechanical signals, or stop logs.

4.1.7 Soil classification shall be made by the Competent Person or a registered Professional Engineer trained in soil classification. Unclassified soil shall be assumed to be Class "C" and will be sloped 1½:1 or shored when the excavation exceeds 4 feet (1.2 m) in depth.

4.1.8 Each employee in an excavation shall be protected from cave-ins. Excavations over 4 feet (1.2 m) deep shall be shored, sloped, or benched as required. Excavations and the work scheduled to be performed in the excavation shall be evaluated by the Competent Person to determine if the shoring, sloping, or benching needs to begin at a depth less than 4 feet (1.2 m).

4.1.9 Shoring for excavations over 20 feet deep (6 m) shall be designed by a registered Professional Engineer and shoring installed shall be approved and signed off by a registered Professional Engineer.

4.1.10 Spoils must be placed a minimum of 3 feet (0.9 m) from the edge of the excavation. Loose soil or rocks shall be removed from the sides of excavation walls.

4.1.11 Excavations 4 feet (1.2 m) in depth or greater, shall have a stairway, ladder, ramp, or other safe means of egress within 25 feet (7.6 m) of any employee. Excavations that are less than 4 feet (1.2 m) in depth shall have safe access and egress for all employees with a maximum break in elevation of 19 inches (48.3 cm).

4.1.12 Structural ramps that are used solely by employees as a means of access or egress from excavations shall be designed by a competent person.

4.1.13 Structural ramps used for access or egress of equipment shall be designed by a competent person qualified in structural design, and shall be constructed in accordance with the design.

4.1.14 Excavations shall be inspected by a Competent Person and the results recorded on CMS-710-02-FM-01602 Daily Inspection Form:

4.1.14.1 Prior to entry

4.1.14.2 After rain or snowfall

4.1.14.3 After freezing and/or thawing temperatures occur

4.1.14.4 After any condition that can change the integrity of the soil

4.1.15 During rainy weather, work in excavations shall cease until the Competent Person has evaluated the excavation and the effect of the rain on the excavation. The Competent Person will maintain a regular inspection schedule to ensure the excavation stability and condition during rain events if employees continue to work in the excavation. Depending on the amount of rainfall, the duration of the rainfall and the soil type, the Competent Person may need to maintain continuous observation of the excavation conditions.

4.1.16 For excavations that have the potential for oxygen deficiency or to contain hazardous atmosphere, an atmosphere evaluation shall be performed. This test will be performed by the Construction HSE Manager or their designee. Indications of the potential for a hazardous atmosphere include, but are not limited to: gas lines, sewer lines, areas with hydrocarbons, and proximity to emissions sources for H_2S, SO_2, CO, CO_2 and other gases that are heavier than air. Excavations with hazardous atmospheres should be treated as a confined space.

4.1.17 Excavations shall be evaluated for hazards in addition to cave-in potential and atmospheric hazards. Electrical sources, energized (pressurized) pipes, underground tanks, etc. may also present a hazard to employees who are required to enter an excavation.

4.1.18 The Competent Person responsible for the crew working in the excavation shall inspect the excavation throughout the work period, record the observations on CMS-710-02-FM-01602, and stop operations when unsafe conditions exist.

4.1.19 Water shall not be allowed to accumulate in excavations at any time. Pumps, drains, or other means shall be used to remove water constantly.

4.1.20 Where the stability of adjoining buildings, walls, or other structures is endangered by excavation operations, support systems shall be provided, such as shoring, bracing, or underpinning to ensure the stability of such structures. Excavation below the level of the base or footing of any foundation or retaining wall that could be reasonably expected to pose a hazard to employees shall not be done unless:

- A support system, such as underpinning, is provided to ensure the safety of employees and the stability of the structure;
- The excavation is in stable rock;
- A registered professional engineer has determined that the structure is sufficiently removed from the excavation so that it will be unaffected by the excavation activity; or
- A registered professional engineer has determined that such excavation work will not pose a hazard to employees.

4.1.21 Sidewalks, pavements and appurtenant structures shall not be undermined unless a support system or another method of protection is provided to protect employees from the possible collapse of such structures. The support system shall be capable of withstanding a minimum live load of 125 lb/ft.

4.1.22 Emergency rescue plans shall be developed and rescue equipment shall be readily available.

4.1.23 Employees will not be permitted to work under loads or near digging equipment.

4.1.24 Employees exposed to falls by excavation crossings and walkways will be provided with fall protection in accordance with Procedure CMS-710-02-PR-00900 - Fall Protection.

4.2 Training

4.2.1 Employee Training

4.2.1.1 Each employee who works in or around an excavation shall be trained to recognize potential hazards associated with excavations: cave-in potential, fall hazards, safe entry and exit, proximity to excavating equipment, air quality, back-filling and compacting activities, protective systems, etc. This training shall be documented and records maintained in the Site HSE files

4.2.1.2 Each individual assigned as an Excavation Competent Person shall have documented training or shall have documentation of experience and qualifications in excavation activities.

5.0 REFERENCES

29 CFR (Code of Federal Regulation) 1926.650 - 1926.652	Fall Protection
CMS-710-02-PR-00900	Fall Protection
CMS-710-02-WI-01601	Underground Storage Tank Removal

6.0 TERMINOLOGY

Term	***Definition***
Accepted Engineering Practices	Those requirements that are compatible with standards of practice required by a registered professional engineer.
Authorized Person for Underground Testing	The person(s) designated by the Construction Manager to identify underground utilities using a combination of blue prints and underground testing equipment. This individual shall coordinate excavation activities with the Client (as applicable) and outside utility companies. Several individuals (such as the Piping Superintendent, Electrical Superintendent, Equipment Superintendent, and Field Engineer) may serve as Authorized Persons as necessary.
Benching (Benching system)	A method of protecting employees from cave-ins by excavating the sides of an excavation to form one or a series of horizontal levels or steps, usually with vertical or near-vertical surfaces between levels.
Cave-In	The separation of a mass of soil or rock material from the side of an excavation, or the loss of soil from under a trench shield or support system, and its sudden movement into the excavation, either by falling or sliding, in sufficient quantity so that it could entrap, bury, or other wise injure and immobilize a person.
Competent Person	One who is capable of identifying existing and predictable hazards in the surroundings, or working conditions which are unsanitary, hazardous, or dangerous to employees, and who has authorization to take prompt corrective measures to eliminate them.
Excavation	Any man-made cut, cavity, trench, or depression in an earth surface, formed by earth removal.
Excavation Competent Person	A person capable of identifying existing and predictable hazards in the surroundings or working conditions which are unsanitary, hazardous, or dangerous to employees, and who has authorization to take prompt corrective measures to eliminate them. The Construction Manager and Construction HSE Manager shall designate the Competent Person in writing and their qualifications shall be documented.
Hazardous Atmosphere	An atmosphere which by reason of being explosive, flammable, poisonous, corrosive, oxidizing, irritating, oxygen deficient, toxic, or otherwise harmful, may cause death, illness, or injury.
Protective System	A method of protecting employees from cave-ins, from material that could fall or roll from an excavation face, into an excavation, or from the collapse of adjacent structures. Protective systems include support systems, sloping and benching systems, shield systems, and other systems that provide the necessary protection.

Ramp	An inclined walking or working surface that is used to gain access to one point from another, and is constructed from earth or from structural materials such as steel or wood.
Registered Professional Engineer	A person who is registered as a professional engineer in the state where the work is to be performed. However, a professional engineer, registered in any state is deemed to be a “registered professional engineer” within the meaning of this standard when approving designs for "manufactured protective systems" or “tabulated data” to be used in interstate commerce.
Shoring (Shoring System)	A structure such as a metal hydraulic, mechanical or timber shoring system that supports the sides of an excavation and which is designed to prevent cave-ins.
Site	Any location, facility or project where CB&I is performing work. Sites may include, but are not limited to, laboratories, offices, shops, owned facilities, leased facilities and/or project sites.
Sloping (Sloping System)	A method of protecting employees from cave-ins by excavating to form sides of an excavation that are inclined away from the excavation so as to prevent cave-ins. The angle of incline required to prevent a cave-in varies with differences in such factors as the soil type, environmental conditions of exposure, and application of surcharge loads.
Stable Rock	Natural solid mineral material that can be excavated with vertical sides and will remain intact while exposed. Unstable rock is considered to be stable when the rock material on the side or sides of the excavation is secured against caving-in or movement by rock bolts or by another protective system that has been designed by a registered professional engineer.
Structural Ramp	A ramp built of steel or wood, usually used for vehicle access. Ramps made of soil or rock is not considered structural ramps.
Trench (Trench Excavation)	A narrow excavation (in relation to its length) made below the surface of the ground. In general, the depth is greater than the width, but the width of a trench (measured at the bottom) is not greater than 15 feet (4.6 m). If forms or other structures are installed or constructed in an excavation so as to reduce the dimension measured from the forms or structure to the side of the excavation to 15 feet (4.6 m) or less (measured at the bottom of the excavation), the excavation is also considered to be a trench.

7.0 EXHIBITS

Exhibit 7.1	CMS-710-02-FM-01601 – Excavation Permit
Exhibit 7.2	CMS-710-02-FM-01602 – Daily Excavation Inspection Form
Exhibit 7.3	CMS-720-01-FM-00020 – Business Glossary
Exhibit 7.4	CMS-720-01-FM-00021 – Technical Glossary

8.0 ATTACHMENTS

None

ATTACHMENT 3

CB&I INCIDENT REPORTING AND MANAGEMENT PROCEDURE – FEDERAL

CBI Incident Notification, Reporting, and Management Procedure

Directions, Notes, and Reminders

- **Follow this procedure step-by-step for all incidents.**
- **This procedure has limited application to subcontractors. Assist subcontractors with medical emergencies (as applicable) and then immediately notify the Program H&S Manager for guidance.**
- **Periodically review this procedure in order to be familiar with the steps - prior to an incident occurring.**
- **For injuries and vehicle accidents, secure the scene to prevent additional injury/incident, administer on-site first aid, and arrange for emergency assistance prior to making any other notifications.**
- **The Site Supervisor is responsible for making all other notifications to:**
  - **CORE Health Networks (must be notified while employee is en route to medical care facility): (225) 756-2673**
  - **CB&I Help Desk / Hot Line: 866-299-3445**
  - **Project Manager: Art Holcomb 256-213-2188 (office) 256-783-8478 (cell)**
  - **Marcia Musgrave: 419-425-6160.**
- **The Site Supervisor (or SSHO) is responsible for notifying the Program H&S Manager or Alternate H&S Manager by telephone prior to making any other notifications (other than calling 911 and CORE).**
- **The Site Supervisor or SSHO shall accompany all injured personnel to the CORE clinic or to the hospital emergency room.**
- **The Project Manager shall notify the Program Manager in person or by telephone no later than two hours after the incident and the U.S. Army Garrison Chief, Installation Restoration Branch (256) 955-6968.**
- **All incident reports shall be completed by typing (when feasible and applicable).**
- **All incident reports shall be submitted (email or fax) to the Program H&S Manager or Alternate H&S Manager for review and distribution.**

Incident Notification, Reporting, and Management Procedure

Action	Who / When	Under what circumstances	How	Notes
1. Notify Site Supervisor for all incidents (no matter how minor)	Injured person, first person recognizing incident, driver/passenger, or employee causing damage *Immediately*	All incidents no matter how minor (including minor cuts, scratches, minor strains/sprains, and insect bites)	In person or by telephone	Site Supervisor to make note of very minor incidents (such as band-aid over scratch) in field logbook
2. For *life-threatening injuries / illnesses* - make scene safe, contact local emergency personnel For *non life-threatening injuries / illnesses* - make scene safe, transport injured person to doctor at an occupational medical facility See SSHP Clinic Route Map and Directions For *vehicle accidents* – make scene safe, notify police, aid injured parties For *equipment / property damage* - make scene safe, prevent further damage or injuries	Site Supervisor *Immediately (concurrently with next step if injury or illness)* Site Supervisor *Immediately (concurrently with next step if injury or illness)* Driver/passenger *Immediately* Employee causing damage *Immediately*	In case of serious injury or illness requiring off-site medical care	Via ambulance Via vehicle	Site Supervisor or Site Safety Officer must immediately go to emergency care facility. Follow HS101 post accident alcohol and drug testing procedure. Site Supervisor or Site Safety and Health Officer must transport and stay with injured person until released from care. Make medical personnel aware of CB&I "restricted work will be provided" and "no prescriptions if possible" policies. CORE clinics are the preferred urgent care facilities when possible, unless injury is severe and victim is transported by ambulance.
3. Notify CORE Health Networks (for injuries / illnesses to CB&I employees only)	Site Supervisor *Immediately, prior to transporting the injured employee, unless injuries are life threatening*	• Serious injury requiring off-site medical care • If employee states that he/she has been exposed to any chemical or biological substance • If illness is work related	CORE Medical **(225) 756-2673** Note: Outside Continental US call: **225-614-9561**	Not required for temporary agency and subcontractor labor Provide name of injured employee, name and phone # of treating medical facility, description of the incident CORE will help with medical facility coordination and follow-up care

Action	Who / When	Under what circumstances	How	Notes
4. Notify Program H&S Manager (if unsure, see contact list) Notify Alternate H&S Manager if Program H&S Manager cannot be contacted. (if unsure, see contact list)	Site Supervisor *Immediately (concurrently with providing transportation to occupational medical facility or EMS transport to hospital)*	All incidents except on-site first aid cases	See Incident Notification and Communication Contact List (attached)	Program H&S Manager will notify H&S Director
5. Notify CFS Notification Hotline / Help Desk	Site Supervisor *As soon as possible. Prior to sending an individual for medical treatment*	• Illness and/or injury (doctors cases and above) • Any utility damage • Property damage (damage > $2,500.00) • Vehicle accidents (All) • Criminal activity (i.e. bomb threat, theft) • Natural disaster (all) • Explosion and/or fires (damage > $2,500.00 or result in injury) • Environmental spills/releases (incidents that requires regulatory notification or have an offsite impact) • Regulatory agency visit • Fatalities	CB&I CFS Notification Hotline / Help Desk Phone Number: 866-299-3445 Note - Outside the Continental US call: 225-215-5056	Request name of Hotline / Help Desk operator for future reference and note date/time of notification
6. Complete forms: *Injuries and illnesses*: • Authorization for Release of Protected Medical Information • Authorization for Treatment of Occupational Injury/Illness • Return-To-Work Examination Form *and* fax to CORE *and* email or fax to Program H&S Manager	Injured employee and medical facility personnel (Site Supervisor or Site Safety and Health Officer is responsible for verifying forms are completed) *Prior to leaving medical facility*	• Serious injury requiring off-site medical care • If employee states that he/she has been exposed to any chemical or biological substance	Fax to CORE: 225.292.8986 Email or fax to Program H&S Manager	Site Supervisor or Site Safety and Health Officer must take these forms with him/her to occupational medical facility or hospital Contact Program H&S Manager for blank electronic forms

Action	Who / When	Under what circumstances	How	Notes
7. Call Project Manager and notify of incident (Remind Project Manager of notification responsibilities to Program Manager)	Site Supervisor *As soon as reasonably possible*	If Hot Line / Help Desk notification is required (see # 5 above)	See Incident Notification and Communication Contact List	Project Manager will verbally report incident to upper level of Operations/Business Line Management *As soon as reasonably possible*
8. Notify Marcia Musgrave	Site Supervisor	All incidents involving personnel (injuries, illnesses, vehicle accidents)		
9. Call back Program H&S Manager to report on status of *injured / ill employee*	Site Supervisor *Prior to employee leaving medical facility*	All injuries and illnesses requiring off-site medical care	See Incident Notification and Communication Contact List (attached)	
10. Complete forms (typed electronically): *OSHA Recordable Cases* • Supervisor's Employee Injury/Illness Report Form • Injured Employee Statement • Witness Statement Form(s) *First Aid Cases (Doctor's)* • Supervisor's Employee Injury/Illness Report • Injured Employee Statement • Witness Statement Form(s) Email or Fax completed forms to Program H&S Manager and CORE	• Site Supervisor • Witnesses *As soon as possible – no later than 24 hours*	All injuries, illnesses, and first aide cases	Email or fax to Program H&S Manager See Incident Notification and Communication Contact List (attached) Fax to CORE 225.292.8986	Site Supervisor should have these forms with him/her at all times Contact Program H&S Manager for blank electronic forms

Action	Who / When	Under what circumstances	How	Notes
11. Complete forms (typed electronically): *Chargeable Vehicle Accidents* • Vehicle Accident Report • Witness Statement Form(s) • Driving Record Certification (Procedure HS800) *Non-Chargeable Vehicle Accidents* • Vehicle Accident Report • Witness Statement Form(s) *Equipment, Property Damage and General Liability Incidents* • Equipment, Property Damage and General Liability Loss Report • Witness Statement Form(s) Email or Fax completed forms to Program H&S Manager	• Site Supervisor • Witnesses *As soon as possible – no later than 24 hours*	All vehicle accidents and /or all property damage	Email or fax to Program H&S Manager Health See Incident Notification and Communication Contact List (attached)	Supervisor should have these forms with him/her at all times Contact Program H&S Manager for blank electronic forms

Incident Notification, Reporting, and Management Procedure

Action	Who / When	Under what circumstances	How	Notes
12. Complete these additional forms (typed electronically): *OSHA Recordable Cases* • Incident Investigation Report *First Aid Cases (Doctor's)* • Incident Investigation Report *Chargeable Vehicle Accidents* • Incident Investigation Report *Non-Chargeable Vehicle Accidents* • Incident Investigation Report *Equipment, Property Damage and General Liability Incidents* • Incident Investigation Report *Near Miss* • Incident Investigation Report	Site Supervisor *As soon as possible – no later than 72 hours of incident*	Near Misses as defined by HS020	Email or fax to Program H&S Manager See Incident Notification and Communication Contact List (attached)	Supervisor should have these forms with him/her at all times Contact Program H&S Manager for blank electronic forms
• SharePoint electronic Near Miss Report Email or Fax completed forms to Program H&S Manager	*As soon as possible – no later than 96 hours of incident*	All other Near Misses	Contact Program H&S Manager	Do not include any employee or project identification information – *these reports are anonymous*
13. Perform "Accident Review Board" (ARB) as required by HS020 - Coordinate through Program H&S Manager Perform "Incident Review Board" (IRB) to extract lessons learned - Coordinate through Program H&S Manager	Program H&S Manager *Within 10 days of incident*	OSHA Recordable Cases Chargeable Vehicle Accidents Doctor's First Aid Cases Utility damage or significant property damage		An IRB is outside of procedures

CB&I FEDERAL SERVICES INCIDENT NOTIFICATION AND COMMUNICATION CONTACT LIST

Project Number: 147104 Project/Office Name / Location: RSA / PMC / RSA-227, Redstone Arsenal, Huntsville, AL

Name	Phone Number(s)	Fax Number	E-mail
CB&I Notification Hotline/Helpdesk	866-299-3445 225-215-5056 (Outside Continental US)	N/A	N/A
CORE (Must be notified prior to or during transport to medical treatment center)	877-EHS-CB&I-(877-347-7429)	225.292.8986	
CB&I H&S Manager: Doug Russell	865-560-7918 (office) 865-414-9545 (cell)	865-560-7956	winston.russell@cbifederalservices.com
CB&I PMC Program Manager: Don Burton	256-213-2194 (office) 256-783-6065 (cell)	256-213-2190	don.burton@cbifederalservices.com
CB&IProject Manager: Art Holcomb	256-213-2188(office) 256-783-8478 (cell)	256-213-2190	art.holcomb@cbifederalservices.com
CB&I Army Programs Vice President: Bob Culbertson	865-560-7805 (office) 865-719-3293 (cell)	865-560-7956	bob.culbertson@cbifederalservices.com
CB&I Federal E&D H&S Director – Dave Mummert	419-425-6129 (office) 419-348-1544 (cell)	419-425-6039	david.mummert@cbifederalservices.com
CB&I EHQ&S Director – Matt Hadacek	303-486-2601 (office) 303-908-4587 (cell)	303-741-7703	matthew.hadacek@cbifederalservices.com

Note: Incident reports shall be faxed or emailed <u>only</u> to the Program H&S Manager (or Alternate H&S Manager) for review and proper distribution.

APPENDIX D

CONSTRUCTION QUALITY ASSURANCE PLAN

Construction Quality Assurance Plan
RSA-227, Inactive Washrack Adjacent to Building 5492
Operable Unit 06
U.S. Army Garrison-Redstone
Madison County, Alabama
EPA ID No. AL7 210 020 742

Prepared for:

Mission & Installation Contracting Command
ATTN: MICC Center – FSH
2107 17th Street
Building 4197, Suite 15
Fort Sam Houston, Texas 78234-5015

Prepared by:

CB&I Federal Services LLC
2410 Cherahala Boulevard
Knoxville, Tennessee 37932

Task Order 008
Contract Number W91ZLK-09-D-0006
CB&I Project No. 147104

March 2016

Approval/Signature Page

I have read and approve this Construction Quality Assurance Plan for the Corrective Measures Implementation Work Plan for RSA-227 at Redstone Arsenal, Madison County, Alabama with respect to project hazards, regulatory requirements, and CB&I procedures.

Project Name:	CB&I Project Number
Construction Quality Assurance Plan RSA-227, Redstone Arsenal	147104

Allen Bradley
Cost Account Manager

23-Mar-16
Date

Table of Contents

Page

List of Tables iv
List of Attachments iv
1.0 Introduction 1-1
1.1 Overall Directive 1-1
1.2 Project Background 1-1
1.3 Objectives of the Construction Quality Assurance Program 1-3
1.4 Presentation of the CQAP 1-3
2.0 Responsibility and Authority 2-1
2.1 CQA Organization and Key Elements 2-1
2.1.1 CB&I Cost Account Manager 2-1
2.1.2 Oversight Agency (ADEM) 2-2
2.1.3 CB&I Site QCSM 2-2
2.1.4 CQC Analytical Laboratory 2-2
2.1.5 CB&I and Subcontractors 2-3
2.1.6 CQC Personnel 2-3
2.2 Qualifications 2-3
2.3 CB&I Personnel Training 2-4
2.4 Communication Within the CQA Organization 2-5
2.5 CQA Meetings 2-5
3.0 Contract Scope of Work 3-1
3.1 Proposed Work Activities 3-1
3.2 CQC Requirements and Responsibilities 3-2
3.2.1 Preliminary Activities 3-2
3.2.2 Soil Excavation 3-2
3.2.3 Backfill and Revegetation 3-3
3.2.4 Final Inspection and Demobilization 3-3
3.3 Additional Considerations 3-4
4.0 Document Control 4-1
4.1 Documentation 4-1
4.2 Daily Construction Log 4-2

Table of Contents *(Continued)*

Page

4.3 Records 4-2
4.3.1 Evidence of Contract Compliance 4-2
4.3.2 Storage of Field Records 4-3
4.4 Project Submittals 4-3
4.4.1 Document Submittal Register 4-3
4.4.2 Submittal Preparation and Transmittal 4-3
4.4.3 Resubmittals 4-4
5.0 Nonconformances and Corrective Actions 5-1
5.1 Nonconformance Report 5-1
5.2 Identification of Nonconforming Items 5-1
5.3 Nonconformance Tracking Register 5-1
5.4 Control and Segregation 5-2
5.5 Disposition 5-2
5.6 Documentation 5-2
5.7 Corrective Actions 5-2
5.8 Stop Work Notice 5-2
5.9 Conflict Resolution 5-3
6.0 Procurement Control 6-1
6.1 Introduction 6-1
6.1.1 Review of Procurement Documents 6-2
6.1.2 Source Evaluation and Selection 6-2
6.1.3 Acceptance of Services 6-2
6.1.4 Receipt Inspection and Verification 6-3
6.1.5 Handling, Storage, Packaging, and Shipping 6-3
6.2 Subcontractor Quality Control 6-3
6.3 Analytical Laboratory Services 6-4
6.3.1 Other Subcontractors 6-4
6.3.2 Subcontractor Noncompliance 6-4
7.0 Audits 7-1
7.1 Scheduling and Planning 7-1
7.2 Internal Performance Audits 7-1

Table of Contents *(Continued)*

Page

7.3 Execution of Audits 7-2
7.3.1 Pre-Audit Meeting 7-2
7.3.2 Audit 7-2
7.3.3 Exit Meeting 7-2
7.3.4 Audit Report 7-3
7.4 Response 7-3
7.5 Follow-Up 7-4
7.6 Documentation 7-4
8.0 Construction Inspections 8-1
8.1 Preparatory Inspections and Meetings 8-1
8.2 Initial Inspections 8-2
8.3 Follow-Up Inspections 8-2
8.4 Pre-Final Inspection 8-3
8.5 Final Inspection 8-3
8.6 Inspection Documentation 8-3
9.0 Analytical Testing 9-1
10.0 References 10-1
Tables-
Attachments

List of Tables

Table	Title
4-1	Typical Daily Construction Log
5-1	Nonconformance Report
5-2	Nonconformance Report Tracking Register
5-3	Stop Work Notice
5-4	Stop Work Notice Log

List of Attachments

Attachment	Title
1	Field Inspection Checklist

1.0 Introduction

This construction quality assurance plan (CQAP) presents the overall program for construction quality assurance to be implemented during corrective measures implementation (CMI) activities at RSA-227. This document establishes a program to comply with requirements established in the CMI work plan and those of the Alabama Department of Environmental Management (ADEM) and U.S. Environmental Protection Agency. The scope of work for the project is detailed in the CMI work plan for RSA-227 to which this CQAP is an appendix.

1.1 Overall Directive

The procedures and practices set forth in the CQAP should be adhered to and specifically applied to all quality-related work on the project. It is the responsibility of all personnel performing work on the project to be familiar with and implement the technical requirements referenced in this CQAP or otherwise specified for the project, as included in the CMI work plan.

Conformance to the requirements of this CQAP will provide results which will verify that the contract, when completed, will conform to the specified requirements and be documented by defensible evidence that the work performed meets or exceeds the standards set forth for the project.

1.2 Project Background

RSA-227 occupies approximately 0.04 acre in the central portion of Redstone Arsenal, north of Mills Road in the maintenance shop complex, adjacent to Building 5492. The site lies above groundwater unit RSA-147, which covers approximately 1,300 acres in the central portion of RSA.

RSA-227 consists of the inactive former washrack and sump on the south side of Building 5492 in a developed and paved area. RSA-227 also consists of maintained grass and gravel areas. A partial chain-link fence is located south of the sump within the site boundary. Site drainage is controlled by an unlined drainage ditch to the south of RSA-227. This drainage ditch collects runoff from the northwest of RSA-227 and the east of RSA-227 and directs the combined flow to another drainage ditch that extends south of RSA-227. The drainage ditch located outside the boundary of RSA-227 will be referred to as the Ditch in this plan. The nearest solid waste management unit (SWMU) is RSA-304, Oil/Water Separator, Washrack and Sump, adjacent to Building 5498, located immediately west-northwest.

Topography across the site is flat, sloping to the southwest. No perennial water features are associated with the site, and site drainage is controlled by an unlined drainage ditch to the south

of the site. This drainage ditch collects runoff from the northwest and east of RSA-227 and directs the combined flow to another drainage ditch that extends south of RSA-227 (the Ditch). The entire site lies outside the 100-year floodplain.

The subsurface geologic setting beneath RSA-227 and adjacent sites includes overburden consisting of low- to medium-permeability, dark residual brown, red, reddish-brown, yellowish-red, strong brown clay with fine sands. Intervals of rock and chert and limestone fragments increasing with depth represent residual deposits formed by in situ chemical weathering of chert nodules and layers within the limestone bedrock. Based on information recorded on boring logs, the thickness of the residual soil (overburden) ranges from approximately 45 to 56 feet and the overburden groundwater ranges from 18 to 39 feet below ground surface.

The RSA-227 Resource Conservation and Recovery Act facility investigation (RFI) (CB&I Federal Services LLC [CB&I], 2015) defined the nature and extent of contamination and evaluated potential risks to current and future receptors. During the Alabama Risk-Based Corrective Action Risk Management 2 evaluation, arsenic and polynuclear aromatic hydrocarbons (PAHs) in soil were identified as contaminants of concern (COC) warranting further action because they pose an unacceptable health threat to commercial workers and hypothetical future residents. The screening-level ecological risk assessment concluded that constituents in surface soil or the Ditch pose no unacceptable hazard to ecological receptors. Corrective measures are therefore needed to address arsenic and PAHs in soil and the Ditch at RSA-227 before the site can be released for unrestricted use.

The Army has elected to perform corrective measures to remove and dispose of arsenic- and PAH-contaminated soils at RSA-227. The Army intends to achieve unrestricted use of surface media at RSA-227 through implementation of corrective measures.

Groundwater beneath the site (including the saturated zone soils) is included in the RSA-147 groundwater unit. As discussed in the CMI work plan, three volatile organic compounds (1,1-dichloroethene, 1,1,2,2,-tetrachloroethane, and trichloroethene) and two semivolatile compounds (benzo[a]anthracene and dibenz[a,h]anthracene) in groundwater under the sites will be addressed by the RSA-147 groundwater unit corrective measures. Potable use of groundwater is currently precluded because of RSA’s site access control (SAC) program and nonpotable uses of groundwater are managed under the SAC program (U.S. Army Garrison-Redstone [Army], 2012) and because of the terms of the interim record of decision for installation-wide groundwater (Shaw Environmental, Inc. [Shaw], 2007).

1.3 Objectives of the Construction Quality Assurance Program

The objectives of the construction quality assurance (CQA) program are to provide a system of procedures, practices, guidelines, and controls which, when implemented, will provide the confidence that project activities are accomplished in accordance with the specified contracts, design criteria, plans, drawings, and CMI plan developed during implementation of the corrective measures. This CQAP establishes requirements for developing the overall site-specific construction quality control (CQC) system to be implemented at RSA-227. The CQAP will be implemented during all phases of the project, including preliminary site activities, corrective measures, and close-out activities.

CB&I has been contracted by RSA to perform a CMI for RSA-227. The Army will observe the work during its performance by CB&I and approve the work upon acceptable completion.

The CQAP is also applicable to off-site suppliers of equipment or services to the project that could affect the quality of the CMI. In particular, the following items must be adhered to during the CQA activities:

- Guidelines and requirements prepared and documented in the CMI work plan
- Verification of construction as it is performed, by inspection and verification testing, so that the design features are implemented as intended
- Evaluation of variance to the design that may occur during construction and corrective measures and its effect upon system performance
- Complete documentation prepared and maintained during and after construction and corrective measures so that it can be demonstrated that the design has been implemented and that the performance requirements have been met.

1.4 Presentation of the CQAP

This CQAP is designed so that the CQC activities for all portions of the corrective measures are executed and managed from a common set of quality objectives and practices as described in the construction quality control plan and the installation-wide quality assurance program plan (QAPP) (Shaw, 2013). The CQA and CQC activities, as described herein, serve as the minimum requirements to verify that all work is in compliance with the quality requirements set forth in the CMI work plan and consistent with the local, state, federal, and other appropriate regulatory agencies for the types of environmental activities performed.

2.0 Responsibility and Authority

CB&I will perform the CMI for RSA-227. RSA will observe the work as it is performed to ensure compliance with the CMI work plan. Observation by ADEM personnel will be contingent on the phase of the work being performed.

It is the responsibility of all project personnel to report activities that could adversely affect the CQC requirements set forth by the contract documents. The dedicated CB&I Quality Control Site Manager (QCSM) is specifically responsible for identifying, reporting, and documenting activities affecting quality and for verifying correction of materials and activities that do not conform to the specified contract requirements. The Site QCSM will maintain a close working relationship with the Project Manager (PM) and RSA, keeping them advised of all situations which, if not corrected or controlled, could affect the quality of the project.

CB&I will designate a CQSM to be responsible for CQA. RSA will ultimately be responsible for providing the relevant documentation to the oversight agency (ADEM). CB&I will be responsible for furnishing appropriate documentation (outlined in this CQAP) to RSA for submittal to the oversight agencies, as required.

2.1 CQA Organization and Key Elements

CB&I's Cost Account Manager (CAM) will be responsible to ensure the execution of the CQA duties for RSA-227, which will be performed by the Site QCSM. RSA has retained the services of CB&I to perform the required CMI at the site. CB&I, including its subcontractors, will be responsible for field activities and laboratory testing requirements for the project CQC. The responsibilities of key personnel involved in the CQA and CQC activities are described in Sections 2.1.1 through 2.1.6.

2.1.1 CB&I Cost Account Manager

The CAM has the overall responsibility to ensure the execution of the work to be performed by CB&I, including efforts to ensure compliance with the requirements of ADEM. Among other duties, the CAM will coordinate all financial and project-required resources (technical as well as administrative) necessary for the implementation of the project. The CAM will maintain overall responsibility of the project through coordination with CB&I, ADEM, and the Army.

The CAM shall verify that the corrective measures have been implemented in accordance with the CMI work plan. The CAM has the authority to select and dismiss organizations charged with implementation of the corrective measures and is vested with the authority to stop work if conditions adverse to quality are persistent and need to be corrected before proceeding further.

2.1.2 Oversight Agency (ADEM)

The primary oversight agency for the RSA-227 CMI is ADEM. The oversight agency will provide review and comment on the CQAP to ensure that the proposed CQA program will provide for sufficient confirmation that work is being performed as intended. The oversight agency has the responsibility to review CQA documentation during and upon completion of the corrective measures to confirm that the CQAP has been followed and that the construction/remediation has been performed in accordance with the regulatory requirements.

2.1.3 CB&I Site QCSM

The CB&I Site QCSM will be responsible for the review and approval of the equipment and materials supplied by CB&I (including its subcontractors). The Site QCSM reports directly to CB&I's RSA Program Management Contract Quality Assurance (QA)/Quality Control (QC) Manager. The work that the Site QCSM produces is subject to the review and approval of the CAM, the Project QA/QC Manager, and the Project Engineer.

Deviations from the CMI work plan are not uncommon during the implementation of corrective measures. Activities may need to be adjusted accordingly during the progress of construction and remediation. The Site QCSM may be requested to change some aspects of the design and/or CMI work plan if unexpected conditions (e.g., a change in site conditions, unanticipated logistical problems, change in construction/remediation methodology, or lack of availability of certain materials) are encountered during the construction work. Accordingly, the Site QCSM will be responsible for preparing the appropriate revisions and providing necessary feedback to the CAM or Project QA/QC Manager.

The Site QCSM is responsible for coordinating all required field activities and laboratory CQC testing activities, including sample collection and shipment and verification of the test results. The results will be documented on the daily construction log. Additional responsibilities include preparing addenda to CQAP and formulating corrective actions when variance or nonconformance is detected or required.

2.1.4 CQC Analytical Laboratory

In accordance with the contract documents, CQC activities will be performed by a subcontracted laboratory for confirmation analysis with the soil excavation. The testing laboratory must have its own internal QC procedures to ensure that laboratory analyses conform to the appropriate regulatory requirements and applicable testing standards. The CQC laboratory is responsible for ensuring that analyses are performed in accordance with applicable test methods and standards for following internal QC procedures, for maintaining sample chain-of-custody records, and for reporting data. In addition, the CQC laboratory must be willing to allow announced or

unannounced inspections by authorized project personnel, including representatives from RSA and ADEM, in order to observe the sample preparation and analysis procedures. The laboratory must be willing to accommodate such inspection as long as the observer does not interfere with the testing process.

2.1.5 CB&I and Subcontractors

CB&I has the overall responsibility for conducting the corrective measures in accordance with the approved CMI work plan. CB&I, including its subcontractors, must perform CQC tests as required by the CMI work plan during project corrective measures activities, provide CQC documentation specified, and report variances and nonconformances as outlined in this CQAP.

2.1.6 CQC Personnel

Field QA/QC personnel are individuals designated by CB&I and its subcontractors to ensure that products and services are provided to RSA in accordance with the CMI work plan.

2.2 Qualifications

Construction QA and QC activities will be accomplished by appropriately qualified personnel. Each individual shall understand and enforce the specified quality requirements and recommend improvements in processes and/or services which, when implemented, could affect the cost, schedule, and quality of the project in a positive manner.

The key personnel involved in the CQA/CQC program and their minimum recommended qualifications are provided in the following table:

Key Personnel in CQA/CQC Organization	Role/Minimum Qualifications Requirements
CB&I CAM *Allen Bradley*	The specific individual(s) to certify that the construction activities have been completed in accordance with project design CMI plan.
CB&I Project Engineer *Martha Adams*	The individual who prepared the CMI work plan and designated representative of CB&I with knowledge of the design and contract requirements.
QA/QC Manager *David Marcum*	Independent supervisor of CB&I site QA/QC technicians. Twenty years of QA/QC project work.
Site Manager *TBD*	The individual implementing the CMI work plan. U.S. Army Corp of Engineers CQA trained.
Site QCSM *Brian Rhodes*	Responsible for the review and approval of the equipment and materials and coordinating all required field and laboratory CQC testing activities, including record keeping, sample collection, and shipment. Five years project work; prefer college degree in science or technical field.
CB&I Field QA/QC Personnel *TBD*	Designated CB&I and/or subcontractor personnel (or independent third parties) to perform specific CQC testing. No training required other than in-the-field training for assigned tasks.

2.3 CB&I Personnel Training

Personnel assigned to the project, including subcontractors, are trained to ensure competence commensurate with the responsibility and qualifications necessary to perform the tasks to which they are assigned. In addition to education and experience, job-specific training may be required to qualify individuals to perform certain activities. The CB&I CAM and Site QCSM will review and document the personnel qualifications and training to verify compliance to the subcontract requirements.

All personnel will be trained in accordance with Occupational Safety and Health Administration Section 1910.120. Project personnel will receive an orientation to the CMI work plan as appropriate to their responsibilities before participation in project activities.

The CB&I CAM and Site QCSM will review the qualifications and training of all personnel assigned to the project. Training and qualification records will be maintained at the project site and available for review. Training of site personnel will be verified and documented as applicable to the work to be performed. The Site QCSM will monitor the training activities to verify all required training is completed for personnel performing work on the project and verify that the training is documented and current records are maintained.

Training will include all phases of the work as necessary and will be commensurate with the complexity of the activities being performed. Training methods may include formal classroom, required reading, on-the-job training, or combination of these methods. Training procedures will be reviewed and approved by qualified CB&I project personnel.

Training programs are conducted according to organizational needs and policies so that personnel have the following:

- An acceptable understanding of the safety consideration of the work tasks
- Knowledge of the processes adequate to perform assigned tasks
- A working knowledge of the project or facility basis requirements
- An understanding of systems, terminology, reasons for performance of specific control functions, and the acceptance and rejection criteria for the work
- Knowledge of the consequences of inadequate quality attainment.

The training program will be evaluated to determine the effectiveness of the program and instruction. If the program content, instructor capabilities, or other conditions require changes,

the program will be updated at that time. At a minimum, the training will be reviewed as part of the management assessment.

CB&I maintains qualification and training records for each employee. Training records should include all documents that establish the employee's capabilities, including outside training and training performed by approved training organizations. The Site QCSM will verify compliance with the project requirements.

2.4 Communication Within the CQA Organization

Communication between the CQA program participants includes the exchange of information which allows work to proceed and the required reporting so that activities can be reviewed. Communication in the form of construction documents, inspection reports, audit reports, verification test results, and daily construction logs must be timely so that reviews and evaluations can be performed by all the parties responsible for execution of the work.

CQA personnel, the CAM, and CB&I and its subcontractors must communicate as required and as addressed in this CQAP to maximize the efficiency and effectiveness of the CMI and to minimize variance or nonconformance.

2.5 CQA Meetings

CQA meetings will be held throughout the progression of construction/corrective measures activities on an as-needed basis. Progress meetings will be documented in the form of meeting minutes prepared by the Site QCSM and maintained in the on-site CQA files.

3.0 Contract Scope of Work

The complete and detailed scope of work for the planned construction/corrective measures activities is presented in the CMI work plan and its supporting documents. Additionally, the CMI work plan provides the proposed schedule and sequencing of the activities. This chapter provides a general overview of the activities and an outline of the CQC testing requirements referenced in the CMI work plan. Chapters 4.0 through 9.0 present the necessary supporting aspects of the CQC/CQA program that must be implemented to ensure that the overall objectives of the program are met and provide evidence of compliance with all applicable project and regulatory requirements.

3.1 Proposed Work Activities

The general scope of work for RSA-227 includes the following:

- Procurement and subcontracting

- Preliminary site activities, including:
  - Mobilization
  - Utility clearance and marking
  - Construction of erosion controls
  - Well closure
  - Surveying and marking of proposed excavation and stockpile areas

- Washrack/sump removal and soil excavation
- Removal of the sump contents (liquid and sediment)
- Removal of the concrete washrack/sump and disposal of concrete and debris
- Excavation of contaminated soil, including:
  - Confirmation sampling and analysis of the excavated area

- Waste management, including:
  - Characterization sampling
  - Transport and disposal of arsenic-contaminated soils as nonhazardous waste at a Subtitle D landfill

- Site restoration and demobilization, including:
  - Confirmation sampling of backfill
  - Application of backfill and topsoil and revegetation with approved grass mixtures
  - Equipment decontamination
  - Removal of erosion control
  - Demobilization.

3.2 CQC Requirements and Responsibilities

Sections 3.2.1 through 3.2.4 summarize the CQC testing requirements and responsibilities of the CB&I Site QCSM during implementation of corrective measures at RSA-227. The information presented herein is intended only to provide an overview of the requirements; complete details of the planned work are contained in the CMI work plan and supporting documents.

3.2.1 Preliminary Activities

Preliminary activities include mobilization, requirements for base access, digging permits and utility marking, site control, surveying, well closure, and protection of existing site features. Additional activities include removal and disposal of the sump contents (liquid and sediment) followed by removal of the concrete washrack and sump for off-site disposal.

The digging permit will be obtained from the Directorate of Public Works prior to commencement of the CMI. During these activities, the Site QCSM will be responsible for reviewing purchase orders and packing slips to ensure all materials received are in accordance with the CMI specifications. Storm water erosion and sediment controls will be implemented in compliance with the *Alabama Handbook for Erosion Control, Sediment Control, and Stormwater Management on Construction Sites and Urban Areas* (Alabama Soil and Water Conservation Committee [ASWCC], 2014). Site controls will be enforced in accordance with the site-specific safety and health plan (RSA-227 CMI work plan Appendix C). A licensed land surveyor will be subcontracted to delineate the project work boundary and mark the excavation areas. No monitoring wells are located within the excavation area; consequently, no well closure is anticipated. Any well closure will be performed in accordance with Standard Operating Project Procedure No. 21, *Monitoring Well and Borehole Abandonment* (Shaw, 2013).

3.2.2 Soil Excavation

Soil will be excavated to meet the cleanup goals specified in the CMI work plan. Excavation will be accomplished according to the Safety and Health Regulations for Excavations (Occupational Safety and Health Administration 29 Code of Federal Regulations Part 1926 Subpart P). A licensed land surveyor will be contracted to survey the final excavation limits at the site. Surveying will be conducted in accordance with the Alabama Society of Professional Land Surveyors Standards of Practice for Surveying in Alabama (www.asps.org). Soil confirmation samples will be collected as discussed in Appendix E of the RSA-227 CMI work plan.

Contaminated soils will be stockpiled during the excavation at RSA-227. Based on site knowledge and data from similar sites, it is expected that the excavated soils will be managed as nonhazardous special waste and that the soil can likely be disposed as special waste (nonhazardous) at a Subtitle D landfill. CB&I will use a licensed transportation and disposal

subcontractor to complete these activities. The waste characterization results will be submitted to ADEM for approval, and an ADEM waste certification number will be obtained prior to disposal of the excavated soils.

3.2.3 Backfill and Revegetation

Clean soil for the fill material will be laboratory tested prior to placement. Approximately 160 cubic yards of fill material will be needed from an approved borrow area. If sampling of the on-site borrow source material has not been conducted, CB&I will sample the material to confirm it is acceptable for use as backfill at the site. The borrow material sampling, if required, will include one 5-point composite sample analyzed for target compound list (TCL) semivolatile organic compounds, TCL pesticides/polychlorinated biphenyls, and target analyte list metals and one sample analyzed for TCL volatile organic compounds (RSA-227 CMI work plan Appendix E). The backfill material will be placed by the excavator, spread in maximum 12-inch loose lifts, and compacted using the excavator. Any uncontaminated soil removed during excavation activities will also be placed in the excavation. Once the areas have been backfilled and compacted, clean topsoil will be placed over the affected areas.

Soil excavation will disturb or destroy site vegetation. Any vegetated areas that are disturbed or destroyed will be restored following completion of the corrective measures and removal of all equipment. Restoration will include reseeding and mulching the area. The ASWCC should be consulted to determine the grass species to use. The Site QCSM will be responsible for verifying the proper fill and revegetation materials are used.

3.2.4 Final Inspection and Demobilization

When planned corrective measures activities have been completed, temporary field structures (e.g., fencing) will be removed and disposed off site. A final inspection of the project site will then be conducted in accordance with the requirements outlined in this CQAP.

After the completed work has been accepted by RSA, all personnel and equipment will be demobilized from the project site. During these activities, the Site QCSM will be responsible for the performance or oversight of the following:

- Oversee the removal of temporary field structures.
- Obtain required waste characterization samples as necessary for off-site disposal.
- Coordinate disposal with RSA personnel (including obtaining appropriate RSA signatures on waste manifests or bills of lading) and the subcontracted transportation and disposal vendor.

- Participate in final field inspection and note deficiencies that require corrective action.
- Coordinate implementation of corrective actions and arrange for reinspection.
- Submit final approved inspection report to RSA.
- Oversee demobilization activities.

3.3 Additional Considerations

The information contained in this chapter only represents an overview of the proposed work activities and is intended to serve as a guide to the complete details of work as included in the contract CMI work plan and other supporting documents (i.e., data collection QA plan, etc.). As noted previously, the remaining chapters of this CQAP contain discussions of the additional components included in the overall CQA/CQC program which are implemented to ensure the generation of defensible evidence of compliance with contract and regulatory requirements.

4.0 Document Control

The CQAP is a controlled document, and measures are included to maintain the currency and the use of the plan so that the CQC functions defined within are in accordance with the latest specified requirements. Distribution of the plan is controlled so that all revisions to the plan are issued to the plan holders and the superseded requirements revised accordingly in the existing plans.

Issuance and distribution of the plan will be controlled by the CB&I CAM or his/her designee, the document controller. The plan will be transmitted to each plan holder on the distribution list. The transmittal document will reference the assigned document control number, which will appear in the top right corner of the transmittal letter included in each document. The assigned number will be kept on a log and maintained by the CB&I CAM's designee in the home office in Knoxville, Tennessee. Copies will be maintained at specific locations and available to the individuals performing the work.

Revisions to the plan will be made by sections or by the addition of supplements or amendments and the revisions noted with change pages or with a new final or revised document. All accepted revisions to the plan will be transmitted to the plan holders according to the distribution list. Individuals or organizations designated as plan holders will be responsible for updating their copies of the plan.

4.1 Documentation

CB&I's CAM will provide a document control system to provide measures for the control of issuance, distribution, storage, and maintenance of documents relating to quality, including those from CB&I and its subcontractors and other vendors or suppliers.

Preparation, review, issuance, and revisions to documents affecting construction quality will be controlled so that the specified contract, regulatory, and permitting requirements are clearly defined and made available to the personnel performing the work. Such documents may include but not be limited to the following:

- Correspondence
- Drawings
- Procedures
- Plans
- Reports
- CMI work plan.

The CB&I CAM or his/her designee will review the documents to verify inclusion of the appropriate QA requirements.

4.2 Daily Construction Log

CQC reporting will be addressed in the daily construction log, and CB&I will document all project activities as required by the contract. The log will cover both conforming and nonconforming work and will include but not be limited to the following:

- Weather conditions
- Site instructions
- Nonconforming conditions
- Results of inspections and tests
- Types of defects/causes for rejection
- Corrective actions proposed and taken
- On-site personnel/major equipment log
- Delays and causes
- Verbal instructions.

A copy of a typical daily construction log is included as Table 4-1. RSA will be provided a weekly submittal of daily construction logs throughout the duration of the project.

4.3 Records

4.3.1 Evidence of Contract Compliance

Records will be prepared to furnish documented evidence that design, construction, and operation activities, including laboratory analysis, are in compliance with the quality requirements of the contract. The records will be consistent with the applicable sections of the project technical CMI work plan and may include one or more of the following:

- Daily construction logs
- Technical reviews
- Inspection and test reports
- Audit reports
- Monitoring and surveillance activities
- Personnel qualifications
- As-built drawings
- Nonconformance reports (NCR)/corrective actions
- Design documents
- Laboratory analysis reports
- Other specified documents.

4.3.2 Storage of Field Records

Copies of field records will be maintained and stored at the project site until turnover as specified by RSA. On-site records will be readily retrievable for review and audit purposes by ADEM and RSA. The records will be controlled so that the possibility of loss, damage, or other detrimental conditions of the records is avoided. The original project documents will be stored at CB&I's home office in Knoxville, Tennessee.

4.4 Project Submittals

Project submittals include documents generated or revised in the home office in Knoxville, Tennessee, or in the field site office at RSA. Project submittals will have tracking numbers issued with each new or revised document. In addition, project submittals specified in the contract documents and CMI work plan will be prepared by CB&I and submitted to the Site QCSM. CB&I's CAM is responsible for the preparation and maintenance of the specified submittals for the project.

A master set of as built-drawings will be kept at CB&I's field office and marked periodically with variances from the contract documents. Two sets of as-built drawings (redline drawings) will be maintained at the site. Each deviation will be identified with the appropriate modifying documentation. These as-built drawings include buried or concealed structures and utility features revealed during the course of the site work. A copy of the marked set of prints and updated design drawings, if required, will be submitted.

4.4.1 Document Submittal Register

The project submittal register will be maintained in the home office in Knoxville, Tennessee. Any submittals returned unapproved or with comments requiring revisions will be so noted on the submittal register and re-entered as a revision. CB&I's Project Engineer or designee will monitor the submittal register to verify submittals are being controlled, scheduled, and tracked and the status kept in an effective manner. The project submittal register will be updated continuously, as applicable, and reviewed by the Project Engineer or his/her designee to determine the status of the submittals and compliance with the project schedule requirements.

4.4.2 Submittal Preparation and Transmittal

Submittals will be prepared by CB&I's CAM or his/her designee. Submittals from subcontractors or vendors will be reviewed by CB&I's Site QCSM prior to transmitting the submittals to the PM and Project Engineer or designees. All appropriate information will be completed prior to transmittal of the submittals. Submittals will be scheduled to coincide with the needed dates and adequate time allowed for review and approval in accordance with the contract requirements. The submittals will be reviewed for conformance to specified

requirements, completeness, and accuracy. Submittals requiring modifications or changes will be returned to CB&I's CAM or his/her designee for corrective actions and resubmitted for review.

4.4.3 Resubmittals

Submittals which are not approved by the Site QCSM or returned with comments which require resubmittal for approval will be processed in the same manner as the original submittals. The submittal number used for the original submittal will be used for each resubmittal followed by a numerical notation indicating the revision. The resubmittals will be re-entered on the project submittal register with the new revision number.

5.0 Nonconformances and Corrective Actions

This chapter addresses the procedure for reporting nonconformances and corrective action for variance from the contract documents.

5.1 Nonconformance Report

Work, field testing, laboratory testing, or materials not conforming to the CMI work plan or contract requirements, including noncompliances and deficiencies identified by RSA, will be documented on an NCR. A sample NCR is included as Table 5-1. At a minimum, the NCR will detail the nonconforming conditions, recommended corrective action(s), and disposition of the corrective action(s). CB&I will immediately correct noncompliances or deficiencies identified by the Site QCSM. A master log of all NCRs will be kept by the Site QCSM for review by the PM. All NCRs will remain open until the nonconforming condition has been satisfactorily resolved and verified as acceptable by the QA/QC Director.

5.2 Identification of Nonconforming Items

Items identified as nonconforming will be documented on the NCR, which, as applicable, will include the following:

- Description of nonconforming item or activity
- Detailed description of nonconformance
- Cause of nonconformance
- Referenced criteria
- Recommended disposition
- Disposition and verification of corrective action
- Responsible organization.

5.3 Nonconformance Tracking Register

Each identified nonconformance will be documented on the sample NCR Tracking Register (Table 5-2), which, at a minimum, will include the following information:

- NCR tracking number
- Issue date
- Description of nonconformance
- Date closed.

The Site QCSM is responsible for maintaining the NCR Tracking Register and verifying that the corrective actions were implemented and verified prior to closing the NCR. RSA will be notified in advance of verification of the corrective actions to permit their participation in the inspections and acceptance of the results prior to closing the NCR.

5.4 Control and Segregation

Nonconforming materials or items will be controlled to prevent inadvertent use or further processing which would cause the nonconforming condition to be inaccessible for correction. All items identified as nonconforming will be clearly identified and segregated from acceptable items except where size, installation status, and other conditions would make it impractical to segregate from conforming items. When nonconforming items are not segregated, they will be identified and clearly marked so that they may be easily recognized as nonconforming to prevent further activities prior to the implementation of the corrective action(s).

5.5 Disposition

The disposition of NCRs will include the necessary actions required to bring the nonconforming condition to an acceptable condition and may include reworking, replacing, retesting, or re-inspecting. Implementation of the disposition will be in accordance with the original procedural requirements, a specific procedure, or other acceptable written instructions by the QA/QC Director.

5.6 Documentation

Notifications of noncompliance and the proposed corrective actions will be documented on an NCR and processed in accordance with the provision described in this chapter. Corrective actions will be implemented upon receipt of the notification. The NCR will remain open until the noncompliance is resolved.

5.7 Corrective Actions

In addition to resolving identified nonconforming conditions, corrective actions will address the cause of adverse conditions contributing to the nonconformance and establish methods and controls to preclude the recurrence of the same or similar types of nonconformances.

The Site QCSM will track corrective actions to identify trends in the causes of the nonconforming conditions and initiate necessary actions to prevent recurrence. Additionally, the Site QCSM will monitor the corrective actions to verify that corrective actions were properly implemented and accepted and the NCR closed out.

5.8 Stop Work Notice

Nonconforming conditions which affect the quality of the project, threaten safety, or cause an environmental threat will be stopped through the use of a Stop Work Notice (Table 5-3). Stop Work Notices may also be issued in the event of insufficient corrective actions resulting in recurring nonconforming work. The issuance and tracking of Stop Work Notices will be

documented on a Stop Work Notice Log (Table 5-4) maintained by the CB&I CAM (or his/her designee).

5.9 Conflict Resolution

Conflicts arising from nonconformance and corrective actions which cannot be resolved at the project management and QC levels will be directed to successive levels of management as necessary to obtain resolution. The levels of management will include the Site QCSM, QA/QC Director, and CAM. All conflicts will be resolved within the specified requirements of the contract and the governing regulatory documents.

6.0 Procurement Control

This chapter addresses the procedure for ensuring that procured items and services meet established requirements and perform as specified within procurement standard operating procedures.

6.1 Introduction

Prospective suppliers will be evaluated and selected on the basis of the specified criteria. CB&I will ensure that approved suppliers can provide acceptable items and services as required by the contract. The Project Engineer will review and approve all materials and supplies that may affect quality of the project. Upon approval of purchase requisitions, the Site QCSM will receive a copy of the approved purchase requisition. When materials and supplies arrive at the project site, the Site QCSM will be responsible to ensure the items and services meet the requirements listed in the purchase requisition and that no items are installed prior to approval of applicable submittals.

The procurement details include provisions for the following, as applicable to the scope of work or services:

- ***Scope of Work.*** A statement of the scope of work to be performed by the subcontractor will be in the procurement documents.
- ***Technical Requirements.*** Technical requirements will be specified. Where necessary, these requirements will be specified by reference to CMI work plan, codes, regulations, procedures, QA program documents, and statement of work requirements that describe the services to be furnished. The procurement documents will provide for identification of inspection, verification, and acceptance requirements for monitoring and evaluating the supplier's performance.
- ***Quality Assurance Program Requirements.*** Procurement documents will require that each subcontractor have a documented quality system that implements portions or all of the requirements of this plan, as applicable. The extent of a supplier’s quality system will depend on the type and use of the service being procured.
- ***Right of Access.*** At each tier of procurement, the procurement documents will provide for access to supplier's facilities and records for inspection or audit by CB&I or its authorized representative.
- ***Documentation Requirements.*** Procurement documents at each tier of procurement will identify the documentation required to be submitted to CB&I for information, review, or approval and the time of submittal. The retention times and the disposition requirements for specific quality records will be prescribed.

- ***Questionable or Unusable Data.*** The procurement documents will include requirements for reporting and approving disposition of questionable or unusable data.

6.1.1 Review of Procurement Documents

The Site Supervisor will ensure that site-initiated procurement documents and changes transmitted to the prospective supplier include adequate requirements, performance standards, and quality criteria. The purchase requisition will then go through the proper approval process, including the CB&I CAM, the Project Engineer, and the Procurement Leader.

The review of changes and their effects will be completed prior to transmittal to the prospective supplier. This review will include the considerations that the appropriate requirements are specified, additional or modified performance criteria are determined, and analysis of exceptions or changes requested or specified by the supplier.

6.1.2 Source Evaluation and Selection

The selection of suppliers and subcontractors will be based on an evaluation of their capability to provide items and/or services in accordance with the specified requirements. Measures for evaluating and selecting procurement sources will be documented and may include one or more of the following:

- Evaluation of the supplier's history of providing an identical or similar service, which reflects the current capability
- Supplier's current QA records supported by documented qualitative and quantitative information that can be objectively evaluated
- Supplier's technical and quality capability as determined by a direct evaluation of its facilities and personnel, an evaluation of the effectiveness of the implementation of its quality system, and, in the case of subcontracted analytical data acquisition services, the successful analysis of a set of performance evaluation samples
- Approval of submittals pertaining to the items or services to be provided prior to use or initiation of the work on the project site.

6.1.3 Acceptance of Services

The procurement control will include flow-down provisions of the contract and site-specified task order. The acceptance methods used (e.g., source verification, receipt inspection, or technical verification of data produced) will be verified. Confirmation of specific characteristics will be performed at intervals and to a depth consistent with the service's complexity, quantity and frequency of procurement, and statement of work requirements.

6.1.4 Receipt Inspection and Verification

The Site QCSM or designee will develop and implement procedures for receipt inspection and verification of purchased items. These controls will provide for the following, as applicable:

- Verification that the items received are in accordance with purchase order requirements
- Inspection for evidence of breakage, damage, or other unfitness for use
- Verification that required documentation is received and acceptable
- Verification that the items conform to the supplier's published requirements that were provided, submitted, and approved.

6.1.5 Handling, Storage, Packaging, and Shipping

The handling, storage, cleaning, preservation, packaging, and shipping of items shall be controlled to prevent damage or deterioration that would jeopardize the specified performance of the items.

Procurement documents shall include the following:

- Requirements for sellers to establish special procedures, when necessary, to ensure cleanliness, identification, and proper handling
- Requirements for the preparation of items for shipment, as necessary, to prevent damage or deterioration of the supplied items
- Requirements for material and equipment storage instructions, when specified, to be available at the site well in advance of the arrival of material/equipment.

6.2 Subcontractor Quality Control

All subcontractors performing work for a project are responsible for compliance with the requirements of their respective subcontract. Subcontractors include organizations supplying quality-related items or services to the project. The overall responsibility for conformance to the quality requirements for the subcontracted items and services is retained by CB&I.

The requirements for personnel qualifications, technical performance levels, QC procedures, acceptability levels, and documentation will be included as part of the subcontract documents. The PM or designee will review the subcontract procurement documents to verify that QC requirements are passed on to the subcontractor.

The Site QCSM is responsible for the implementation of inspections, surveillance, document review, audits, and other QC activities for monitoring the subcontractor to verify compliance

with the contract and subcontract requirements. These activities will be documented on inspection reports, audit reports, field logs, or other forms appropriate to the function performed.

For field operations, the field QA/QC personnel will provide QC checks before, during, and at the completion of the subcontractor's activities to determine that the subcontractor is in compliance with the QC measures set forth by the contract, the applicable subcontract documents, and the subcontractor's approved QC plan, including the following:

- Meeting quality requirements
- Generating, controlling, and maintaining required documentation
- Performing and documenting required inspections and tests
- Identifying, reporting, and correcting nonconforming conditions
- Turnover to CB&I.

6.3 Analytical Laboratory Services

Analytical testing to ensure that the cleanup objectives are achieved will be performed using analytical laboratories off the project site as specified by the contract documents. The analytical testing requirements and related activities are described in Sections 4.4 and 4.6 of the CMI work plan.

6.3.1 Other Subcontractors

Subcontractors performing work other than laboratory-related activities will be monitored by the Site QCSM or field QA/QC personnel to verify conformance to the contract and subcontract quality requirements. The monitoring activities will include audits, surveillances, witnessing of inspections and tests, document reviews, and interfacing with the subcontractor's QC or project management. All monitoring activities will be documented on the appropriate form or included in the Daily Construction Log.

6.3.2 Subcontractor Noncompliance

Work performed by subcontractors that does not comply with the specified requirements will be identified, reported, controlled, tracked, and corrected.

7.0 Audits

Audits may be performed to verify compliance with aspects of the project documents. Audits will be performed with checklists and include a review of documents and records to determine if the CQAP and supporting procedures are being implemented. A site-specific assessment checklist for RSA-227 is provided as Attachment 1 of this CQAP. The individual elements of the checklist are based on the site-specific requirements presented in Worksheet No. 14 of Appendix E.

An audit will note findings and observations. A finding will be a documented statement of fact concerning a noncompliance or deviation from established requirements. An observation will be a statement of fact regarding the potential for a noncompliance.

Audits will be performed by qualified personnel and include individuals who are technically knowledgeable in the areas to be assessed. Audit results will be documented and sent to the appropriate management.

7.1 Scheduling and Planning

Audits typically will be performed as early in the duration of the activity as practical and continue until completion of the activity. The Auditor will provide written notification informing the organization to be audited informing of the scheduled audit date.

Audit schedules may be prioritized based on the importance of the activity, previously identified deficiencies of the activity, and the size or complexity of the activity. The Site QCSM will develop a schedule for the performance of audits. The audit schedule will be posted and distributed to project staff and managers. Unscheduled audits may be used to supplement scheduled audits when conditions warrant.

7.2 Internal Performance Audits

Performance audits are conducted on site by an auditor who directly observes specific project activities to determine if these activities are being conducted in accordance with the contract requirements. The Auditor will be technically competent in the activities to be audited and independent of the subject work. The audit of project deliverables will be for the purpose of determining compliance with the procedures set forth in this plan (i.e., technical reviews, documentation of reviews, document control, and other procedures). Checklist items to be examined may include the following:

- Availability and implementation of approved work instructions
- Field documentation and checking
- Subcontractor performance
- Review of personnel training and qualification records
- Review of process controls and associated records to determine compliance with CMI work plan or plans
- Review of work areas for evidence of implementation of procedures and instructions
- Review of documentation indicating compliance with plan, document and design preparation, review, and approval procedures
- Change/nonconformance documentation and disposition.

7.3 Execution of Audits

Audits will normally be conducted as described in Sections 7.3.1 through 7.3.4.

7.3.1 Pre-Audit Meeting

The Auditor will conduct a brief pre-audit meeting with management or supervisory personnel of the organization to be audited to confirm the audit scope, discuss the audit sequence, establish a tentative time for the post-audit meeting, and establish channels of communication.

7.3.2 Audit

The Auditor will follow checklists, developed prior to the audit, to evaluate existing project records provided by designated project staff and may observe work in progress. If noncompliances are observed or uncovered during the audit, the Auditor will discuss these potential findings with the individuals being audited so that findings are accurate and understood. In addition to identifying noncompliances, the audit results may include observations of notable areas of strength.

7.3.3 Exit Meeting

Upon completion of the audit, the Auditor will discuss observations and findings with the group or organizations audited and, whenever possible, agree on corrective actions. Minor administrative findings, which can be resolved to the satisfaction of the audit team during the audit, are not required to be documented as items requiring corrective actions. All findings that are not resolved during the course of the audit and findings affecting quality will be noted on the audit checklists.

7.3.4 Audit Report

The Auditor will prepare and issue an audit report, which provides the following information as a minimum:

- Unique audit number
- Description of the audit scope
- Audited organization and location
- Persons contacted during the audit activities
- Audit dates
- Summary of audit results, including a statement on the effectiveness of the quality management elements which were audited
- Suggested opportunities for improvement in the form of observations and comments
- Description of each reported audit finding in sufficient detail to enable corrective action to be performed
- Due date for completion of corrective actions and/or audit response, typically 30 days.

Audit results will include findings and observations. Findings are items which require corrective action. Findings will be documented on an audit finding report or equivalent. Observations are nonmandatory recommendations to improve project quality. The Auditor may make recommendations for corrective actions; however, the ultimate responsibility for taking corrective action lies with the auditee. The report will be signed by the Auditor. Checklists need not be included with the audit report but should be maintained as records in the project central files.

The Auditor will prepare an audit report cover letter or memorandum for signature and issuance by the CB&I PM. The audit report will be issued to the management of the audited organization.

7.4 Response

The response prepared by the auditee will clearly state for each finding the corrective action taken or planned, the cause of the deficiency, and the action to prevent recurrence. For each observation, the response will indicate actions taken or planned for quality improvement. The response will, at a minimum, be sent to the CB&I PM and the Auditor.

7.5 Follow-Up

The Site QCSM or designee will track all audit findings to assure that all findings are appropriately addressed and examine audit findings for significant conditions adverse to quality. The Site QCSM or designee will maintain the status of audit findings for active audits and prepare correspondence relating to overdue audit responses. When responses are overdue, the Site QCSM or designee will notify the responsible organization by telephone that responses are overdue and prepare a memorandum or letter indicating a new response due date. If a request for extension of response is received, an evaluation will be made and a formal response submitted to the requesting organization.

The CB&I CAM or designee, upon receipt of responses to audit findings, will coordinate with the Auditor for the evaluation of responses. The responsible evaluator will document the results of the evaluation. Unacceptable responses will be noted together with the specific reason for rejection. The CB&I CAM or designee will prepare transmittal correspondence to inform the responsible organization of a new response due date.

Follow-up actions, possibly including reaudit of deficient areas, will be taken to verify that corrective action is accomplished as scheduled. The Site QCSM or designee will assure that verifications of corrective action implementation are accomplished and document the results of verification.

Following acceptance and verification of all corrective actions, an audit closure document will be issued by the Auditor to the same distribution list as the audit report. The closure document will indicate that corrective actions have been satisfactorily completed and contain a statement that the audit is closed.

7.6 Documentation

The following documents generated before, during, and after the audit process will be maintained in the record file system in accordance with Chapter 4.0 of this CQAP.

- Audit report
- Audit responses
- Audit closure letter
- Correspondence related to the audit.

8.0 Construction Inspections

The primary function of inspections is to establish the measures required to verify the quality of work performed and compliance to the specified requirements, including the inspection of materials and workmanship before, during, and after each work element.

8.1 Preparatory Inspections and Meetings

Along with representatives of RSA, the PM, the Site QCSM, and the Site Supervisor will conduct preparatory inspections and meetings at RSA-227. Preparatory inspections and meetings will be performed prior to starting definable features of work. Typical definable tasks and related inspection requirements can be modified based on project requirements. Where more than one work element is included in one work activity, one preparatory meeting may cover several work elements for the site. Likewise, a number of work activities, where feasible, can be combined into individual preparatory meetings. The preparatory inspection and meeting will be attended by the Army, applicable CB&I personnel, and subcontractors involved with the feature of work and responsible field QA/QC personnel. The Site QCSM will be notified in advance to coordinate participation in the inspection. The preparatory meeting may include but not be limited to the following:

- Review the basic elements of the work.
- Review documentation and reporting requirements.
- Review pertinent contract requirements.
- Review materials and equipment documentation for required tests, submittals, and approvals.
- Review required QC inspections and test requirements.
- Establish that the preliminary work required to begin the feature of work is complete and conforms to approved drawings and submittal data.
- Establish that the required materials and equipment for commencement of the work are on hand or available for use on the feature of work and that all equipment is properly calibrated and in proper working condition.
- Ensure the securing of utility clearances (digging permits).
- Address basic site health and safety considerations.
- Establish hours of operation.

Preparatory inspections will be reported on the daily construction logs. The detailed results of the preparatory inspection will be documented.

Personnel performing work activities affected by a preparatory inspection will be directed in the acceptable level of the workmanship involved for the feature of work covered by the inspection.

8.2 Initial Inspections

The initial inspection may be conducted at the beginning of the work element. The inspection will be performed as soon as it is determined that a sufficient portion of the work element has been accomplished to evaluate the following criteria:

- Compliance with the CMI work plan, drawings, submittals, and other contract requirements
- Assurance that erosion control devices are being inspected weekly and also within 72 hours of any qualifying precipitation event (any precipitation of 0.75 inch or greater in any 24-hour period)
- Acceptable levels of workmanship
- Quality of materials
- Resolution of differences (when applicable).

Initial inspections will include participation of the responsible personnel, including appropriate subcontractors and the field QA/QC personnel involved with the work element. The Army will be notified in advance of each initial inspection to coordinate participation in the inspection. The initial inspections will be reported on the daily construction logs.

8.3 Follow-Up Inspections

Follow-up inspections will be performed throughout the course of work. The frequency of the follow-up inspections will be contingent upon the extent of work being performed on each particular work element. Follow-up inspections will be performed on all ongoing work. Follow-up inspections will also be performed on each completed work phase prior to starting subsequent phases. Deficiencies identified will be corrected in a timely manner or identified on a punch list which will be used as a tracking method until the work is completed and verified and the punch list item signed off. Deficiencies which would be made inaccessible for correction by subsequent work activities will be corrected and accepted prior to starting the new work.

The follow-up inspections will be reported on the daily construction logs and copies of the inspection forms as applicable.

8.4 Pre-Final Inspection

Near the completion of the work or increment thereof as established (e.g., completion of the erosion control structures such as silt fencing and construction entrance), the CB&I Site QCSM shall conduct an inspection of the work and develop a punch list of items which do not conform to the approved CMI plan. The list of deficiencies will become a part of the CQC documentation, which will include the estimated date by which the deficiencies will be corrected. The CB&I Site QCSM will then make a second inspection to ensure that all deficiencies have been corrected. Once this is completed, CB&I will notify the Site QCSM that the site is ready for Pre-Final Inspection.

The Army will perform the Pre-Final Inspection to verify that the site work has been satisfactorily completed. A pre-final punch list may be developed by the Site QCSM as a result of this inspection. The CB&I Site QCSM will then make sure that all items on this list have been corrected and so notify the PM so that a Final Inspection with RSA can be scheduled. Items noted in the Pre-Final Inspection will be completed in a timely manner. These inspections and deficiency corrections will be accomplished within the time frame slated for completion of the project.

8.5 Final Inspection

The CAM, the Site Supervisor, the Site QCSM, and the Army will be in attendance at this inspection. The RSA Representative will formally schedule the Final Inspection based upon completion of the results of the Pre-Final Inspection. Notice will be given to the Army at least 14 days prior to the Final Inspection and must include CB&I's assurance that all the specific items previously identified as being unacceptable will be completed by the date scheduled for the Final Inspection.

CB&I will prepare the punch list. The punch list will identify all nonconforming or incomplete work. Upon completion of the punch list items, a second inspection will be conducted by RSA and CB&I to verify all of the items conform to the requirements. The QA/QC Director will be the final authority to accept that all of the punch list items have been corrected.

8.6 Inspection Documentation

The Site QCSM is responsible for the maintenance of the inspection records. Inspection records will be legible and clearly provide all information necessary to verify the items or activities inspected conform to the specified requirements or, in the case of nonconforming conditions, provide evidence that the conditions were brought into conformance or otherwise accepted by the Army.

9.0 Analytical Testing

The Army's installation-wide QAPP (Shaw, 2013) establishes the measures for management and control of analytical testing activities affecting the quality of corrective measures. Primary responsibility for control of construction (through performance of analytical QC testing) resides with CB&I (including its subcontractors) and shall be done in accordance with the CMI work plan.

Task-specific programs of field controls, consisting of inspections and verification tests, will be utilized to verify that the CMI work plan is adhered to during implementation of the corrective measures, where applicable. However, the installation-wide QAPP presents the overall general principles that are employed in any chemical analysis performed as part of the construction. Detailed analytical testing requirements for the RSA-227 CMI are provided in site-specific Uniform Federal Policy worksheets (RSA-227 CMI work plan Appendix E).

10.0 References

Alabama Soil and Water Conservation Committee (ASWCC), 2014, ***Alabama Handbook for Erosion Control, Sediment Control, and Stormwater Management of Construction Sites and Urban Areas***, September.

CB&I Federal Services LLC (CB&I), 2015, ***Revision 1, RCRA Facility Investigation Report, RSA-227, Inactive Washrack Adjacent to Building 5492, Operable Unit 6, U.S. Army Garrison-Redstone, Madison County, Alabama***, August.

Shaw Environmental & Infrastructure, Inc. (Shaw), 2013, ***Final Rev. 1, Installation-Wide Quality Assurance Program Plan for the Program Management Contract, Volume I and Volume II , U.S. Army Garrison-Redstone, Madison County, Alabama***, June.

Shaw Environmental, Inc. (Shaw), 2007, ***Final Interim Record of Decision, Interim Remedial Action for Installation-Wide Groundwater, Redstone Arsenal, Madison County, Alabama,*** prepared for the U.S. Army Corps of Engineers, Savannah District, Savannah, Georgia, September.

U.S. Army Garrison-Redstone (Army), 2012, ***Redstone Arsenal Environmental Site Access Control Program***, Redstone Arsenal Regulation 200-7, September.

TABLES

Table 4-1

Typical Daily Construction Log
Redstone Arsenal, Madison County, Alabama

Date: _____

Contractor: _____ Project No.: _____

Contract Title: _____ Report No.: _____

Area: _____ Unit: _____ Work: Contract (✓)_____ WO # _____

Shift: _____ Hrs. Wkd: From_____ To _____ Weather _____
Temp. L H

Manpower	No.	Total Hrs.	Major Equipment	No.	Total Hrs.

Description of Work Performed Today:

Remarks by Contractor: (Delays, interruptions, deviations, extra work activities, unusual occurrences, etc., relevant to today's work.)

For Contractor: Title: Date:

USACE Comments and/or Exceptions:

For USACE: Title: Date:

Table 5-1

Nonconformance Report
Redstone Arsenal, Madison County, Alabama

Linked w/Variance No: Page __of __

Project Name:	Project Number:
Date of Issue:	Report Number:
-- Nonconformance Report --	
I. Description of the Nonconformance, include requirement violated: (by the person identifying the nonconformance) Identified by: Date:	
Root Cause of nonconformance:	
II. Recommended Corrective Action: (by the person identifying the nonconformance and the review committee)	
To Be Performed by:	Date:
To Be Verified by:	Date:
III. Corrective Action Implementation: (by those implementing the corrective action)	
Was Performed by:	Date:
Was Verified by:	Date:
How was the Corrective Action Verified?	
IV. Nonconformance Resolution, include action taken to preclude recurrance: (by the review committee)	
Affected Organization:	**-- Signatures --**
Distribution List:	Requested by: _____ Date: _____ (printed name and date) Signature:
	QC Approved by: _____ Date: _____ (printed name and date) Signature:
	Proj. Mgr. Approval:_____ Date: _____ (printed name and date) Signature:
	Client QA Approval: _____ Date: _____ (printed name and date) Signature:

Table 5-2

Nonconformance Report Tracking Register

PROJECT NO.
CONTRACT NO.
NONCONFORMANCE REPORT TRACKING REGISTER

NCR NO.	DESCRIPTION OF NONCONFORMANCE	DATE ISSUED	DATE CLOSED	COMMENTS

Table 5-3

Stop Work Notice
Redstone Arsenal, Madison County, Alabama

Project Name/Location: _____ Project No. _____ D.O. No. _____

S.W.O. No. _____ Date: _____ Page _1_ of ___

1. Written Notice Issued to: Name: _____ Title: _____ Org.: _____	2. P.O. # or Activity: _____ 3. Location: _____ 4. Issued by (name): _____ Issued by (title): _____
5. Verbal Notice Issued to: Name: _____ Title: _____	Date: _____ Time: _____
6. Associated NCR No.: _____	7. Associated CAR No.: _____
8. Stop Work Order Condition Description:	Attachment _____
9. Remedial Action Required: By Whom: _____ Required Remedial Action Determined by: Project Manager: _____ CQA Director/Field CQA Coordinator: _____	Attachment _____ By When: _____ Date: _____ Date: _____
10. Follow-up of Remedial Action Taken: Verbal Notice to Resume Operations Given to: Name: _____ Title: _____ Stop Work Order Cancellation Authorized by: CQA Director/Field CQA Coordinator: _____	Attachment _____ Date: _____ Time: _____ Date: _____

Table 5-4

Stop Work Notice Log
Redstone Arsenal, Madison County, Alabama

SWO No.	Action Party/Organization	Subject	Date Issued	Date Closed

ATTACHMENT 1

FIELD INSPECTION CHECKLIST

	Contract No: W91ZLK-05-D-0006 **EPA ID No.** AL7 210 020 742	**Controlling Document:** **Corrective Measures Implementation (CMI) Plan**
Location: Redstone Arsenal, Madison County, Alabama		
Inspection Type: Field Inspection Checklist **Subject:** Rev. 0 RSA-227 CMI Work Plan	**Inspection Date:**	

Descriptor / Requirements	Comments	Results
4.0 Corrective Measures Implementation		
This section provides an overview of the field activities planned to complete corrective measures at RSA-227. Work presented in this section will be completed in accordance with the procedures described in the CMI Work Plan and other approved documentation as appropriate. RSA-227 CMI Work Plan Chapter 4.0		
4.1 General Scope		
The general scope of work (SOW) includes the following: • Mobilization and demobilization • Utility clearance and marking • Construction of erosion controls • Surveying and marking the proposed excavation and stockpile area • Concrete/sump removal • Excavation of contaminated soil • Confirmation sampling and analysis of the excavated area • Waste characterization sampling • Transport and disposal of arsenic- and PAH-contaminated soils as nonhazardous waste at a Subtitle D landfill • Site restoration, including fence restoration, application of backfill (laboratory demonstrated clean soil) and topsoil, and revegetation with approved grass mixtures RSA-227 CMI Work Plan Chapter 4.0		
4.1.1 Procurement and Subcontracting		
Subcontracted services and imported materials required for the completion of the project may include the following: • Analytical laboratory • Fencing • Concrete/sump removal • Waste transportation and disposal		

Location: Redstone Arsenal, Madison County, Alabama

Inspection Type: Field Inspection Checklist
Subject: RSA-227 CMI Work Plan

Descriptor / Requirements	Comments	Results
4.1.1 Procurement and Subcontracting (Continued)		
• Surveying • Common Fill • Topsoil • Aggregate – crusher run, riprap, drainage stone • Erosion controls • Seed, fertilizer, and mulch • Heavy-duty plastic sheeting RSA-227 CMI Work Plan Chapter 4.0		
The following equipment may be utilized to complete field remediation activities: • Excavator/backhoe to excavate contaminated soil • Front-end loader to consolidate soil and move fill material • Wheel loader to manage segregated waste, debris, and move import fill material • Steel-wheeled compactor to compact fill material • Large capacity water truck (or equivalent) for site dust control and hydration of imported material for compaction (Note: care will be taken not to oversaturate the ground) • Portable fuel tank (e.g., mounted on pickup truck) • Miscellaneous support equipment (e.g., portable storage, computers, copier, fax machine, radios, relief station, eyewash, etc.) RSA-227 CMI Work Plan Chapter 4.0		
Support equipment and materials will be procured through equipment vendors and scientific supply vendors and shipped directly to the site. Office machines in Building 7471 will be used to support the RSA-227 work. RSA-227 CMI Work Plan Chapter 4.0		
4.1.2 Field Personnel		
Field personnel required to complete the field activities may include the following: • Site supervisor • Site safety officer • Field construction quality control system manager • One or two equipment operators • Two laborers The number and schedule of personnel will be adjusted during the project as required for completion. RSA-227 CMI Work Plan Chapter 4.0		

Location: Redstone Arsenal, Madison County, Alabama

Inspection Type: Field Inspection Checklist
Subject: RSA-227 CMI Work Plan

Descriptor / Requirements	Comments	Results
4.2 Preliminary Activities		
Preliminary activities include mobilization, preparations for base access, digging permits, utility markouts, surveying, well closure, and protection of existing features. All field personnel will follow this work plan, as well as other controlling documents, such as the RSA Installation-Wide (IW) Work Plan, the IW Safety and Health Plan, the IW Quality Assurance Program Plan (QAPP), the site-specific Construction QC Plan, and the site-specific Safety and Health Plan. RSA-227 CMI Work Plan Chapter 4.0		
4.2.1 Mobilization		
Mobilization will include deployment of personnel, equipment, subcontractors, and materials necessary to commence CMI activities. Mobilization will include activities at CB&I's Knoxville office and CB&I's field office at RSA. RSA-227 CMI Work Plan Chapter 4.0		
Mobilization activities at the Knoxville/Redstone office will include the procurement of rented items and assembly and packing of equipment and supplies for ground transportation to the site. RSA-227 CMI Work Plan Chapter 4.0		
After mobilization, site-specific training will be conducted for CB&I personnel and subcontractor personnel. This training will include health and safety requirements, project objectives, entry onto RSA, site access control, security procedures, and communications procedures. RSA-227 CMI Work Plan Chapter 4.0		
4.2.2 Access to Redstone Arsenal		
New CB&I personnel and subcontractor personnel will register at the Redstone Arsenal Visitors Center at Gate 9. Personnel with prior approval from a host RSA organization will be issued a personnel badge upon presentation of proper identification. Military and government personnel should present their military or government identification and do not require a host RSA organization. RSA-227 CMI Work Plan Chapter 4.0		
Personnel may access the RSA via any active gate, but should note that gate access hours vary. Gate 9 at Rideout Road is open 24 hours per day 7 days per week. Commercial trucks must pass through the inspection facilities at either Gate 9 or Gate 1 each time they enter RSA. Gate 1 at Martin Road is open 5 days per week (Monday-Friday) from 0530 hrs. to 1600 hrs (2100 hrs for the car lane)., while Gate 3 at Redstone Road is open 5 days per week from 0530 hrs. to 1300 hrs (1800 hrs outbound lanes), and is closed on holidays. RSA-227 CMI Work Plan Chapter 4.0		

Location: Redstone Arsenal, Madison County, Alabama

Inspection Type: Field Inspection Checklist
Subject: RSA-227 CMI Work Plan

Descriptor / Requirements	Comments	Results
4.2.3 Locating, Marking, and Surveying of Excavation		
A licensed land surveyor will be subcontracted to delineate the project work boundary and mark the excavation areas. RSA-227 CMI Work Plan Chapter 4.0		
The surveyor will locate excavation areas based on coordinates to be shown on a figure/drawing and marked in the field with highly visible wooden stakes, tape, or pin flags. Surveying methods will follow the procedures specified in the construction quality assurance plan (CQAP) provided in Appendix D. RSA-227 CMI Work Plan Chapter 4.0		
4.2.4 Digging Permit and Utility Markout		
Permitting required prior to beginning CMI activities is a digging permit administered by the Directorate of Public Works. The digging permits include locating and marking any utilities which may be present in the vicinity of the proposed intrusive work. Notification should by telephone to 256-876-9881 within 14 days of beginning intrusive work. RSA-227 CMI Work Plan Chapter 4.0		
Digging permits must be renewed every 30 days. Renewals should be requested at least 1 week prior to expiration of the current digging permit to avoid temporary shutdowns. RSA-227 CMI Work Plan Chapter 4.0		
4.2.5 Site Control		
CB&I will use the temporary construction fencing materials, barricades, and warning tape, as necessary, to delineate the site exclusion zone, contamination reduction zone, and site support zone in compliance with the SSHP (Appendix C). RSA-227 CMI Work Plan Chapter 4.0		
Warning signs will be posted at conspicuous locations around the perimeter of the construction areas to discourage unauthorized entry. An equipment storage and material laydown area will be designated during mobilization. RSA-227 CMI Work Plan Chapter 4.0		
4.2.6 Storm Water, Erosion, and Sediment Controls		
Storm water management and erosion and sediment control will be provided according to the *Alabama Handbook for Erosion Control, Sediment Control and Stormwater Management on Construction Sites and Urban Areas* (Alabama Soil and Water Conservation Committee [ASWCC], 2014). RSA-227 CMI Work Plan Chapter 4.0		
Installation of temporary controls will be coordinated to maintain effective and continuous control of erosion and pollution. The primary erosion control techniques used will be silt fencing and hay bales (temporary check dams). RSA-227 CMI Work Plan Chapter 4.0		

Location: Redstone Arsenal, Madison County, Alabama

Inspection Type: Field Inspection Checklist
Subject: RSA-227 CMI Work Plan

Descriptor / Requirements	Comments	Results
Erosion control devices will be inspected weekly, and also within 72 hours of any qualifying precipitation event (any precipitation of 0.75 inches or greater in any 24-hour period). Sediment deposits will be manually removed from the silt fence after each rainfall or when sediment reaches one-half of the barrier height. Removed sediment will be added to the contaminated soil for subsequent disposal. RSA-227 CMI Work Plan Chapter 4.0		
Damaged erosion control devices and damaged areas around and beneath the devices will immediately be repaired. Upon completion of the project, erosion and sedimentation control devices will be removed. RSA-227 CMI Work Plan Chapter 4.0		
4.2.7 Well Closure		
No wells are located within the proposed excavation area and nearby wells will be protected during field activities. Therefore, no well closure is proposed.		
4.2.8 Daily Reports		
The requirements for preparation and submittal of daily project documentation are outlined in the CQAP (Appendix D). As indicated in the CQAP, the daily reports (including daily construction logs, etc.) will be provided to the Project Manager or designee during CMI activities. The report will include a running inventory of excavated material. RSA-227 CMI Work Plan Chapter 4.0		
4.3 Stockpile Work Area		
A stockpile work area for excavated soil/concrete will be established. Concrete, steel, and other encountered debris will be segregated and stockpiled separately from excavated soil. The work area will be sized to hold 200 cubic yards. RSA-227 CMI Work Plan Chapter 4.0		
The work area will be lined with heavy plastic sheeting and surrounded by a 1-foot-high berm to prevent runoff water and soil migration. RSA-227 CMI Work Plan Chapter 4.0		
4.4 Excavation Activities		
The excavation areas are summarized in Chapter 3.0 of the CMI work plan. Water will be used during excavation and hauling activities to control fugitive dust, if necessary. Excavated waste/soil will not be reused as clean fill. RSA-227 CMI Work Plan Chapter 4.0		
Spoils will be placed a minimum of 3 feet from the edge of the excavation. RSA-227 CMI Work Plan Chapter 4.0		

Location: Redstone Arsenal, Madison County, Alabama

Inspection Type: Field Inspection Checklist
Subject: RSA-227 CMI Work Plan

Descriptor / Requirements	Comments	Results
The excavated material will be stockpiled or staged prior to waste characterization sampling and off-site disposal. The excavated material will be staged on impervious material such plastic sheeting and covered with waterproof material (i.e., tarpaulin or 10-mil plastic sheeting). Containment should control runoff, leaching, or fugitive dust emissions. RSA-227 CMI Work Plan Chapter 4.0		
Excavation will be accomplished according to the Safety and Health Regulations for Excavations (Occupational Safety and Health Administration 29 CFR Part 1926 Subpart P). Excavations are not expected to go below 5 feet bgs. For excavations deeper than four feet, soils will be excavated to maintain stable sidewalls (i.e., sloped or benched to 1½:1 horizontal to vertical). RSA-227 CMI Work Plan Chapter 4.0		
Excavations adjacent to footings should not be excavated within a 1:1 (horizontal to vertical) downward projection from adjacent footings ("footing influence zone") to avoid potential undermining without approval from a registered professional engineer. Excavation adjacent to Building 5492 is not expected to proceed below the depth of the footer. RSA-227 CMI Work Plan Chapter 4.0		
4.5 Confirmation Sampling		
The excavations at RSA-227 address surface and subsurface soil contamination. Following completion of the proposed excavations, soil samples will be collected around the perimeter sidewalls and floor within the RSA-227 proposed excavation areas to ensure that the soil contaminant concentrations do not exceed the CGs for arsenic (15 mg/kg surface soil, 18 mg/kg subsurface soil) or PAHs (0.62 mg/kg benzo(a)pyrene equivalents). RSA-227 CMI Work Plan Chapter 4.0		
Confirmation samples will be collected on each sidewall at a maximum spacing of 50 feet between samples (i.e., because the excavation sidewalls are 50 feet or less, one sample will be collected from each sidewall). In addition, a composite sample will be collected from the excavation floor. Each of the sidewall and floor confirmation soil samples will consist of a composite sample with 5 aliquots each (samples from the center and the upper and lower left and right quadrants). The confirmation soil samples from the RSA-227 excavation area will be analyzed for TAL Metals (Methods 3050B/6010C/7471A) and PAHs (Method 3540C/8270D) using EPA Test Methods for Evaluating Solid Waste, Physical/Chemical Methods (SW-846) per the RSA SAP.		

Location: Redstone Arsenal, Madison County, Alabama

Inspection Type: Field Inspection Checklist
Subject: RSA-227 CMI Work Plan

Descriptor / Requirements	Comments	Results
Samples from the perimeter and the floor of the shallow excavations (0 to 4 foot bgs) will be collected by stainless-steel spoon and placed in a stainless-steel bowl. Debris such as grass, roots, or gravel will be removed, and the soil will be thoroughly mixed (homogenized) and then placed in the appropriate sample containers in accordance with SOPP Nos. 2.0, 5.0, 6.0, and 24.0 (Appendix E). Sample collection logs will be filled out to document the sampling in accordance with SOPP No. 1.0. If floor confirmation sample results do not achieve RGs, the excavation will be expanded downward. Aliquots from deeper excavations (greater than four feet in depth) will be collected from an excavator bucket.		
4.6 RDW/IDW Management		
Other remediation-derived waste (RDW)/investigative derived waste (IDW) generated during the CMI activities at RSA-227 is expected to include soil cuttings, decontamination fluids, and disposable personal protective equipment (PPE). RSA-227 CMI Plan Section 4.0		
AAC 335-14-3-01(2) allows the use of generator knowledge in the hazardous waste determination process. RSA-227 CMI Plan Section 4.0		
Generator knowledge consists of evaluating the following factors: • Process knowledge – site processes are evaluated to determine if any activity might have generated a listed waste which still persists in soil or groundwater. • Past IDW management practices – IDW has been managed at RSA for over 20 years. Changes to regulations directing this management have been minor. The Army intends to follow management practices which have been accepted by ADEM during prior investigations. • Sampling results from past waste characterization sampling – historical waste characterization sampling may indicate whether future IDW is likely to be a nonhazardous waste or if it may have characteristics of a hazardous waste. • Sampling results from past soil and groundwater samples – historical sampling results from soil and groundwater sampling may indicate whether future IDW is likely to be a nonhazardous waste or if it may have characteristics of a hazardous waste. RSA-227 CMI Plan Section 4.0		
In determining whether to manage IDW as nonhazardous or hazardous, factors such as generator knowledge and real-time field measurements or observations will be considered. Records supporting the use of generator knowledge will be available for review at the CB&I field office (Building 7471). RSA-227 CMI Plan Section 4.0		

Location: Redstone Arsenal, Madison County, Alabama

Inspection Type: Field Inspection Checklist
Subject: RSA-227 CMI Work Plan

Descriptor / Requirements	Comments	Results
IDW will be containerized, labeled, and stored in accordance with AAC 335-14 as applicable and as described in the Alabama Environmental Investigation and Remediation Guidance (ADEM, 2005). IDW PPE will be disposed as normal household trash in the dumpster at Building 7471; contaminated PPE will be disposed of with the contaminated waste stream (i.e., PPE generated during soil excavation will be disposed of at the Subtitle D landfill). Other types of IDW, if generated, will be managed in accordance with Table 2 of Appendix G of ADEM (2005). RSA-227 CMI Plan Section 4.0		
IDW considered nonhazardous using generator knowledge and field observations, soil cuttings and liquid waste will be containerized and stored on site pending sampling and analysis. Analytical testing and subsequent evaluations will be performed to determine if soil can be left on site or if disposal at a Subtitle D landfill is needed. Sampling and analysis of IDW are specified in Appendix E. RSA-227 CMI Plan Section 4.0		
Any soil IDW determined to be hazardous will be managed and disposed in accordance with SOPP No. 4.0, *Investigation Derived Waste, Rev 2*. IDW believed to be hazardous will be containerized in 55-gallon drums or other suitable containers with tight-fitting lids or covers. These drums/containers will be labeled, moved to a satellite accumulation area or 90-day storage within 72 hours. RSA-227 CMI Plan Section 4.0		
A RCRA hazardous waste determination will be made using waste identification criteria described in AAC R. 335-14-2-.01 through AAC R. 335-14-2-.04. Types of analyses are site-specific, but include toxicity characteristic leaching procedure (TCLP) VOCs, TCLP SVOCs, and TCLP metals. Waste where TCLP results exceed limits specified at AAC 335-14-2-.03, Table 1, will be treated and disposed as Hazardous waste. RSA-227 CMI Plan Section 4.0		
Nonhazardous soil IDW disposal practices include placing the waste at the site or disposal at a Subtitle D landfill. Nonhazardous water IDW may be processed through RSA's sewage treatment plant or through an appropriate RCRA-permitted facility. RSA-227 CMI Plan Section 4.0		
Hazardous soil IDW disposal includes disposal in a landfill certified to accept the waste. Hazardous water IDW disposal includes treatment in a facility that meets the definition of a wastewater treatment unit as described in AAC R.335-14-1-.02. RSA-227 CMI Plan Section 4.0		
4.7 Waste Characterization Sampling		
Contaminated soils will be stockpiled during the excavation at RSA-227. Grab samples will be randomly retrieved from five points within each of the decision units and composited. Each of these composites representing 200 cubic yards (maximum) will be tested for TCLP arsenic. RSA-227 CMI Work Plan Chapter 4.0		

Location: Redstone Arsenal, Madison County, Alabama

Inspection Type: Field Inspection Checklist
Subject: RSA-227 CMI Work Plan

Descriptor / Requirements	Comments	Results
If the TCLP arsenic concentrations are below 5 mg/L, the soil may be shipped as nonhazardous waste. A stabilization agent will be mixed with excavated soil if TCLP arsenic concentrations exceed 5 mg/L and an additional composite sample will be collected for analysis. RSA-227 CMI Work Plan Chapter 4.0		
The waste characterization sample results will be compared to the regulatory levels for TCLP arsenic. Soils are not expected to be characteristically hazardous. It is expected that following stabilization, the excavated soils at RSA-227 will be managed as a nonhazardous special waste and disposed in a Subtitle D landfill. RSA-227 CMI Work Plan Chapter 4.0		
The waste characterization results will be submitted to ADEM for approval and an ADEM waste certification number will be obtained prior to disposal of the excavated soils. RSA-227 CMI Work Plan Chapter 4.0		
4.8 Waste Soil Transportation and Disposal		
CB&I will use a licensed transportation and disposal subcontractor to complete these activities. It is assumed that the arsenic- and PAH-contaminated soil will be disposed as nonhazardous waste at a Subtitle D landfill. Transportation and disposal of the excavated waste will begin after approval by ADEM and the selected waste disposal facility. A RSA representative will review and sign the waste manifest. RSA-227 CMI Work Plan Chapter 4.0		
CB&I will document the quantities of waste loaded onto the dump trucks and facilitate the Bill of Lading or shipping paper documentation for the non-hazardous waste shipments. Transportation will comply with all U.S. Department of Transportation regulations. RSA-227 CMI Work Plan Chapter 4.0		
CB&I will coordinate with the transporters so that the waste will be shipped to arrive on schedule at the landfill. CB&I will receive written approval from the landfill (and ADEM) prior to shipping waste to their facility. The landfill will provide CB&I with a signed manifest for each load received and processed. RSA-227 CMI Work Plan Chapter 4.0		
4.9 Post-Excavation Activities		
The following sections describe the post-excavation activities. RSA-227 CMI Work Plan Chapter 4.0		
4.9.1 Backfilling and Site Restoration		
CB&I will obtain approximately 140 loose cubic yards of fill material from an RSA Borrow Area or another approved off-site borrow source or equivalent. RSA-227 CMI Work Plan Chapter 4.0		

Location: Redstone Arsenal, Madison County, Alabama

Inspection Type: Field Inspection Checklist
Subject: RSA-227 CMI Work Plan

Descriptor / Requirements	Comments	Results
If sampling of the on-site borrow source material has not been conducted, CB&I will sample the material to confirm it is acceptable for use as backfill at the sites. The borrow material sampling, will include one 5-point composite sample analyzed for TCL SVOCs, TCL pesticides/PCBs, and TAL metals and one sample analyzed for TCL VOCs. RSA-227 CMI Work Plan Chapter 4.0		
The fill material will be dumped near each excavation area using a dump truck and placed and compacted in each excavation using the excavator. RSA-227 CMI Work Plan Chapter 4.0		
Once the areas have been backfilled and compacted, clean top soil will be placed over the affected areas. The disturbed areas will be reseeded and mulched per Appendix F. RSA-227 CMI Work Plan Chapter 4.0		
A site inspection will be conducted two to four weeks after the seeding to confirm the revegetation is successful. Permanent security fencing will be restored. Temporary fencing, sheeting, hay bales, stakes, and other project-related items will be removed from the site and disposed in accordance with SOPP 4.0, *Investigation-Derived Waste* (Shaw, 2010b). RSA-227 CMI Work Plan Chapter 4.0		
4.9.2 Equipment Decontamination		
Non-disposable sampling equipment will be decontaminated prior to beginning work at the site and prior to the collection of individual samples. All sampling equipment and heavy equipment will be decontaminated in accordance with SOPP 3.0, *Field Equipment Decontamination*. RSA-227 CMI Work Plan Chapter 4.0		
4.9.3 Temporary Storm Water Erosion and Sediment Control Removal		
Upon completion of site restoration activities, temporary storm water erosion and sediment controls will be removed and disposed off site at the RSA construction debris landfill. The silt fence will remain in place until after the vegetation is established. RSA-227 CMI Work Plan Chapter 4.0		
Once the silt fence is removed, the posts will pulled from the ground and the remaining disturbed area will be reseeded. The removed silt fence will also be disposed off site at the RSA construction & demolition landfill. RSA-227 CMI Work Plan Chapter 4.0		
4.9.4 Demobilization		
Personnel, equipment, and subcontractors will be demobilized from the project site after completion of remedial activities. A small crew and minimal equipment will be retained as required to remove surplus materials and clean staging areas. RSA-227 CMI Work Plan Chapter 4.0		

Location: Redstone Arsenal, Madison County, Alabama

Inspection Type: Field Inspection Checklist
Subject: RSA-227 CMI Work Plan

Descriptor / Requirements	Comments	Results
Demobilization will primarily consist of disassembly, packing, and return of rented equipment to suppliers and travel for personnel back to their home. RSA-227 CMI Work Plan Chapter 4.0		
4.10 Inspections for Field Activities		
Inspections will be performed using the three-phase inspection method. Inspections may be performed using visual observation, measurement of materials or equipment, examination of documentation and/or certification, evaluation of performance, or testing. RSA-227 CMI Work Plan Chapter 4.0		
Preparatory Inspections/Meetings will be conducted to discuss training, procedures, documentation, equipment, and materials required for the task. Preparatory Inspections/Meetings will be performed prior to start-up and will examine training, procedures, equipment and materials, work plans and documents, and overall readiness to perform work. Participants in the Preparatory Inspections/Meetings will include, but are not limited to, the task subcontractor, the project Quality Control Site Manager (QCSM), the regulatory representative, and the project health and safety representative. RSA-227 CMI Work Plan Chapter 4.0		
Initial Inspections will be conducted when the task is started. Initial Inspections will include an examination of the quality of workmanship and a review of control testing for compliance with contract and work plan requirements. RSA-227 CMI Work Plan Chapter 4.0		
Follow-Up Inspections will be conducted as the task is ongoing. Follow-Up Inspections will be performed to verify compliance with procedures. They will ensure a continuation of quality and safety standards established during preparatory and initial inspections until completion of each definable work feature. RSA-227 CMI Work Plan Chapter 4.0		
Final Follow-Up Inspections will be performed to ensure that completed features of work meet contract requirements. Any deficiencies noted during this inspection will be documented and a determination made as to the corrective action(s) necessary to mitigate each deficiency. All significant deficiencies must be corrected prior to turnover. RSA-227 CMI Work Plan Chapter 4.0		
At a minimum, inspection files will include inspection reports/checklists, inspection responses, any supporting documents as well as applicable comments. RSA-227 CMI Work Plan Chapter 4.0		
4.11 Corrective Measures Implementation Reporting		
Progress reports are not required, as implementation of the CMI is scheduled for completion within 180 days of starting construction. However, if completion requires greater than 180 days, the Army will submit CMI progress reports in accordance with Section VIII.D.1 of the RCRA permit. RSA-227 CMI Work Plan Chapter 4.0		

Location: Redstone Arsenal, Madison County, Alabama

Inspection Type: Field Inspection Checklist
Subject: RSA-227 CMI Work Plan

Descriptor / Requirements	Comments	Results
Upon completion of the approved CMI, a final report will be prepared and submitted to ADEM to satisfy the applicable requirements of the Alabama Environmental Investigation and Remediation Guidance (ADEM, 2005). The final report of corrective measures will be submitted within 90 days of attainment of cleanup levels or goals pursuant to Part VIII.D of Permit # AL7-210-020-742. The final report will include the following: • Description of activities completed. • As-built construction drawings presenting the final limits of soil excavations at each site and the locations of confirmation samples. • Waste manifests indicating the handling of the excavated material that has been shipped off site to an ADEM-approved and certified landfill. • Monitoring data (soil, air, dust, water) collected for any reason during the construction period for the purposes of monitoring potential for human and ecological exposure. • Certification, prepared in accordance with AAC 335-13-8-02 (2)(d) by RSA and a registered professional engineer (State of Alabama), that the corrective measures required by the RCRA permit are complete. • Appendices consisting of site photographs, analytical report, data validation documentation, and waste manifests. RSA-227 CMI Work Plan Chapter 4.0		

Results:
S = Satisfactory
I = Incomplete at the time of audit or surveillance. To be verified at a later date
O = Observation
F = Finding
NA = Not Applicable

Comments:_____

QA Manager:_____ **Date:**_____

APPENDIX E

DATA COLLECTION QUALITY ASSURANCE PLAN

1.0 Introduction

This data collection quality assurance plan (DCQAP) has been developed as a standard document in support of corrective measures implementation (CMI) at RSA-227. This document provides procedures, guidelines, and practices for the control of equipment, materials, and services anticipated to be used during the field sampling phase of the soil confirmation sampling following the excavations at the site.

1.1 Purpose

The purpose of this DCQAP is to define the methodology and practices that control the quality of work performed during implementation of the corrective measures at RSA-227. The objective of this DCQAP is to ensure that the data collected are of sufficient quality to verify that corrective measures have been accomplished. This DCQAP is intended for use in conjunction with the Redstone Arsenal (RSA) installation-wide work plan (IT Corporation, 2002; Shaw Environmental, Inc. [Shaw], 2010) and the installation-wide (IW) quality assurance program plan (QAPP) for the Program Management Contract (Shaw, 2013). The work guidance documents that will govern the quality practices for this task will include the following:

- The CMI work plan and the associated appendices
- The IW QAPP
- The standard operating project procedures (IW QAPP Volume II) (Shaw, 2013).

Data collection will be in accordance with Alabama Department of Environmental Management (ADEM) guidance (ADEM, 2005; 2010a,b).

1.2 Document Organization

This document has been organized to present the DCQAP in the following format:

- Introduction – Chapter 1.0
- References – Chapter 2.0
- Uniform Federal Policy (UFP) QAPP Worksheets – Chapter 3.0.

Chapter 1.0 provides a brief overview of this DCQAP and introduces the UFP QAPP worksheets. References are included in Chapter 2.0. The worksheets provided in Chapter 3.0 present a description of the proposed work in compliance with the UFP QAPP format. Worksheet No. 2, *Identifying Information*, provides a crosswalk to the IW QAPP, where needed, and summarizes the site-specific worksheets that are included in this plan.

2.0 References

Alabama Department of Environmental Management (ADEM), 2010a, Memorandum from James L. Bryant, Environmental Services Branch, ***In-situ Sampling for the Purposes of Waste Characterization/Disposal of Soil***, August.

Alabama Department of Environmental Management (ADEM), 2010b, ***General Soil Sample Collection***, July.

Alabama Department of Environmental Management (ADEM), 2005, ***Alabama Environmental Investigation and Remediation Guidance***, September.

IT Corporation, 2002, ***Draft-Final, Revision 2, Installation-Wide Work Plan, Redstone Arsenal, Madison County, Alabama***, June.

Shaw Environmental, Inc. (Shaw), 2013, ***Revision 2, Installation-Wide Quality Assurance Program Plan for the Program Management Contract, Volume I and Volume II, U.S. Army Garrison-Redstone, Madison County, Alabama***, May.

Shaw Environmental, Inc. (Shaw), 2010, ***Installation-Wide Work Plan, Final Appendices B, C, D, E, F, U.S. Army Garrison-Redstone, Madison County, Alabama***, prepared for U.S. Army Corps of Engineers, Savannah District, Savannah, Georgia, September.

U.S. Department of Defense, 2013, ***Quality Systems Manual for Environmental Laboratories***, Version 5.0.

U.S. Environmental Protection Agency (EPA), 2014a, ***Contract Laboratory Program National Functional Guidelines for Superfund Organic Methods Data Review***, EPA-540-R-014-002, August.

U.S. Environmental Protection Agency (EPA), 2014b, ***Contract Laboratory Program National Functional Guidelines for Superfund Inorganic Data Review***, EPA-540-R-013-001, August.

U.S. Environmental Protection Agency (EPA), 1994, ***Region 3 Modifications to the Laboratory Data Validation Functional Guidelines for Evaluating Organic Analyses***, September.

U.S. Environmental Protection Agency (EPA), 1993, ***Region 3 Modifications to the Laboratory Data Validation Functional Guidelines for Evaluating Inorganic Analyses***, April.

3.0 Uniform Federal Policy Quality Assurance Project Plan Worksheets

The quality assurance requirements needed to support the sampling and data collection activities in this work plan were adopted under the UFP for QAPPs and implemented in a graded approach.

The crosswalk presented in Worksheet No. 2 provides direction to the related documents or information pertaining to the quality assurance project plan requirements. Where site-specific information is required to meet the elements of the UFP QAPP, the supplemental worksheets will be completed in their entirety and included with the crosswalk in this appendix. For the CMI work plan, the supplemental worksheets include the following:

- Worksheet No. 2 – CMI Work Plan Identifying Information
- Worksheet No. 3 – Distribution List
- Worksheet No. 4 – Project Personnel Sign-Off Sheet
- Worksheet No. 14 – Summary of Project Tasks
- Worksheet No. 18 – Sampling Locations and Methods/Standard Operating Project Procedure Requirements
- Worksheet No. 20 – Field Quality Control Sample Summary
- Worksheet No. 26 – Sample Handling System.

The purpose of this DCQAP is to ensure that the data collected are of sufficient quality to achieve the corrective measures goals during excavation of contaminated soil at RSA-227. The objective of the work plan is to present the sampling rationale and provide the details required to complete the field efforts. The work plan is intended for use in conjunction with the IW work plan and the IW QAPP for the Program Management Contract.

Worksheet No. 2 CMI Work Plan Identifying Information

Site Name/Project Name	Redstone Arsenal (RSA), Madison County, Alabama/RSA Program Management Contract (PMC)
Site Location	Groundwater Unit RSA-147
Site Number/Code	RSA-227
Operable Unit (OU)	OU-06
Contractor Name	CB&I Federal Services LLC (CB&I)
Contract Number	W91ZLK-09-D-0006
Contract Title	RSA PMC
Work Assignment Number # (Project #)	CB&I Project No. 147104
Guidance Documents (Manuals, Guidelines, Plans, etc. Used to Prepare the DCQAP)	Intergovernmental Data Quality Task Force, 2005, *Uniform Federal Policy for Quality Assurance Project Plans* U.S. Department of Defense (DoD), 2013, *Quality Systems Manual*, Version 5.0. U.S. Environmental Protection Agency (EPA), 2014, *National Functional Guidelines for Superfund Inorganic Data Review*, EPA 540-R-013-001 U.S. Environmental Protection Agency (EPA), 2014, *EPA National Functional Guidelines for Superfund Organic Data Review*, EPA 540-R-014-002
Regulatory Program	Resource Conservation and Recovery Act (RCRA), Alabama Department of Environmental Management (ADEM)
Approval Entities	U.S. Army Garrison - Redstone, ADEM
Work Plan	☒ Corrective Measures Implementation ☐ Generic Field Sampling Plan
Dates of Scoping Sessions	
Dates and Titles of SFSP Documents Written for Previous Site Work (if applicable)	References used to prepare the CMI work plan are found in Chapter 6.0 of the document.
Organizational Partners (stakeholders) and Their Connection with Lead Organization	U.S. Army Garrison-Redstone – Overseeing CB&I's performance under this PMC point of contact with regulators ADEM – State regulator overseeing RSA environmental and remediation activities
Data Users	CB&I Project/Task Leads, Engineering, support personnel, U.S. Army Garrison-Redstone, ADEM

Worksheet No. 2 CMI Work Plan Identifying Information

Required QAPP Element(s) and Corresponding QAPP Section(s)	Required Information	Crosswalk to Related Worksheet / Documents
Project Management and Objectives		
2.1 Title and Approval Page	Title and Approval Page	Worksheet No. 1 − Title and Approval Page
2.2 Document Format and Table of Contents 2.2.1 Document Control Format 2.2.2 Document Control Numbering System 2.2.3 Table of Contents 2.2.4 QAPP Identifying Information	Table of Contents QAPP Identifying Information	The Table of Contents is provided following the Title and Approval page. Worksheet No. 2 − Identifying Information
2.3 Distribution List and Project Personnel Sign-Off Sheet 2.3.1 Distribution List 2.3.2 Project Personnel Sign-Off Sheet	Distribution List Project Personnel Sign-Off Sheet	Worksheet No. 3 − Distribution List Worksheet No. 4 – Project Personnel Sign-Off Sheet
2.4 Project Organization 2.4.1 Project Organization Chart 2.4.2 Communication Pathways 2.4.3 Personnel Responsibilities and Qualifications 2.4.4 Special Training Requirements and Certification	Project Organization Chart Communication Pathways Personnel Responsibilities and Qualifications Table Special Personnel Training Requirements Table	Worksheet No. 5 − Project Organizational Chart is provided in the IW QAPP, Volume I (Shaw, 2013) Worksheet No. 6 – Worksheet No. 6 in the IW QAPP (Shaw, 2013) Worksheet No. 7 – Personnel Responsibilities and Qualifications Table (Appendix F, Section 2.0) Worksheet No. 8 − Special Personnel Training Requirements Table. There are no special training requirements for this task.
2.5 Project Planning/Problem Definition 2.5.1 Project Planning (Scoping) 2.5.2 Problem Definition, Site History, and Background	Project Planning Session Documentation (including “Data Needs” tables) Project Scoping Session Participants Sheet Problem Definition, Site History, and Background Site Maps (historical and present)	Worksheet No. 10 − Problem Definition See Chapter 2.0 of the CMI Work Plan

Worksheet No. 2 CMI Work Plan Identifying Information

Required QAPP Element(s) and Corresponding QAPP Section(s)	Required Information	Crosswalk to Related Worksheet / Documents
2.6 Project Quality Objectives and Measurement Performance Criteria 2.6.1 Development of Project Quality Objectives Using the Systematic Planning Process 2.6.2 Measurement Performance Criteria	Site-Specific Project Quality Objectives Measurement Performance Criteria Table	Worksheet No. 11 − Project Quality Objectives/Systematic Planning Process Statements - Sample and data collection for this activity are not of investigative nature but are for confirmation analysis and waste characterization. Worksheet No. 12 − Measurement Performance Criteria Tables are presented in the IW QAPP, Volume I, Attachment 2a (Shaw, 2013). Site-specific information listing the analyses to be performed is presented in Worksheet No. 18, Sampling Locations, Analytical, and SOPP Requirements, and Worksheet No. 20, Field Quality Control Sample Summary.
2.7 Secondary Data Evaluation	Sources of Secondary Data and Information Secondary Data Criteria and Limitations Table	Worksheet No. 13 − Secondary Data was evaluated during the risk assessment. Sample and data collection for this activity are for confirmation analysis and waste characterization.
2.8 Project Overview and Schedule 2.8.1 Project Overview 2.8.2 Project Schedule	Summary of Project Tasks Reference Limits and Evaluation Table Project Schedule/Timeline Table	Worksheet No. 14 − Summary of Project Tasks Summary of activities to be performed during the corrective measures is presented in Chapter 4.0 of the CMIP. Worksheet No. 15 − Reference Limits and Evaluation Table is presented in the IW QAPP Volume I (Shaw, 2013), Attachment 2a. Site-specific information listing the analyses to be performed is presented in Worksheet No. 18, Sampling Locations, Analytical, and SOPP Requirements, and Worksheet No. 20, Field Quality Control Sample Summary. Worksheet No. 16 − Project Schedule/Timeline Table The construction schedules are found in Appendix C and are based on the regulatory requirements.

Worksheet No. 2 CMI Work Plan Identifying Information

Required QAPP Element(s) and Corresponding QAPP Section(s)	Required Information	Crosswalk to Related Worksheet / Documents
Measurement/Data Acquisition		
3.1 Sampling Tasks 3.1.1 Sampling Process Design and Rationale 3.1.2 Sampling Procedures and Requirements 3.1.2.1 Sampling Collection Procedures 3.1.2.2 Sample Containers, Volume, and Preservation 3.1.2.3 Equipment/Sample Containers Cleaning and Decontamination Procedures 3.1.2.4 Field Equipment Calibration, Maintenance, Testing, and Inspection Procedures 3.1.2.5 Supply Inspection and Acceptance Procedures 3.1.2.6 Field Documentation Procedures	Sampling Design and Rationale Sample Location Map Sampling Locations and Methods / Standard Operating Procedures (SOP) Requirements Table Analytical Methods/SOP Requirements Table Field QC Sample Summary Table Sampling SOPPs Project Sampling SOPP References Table Field Equipment Calibration, Maintenance, Testing, and Inspection Table	Worksheet No. 17 − Sampling Design and Rationale for the confirmation samples are presented in Section 4.5 of the CMI Work Plan. Worksheet No. 18 − Sampling Locations, Analytical, and SOPP Requirements Worksheet No. 19 − Analytical SOP Requirements Table (Sample Containers Preservation and Holding Times) are presented in the IW QAPP, Volume I, Attachment 2a (Shaw, 2013). Site-specific information listing the analyses to be performed is presented in Worksheet No. 18, Sampling Locations and Analytical Requirements Table, and Worksheet No. 20, Field Quality Control Sample Summary. Worksheet No. 20 – Field Quality Control Sample Summary Worksheet No. 21 − Project Sampling SOPP Reference Table. There are no project specific SOPPs. The complete list of SOPPs are provided in Worksheet No. 21, Project Sampling SOPP References, in the IW QAPP, Volume I (Shaw, 2013). Additionally, copies of the field sampling SOPPs are provided in the IW QAPP, Volume II (Shaw, 2013). Worksheet No. 22 − Field Equipment Calibration Maintenance, Testing, and Inspection Table This Table is presented in Worksheet No. 22 of the IW QAPP, Volume I (Shaw, 2013).

Worksheet No. 2 CMI Work Plan Identifying Information

Required QAPP Element(s) and Corresponding QAPP Section(s)	Required Information	Crosswalk to Related Worksheet / Documents
3.2 Analytical Tasks 3.2.1 Analytical SOPs 3.2.2 Analytical Instrument Calibration Procedures 3.2.3 Analytical Instrument and Equipment Maintenance, Testing, and Inspection Procedures 3.2.4 Analytical Supply Inspection and Acceptance Procedures	Analytical SOPs Analytical SOP References Table Analytical Instrument Calibration Table Analytical Instrument and Equipment Maintenance, Testing, and Inspection Table	Worksheet No. 23 − Analytical Reference Table – Laboratory are provided in the IW QAPP, Volume I, Attachment 2a (Shaw, 2013). Site-specific information listing the analyses to be performed is presented in Worksheet No. 18, Sampling Locations, Analytical, and SOPP Requirements, and Worksheet No. 20, Field Quality Control Sample Summary. Worksheet No. 24 − Analytical Instrument Calibration Table – Laboratory are provided in the IW QAPP, Volume I, Attachment 2a (Shaw, 2013). Site-specific information listing the analyses to be performed is presented in Worksheet No. 18, Sampling Locations and Analytical Requirements Table, and Worksheet No. 20, Field Quality Control Sample Summary. Worksheet No. 25 − Analytical Instrument and Equipment Maintenance, Testing, and Inspection are provided in the IW QAPP, Volume I, Attachment 2a (Shaw, 2013).
3.3 Sample Collection Documentation, Handling, Tracking, and Custody Procedures 3.3.1 Sample Collection Documentation 3.3.2 Sample Handling and Tracking System 3.3.3 Sample Custody	Sample Collection Documentation Handling, Tracking, and Custody SOPs Sample Container Identification Example Chain-of-Custody (COC) Form and Seal	Worksheet No. 26 − Sample Handling System Worksheet No. 27 − Sample Custody Requirements are provided in the IW QAPP, Volume I (Shaw, 2013) A sample Chain-of-Custody Form is provided in the IW QAPP Volume I (Shaw, 2013).
3.4 Quality Control (QC) Samples 3.4.1 Sampling Quality Control Samples 3.4.2 Analytical Quality Control Samples	QC Samples Table Screening/Confirmatory Analysis Decision Tree	Worksheet No. 28 – Laboratory QC Sample Tables are presented in their entirety in the IW QAPP Volume I Attachment 2a (Shaw 2013).

Worksheet No. 2 CMI Work Plan Identifying Information

Required QAPP Element(s) and Corresponding QAPP Section(s)	Required Information	Crosswalk to Related Worksheet / Documents
3.5 Data Management Tasks 3.5.1 Project Documentation and Records 3.5.2 Data Package Deliverables 3.5.3 Data Reporting Formats 3.5.4 Data Handling and Management 3.5.5 Data Tracking and Control	Project Documents and Records Table Analytical Services Table Data Management SOPs	Worksheet No. 29 − Project Documents and Records Table (SOPP RSA-11.0, "Field-Generated Records Management" provides additional guidance—included in the IW QAPP Volume II (Shaw, 2013). Worksheet No. 30 − Analytical Services Table is presented in its entirety in the IW QAPP Volume I Attachment 2a (Shaw, 2013).
Assessment/Oversight		
4.1 Assessments and Response Actions 4.1.1 Planned Assessments 4.1.2 Assessment Findings and Corrective Action Responses	Assessments and Response Actions Planned Project Assessments Table Audit Checklists Assessment Findings and Corrective Action Responses Table	Worksheet No. 31 − Planned Project Assessments Table, Constructions specific assessment and inspection are provided in Appendix F. Worksheet No. 32 − Assessment Findings and Corrective Action Responses Shaw SOPs for quality assessments and reporting are listed in Worksheet No. 21, and a copy is provided in the IW QAPP Volume II (Shaw, 2013). The laboratory audit checklists and assessments are provided in the IW QAPP Volume I (Shaw, 2013).
4.2 QA Management Reports	QA Management Reports Table	Worksheet No. 33 − QA Management Reports Table Shaw SOPs for quality assessment and reporting are provided in the IW QAPP Volume II (Shaw, 2013).
4.3 Final Project Report	All QA Management Reports attached Additional data quality concerns and resolution documentation	Worksheet No. 33 − QA Management Reports Table Shaw SOPs for quality assessment and reporting are provided in the IW QAPP Volume II (Shaw, 2013).

Worksheet No. 2 CMI Work Plan Identifying Information

Required QAPP Element(s) and Corresponding QAPP Section(s)	Required Information	Crosswalk to Related Worksheet / Documents
Data Review		
5.1 Overview		
5.2 Data Review Steps 5.2.1 Step I: Verification 5.2.2 Step II: Validation 5.2.2.1 Step IIa Validation Activities 5.2.2.2 Step IIb Validation Activities 5.2.3 Step III: Usability Assessment 5.2.3.1 Data Limitations and Actions from Usability Assessment 5.2.3.2 Activities	Verification (Step I) Process Table Validation (Steps IIa and IIb) Process Table Validation (Steps IIa and IIb) Summary Table Usability Assessment	Worksheet No. 34 − Verification (Step I) Process Table is presented in the IW QAPP, Volume I (Shaw, 2013) Worksheet No. 35 − Validation (Steps IIa and IIb) Process Table is presented in the IW QAPP Volume I (Shaw, 2013) Worksheet No. 36 − Validation (Steps IIa and IIb) Summary Table is presented in the IW QAPP, Volume I, Attachment 2a (Shaw, 2013) Worksheet No. 37 − Usability Assessment is presented in the IW QAPP, Volume I (Shaw, 2013)
5.3 Streamlining Data Review 5.3.1 Data Review Steps To Be Streamlined 5.3.2 Criteria for Streamlining Data Review 5.3.3 Amounts and Types of Data Appropriate for Streamlining	Automated Data Review A1 and A2 data files for each sample delivery group (SDG) Verification sampling or as needed Applicable to 90 percent data that are not manually validated	Automated Data Review (Laboratory Data Consultants) is used by the laboratory and Shaw E&I to automatically review electronic data against the QAPP requirements. In addition, Empirical Laboratories uses the Element Data System (Promium, LLC) ,which is set up with all project requirements and allows real time data evaluation for compliance with calibration, spike, surrogate, and blank requirements.

Shaw Environmental, Inc. (Shaw), 2013, ***Revision 2, Installation-Wide Quality Assurance Program Plan for the Program Management Contract, Volumes I and II***, ***U.S. Army Garrison-Redstone, Madison County, Alabama***, May.

Worksheet No. 3 Distribution List

SFSP Recipients	Title	Organization	Telephone Number	Fax Number	E-mail Address
Robert P. Gorman	Contracting Officer Representative	U.S. Army Garrison - Redstone	256-876-3814	256-876-0887	robert.p.gorman10.civ@mail.mil
Terry de la Paz	Chief Installation Restoration Branch	U.S. Army Garrison - Redstone	256-955-6968	256-876-0887	terry.m.delapaz.civ@mail.mil
Kajuana D. Rice	Army Site Task Manager	U.S. Army Garrison - Redstone	256-313-0368	256-876-0887	kajuana.d.rice.ctr@mail.mil
Keith West	Lead Remedial Project Manager	ADEM	334-271-7925	334-271-7950	knw @adem.state.al.us
Art Holcomb	CB&I Task Order 0008 PM	CB&I	256-213-2188	256-213-2190	art.holcomb@cbifederalservices.com
Emily Davis	Program Senior Scientist	CB&I	717-737-1049	717-763-0553	emily.davis@cbifederalservices.com
David W. Marcum	CB&I Project QA/QC Manager	CB&I	256-213-2193	256-213-2190	dave.marcum@cbifederalservices.com
Brian Rhodes	Program Regulatory/Waste Specialist	CB&I	256-213-2202	256-213-2190	brian.rhodes@cbifederalservices.com
Brian Rhodes	CB&I Quality Control Site Manager	CB&I	256-213-2202	256-213-2190	brian.rhodes@cbifederalservices.com
Vicki Graves	Program Chemist	CB&I	865-560-7818	865-560-7956	vicki.graves@cbifederalservices.com
Allen Bradley	Group 3 Cost Account Manager	CB&I	865-560-7793	865-560-7956	allen.bradley@cbifederalservices.com
Martha Adams	Group 3 Technical Manager	CB&I	619-446-4521	916-565-4356	martha.adams@cbifederalservices.com
Ray Clark	Task-Specific Author	CB&I	865-560-7799	865-560-7956	ray.clark@cbifederalservices.com

Notes:
Copies of this CMIP Data Collection Quality Assurance Plan will be distributed to the individuals above.
The addresses for the personnel identified on this list can be found on the following link:
https://shawxnet.shawgrp.com/sites/redstone/Shared%20Documents/Forms/AllItems.aspx?RootFolder=%2fsites%2fredstone%2fShared%20Documents%2fDocument%20Distribution%20List&FolderCTID=&View=%7b8A14A2B1%2d6A9D%2d485C%2d803E%2d6A999FABC56E%7d

One controlled hard copy of the IW work plan will be maintained in the field trailer as a reference for field workers. The field team members are required to be familiar with their applicable contents through required reading and the sign-off acknowledgement sheet. The CB&I Quality Control Site Manager will be the owner of the field copy of the IW work plan and will be responsible to ensure that it is current and that all field sampling personnel have read the work controlling documents and have signed the acknowledgement form. A copy of the IW guidance document will be maintained as a reference document in the possession of the field sampling team during the sampling event.

Worksheet No. 4 Project Personnel Sign-Off Sheet

Project Personnel	Title	Telephone Number	Signature	Date CMIP Read
Art Holcomb	CB&I Task Order 0008 PM	256-213-2192		
Vicki Graves	CB&I Program Chemist	865-560-7818		
Emily Davis	CB&I Sr. Scientist	717-737-1049		
David W. Marcum	CB&I Project QA/QC Manager	256-213-2193		
Brian Rhodes	CB&I Program Regulatory/Waste Specialist	256-213-2202		
Allen Bradley	Group 3 Cost Account Manager	865-560-7793		
Martha Adams	Group 3 Technical Manager	619-446-4521		
Ray Clark	Task-Specific Author	865-560-7799		
Field Personnel	CB&I Field Personnel	256-213-2200		

The individuals who sign above are certifying they have read the applicable sections of the RSA IW QAPP and the SFSP. Upon completion, please forward the original signed form, with all columns completed, to CB&I Federal Services LLC, c/o David W. Marcum, 7471 Maple Road, Huntsville, AL 35898 or forward an electronic version via email to dave.marcum@cbifederalservices.com for the project files.

Worksheet No. 14 Summary of Project Tasks

The data collection activities conducted at RSA-227 will be completed in accordance with the standard operating project procedures (SOPP), the corrective measures implementation (CMI) work plan, and the installation-wide (IW) quality assurance program plan (QAPP) for the Program Management Contract (Shaw Environmental & Infrastructure, Inc. [Shaw], 2013). Data collection for this CMI will be conducted for the following activities:

- Soil confirmation sampling following the soil excavation
- Borrow source sampling prior to placement in the excavation
- Investigation-derived waste (IDW)/remediation-derived waste (RDW) characterization.

Quality assurance/quality control (QC) samples will be collected as presented in Worksheet No. 20, *Field Quality Control Sample Summary.*

The following sections present a brief description of each data collection task and present the work controlling documents that provide guidance for proper data collection implementation. All data collection activities will be conducted in a manner that ensures the quality of the data is sufficient to meet the objectives identified in the CMI work plan.

14.1 Soil Confirmation Samples

Following completion of the soil excavations, confirmation soil samples will be collected within the RSA-227 excavation areas to ensure that the soil contaminant concentrations remaining at the site do not exceed specified cleanup goals for arsenic and polynuclear aromatic hydrocarbons (PAH). The sampling activities will include soil sampling along the perimeter sidewalls and floors in all excavation areas (as required in Section 4.6). The confirmation samples will be collected as composite samples for arsenic and PAHs. The soil sampling will be conducted in accordance with SOPP No. 5.0, *Surface Soil Sampling*, and SOPP No. 6.0, *Subsurface Soil Sampling* (Shaw, 2013). The soil samples will be field screened using a photoionization detector for health and safety purposes in accordance with SOPP 2.0, *Collection and Field Screening of Soil Samples* (Shaw, 2013). The data collection and analytical program are presented in Worksheets No. 18 and No. 20 of this data collection quality assurance plan (DCQAP), respectively.

Contaminated soils that are stockpiled during excavation activities at the site will be divided into individual stockpiles of up to 200-cubic yard volumes and sampled in accordance with Section 4.8 of the CMI work plan. Worksheets No. 18 and No. 20 in this DCQAP specify the required sampling and analytical suite.

Worksheet No. 14 Summary of Project Tasks

14.2 Borrow Source Samples

Clean soil for the fill material will be laboratory tested prior to placement. If sampling of the on-site borrow source material has not been conducted, sampling will be conducted to confirm that it is acceptable for use at the site. Samples will be tested for chemical contamination using the following U.S. Environmental Protection Agency (EPA) methods:

- EPA Method 6010C for metals
- EPA Method 8270D for semivolatile organic compounds
- EPA Method 8260B for volatile organic compounds
- EPA Method 8081B for pesticides
- EPA Method 8082A for polychlorinated biphenyls.

Borrow samples will be collected in accordance with SOPP No. 5.0, *Surface Soil Sampling* (Shaw, 2013) and as detailed in Section 4.10 of the RSA-227 CMI Work Plan. The sample collection and analytical methods are presented in Section 4.10 of the CMI work plan and Worksheets No. 18 and No. 20 of this DCQAP, respectively.

A borrow source assessment report detailing the results of the laboratory analyses will be issued at least 15 days prior to placement of the soils in the excavations at RSA-227.

14.3 IDW/RDW

Waste to be managed as RDW will include the contaminated soil stockpiled from the excavation at each site. Soil confirmation sampling will generate IDW. The data collection for the IDW/RDW management and analytical requirements is presented in Section 4.7 of the CMI work plan and Worksheets No. 18 and No. 20 of this DCQAP, respectively.

14.3 Equipment Decontamination

Sampling equipment decontamination will be performed to maintain the integrity of the samples collected (i.e., to ensure that contaminants will not be introduced into samples from location to location). All equipment arriving on site will undergo a thorough decontamination prior to leaving the site. All equipment will be decontaminated in accordance with the requirements specified in SOPP No. 3.0, *Field Equipment Decontamination* (Shaw, 2013). All soils and water will be containerized in accordance with SOPP No. 4.0, *Investigative Derived Waste* (Shaw, 2013), and sampled as IDW/RDW.

Worksheet No. 14 Summary of Project Tasks

14.4 Field Documentation

Field personnel are responsible for accurately documenting field activities and maintaining the records in a protective manner, safeguarding against damage or loss until submitted to the Site Supervisor or the project files. All field records are to be accurate, complete, and legible and contain sufficient detail to allow future reconstruction of the recorded event by someone other than the originator. Records may be completed electronically or manually.

Personnel completing records/forms shall observe the following minimum requirements:

- Keep all record entries concise and legible: make all entries in dark blue or black, indelible ink.
- Complete all forms in such a manner as to accurately and thoroughly document the activity.
- Use the military clock (24-hour) when recording time.
- When using a preprinted form, complete each blank or space. Mark “NA” or equivalent in each space that is not applicable to activity.
- Make any corrections or deletions required by drawing a single line throughout the entry and initialing and dating the correction.
- Do not use correction fluid/tape or erasers.

Worksheet No. 29, *Project Documents and Records Table*, in the IW QAPP (Shaw, 2013) provides details on records generation, maintenance, and archival and retrieval methods.

14.5 Quality Assurance/Quality Control Sample Collection

As summarized in Worksheet No. 20, *Field Quality Control Sample Summary,* QC samples collected as part of data collection activities will include equipment rinsate samples, field duplicates, and matrix spike (MS)/matrix spike duplicate (MSD) samples to monitor decontamination procedures, sample handling procedures, laboratory precision, accuracy, and sample matrix effects. Laboratory standard operating procedures (SOP) are available in Worksheet No. 19, *Analytical SOP Requirements* (Shaw, 2013).

14.5.1 Equipment Rinsate Samples

Equipment rinsate samples are blank samples collected to determine if the decontamination process has removed residual contamination from sampling equipment. The rinsate sample will consist of ASTM International Type II reagent-grade water poured over or through decontaminated sampling equipment into the appropriate sample containers. The rinsate will be analyzed for the same analytical parameters as the environmental samples. The data obtained from the rinsate samples will be used in the data validation process. Equipment rinsate samples will be collected as needed in accordance with IW QAPP (Shaw, 2013).

Worksheet No. 14 Summary of Project Tasks

14.5.2 Field Duplicates

Field duplicates will be collected to assess the precision of the analytical process utilized in the analysis of the samples collected. The field duplicates will consist of a second sample collected at the same location as the original sample. The duplicate samples will be collected at predetermined locations and collected, handled, and transported in the same manner as the original samples. One field duplicate will be collected for every 10 regular environmental samples collected. All sampled media will include at least one field duplicate (Shaw, 2013).

14.5.3 Matrix Spike/Matrix Spike Duplicates

MS/MSD samples will be collected to assess the laboratory precision, accuracy, and sample matrix effects. The MS/MSD samples will consist of a second and third sample collected at the same location as the original sample. The samples will be collected at predetermined locations and will be collected, handled, and transported in the same manner as the original samples. One MS/MSD will be collected for every 20 regular environmental samples collected. All sampled media will include at least one MS/MSD (Shaw, 2013).

14.6 Sample Handling Procedures and Holding Times

All sample containers, handling, packaging, and shipping will be in accordance with SOPP No. 15.0, *Non-Hazardous Sample Handling, Packaging and Shipping,* in the IW QAPP (Shaw, 2013). Worksheet No. 20, *Field Quality Control Sample Summary,* provides the sample volume, sample container types, and sample frequency.

14.7 Sample Documentation Custody, Packaging, and Shipping

The field sampling team will maintain physical custody of the samples at all times prior to shipment to the analytical laboratory. Sample documentation custody, packaging, and shipping will be in accordance with SOPP No. 15.0, *Non-Hazardous Sample Handling, and Packaging and Shipping*, in the IW QAPP (Shaw, 2013). Worksheet No. 26, *Sampling Handling System,* identifies the personnel and the organizations that are responsible for sample custody, packaging and shipment.

14.8 Data Management and Validation

All analytical data generated from this project is managed in accordance with the procedures specified in the IW QAPP (Shaw, 2013). Samples collected during implementation of the sampling effort are analyzed using approved EPA SW-846 Update III Methods in accordance with the *Quality Systems Manual for Environmental Laboratories* (U.S. Department of Defense, 2013) and laboratory SOPs. Reporting limits for the various analytes are appropriate for comparing data against the decision criteria.

Worksheet No. 14 Summary of Project Tasks

Sample data are validated by the validation team using the EPA *Contract Laboratory Program National Functional Guidelines for Superfund Organic Methods Data Review* (EPA, 2014a) and *Contract Laboratory Program National Functional Guidelines for Superfund Inorganic Data Review* (EPA, 2014b) for guidance. EPA Region 3 *Modifications to the Laboratory Data Validation Functional Guidelines for Evaluating Organic Analyses* (EPA, 1994) and *Modifications to the Laboratory Data Validation Functional Guidelines for Evaluating Inorganic Analyses* (EPA, 1993) are applied during the blank evaluation portion of the validation activities. Specific QC criteria identified in the IW QAPP (Shaw, 2013), analytical methods, and laboratory SOPs will be applied to all sample results. For those analytical methods not addressed by the validation guidelines, the evaluation is based on the published method requirements, laboratory-specific SOPs, and technical judgment following the logic of the Contract Laboratory Program validation guidelines for data qualification.

14.9 Inspections for Field Activities

Inspections are performed on materials or services to determine compliance with contractual, planning, and other requirements. Inspection criteria are established prior to the inspection and are based upon project specifications, requirements, code specifications, and product acceptability. Acceptance criteria shall be adequate for the activity and be verified during inspection activities. Inspection may be performed and verified through visual observation, measurement of materials or equipment, examination of documentation/certification, evaluation of performance, or testing. Worksheet No. 31, *Planned Project Assessments Table* (Shaw, 2013), provides details on the types of inspections as well as the inspection frequency. Records of inspections are maintained in the project files. At minimum, inspection files will include inspection reports/checklists, inspection responses, any supporting documents, and applicable client comments.

Worksheet No. 18 Sampling Locations and Methods/SOPP Requirements

Sample Location	Sample Designation	Depth (ft bgs) (a)	QA/QC Sample Designation		Analytical Suite
			FD*	MS/MSD*	
RSA-227 Confirmation Sample Excavation Washrack - Area A					
227-ExAW01	227-ExAW01 -DS- AEM0096 -REG	0-2			TAL Metals, LL PAHs
227-ExAW02	227-ExAW02 -DS- AEM0097 -REG	0-2	227-ExAW02-DS-AEM0098-FD		TAL Metals, LL PAHs
227-ExAW03	227-ExAW03 -DS- AEM0099 -REG	0-2		227-ExAW03-DS-AEM0099-MS/MSD	TAL Metals, LL PAHs
227-ExAF04	227-ExAF04 -DS- AEM0100 -REG	2-3			TAL Metals, LL PAHs
RSA-227 Confirmation Sample Excavation Sump - Area B					
227-ExBW01	227-ExBW01 -DS- AEM0101 -REG	0-5			TAL Metals, LL PAHs
227-ExBW02	227-ExBW02 -DS- AEM0102 -REG	0-5	227-ExBW02-DS-AEM0103-FD		TAL Metals, LL PAHs
227-ExBW03	227-ExBW03 -DS- AEM0104 -REG	0-5		227-ExBW03-DS-AEM0104-MS/MSD	TAL Metals, LL PAHs
227-ExBW04	227-ExBW04 -DS- AEM0105 -REG	0-5			TAL Metals, LL PAHs
227-ExBF05	227-ExBF05 -DS- AEM0106 -REG	5-6			TAL Metals, LL PAHs
RSA-227 Confirmation Sample Excavation Area C					
227-ExCW01	227-ExCW01 -DS- AEM0107 -REG	0-2			TAL Metals, LL PAHs
227-ExCW02	227-ExCW02 -DS- AEM0108 -REG	0-2	227-ExCW02-DS-AEM0109-FD		TAL Metals, LL PAHs
227-ExCW03	227-ExCW03 -DS- AEM0110 -REG	0-2		227-ExCW03-DS-AEM0110-MS/MSD	TAL Metals, LL PAHs
227-ExCF04	227-ExCF04 -DS- AEM0111 -REG	2-3			TAL Metals, LL PAHs
RSA-227 Confirmation Sample Excavation West Ditch - Area D					
227-ExDW01	227-ExDW01 -DS- AEM0112 -REG	0-2			TAL Metals, LL PAHs
227-ExDW02	227-ExDW02 -DS- AEM0113 -REG	0-2			TAL Metals, LL PAHs
227-ExDW03	227-ExDW03 -DS- AEM0114 -REG	0-2	227-ExDW03-DS-AEM0115-FD		TAL Metals, LL PAHs
227-ExDW04	227-ExDW04 -DS- AEM0116 -REG	0-2		227-ExDW04-DS-AEM0116-MS/MSD	TAL Metals, LL PAHs
227-ExDF05	227-ExDF05 -DS- AEM0117 -REG	2-3			TAL Metals, LL PAHs
RSA-227 Confirmation Sample Excavation South Ditch - Area E					
227-ExEW01	227-ExEW01 -DS- AEM0118 -REG	0-2			TAL Metals, LL PAHs
227-ExEW02	227-ExEW02 -DS- AEM0119 -REG	0-2	227-ExEW02-DS-AEM0120-FD		TAL Metals, LL PAHs
227-ExEW03	227-ExEW03 -DS- AEM0121 -REG	0-2		227-ExEW03-DS-AEM0121-MS/MSD	TAL Metals, LL PAHs
227-ExEW04	227-ExEW04 -DS- AEM0122 -REG	0-2			TAL Metals, LL PAHs
227-ExEF05	227-ExEF05 -DS- AEM0123 -REG	2-3			TAL Metals, LL PAHs
RSA-227 Clean Soil Borrow Sample Location					
227-BORROW	227-BORROW -DS- AEM9021 -REG	NA			TCL VOCs, TCL SVOCs, TCL Pesticides/PCBs, TAL Metals
RSA-227 IDW Water Samples					
227-SITE	227-SITE -WA- AEM9022 -REG	NA			TAL Metals
RSA-227 IDW Soil Samples					
227-SITE	227-SITE -SO- AEM9023 -REG	NA			TCLP Arsenic

(a). Sidewall soil (W) and excavation floor soil (F) samples will be composited per ADEM guidance.
*The MS/MSD locations are subject to change due to field conditions. Project chemist will be notified and database updated accordingly.

Sampling SOP Reference

SOPP 1.0, Field Documentation; SOPP 2.0, Collection and Field Screening of Soil Samples; SOPP 3.0, Field Equipment Decontamination.
SOPP 4.0, Investigative Derived Waste, SOPP 6.0, Subsurface Soil Sampling.
SOPP 15.0, Non-Hazardous Sample Handling, Packaging, and Shipping; SOPP 22.0, Description of Geologic Materials.

Worksheet No. 20 Field Quality Control Sample Summary

	Analytical Method	Matrix	Total Number of Samples	FD	MS	MSD	Equip. Rinsate (1/event)	Trip Blank (1/cooler)	TAT Needed[a]	Sample Container/Preservation Requirements[b]	Holding Time	Total Number of Containers
RSA-227 Samples												
Soil Confirmation Samples Excavation Washrack - Area A												
TAL Metals	3050B/6010C/7471A	Soil	4	1	1	1	1	0	5 Days	4-oz jar	6 Months; Mercury - 28 days	8
LL PAHs	3540C/8270D	Soil	4	1	1	1	1	0	5 Days	4-oz jar	14 days extraction; 40 days analysis	8
Soil Confirmation Samples Excavation Sump - Area B												
TAL Metals	3050B/6010C/7471A	Soil	5	1	1	1	1	0	5 Days	4-oz jar	6 Months; Mercury - 28 days	9
LL PAHs	3540C/8270D	Soil	5	1	1	1	1	0	5 Days	4-oz jar	14 days extraction; 40 days analysis	9
Soil Confirmation Samples Excavation Area C												
TAL Metals	3050B/6010C/7471A	Soil	4	1	1	1	1	0	5 Days	4-oz jar	6 Months; Mercury - 28 days	8
LL PAHs	3540C/8270D	Soil	4	1	1	1	1	0	5 Days	4-oz jar	14 days extraction; 40 days analysis	8
Soil Confirmation Samples Excavation West Ditch - Area D												
TAL Metals	3050B/6010C/7471A	Soil	5	1	1	1	1	0	5 Days	4-oz jar	6 Months; Mercury - 28 days	9
LL PAHs	3540C/8270D	Soil	5	1	1	1	1	0	5 Days	4-oz jar	14 days extraction; 40 days analysis	9
Soil Confirmation Samples Excavation South Ditch - Area E												
TAL Metals	3050B/6010C/7471A	Soil	5	1	1	1	1	0	5 Days	4-oz jar	6 Months; Mercury - 28 days	9
LL PAHs	3540C/8270D	Soil	5	1	1	1	1	0	5 Days	4-oz jar	14 days extraction; 40 days analysis	9
Clean Borrow Soil Sample												
TCL VOCs	5035/8260B	Soil	1	0	0	0	0	0	5 Days	3 Terra Cores in Methanol/sodium bisulfate	14 days	3
TCL SVOCs	3540C/8270D	Soil	1	0	0	0	0	0	5 Days	4-oz jar	14 days extraction; 40 days analysis	1
TCL Pesticides	3540C/8081B	Soil	1	0	0	0	0	0	5 Days	4-oz jar	14 days extraction; 40 days analysis	1
TCL PCBs	3540C/8082A	Soil	1	0	0	0	0	0	5 Days	4-oz jar	14 days extraction; 40 days analysis	1
TAL Metals	3050B/6010C/7471A	Soil	1	0	0	0	0	0	5 Days	4-oz jar	6 Months; Mercury - 28 days	1
IDW Water												
TAL Metals	3005A/6010B/7470A	Water	1	0	0	0	0	0	Normal	1 x 250 ml HPDE HNO_3 to pH<2	6 months; Mercury - 28 days	1
IDW Soils												
TCLP Arsenic	1311/3005A/ 6010C	Soil	1	0	0	0	0	0	Normal	4-oz jar	6 months from collection to extraction/6 months from extraction to analysis; Mercury - 28 days	1

[a] Sample deliverables should include a Level IV, CLP-like data package and EDD for all samples with the exception of IDW samples that require certificates of analysis and EDD only.

[b] All samples should be cooled to 4 degrees Celsius in conjunction with preservation requirements noted prior to shipment to the laboratory.

Worksheet No. 26 Sample Handling System

SAMPLE COLLECTION, PACKAGING, AND SHIPMENT (FIELD)
Sample Collection (Personnel/Organization): Wally Cooper or designee/CB&I
Sample Packaging (Personnel/Organization): Brian Rhodes or designee/CB&I
Coordination of Shipment (Personnel/Organization): Vicki Graves or designee/CB&I
Type of Shipment/Carrier: Cooler/Lab Courier, UPS
SAMPLE RECEIPT AND ANALYSIS
Sample Receipt (Personnel/Organization): Sample Custodians/Empirical Laboratory, LLC
Sample Custody and Storage (Personnel/Organization): Sample Custodians/Empirical Laboratory, LLC
Sample Preparation (Personnel/Organization): Extraction Lab, Metals Preparation Lab/Empirical Laboratory, LLC
Sample Determinative Analysis (Personnel/Organization): GC/Liquid Chromatography Lab, GC/MS Lab, Metals Preparation Lab/Empirical Laboratory, LLC
SAMPLE ARCHIVING
Field Sample Storage (No. of days from sample collection): 60 days from receipt
Sample Extract/Digestate Storage (No. of days from extraction/digestion): 3 months from sample extraction/ digestion
Biological Sample Storage (No. of days from sample collection): NA
SAMPLE DISPOSAL
Personnel/Organization: Sample Custodians/ Empirical Laboratory, LLC
Number of Days from Analysis: 30 days from submittal of final report or 60 days from receipt, whichever is longer

Post sample collection in the field will be conducted in accordance with SOPP 15.0 *Non-Hazardous Sample Handling, Packaging, and Shipping.* This procedure is located in the RSA IW QAPP, Volume II (Shaw, 2013).

Specific laboratory sample custody procedures (receipt of samples, archiving, and disposal) will be used for all post-sample handling. Coolers will be received and checked for proper temperature. A sample cooler receipt form will be filled out to note the conditions and any discrepancies. The chain of custody will be checked against the sample containers for correctness. Samples will be logged into the data base and given a unique log number, which can be tracked through processing. The Project Chemist will be notified of any problems.

APPENDIX F

BEST MANAGEMENT PRACTICES

Appendix F

Alabama Best Management Practices
RSA-227, Inactive Washrack Adjacent to Building 5492
Operable Unit 6
U.S. Army Garrison-Redstone
Madison County, Alabama
U.S. EPA ID No. AL7 210 020 742

U.S. Army Garrison-Redstone
Madison County, Alabama

Prepared for:

Mission & Installation Contracting Command
ATTN: MICC Center – FSH
2107 17th Street
Building 4197, Suite 15
Fort Sam Houston, Texas 78234-5015

Prepared by:

CB&I Federal Servics LLC
2410 Cherahala Boulevard
Knoxville, Tennessee 37932

Task Order 0008
Contract Number W91ZLK-09-D-0006
CB&I Project No. 147104

March 2016

Reference:

Alabama Handbook for Erosion Control, Sediment Control and Stormwater Management on Construction Sites and Urban Areas. September 2014.

Site Preparation

A. Construction Exit Pad (CEP)

B. Land Grading (LG)

Surface Stabilization

C. Permanent Seeding (PS)

D. Temporary Seeding (TS)

Runoff Conveyance

E. Check Dam (CD)

F. Diversion (DV)

G. Grass Swale (GS)

Sediment Control

H. Sediment Barrier (SB)

A. Construction Exit Pad (CEP)

Construction Exit Pad (CEP)

Practice Description

A construction pad is a stone base pad designed to provide a buffer area where mud and caked soil can be removed from the tires of construction vehicles to avoid transporting it onto public roads. This practice applies anywhere traffic will be leaving a construction site and moving directly onto a public road or street.

Planning Considerations

Roads and streets adjacent to construction sites should be kept clean for the general safety and welfare of the public. A construction exit pad (Figure CEP-1) should be provided where mud can be removed from construction vehicle tires before they enter a public road.

Where possible the construction exit pad should be located and constructed at a site where surface runoff from the pad will not transport sediment from the pad off the site. If the pad slope toward the road exceeds 2%, a diversion ridge 6” to 8” high with 3:1 side slopes should be constructed across the foundation approximately 15 feet from the entrance. This diversion ridge should divert surface runoff from the pad away from the road and into a sediment trap or basin.

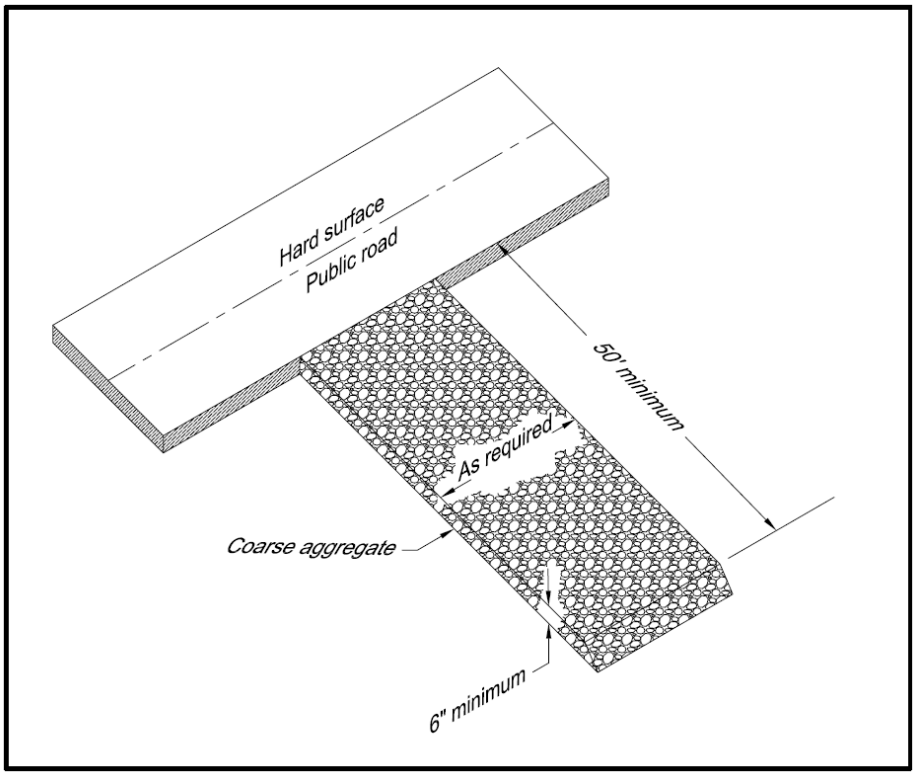

Figure CEP-1 Gravel Construction Exit

If the action of the vehicle traveling over the gravel pad does not sufficiently remove the mud or if the site is in a particularly sensitive area, a washing facility should be included with the pad (Figure CEP-2). When a washing facility is required all wash water shall be diverted to a sediment trap or basin.

If the construction exit pad is located in an area with soils that will not support traffic when wet, an underliner of geotextile will be required to provide stability to the pad.

Construction of stabilized roads throughout the development site should be considered to lessen the amount of mud transported by vehicular traffic. The construction exit pad should be located to provide for maximum use by construction vehicles.

Consideration should be given to limiting construction vehicles to only one ingress and egress point. Measures may be necessary to make existing traffic use the construction exit pad.

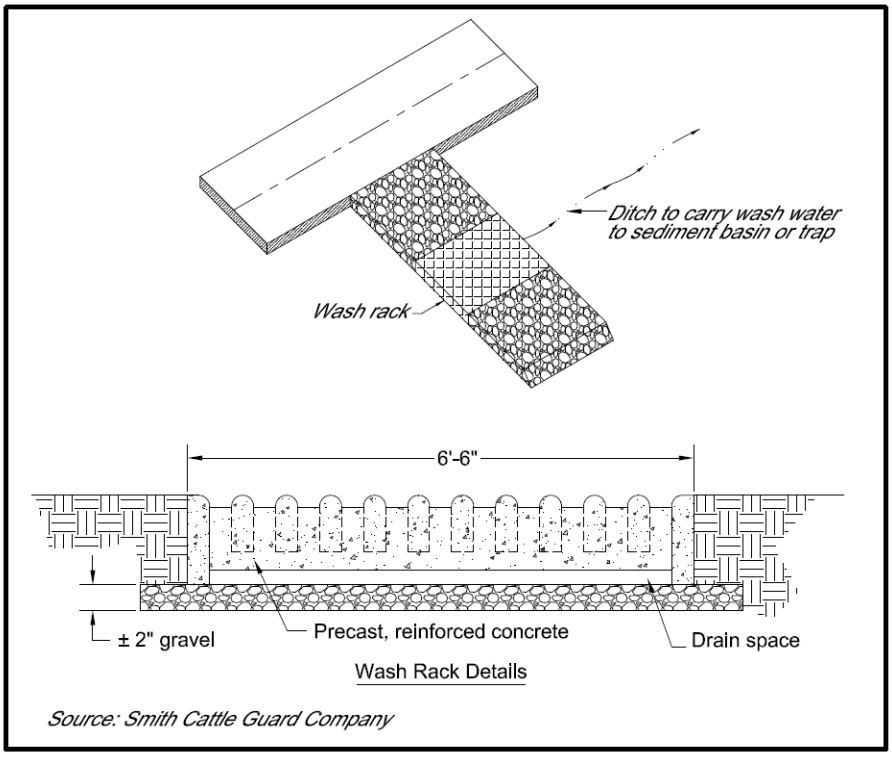

Figure CEP-2 Construction Exit with Wash Rack

Design Criteria

Aggregate size

Aggregate should be Alabama Highway Department coarse aggregate gradation No.1.

Pad Thickness

The exit pad shall have a minimum aggregate thickness of 6”.

Geotextiles

A non-woven geotextile shall be placed underneath the aggregate. The geotextile shall be of the strength and durability required for the project to ensure the aggregate and soil base are stable. Generally, the non-woven geotextile should meet the requirements found in ASSHTO M288.

Pad Length

The exit pad should provide for entering and parking the longest anticipated construction vehicles. A pad is typically 50 feet long but the required length may be longer or shorter.

Pad Width

The exit pad width is typically 20 feet but may be narrower or wider to equal the full width of the vehicular egress.

Washing

A washing facility shall be provided if necessary to prevent mud and caked soil from being transported to public streets and highways. It shall be constructed of concrete, stone, and/or other durable materials. Provisions shall be provided for the mud and other material to be carried away from the washing facility to a sediment trap or basin to allow for settlement of the sediment from the runoff before it is released from the site.

B. Land Grading (LG)

Land Grading (LG)

Practice Description

Land grading is reshaping of the ground surface to provide suitable topography for buildings, facilities and other land uses, to control surface runoff, and to minimize soil erosion and sedimentation both during and after construction. This practice applies to sites where the existing topography must be modified to prepare for another land use, or where adapting proposed development to the existing landscape can reduce the erosion potential of the site and the cost of installing erosion and sediment control measures. In some instances other practices such as diversions or benches can be used to reduce the length of continuous slopes and reduce erosion potential.

Planning Considerations

A detailed plan should be developed by a qualified design professional for all land grading activities at the project site. The plan should show all areas to be disturbed, the areas of cut, areas of fill, and the finished elevation for all graded areas. Areas that will be mowed after the site is developed should have slopes planned that are not too steep for the type of mowing equipment that will be used for regular maintenance.

The grading plan should be designed to protect existing vegetation where possible, especially around natural drainageways. Grading activities should be scheduled to minimize the area disturbed at any one time during the construction process. The plan should include provisions for stabilizing disturbed areas immediately after final grading is completed. Provisions should also be made to

protect existing underground utilities. Finally, topsoil should be removed and stockpiled for use in revegetating the site.

The grading plan should also include necessary practices for controlling sediment and erosion at the site. These practices could include stable outlets and slope breaks such as diversions or benches.

Design Criteria

Site Preparation

A detailed survey of the construction site should be performed by a qualified surveyor prior to grading plan development. This survey should include existing topographic information at the site including existing elevations, existing drainage patterns, locations of existing overhead and underground utilities, and construction limit boundaries.

The grading plan should require that the existing topsoil at sites to be graded be removed as the first step in the grading process. The plan should include a location on the construction site where topsoil will be stockpiled. Stockpiled topsoil should be protected by temporary vegetation (see Temporary Vegetation practice) or other appropriate temporary cover, such as plastic, until it is used to cover disturbed areas in advance of permanent vegetation of the site.

The grading plan should include a schedule of disturbance activities that minimizes the area disturbed at any point in time using sequencing and staging concepts. In areas where clearing of existing vegetation is planned, the area should be cleared and grubbed by removing trees, vegetation, roots and other debris such as trash. In areas to be filled all loose or weak soil and oversized rocks should be removed from the area. The foundation of the area to be filled should consist of soil or rock material of adequate strength to support the proposed fill material and the structures to be built at the site. The exact depth of material to be removed should be determined by a qualified geotechnical professional according to accepted engineering standards.

Grading

A plan for placement of fill should be developed by a qualified geotechnical professional. The plan should specify the source of fill materials, which should be obtained on site if possible. Materials used for fill, when placed according to the plans and specifications, should provide sufficient strength to support structures planned for construction at the location.

Loose fill material should be placed in layers not exceeding 9” in thickness. The materials should be compacted to a moisture content and to a dry density that will produce the design bearing strength required for structures planned at the site. A qualified geotechnical engineer should provide fill placement specifications using standard accepted engineering practices.
Long and/or steep slope lengths can result in rill and gully erosion on slopes. Erosion on these type slopes can be minimized by breaking the slope with

diversions or benches (see Diversion practice). Diversion widths should be compatible with the expected maintenance equipment. Care is needed in locating outlets that will be stable and not cause gully erosion. The following table gives general guidance on the horizontal spacing of slope breaks:

Table LG-1 Guidelines for Spacing Slope Breaks [1]

Slope (H:V)	Horizontal Spacing (Ft)
1:1	20
2:1	40
3:1	60
4:1 and 5:1	80
6:1 to 9:1	120
10:1 or flatter	200

[1] Adjustments in spacing may be made to account for soil and site conditions and professional experience of the site designer.

In areas where seepage and ground water are present subsurface drains should be installed to improve slope stability or soil bearing capacity (see Subsurface Drain practice).

Steep slopes should be avoided if possible. Slopes that are to be vegetated should be 2 horizontal to 1 vertical or flatter. If the slope is to be maintained by tractor or other equipment the slope should be 3 horizontal to 1 vertical or flatter. Slopes should be designed to blend with surrounding topography as much as possible.

Erosion Control

The grading plan should include provisions for stabilization of graded areas immediately after final grading is completed. On areas that will have no additional disturbance, permanent vegetation should be applied immediately to the site (see Permanent Seeding practice) if grading is finished during the planting season. If grading is finished outside of the recommended planting dates a temporary cover should be installed using a Temporary Seeding or other appropriate cover and the Permanent Seeding planned for the next planting period. On areas where work is to be interrupted or delayed for 14 calendar days or longer, such as topsoil stockpiles, the area should be stabilized using mulch or temporary seeding (see Mulching or Temporary Seeding practice). Other stabilization measures such as hydraulic mulch or erosion control blankets should be used in extreme conditions, such as steep slopes and channels.

Where practical, runoff from undisturbed off-site areas should be diverted around the construction site to prevent erosion on the disturbed areas (see Diversion practice).

Sediment Control

Required sediment control practices should be installed before the land disturbance activities in the drainage area of the sediment control practices. Until

disturbed areas can be stabilized, appropriate sediment control measures will be maintained to minimize sediment delivery off-site. Measures should include as a minimum:

- Sediment Barriers – Placed along toes of slopes (see Sediment Barrier practice).
- Sediment Basins – Divert sediment laden runoff to basins as needed to minimize off-site sedimentation (see Sediment Basin practice).
- Inlet Protection – Where sediment-laden runoff is diverted to on-site stormwater drain inlets, the inlets should be protected with an appropriate sediment control practice.
- Stabilized Outlets – All runoff from the site should be conveyed in stabilized channels (see Grassed Swale, Lined Swale, Rip-rap Lined Swale, or other appropriate channel stabilization).

C. Permanent Seeding (PS)

Permanent Seeding (PS)

Practice Description

Permanent seeding is the establishment of perennial vegetation on disturbed areas from seed. Permanent vegetation provides economical long-term erosion control and helps prevent sediment from leaving the site. This practice is used when vegetation is desired and appropriate to permanently stabilize the soil.

Planning Considerations

The advantages of seeding over other means of establishing plants include the smaller initial cost, lower labor input, and greater flexibility of method.

Disadvantages of seeding include potential for erosion during the establishment stage, seasonal limitations on suitable seeding dates, and weather-related problems such as droughts.

The probability of successful plant establishment can be maximized through good planning. The selection of plants for permanent vegetation must be site specific. Factors that should be considered are type of soils, climate, establishment rate, and management requirements of the vegetation. Other factors that may be important are wear, mowing tolerance, and salt tolerance of vegetation.

Plant selection for permanent vegetation should be based on plant characteristics, site and soil conditions, time of year of planting, method of planting, and the intended use of the vegetated area. Climate factors can vary widely in Alabama.

Important plant attributes are discussed in Vegetation Establishment for Erosion and Sediment Control in Chapter 2.

Plant selection may include companion plants to provide quick cover on difficult sites, late seedings, or where the desired permanent cover may be slow to establish. Annuals are usually used for companion plants and should be selected carefully to prevent using a species that provide so much competition that it prevents the establishment of the desired species.

Seeding properly carried out within the optimum dates has a higher probability of success. It is also possible to have satisfactory establishment when seeding outside these dates. However, as plantings are deviated from the optimum dates, the probability of failure increases rapidly. Seeding dates should be taken into account in scheduling land-disturbing activities.

Site quality impacts both short-term and long-term plant success. Sites that have compacted soils, soils that are shallow to rock or have textures that are too clayey or too sandy should be modified whenever practical to improve the potential for plant growth and long-term cover success.

The operation of equipment is restricted on slopes steeper than 3:1, severely limiting the quality of the seedbed that can be prepared. Provisions for establishment of vegetation on steep slopes can be made during final grading. In construction of fill slopes, for example, the last 4-6” might not be compacted. A loose, rough seedbed with irregularities that hold seeds and lime and fertilizer is essential for hydroseeding. Cut slopes should be roughened (see Land Grading practice).

Proper mulching is critical to protect against erosion on steep slopes. When using straw, anchor with netting or asphalt. On slopes steeper than 2:1, jute, excelsior, or synthetic matting may be required.

The use of irrigation (temporary or permanent) will greatly improve the success of vegetation establishment.

Design Criteria

Plant Selection

Select plants that can be expected to meet planting objectives. To simplify plant selection, use Figure PS-1 Geographical Areas for Species Adaptation and Seeding Dates and Table PS-1, Commonly Used Plants for Permanent Cover. Mixtures commonly specified by the Alabama Department of Transportation are an appropriate alternative for plantings on rights-of-ways. Additional information related to plants commonly used in Alabama is found in Chapter 2 under the section Vegetation for Erosion and Sediment Control.

The plants used for temporary vegetation may be used for companion plants provided the seeding rate of the annual species is reduced by one half. See the Temporary Seeding practice for additional information on establishing temporary

vegetation. **Ryegrass or other highly competitive plants should not be used as a companion plant**.

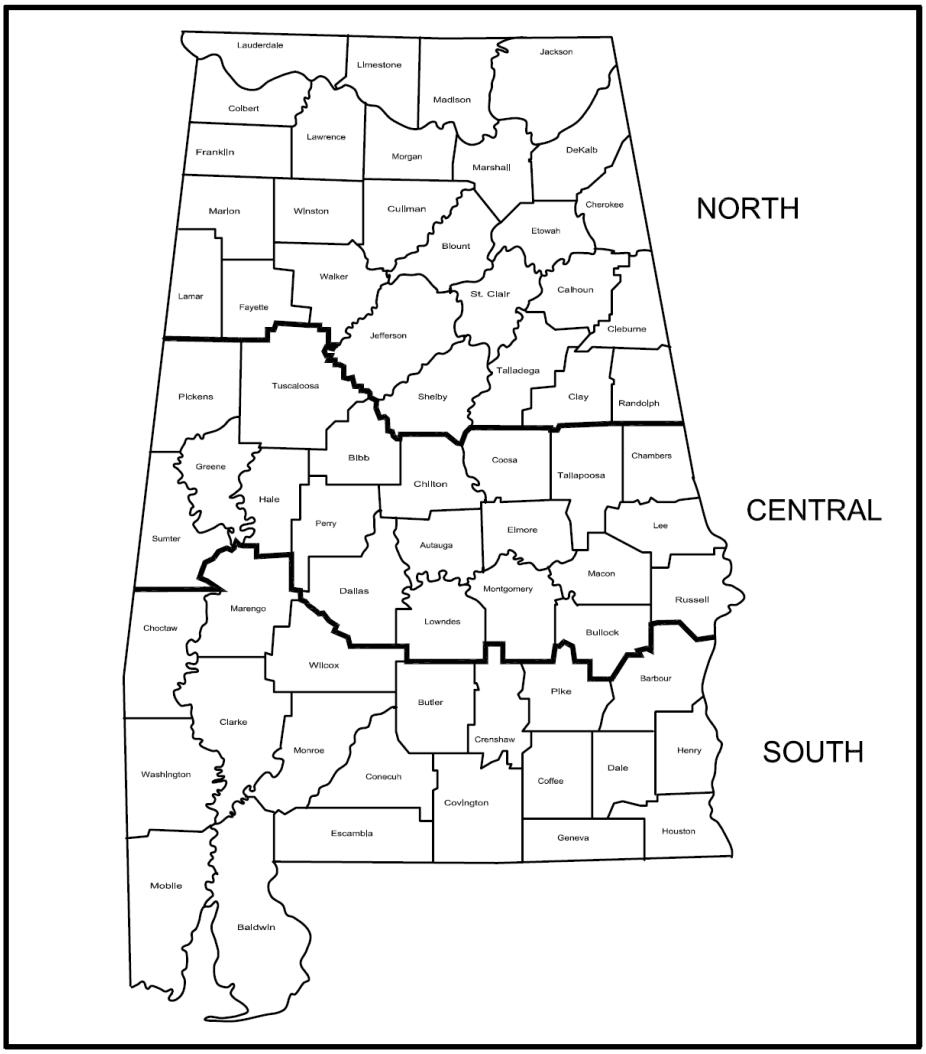

Figure PS-1 Geographical Areas for Species Adaptation and Seeding Dates

Note: Site conditions related to soils and aspect in counties adjacent to or close to county boundaries may justify adjustments in planting dates by qualified design professionals.

Table PS-1 Commonly Used Plants for Permanent Cover with Seeding Rates and Dates

Species	Seeding Rates/Ac PLS	North	Central	South
			Seeding Dates	
Bahiagrass, Pensacola	40 lbs	--	Mar 1-July 1	Feb 1-Nov 1
Bermudagrass, Common	10 lbs	Apr 1-July 1	Mar 15-July 15	Mar 1-July 15
Bahiagrass, Pensacola Bermudagrass, Common	30 lbs 5 lbs	--	Mar 1-July 1	Mar 1-July 15
Bermudagrass, Hybrid (Lawn Types)	Solid Sod	Anytime	Anytime	Anytime
Bermudagrass, Hybrid (Lawn Types)	Sprigs 1/sq ft	Mar 1-Aug 1	Mar 1-Aug 1	Feb 15-Sep 1
Fescue, Tall	40-50 lbs	Sep 1-Nov 1	Sep 1-Nov 1	--
Sericea	40-60 lbs	Mar 15-July 15	Mar 1-July 15	Feb 15-July 15
Sericea & Common Bermudagrass	40lbs 10 lbs	Mar 15-July 15	Mar 1-July 15	Feb 15-July 15
Switchgrass, Alamo	4 Lbs	Apr 1-Jun 15	Mar 15-Jun 15	Mar 15-Jun15

PLS means pure live seed and is used to adjust seeding rates. For example, to plant 10 lbs PLS of a species with germination of 80% and purity of 90%, PLS= 0.8X 0.9 = 72%. 10 lbs PLS = 10/0.72 = 13.9 lbs of the species to be planted.

Seedbed Requirements

Establishment of vegetation should not be attempted on sites that are unsuitable due to compaction or inappropriate soil texture, poor drainage, concentrated overland flow, or steepness of slope until measures have been completed to correct these problems. To maintain a good stand of vegetation, the soil must meet certain minimum requirements as a growth medium. A good growth medium should have these attributes:

- Sufficient pore space to permit root penetration.
- Enough fine-grained soil material (silt and clay) to maintain adequate moisture and nutrient supply.
- Sufficient depth of soil to provide an adequate root zone. The depth to rock or impermeable layers such as hardpans should be 12” or more, except on slopes steeper than 2:1 where topsoiling is not feasible.
- A favorable pH range for plant growth, usually 6.0-6.5.

- Sufficient nutrients (nitrogen, phosphorus and potassium) for initial plant establishment.

- Freedom from large roots, branches, stones, or large clods. Clods and stones may be left on slopes steeper than 3:1 if they are to be hydroseeded.

If any of the above attributes are not met: i.e., if the existing soil is too dense, coarse, shallow or acidic to foster vegetation – chiseling, topsoil, or special amendments should be used to improve soil conditions. The soil conditioners described below may be beneficial or topsoil may be applied (for guidance on topsoiling see Topsoiling practice). These amendments should only be necessary where soils have limitations that make them poor for plant growth or for turf establishment.

- Peat-appropriate types are sphagnum moss peat, reed-sedge peat, or peat humus, all from fresh-water sources. Peat should be shredded and conditioned in storage piles for at least 6 months after excavation.

- Sand-should be clean and free of toxic materials.

- Vermiculite-use horticultural grade.

- Rotted manure-use stable or cattle manure not containing undue amounts of straw or other bedding materials.

- Thoroughly rotted sawdust-should be free of stones and debris. Add 6 lbs of nitrogen to each cubic yard.

Soil Amendments

Liming Materials

Lime (Agricultural limestone) should have a neutralizing value of not less than 90 percent calcium carbonate equivalent and 90 percent will pass through a 10 mesh sieve and 50 percent will pass through a 60 mesh sieve.

Selma chalk should have a neutralizing value of not less than 80 percent calcium carbonate equivalent and 90 percent will pass through a 10 mesh sieve.

Other liming materials that may be selected should be provided in amounts that provide equal value to the criteria listed for agricultural lime or be used in combination with agricultural limestone or Selma chalk to provide equivalent values to agricultural limestone.

Plant Nutrients

Commercial grade fertilizers that comply with current Alabama Fertilizer Laws should be used to supply nutrients required to establish vegetation.

Lime and fertilizer needs should be determined by soil tests. Soil testing is performed by the Auburn University Soil Testing Laboratory and provides recommendations based on field tests on Alabama soils. The local county Cooperative Extension Service can provide information on obtaining soil tests. Commercial laboratories that make recommendations based on soil analysis may be used.

When soil tests are not available, use the following rates for application of soil amendments.

Sandy soils: Use 1 ton/acre (exception on sandy soils – if the cover will be tall fescue and clover) use 2 tons/acre.
Clayey soils: 2 tons/acre.
(Do not apply lime to alkaline soils).

Grasses alone: Use 400 lbs/acre of 8-24-24 or the equivalent. Apply 30 lbs of additional nitrogen when grass has emerged and begun growth (approximately 0.8lbs/1000 ft^2).
Grass-legume mixtures: Use 800 to 1200 lbs/acre of 5-10-10 or the equivalent.
Legumes Alone: Use 400 to 600 lbs/acre of 0-20-20 or the equivalent.

Note: Fertilizer can be blended to meet exact fertilizer recommendations. Take soil test recommendations to local fertilizer dealer for bulk fertilizer blends. This may be more economical than bagged fertilizer.

Application of Soil Amendments

Apply lime and fertilizer evenly and incorporate into the top 6” of soil by disking, chiseling or other suitable means during seedbed preparation. Operate machinery on the contour. On sites too steep for seedbed preparation, fertilizer and lime can be applied with a hydroseeder.

Seedbed Preparation

If needed, grade and shape to provide a surface on which equipment can safely and efficiently be used for seedbed preparation and seeding.

Install necessary sediment control practices before seedbed preparation and complete grading according to the approved plan.

Prepare a friable seedbed with tillage to a depth of at least 6”. Break up large clods, alleviate compaction, and smooth and firm the soil into a uniform surface. Fill in or level depressions that can collect water.

Planting Methods

Seeding

Use certified seed for permanent seeding whenever possible. Certified seed is inspected by the Alabama Crop Improvement Association to meet high quality standards and will be tagged with a “Certified Seed” tag. (Note: all seed sold in

Alabama is required by law to be tagged to identify seed purity, germination, and presence of weed seeds. Seed must meet state standards for content of noxious weeds.)

Seeding dates are determined using Figure PS-1 and Table PS-1.

Inoculate legume seed with the Rhizobium bacteria appropriate to the species of legume. Details of legume inoculation are located in Chapter 2 in the part on Vegetation for Erosion and Sediment Control under Inoculation of Legumes.

Plant seed uniformly with a cyclone seeder, a drill seeder, a cultipacker seeder, or by hand on a fresh, firm, friable seedbed. If the seedbed has been sealed by rainfall, it should be disked so the seed will be sown into a freshly prepared seedbed.

When using broadcast-seeding methods, subdivide the area into workable sections and determine the amount of seed needed for each section. Apply one-half the seed while moving back and forth across the area, making a uniform pattern; then apply the second half in the same way, but moving at right angles to the first pass.

Cover broadcast seed by raking or chain dragging; then firm the surface with a roller or cultipacker to provide good seed contact. Small grains should be planted no more than 1” deep and grasses and legume seed no more than ½” deep.

Hydroseeding

Surface roughening is particularly important when hydroseeding, as a roughened slope will provide some natural coverage for lime, fertilizer, and seed. The surface should not be compacted or smooth. Fine seedbed preparation is not necessary for hydroseeding operations; large clods, stones, and irregularities provide cavities in which seeds can lodge.

Mix seed, inoculant if required, and a seed carrier with water and apply as a slurry uniformly over the area to be treated. The seed carrier should be a cellulose fiber, natural wood fiber or other approved fiber mulch material which is dyed an appropriate color to facilitate uniform application of seed. Use the correct legume inoculant at 4 times the recommended rate when adding inoculant to a hydroseeder slurry. The mixture should be applied within one hour after mixing to reduce damage to seed.

Fertilizer should not be mixed with the seed-inoculant mixture because fertilizer salts may damage seed and reduce germination and seedling vigor.

Fertilizer may be applied with a hydroseeder as a separate operation after seedlings are established.

Lime is not normally applied with a hydraulic seeder because it is abrasive but if necessary it can be added to the seed slurry and applied at seeding or it may be applied with the fertilizer mixture. Also lime can be blown onto steeper slopes in dry form.

Sprigging

Hybrid bermudagrass cannot be grown from seed and must be planted vegetatively. Vegetative methods of establishing common and hybrid bermudagrass, centipedegrass and zoysia include sodding, plugging and sprigging (see Sodding practice).

When sprigs are planted with a sprigging machine, furrows should be 4-6" deep and 2 feet apart. Place sprigs no farther than 2 feet apart in the row and so that at least one rooting node is in the furrow.

When broadcasting is used for sprig planting, broadcast sprigs at the specified rate (Table PS-1). Press into the top ½" to 2" of soil with a cultipacker or with a disk set nearly straight so that the sprigs are not brought back to the surface. A mulch tacking machine may be used to press sprigs into the soil.

Mulching

The use of mulch provides instant cover and helps ensure establishment of vegetation under normal conditions and is essential to seeding success under harsh site conditions (see Mulching practice). Harsh site conditions include: slopes steeper than 3:1 and adverse soils (shallow, rocky, or high in clay or sand). Areas with concentrated flow should be treated differently and require sod, a hydromulch formulated for channels or an appropriate erosion control blanket.

Irrigation

Moisture is essential for seed germination and vegetation establishment. Supplemental irrigation can be very helpful in assuring adequate stands in dry seasons or to speed development of full cover. It is a requirement for establishment of vegetation from sod and sprigs and should be used elsewhere when feasible. However, irrigation is rarely critical for low-maintenance vegetation planted at the appropriate time of the year.

Water application rates must be carefully controlled to prevent runoff. Inadequate or excessive amounts of water can be more harmful than no supplemental water.

Maintenance

Generally, a stand of vegetation cannot be determined to be fully established until soil cover has been maintained for 1 full year from planting. Inspect vegetated areas for failure and make necessary repairs and vegetate as soon as possible.

If a stand has inadequate cover, reevaluate choice of plant materials and quantities of lime and fertilizer. Re-establish the stand after seedbed preparation or over-seed the stand. Consider a temporary seeding if the time of year is not appropriate for establishment of permanent vegetation (see Temporary Seeding practice).

If vegetation fails to grow, a soil test should be made to determine if soil acidity or nutrient imbalance is responsible.

To attain complete establishment, fertilization is usually required in the second growing season. Turf grasses require annual maintenance fertilization. Use soil tests if possible or follow the guidelines given for the specific seeding mixtures.

Protect vegetation during its establishing period from traffic that will be harmful. If appropriate, use either temporary fences or barriers to protect areas that may be damaged by excessive traffic.

This Page Intentionally Left Blank

D. Temporary Seeding (TS)

Temporary Seeding (TS)

Practice Description

Temporary seeding is the establishment of fast-growing annual vegetation from seed on disturbed areas. Temporary vegetation provides economical erosion control for up to a year and reduces the amount of sediment moving off the site.

This practice applies where short-lived vegetation can be established before final grading or in a season not suitable for planting the desired permanent species. It helps prevent costly maintenance operations on other practices such as sediment basins and sediment barriers. In addition, it reduces problems of mud and dust production from bare soil surfaces during construction. Temporary or permanent seeding is necessary to protect earthen structures such as dikes, diversions, grass-lined channels and the banks and dams of sediment basins.

Planning Considerations

Temporary vegetative cover can provide significant short-term erosion and sediment reduction before establishing perennial vegetation.

Temporary vegetation will reduce the amount of maintenance associated with sediment basins.

Temporary vegetation is used to provide cover for no more than 1 year. Permanent vegetation should be established at the proper planting time for permanent vegetative cover.

Certain plants species used for temporary vegetation will produce large quantities of residue which can provide mulch for establishment of the permanent vegetation.

Proper seedbed preparation and selection of appropriate species are important with this practice. Failure to follow establishment guidelines and recommendations carefully may result in an inadequate or short-lived stand of vegetation that will not control erosion.

The selection of plants for temporary vegetation must be site specific. Factors that should be considered are type of soils, climate, establishment rate, and management requirements of the vegetation. Other factors that may be important are wear, mowing tolerance, and salt tolerance of vegetation.

Seeding properly carried out within the optimum dates has a higher probability of success. It is also possible to have satisfactory establishment when seeding outside these dates. However, as plantings are deviated from the optimum dates, the probability of failure increases rapidly. Seeding dates should be taken into account in scheduling land-disturbing activities.

Site quality impacts both short-term and long-term plant success. Sites that have compacted soils should be modified whenever practical to improve the potential for plant growth.

The operation of equipment is restricted on slopes steeper than 3:1, severely limiting the quality of the seedbed that can be prepared. Provisions for establishment of vegetation on steep slopes can be made during final grading. In construction of fill slopes, for example, the last 4-6” might not be compacted. A loose, rough seedbed with irregularities that hold seeds and fertilizer is essential for hydroseeding. Cut slopes should be roughened (see practice Land Grading).

Good mulching practices are critical to protect against erosion on steep slopes. When using straw, anchor with netting or asphalt. On slopes steeper than 2:1, either hydraulic mulch or erosion control blanket is more appropriate than straw to protect the slope.

The use of irrigation (temporary or permanent) will greatly improve the success of vegetation establishment.

Design Criteria

Plant Selection

Select plants that can be expected to meet planting objectives. To simplify plant selection, use Table TS-1, Commonly Used Plants for Temporary Cover and Figure TS-1, Geographical Areas for Species Adaptation and Seeding Dates. Seeding mixtures commonly specified by the Alabama Department of Transportation are an

appropriate alternative for plantings on rights-of-ways. Additional information related to plantings in Alabama is found in Chapter 2 in the section Non-woody Vegetation for Erosion and Sediment Control.

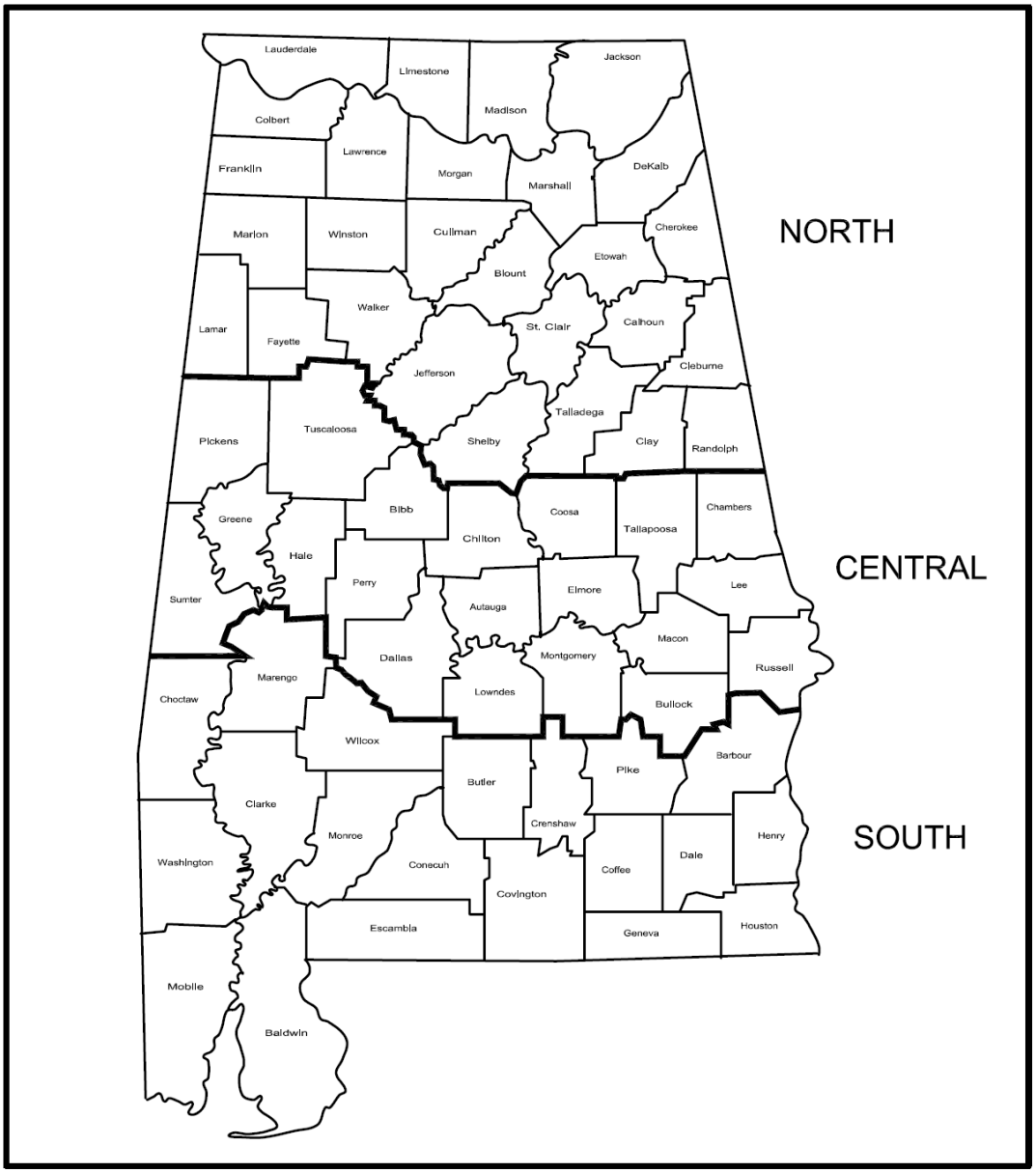

Figure TS-1 Geographical Areas for Species Adaptation and Seeding Dates

Note: Site conditions related to soils and aspect in counties adjacent to or close to county boundaries may justify adjustments in planting dates by qualified design professionals.

Table TS-I Commonly Used Plants for Temporary Cover

Species	Seeding Rate/AC PLS	North	Central	South
			Seeding Dates	
Millet, Browntop or German	40 lbs	Apr1-Aug 1	Apr1- Aug 15	Apr 1-Aug 15
Rye	3 bu	Sep I-Nov 15	Sep 15-Nov 15	Sep 15-Nov 15
Ryegrass	30 lbs	Aug I-Sep 15	Sep I-Oct 15	Sep 1-Oct 15
Sorghum-Sudan Hybrids	40 lbs	May I-Aug 1	Apr 15-Aug 1	Apr I-Aug 15
Sudangrass	40 lbs	May I-Aug I	Apr 15-Aug	Apr I-Aug 15
Wheat	3 bu	Sep I-Nov 1	Sep 15-Nov 15	Sep 15-Nov 15
Common Bermudagrass	10 lbs	Apr 1-July 1	Mar 15-July 15	Mar 1-July 15
Crimson Clover	10lbs	Sept 1-Nov 1	Sept 1-Nov 1	Sept 1-Nov 1

PLS means pure live seed and is used to adjust seeding rates. For example, to plant 10 lbs PLS of a species with germination of 80% and purity of 90%, PLS= 0.8X 0.9 = 72%. 10 lbs PLS = 10/0.72 = 13.9 lbs of the species to be planted.

Site Preparation and Soil Amendments

Complete grading and shaping before applying soil amendments if needed to provide a surface on which equipment can safely and efficiently be used to apply soil amendments and accomplish seedbed preparation and seeding.

Lime

Apply lime according to soil test recommendations. If a soil test is not available, use 1 ton of agricultural limestone or equivalent per acre on coarse textured soils and 2 tons per acre on fine textured soils. Do not apply lime to alkaline soils or to areas which have been limed during the preceding 2 years. Other liming materials that may be selected should be provided in amounts that provide equal value to the criteria listed for agricultural lime or be used in combination with agricultural limestone or Selma chalk to provide equivalent values to agricultural limestone.

Fertilizer

Apply fertilizer according to soil test results. If a soil test is not available, apply 8-24-24 fertilizer.

When vegetation has emerged to a stand and is growing, 30 to 40 lbs/acre (approximately 0.8 lbs/1000 ft^2) of additional nitrogen fertilizer should be applied.

Note: Fertilizer can be blended to meet exact fertilizer recommendations. Take soil test recommendations to local fertilizer dealer for bulk fertilizer blends. This may be more economical than bagged fertilizer.

Application of Soil Amendments

Incorporate lime and fertilizer into the top 6” of soil during seedbed preparation.

Seedbed Preparation

Good seedbed preparation is essential to successful plant establishment. A good seedbed is well pulverized, loose, and smooth. If soils become compacted during grading, loosen them to a depth of 6” to 8” using a ripper or chisel plow.

If rainfall has caused the surface to become sealed or crusted, loosen it just prior to seeding by disking, raking, harrowing, or other suitable methods. When hydroseeding methods are used, the surface should be left with a more irregular surface of clods.

Planting Methods

Seeding

Evenly apply seed using a cyclone seeder (broadcast), drill seeder, cultipacker seeder, or hydroseeder. Broadcast seeding and hydroseeding are appropriate for steep slopes where equipment cannot operate safely. Small grains should be planted no more than 1” deep, and grasses and legumes no more than ½” deep. Seed that are broadcast must be covered by raking or chain dragging, and then lightly firmed with a roller or cultipacker.

Hydroseeding

Surface roughening is particularly important when hydroseeding, as a roughened slope will provide some natural coverage for lime, fertilizer, and seed. The surface should not be compacted or smooth. Fine seedbed preparation is not necessary for hydroseeding operations; large clods, stones, and irregularities provide cavities in which seeds can lodge.

Mix seed, inoculant if required, and a seed carrier with water and apply as slurry uniformly over the area to be treated. The seed carrier should be a cellulose fiber, natural wood fiber or other approved fiber mulch material which is dyed an appropriate color to facilitate uniform application of seed. Use the correct legume inoculant at 4 times the recommended rate when adding inoculant to hydroseeder slurry. The mixture should be applied within one hour after mixing to reduce damage to seed.

Fertilizer should not be mixed with the seed-inoculant mixture because fertilizer salts may damage seed and reduce germination and seedling vigor. Fertilizer may be applied with a hydro seeder as a separate operation after seedlings are established.

Mulching

The use of appropriate mulch provides instant cover and helps ensure establishment of vegetative cover under normal conditions and is essential to seeding success

under harsh site conditions (see the Mulching practice for guidance). Harsh site conditions include the following: slopes steeper than 3:1 and adverse soils (soils that are shallow to rock, rocky, or high in clay or sand). Areas with concentrated flow should be treated differently and require a hydromulch formulated for channels or an appropriate erosion control blanket.

E. Check Dam (CD)

Check Dam (CD)

Practice Description

A check dam (also referred to as a "ditch check") is a small barrier or dam constructed across a swale, drainage ditch or other area of concentrated flow for the purpose of reducing channel erosion. Channel erosion is reduced because check dams flatten the gradient of the flow channel and slow the velocity of channel flow. Check dams can be constructed of rock, wattles (sometimes referred to as tubes or rolls), sand bags, or other materials that may be acceptable to the design professional. Contrary to popular opinion, most check dams trap an insignificant volume of sediment, as check dams usually just trap the coarser grained material leaving the turbid water to flow downstream.

This practice applies in small open channels and drainageways, including temporary and permanent swales. Check dams are not to be used in a live stream. Situations of use include areas in need of protection during establishment of grass and areas that cannot receive a temporary or permanent non-erodible lining for an extended period of time.

Planning Considerations

Check dams are utilized in concentrated flow areas to provide temporary channel stabilization during the intense runoff periods associated with construction disturbances. Check dams may be constructed of rock, wattles, sand bags, or other suitable material, including manufactured products. Most check dams are constructed of rock. Rock may not be acceptable in some installations because of

aesthetics and alternative types of check dams need to be considered. Rock check dams (Figures CD-1 and CD-2) are usually installed with backhoes or other suitable equipment but hand labor is likely needed to complete most installations to the quality needed. The rock is usually purchased and some locations in the state may not have rock readily available. The use of rock should be considered carefully in areas to be mowed. Some rock may be washed downstream and should be removed before each mowing operation. The use of small graded aggregate and geotextile can be used on the upstream face of the rock check dam to increase the sediment trapping efficiency of the rock check dam. Measures must be taken to prevent undermining of the check dam.

Water flowing over a check dam is very often super-critical and creates erosive forces on the down slope of the dam and immediately downstream of the dam. Some measures to prevent this erosion include placing larger rock on the downstream face of a rock dam, concrete grouting the downstream face of a rock dam, and providing erosion protection material just downstream of the dam.

Wattles have been found to be best installed without trenching and on top of stapled geotextile that extends up and downstream from the wattle. Wattles must be properly stapled and staked on top of the geotextile (see picture below).

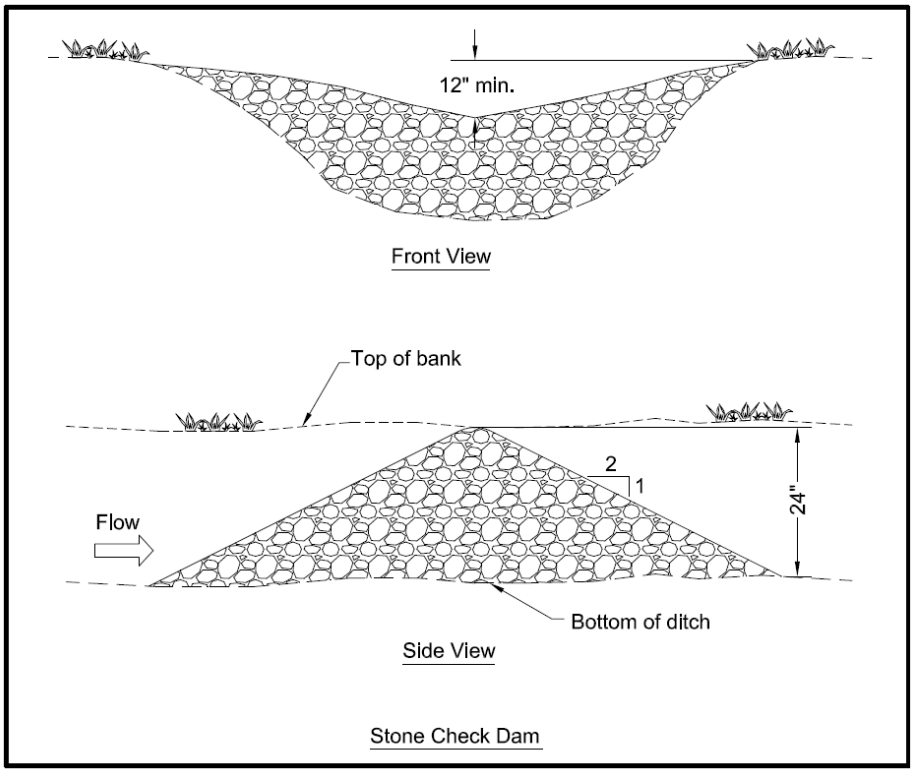

Figure CD-1 Profile and Cross-Section of Typical Rock Check Dams

Check dams should be planned to be compatible with the other features such as streets, walks, trails, sediment basins and rights-of-way or property lines. Check dams are installed with the center overflow area lower in elevation than the ends to ensure flow goes over the check dam and not around. Check dams are normally constructed in series and the dams should be located at a normal interval from other grade controls such as culverts or sediment basins.

The use of check dams are a temporary BMP and should be removed following construction to allow for final long term stabilization.

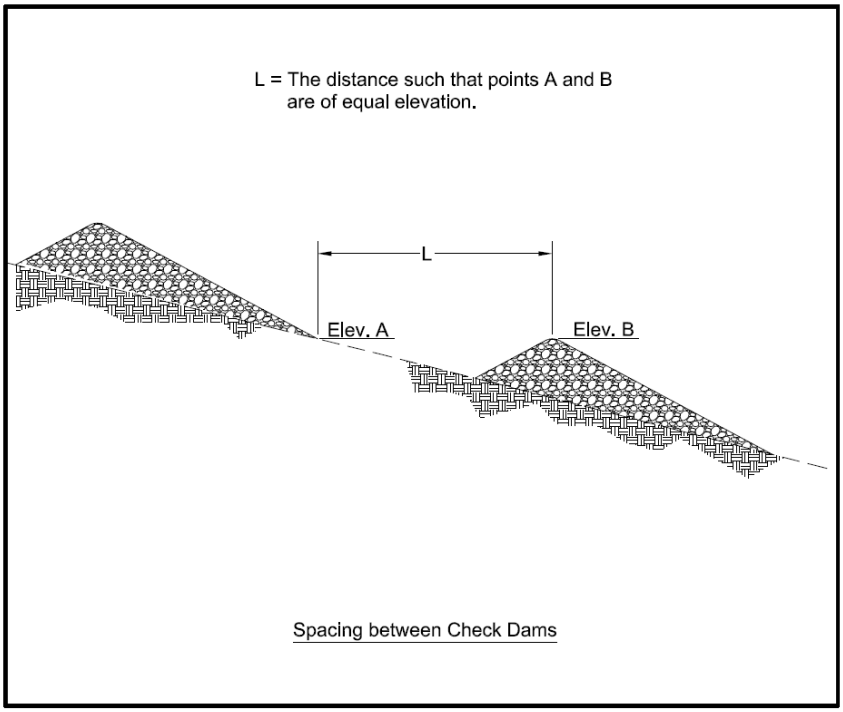

Figure CD-2 Profile of Typical Rock Check Dams

Design Criteria

Formal design is not required. The following limiting factors should be adhered to when designing check dams.

Drainage Area

Ten acres or less.

Maximum Height

Two feet when drainage area is less than 5 acres.

Three feet when drainage area is 5 to 10 acres.

Depth of Flow

Six inches when drainage area is less than 5 acres.

Twelve inches when drainage area is 5 to 10 acres.

The top of dam, perpendicular to flow, should be parabolic. The center of the dam should be constructed lower than the ends. The elevation of the center of the dam should be lower than the ends by the depth of flow listed above.

Side Slopes

2:1 or flatter.

Spacing

The elevation of the toe of the upstream dam should be at or below the elevation of crest of the downstream dam (Figure CD-2).

For example, if the channel is 3% grade, and the drainage area is 3 acres:

The check dam height would be 2 feet.

The check dam spacing should be 67 feet:

Spacing (ft) = dam height (ft) / channel grade

Spacing = 2 ft / 0.03 = 67 feet

Keyway

Measures should be taken to ensure the flow does not cause erosion underneath the check dam. This is often accomplished using geotextile underneath the check dam or in highly erosive soils a keyway lined with geotextile and filled with rock. Keyways if used should be keyed into the channel bottom and abutments to a depth of 12 to 24”. The keyway width should be at least 12”.

Rock Check Dams

Rock check dams should be constructed of appropriately sized durable rock riprap. Riprap gradation should conform to the requirements of Alabama Highway Department, Standard Specification for Highway Construction.

In soils where failure by piping of soils into the rock is likely, a non-woven geotextile will be used as a filter to separate the soils from the rock. The geotextile shall be of the strength and durability required for the project to ensure the rock and soil base are stable. Generally, the non-woven geotextile should meet the requirements found in ASSHTO M288.

This Page Intentionally Left Blank

F. Diversion (DV)

Diversion (DV)

Practice Description

A diversion is a watercourse constructed across a slope consisting of an excavated channel, a compacted ridge or a combination of both. Most diversions are constructed by excavating a channel and using the excavated material to construct a ridge on the downslope side of the channel. Right-of-way diversions and temporary diversions are sometimes constructed by making a ridge, often called a berm, from fill material.

This practice applies to sites where stormwater runoff can be redirected to permanently protect structures or areas downslope from erosion, sediment, and excessive wetness or localized flooding. Diversions may be used to temporarily divert stormwater runoff to protect disturbed areas and slopes or to retain sediment on-site during construction.

Perimeter protection is sometimes used to describe both permanent and temporary diversions used at either the upslope or downslope side of a construction area.

Right-of-way diversions, sometimes referred to as water bars, are used to shorten the flow length on a sloping right-of-way and reduce the erosion potential of the stormwater runoff.

Planning Considerations

Diversions are designed to intercept and carry excess water to a stable outlet.

Diversions can be useful tools for managing surface water flows and preventing soil erosion. On moderately sloping areas, they may be placed at intervals to trap and divert sheet flow before it has a chance to concentrate and cause rill and gully erosion.

Diversions may be placed at the top of cut or fill slopes to keep runoff from upgradient drainage areas off the slope. The following picture illustrates the placement of a diversion near the top of the slope. Diversions are sometimes built at the base of steeper slopes to protect flatter developed areas which cannot withstand runoff water from outside areas. Also, they can be used to protect structures, parking lots, adjacent properties, and other special areas from flooding.

Diversion near the top of a slope

Diversions are preferable to other types of man-made stormwater conveyance systems because they more closely simulate natural flow patterns and characteristics. Flow velocities are generally kept to a minimum. When properly coordinated into the landscape design of a site, diversions can he visually pleasing as well as functional.

As with any earthen structure, it is very important to establish adequate vegetation as soon as possible after installation. It is usually important to stabilize the drainage area above the diversion so that sediment will not enter and accumulate in the diversion channel.

Design Criteria

Location

Diversion location should be determined by considering outlet conditions, topography, land use, soil type, length of slope, seepage (where seepage is a problem) and the development layout. Outlets must be stable after the diversion empties stormwater flow into it; therefore, care should be exercised in selecting the location of the diversion and its outlet.

Capacity

The diversion channel must have a minimum capacity to carry the runoff expected from a storm frequency meeting the requirements of Table DV-l with a freeboard of at least 0.3 foot (Figure DV-1).

The storm frequency should be used to determine the required channel capacity, Q (peak rate of runoff). The peak rate of runoff should be determined using the Natural Resources Conservation Service runoff curve no. (RCN) method or other equivalent methods.

Table DV-1 Design Frequency

Diversion Type	Typical Area of Protection	24-Hour Design Storm Frequency
Temporary	Construction Areas	2-year
	Building Sites	5-year
Permanent	Agricultural Land	10-year
	Mined Reclamation Area	10-year
	Recreation Areas	10-year
	Isolated Buildings	25-year
	Urban areas, Residential, School, Industrial Areas, etc.	50-year

Diversions designed to protect homes, schools, industrial buildings, roads, parking lots, and comparable high-risk areas, and those designed to function in connection with other structures, should have sufficient capacity to carry peak runoff expected from a storm frequency consistent with the hazard involved.

Velocities

Diversions should be designed so that the design velocities will be safe for the planned type of protective vegetation and the expected maintenance,-Maximum permissible velocities are dependent upon the erosion resistance of the soil (Table DV-2) and the quality of the vegetation maintained.

Table DV-2 Permissible Velocities

Soil Texture	Velocity in Feet/Second		
	Conditions of Vegetation		
	Poor	Fair	Good
Sand, Silt, Sandy Loam, Silt Loam	1.5	2.0	3.0
Silty Clay Loam, Sandy Clay Loam	2.5	3.0	4.0
Clay	3.0	4.0	5.0

Channel Design

The diversion channel may be parabolic, trapezoidal or v-shaped as shown in Figure DV-1 and should be designed in accordance with the procedure provided in the Diversion Design section. Land slope must be considered when choosing channel dimensions. On steeper slopes, narrow and deep channels may be required. On more gentle slopes, broad, shallow channels can be used to facilitate maintenance.

Ridge Design

The supporting ridge cross section should meet the configuration and requirements of Figure DV-1.

The side slopes should be no steeper than 2:1. Side slopes should be flatter, 5:1 to 10:1, when the diversion is to be permanent with mowing and other maintenance activities performed on or around it.

The width of the ridge at the design water elevation should be a minimum of 4 feet.

The minimum freeboard should be 0.3 foot.

The design should include a 10% settlement factor.

Outlet

Diversions should have adequate outlets which will convey concentrated runoff without erosion. Acceptable outlets include practices such as Grassed Swale, Lined Swale, Drop Structure, Sediment Basin, and Stormwater Detention Basins.

Stabilization

Unless otherwise stabilized, the ridge and channel should be seeded within 13 days of installation in accordance with the applicable seeding practice, Permanent Seeding or Temporary Seeding.

Disturbed areas draining into the diversion should be seeded and mulched prior to or at the time the diversion is constructed in accordance with the Permanent Seeding or Temporary Seeding (whichever is applicable) practices.

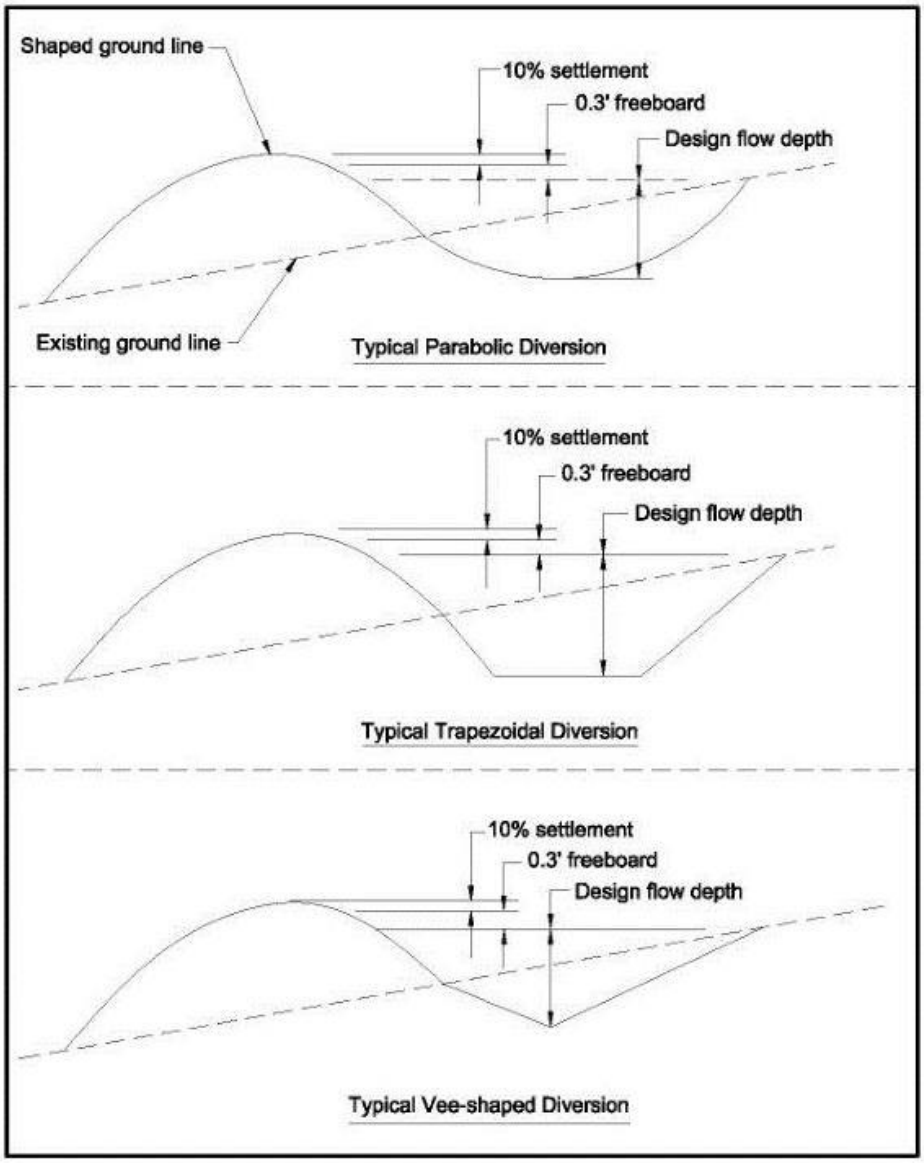

Figure DV-1 Typical Diversions Detail

Diversion Design

Note: This design example uses the Permissible Velocity approach. Diversion design using the Tractive Stress approach can also be used but is not discussed in this document.

Table DV-l through DV-16 may be used to facilitate the design of grass-lined diversions with parabolic cross sections. These tables are based on a retardance of "D" (vegetation newly cut) to determine V1 for stability considerations. To determine channel capacity, choose a retardance of "C" when proper maintenance is expected; otherwise, design channel capacity based on retardance "B". Refer to Table DV-2 for maximum permissible velocities. The permissible velocities guide the selection of V1 and should not be exceeded. It is good practice to use a value for V1 that is significantly less than the maximum allowable when choosing a design cross section. When velocities approach the maximum allowable, flatter grades should be evaluated or a more erosion resistant liner such as erosion control blanket or riprap should be considered. After the diversion dimensions are selected in the design tables, the top width should be increased by 4 feet. and the depth by 0.3 foot. for freeboard.

Example Problem

Given

Q: 30 cfs
Grade: 1%
Soil: Sandy clay loam
Condition of vegetation expected: fair
Maintenance: low; will be cut only twice a year.
Site will allow a top width of 26 feet.

Find

Diversion top width and depth that will be stable and fit site conditions.

Solution

From Table DV-2 use maximum permissible velocity of 3.0 ft./sec.

Since maintenance will be low use "B" retardance for capacity.

From Table DV-4 use retardance "D" and "B";
Grade 1.00 Percent Top width = 21.0 feet + 4 feet = 25.0 feet.

Depth = 1.6 feet + 0.3 foot = 1.9 feet.

V_2 = 1.3 ft./sec.

Note: V_1 < 3.0 ft./sec.; Top width < 26 feet, design O.K.

Note: It is good practice to select a cross section that will give a velocity, V_1, well below the maximum allowable whenever site conditions permit. Wide, shallow cross sections are more stable and require less maintenance. It is always prudent to evaluate flatter design grades in order to best fit diversions to the site and keep velocities well below maximum allowable.

Table DV-3 Parabolic Diversion Design Chart (Retardance "D" and "B", Grade 0.50%)

V1 FOR RETARDANCE "D", TOP WIDTH (T), DEPTH (D), AND V2 FOR RETARDANCE "B"

Grade 0.50 Percent

Q CFS	V1=2.0			V1=2.5			V1=3.0			V1=3.5			V1=4.0			V1=4.5			V1=5.0			V1=5.5			V1=6.0		
	T	D	V2	T	D	V2	T	D	V2	T	D	V2	T	D	V2	T	D	V2	T	D	V2	T	D	V2	T	D	V2
5																											
10																											
15	10.0	2.2	1.0																								
20	13.7	2.1	1.0	8.4	2.7	1.3																					
25	17.4	2.1	1.0	11.3	2.4	1.4																					
30	21.0	2.0	1.0	13.9	2.3	1.4																					
35	24.6	2.0	1.1	16.4	2.3	1.4	10.7	2.8	1.8																		
40	28.5	2.0	1.0	18.9	2.3	1.4	12.6	2.7	1.8																		
45	31.9	2.0	1.1	21.4	2.3	1.4	14.4	2.6	1.8																		
50	35.5	2.0	1.1	23.9	2.2	1.4	16.2	2.5	1.8	9.9	3.4	2.2															
55	39.0	2.0	1.1	26.3	2.2	1.4	17.9	2.5	1.8	11.9	3.1	2.3															
60	42.5	2.0	1.1	28.8	2.2	1.4	19.7	2.5	1.8	13.2	3.0	2.3															
65	46.1	2.0	1.1	31.6	2.2	1.4	21.4	2.5	1.8	14.5	2.9	2.3															
70	49.6	2.0	1.1	34.0	2.2	1.4	23.1	2.5	1.8	15.8	2.9	2.3	11.0	3.6	2.6												
75	53.1	2.0	1.1	36.4	2.2	1.4	24.9	2.5	1.8	17.1	2.8	2.3	12.7	3.4	2.7												
80	56.6	2.0	1.1	38.8	2.2	1.4	26.6	2.5	1.8	18.4	2.8	2.3	13.7	3.3	2.7												
85	60.2	2.0	1.1	41.2	2.2	1.4	28.3	2.5	1.8	19.7	2.8	2.3	14.8	3.2	2.7												
90	63.7	2.0	1.1	43.6	2.2	1.4	30.0	2.4	1.8	20.9	2.8	2.3	15.9	3.2	2.7												
95	67.2	2.0	1.1	46.1	2.2	1.4	31.7	2.4	1.8	22.1	2.8	2.3	16.9	3.1	2.7												
100	70.8	2.0	1.1	48.5	2.2	1.4	33.7	2.4	1.8	23.4	2.8	2.3	17.9	3.1	2.7	12.3	3.9	3.1									
105	74.3	2.0	1.1	50.9	2.2	1.4	35.4	2.4	1.8	24.5	2.7	2.4	18.9	3.1	2.7	13.7	3.7	3.1									
110	77.8	2.0	1.1	53.3	2.2	1.4	37.1	2.4	1.8	25.8	2.7	2.4	19.9	3.1	2.7	14.6	3.6	3.1									
115	81.4	2.0	1.1	55.7	2.2	1.4	38.7	2.4	1.8	27.0	2.7	2.4	20.8	3.0	2.7	15.4	3.6	3.1									
120	84.9	2.0	1.1	58.1	2.2	1.4	40.4	2.4	1.9	28.2	2.7	2.4	21.8	3.0	2.7	16.3	3.5	3.1									
125	88.4	2.0	1.1	60.6	2.2	1.4	42.1	2.4	1.9	29.4	2.7	2.4	22.8	3.0	2.7	17.1	3.5	3.1									
130	92.0	2.0	1.1	63.0	2.2	1.4	43.8	2.4	1.9	30.6	2.7	2.4	23.8	3.0	2.7	17.9	3.5	3.1									
135	95.5	2.0	1.1	65.4	2.2	1.4	45.4	2.4	1.9	31.8	2.7	2.4	24.8	3.0	2.7	18.7	3.4	3.2									
140	99.0	2.0	1.1	67.8	2.2	1.4	47.1	2.4	1.9	33.1	2.7	2.4	25.7	3.0	2.8	19.4	3.4	3.2									
145	102.6	2.0	1.1	70.2	2.2	1.4	48.8	2.4	1.9	34.3	2.7	2.4	26.7	3.0	2.8	20.2	3.4	3.2	13.5	4.4	3.6						
150	106.1	2.0	1.1	72.6	2.2	1.4	50.5	2.4	1.9	35.5	2.7	2.4	27.7	3.0	2.8	21.0	3.4	3.2	14.4	4.3	3.6						

RETARDANCE "D" AND "B"

NOTE: Width and Depth dimensions are in feet; Velocity measurements are in feet per second; Depth "D" does not include allowance for freeboard or settlement.

Table DV-4 Parabolic Diversion Design Chart (Retardance "D" and "B", Grade 1.00%)

V1 FOR RETARDANCE "D", TOP WIDTH (T), DEPTH (D), AND V2 FOR RETARDANCE "B"

Grade 1.00 Percent

Q CFS	V1=2.0			V1=2.5			V1=3.0			V1=3.5			V1=4.0			V1=4.5			V1=5.0			V1=5.5			V1=6.0		
	T	D	V2	T	D	V2	T	D	V2	T	D	V2	T	D	V2	T	D	V2	T	D	V2	T	D	V2	T	D	V2
5																											
10	9.7	1.6	1.0	6.2	2.0	1.2																					
15	14.8	1.5	1.0	10.2	1.7	1.3	6.5	2.2	1.5																		
20	20.2	1.5	1.0	13.8	1.7	1.3	9.6	1.9	1.6																		
25	25.1	1.5	1.0	17.4	1.7	1.3	12.2	1.9	1.6	8.5	2.2	2.0															
30	30.1	1.5	1.0	21.0	1.6	1.3	14.9	1.8	1.7	10.6	2.1	2.1															
35	35.1	1.5	1.0	24.7	1.6	1.3	17.5	1.8	1.7	12.6	2.0	2.1	8.9	2.4	2.5												
40	40.1	1.5	1.0	28.2	1.6	1.3	20.0	1.8	1.7	14.5	2.0	2.1	10.5	2.3	2.5												
45	45.1	1.5	1.0	31.7	1.6	1.3	22.5	1.8	1.7	16.4	2.0	2.1	12.1	2.2	2.5	8.2	2.8	2.9									
50	50.2	1.5	1.0	35.2	1.6	1.3	25.4	1.8	1.7	18.3	2.0	2.1	13.6	2.2	2.5	10.0	2.6	2.9									
55	55.2	1.5	1.0	38.8	1.6	1.3	27.9	1.8	1.7	20.3	1.9	2.1	15.1	2.2	2.5	11.2	2.5	3.0									
60	60.2	1.5	1.0	42.3	1.6	1.3	30.4	1.8	1.7	22.2	1.9	2.1	16.6	2.1	2.5	12.4	2.4	3.0									
65	65.2	1.5	1.0	45.8	1.6	1.3	32.9	1.8	1.7	24.0	1.9	2.1	18.0	2.1	2.5	13.6	2.4	3.0	8.9	3.1	3.5						
70	70.2	1.5	1.0	49.3	1.6	1.3	35.5	1.8	1.7	25.9	1.9	2.1	19.5	2.1	2.6	14.8	2.4	3.0	10.6	2.8	3.5						
75	75.2	1.5	1.0	52.8	1.6	1.3	38.0	1.8	1.7	28.2	1.9	2.1	20.9	2.1	2.6	16.0	2.3	3.0	11.5	2.8	3.5						
80	80.2	1.5	1.0	56.3	1.6	1.3	40.5	1.8	1.7	30.0	1.9	2.1	22.3	2.1	2.6	17.1	2.3	3.0	12.5	2.7	3.5						
85	85.2	1.5	1.0	59.8	1.6	1.3	43.0	1.8	1.7	31.9	1.9	2.1	23.7	2.1	2.6	18.3	2.3	3.0	13.5	2.7	3.6	9.8	3.3	3.9			
90	90.2	1.5	1.0	63.3	1.6	1.3	45.6	1.8	1.7	33.6	1.9	2.1	25.2	2.1	2.6	19.4	2.3	3.1	14.4	2.6	3.6	10.9	3.1	3.9			
95	95.2	1.5	1.0	66.9	1.6	1.3	48.1	1.8	1.7	35.5	1.9	2.1	26.6	2.1	2.6	20.5	2.3	3.1	15.3	2.6	3.6	12.0	3.0	3.9			
100	100.2	1.5	1.0	70.4	1.6	1.3	50.6	1.8	1.7	37.4	1.9	2.1	28.0	2.1	2.6	21.6	2.3	3.1	16.2	2.6	3.6	12.9	2.9	4.0			
105	105.3	1.5	1.0	73.9	1.6	1.3	53.1	1.8	1.7	39.2	1.9	2.1	29.8	2.1	2.6	22.8	2.3	3.1	17.1	2.6	3.6	13.7	2.9	4.0	10.8	3.4	4.3
110	110.3	1.5	1.0	77.4	1.6	1.3	55.7	1.8	1.7	41.1	1.9	2.1	31.3	2.1	2.6	23.9	2.3	3.1	18.0	2.6	3.6	14.4	2.9	4.0	12.0	3.2	4.3
115	115.3	1.5	1.0	80.9	1.6	1.3	58.2	1.8	1.7	42.9	1.9	2.1	32.7	2.1	2.6	25.0	2.3	3.1	18.9	2.5	3.6	15.2	2.8	4.0	12.7	3.2	4.3
120	120.3	1.5	1.0	84.4	1.6	1.3	60.7	1.8	1.7	44.8	1.9	2.1	34.1	2.1	2.6	26.1	2.2	3.1	19.7	2.5	3.6	16.0	2.8	4.0	13.4	3.1	4.3
125	125.3	1.5	1.0	88.0	1.6	1.3	63.2	1.8	1.7	46.7	1.9	2.1	35.5	2.1	2.6	27.2	2.2	3.1	20.6	2.5	3.6	16.8	2.8	4.0	14.1	3.1	4.3
130	130.3	1.5	1.0	91.5	1.6	1.3	65.8	1.8	1.7	48.5	1.9	2.1	36.9	2.1	2.6	28.4	2.2	3.1	21.5	2.5	3.6	17.4	2.8	4.0	14.8	3.1	4.3
135	135.3	1.5	1.0	95.0	1.6	1.3	68.3	1.8	1.7	50.4	1.9	2.1	38.3	2.1	2.6	29.5	2.2	3.1	22.4	2.5	3.6	18.2	2.8	4.0	15.5	3.0	4.3
140	140.3	1.5	1.0	98.5	1.6	1.3	70.8	1.8	1.7	52.2	1.9	2.1	39.7	2.0	2.6	30.6	2.2	3.1	23.2	2.5	3.6	18.9	2.7	4.0	16.1	3.0	4.4
145	145.3	1.5	1.0	102.0	1.6	1.3	73.3	1.8	1.7	54.1	1.9	2.1	41.1	2.0	2.6	32.1	2.2	3.0	24.1	2.5	3.6	19.7	2.7	4.0	16.8	3.0	4.4
150	150.3	1.5	1.0	105.5	1.6	1.3	75.9	1.8	1.7	56.0	1.9	2.1	42.5	2.0	2.6	33.2	2.2	3.0	25.0	2.5	3.6	20.4	2.7	4.1	17.5	2.9	4.4

RETARDANCE "D" AND "B"

NOTE: Width and Depth dimensions are in feet; Velocity measurements are in feet per second; Depth "D" does not include allowance for freeboard or settlement.

Table DV-5 Parabolic Diversion Design Chart (Retardance "D" and "B", Grade 2.00%)

V1 FOR RETARDANCE "D", TOP WIDTH (T), DEPTH (D), AND V2 FOR RETARDANCE "B"

Grade 2.00 Percent

Q CFS	V1=2.0			V1=2.5			V1=3.0			V1=3.5			V1=4.0			V1=4.5			V1=5.0			V1=5.5			V1=6.0		
	T	D	V2	T	D	V2	T	D	V2	T	D	V2	T	D	V2	T	D	V2	T	D	V2	T	D	V2	T	D	V2
5	7.1	1.2	0.9																								
10	14.7	1.2	0.9	9.5	1.3	1.2	7.0	1.4	1.5																		
15	22.0	1.2	0.9	14.5	1.3	1.2	10.8	1.4	1.5	8.0	1.5	1.9	5.5	1.9	2.1												
20	29.3	1.2	0.9	19.6	1.2	1.2	14.6	1.3	1.5	10.9	1.5	1.9	8.1	1.6	2.3	5.5	2.1	2.6									
25	36.6	1.2	0.9	24.4	1.2	1.2	18.5	1.3	1.5	13.6	1.4	1.9	10.4	1.6	2.3	7.9	1.8	2.7									
30	43.9	1.2	0.9	29.3	1.2	1.2	22.2	1.3	1.6	16.6	1.4	1.9	12.7	1.5	2.3	9.7	1.7	2.7	7.3	2.0	3.1						
35	51.2	1.2	0.9	34.2	1.2	1.2	25.8	1.3	1.6	19.6	1.4	1.9	14.9	1.5	2.3	11.5	1.7	2.7	8.9	1.9	3.2						
40	58.5	1.2	0.9	39.0	1.2	1.2	29.5	1.3	1.6	22.4	1.4	1.9	17.1	1.5	2.3	13.3	1.6	2.8	10.4	1.8	3.2	8.0	2.1	3.6			
45	65.8	1.2	0.9	43.9	1.2	1.2	33.2	1.3	1.6	25.2	1.4	1.9	19.3	1.5	2.3	15.0	1.6	2.8	11.8	1.8	3.2	9.2	2.0	3.7			
50	73.1	1.2	0.9	48.8	1.2	1.2	36.8	1.3	1.6	28.0	1.4	1.9	21.7	1.5	2.3	16.7	1.6	2.8	13.2	1.8	3.2	10.5	1.9	3.7	7.9	2.3	4.1
55	80.4	1.2	0.9	53.6	1.2	1.2	40.5	1.3	1.6	30.7	1.4	1.9	23.9	1.5	2.3	18.5	1.6	2.8	14.6	1.7	3.2	11.7	1.9	3.7	9.2	2.2	4.1
60	87.7	1.2	0.9	58.5	1.2	1.2	44.2	1.3	1.6	33.5	1.4	1.9	26.0	1.5	2.3	20.2	1.6	2.8	16.0	1.7	3.2	12.8	1.9	3.7	10.2	2.1	4.1
65	95.0	1.2	0.9	63.4	1.2	1.2	47.9	1.3	1.6	36.3	1.4	1.9	28.2	1.5	2.3	22.1	1.6	2.8	17.4	1.7	3.3	14.0	1.9	3.7	11.3	2.1	4.2
70	102.3	1.2	0.9	68.2	1.2	1.2	51.6	1.3	1.6	39.1	1.4	1.9	30.3	1.5	2.3	23.8	1.6	2.8	18.8	1.7	3.3	15.2	1.9	3.7	12.3	2.1	4.2
75	109.6	1.2	0.9	73.1	1.2	1.2	55.2	1.3	1.6	41.9	1.4	1.9	32.5	1.5	2.3	25.5	1.6	2.8	20.1	1.7	3.3	16.2	1.8	3.7	13.2	2.0	4.2
80	116.9	1.2	0.9	78.0	1.2	1.2	58.9	1.3	1.6	44.7	1.4	1.9	34.6	1.5	2.3	27.2	1.6	2.8	21.5	1.7	3.3	17.4	1.8	3.6	14.2	2.0	4.2
85	124.2	1.2	0.9	82.9	1.2	1.2	62.6	1.3	1.6	47.4	1.4	1.9	36.8	1.5	2.3	28.9	1.6	2.8	22.9	1.7	3.3	18.5	1.8	3.6	15.1	2.0	4.2
90	131.5	1.2	0.9	87.7	1.2	1.2	66.3	1.3	1.6	50.2	1.4	1.9	39.0	1.5	2.3	30.6	1.6	2.8	24.6	1.7	3.2	19.8	1.8	3.8	16.1	2.0	4.2
95	138.8	1.2	0.9	92.6	1.2	1.2	69.9	1.3	1.6	53.0	1.4	1.9	41.1	1.5	2.3	32.3	1.6	2.8	25.9	1.7	3.3	20.8	1.8	3.8	17.0	2.0	4.2
100	146.1	1.2	0.9	97.5	1.2	1.2	73.6	1.3	1.6	55.8	1.4	1.9	43.3	1.5	2.3	34.0	1.6	2.8	27.3	1.7	3.3	21.9	1.8	3.8	18.0	2.0	4.2
105	153.4	1.2	0.9	102.3	1.2	1.2	77.3	1.3	1.6	58.6	1.4	1.9	45.4	1.5	2.3	35.7	1.6	2.8	28.6	1.7	3.3	23.0	1.8	3.8	18.9	2.0	4.2
110	160.7	1.2	0.9	107.2	1.2	1.2	81.0	1.3	1.6	61.4	1.4	1.9	47.6	1.5	2.3	37.3	1.6	2.8	30.0	1.7	3.3	24.1	1.8	3.8	19.8	2.0	4.2
115	168.0	1.2	0.9	112.1	1.2	1.2	84.7	1.3	1.6	64.2	1.4	1.9	49.8	1.5	2.3	39.0	1.6	2.8	31.3	1.7	3.3	25.3	1.8	3.8	20.8	2.0	4.2
120	175.3	1.2	0.9	117.0	1.2	1.2	88.3	1.3	1.6	67.0	1.4	1.9	51.9	1.5	2.3	40.7	1.6	2.8	32.7	1.7	3.3	26.7	1.8	3.7	21.7	2.0	4.2
125	182.6	1.2	0.9	121.8	1.2	1.2	92.0	1.3	1.6	69.7	1.4	1.9	54.1	1.5	2.3	42.4	1.6	2.8	34.1	1.7	3.3	27.8	1.8	3.7	22.6	1.9	4.3
130	189.9	1.2	0.9	126.7	1.2	1.2	95.7	1.3	1.6	72.5	1.4	1.9	56.2	1.5	2.3	44.1	1.6	2.8	35.4	1.7	3.3	28.9	1.8	3.7	23.6	1.9	4.3
135	197.3	1.2	0.9	131.6	1.2	1.2	99.4	1.3	1.6	75.3	1.4	1.9	58.4	1.5	2.3	45.8	1.6	2.8	36.8	1.7	3.3	30.0	1.8	3.7	24.5	1.9	4.3
140	204.6	1.2	0.9	136.5	1.2	1.2	103.1	1.3	1.6	78.1	1.4	1.9	60.6	1.5	2.3	47.5	1.6	2.8	38.1	1.7	3.3	31.1	1.8	3.7	25.4	1.9	4.3
145	211.9	1.2	0.9	141.3	1.2	1.2	106.7	1.3	1.6	80.9	1.4	1.9	62.7	1.5	2.3	49.2	1.6	2.8	39.5	1.7	3.3	32.3	1.8	3.7	26.4	1.9	4.3
150	219.2	1.2	0.9	146.2	1.2	1.2	110.4	1.3	1.6	83.7	1.4	1.9	64.9	1.5	2.3	50.9	1.6	2.8	40.8	1.7	3.3	33.4	1.8	3.7	27.3	1.9	4.3

RETARDANCE "D" AND "B"

NOTE: Width and Depth dimensions are in feet; Velocity measurements are in feet per second; Depth "D" does not include allowance for freeboard or settlement.

Table DV-6 Parabolic Diversion Design Chart (Retardance "D" and "B", Grade 4.00%)

V1 FOR RETARDANCE "D", TOP WIDTH (T), DEPTH (D), AND V2 FOR RETARDANCE "B"

Grade 4.00 Percent

Q CFS	V1=2.0			V1=2.5			V1=3.0			V1=3.5			V1=4.0			V1=4.5			V1=5.0			V1=5.5			V1=6.0		
	T	D	V2	T	D	V2	T	D	V2	T	D	V2	T	D	V2	T	D	V2	T	D	V2	T	D	V2	T	D	V2
5	10.1	0.9	0.8	7.0	1.0	1.1	4.9	1.1	1.4																		
10	20.6	0.9	0.8	14.4	0.9	1.1	10.3	1.0	1.4	7.9	1.1	1.8	6.1	1.2	2.1	4.5	1.4	2.4									
15	30.7	0.9	0.8	21.5	0.9	1.1	15.7	1.0	1.4	12.0	1.1	1.8	9.4	1.1	2.1	7.4	1.2	2.5	5.8	1.4	2.8						
20	40.9	0.9	0.8	28.6	0.9	1.1	20.9	1.0	1.4	16.3	1.0	1.8	12.6	1.1	2.1	10.1	1.2	2.5	8.0	1.3	2.9	6.3	1.4	3.3			
25	51.1	0.9	0.8	35.8	0.9	1.1	26.1	1.0	1.4	20.3	1.0	1.8	16.0	1.1	2.1	12.7	1.2	2.5	10.2	1.3	2.9	8.2	1.4	3.4	6.5	1.5	3.8
30	61.3	0.9	0.8	42.9	0.9	1.1	31.4	1.0	1.4	24.4	1.0	1.8	19.2	1.1	2.1	15.2	1.2	2.5	12.3	1.3	2.9	10.0	1.3	3.4	8.1	1.5	3.8
35	71.5	0.9	0.8	50.1	0.9	1.1	36.6	1.0	1.4	28.3	1.0	1.8	22.4	1.1	2.1	18.0	1.2	2.5	14.4	1.2	2.9	11.7	1.3	3.4	9.6	1.4	3.8
40	81.8	0.9	0.8	57.2	0.9	1.1	41.8	1.0	1.5	32.4	1.0	1.8	25.6	1.1	2.1	20.6	1.2	2.5	16.5	1.2	2.9	13.5	1.3	3.4	11.1	1.4	3.8
45	92.0	0.9	0.8	64.4	0.9	1.1	47.0	1.0	1.5	36.4	1.0	1.8	28.8	1.1	2.1	23.1	1.2	2.5	18.6	1.2	2.9	15.2	1.3	3.4	12.6	1.4	3.9
50	102.2	0.9	0.8	71.5	0.9	1.1	52.2	1.0	1.5	40.5	1.0	1.8	32.0	1.1	2.1	25.7	1.2	2.5	20.9	1.2	2.9	17.0	1.3	3.4	14.0	1.4	3.9
55	112.4	0.9	0.8	78.7	0.9	1.1	57.5	1.0	1.5	44.5	1.0	1.8	35.2	1.1	2.1	28.2	1.2	2.5	23.0	1.2	2.9	18.9	1.3	3.4	15.4	1.4	3.9
60	122.6	0.9	0.8	85.8	0.9	1.1	62.7	1.0	1.5	48.5	1.0	1.8	38.4	1.1	2.2	30.8	1.2	2.5	25.1	1.2	2.9	20.6	1.3	3.4	16.9	1.4	3.9
65	132.8	0.9	0.8	93.0	0.9	1.1	67.9	1.0	1.5	52.6	1.0	1.8	41.5	1.1	2.2	33.4	1.2	2.5	27.2	1.2	2.9	22.3	1.3	3.4	18.3	1.4	3.9
70	143.1	0.9	0.8	100.1	0.9	1.1	73.1	1.0	1.5	56.6	1.0	1.8	44.7	1.1	2.2	35.9	1.2	2.5	29.2	1.2	2.9	24.0	1.3	3.4	20.0	1.4	3.9
75	153.3	0.9	0.8	107.3	0.9	1.1	78.3	1.0	1.5	60.7	1.0	1.8	47.9	1.1	2.2	38.5	1.2	2.5	31.3	1.2	2.9	25.7	1.3	3.4	21.4	1.4	3.9
80	163.5	0.9	0.8	114.4	0.9	1.1	83.6	1.0	1.5	64.7	1.0	1.8	51.1	1.1	2.2	41.0	1.2	2.5	33.4	1.2	2.9	27.4	1.3	3.4	22.8	1.4	3.9
85	173.7	0.9	0.8	121.6	0.9	1.1	88.8	1.0	1.5	68.8	1.0	1.8	54.3	1.1	2.2	43.6	1.2	2.5	35.5	1.2	2.9	29.1	1.3	3.4	24.2	1.4	3.9
90	183.9	0.9	0.8	128.7	0.9	1.1	94.0	1.0	1.5	72.8	1.0	1.8	57.5	1.1	2.2	46.2	1.2	2.5	37.6	1.2	2.9	30.8	1.3	3.4	25.7	1.4	3.9
95	194.1	0.9	0.8	135.9	0.9	1.1	99.2	1.0	1.5	76.8	1.0	1.8	60.7	1.1	2.2	48.7	1.2	2.5	39.7	1.2	2.9	32.5	1.3	3.4	27.1	1.4	3.9
100	204.4	0.9	0.8	143.0	0.9	1.1	104.4	1.0	1.5	80.9	1.0	1.8	63.9	1.1	2.2	51.3	1.2	2.5	41.7	1.2	2.9	34.2	1.3	3.4	28.5	1.3	3.9
105	214.6	0.9	0.8	150.2	0.9	1.1	109.7	1.0	1.5	84.9	1.0	1.8	67.1	1.1	2.2	53.9	1.2	2.5	43.8	1.2	2.9	35.9	1.3	3.4	29.9	1.3	3.9
110	224.8	0.9	0.8	157.4	0.9	1.1	114.9	1.0	1.5	89.0	1.0	1.8	70.3	1.1	2.2	56.4	1.2	2.5	45.9	1.2	2.9	37.6	1.3	3.4	31.3	1.3	3.9
115	235.0	0.9	0.8	164.5	0.9	1.1	120.1	1.0	1.5	93.0	1.0	1.8	73.5	1.1	2.2	59.0	1.2	2.5	48.0	1.2	2.9	39.3	1.3	3.4	32.7	1.3	3.9
120	245.2	0.9	0.8	171.7	0.9	1.1	125.3	1.0	1.5	97.1	1.0	1.8	76.7	1.1	2.2	61.5	1.2	2.5	49.9	1.2	3.0	41.0	1.3	3.4	34.2	1.3	3.9
125	255.5	0.9	0.8	178.8	0.9	1.1	130.5	1.0	1.5	101.1	1.0	1.8	79.9	1.1	2.2	64.1	1.2	2.5	52.0	1.2	3.0	42.7	1.3	3.4	35.6	1.3	3.9
130	265.7	0.9	0.8	186.0	0.9	1.1	135.8	1.0	1.5	105.1	1.0	1.8	83.0	1.1	2.2	66.7	1.2	2.5	54.1	1.2	3.0	44.4	1.3	3.4	37.0	1.3	3.9
135	275.9	0.9	0.8	193.1	0.9	1.1	141.0	1.0	1.5	109.2	1.0	1.8	86.2	1.1	2.2	69.2	1.2	2.5	56.1	1.2	3.0	46.1	1.3	3.4	38.4	1.3	3.9
140	286.1	0.9	0.8	200.3	0.9	1.1	146.2	1.0	1.5	113.2	1.0	1.8	89.4	1.1	2.2	71.8	1.2	2.5	58.2	1.2	3.0	47.8	1.3	3.4	39.9	1.3	3.9
145	296.3	0.9	0.8	207.4	0.9	1.1	151.4	1.0	1.5	117.3	1.0	1.8	92.6	1.1	2.2	74.4	1.2	2.5	60.3	1.2	3.0	49.6	1.3	3.4	41.3	1.3	3.9
150	306.5	0.9	0.8	214.6	0.9	1.1	156.7	1.0	1.5	121.3	1.0	1.8	95.8	1.1	2.2	76.9	1.2	2.5	62.4	1.2	3.0	51.3	1.3	3.4	42.7	1.3	3.9

RETARDANCE "D" AND "B"

NOTE: Width and Depth dimensions are in feet; Velocity measurements are in feet per second; Depth "D" does not include allowance for freeboard or settlement.

Table DV-7 Parabolic Diversion Design Chart (Retardance "D" and "B", Grade 6.00%)

V1 FOR RETARDANCE "D", TOP WIDTH (T), DEPTH (D), AND V2 FOR RETARDANCE "B"

Grade 6.00 Percent

Q CFS	V1=2.0			V1=2.5			V1=3.0			V1=3.5			V1=4.0			V1=4.5			V1=5.0			V1=5.5			V1=6.0		
	T	D	V2	T	D	V2	T	D	V2	T	D	V2	T	D	V2	T	D	V2	T	D	V2	T	D	V2	T	D	V2
5	12.4	0.7	0.8	8.7	0.8	1.0	6.2	0.9	1.4	4.7	1.0	1.8	3.5	1.2	1.9												
10	24.7	0.7	0.8	17.6	0.8	1.0	12.8	0.9	1.4	9.8	0.9	1.7	7.8	1.0	2.0	6.2	1.0	2.3	4.9	1.1	2.7						
15	37.1	0.7	0.8	26.4	0.8	1.1	19.2	0.8	1.4	15.0	0.9	1.7	11.8	0.9	2.0	9.5	1.0	2.4	7.7	1.1	2.7	6.2	1.2	3.1	5.0	1.3	3.5
20	49.4	0.7	0.8	35.1	0.8	1.1	25.6	0.8	1.4	19.9	0.9	1.7	16.0	0.9	2.0	12.9	1.0	2.4	10.4	1.0	2.8	8.5	1.1	3.2	7.0	1.2	3.6
25	61.8	0.7	0.8	43.9	0.8	1.1	32.0	0.8	1.4	24.9	0.9	1.7	19.9	0.9	2.0	16.1	1.0	2.4	13.1	1.0	2.8	10.8	1.1	3.2	8.9	1.2	3.6
30	74.1	0.7	0.8	52.7	0.8	1.1	38.4	0.8	1.4	29.9	0.9	1.7	23.8	0.9	2.1	19.3	1.0	2.4	15.9	1.0	2.8	13.0	1.1	3.2	10.8	1.1	3.6
35	86.5	0.7	0.8	61.5	0.8	1.1	44.8	0.8	1.4	34.8	0.9	1.7	27.8	0.9	2.1	22.5	1.0	2.4	18.5	1.0	2.8	15.4	1.1	3.2	12.7	1.1	3.6
40	98.9	0.7	0.8	70.2	0.8	1.1	51.2	0.8	1.4	39.8	0.9	1.7	31.8	0.9	2.1	25.7	1.0	2.4	21.2	1.0	2.8	17.6	1.1	3.2	14.5	1.1	3.6
45	111.2	0.7	0.8	79.0	0.8	1.1	57.6	0.8	1.4	44.8	0.9	1.7	35.7	0.9	2.1	29.0	1.0	2.4	23.8	1.0	2.8	19.8	1.1	3.2	16.6	1.1	3.6
50	123.6	0.7	0.8	87.8	0.8	1.1	64.0	0.8	1.4	49.7	0.9	1.7	39.7	0.9	2.1	32.2	1.0	2.4	26.4	1.0	2.8	22.0	1.1	3.2	18.4	1.1	3.6
55	136.9	0.7	0.8	96.6	0.8	1.1	70.4	0.8	1.4	54.7	0.9	1.7	43.6	0.9	2.1	35.4	1.0	2.4	29.1	1.0	2.8	24.2	1.1	3.2	20.2	1.1	3.7
60	148.3	0.7	0.8	105.3	0.8	1.1	76.8	0.8	1.4	59.7	0.9	1.7	47.6	0.9	2.1	38.6	1.0	2.4	31.7	1.0	2.8	26.3	1.1	3.2	22.0	1.1	3.7
65	160.6	0.7	0.8	114.1	0.8	1.1	83.2	0.8	1.4	64.7	0.9	1.7	51.6	0.9	2.1	41.8	1.0	2.4	34.3	1.0	2.8	28.5	1.1	3.2	23.8	1.1	3.7
70	173.0	0.7	0.8	122.9	0.8	1.1	89.6	0.8	1.4	69.6	0.9	1.7	55.5	0.9	2.1	45.0	1.0	2.4	37.0	1.0	2.8	30.7	1.1	3.2	25.6	1.1	3.7
75	185.4	0.7	0.8	131.7	0.8	1.1	96.0	0.8	1.4	74.6	0.9	1.7	59.5	0.9	2.1	48.2	1.0	2.4	39.6	1.0	2.8	32.9	1.1	3.2	27.4	1.1	3.7
80	197.7	0.7	0.8	140.4	0.8	1.1	102.3	0.8	1.4	79.6	0.9	1.7	63.5	0.9	2.1	51.4	1.0	2.4	42.2	1.0	2.8	35.1	1.1	3.2	29.3	1.1	3.7
85	210.1	0.7	0.8	149.2	0.8	1.1	108.7	0.8	1.4	84.5	0.9	1.7	67.4	0.9	2.1	54.7	1.0	2.4	44.9	1.0	2.8	37.3	1.1	3.2	31.1	1.1	3.7
90	222.4	0.7	0.8	158.0	0.8	1.1	115.1	0.8	1.4	89.5	0.9	1.7	71.4	0.9	2.1	57.9	1.0	2.4	47.5	1.0	2.8	39.5	1.1	3.2	32.9	1.1	3.7
95	234.8	0.7	0.8	166.8	0.8	1.1	121.5	0.8	1.4	94.5	0.9	1.7	75.4	0.9	2.1	61.1	1.0	2.4	50.2	1.0	2.8	41.7	1.1	3.2	34.7	1.1	3.7
100	247.1	0.7	0.8	175.5	0.8	1.1	127.9	0.8	1.4	99.5	0.9	1.7	79.3	0.9	2.1	64.3	1.0	2.4	52.8	1.0	2.8	43.9	1.1	3.2	36.6	1.1	3.7
105	259.5	0.7	0.8	184.3	0.8	1.1	134.3	0.8	1.4	104.4	0.9	1.7	83.3	0.9	2.1	67.5	1.0	2.4	55.4	1.0	2.8	46.1	1.1	3.2	38.4	1.1	3.7
110	271.8	0.7	0.8	193.1	0.8	1.1	140.7	0.8	1.4	109.4	0.9	1.7	87.3	0.9	2.1	70.7	1.0	2.4	58.1	1.0	2.8	48.2	1.1	3.2	40.2	1.1	3.7
115	284.2	0.7	0.8	201.9	0.8	1.1	147.1	0.8	1.4	114.4	0.9	1.7	91.2	0.9	2.1	73.9	1.0	2.4	60.7	1.0	2.8	50.4	1.1	3.2	42.0	1.1	3.7
120	296.6	0.7	0.8	210.7	0.8	1.1	153.5	0.8	1.4	119.3	0.9	1.7	95.2	0.9	2.1	77.2	1.0	2.4	63.3	1.0	2.8	52.6	1.1	3.2	43.9	1.1	3.7
125	308.9	0.7	0.8	219.4	0.8	1.1	159.9	0.8	1.4	124.3	0.9	1.7	99.2	0.9	2.1	80.4	1.0	2.4	66.0	1.0	2.8	54.8	1.1	3.2	45.7	1.1	3.7
130	321.3	0.7	0.8	228.2	0.8	1.1	166.3	0.8	1.4	129.3	0.9	1.7	103.1	0.9	2.1	83.6	1.0	2.4	68.6	1.0	2.8	57.0	1.1	3.2	47.5	1.1	3.7
135	333.6	0.7	0.8	237.0	0.8	1.1	172.7	0.8	1.4	134.3	0.9	1.7	107.1	0.9	2.1	86.8	1.0	2.4	71.3	1.0	2.8	59.2	1.1	3.2	49.3	1.1	3.7
140	346.0	0.7	0.8	245.8	0.8	1.1	179.1	0.8	1.4	139.2	0.9	1.7	111.0	0.9	2.1	90.0	1.0	2.4	73.9	1.0	2.8	61.4	1.1	3.2	51.2	1.1	3.7
145	358.3	0.7	0.8	254.5	0.8	1.1	185.5	0.8	1.4	144.2	0.9	1.7	115.0	0.9	2.1	93.2	1.0	2.4	76.5	1.0	2.8	63.6	1.1	3.2	53.0	1.1	3.7
150	370.7	0.7	0.8	263.3	0.8	1.1	191.9	0.8	1.4	149.2	0.9	1.7	119.0	0.9	2.1	96.4	1.0	2.4	79.2	1.0	2.8	65.8	1.1	3.2	54.8	1.1	3.7

RETARDANCE "D" AND "B"

NOTE: Width and Depth dimensions are in feet; Velocity measurements are in feet per second; Depth "D" does not include allowance for freeboard or settlement.

Table DV-8 Parabolic Diversion Design Chart (Retardance "D" and "B", Grade 8.00%)

V1 FOR RETARDANCE "D", TOP WIDTH (T), DEPTH (D), AND V2 FOR RETARDANCE "B"

Grade 8.00 Percent

Q CFS	V1=2.0			V1=2.5			V1=3.0			V1=3.5			V1=4.0			V1=4.5			V1=5.0			V1=5.5			V1=6.0		
	T	D	V2	T	D	V2	T	D	V2	T	D	V2	T	D	V2	T	D	V2	T	D	V2	T	D	V2	T	D	V2
5	14.0	0.7	0.8	10.1	0.7	1.0	7.4	0.8	1.3	5.5	0.8	1.6	4.4	0.9	1.9	3.4	1.0	2.1									
10	28.0	0.7	0.8	20.1	0.7	1.0	15.0	0.8	1.3	11.3	0.8	1.7	9.1	0.8	2.0	7.4	0.9	2.3	6.0	0.9	2.6	4.9	1.0	3.0	3.6	1.2	3.3
15	41.9	0.7	0.8	30.1	0.7	1.0	22.4	0.8	1.3	17.0	0.8	1.7	13.9	0.8	2.0	11.4	0.9	2.3	9.2	0.9	2.7	7.6	1.0	3.0	6.3	1.0	3.4
20	55.9	0.7	0.8	40.1	0.7	1.0	29.9	0.8	1.3	22.6	0.8	1.7	18.5	0.8	2.0	15.1	0.9	2.3	12.5	0.9	2.7	10.2	1.0	3.1	8.5	1.0	3.5
25	69.9	0.7	0.8	50.1	0.7	1.0	37.3	0.8	1.3	28.2	0.8	1.7	23.1	0.8	2.0	18.8	0.9	2.3	15.6	0.9	2.7	13.0	0.9	3.1	10.6	1.0	3.5
30	83.9	0.7	0.8	60.1	0.7	1.0	44.8	0.8	1.3	33.9	0.8	1.7	27.7	0.8	2.0	22.6	0.9	2.3	18.8	0.9	2.7	15.6	0.9	3.1	13.0	1.0	3.5
35	97.9	0.7	0.8	70.1	0.7	1.0	52.3	0.8	1.3	39.5	0.8	1.7	32.3	0.8	2.0	26.3	0.9	2.3	21.7	0.9	2.7	18.2	0.9	3.1	15.3	1.0	3.5
40	111.8	0.7	0.8	80.2	0.7	1.0	59.7	0.8	1.3	45.1	0.8	1.7	36.9	0.8	2.0	30.1	0.9	2.3	24.8	0.9	2.7	20.8	0.9	3.1	17.5	1.0	3.5
45	125.8	0.7	0.8	90.2	0.7	1.0	67.2	0.8	1.3	50.8	0.8	1.7	41.5	0.8	2.0	33.8	0.9	2.3	27.9	0.9	2.7	23.3	0.9	3.1	19.7	1.0	3.5
50	139.8	0.7	0.8	100.2	0.7	1.0	74.7	0.8	1.3	56.4	0.8	1.7	46.1	0.8	2.0	37.6	0.9	2.3	31.0	0.9	2.7	25.9	0.9	3.1	21.9	1.0	3.5
55	153.8	0.7	0.8	110.2	0.7	1.0	82.1	0.8	1.3	62.1	0.8	1.7	50.7	0.8	2.0	41.3	0.9	2.3	34.1	0.9	2.7	28.5	0.9	3.1	24.0	1.0	3.5
60	167.8	0.7	0.8	120.2	0.7	1.0	89.6	0.8	1.3	67.7	0.8	1.7	55.3	0.8	2.0	45.1	0.9	2.3	37.2	0.9	2.7	31.1	0.9	3.1	26.2	1.0	3.5
65	181.7	0.7	0.8	130.3	0.7	1.0	97.0	0.8	1.3	73.3	0.8	1.7	60.0	0.8	2.0	48.8	0.9	2.3	40.3	0.9	2.7	33.7	0.9	3.1	28.4	1.0	3.5
70	195.7	0.7	0.8	140.3	0.7	1.0	104.5	0.8	1.3	79.0	0.8	1.7	64.6	0.8	2.0	52.6	0.9	2.3	43.4	0.9	2.7	36.3	0.9	3.1	30.6	1.0	3.5
75	209.7	0.7	0.8	150.3	0.7	1.0	112.0	0.8	1.3	84.6	0.8	1.7	69.2	0.8	2.0	56.3	0.9	2.3	46.6	0.9	2.7	38.9	0.9	3.1	32.8	1.0	3.5
80	223.7	0.7	0.8	160.3	0.7	1.0	119.4	0.8	1.3	90.3	0.8	1.7	73.8	0.8	2.0	60.1	0.9	2.3	49.8	0.9	2.7	41.4	0.9	3.1	35.0	1.0	3.5
85	237.7	0.7	0.8	170.3	0.7	1.0	126.9	0.8	1.3	95.9	0.8	1.7	78.4	0.8	2.0	63.8	0.9	2.3	52.7	0.9	2.7	44.0	0.9	3.1	37.1	1.0	3.5
90	251.6	0.7	0.8	180.3	0.7	1.0	134.4	0.8	1.3	101.6	0.8	1.7	83.0	0.8	2.0	67.6	0.9	2.3	55.8	0.9	2.7	46.6	0.9	3.1	39.3	1.0	3.5
95	265.6	0.7	0.8	190.4	0.7	1.0	141.8	0.8	1.3	107.2	0.8	1.7	87.6	0.8	2.0	71.3	0.9	2.3	58.9	0.9	2.7	49.2	0.9	3.1	41.5	1.0	3.5
100	279.6	0.7	0.8	200.4	0.7	1.0	149.3	0.8	1.3	112.8	0.8	1.7	92.2	0.8	2.0	75.1	0.9	2.3	62.0	0.9	2.7	51.8	0.9	3.1	43.7	1.0	3.5
105	293.6	0.7	0.8	210.4	0.7	1.0	156.8	0.8	1.3	118.5	0.8	1.7	96.8	0.8	2.0	78.9	0.9	2.3	65.1	0.9	2.7	54.4	0.9	3.1	45.9	1.0	3.5
110	307.6	0.7	0.8	220.4	0.7	1.0	164.2	0.8	1.3	124.1	0.8	1.7	101.4	0.8	2.0	82.6	0.9	2.3	68.2	0.9	2.7	57.0	0.9	3.1	48.0	1.0	3.5
115	321.5	0.7	0.8	230.4	0.7	1.0	171.7	0.8	1.3	129.8	0.8	1.7	106.1	0.8	2.0	86.4	0.9	2.3	71.3	0.9	2.7	59.6	0.9	3.1	50.2	1.0	3.5
120	335.5	0.7	0.8	240.5	0.7	1.0	179.1	0.8	1.3	135.4	0.8	1.7	110.7	0.8	2.0	90.1	0.9	2.3	74.4	0.9	2.7	62.2	0.9	3.1	52.4	1.0	3.5
125	349.5	0.7	0.8	250.5	0.7	1.0	186.6	0.8	1.3	141.0	0.8	1.7	115.3	0.8	2.0	93.9	0.9	2.3	77.5	0.9	2.7	64.7	0.9	3.1	54.6	1.0	3.5
130	363.5	0.7	0.8	260.5	0.7	1.0	194.1	0.8	1.3	146.7	0.8	1.7	119.9	0.8	2.0	97.6	0.9	2.3	80.6	0.9	2.7	67.3	0.9	3.1	56.8	1.0	3.5
135	377.5	0.7	0.8	270.5	0.7	1.0	201.5	0.8	1.3	152.3	0.8	1.7	124.5	0.8	2.0	101.4	0.9	2.3	83.7	0.9	2.7	69.9	0.9	3.1	59.0	1.0	3.5
140	391.5	0.7	0.8	280.5	0.7	1.0	209.0	0.8	1.3	158.0	0.8	1.7	129.1	0.8	2.0	105.1	0.9	2.3	86.8	0.9	2.7	72.5	0.9	3.1	61.1	1.0	3.5
145	405.4	0.7	0.8	290.6	0.7	1.0	216.5	0.8	1.3	163.6	0.8	1.7	133.7	0.8	2.0	108.9	0.9	2.3	89.9	0.9	2.7	75.1	0.9	3.1	63.3	1.0	3.5
150	419.4	0.7	0.8	300.6	0.7	1.0	223.9	0.8	1.3	169.3	0.8	1.7	138.3	0.8	2.0	112.6	0.9	2.3	93.0	0.9	2.7	77.7	0.9	3.1	65.5	1.0	3.5

RETARDANCE "D" AND "B"

NOTE: Width and Depth dimensions are in feet; Velocity measurements are in feet per second;
Depth "D" does not include allowance for freeboard or settlement.

Table DV-9 Parabolic Diversion Design Chart (Retardance "D" and "B", Grade 10.00%)

V1 FOR RETARDANCE "D", TOP WIDTH (T), DEPTH (D), AND V2 FOR RETARDANCE "B"

Grade 10.00 Percent

Q CFS	V1=2.0			V1=2.5			V1=3.0			V1=3.5			V1=4.0			V1=4.5			V1=5.0			V1=5.5			V1=6.0		
	T	D	V2	T	D	V2	T	D	V2	T	D	V2	T	D	V2	T	D	V2	T	D	V2	T	D	V2	T	D	V2
5	15.3	0.6	0.8	11.1	0.7	1.0	8.1	0.7	1.3	6.3	0.7	1.6	4.8	0.8	1.9	4.0	0.9	2.2	3.1	1.0	2.4						
10	30.6	0.6	0.8	22.1	0.7	1.0	16.5	0.7	1.3	12.8	0.7	1.6	10.0	0.8	2.0	8.4	0.8	2.2	6.9	0.8	2.6	5.7	0.9	2.9	4.7	1.0	3.3
15	45.9	0.6	0.8	33.2	0.7	1.0	24.7	0.7	1.3	19.2	0.7	1.6	15.0	0.8	2.0	12.7	0.8	2.2	10.5	0.8	2.6	8.7	0.9	3.0	7.3	0.9	3.3
20	61.2	0.6	0.8	44.2	0.7	1.0	32.9	0.7	1.3	25.6	0.7	1.6	20.0	0.8	2.0	17.0	0.8	2.2	14.1	0.8	2.6	11.8	0.9	3.0	9.8	0.9	3.4
25	76.5	0.6	0.8	55.3	0.7	1.0	41.1	0.7	1.3	32.0	0.7	1.6	25.0	0.8	2.0	21.2	0.8	2.3	17.6	0.8	2.6	14.7	0.9	3.0	12.5	0.9	3.4
30	91.8	0.6	0.8	66.3	0.7	1.0	49.3	0.7	1.3	38.3	0.7	1.6	29.9	0.8	2.0	25.4	0.8	2.3	21.1	0.8	2.6	17.7	0.8	3.0	15.0	0.9	3.3
35	107.1	0.6	0.8	77.4	0.7	1.0	57.5	0.7	1.3	44.7	0.7	1.6	34.9	0.8	2.0	29.7	0.8	2.3	24.6	0.8	2.6	20.6	0.8	3.0	17.5	0.9	3.4
40	122.4	0.6	0.8	88.4	0.7	1.0	65.7	0.7	1.3	51.1	0.7	1.6	39.9	0.8	2.0	33.9	0.8	2.3	28.1	0.8	2.6	23.5	0.8	3.0	20.0	0.9	3.4
45	137.8	0.6	0.8	99.5	0.7	1.0	73.9	0.7	1.3	57.5	0.7	1.6	44.9	0.8	2.0	38.0	0.8	2.3	31.6	0.8	2.6	26.5	0.8	3.0	22.5	0.9	3.4
50	153.1	0.6	0.8	110.6	0.7	1.0	82.1	0.7	1.3	63.9	0.7	1.6	49.9	0.8	2.0	42.2	0.8	2.3	35.1	0.8	2.6	29.4	0.8	3.0	25.0	0.9	3.4
55	168.4	0.6	0.8	121.6	0.7	1.0	90.3	0.7	1.3	70.3	0.7	1.6	54.9	0.8	2.0	46.4	0.8	2.3	38.6	0.8	2.6	32.3	0.8	3.0	27.5	0.9	3.4
60	183.7	0.6	0.8	132.7	0.7	1.0	98.5	0.7	1.3	76.7	0.7	1.6	59.9	0.8	2.0	50.7	0.8	2.3	42.1	0.8	2.6	35.3	0.8	3.0	30.0	0.9	3.4
65	199.0	0.6	0.8	143.7	0.7	1.0	106.7	0.7	1.3	83.1	0.7	1.6	64.8	0.8	2.0	54.9	0.8	2.3	45.6	0.8	2.6	38.2	0.8	3.0	32.5	0.9	3.4
70	214.3	0.6	0.8	154.8	0.7	1.0	115.0	0.7	1.3	89.4	0.7	1.6	69.8	0.8	2.0	59.1	0.8	2.3	49.1	0.8	2.6	41.2	0.8	3.0	35.0	0.9	3.4
75	229.6	0.6	0.8	165.8	0.7	1.0	123.2	0.7	1.3	95.8	0.7	1.6	74.8	0.8	2.0	63.3	0.8	2.3	52.6	0.8	2.6	44.1	0.8	3.0	37.4	0.9	3.4
80	244.9	0.6	0.8	176.9	0.7	1.0	131.4	0.7	1.3	102.2	0.7	1.6	79.8	0.8	2.0	67.6	0.8	2.3	56.1	0.8	2.6	47.0	0.8	3.0	39.8	0.9	3.4
85	260.2	0.6	0.8	187.9	0.7	1.0	139.6	0.7	1.3	108.6	0.7	1.6	84.8	0.8	2.0	71.8	0.8	2.3	59.6	0.8	2.6	50.0	0.8	3.0	42.3	0.9	3.4
90	275.5	0.6	0.8	199.0	0.7	1.0	147.8	0.7	1.3	115.0	0.7	1.6	89.8	0.8	2.0	76.0	0.8	2.3	63.1	0.8	2.6	52.9	0.8	3.0	44.8	0.9	3.4
95	290.8	0.6	0.8	210.0	0.7	1.0	156.0	0.7	1.3	121.4	0.7	1.6	94.8	0.8	2.0	80.2	0.8	2.3	66.6	0.8	2.6	55.8	0.8	3.0	47.3	0.9	3.4
100	306.1	0.6	0.8	221.1	0.7	1.0	164.2	0.7	1.3	127.8	0.7	1.6	99.8	0.8	2.0	84.4	0.8	2.3	70.1	0.8	2.6	58.8	0.8	3.0	49.7	0.9	3.4
105	321.4	0.6	0.8	232.2	0.7	1.0	172.4	0.7	1.3	134.2	0.7	1.6	104.7	0.8	2.0	88.7	0.8	2.3	73.6	0.8	2.6	61.7	0.8	3.0	52.2	0.9	3.4
110	336.7	0.6	0.8	243.2	0.7	1.0	180.6	0.7	1.3	140.5	0.7	1.6	109.7	0.8	2.0	92.9	0.8	2.3	77.1	0.8	2.6	64.7	0.8	3.0	54.7	0.9	3.4
115	352.0	0.6	0.8	254.3	0.7	1.0	188.8	0.7	1.3	146.9	0.7	1.6	114.7	0.8	2.0	97.1	0.8	2.3	80.6	0.8	2.6	67.6	0.8	3.0	57.2	0.9	3.4
120	367.3	0.6	0.8	265.3	0.7	1.0	197.1	0.7	1.3	153.3	0.7	1.6	119.7	0.8	2.0	101.3	0.8	2.3	84.1	0.8	2.6	70.5	0.8	3.0	59.7	0.9	3.4
125	382.6	0.6	0.8	276.4	0.7	1.0	205.3	0.7	1.3	159.7	0.7	1.6	124.7	0.8	2.0	105.5	0.8	2.3	87.6	0.8	2.6	73.5	0.8	3.0	62.2	0.9	3.4
130	397.9	0.6	0.8	287.4	0.7	1.0	213.5	0.7	1.3	166.1	0.7	1.6	129.7	0.8	2.0	109.8	0.8	2.3	91.1	0.8	2.6	76.4	0.8	3.0	64.7	0.9	3.4
135	413.2	0.6	0.8	298.5	0.7	1.0	221.7	0.7	1.3	172.5	0.7	1.6	134.7	0.8	2.0	114.0	0.8	2.3	94.6	0.8	2.6	79.3	0.8	3.0	67.2	0.9	3.4
140	428.6	0.6	0.8	309.5	0.7	1.0	229.9	0.7	1.3	178.9	0.7	1.6	139.7	0.8	2.0	118.2	0.8	2.3	98.1	0.8	2.6	82.3	0.8	3.0	69.6	0.9	3.4
145	443.9	0.6	0.8	320.6	0.7	1.0	238.1	0.7	1.3	185.3	0.7	1.6	144.6	0.8	2.0	122.4	0.8	2.3	101.7	0.8	2.6	85.2	0.8	3.0	72.1	0.9	3.4
150	459.2	0.6	0.8	331.7	0.7	1.0	246.3	0.7	1.3	191.6	0.7	1.6	149.6	0.8	2.0	126.7	0.8	2.3	105.2	0.8	2.6	88.2	0.9	3.0	74.6	0.9	3.4

RETARDANCE "D" AND "B"

NOTE: Width and Depth dimensions are in feet; Velocity measurements are in feet per second; Depth "D" does not include allowance for freeboard or settlement.

Table DV-10 Parabolic Diversion Design Chart (Retardance "D" and "C", Grade .50%)

V1 FOR RETARDANCE "D", TOP WIDTH (T), DEPTH (D), AND V2 FOR RETARDANCE "C"

Grade 0.50 Percent

Q CFS	V1=2.0			V1=2.5			V1=3.0			V1=3.5			V1=4.0			V1=4.5			V1=5.0			V1=5.5			V1=6.0		
	T	D	V2	T	D	V2	T	D	V2	T	D	V2	T	D	V2	T	D	V2	T	D	V2	T	D	V2	T	D	V2
5																											
10																											
15	8.4	1.6	1.7																								
20	11.7	1.5	1.7	7.1	2.0	2.2																					
25	14.9	1.5	1.7	9.7	1.8	2.2																					
30	18.0	1.5	1.7	12.0	1.7	2.2																					
35	21.0	1.5	1.7	14.2	1.7	2.2	9.3	2.1	2.7																		
40	24.4	1.5	1.7	16.3	1.7	2.2	10.9	2.0	2.7																		
45	27.4	1.5	1.7	18.5	1.7	2.2	12.5	2.0	2.7																		
50	30.5	1.5	1.7	20.6	1.7	2.2	14.1	1.9	2.7	8.7	2.6	3.3															
55	33.5	1.5	1.7	22.7	1.7	2.2	15.7	1.9	2.7	10.4	2.4	3.3															
60	36.6	1.5	1.7	24.8	1.7	2.2	17.2	1.9	2.7	11.7	2.3	3.3															
65	39.6	1.5	1.7	27.3	1.7	2.2	18.8	1.9	2.7	12.9	2.3	3.3															
70	42.6	1.5	1.7	29.4	1.7	2.2	20.3	1.9	2.7	14.0	2.2	3.3	9.8	2.8	3.8												
75	45.7	1.5	1.7	31.4	1.7	2.2	21.8	1.9	2.7	15.2	2.2	3.3	11.3	2.7	3.8												
80	48.7	1.5	1.7	33.5	1.7	2.2	23.3	1.9	2.7	16.3	2.2	3.3	12.2	2.6	3.8												
85	51.7	1.5	1.7	35.6	1.6	2.2	24.8	1.9	2.7	17.4	2.2	3.3	13.2	2.5	3.8												
90	54.8	1.5	1.7	37.7	1.6	2.2	26.3	1.9	2.7	18.5	2.2	3.3	14.2	2.5	3.8												
95	57.8	1.5	1.7	39.8	1.6	2.2	27.8	1.9	2.7	19.6	2.2	3.3	15.1	2.5	3.8												
100	60.9	1.5	1.7	41.9	1.6	2.2	29.7	1.9	2.7	20.7	2.2	3.3	16.0	2.5	3.8	11.0	3.2	4.3									
105	63.9	1.5	1.7	44.0	1.6	2.2	31.2	1.9	2.7	21.8	2.2	3.3	16.9	2.5	3.8	12.3	3.0	4.3									
110	66.9	1.5	1.7	46.1	1.6	2.2	32.6	1.9	2.7	22.9	2.2	3.3	17.8	2.4	3.8	13.1	2.9	4.3									
115	70.0	1.5	1.7	48.1	1.6	2.2	34.1	1.9	2.7	24.0	2.1	3.3	18.7	2.4	3.8	13.9	2.9	4.3									
120	73.0	1.5	1.7	50.2	1.6	2.2	35.6	1.9	2.7	25.1	2.1	3.3	19.6	2.4	3.8	14.6	2.9	4.3									
125	76.1	1.5	1.7	52.3	1.6	2.2	37.1	1.9	2.7	26.2	2.1	3.3	20.5	2.4	3.8	15.4	2.8	4.3									
130	79.1	1.5	1.7	54.4	1.6	2.2	38.5	1.9	2.7	27.3	2.1	3.3	21.3	2.4	3.8	16.1	2.8	4.3									
135	82.1	1.5	1.7	56.5	1.6	2.2	40.0	1.9	2.7	28.4	2.1	3.3	22.2	2.4	3.8	16.9	2.8	4.3									
140	85.2	1.5	1.7	58.6	1.6	2.2	41.5	1.9	2.7	29.4	2.1	3.3	23.1	2.4	3.8	17.6	2.8	4.3									
145	88.2	1.5	1.7	60.7	1.6	2.2	43.0	1.9	2.7	30.5	2.1	3.3	24.0	2.4	3.8	18.3	2.8	4.3	12.3	3.7	4.9						
150	91.3	1.5	1.7	62.8	1.6	2.2	44.5	1.9	2.7	31.6	2.1	3.3	24.8	2.4	3.8	19.0	2.7	4.3	13.1	3.5	4.9						

RETARDANCE "D" AND "C"

NOTE: Width and Depth dimensions are in feet; Velocity measurements are in feet per second; Depth "D" does not include allowance for freeboard or settlement.

Table DV-11 Parabolic Diversion Design Chart (Retardance "D" and "C", Grade 1.00%)

V1 FOR RETARDANCE "D", TOP WIDTH (T), DEPTH (D), AND V2 FOR RETARDANCE "C"

Grade 1.00 Percent

Q CFS	V1=2.0			V1=2.5			V1=3.0			V1=3.5			V1=4.0			V1=4.5			V1=5.0			V1=5.5			V1=6.0		
	T	D	V2	T	D	V2	T	D	V2	T	D	V2	T	D	V2	T	D	V2	T	D	V2	T	D	V2	T	D	V2
5																											
10	8.2	1.2	1.6	5.2	1.4	2.0																					
15	12.6	1.1	1.6	8.7	1.3	2.1	5.5	1.6	2.6																		
20	17.1	1.1	1.6	11.8	1.2	2.1	8.2	1.4	2.6																		
25	21.4	1.1	1.6	14.9	1.2	2.1	10.5	1.4	2.6	7.3	1.6	3.1															
30	25.7	1.1	1.6	18.0	1.2	2.1	12.8	1.4	2.6	9.1	1.6	3.2															
35	29.9	1.1	1.6	21.2	1.2	2.1	15.0	1.3	2.6	10.9	1.5	3.1	7.8	1.8	3.7												
40	34.2	1.1	1.6	24.3	1.2	2.1	17.3	1.3	2.6	12.6	1.5	3.1	9.2	1.7	3.7												
45	38.5	1.1	1.6	27.3	1.2	2.1	19.5	1.3	2.6	14.3	1.5	3.1	10.6	1.7	3.7	7.2	2.2	4.3									
50	42.7	1.1	1.6	30.3	1.2	2.1	21.9	1.3	2.6	16.0	1.5	3.2	11.9	1.7	3.7	8.8	2.0	4.3									
55	47.0	1.1	1.6	33.3	1.2	2.1	24.1	1.3	2.6	17.7	1.5	3.2	13.3	1.7	3.7	9.9	1.9	4.3									
60	51.3	1.1	1.6	36.3	1.2	2.1	26.3	1.3	2.6	19.3	1.5	3.2	14.6	1.7	3.7	11.0	1.9	4.3									
65	55.5	1.1	1.6	39.4	1.2	2.1	28.5	1.3	2.6	21.0	1.5	3.2	15.9	1.6	3.7	12.1	1.9	4.3	8.0	2.5	4.9						
70	59.8	1.1	1.6	42.4	1.2	2.1	30.7	1.3	2.6	22.7	1.5	3.2	17.1	1.6	3.7	13.2	1.9	4.3	9.5	2.3	4.8						
75	64.1	1.1	1.6	45.4	1.2	2.1	32.9	1.3	2.6	24.6	1.5	3.1	18.5	1.6	3.7	14.2	1.8	4.3	10.4	2.2	4.9						
80	68.3	1.1	1.6	48.4	1.2	2.1	35.0	1.3	2.6	26.2	1.5	3.1	19.8	1.6	3.7	15.2	1.8	4.3	11.3	2.2	4.9						
85	72.6	1.1	1.6	51.5	1.2	2.1	37.2	1.3	2.6	27.9	1.5	3.1	21.0	1.6	3.7	16.3	1.8	4.3	12.1	2.2	4.9	8.8	2.7	5.4			
90	76.9	1.1	1.6	54.5	1.2	2.1	39.4	1.3	2.6	29.5	1.5	3.1	22.3	1.6	3.7	17.3	1.8	4.3	13.0	2.1	4.9	9.8	2.6	5.4			
95	81.1	1.1	1.6	57.5	1.2	2.1	41.6	1.3	2.6	31.1	1.5	3.1	23.6	1.6	3.7	18.3	1.8	4.3	13.8	2.1	4.9	10.9	2.5	5.3			
100	85.4	1.1	1.6	60.5	1.2	2.1	43.8	1.3	2.6	32.7	1.5	3.1	24.9	1.6	3.7	19.3	1.8	4.3	14.6	2.1	4.9	11.6	2.4	5.4			
105	89.7	1.1	1.6	63.6	1.2	2.1	46.0	1.3	2.6	34.4	1.5	3.1	26.5	1.6	3.7	20.3	1.8	4.3	15.4	2.1	4.9	12.4	2.4	5.4	9.7	2.8	5.8
110	94.0	1.1	1.6	66.6	1.2	2.1	48.2	1.3	2.6	36.0	1.5	3.1	27.7	1.6	3.7	21.3	1.8	4.3	16.2	2.1	4.9	13.1	2.4	5.4	10.8	2.6	5.8
115	98.2	1.1	1.6	69.6	1.2	2.1	50.4	1.3	2.6	37.6	1.5	3.1	29.0	1.6	3.7	22.3	1.8	4.3	17.0	2.1	4.9	13.8	2.3	5.4	11.5	2.6	5.8
120	102.5	1.1	1.6	72.6	1.2	2.1	52.5	1.3	2.6	39.3	1.5	3.1	30.2	1.6	3.7	23.3	1.8	4.3	17.9	2.1	4.9	14.5	2.3	5.4	12.2	2.6	5.8
125	106.8	1.1	1.6	75.7	1.2	2.1	54.7	1.3	2.6	40.9	1.5	3.1	31.5	1.6	3.7	24.3	1.8	4.3	18.7	2.1	4.9	15.2	2.3	5.4	12.8	2.5	5.8
130	111.0	1.1	1.6	78.7	1.2	2.1	56.9	1.3	2.6	42.5	1.5	3.1	32.7	1.6	3.7	25.3	1.8	4.3	19.4	2.1	4.9	15.9	2.3	5.4	13.4	2.5	5.8
135	115.3	1.1	1.6	81.7	1.2	2.1	59.1	1.3	2.6	44.2	1.5	3.1	34.0	1.6	3.7	26.3	1.8	4.3	20.2	2.0	4.9	16.6	2.3	5.4	14.1	2.5	5.8
140	119.6	1.1	1.6	84.7	1.2	2.1	61.3	1.3	2.6	45.8	1.5	3.1	35.2	1.6	3.7	27.3	1.8	4.3	21.0	2.0	4.9	17.2	2.3	5.4	14.7	2.5	5.8
145	123.8	1.1	1.6	87.8	1.2	2.1	63.5	1.3	2.6	47.5	1.5	3.1	36.5	1.6	3.7	28.7	1.8	4.3	21.8	2.0	4.9	17.9	2.3	5.4	15.3	2.5	5.8
150	128.1	1.1	1.6	90.8	1.2	2.1	65.7	1.3	2.6	49.1	1.5	3.1	37.8	1.6	3.7	29.7	1.8	4.3	22.6	2.0	4.9	18.6	2.3	5.4	15.9	2.4	5.8

RETARDANCE "D" AND "C"

NOTE: Width and Depth dimensions are in feet; Velocity measurements are in feet per second; Depth "D" does not include allowance for freeboard or settlement.

Table DV-12 Parabolic Diversion Design Chart (Retardance "D" and "C", Grade 2.00%)

V1 FOR RETARDANCE "D", TOP WIDTH (T), DEPTH (D), AND V2 FOR RETARDANCE "C"

Grade 2.00 Percent

Q CFS	V1=2.0			V1=2.5			V1=3.0			V1=3.5			V1=4.0			V1=4.5			V1=5.0			V1=5.5			V1=6.0		
	T	D	V2	T	D	V2	T	D	V2	T	D	V2	T	D	V2	T	D	V2	T	D	V2	T	D	V2	T	D	V2
5	5.9	0.9	1.5																								
10	12.4	0.8	1.5	8.1	0.9	2.0	5.9	1.0	2.5																		
15	18.5	0.8	1.5	12.3	0.9	2.0	9.3	1.0	2.5	6.8	1.1	3.0	4.7	1.4	3.5												
20	24.7	0.8	1.5	16.7	0.9	2.0	12.5	1.0	2.5	9.4	1.1	3.0	7.0	1.2	3.6	4.7	1.5	4.1									
25	30.8	0.8	1.5	20.8	0.9	2.0	15.9	1.0	2.4	11.8	1.1	3.0	9.0	1.2	3.5	6.8	1.3	4.1									
30	37.0	0.8	1.5	25.0	0.9	2.0	19.0	1.0	2.5	14.3	1.1	3.0	11.0	1.2	3.5	8.5	1.3	4.1	6.4	1.5	4.7						
35	43.2	0.8	1.5	29.1	0.9	2.0	22.2	1.0	2.5	16.9	1.0	3.0	12.9	1.1	3.5	10.1	1.3	4.1	7.8	1.4	4.7						
40	49.3	0.8	1.5	33.3	0.9	2.0	25.3	1.0	2.5	19.3	1.0	3.0	14.8	1.1	3.5	11.6	1.3	4.1	9.1	1.4	4.7	7.1	1.6	5.2			
45	55.5	0.8	1.5	37.4	0.9	2.0	28.5	1.0	2.5	21.7	1.0	3.0	16.7	1.1	3.5	13.1	1.3	4.1	10.4	1.4	4.7	8.2	1.6	5.2			
50	61.7	0.8	1.5	41.6	0.9	2.0	31.7	1.0	2.5	24.1	1.0	3.0	18.8	1.1	3.5	14.7	1.2	4.1	11.7	1.4	4.7	9.3	1.5	5.3	7.1	1.8	5.8
55	67.8	0.8	1.5	45.7	0.9	2.0	34.8	1.0	2.5	26.5	1.0	3.0	20.7	1.1	3.5	16.2	1.2	4.1	12.9	1.4	4.7	10.4	1.5	5.3	8.2	1.7	5.8
60	74.0	0.8	1.5	49.9	0.9	2.0	38.0	1.0	2.5	28.9	1.0	3.0	22.6	1.1	3.5	17.7	1.2	4.1	14.1	1.4	4.7	11.4	1.5	5.3	9.2	1.7	5.8
65	80.2	0.8	1.5	54.0	0.9	2.0	41.1	1.0	2.5	31.4	1.0	3.0	24.5	1.1	3.5	19.5	1.2	4.1	15.4	1.3	4.7	12.4	1.5	5.3	10.1	1.7	5.8
70	86.3	0.8	1.5	58.2	0.9	2.0	44.3	1.0	2.5	33.8	1.0	3.0	26.3	1.1	3.5	21.0	1.2	4.1	16.6	1.3	4.7	13.5	1.5	5.3	11.0	1.6	5.8
75	92.5	0.8	1.5	62.3	0.9	2.0	47.5	1.0	2.5	36.2	1.0	3.0	28.2	1.1	3.5	22.4	1.2	4.1	17.8	1.3	4.7	14.5	1.5	5.3	11.8	1.6	5.8
80	98.7	0.8	1.5	66.5	0.9	2.0	50.6	1.0	2.5	38.6	1.0	3.0	30.1	1.1	3.5	23.9	1.2	4.1	19.0	1.3	4.7	15.5	1.5	5.3	12.7	1.6	5.8
85	104.8	0.8	1.5	70.6	0.9	2.0	53.8	1.0	2.5	41.0	1.0	3.0	32.0	1.1	3.5	25.4	1.2	4.1	20.3	1.3	4.7	16.5	1.5	5.3	13.6	1.6	5.8
90	111.0	0.8	1.5	74.8	0.9	2.0	57.0	1.0	2.5	43.4	1.0	3.0	33.8	1.1	3.5	26.9	1.2	4.1	21.8	1.3	4.6	17.5	1.5	5.3	14.4	1.6	5.8
95	117.2	0.8	1.5	78.9	0.9	2.0	60.1	1.0	2.5	45.8	1.0	3.0	35.7	1.1	3.5	28.4	1.2	4.1	23.0	1.3	4.6	18.6	1.5	5.3	15.3	1.6	5.8
100	123.3	0.8	1.5	83.1	0.9	2.0	63.3	1.0	2.5	48.2	1.0	3.0	37.6	1.1	3.5	29.9	1.2	4.1	24.2	1.3	4.6	19.6	1.5	5.3	16.2	1.6	5.8
105	129.5	0.8	1.5	87.3	0.9	2.0	66.4	1.0	2.5	50.6	1.0	3.0	39.5	1.1	3.5	31.4	1.2	4.1	25.4	1.3	4.6	20.6	1.5	5.3	17.0	1.6	5.8
110	135.7	0.8	1.5	91.4	0.9	2.0	69.6	1.0	2.5	53.0	1.0	3.0	41.3	1.1	3.5	32.9	1.2	4.1	26.6	1.3	4.7	21.6	1.4	5.3	17.9	1.6	5.8
115	141.8	0.8	1.5	95.6	0.9	2.0	72.8	1.0	2.5	55.4	1.0	3.0	43.2	1.1	3.5	34.4	1.2	4.1	27.9	1.3	4.7	22.6	1.4	5.3	18.7	1.6	5.8
120	148.0	0.8	1.5	99.7	0.9	2.0	75.9	1.0	2.5	57.9	1.0	3.0	45.1	1.1	3.5	35.9	1.2	4.1	29.1	1.3	4.7	23.9	1.4	5.2	19.5	1.6	5.8
125	154.1	0.8	1.5	103.9	0.9	2.0	79.1	1.0	2.5	60.3	1.0	3.0	47.0	1.1	3.5	37.4	1.2	4.1	30.3	1.3	4.7	24.8	1.4	5.2	20.4	1.6	5.8
130	160.3	0.8	1.5	108.0	0.9	2.0	82.3	1.0	2.5	62.7	1.0	3.0	48.8	1.1	3.5	38.9	1.2	4.1	31.5	1.3	4.7	25.8	1.4	5.3	21.2	1.6	5.8
135	166.5	0.8	1.5	112.2	0.9	2.0	85.4	1.0	2.5	65.1	1.0	3.0	50.7	1.1	3.5	40.3	1.2	4.1	32.7	1.3	4.7	26.8	1.4	5.3	22.1	1.6	5.8
140	172.6	0.8	1.5	116.3	0.9	2.0	88.6	1.0	2.5	67.5	1.0	3.0	52.6	1.1	3.5	41.8	1.2	4.1	33.9	1.3	4.7	27.8	1.4	5.3	22.9	1.6	5.8
145	178.8	0.8	1.5	120.5	0.9	2.0	91.8	1.0	2.5	69.9	1.0	3.0	54.5	1.1	3.5	43.3	1.2	4.1	35.1	1.3	4.7	28.8	1.4	5.3	23.7	1.6	5.8
150	185.0	0.8	1.5	124.6	0.9	2.0	94.9	1.0	2.5	72.3	1.0	3.0	56.4	1.1	3.5	44.8	1.2	4.1	36.3	1.3	4.7	29.8	1.4	5.3	24.6	1.6	5.8

RETARDANCE "D" AND "C"

NOTE: Width and Depth dimensions are in feet; Velocity measurements are in feet per second;
Depth "D" does not include allowance for freeboard or settlement.

Table DV-13 Parabolic Diversion Design Chart (Retardance "D" and "C", Grade 4.00%)

V1 FOR RETARDANCE "D", TOP WIDTH (T), DEPTH (D), AND V2 FOR RETARDANCE "C"

Grade 4.00 Percent

Q CFS	V1=2.0			V1=2.5			V1=3.0			V1=3.5			V1=4.0			V1=4.5			V1=5.0			V1=5.5			V1=6.0		
	T	D	V2	T	D	V2	T	D	V2	T	D	V2	T	D	V2	T	D	V2	T	D	V2	T	D	V2	T	D	V2
5	8.5	0.6	1.4	5.9	0.7	1.8	4.1	0.8	2.3																		
10	17.2	0.6	1.4	12.1	0.7	1.8	8.8	0.7	2.3	6.7	0.8	2.8	5.2	0.9	3.3	3.8	1.0	3.9									
15	25.8	0.6	1.4	18.1	0.7	1.8	13.4	0.7	2.3	10.3	0.8	2.8	8.1	0.8	3.4	6.4	0.9	3.9	4.9	1.0	4.5						
20	34.4	0.6	1.4	24.2	0.7	1.8	17.8	0.7	2.3	13.9	0.8	2.8	10.9	0.8	3.4	8.7	0.9	3.9	6.9	1.0	4.5	5.5	1.1	5.0			
25	43.0	0.6	1.4	30.2	0.7	1.9	22.3	0.7	2.3	17.4	0.8	2.8	13.8	0.8	3.3	10.9	0.9	3.9	8.8	1.0	4.5	7.1	1.0	5.1	5.7	1.2	5.6
30	51.6	0.6	1.4	36.3	0.7	1.9	26.7	0.7	2.3	20.8	0.8	2.8	16.5	0.8	3.3	13.2	0.9	3.9	10.7	0.9	4.5	8.7	1.0	5.1	7.1	1.1	5.6
35	60.2	0.6	1.4	42.3	0.7	1.9	31.1	0.7	2.3	24.3	0.8	2.8	19.3	0.8	3.4	15.6	0.9	3.9	12.5	0.9	4.5	10.3	1.0	5.0	8.4	1.1	5.6
40	68.8	0.6	1.4	48.3	0.7	1.9	35.6	0.7	2.3	27.8	0.8	2.8	22.0	0.8	3.4	17.8	0.9	3.9	14.4	0.9	4.5	11.8	1.0	5.0	9.8	1.1	5.7
45	77.4	0.6	1.4	54.4	0.7	1.9	40.0	0.7	2.4	31.2	0.8	2.8	24.8	0.8	3.4	20.0	0.9	3.9	16.4	0.9	4.4	13.3	1.0	5.0	11.1	1.1	5.7
50	86.0	0.6	1.4	60.4	0.7	1.9	44.5	0.7	2.4	34.7	0.8	2.8	27.5	0.8	3.4	22.2	0.9	3.9	18.2	0.9	4.4	14.9	1.0	5.0	12.3	1.1	5.7
55	94.6	0.6	1.4	66.5	0.7	1.9	48.9	0.7	2.4	38.2	0.8	2.8	30.3	0.8	3.4	24.4	0.9	3.9	20.0	0.9	4.4	16.6	1.0	5.0	13.6	1.1	5.7
60	103.2	0.6	1.4	72.5	0.7	1.9	53.4	0.7	2.4	41.7	0.8	2.8	33.0	0.8	3.4	26.6	0.9	3.9	21.8	0.9	4.5	18.1	1.0	5.0	14.9	1.1	5.7
65	111.8	0.6	1.4	78.5	0.7	1.9	57.8	0.7	2.4	45.1	0.8	2.8	35.8	0.8	3.4	28.9	0.9	3.9	23.6	0.9	4.5	19.6	1.0	5.0	16.2	1.1	5.7
70	120.4	0.6	1.4	84.6	0.7	1.9	62.3	0.7	2.4	48.6	0.8	2.8	38.6	0.8	3.4	31.1	0.9	3.9	25.4	0.9	4.5	21.1	1.0	5.0	17.7	1.1	5.6
75	129.0	0.6	1.4	90.6	0.7	1.9	66.7	0.7	2.4	52.1	0.8	2.8	41.3	0.8	3.4	33.3	0.9	3.9	27.2	0.9	4.5	22.6	1.0	5.0	19.0	1.1	5.6
80	137.6	0.6	1.4	96.7	0.7	1.9	71.2	0.7	2.4	55.5	0.8	2.8	44.1	0.8	3.4	35.5	0.9	3.9	29.1	0.9	4.5	24.1	1.0	5.0	20.2	1.1	5.6
85	146.2	0.6	1.4	102.7	0.7	1.9	75.6	0.7	2.4	59.0	0.8	2.8	46.8	0.8	3.4	37.7	0.9	3.9	30.9	0.9	4.5	25.6	1.0	5.0	21.5	1.1	5.6
90	154.8	0.6	1.4	108.7	0.7	1.9	80.0	0.7	2.4	62.5	0.8	2.8	49.6	0.8	3.4	39.9	0.9	3.9	32.7	0.9	4.5	27.1	1.0	5.0	22.8	1.1	5.6
95	163.4	0.6	1.4	114.8	0.7	1.9	84.5	0.7	2.4	65.9	0.8	2.8	52.3	0.8	3.4	42.2	0.9	3.9	34.5	0.9	4.5	28.6	1.0	5.0	24.0	1.1	5.6
100	172.0	0.6	1.4	120.8	0.7	1.9	88.9	0.7	2.4	69.4	0.8	2.8	55.1	0.8	3.4	44.4	0.9	3.9	36.3	0.9	4.5	30.1	1.0	5.0	25.3	1.1	5.6
105	180.6	0.6	1.4	126.9	0.7	1.9	93.4	0.7	2.4	72.9	0.8	2.8	57.8	0.8	3.4	46.6	0.9	3.9	38.1	0.9	4.5	31.6	1.0	5.0	26.5	1.1	5.6
110	189.2	0.6	1.4	132.9	0.7	1.9	97.8	0.7	2.4	76.3	0.8	2.8	60.6	0.8	3.4	48.8	0.9	3.9	39.9	0.9	4.5	33.1	1.0	5.0	27.8	1.1	5.6
115	197.8	0.6	1.4	138.9	0.7	1.9	102.3	0.7	2.4	79.8	0.8	2.8	63.3	0.8	3.4	51.0	0.9	3.9	41.7	0.9	4.5	34.6	1.0	5.0	29.0	1.1	5.6
120	206.4	0.6	1.4	145.0	0.7	1.9	106.7	0.7	2.4	83.3	0.8	2.8	66.1	0.8	3.4	53.3	0.9	3.9	43.6	0.9	4.5	36.1	1.0	5.0	30.2	1.1	5.7
125	215.0	0.6	1.4	151.0	0.7	1.9	111.2	0.7	2.4	86.8	0.8	2.8	68.8	0.8	3.4	55.5	0.9	3.9	45.4	0.9	4.5	37.6	1.0	5.0	31.5	1.1	5.7
130	223.7	0.6	1.4	157.1	0.7	1.9	115.6	0.7	2.4	90.2	0.8	2.8	71.6	0.8	3.4	57.7	0.9	3.9	47.2	0.9	4.5	39.1	1.0	5.0	32.7	1.1	5.7
135	232.3	0.6	1.4	163.1	0.7	1.9	120.1	0.7	2.4	93.7	0.8	2.8	74.3	0.8	3.4	59.9	0.9	3.9	49.0	0.9	4.5	40.6	1.0	5.0	34.0	1.1	5.7
140	240.9	0.6	1.4	169.1	0.7	1.9	124.5	0.7	2.4	97.2	0.8	2.8	77.1	0.8	3.4	62.1	0.9	3.9	50.8	0.9	4.5	42.1	1.0	5.0	35.2	1.1	5.7
145	249.5	0.6	1.4	175.2	0.7	1.9	129.0	0.7	2.4	100.6	0.8	2.8	79.8	0.8	3.4	64.3	0.9	3.9	52.6	0.9	4.5	43.6	1.0	5.0	36.5	1.1	5.7
150	258.1	0.6	1.4	181.2	0.7	1.9	133.4	0.7	2.4	104.1	0.8	2.8	82.6	0.8	3.4	66.6	0.9	3.9	54.4	0.9	4.5	45.1	1.0	5.0	37.8	1.1	5.7

RETARDANCE "D" AND "C"

NOTE: Width and Depth dimensions are in feet; Velocity measurements are in feet per second; Depth "D" does not include allowance for freeboard or settlement.

Table DV-14 Parabolic Diversion Design Chart (Retardance "D" and "C", Grade 6.00%)

V1 FOR RETARDANCE "D", TOP WIDTH (T), DEPTH (D), AND V2 FOR RETARDANCE "C"

Grade 6.00 Percent

Q CFS	V1=2.0			V1=2.5			V1=3.0			V1=3.5			V1=4.0			V1=4.5			V1=5.0			V1=5.5			V1=6.0		
	T	D	V2	T	D	V2	T	D	V2	T	D	V2	T	D	V2	T	D	V2	T	D	V2	T	D	V2	T	D	V2
5	10.6	0.5	1.3	7.3	0.6	1.8	5.3	0.6	2.3	4.0	0.7	2.8	2.9	0.8	3.2												
10	21.1	0.5	1.3	14.7	0.6	1.8	10.9	0.6	2.3	8.4	0.7	2.8	6.6	0.7	3.2	5.3	0.8	3.8	4.2	0.8	4.3						
15	31.6	0.5	1.3	22.1	0.6	1.8	16.3	0.6	2.3	12.7	0.6	2.7	10.1	0.7	3.3	8.2	0.7	3.8	6.6	0.8	4.3	5.4	0.9	4.9	4.3	1.0	5.5
20	42.1	0.5	1.3	29.5	0.6	1.8	21.7	0.6	2.3	17.0	0.6	2.7	13.6	0.7	3.2	11.1	0.7	3.7	9.0	0.8	4.3	7.4	0.8	4.9	6.1	0.9	5.5
25	52.7	0.5	1.3	36.8	0.6	1.8	27.1	0.6	2.3	21.2	0.6	2.8	17.0	0.7	3.2	13.9	0.7	3.8	11.3	0.8	4.3	9.3	0.8	4.9	7.8	0.9	5.5
30	63.2	0.5	1.3	44.2	0.6	1.8	32.5	0.6	2.3	25.4	0.6	2.8	20.4	0.7	3.2	16.6	0.7	3.8	13.7	0.8	4.3	11.3	0.8	4.9	9.4	0.9	5.5
35	73.7	0.5	1.3	51.6	0.6	1.8	38.0	0.6	2.3	29.7	0.6	2.8	23.8	0.7	3.2	19.4	0.7	3.8	16.0	0.8	4.3	13.4	0.8	4.9	11.1	0.9	5.5
40	84.2	0.5	1.3	58.9	0.6	1.8	43.4	0.6	2.3	33.9	0.6	2.8	27.2	0.7	3.3	22.2	0.7	3.8	18.3	0.8	4.3	15.3	0.8	4.9	12.7	0.9	5.5
45	94.8	0.5	1.3	66.3	0.6	1.8	48.8	0.6	2.3	38.2	0.6	2.8	30.7	0.7	3.3	24.9	0.7	3.8	20.6	0.8	4.3	17.2	0.8	4.9	14.5	0.9	5.4
50	105.3	0.5	1.3	73.6	0.6	1.8	54.2	0.6	2.3	42.4	0.6	2.8	34.1	0.7	3.3	27.7	0.7	3.8	22.8	0.8	4.3	19.1	0.8	4.9	16.1	0.9	5.4
55	115.8	0.5	1.3	81.0	0.6	1.8	59.7	0.6	2.3	46.6	0.6	2.8	37.5	0.7	3.3	30.5	0.7	3.8	25.1	0.8	4.3	21.0	0.8	4.9	17.7	0.9	5.4
60	126.4	0.5	1.3	88.4	0.6	1.8	65.1	0.6	2.3	50.9	0.6	2.8	40.9	0.7	3.3	33.3	0.7	3.8	27.4	0.8	4.3	22.9	0.8	4.9	19.3	0.9	5.4
65	136.9	0.5	1.3	95.7	0.6	1.8	70.5	0.6	2.3	55.1	0.6	2.8	44.3	0.7	3.3	36.0	0.7	3.8	29.7	0.8	4.3	24.8	0.8	4.9	20.9	0.9	5.4
70	147.4	0.5	1.3	103.1	0.6	1.8	75.9	0.6	2.3	59.3	0.6	2.8	47.7	0.7	3.3	38.8	0.7	3.8	32.0	0.8	4.3	26.7	0.8	4.9	22.5	0.9	5.4
75	158.0	0.5	1.3	110.5	0.6	1.8	81.3	0.6	2.3	63.6	0.6	2.8	51.1	0.7	3.3	41.6	0.7	3.8	34.3	0.8	4.3	28.6	0.8	4.9	24.1	0.9	5.4
80	168.5	0.5	1.3	117.8	0.6	1.8	86.8	0.6	2.3	67.8	0.6	2.8	54.5	0.7	3.3	44.3	0.7	3.8	36.5	0.8	4.3	30.5	0.8	4.9	25.7	0.9	5.5
85	179.0	0.5	1.3	125.2	0.6	1.8	92.2	0.6	2.3	72.0	0.6	2.8	57.9	0.7	3.3	47.1	0.7	3.8	38.8	0.8	4.3	32.4	0.8	4.9	27.3	0.9	5.5
90	189.6	0.5	1.3	132.6	0.6	1.8	97.6	0.6	2.3	76.3	0.6	2.8	61.3	0.7	3.3	49.9	0.7	3.8	41.1	0.8	4.3	34.3	0.8	4.9	28.9	0.9	5.5
95	200.1	0.5	1.3	139.9	0.6	1.8	103.0	0.6	2.3	80.5	0.6	2.8	64.7	0.7	3.3	52.6	0.7	3.8	43.4	0.8	4.3	36.2	0.8	4.9	30.5	0.9	5.5
100	210.6	0.5	1.3	147.3	0.6	1.8	108.5	0.6	2.3	84.8	0.6	2.8	68.1	0.7	3.3	55.4	0.7	3.8	45.7	0.8	4.3	38.1	0.8	4.9	32.1	0.9	5.5
105	221.1	0.5	1.3	154.6	0.6	1.8	113.9	0.6	2.3	89.0	0.6	2.8	71.5	0.7	3.3	58.2	0.7	3.8	47.9	0.8	4.3	40.0	0.8	4.9	33.7	0.9	5.5
110	231.7	0.5	1.3	162.0	0.6	1.8	119.3	0.6	2.3	93.2	0.6	2.8	74.9	0.7	3.3	60.9	0.7	3.8	50.2	0.8	4.3	41.9	0.8	4.9	35.3	0.9	5.5
115	242.2	0.5	1.3	169.4	0.6	1.8	124.7	0.6	2.3	97.5	0.6	2.8	78.3	0.7	3.3	63.7	0.7	3.8	52.5	0.8	4.3	43.8	0.8	4.9	36.9	0.9	5.5
120	252.7	0.5	1.3	176.7	0.6	1.8	130.2	0.6	2.3	101.7	0.6	2.8	81.7	0.7	3.3	66.5	0.7	3.8	54.8	0.8	4.3	45.7	0.8	4.9	38.5	0.9	5.5
125	263.3	0.5	1.3	184.1	0.6	1.8	135.6	0.6	2.3	106.0	0.6	2.8	85.1	0.7	3.3	69.3	0.7	3.8	57.1	0.8	4.3	47.6	0.8	4.9	40.1	0.9	5.5
130	273.8	0.5	1.3	191.5	0.6	1.8	141.0	0.6	2.3	110.2	0.6	2.8	88.5	0.7	3.3	72.0	0.7	3.8	59.4	0.8	4.3	49.5	0.8	4.9	41.7	0.9	5.5
135	284.3	0.5	1.3	198.8	0.6	1.8	146.4	0.6	2.3	114.4	0.6	2.8	91.9	0.7	3.3	74.8	0.7	3.8	61.6	0.8	4.3	51.4	0.8	4.9	43.3	0.9	5.5
140	294.9	0.5	1.3	206.2	0.6	1.8	151.8	0.6	2.3	118.7	0.6	2.8	95.3	0.7	3.3	77.6	0.7	3.8	63.9	0.8	4.3	53.3	0.8	4.9	44.9	0.9	5.5
145	305.4	0.5	1.3	213.6	0.6	1.8	157.3	0.6	2.3	122.9	0.6	2.8	98.7	0.7	3.3	80.3	0.7	3.8	66.2	0.8	4.3	55.2	0.8	4.9	46.5	0.9	5.5
150	315.9	0.5	1.3	220.9	0.6	1.8	162.7	0.6	2.3	127.1	0.6	2.8	102.1	0.7	3.3	83.1	0.7	3.8	68.5	0.8	4.3	57.1	0.8	4.9	48.1	0.9	5.5

RETARDANCE "D" AND "C"

NOTE: Width and Depth dimensions are in feet; Velocity measurements are in feet per second:
Depth "D" does not include allowance for freeboard or settlement.

Table DV-15 Parabolic Diversion Design Chart (Retardance "D" and "C", Grade 8.00%)

V1 FOR RETARDANCE "D", TOP WIDTH (T), DEPTH' (D), AND V2 FOR RETARDANCE "C"

Grade 8.00 Percent

Q̄ CFS	V1=2.0			V1=2.5			V1=3.0			V1=3.5			V1=4.0			V1=4.5			V1=5.0			V1=5.5			V1=6.0		
	T̄	D̄	V̄2	T̄	D̄	V̄2	T̄	D̄	V̄2	T̄	D̄	V̄2	T̄	D̄	V̄2	T̄	D̄	V̄2	T̄	D̄	V̄2	T̄	D̄	V̄2	T̄	D̄	V̄2
5	12.0	0.5	1.3	8.5	0.5	1.7	6.2	0.5	2.2	4.6	0.6	2.7	3.7	0.6	3.2	2.9	0.7	3.6									
10	24.1	0.5	1.3	16.9	0.5	1.7	12.6	0.5	2.2	9.6	0.6	2.7	7.8	0.6	3.2	6.3	0.6	3.7	5.1	0.7	4.2	4.2	0.8	4.8	3.2	0.9	5.3
15	36.1	0.5	1.3	25.3	0.5	1.7	18.9	0.5	2.2	14.4	0.6	2.7	11.8	0.6	3.2	9.7	0.6	3.7	7.9	0.7	4.2	6.5	0.7	4.8	5.4	0.8	5.3
20	48.1	0.5	1.3	33.8	0.5	1.7	25.2	0.5	2.2	19.2	0.6	2.7	15.8	0.6	3.2	12.9	0.6	3.7	10.7	0.7	4.2	8.8	0.7	4.8	7.4	0.8	5.3
25	60.1	0.5	1.3	42.2	0.5	1.7	31.5	0.5	2.2	24.0	0.6	2.7	19.7	0.6	3.2	16.2	0.6	3.7	13.4	0.7	4.2	11.2	0.7	4.7	9.3	0.8	5.3
30	72.1	0.5	1.3	50.6	0.5	1.7	37.8	0.5	2.2	28.8	0.6	2.7	23.6	0.6	3.2	19.4	0.6	3.7	16.1	0.7	4.2	13.5	0.7	4.8	11.3	0.7	5.3
35	84.1	0.5	1.3	59.1	0.5	1.7	44.1	0.5	2.2	33.6	0.6	2.7	27.6	0.6	3.2	22.6	0.6	3.7	18.7	0.7	4.2	15.7	0.7	4.8	13.3	0.7	5.3
40	96.2	0.5	1.3	67.5	0.5	1.7	50.4	0.5	2.2	38.4	0.6	2.7	31.5	0.6	3.2	25.8	0.6	3.7	21.4	0.7	4.2	17.9	0.7	4.8	15.2	0.7	5.3
45	108.2	0.5	1.3	76.0	0.5	1.7	56.7	0.5	2.2	43.2	0.6	2.7	35.4	0.6	3.2	29.0	0.6	3.7	24.1	0.7	4.2	20.2	0.7	4.8	17.1	0.7	5.3
50	120.2	0.5	1.3	84.4	0.5	1.7	63.0	0.5	2.2	48.0	0.6	2.7	39.4	0.6	3.2	32.3	0.6	3.7	26.8	0.7	4.2	22.4	0.7	4.8	19.0	0.7	5.3
55	132.2	0.5	1.3	92.8	0.5	1.7	69.3	0.5	2.2	52.8	0.6	2.7	43.3	0.6	3.2	35.5	0.6	3.7	29.4	0.7	4.2	24.7	0.7	4.8	20.9	0.7	5.3
60	144.2	0.5	1.3	101.3	0.5	1.7	75.6	0.5	2.2	57.6	0.6	2.7	47.2	0.6	3.2	38.7	0.6	3.7	32.1	0.7	4.2	26.9	0.7	4.8	22.8	0.7	5.3
65	156.3	0.5	1.3	109.7	0.5	1.7	81.8	0.5	2.2	62.4	0.6	2.7	51.2	0.6	3.2	41.9	0.6	3.7	34.8	0.7	4.2	29.1	0.7	4.8	24.7	0.7	5.3
70	168.3	0.5	1.3	118.2	0.5	1.7	88.1	0.5	2.2	67.2	0.6	2.7	55.1	0.6	3.2	45.2	0.6	3.7	37.5	0.7	4.2	31.4	0.7	4.8	26.6	0.7	5.3
75	180.3	0.5	1.3	126.6	0.5	1.7	94.4	0.5	2.2	72.0	0.6	2.7	59.0	0.6	3.2	48.4	0.6	3.7	40.1	0.7	4.2	33.6	0.7	4.8	28.5	0.7	5.3
80	192.3	0.5	1.3	135.0	0.5	1.7	100.7	0.5	2.2	76.8	0.6	2.7	63.0	0.6	3.2	51.6	0.6	3.7	42.8	0.7	4.2	35.9	0.7	4.8	30.3	0.7	5.3
85	204.3	0.5	1.3	143.5	0.5	1.7	107.0	0.5	2.2	81.6	0.6	2.7	66.9	0.6	3.2	54.9	0.6	3.7	45.5	0.7	4.2	38.1	0.7	4.8	32.2	0.7	5.3
90	216.4	0.5	1.3	151.9	0.5	1.7	113.3	0.5	2.2	86.4	0.6	2.7	70.8	0.6	3.2	58.1	0.6	3.7	48.1	0.7	4.2	40.3	0.7	4.8	34.1	0.7	5.3
95	228.4	0.5	1.3	160.3	0.5	1.7	119.6	0.5	2.2	91.2	0.6	2.7	74.8	0.6	3.2	61.3	0.6	3.7	50.8	0.7	4.2	42.6	0.7	4.8	36.0	0.7	5.3
100	240.4	0.5	1.3	168.8	0.5	1.7	125.9	0.5	2.2	96.0	0.6	2.7	78.7	0.6	3.2	64.5	0.6	3.7	53.5	0.7	4.2	44.8	0.7	4.8	37.9	0.7	5.3
105	252.4	0.5	1.3	177.2	0.5	1.7	132.2	0.5	2.2	100.8	0.6	2.7	82.6	0.6	3.2	67.8	0.6	3.7	56.2	0.7	4.2	47.1	0.7	4.8	39.8	0.7	5.3
110	264.4	0.5	1.3	185.7	0.5	1.7	138.5	0.5	2.2	105.6	0.6	2.7	86.6	0.6	3.2	71.0	0.6	3.7	58.8	0.7	4.2	49.3	0.7	4.8	41.7	0.7	5.3
115	276.5	0.5	1.3	194.1	0.5	1.7	144.8	0.5	2.2	110.4	0.6	2.7	90.5	0.6	3.2	74.2	0.6	3.7	61.5	0.7	4.2	51.5	0.7	4.8	43.6	0.7	5.3
120	288.5	0.5	1.3	202.5	0.5	1.7	151.1	0.5	2.2	115.2	0.6	2.7	94.4	0.6	3.2	77.4	0.6	3.7	64.2	0.7	4.2	53.8	0.7	4.8	45.5	0.7	5.3
125	300.5	0.5	1.3	211.0	0.5	1.7	157.4	0.5	2.2	120.0	0.6	2.7	98.4	0.6	3.2	80.7	0.6	3.7	66.9	0.7	4.2	56.0	0.7	4.8	47.4	0.7	5.3
130	312.5	0.5	1.3	219.4	0.5	1.7	163.7	0.5	2.2	124.8	0.6	2.7	102.3	0.6	3.2	83.9	0.6	3.7	69.5	0.7	4.2	58.3	0.7	4.8	49.3	0.7	5.3
135	324.5	0.5	1.3	227.9	0.5	1.7	170.0	0.5	2.2	129.6	0.6	2.7	106.2	0.6	3.2	87.1	0.6	3.7	72.2	0.7	4.2	60.5	0.7	4.8	51.2	0.7	5.3
140	336.6	0.5	1.3	236.3	0.5	1.7	176.3	0.5	2.2	134.4	0.6	2.7	110.2	0.6	3.2	90.3	0.6	3.7	74.9	0.7	4.2	62.7	0.7	4.8	53.1	0.7	5.3
145	348.6	0.5	1.3	244.7	0.5	1.7	182.6	0.5	2.2	139.2	0.6	2.7	114.1	0.6	3.2	93.6	0.6	3.7	77.6	0.7	4.2	65.0	0.7	4.8	55.0	0.7	5.3
150	360.6	0.5	1.3	253.2	0.5	1.7	188.9	0.5	2.2	144.0	0.6	2.7	118.0	0.6	3.2	96.8	0.6	3.7	80.2	0.7	4.2	67.2	0.7	4.8	56.9	0.7	5.3

RETARDANCE "D" AND "C"

NOTE: Width and Depth dimensions are in feet; Velocity measurements are in feet per second
Depth "D" does not include allowance for freeboard or settlement

Table DV-16 Parabolic Diversion Design Chart (Retardance "D" and "C", Grade 10.00%)

V1 FOR RETARDANCE "D", TOP WIDTH (T), DEPTH (D), AND V2 FOR RETARDANCE "C"

Grade 10.00 Percent

Q CFS	V1=2.0			V1=2.5			V1=3.0			V1=3.5			V1=4.0			V1=4.5			V1=5.0			V1=5.5			V1=6.0		
	T	D	V2	T	D	V2	T	D	V2	T	D	V2	T	D	V2	T	D	V2	T	D	V2	T	D	V2	T	D	V2
5	13.3	0.4	1.3	9.4	0.5	1.7	6.8	0.5	2.2	5.3	0.5	2.6	4.1	0.6	3.2	3.4	0.6	3.6	2.6	0.7	4.1						
10	26.6	0.4	1.3	18.7	0.5	1.7	13.8	0.5	2.2	10.9	0.5	2.6	8.5	0.6	3.2	7.1	0.6	3.6	5.9	0.6	4.1	4.9	0.7	4.7	4.0	0.7	5.3
15	39.9	0.4	1.3	28.0	0.5	1.7	20.7	0.5	2.2	16.3	0.5	2.6	12.8	0.6	3.2	10.9	0.6	3.6	9.0	0.6	4.1	7.5	0.6	4.7	6.3	0.7	5.2
20	53.2	0.4	1.3	37.4	0.5	1.7	27.6	0.5	2.2	21.7	0.5	2.7	17.0	0.6	3.2	14.5	0.6	3.6	12.1	0.6	4.1	10.2	0.6	4.6	8.5	0.7	5.2
25	66.5	0.4	1.3	46.7	0.5	1.7	34.5	0.5	2.2	27.1	0.5	2.7	21.3	0.6	3.2	18.1	0.6	3.6	15.1	0.6	4.1	12.7	0.6	4.7	10.8	0.7	5.2
30	79.8	0.4	1.3	56.1	0.5	1.7	41.4	0.5	2.2	32.5	0.5	2.7	25.5	0.6	3.2	21.7	0.6	3.6	18.1	0.6	4.1	15.2	0.6	4.7	12.9	0.7	5.2
35	93.1	0.4	1.3	65.4	0.5	1.7	48.3	0.5	2.2	37.9	0.5	2.7	29.8	0.6	3.2	25.3	0.6	3.6	21.1	0.6	4.1	17.8	0.6	4.7	15.1	0.7	5.2
40	106.4	0.4	1.3	74.7	0.5	1.7	55.2	0.5	2.2	43.3	0.5	2.7	34.0	0.6	3.2	29.0	0.6	3.6	24.1	0.6	4.1	20.3	0.6	4.7	17.2	0.7	5.2
45	119.7	0.4	1.3	84.1	0.5	1.7	62.1	0.5	2.2	48.8	0.5	2.7	38.3	0.6	3.2	32.6	0.6	3.6	27.2	0.6	4.1	22.8	0.6	4.7	19.4	0.7	5.2
50	133.0	0.4	1.3	93.4	0.5	1.7	69.0	0.5	2.2	54.2	0.5	2.7	42.5	0.6	3.2	36.2	0.6	3.6	30.2	0.6	4.1	25.4	0.6	4.7	21.5	0.7	5.2
55	146.3	0.4	1.3	102.8	0.5	1.7	75.9	0.5	2.2	59.6	0.5	2.7	46.8	0.6	3.2	39.8	0.6	3.6	33.2	0.6	4.1	27.9	0.6	4.7	23.7	0.7	5.2
60	159.6	0.4	1.3	112.1	0.5	1.7	82.8	0.5	2.2	65.0	0.5	2.7	51.0	0.6	3.2	43.4	0.6	3.6	36.2	0.6	4.1	30.5	0.6	4.7	25.9	0.7	5.2
65	172.9	0.4	1.3	121.4	0.5	1.7	89.7	0.5	2.2	70.4	0.5	2.7	55.3	0.6	3.2	47.1	0.6	3.6	39.2	0.6	4.1	33.0	0.6	4.7	28.0	0.7	5.2
70	186.2	0.4	1.3	130.8	0.5	1.7	96.6	0.5	2.2	75.8	0.5	2.7	59.5	0.6	3.2	50.7	0.6	3.6	42.2	0.6	4.1	35.5	0.6	4.7	30.2	0.7	5.2
75	199.5	0.4	1.3	140.1	0.5	1.7	103.5	0.5	2.2	81.2	0.5	2.7	63.8	0.6	3.2	54.3	0.6	3.6	45.2	0.6	4.1	38.1	0.6	4.7	32.3	0.7	5.2
80	212.8	0.4	1.3	149.5	0.5	1.7	110.5	0.5	2.2	86.7	0.5	2.7	68.0	0.6	3.2	57.9	0.6	3.6	48.3	0.6	4.1	40.6	0.6	4.7	34.5	0.7	5.2
85	226.1	0.4	1.3	158.8	0.5	1.7	117.4	0.5	2.2	92.1	0.5	2.7	72.3	0.6	3.2	61.5	0.6	3.6	51.3	0.6	4.1	43.1	0.6	4.7	36.6	0.7	5.2
90	239.4	0.4	1.3	168.1	0.5	1.7	124.3	0.5	2.2	97.5	0.5	2.7	76.5	0.6	3.2	65.2	0.6	3.6	54.3	0.6	4.1	45.7	0.6	4.7	38.8	0.7	5.2
95	252.7	0.4	1.3	177.5	0.5	1.7	131.2	0.5	2.2	102.9	0.5	2.7	80.8	0.6	3.2	68.8	0.6	3.6	57.3	0.6	4.1	48.2	0.6	4.7	40.9	0.7	5.2
100	266.0	0.4	1.3	186.8	0.5	1.7	138.1	0.5	2.2	108.3	0.5	2.7	85.0	0.6	3.2	72.4	0.6	3.6	60.3	0.6	4.1	50.7	0.6	4.7	43.1	0.7	5.2
105	279.3	0.4	1.3	196.2	0.5	1.7	145.0	0.5	2.2	113.7	0.5	2.7	89.3	0.6	3.2	76.0	0.6	3.6	63.3	0.6	4.1	53.3	0.6	4.7	45.2	0.7	5.2
110	292.6	0.4	1.3	205.5	0.5	1.7	151.9	0.5	2.2	119.2	0.5	2.7	93.5	0.6	3.2	79.6	0.6	3.6	66.4	0.6	4.1	55.8	0.6	4.7	47.4	0.7	5.2
115	305.9	0.4	1.3	214.9	0.5	1.7	158.8	0.5	2.2	124.6	0.5	2.7	97.8	0.6	3.2	83.3	0.6	3.6	69.4	0.6	4.1	58.3	0.6	4.7	49.5	0.7	5.3
120	319.2	0.4	1.3	224.2	0.5	1.7	165.7	0.5	2.2	130.0	0.5	2.7	102.0	0.6	3.2	86.9	0.6	3.6	72.4	0.6	4.1	60.9	0.6	4.7	51.7	0.7	5.3
125	332.5	0.4	1.3	233.5	0.5	1.7	172.6	0.5	2.2	135.4	0.5	2.7	106.3	0.6	3.2	90.5	0.6	3.6	75.4	0.6	4.1	63.4	0.6	4.7	53.8	0.7	5.3
130	345.8	0.4	1.3	242.9	0.5	1.7	179.5	0.5	2.2	140.8	0.5	2.7	110.5	0.6	3.2	94.1	0.6	3.6	78.4	0.6	4.1	66.0	0.6	4.7	56.0	0.7	5.3
135	359.1	0.4	1.3	252.2	0.5	1.7	186.4	0.5	2.2	146.2	0.5	2.7	114.8	0.6	3.2	97.7	0.6	3.6	81.4	0.6	4.1	68.5	0.6	4.7	58.1	0.7	5.3
140	372.4	0.4	1.3	261.6	0.5	1.7	193.3	0.5	2.2	151.7	0.5	2.7	119.0	0.6	3.2	101.3	0.6	3.6	84.4	0.6	4.1	71.0	0.6	4.7	60.3	0.7	5.3
145	385.7	0.4	1.3	270.9	0.5	1.7	200.2	0.5	2.2	157.1	0.5	2.7	123.3	0.6	3.2	105.0	0.6	3.6	87.5	0.6	4.1	73.6	0.6	4.7	62.5	0.7	5.3
150	399.0	0.4	1.3	280.2	0.5	1.7	207.1	0.5	2.2	162.5	0.5	2.7	127.5	0.6	3.2	108.6	0.6	3.6	90.5	0.6	4.1	76.1	0.6	4.7	64.6	0.7	5.3

RETARDANCE "D" AND "C"

NOTE: Width and Depth dimensions are in feet; Velocity measurements are in feet per second;
Depth "D" does not include allowance for freeboard or settlement.

This Page Intentionally Left Blank

G. Grass Swale (GS)

Grass Swale (GS)

Practice Description

A grass swale is a natural or constructed channel that is shaped or graded to required dimensions and established in suitable vegetation for the stable conveyance of runoff without causing damage to the channel by erosion. This practice applies to sites where concentrated runoff will cause erosion damage, a vegetative lining provides sufficient stability for the channel as designed, and space is available for a relatively large cross section. Typical situations where concentrated flow areas are addressed with a grass swale include roadside ditches, channels at property boundaries, outlets for diversions and other concentrated flow areas subject to channel erosion. Grassed swales are generally considered permanent structures but may be used as a temporary measure.

Planning Considerations

Grass swales should be carefully built to the design cross section, shape and dimensions. Swales are hydraulic structures and as such depend upon the hydraulic parameters to function satisfactorily. Vegetated swales should be well established before large flows are permitted in the channel.

The design of a channel cross section and lining is based primarily upon the volume and velocity of flow expected in the channel. This practice covers grassed swales with low velocity flows (generally less than 5 ft/sec). Where high velocities are anticipated lined swales should be used (see Lined Swale practice or Riprap-lined Swale practice). Lined swales should also be used where there is continuous flow in the swale, which would prevent establishment of vegetation within the flow area.

Besides the primary design considerations of capacity and velocity, a number of other important factors should be taken into account when selecting a cross section (Figure GS-1). These factors include land availability, compatibility with land use and surrounding environment, safety, maintenance requirements outlet conditions, etc.

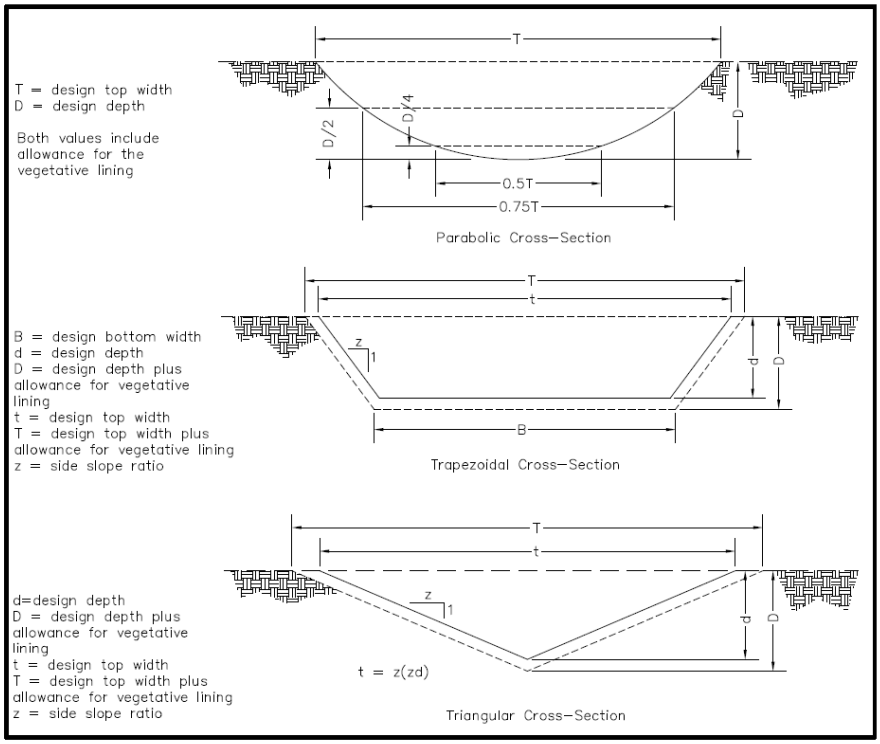

Figure GS-1 Typical Grass Swale Cross section

Triangular Shaped Ditches

Triangular shaped ditches are generally used where the quantity of water to be handled is relatively small, such as along roadsides. A triangular grass swale will suffice where velocities in the ditch are low.

Parabolic Channels

Parabolic channels are often used where the quantity of water to be handled is larger and where space is available for a wide, shallow channel with low velocity flow.

Trapezoidal Channels

Trapezoidal channels are often used where the quantity of water to be carried is large and conditions require that it be carried at a relatively high velocity. Trapezoidal ditches lined with concrete, riprap, or others similar materials are considered lined swales or riprap lined swales. In some cases, erosion control

blankets (see Erosion Control Blanket practice) and high end hydraulic mulch (see Mulching practice) can be used to establish vegetation.

Other Considerations

Outlet conditions for all channels should be considered. Appropriate measures must be taken to dissipate the energy of the flow to prevent scour at the outlet of the swale.

Grass swales should be protected from erosion by concentrated flows. The methods of protecting grass swales would include, but not be limited to the following:

- Vegetation.
- Biodegradable linings and vegetation.

The type and intensity of the protective linings will determine the design of the grass swale.

If velocities exceed stable velocities, for vegetated swales or vegetation with biodegradable linings, then other linings should be used (see Lined Swale or Riprap-lined Swale practice).

The time of the year should be considered when planning grass swales. Grass swales that are seeded to establish vegetation should not be planned for construction during late fall, winter or early spring. Grass swales constructed during mid-summer to early fall may need temporary seeding followed by permanent seeding at the recommended times. The vegetation species should be recommended for the area of the state that it is planned.

Design Criteria

Capacity

Note: This design example uses the Permissible Velocity approach. Grass swale design using the Tractive Stress approach can also be used but is not discussed in this document.

Grass swales shall be designed to convey the peak rate of runoff as shown in Table GS-1. Adjustments should be made for release rates from structures and other drainage facilities. Grass swales shall also be designed to comply with local stormwater ordinances. Grass swales should be designed for greater capacity whenever there is danger of flooding or out of bank flow cannot be tolerated.

Table GS-1 Design Frequency for Grassed Swale

Grass Swale Type	Typical Area of Protection	24 Hour Design Storm Frequency
Temporary Swale	Construction Areas	2-year
	Building Sites	5-year
Permanent Swale	Agricultural Land	10-year
	Reclaimed Mined Land	10-year
	Isolated Buildings	10-year
	Urban areas, Residential, School, Industrial Areas, Recreation Areas, etc.	10-year

Peak rates of runoff values used to determine the capacity requirements should be calculated using accepted engineering methods. Some accepted methods are:

- Natural Resources Conservation Service, National Engineering Handbook Series, Part 650, Engineering Field Handbook, Chapter 2, Estimating Runoff.
- Natural Resources Conservation Service formerly Soil Conservation Service, Technical Release 55, Urban Hydrology for Small Watersheds.
- Other comparable methods.

Grade of Grass Swale

After selecting a location for the grassed swale that will minimize the impacts to the site and maximize the intended use, the grade in the grass swales should be determined. The grade in feet per 100 feet of length can be determined from a topographic map of the site or from a detailed survey of the planned grassed swale location.

Retardance

The grass species used and the degree of maintenance planned for the vegetation determines the retardance of the swale (see Table GS-2).

Generally, the retardance used for the design of grassed swales should be “D” and “C” to produce a stable velocity and adequate capacity to carry the design storm.

Table GS-2 Retardance for Grassed Swales

Retardance	Species [1]	Cover Condition
A	Reed Canarygrass	Excellent stand, tall (average 36”)
	Yellow Bluestem Ischaemum	Excellent stand, tall (average 36”)
B	Smooth Bromegrass	Good stand, mowed (average 12 to 15”)
	Bermudagrass	Good stand, tall (average 12)
	Native Grass mixture (Little Bluestem, Blue Grama, and other long and short Midwest Grasses)	Good stand, unmowed
	Tall Fescue	Good stand, unmowed (average 18”)
	Lespedeza Sericea	Good stand, not woody, tall (average 19”)
	Grass-Legume mixture-Timothy, smooth Bromegrass, or Orchardgrass	Good stand, uncut (average 20”)
	Reed Canarygrass	Good stand, mowed (average 12 to 15”)
	Tall Fescue, with Bird’s Foot Trefoil or Ladino Clover	Good stand, uncut (average 18”)
	Blue Grama	Good stand, uncut (average 13”)
C	Bahiagrass	Good stand, uncut (average 6 to 8”)
	Bermudagrass	Good stand, mowed (average 6”)
	Redtop	Good stand, headed (15 to 20)
	Grass-legume mixture-summer (Orchardgrass, Redtop, Italian Ryegrass, and Common Lespedeza)	Good stand, uncut (6 to 8”)
	Centipedegrass	Very dense cover (average 6”)
	Kentucky Bluegrass	Good stand, headed (6 to 12”)
D	Bermudagrass	Good stand, cut to 2.5” height
	Red Fescue	Good stand, headed (12 to 18”)
	Buffalograss	Good stand, uncut (3 to 6”)
	Grass-Legume mixture-fall, spring (Orchard Grass, Redtop, Italian Ryegrass, and Common Lespedeza)	Good stand, uncut (4 to 5”)
	Lespedeza Sericea	After cutting to 2” height. Very good stand before cutting
E	Bermudagrass	Good stand, cut to 1.5” height.
	Bermudagrass	Burned stubble

1/ Species to establish should be selected based on suitability of soil and expected management.

Velocities

Classify the soil where the swale is to be constructed into erosion resistant cohesive (clayey) fine and coarse grained soils or easily eroded noncohesive silt, clays and sands.

Determine the type of vegetative cover to be established in the swale.

Use the swale grade, cover and soil erodibility to determine permissible velocity using Table GS-3.

Table GS-3 Permissible Velocities in Grassed Swales

Cover	Slope Range[2]	Permissible Velocity[1] Erosion Resistant Soils[3] (clayey)	Easily Eroded Soils[4] (sandy)
	percent	ft/sec	ft/sec
Bermudagrass	< 5	8	6
	5-10	7	4
	over 10	6	3
Bahiagrass	<5	7	5
Tall Fescue	5-10	6	4
	over 10	5	3
Sericea Lespedeza **Weeping Lovegrass**	<5[5]	3.5	2.5

[1]Use velocities exceeding (5ft/sec) only where good covers and proper maintenance can be obtained.
[2]Do not use on slopes steeper than 10 percent except for vegetated side slopes in combination with a stone, concrete, or highly resistant vegetative center section.
[3]Cohesive (clayey) fine-grain soils and coarse-grain soils with cohesive fines with a plasticity index of 10 to 40 (CL, CH, SC, and CG).
[4] Soils that do not meet requirements for erosion-resistant soils.
[5] Do not use on slopes steeper than 5 percent except for vegetated side slopes in combination with a stone, concrete, or highly resistant vegetative center section.

Swale Dimensions

The swale may be triangular shaped, parabolic or trapezoidal as discussed in the planning considerations of this standard and shown in Figure GS-1.

Using the peak discharge, swale grade, permissible velocity and retardance, parabolic dimensions can be determined using Table GS-4, Sheets 1 through 14.

Design dimensions for triangular shaped and trapezoidal shaped swales can be determined using Manning's equation or other accepted engineering designs.

The design water surface elevation of a channel receiving water from other tributary sources shall be equal to or less than the design water surface elevation of the contributing source. The design water surface elevation of contributing and receiving waters should be the same, whenever practical.

A minimum depth may be necessary to provide adequate outlets for subsurface drains and tributary channels.

Drainage

Polyethylene drainage tubing, tile or other suitable subsurface drainage measures shall be provided for sites having high water tables or seepage problems.

Freeboard

The minimum freeboard is 0.25 feet in depth. Freeboard is not required on grass swales with less than 1% slope and where out-of-bank flow will not be damaging and can be tolerated in the normal operation at the site.

Table GS-4 Parabolic Grass Swale Design Sheet 1 of 14

V1 FOR RETARDANCE "D", TOP WIDTH (T), DEPTH (D), AND V2 FOR RETARDANCE "C"

Grade 0.25 Percent

Q CFS	V1=2.0			V1=2.5			V1=3.0			V1=3.5			V1=4.0			V1=4.5			V1=5.0			V1=5.5			V1=6.0		
	T	D	V2	T	D	V2	T	D	V2	T	D	V2	T	D	V2	T	D	V2	T	D	V2	T	D	V2	T	D	V2
5																											
10																											
15																											
20																											
25	9.3	2.3	1.7																								
30	11.7	2.2	1.8																								
35	14.1	2.1	1.7																								
40	16.3	2.1	1.8																								
45	18.5	2.1	1.8	10.4	2.8	2.3																					
50	20.7	2.1	1.8	12.3	2.6	2.3																					
55	22.9	2.1	1.8	13.8	2.6	2.3																					
60	25.0	2.0	1.8	15.3	2.5	2.3																					
65	27.2	2.0	1.8	16.8	2.5	2.3	10.4	3.4	2.8																		
70	29.3	2.0	1.8	18.2	2.5	2.3	12.1	3.1	2.8																		
75	31.9	2.0	1.7	19.7	2.4	2.3	13.5	3.0	2.8																		
80	34.0	2.0	1.7	21.1	2.4	2.3	14.7	2.9	2.8																		
85	36.1	2.0	1.7	22.5	2.4	2.3	15.8	2.9	2.8																		
90	38.2	2.0	1.7	23.9	2.4	2.3	16.9	2.8	2.8																		
95	40.3	2.0	1.7	25.3	2.4	2.3	18.0	2.8	2.8																		
100	42.4	2.0	1.7	26.7	2.4	2.3	19.1	2.8	2.8																		
105	44.6	2.0	1.7	28.1	2.4	2.3	20.2	2.8	2.8																		
110	46.7	2.0	1.7	29.5	2.4	2.3	21.3	2.8	2.8	12.9	3.8	3.4															
115	48.8	2.0	1.7	30.8	2.4	2.3	22.3	2.8	2.8	14.0	3.7	3.4															
120	50.9	2.0	1.7	32.2	2.4	2.3	23.4	2.8	2.8	15.3	3.5	3.4															
125	53.0	2.0	1.8	33.6	2.4	2.3	24.4	2.8	2.8	16.1	3.5	3.4															
130	55.1	2.0	1.8	35.0	2.4	2.3	25.5	2.8	2.8	16.9	3.4	3.4															
135	57.3	2.0	1.8	36.4	2.4	2.3	26.5	2.7	2.8	17.7	3.4	3.4															
140	59.4	2.0	1.8	38.3	2.4	2.3	27.6	2.7	2.8	18.5	3.4	3.4															
145	61.5	2.0	1.8	39.7	2.4	2.3	28.6	2.7	2.8	19.3	3.3	3.4															
150	63.6	2.0	1.8	41.1	2.4	2.3	29.6	2.7	2.8	20.1	3.3	3.4															

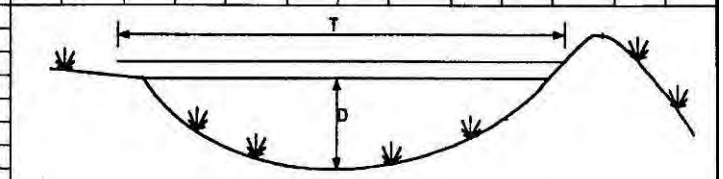

T = Top width, tall vegetation
D = Depth, tall vegetation
V2 = Design velocity, tall vegetation
V1 = Permissible velocity, short vegetation

RETARDANCE "D" AND "C"

NOTE: Width and Depth dimensions are in feet; Velocity measurements are in feet per second; Depth "D" does not include allowance for freeboard or settlement.

Table GS-4 Parabolic Grass Swale Design Sheet 2 of 14

V1 FOR RETARDANCE "D", TOP WIDTH (T), DEPTH (D), AND V2 FOR RETARDANCE "C"

Grade 0.50 Percent

Q CFS	V1=2.0			V1=2.5			V1=3.0			V1=3.5			V1=4.0			V1=4.5			V1=5.0			V1=5.5			V1=6.0		
	T	D	V2	T	D	V2	T	D	V2	T	D	V2	T	D	V2	T	D	V2	T	D	V2	T	D	V2	T	D	V2
5																											
10																											
15	8.4	1.6	1.7																								
20	11.7	1.5	1.7	7.1	2.0	2.2																					
25	14.9	1.5	1.7	9.7	1.8	2.2																					
30	18.0	1.5	1.7	12.0	1.7	2.2																					
35	21.0	1.5	1.7	14.2	1.7	2.2	9.3	2.1	2.7																		
40	24.4	1.5	1.7	16.3	1.7	2.2	10.9	2.0	2.7																		
45	27.4	1.5	1.7	18.5	1.7	2.2	12.5	2.0	2.7																		
50	30.5	1.5	1.7	20.6	1.7	2.2	14.1	1.9	2.7	8.7	2.6	3.3															
55	33.5	1.5	1.7	22.7	1.7	2.2	15.7	1.9	2.7	10.4	2.4	3.3															
60	36.6	1.5	1.7	24.8	1.7	2.2	17.2	1.9	2.7	11.7	2.3	3.3															
65	39.6	1.5	1.7	27.3	1.7	2.2	18.8	1.9	2.7	12.9	2.3	3.3															
70	42.6	1.5	1.7	29.4	1.7	2.2	20.3	1.9	2.7	14.0	2.2	3.3	9.8	2.8	3.8												
75	45.7	1.5	1.7	31.4	1.7	2.2	21.8	1.9	2.7	15.2	2.2	3.3	11.3	2.7	3.8												
80	48.7	1.5	1.7	33.5	1.7	2.2	23.3	1.9	2.7	16.3	2.2	3.3	12.2	2.6	3.8												
85	51.7	1.5	1.7	35.6	1.6	2.2	24.8	1.9	2.7	17.4	2.2	3.3	13.2	2.5	3.8												
90	54.8	1.5	1.7	37.7	1.6	2.2	26.3	1.9	2.7	18.5	2.2	3.3	14.2	2.5	3.8												
95	57.8	1.5	1.7	39.8	1.6	2.2	27.8	1.9	2.7	19.6	2.2	3.3	15.1	2.5	3.8												
100	60.9	1.5	1.7	41.9	1.6	2.2	29.7	1.9	2.7	20.7	2.2	3.3	16.0	2.5	3.8	11.0	3.2	4.3									
105	63.9	1.5	1.7	44.0	1.6	2.2	31.2	1.9	2.7	21.8	2.2	3.3	16.9	2.5	3.8	12.3	3.0	4.3									
110	66.9	1.5	1.7	46.1	1.6	2.2	32.6	1.9	2.7	22.9	2.2	3.3	17.8	2.4	3.8	13.1	2.9	4.3									
115	70.0	1.5	1.7	48.1	1.6	2.2	34.1	1.9	2.7	24.0	2.1	3.3	18.7	2.4	3.8	13.9	2.9	4.3									
120	73.0	1.5	1.7	50.2	1.6	2.2	35.6	1.9	2.7	25.1	2.1	3.3	19.6	2.4	3.8	14.6	2.9	4.3									
125	76.1	1.5	1.7	52.3	1.6	2.2	37.1	1.9	2.7	26.2	2.1	3.3	20.5	2.4	3.8	15.4	2.8	4.3									
130	79.1	1.5	1.7	54.4	1.6	2.2	38.5	1.9	2.7	27.3	2.1	3.3	21.3	2.4	3.8	16.1	2.8	4.3									
135	82.1	1.5	1.7	56.5	1.6	2.2	40.0	1.9	2.7	28.4	2.1	3.3	22.2	2.4	3.8	16.9	2.8	4.3									
140	85.2	1.5	1.7	58.6	1.6	2.2	41.5	1.9	2.7	29.4	2.1	3.3	23.1	2.4	3.8	17.6	2.8	4.3									
145	88.2	1.5	1.7	60.7	1.6	2.2	43.0	1.9	2.7	30.5	2.1	3.3	24.0	2.4	3.8	18.3	2.8	4.3	12.3	3.7	4.9						
150	91.3	1.5	1.7	62.8	1.6	2.2	44.5	1.9	2.7	31.6	2.1	3.3	24.8	2.4	3.8	19.0	2.7	4.3	13.1	3.5	4.9						

RETARDANCE "D" AND "C"

NOTE: Width and Depth dimensions are in feet; Velocity measurements are in feet per second; Depth "D" does not include allowance for freeboard or settlement.

Table GS-4 Parabolic Grass Swale Design Sheet 3 of 14

V1 FOR RETARDANCE "D", TOP WIDTH (T), DEPTH (D), AND V2 FOR RETARDANCE "C"

Grade 0.75 Percent

Q CFS	V1=2.0			V1=2.5			V1=3.0			V1=3.5			V1=4.0			V1=4.5			V1=5.0			V1=5.5			V1=6.0		
	T	D	V2	T	D	V2	T	D	V2	T	D	V2	T	D	V2	T	D	V2	T	D	V2	T	D	V2	T	D	V2
5																											
10	7.0	1.3	1.6																								
15	11.0	1.3	1.6	7.1	1.5	2.1																					
20	14.9	1.3	1.6	9.9	1.4	2.1	6.1	1.9	2.6																		
25	18.9	1.2	1.6	12.7	1.4	2.1	8.6	1.6	2.7																		
30	22.7	1.2	1.6	15.3	1.4	2.1	10.6	1.6	2.6	6.7	2.1	3.2															
35	26.5	1.2	1.6	18.0	1.4	2.1	12.6	1.6	2.7	8.7	1.9	3.2															
40	30.2	1.2	1.6	20.6	1.4	2.1	14.5	1.6	2.7	10.3	1.8	3.2															
45	34.0	1.2	1.6	23.5	1.4	2.1	16.4	1.5	2.7	11.8	1.8	3.2	7.8	2.3	3.8												
50	37.8	1.2	1.6	26.1	1.4	2.1	18.3	1.5	2.7	13.2	1.8	3.2	9.5	2.1	3.8												
55	41.5	1.2	1.6	28.7	1.4	2.1	20.2	1.5	2.7	14.7	1.7	3.2	10.7	2.0	3.8												
60	45.3	1.2	1.6	31.3	1.4	2.1	22.1	1.5	2.7	16.1	1.7	3.2	11.8	2.0	3.8												
65	49.1	1.2	1.6	33.9	1.4	2.1	24.3	1.5	2.6	17.6	1.7	3.2	13.0	2.0	3.8	8.5	2.6	4.4									
70	52.9	1.2	1.6	36.5	1.4	2.1	26.2	1.5	2.6	19.0	1.7	3.2	14.1	2.0	3.8	10.0	2.4	4.3									
75	56.6	1.2	1.6	39.1	1.4	2.1	28.0	1.5	2.6	20.4	1.7	3.2	15.2	2.0	3.8	11.0	2.4	4.4									
80	60.4	1.2	1.6	41.7	1.4	2.1	29.9	1.5	2.6	21.8	1.7	3.2	16.3	1.9	3.8	11.9	2.3	4.4									
85	64.2	1.2	1.6	44.3	1.4	2.1	31.8	1.5	2.6	23.2	1.7	3.2	17.4	1.9	3.8	12.8	2.3	4.4	9.1	2.9	4.8						
90	67.9	1.2	1.6	46.9	1.4	2.1	33.6	1.5	2.6	24.6	1.7	3.2	18.5	1.9	3.8	13.7	2.3	4.4	10.3	2.7	4.8						
95	71.7	1.2	1.6	49.5	1.4	2.1	35.5	1.5	2.6	26.0	1.7	3.2	19.6	1.9	3.8	14.6	2.2	4.4	11.4	2.6	4.8						
100	75.5	1.2	1.6	52.1	1.4	2.1	37.3	1.5	2.6	27.8	1.7	3.2	20.7	1.9	3.8	15.4	2.2	4.4	12.2	2.6	4.8						
105	79.3	1.2	1.6	54.7	1.4	2.1	39.2	1.5	2.6	29.1	1.7	3.2	21.8	1.9	3.8	16.3	2.2	4.4	12.9	2.5	4.8						
110	83.0	1.2	1.6	57.3	1.4	2.1	41.1	1.5	2.6	30.5	1.7	3.2	22.8	1.9	3.8	17.2	2.2	4.4	13.7	2.5	4.8						
115	86.8	1.2	1.6	59.9	1.4	2.1	42.9	1.5	2.6	31.9	1.7	3.2	23.9	1.9	3.8	18.0	2.2	4.4	14.4	2.5	4.8	10.5	3.1	5.3			
120	90.6	1.2	1.6	62.5	1.4	2.1	44.8	1.5	2.7	33.3	1.7	3.2	25.0	1.9	3.8	18.9	2.2	4.4	15.2	2.5	4.8	11.4	3.0	5.3			
125	94.3	1.2	1.6	65.1	1.4	2.1	46.7	1.5	2.7	34.7	1.7	3.2	26.0	1.9	3.8	19.7	2.2	4.4	15.9	2.4	4.8	12.4	2.9	5.3			
130	98.1	1.2	1.6	67.7	1.4	2.1	48.5	1.5	2.7	36.0	1.7	3.2	27.1	1.9	3.8	20.5	2.2	4.4	16.6	2.4	4.8	13.0	2.8	5.3			
135	101.9	1.2	1.6	70.3	1.4	2.1	50.4	1.5	2.7	37.4	1.7	3.2	28.2	1.9	3.8	21.4	2.2	4.4	17.3	2.4	4.8	13.7	2.8	5.3			
140	105.7	1.2	1.6	72.9	1.4	2.1	52.2	1.5	2.7	38.8	1.7	3.2	29.3	1.9	3.8	22.2	2.2	4.4	18.0	2.4	4.9	14.3	2.8	5.3			
145	109.4	1.2	1.6	75.5	1.4	2.1	54.1	1.5	2.7	40.2	1.7	3.2	30.8	1.9	3.7	23.1	2.2	4.4	18.7	2.4	4.9	14.9	2.7	5.3			
150	113.2	1.2	1.6	78.1	1.4	2.1	56.0	1.5	2.7	41.6	1.7	3.2	31.9	1.9	3.7	23.9	2.1	4.4	19.4	2.4	4.9	15.5	2.7	5.3			

RETARDANCE "D" AND "C"

NOTE: Width and Depth dimensions are in feet; Velocity measurements are in feet per second; Depth "D" does not include allowance for freeboard or settlement.

Table GS-4 Parabolic Grass Swale Design Sheet 4 of 14

V1 FOR RETARDANCE "D", TOP WIDTH (T), DEPTH (D), AND V2 FOR RETARDANCE "C"

Grade 1.00 Percent

Q CFS	V1=2.0			V1=2.5			V1=3.0			V1=3.5			V1=4.0			V1=4.5			V1=5.0			V1=5.5			V1=6.0		
	T	D	V2	T	D	V2	T	D	V2	T	D	V2	T	D	V2	T	D	V2	T	D	V2	T	D	V2	T	D	V2
5																											
10	8.2	1.2	1.6	5.2	1.4	2.0																					
15	12.6	1.1	1.6	8.7	1.3	2.1	5.5	1.6	2.6																		
20	17.1	1.1	1.6	11.8	1.2	2.1	8.2	1.4	2.6																		
25	21.4	1.1	1.6	14.9	1.2	2.1	10.5	1.4	2.6	7.3	1.6	3.1															
30	25.7	1.1	1.6	18.0	1.2	2.1	12.8	1.4	2.6	9.1	1.6	3.2															
35	29.9	1.1	1.6	21.2	1.2	2.1	15.0	1.3	2.6	10.9	1.5	3.1	7.8	1.8	3.7												
40	34.2	1.1	1.6	24.3	1.2	2.1	17.3	1.3	2.6	12.6	1.5	3.1	9.2	1.7	3.7												
45	38.5	1.1	1.6	27.3	1.2	2.1	19.5	1.3	2.6	14.3	1.5	3.1	10.6	1.7	3.7	7.2	2.2	4.3									
50	42.7	1.1	1.6	30.3	1.2	2.1	21.9	1.3	2.6	16.0	1.5	3.2	11.9	1.7	3.7	8.8	2.0	4.3									
55	47.0	1.1	1.6	33.3	1.2	2.1	24.1	1.3	2.6	17.7	1.5	3.2	13.3	1.7	3.7	9.9	1.9	4.3									
60	51.3	1.1	1.6	36.3	1.2	2.1	26.3	1.3	2.6	19.3	1.5	3.2	14.6	1.7	3.7	11.0	1.9	4.3									
65	55.5	1.1	1.6	39.4	1.2	2.1	28.5	1.3	2.6	21.0	1.5	3.2	15.9	1.6	3.7	12.1	1.9	4.3	8.0	2.5	4.9						
70	59.8	1.1	1.6	42.4	1.2	2.1	30.7	1.3	2.6	22.7	1.5	3.2	17.1	1.6	3.7	13.2	1.9	4.3	9.5	2.3	4.8						
75	64.1	1.1	1.6	45.4	1.2	2.1	32.9	1.3	2.6	24.6	1.5	3.1	18.5	1.6	3.7	14.2	1.8	4.3	10.4	2.2	4.9						
80	68.3	1.1	1.6	48.4	1.2	2.1	35.0	1.3	2.6	26.2	1.5	3.1	19.8	1.6	3.7	15.2	1.8	4.3	11.3	2.2	4.9						
85	72.6	1.1	1.6	51.5	1.2	2.1	37.2	1.3	2.6	27.9	1.5	3.1	21.0	1.6	3.7	16.3	1.8	4.3	12.1	2.2	4.9	8.8	2.7	5.4			
90	76.9	1.1	1.6	54.5	1.2	2.1	39.4	1.3	2.6	29.5	1.5	3.1	22.3	1.6	3.7	17.3	1.8	4.3	13.0	2.1	4.9	9.8	2.6	5.4			
95	81.1	1.1	1.6	57.5	1.2	2.1	41.6	1.3	2.6	31.1	1.5	3.1	23.6	1.6	3.7	18.3	1.8	4.3	13.8	2.1	4.9	10.9	2.5	5.3			
100	85.4	1.1	1.6	60.5	1.2	2.1	43.8	1.3	2.6	32.7	1.5	3.1	24.9	1.6	3.7	19.3	1.8	4.3	14.6	2.1	4.9	11.6	2.4	5.4			
105	89.7	1.1	1.6	63.6	1.2	2.1	46.0	1.3	2.6	34.4	1.5	3.1	26.5	1.6	3.7	20.3	1.8	4.3	15.4	2.1	4.9	12.4	2.4	5.4	9.7	2.8	5.8
110	94.0	1.1	1.6	66.6	1.2	2.1	48.2	1.3	2.6	36.0	1.5	3.1	27.7	1.6	3.7	21.3	1.8	4.3	16.2	2.1	4.9	13.1	2.4	5.4	10.8	2.6	5.8
115	98.2	1.1	1.6	69.6	1.2	2.1	50.4	1.3	2.6	37.6	1.5	3.1	29.0	1.6	3.7	22.3	1.8	4.3	17.0	2.1	4.9	13.8	2.3	5.4	11.5	2.6	5.8
120	102.5	1.1	1.6	72.6	1.2	2.1	52.5	1.3	2.6	39.3	1.5	3.1	30.2	1.6	3.7	23.3	1.8	4.3	17.9	2.1	4.9	14.5	2.3	5.4	12.2	2.6	5.8
125	106.8	1.1	1.6	75.7	1.2	2.1	54.7	1.3	2.6	40.9	1.5	3.1	31.5	1.6	3.7	24.3	1.8	4.3	18.7	2.1	4.9	15.2	2.3	5.4	12.8	2.5	5.8
130	111.0	1.1	1.6	78.7	1.2	2.1	56.9	1.3	2.6	42.5	1.5	3.1	32.7	1.6	3.7	25.3	1.8	4.3	19.4	2.1	4.9	15.9	2.3	5.4	13.4	2.5	5.8
135	115.3	1.1	1.6	81.7	1.2	2.1	59.1	1.3	2.6	44.2	1.5	3.1	34.0	1.6	3.7	26.3	1.8	4.3	20.2	2.0	4.9	16.6	2.3	5.4	14.1	2.5	5.8
140	119.6	1.1	1.6	84.7	1.2	2.1	61.3	1.3	2.6	45.8	1.5	3.1	35.2	1.6	3.7	27.3	1.8	4.3	21.0	2.0	4.9	17.2	2.3	5.4	14.7	2.5	5.8
145	123.8	1.1	1.6	87.8	1.2	2.1	63.5	1.3	2.6	47.5	1.5	3.1	36.5	1.6	3.7	28.7	1.8	4.3	21.8	2.0	4.9	17.9	2.3	5.4	15.3	2.5	5.8
150	128.1	1.1	1.6	90.8	1.2	2.1	65.7	1.3	2.6	49.1	1.5	3.1	37.8	1.6	3.7	29.7	1.8	4.3	22.6	2.0	4.9	18.6	2.3	5.4	15.9	2.4	5.8

RETARDANCE "D" AND "C"

NOTE: Width and Depth dimensions are in feet; Velocity measurements are in feet per second; Depth "D" does not include allowance for freeboard or settlement.

Table GS-4 Parabolic Grass Swale Design Sheet 5 of 14

V1 FOR RETARDANCE "D", TOP WIDTH (T), DEPTH (D), AND V2 FOR RETARDANCE "C"

Grade 1.25 Percent

Q CFS	V1=2.0			V1=2.5			V1=3.0			V1=3.5			V1=4.0			V1=4.5			V1=5.0			V1=5.5			V1=6.0		
	T	D	V2	T	D	V2	T	D	V2	T	D	V2	T	D	V2	T	D	V2	T	D	V2	T	D	V2	T	D	V2
5	4.1	1.2	1.5																								
10	9.4	1.0	1.5	6.3	1.2	2.0																					
15	14.3	1.0	1.6	9.9	1.1	2.0	6.8	1.3	2.6																		
20	19.4	1.0	1.5	13.4	1.1	2.0	9.5	1.2	2.6	6.7	1.4	3.1															
25	24.2	1.0	1.5	17.0	1.1	2.0	12.1	1.2	2.6	8.8	1.4	3.1	5.9	1.7	3.6												
30	29.0	1.0	1.6	20.4	1.1	2.0	14.6	1.2	2.6	10.7	1.4	3.1	7.8	1.6	3.7												
35	33.8	1.0	1.6	23.8	1.1	2.0	17.1	1.2	2.6	12.7	1.3	3.1	9.4	1.5	3.7	6.5	1.9	4.2									
40	38.6	1.0	1.6	27.1	1.1	2.0	19.8	1.2	2.5	14.6	1.3	3.1	10.9	1.5	3.7	8.1	1.7	4.2									
45	43.5	1.0	1.6	30.5	1.1	2.0	22.3	1.2	2.5	16.5	1.3	3.1	12.5	1.5	3.7	9.4	1.7	4.2									
50	48.3	1.0	1.6	33.9	1.1	2.0	24.8	1.2	2.5	18.3	1.3	3.1	13.9	1.5	3.7	10.6	1.7	4.2	7.7	2.0	4.8						
55	53.1	1.0	1.6	37.3	1.1	2.0	27.2	1.2	2.6	20.5	1.3	3.1	15.4	1.5	3.7	11.8	1.6	4.3	9.0	1.9	4.8						
60	57.9	1.0	1.6	40.7	1.1	2.0	29.7	1.2	2.6	22.3	1.3	3.1	16.9	1.5	3.7	13.0	1.6	4.3	10.1	1.9	4.8						
65	62.8	1.0	1.6	44.1	1.1	2.0	32.2	1.2	2.6	24.2	1.3	3.1	18.3	1.5	3.7	14.2	1.6	4.3	11.1	1.8	4.8	8.0	2.3	5.3			
70	67.6	1.0	1.6	47.5	1.1	2.0	34.6	1.2	2.6	26.0	1.3	3.1	19.8	1.4	3.7	15.4	1.6	4.3	12.0	1.8	4.8	9.3	2.1	5.3			
75	72.4	1.0	1.6	50.8	1.1	2.0	37.1	1.2	2.6	27.9	1.3	3.1	21.2	1.4	3.7	16.5	1.6	4.3	13.0	1.8	4.8	10.1	2.1	5.3			
80	77.2	1.0	1.6	54.2	1.1	2.0	39.6	1.2	2.6	29.7	1.3	3.1	23.0	1.4	3.6	17.7	1.6	4.3	14.0	1.8	4.8	11.0	2.0	5.3			
85	82.1	1.0	1.6	57.6	1.1	2.0	42.0	1.2	2.6	31.6	1.3	3.1	24.4	1.4	3.6	18.8	1.6	4.3	14.9	1.8	4.8	11.8	2.0	5.3			
90	86.9	1.0	1.6	61.0	1.1	2.0	44.5	1.2	2.6	33.5	1.3	3.1	25.8	1.4	3.6	20.0	1.6	4.3	15.9	1.8	4.8	12.6	2.0	5.3	9.1	2.5	5.9
95	91.7	1.0	1.6	64.4	1.1	2.0	47.0	1.2	2.6	35.3	1.3	3.1	27.3	1.4	3.6	21.1	1.6	4.3	16.8	1.8	4.8	13.4	2.0	5.4	10.2	2.4	5.9
100	96.6	1.0	1.6	67.8	1.1	2.0	49.4	1.2	2.6	37.2	1.3	3.1	28.7	1.4	3.6	22.3	1.6	4.3	17.7	1.8	4.8	14.2	2.0	5.4	10.9	2.3	5.9
105	101.4	1.0	1.6	71.2	1.1	2.0	51.9	1.2	2.6	39.0	1.3	3.1	30.1	1.4	3.6	23.4	1.6	4.3	18.7	1.8	4.8	15.0	2.0	5.4	11.6	2.3	5.9
110	106.2	1.0	1.6	74.6	1.1	2.0	54.4	1.2	2.6	40.9	1.3	3.1	31.6	1.4	3.6	24.6	1.6	4.3	19.6	1.7	4.8	15.8	2.0	5.4	12.3	2.3	5.9
115	111.0	1.0	1.6	78.0	1.1	2.0	56.8	1.2	2.6	42.7	1.3	3.1	33.0	1.4	3.6	26.1	1.6	4.2	20.5	1.7	4.8	16.6	1.9	5.4	13.0	2.2	5.9
120	115.9	1.0	1.6	81.3	1.1	2.0	59.3	1.2	2.6	44.6	1.3	3.1	34.4	1.4	3.6	27.2	1.6	4.2	21.5	1.7	4.8	17.3	1.9	5.4	13.6	2.2	5.9
125	120.7	1.0	1.6	84.7	1.1	2.0	61.8	1.2	2.6	46.4	1.3	3.1	35.9	1.4	3.6	28.3	1.6	4.2	22.4	1.7	4.8	18.1	1.9	5.4	14.3	2.2	5.9
130	125.5	1.0	1.6	88.1	1.1	2.0	64.3	1.2	2.6	48.3	1.3	3.1	37.3	1.4	3.7	29.5	1.6	4.2	23.3	1.7	4.8	18.9	1.9	5.4	14.9	2.2	5.9
135	130.3	1.0	1.6	91.5	1.1	2.0	66.7	1.2	2.6	50.2	1.3	3.1	38.7	1.4	3.7	30.6	1.6	4.2	24.2	1.7	4.8	19.6	1.9	5.4	15.6	2.2	5.9
140	135.2	1.0	1.6	94.9	1.1	2.0	69.2	1.2	2.6	52.0	1.3	3.1	40.2	1.4	3.7	31.7	1.6	4.2	25.1	1.7	4.8	20.4	1.9	5.4	16.2	2.2	5.9
145	140.0	1.0	1.6	98.3	1.1	2.0	71.7	1.2	2.6	53.9	1.3	3.1	41.6	1.4	3.7	32.9	1.6	4.2	26.1	1.7	4.8	21.2	1.9	5.4	16.9	2.2	5.9
150	144.8	1.0	1.6	101.7	1.1	2.0	74.1	1.2	2.6	55.7	1.3	3.1	43.0	1.4	3.7	34.0	1.6	4.2	27.0	1.7	4.8	21.9	1.9	5.4	17.5	2.2	5.9

RETARDANCE "D" AND "C"

NOTE: Width and Depth dimensions are in feet; Velocity measurements are in feet per second
Depth "D" does not include allowance for freeboard or settlement.

Table GS-4 Parabolic Grass Swale Design Sheet 6 of 14

V1 FOR RETARDANCE "D", TOP WIDTH (T), DEPTH (D), AND V2 FOR RETARDANCE "C"

Grade 1.50 Percent

Q CFS	V1=2.0			V1=2.5			V1=3.0			V1=3.5			V1=4.0			V1=4.5			V1=5.0			V1=5.5			V1=6.0		
	T	D	V2	T	D	V2	T	D	V2	T	D	V2	T	D	V2	T	D	V2	T	D	V2	T	D	V2	T	D	V2
5	4.9	1.0	1.5																								
10	10.5	0.9	1.5	7.1	1.1	2.0	4.6	1.3	2.5																		
15	16.0	0.9	1.5	10.9	1.0	2.0	7.8	1.1	2.5	5.3	1.4	3.1															
20	21.3	0.9	1.5	14.7	1.0	2.0	10.6	1.1	2.5	7.7	1.3	3.1	5.1	1.6	3.6												
25	26.6	0.9	1.5	18.6	1.0	2.0	13.4	1.1	2.5	9.9	1.2	3.1	7.3	1.4	3.6												
30	31.9	0.9	1.5	22.3	1.0	2.0	16.2	1.1	2.5	12.0	1.2	3.1	9.0	1.4	3.6	6.6	1.6	4.2									
35	37.3	0.9	1.5	26.0	1.0	2.0	19.1	1.1	2.5	14.1	1.2	3.1	10.7	1.4	3.6	8.1	1.5	4.2									
40	42.6	0.9	1.5	29.7	1.0	2.0	21.8	1.1	2.5	16.2	1.2	3.1	12.4	1.3	3.6	9.5	1.5	4.2	6.9	1.8	4.7						
45	47.9	0.9	1.5	33.4	1.0	2.0	24.5	1.1	2.5	18.3	1.2	3.1	14.0	1.3	3.6	10.8	1.5	4.2	8.3	1.7	4.7						
50	53.2	0.9	1.5	37.1	1.0	2.0	27.3	1.1	2.5	20.6	1.2	3.0	15.7	1.3	3.6	12.1	1.5	4.2	9.4	1.7	4.8						
55	58.5	0.9	1.5	40.8	1.0	2.0	30.0	1.1	2.5	22.7	1.2	3.0	17.3	1.3	3.6	13.4	1.5	4.2	10.5	1.6	4.8	8.1	1.9	5.3			
60	63.8	0.9	1.5	44.5	1.0	2.0	32.7	1.1	2.5	24.7	1.2	3.0	18.9	1.3	3.6	14.7	1.4	4.2	11.6	1.6	4.8	9.1	1.9	5.3			
65	69.2	0.9	1.5	48.2	1.0	2.0	35.4	1.1	2.5	26.8	1.2	3.1	20.8	1.3	3.6	16.0	1.4	4.2	12.7	1.6	4.8	10.0	1.8	5.3			
70	74.5	0.9	1.5	51.9	1.0	2.0	38.2	1.1	2.5	28.8	1.2	3.1	22.4	1.3	3.6	17.3	1.4	4.2	13.7	1.6	4.8	10.9	1.8	5.3	8.2	2.2	5.8
75	79.8	0.9	1.5	55.6	1.0	2.0	40.9	1.1	2.5	30.9	1.2	3.1	23.9	1.3	3.6	18.6	1.4	4.2	14.8	1.6	4.8	11.8	1.8	5.3	9.3	2.1	5.8
80	85.1	0.9	1.5	59.4	1.0	2.0	43.6	1.1	2.5	32.9	1.2	3.1	25.5	1.3	3.6	19.9	1.4	4.2	15.8	1.6	4.8	12.7	1.8	5.3	10.1	2.0	5.9
85	90.4	0.9	1.5	63.1	1.0	2.0	46.3	1.1	2.5	35.0	1.2	3.1	27.1	1.3	3.6	21.2	1.4	4.2	16.9	1.6	4.8	13.6	1.8	5.3	10.9	2.0	5.9
90	95.8	0.9	1.5	66.8	1.0	2.0	49.0	1.1	2.5	37.1	1.2	3.1	28.7	1.3	3.6	22.8	1.4	4.1	17.9	1.6	4.8	14.5	1.8	5.3	11.6	2.0	5.9
95	101.1	0.9	1.5	70.5	1.0	2.0	51.8	1.1	2.5	39.1	1.2	3.1	30.3	1.3	3.6	24.0	1.4	4.2	18.9	1.6	4.8	15.3	1.7	5.3	12.4	2.0	5.9
100	106.4	0.9	1.5	74.2	1.0	2.0	54.5	1.1	2.5	41.2	1.2	3.1	31.9	1.3	3.6	25.3	1.4	4.2	20.0	1.6	4.8	16.2	1.7	5.3	13.1	1.9	5.9
105	111.7	0.9	1.5	77.9	1.0	2.0	57.2	1.1	2.5	43.2	1.2	3.1	33.5	1.3	3.6	26.5	1.4	4.2	21.0	1.6	4.8	17.0	1.7	5.3	13.9	1.9	5.9
110	117.0	0.9	1.5	81.6	1.0	2.0	59.9	1.1	2.5	45.3	1.2	3.1	35.1	1.3	3.6	27.8	1.4	4.2	22.0	1.6	4.8	17.9	1.7	5.3	14.6	1.9	5.9
115	122.4	0.9	1.5	85.3	1.0	2.0	62.6	1.1	2.5	47.3	1.2	3.1	36.7	1.3	3.6	29.1	1.4	4.2	23.1	1.6	4.8	18.8	1.7	5.3	15.3	1.9	5.9
120	127.7	0.9	1.5	89.0	1.0	2.0	65.4	1.1	2.5	49.4	1.2	3.1	38.3	1.3	3.6	30.3	1.4	4.2	24.1	1.6	4.8	19.6	1.7	5.3	16.1	1.9	5.9
125	133.0	0.9	1.5	92.7	1.0	2.0	68.1	1.1	2.5	51.4	1.2	3.1	39.9	1.3	3.6	31.6	1.4	4.2	25.4	1.6	4.8	20.5	1.7	5.3	16.8	1.9	5.9
130	138.3	0.9	1.5	96.4	1.0	2.0	70.8	1.1	2.5	53.5	1.2	3.1	41.4	1.3	3.6	32.8	1.4	4.2	26.4	1.6	4.8	21.3	1.7	5.3	17.5	1.9	5.9
135	143.6	0.9	1.5	100.1	1.0	2.0	73.5	1.1	2.5	55.6	1.2	3.1	43.0	1.3	3.6	34.1	1.4	4.2	27.4	1.6	4.8	22.2	1.7	5.3	18.2	1.9	5.9
140	149.0	0.9	1.5	103.9	1.0	2.0	76.3	1.1	2.5	57.6	1.2	3.1	44.6	1.3	3.6	35.3	1.4	4.2	28.5	1.6	4.8	23.0	1.7	5.3	18.9	1.9	5.9
145	154.3	0.9	1.5	107.6	1.0	2.0	79.0	1.1	2.5	59.7	1.2	3.1	46.2	1.3	3.6	36.6	1.4	4.2	29.5	1.6	4.8	23.8	1.7	5.3	19.7	1.9	5.9
150	159.6	0.9	1.5	111.3	1.0	2.0	81.7	1.1	2.5	61.7	1.2	3.1	47.8	1.3	3.6	37.9	1.4	4.2	30.5	1.6	4.8	24.7	1.7	5.3	20.4	1.9	5.9

RETARDANCE "D" AND "C"

NOTE: Width and Depth dimensions are in feet; Velocity measurements are in feet per second; Depth "D" does not include allowance for freeboard or settlement.

GaSWCC /Amd

Table GS-4 Parabolic Grass Swale Design Sheet 7 of 14

V1 FOR RETARDANCE "D", TOP WIDTH (T), DEPTH (D), AND V2 FOR RETARDANCE "C"

Grade 1.75 Percent

Q CFS	V1=2.0			V1=2.5			V1=3.0			V1=3.5			V1=4.0			V1=4.5			V1=5.0			V1=5.5			V1=6.0		
	T	D	V2	T	D	V2	T	D	V2	T	D	V2	T	D	V2	T	D	V2	T	D	V2	T	D	V2	T	D	V2
5	5.4	0.9	1.5																								
10	11.4	0.9	1.5	7.7	1.0	2.0	5.4	1.1	2.5																		
15	17.3	0.9	1.5	11.8	1.0	2.0	8.6	1.1	2.5	6.2	1.2	3.0															
20	23.1	0.9	1.5	16.0	0.9	2.0	11.6	1.0	2.5	8.6	1.2	3.0	6.3	1.3	3.6												
25	28.8	0.9	1.5	20.0	0.9	2.0	14.6	1.0	2.5	10.9	1.1	3.0	8.2	1.3	3.6	5.9	1.5	4.1									
30	34.6	0.9	1.5	24.0	0.9	2.0	17.8	1.0	2.5	13.2	1.1	3.0	10.1	1.2	3.6	7.6	1.4	4.2									
35	40.3	0.9	1.5	28.0	0.9	2.0	20.7	1.0	2.5	15.5	1.1	3.0	11.9	1.2	3.6	9.1	1.4	4.2	6.9	1.6	4.7						
40	46.1	0.9	1.5	32.0	0.9	2.0	23.7	1.0	2.5	18.0	1.1	3.0	13.7	1.2	3.6	10.6	1.4	4.2	8.2	1.6	4.7						
45	51.9	0.9	1.5	36.0	0.9	2.0	26.6	1.0	2.5	20.2	1.1	3.0	15.4	1.2	3.6	12.0	1.3	4.2	9.4	1.5	4.7	7.0	1.8	5.3			
50	57.6	0.9	1.5	40.0	0.9	2.0	29.6	1.0	2.5	22.4	1.1	3.0	17.2	1.2	3.6	13.5	1.3	4.1	10.6	1.5	4.7	8.3	1.7	5.3			
55	63.4	0.9	1.5	44.0	0.9	2.0	32.5	1.0	2.5	24.7	1.1	3.0	19.2	1.2	3.6	14.9	1.3	4.1	11.8	1.5	4.7	9.3	1.7	5.3	6.7	2.1	5.8
60	69.1	0.9	1.5	48.0	0.9	2.0	35.5	1.0	2.5	26.9	1.1	3.0	20.9	1.2	3.6	16.3	1.3	4.1	12.9	1.5	4.7	10.3	1.6	5.3	8.1	1.9	5.8
65	74.9	0.9	1.5	52.0	0.9	2.0	38.4	1.0	2.5	29.2	1.1	3.0	22.7	1.2	3.6	17.7	1.3	4.1	14.1	1.5	4.7	11.3	1.6	5.3	9.0	1.9	5.8
70	80.7	0.9	1.5	56.0	0.9	2.0	41.4	1.0	2.5	31.4	1.1	3.0	24.4	1.2	3.6	19.1	1.3	4.1	15.2	1.5	4.7	12.3	1.6	5.3	9.8	1.8	5.8
75	86.4	0.9	1.5	60.0	0.9	2.0	44.3	1.0	2.5	33.6	1.1	3.0	26.1	1.2	3.6	20.5	1.3	4.1	16.4	1.4	4.7	13.2	1.6	5.3	10.7	1.8	5.8
80	92.2	0.9	1.5	63.9	0.9	2.0	47.3	1.0	2.5	35.9	1.1	3.0	27.9	1.2	3.6	22.2	1.3	4.1	17.5	1.4	4.7	14.2	1.6	5.3	11.5	1.8	5.8
85	97.9	0.9	1.5	67.9	0.9	2.0	50.2	1.0	2.5	38.1	1.1	3.0	29.6	1.2	3.6	23.5	1.3	4.1	18.6	1.4	4.7	15.1	1.6	5.3	12.3	1.8	5.8
90	103.7	0.9	1.5	71.9	0.9	2.0	53.2	1.0	2.5	40.3	1.1	3.0	31.4	1.2	3.6	24.9	1.3	4.1	19.8	1.4	4.7	16.1	1.6	5.3	13.1	1.8	5.8
95	109.5	0.9	1.5	75.9	0.9	2.0	56.1	1.0	2.5	42.6	1.1	3.0	33.1	1.2	3.6	26.3	1.3	4.1	20.9	1.4	4.7	17.0	1.6	5.3	13.9	1.7	5.8
100	115.2	0.9	1.5	79.9	0.9	2.0	59.1	1.0	2.5	44.8	1.1	3.0	34.8	1.2	3.6	27.7	1.3	4.1	22.0	1.4	4.7	17.9	1.6	5.3	14.7	1.7	5.8
105	121.0	0.9	1.5	83.9	0.9	2.0	62.0	1.0	2.5	47.1	1.1	3.0	36.6	1.2	3.6	29.0	1.3	4.1	23.4	1.4	4.7	18.9	1.6	5.3	15.5	1.7	5.8
110	126.8	0.9	1.5	87.9	0.9	2.0	65.0	1.0	2.5	49.3	1.1	3.0	38.3	1.2	3.6	30.4	1.3	4.1	24.5	1.4	4.7	19.8	1.6	5.3	16.3	1.7	5.8
115	132.5	0.9	1.5	91.9	0.9	2.0	67.9	1.0	2.5	51.5	1.1	3.0	40.1	1.2	3.6	31.8	1.3	4.1	25.6	1.4	4.7	20.7	1.6	5.3	17.1	1.7	5.9
120	138.3	0.9	1.5	95.9	0.9	2.0	70.9	1.0	2.5	53.8	1.1	3.0	41.8	1.2	3.6	33.2	1.3	4.1	26.8	1.4	4.7	21.7	1.6	5.3	17.9	1.7	5.9
125	144.0	0.9	1.5	99.9	0.9	2.0	73.8	1.0	2.5	56.0	1.1	3.0	43.5	1.2	3.6	34.6	1.3	4.1	27.9	1.4	4.7	22.6	1.6	5.3	18.7	1.7	5.9
130	149.8	0.9	1.5	103.9	0.9	2.0	76.8	1.0	2.5	58.3	1.1	3.0	45.3	1.2	3.6	35.9	1.3	4.1	29.0	1.4	4.7	23.5	1.6	5.3	19.4	1.7	5.9
135	155.6	0.9	1.5	107.9	0.9	2.0	79.7	1.0	2.5	60.5	1.1	3.0	47.0	1.2	3.6	37.3	1.3	4.1	30.1	1.4	4.7	24.5	1.6	5.3	20.2	1.7	5.9
140	161.3	0.9	1.5	111.9	0.9	2.0	82.7	1.0	2.5	62.7	1.1	3.0	48.8	1.2	3.6	38.7	1.3	4.1	31.2	1.4	4.7	25.7	1.6	5.3	21.0	1.7	5.9
145	167.1	0.9	1.5	115.9	0.9	2.0	85.6	1.0	2.5	65.0	1.1	3.0	50.5	1.2	3.6	40.1	1.3	4.1	32.3	1.4	4.7	26.6	1.6	5.3	21.8	1.7	5.9
150	172.8	0.9	1.5	119.9	0.9	2.0	88.6	1.0	2.5	67.2	1.1	3.0	52.2	1.2	3.6	41.5	1.3	4.1	33.4	1.4	4.7	27.5	1.6	5.3	22.6	1.7	5.9

RETARDANCE "D" AND "C"

NOTE: Width and Depth dimensions are in feet; Velocity measurements are in feet per second.
Depth "D" does not include allowance for freeboard or settlement.

Table GS-4 Parabolic Grass Swale Design Sheet 8 of 14

V1 FOR RETARDANCE "D", TOP WIDTH (T), DEPTH (D), AND V2 FOR RETARDANCE "C"

Grade 2.00 Percent

Q CFS	V1=2.0			V1=2.5			V1=3.0			V1=3.5			V1=4.0			V1=4.5			V1=5.0			V1=5.5			V1=6.0		
	T	D	V2	T	D	V2	T	D	V2	T	D	V2	T	D	V2	T	D	V2	T	D	V2	T	D	V2	T	D	V2
5	5.9	0.9	1.5																								
10	12.4	0.8	1.5	8.1	0.9	2.0	5.9	1.0	2.5																		
15	18.5	0.8	1.5	12.3	0.9	2.0	9.3	1.0	2.5	6.8	1.1	3.0	4.7	1.4	3.5												
20	24.7	0.8	1.5	16.7	0.9	2.0	12.5	1.0	2.5	9.4	1.1	3.0	7.0	1.2	3.6	4.7	1.5	4.1									
25	30.8	0.8	1.5	20.8	0.9	2.0	15.9	1.0	2.4	11.8	1.1	3.0	9.0	1.2	3.5	6.8	1.3	4.1									
30	37.0	0.8	1.5	25.0	0.9	2.0	19.0	1.0	2.5	14.3	1.1	3.0	11.0	1.2	3.5	8.5	1.3	4.1	6.4	1.5	4.7						
35	43.2	0.8	1.5	29.1	0.9	2.0	22.2	1.0	2.5	16.9	1.0	3.0	12.9	1.1	3.5	10.1	1.3	4.1	7.8	1.4	4.7						
40	49.3	0.8	1.5	33.3	0.9	2.0	25.3	1.0	2.5	19.3	1.0	3.0	14.8	1.1	3.5	11.6	1.3	4.1	9.1	1.4	4.7	7.1	1.6	5.2			
45	55.5	0.8	1.5	37.4	0.9	2.0	28.5	1.0	2.5	21.7	1.0	3.0	16.7	1.1	3.5	13.1	1.3	4.1	10.4	1.4	4.7	8.2	1.6	5.2			
50	61.7	0.8	1.5	41.6	0.9	2.0	31.7	1.0	2.5	24.1	1.0	3.0	18.8	1.1	3.5	14.7	1.2	4.1	11.7	1.4	4.7	9.3	1.5	5.3	7.1	1.8	5.8
55	67.8	0.8	1.5	45.7	0.9	2.0	34.8	1.0	2.5	26.5	1.0	3.0	20.7	1.1	3.5	16.2	1.2	4.1	12.9	1.4	4.7	10.4	1.5	5.3	8.2	1.7	5.8
60	74.0	0.8	1.5	49.9	0.9	2.0	38.0	1.0	2.5	28.9	1.0	3.0	22.6	1.1	3.5	17.7	1.2	4.1	14.1	1.4	4.7	11.4	1.5	5.3	9.2	1.7	5.8
65	80.2	0.8	1.5	54.0	0.9	2.0	41.1	1.0	2.5	31.4	1.0	3.0	24.5	1.1	3.5	19.5	1.2	4.1	15.4	1.3	4.7	12.4	1.5	5.3	10.1	1.7	5.8
70	86.3	0.8	1.5	58.2	0.9	2.0	44.3	1.0	2.5	33.8	1.0	3.0	26.3	1.1	3.5	21.0	1.2	4.1	16.6	1.3	4.7	13.5	1.5	5.3	11.0	1.6	5.8
75	92.5	0.8	1.5	62.3	0.9	2.0	47.5	1.0	2.5	36.2	1.0	3.0	28.2	1.1	3.5	22.4	1.2	4.1	17.8	1.3	4.7	14.5	1.5	5.3	11.8	1.6	5.8
80	98.7	0.8	1.5	66.5	0.9	2.0	50.6	1.0	2.5	38.6	1.0	3.0	30.1	1.1	3.5	23.9	1.2	4.1	19.0	1.3	4.7	15.5	1.5	5.3	12.7	1.6	5.8
85	104.8	0.8	1.5	70.6	0.9	2.0	53.8	1.0	2.5	41.0	1.0	3.0	32.0	1.1	3.5	25.4	1.2	4.1	20.3	1.3	4.7	16.5	1.5	5.3	13.6	1.6	5.8
90	111.0	0.8	1.5	74.8	0.9	2.0	57.0	1.0	2.5	43.4	1.0	3.0	33.8	1.1	3.5	26.9	1.2	4.1	21.8	1.3	4.6	17.5	1.5	5.3	14.4	1.6	5.8
95	117.2	0.8	1.5	78.9	0.9	2.0	60.1	1.0	2.5	45.8	1.0	3.0	35.7	1.1	3.5	28.4	1.2	4.1	23.0	1.3	4.6	18.6	1.5	5.3	15.3	1.6	5.8
100	123.3	0.8	1.5	83.1	0.9	2.0	63.3	1.0	2.5	48.2	1.0	3.0	37.6	1.1	3.5	29.9	1.2	4.1	24.2	1.3	4.6	19.6	1.5	5.3	16.2	1.6	5.8
105	129.5	0.8	1.5	87.3	0.9	2.0	66.4	1.0	2.5	50.6	1.0	3.0	39.5	1.1	3.5	31.4	1.2	4.1	25.4	1.3	4.6	20.6	1.5	5.3	17.0	1.6	5.8
110	135.7	0.8	1.5	91.4	0.9	2.0	69.6	1.0	2.5	53.0	1.0	3.0	41.3	1.1	3.5	32.9	1.2	4.1	26.6	1.3	4.7	21.6	1.4	5.3	17.9	1.6	5.8
115	141.8	0.8	1.5	95.6	0.9	2.0	72.8	1.0	2.5	55.4	1.0	3.0	43.2	1.1	3.5	34.4	1.2	4.1	27.9	1.3	4.7	22.6	1.4	5.3	18.7	1.6	5.8
120	148.0	0.8	1.5	99.7	0.9	2.0	75.9	1.0	2.5	57.9	1.0	3.0	45.1	1.1	3.5	35.9	1.2	4.1	29.1	1.3	4.7	23.9	1.4	5.2	19.5	1.6	5.8
125	154.1	0.8	1.5	103.9	0.9	2.0	79.1	1.0	2.5	60.3	1.0	3.0	47.0	1.1	3.5	37.4	1.2	4.1	30.3	1.3	4.7	24.8	1.4	5.2	20.4	1.6	5.8
130	160.3	0.8	1.5	108.0	0.9	2.0	82.3	1.0	2.5	62.7	1.0	3.0	48.8	1.1	3.5	38.9	1.2	4.1	31.5	1.3	4.7	25.8	1.4	5.3	21.2	1.6	5.8
135	166.5	0.8	1.5	112.2	0.9	2.0	85.4	1.0	2.5	65.1	1.0	3.0	50.7	1.1	3.5	40.3	1.2	4.1	32.7	1.3	4.7	26.8	1.4	5.3	22.1	1.6	5.8
140	172.6	0.8	1.5	116.3	0.9	2.0	88.6	1.0	2.5	67.5	1.0	3.0	52.6	1.1	3.5	41.8	1.2	4.1	33.9	1.3	4.7	27.8	1.4	5.3	22.9	1.6	5.8
145	178.8	0.8	1.5	120.5	0.9	2.0	91.8	1.0	2.5	69.9	1.0	3.0	54.5	1.1	3.5	43.3	1.2	4.1	35.1	1.3	4.7	28.8	1.4	5.3	23.7	1.6	5.8
150	185.0	0.8	1.5	124.6	0.9	2.0	94.9	1.0	2.5	72.3	1.0	3.0	56.4	1.1	3.5	44.8	1.2	4.1	36.3	1.3	4.7	29.8	1.4	5.3	24.6	1.6	5.8

RETARDANCE "D" AND "C"

NOTE: Width and Depth dimensions are in feet; Velocity measurements are in feet per second;
Depth "D" does not include allowance for freeboard or settlement.

Table GS-4 Parabolic Grass Swale Design Sheet 9 of 14

V1 FOR RETARDANCE "D", TOP WIDTH (T), DEPTH (D), AND V2 FOR RETARDANCE "C"

Grade 3.00 Percent

Q CFS	V1=2.0			V1=2.5			V1=3.0			V1=3.5			V1=4.0			V1=4.5			V1=5.0			V1=5.5			V1=6.0		
	T	D	V2	T	D	V2	T	D	V2	T	D	V2	T	D	V2	T	D	V2	T	D	V2	T	D	V2	T	D	V2
5	7.4	0.7	1.4	4.9	0.8	1.9	3.2	1.0	2.3																		
10	15.1	0.7	1.4	10.2	0.8	1.9	7.6	0.8	2.4	5.7	0.9	2.9	4.0	1.1	3.4												
15	22.6	0.7	1.4	15.6	0.8	1.9	11.5	0.8	2.4	8.8	0.9	2.9	6.7	1.0	3.4	5.1	1.1	4.0									
20	30.1	0.7	1.4	20.7	0.8	1.9	15.5	0.8	2.4	11.8	0.9	2.9	9.2	0.9	3.4	7.2	1.0	4.0	5.5	1.2	4.6						
25	37.6	0.7	1.4	25.9	0.8	1.9	19.4	0.8	2.4	15.0	0.9	2.9	11.6	0.9	3.4	9.2	1.0	4.0	7.2	1.1	4.6	5.6	1.3	5.1			
30	45.1	0.7	1.4	31.1	0.8	1.9	23.3	0.8	2.4	18.0	0.9	2.9	14.0	0.9	3.4	11.1	1.0	4.0	8.9	1.1	4.6	7.1	1.2	5.2	5.3	1.5	5.7
35	52.7	0.7	1.4	36.2	0.8	1.9	27.1	0.8	2.4	21.0	0.9	2.9	16.5	0.9	3.4	13.0	1.0	4.0	10.5	1.1	4.6	8.4	1.2	5.2	6.7	1.4	5.7
40	60.2	0.7	1.4	41.4	0.8	1.9	31.0	0.8	2.4	24.0	0.9	2.9	18.9	0.9	3.4	14.9	1.0	4.0	12.0	1.1	4.6	9.8	1.2	5.2	7.9	1.3	5.7
45	67.7	0.7	1.4	46.6	0.8	1.9	34.9	0.8	2.4	27.0	0.9	2.9	21.2	0.9	3.4	17.0	1.0	4.0	13.6	1.1	4.6	11.1	1.2	5.2	9.1	1.3	5.7
50	75.2	0.7	1.4	51.8	0.8	1.9	38.8	0.8	2.4	29.9	0.9	2.9	23.6	0.9	3.4	18.9	1.0	4.0	15.2	1.1	4.6	12.4	1.2	5.2	10.2	1.3	5.7
55	82.8	0.7	1.4	56.9	0.8	1.9	42.6	0.8	2.4	32.9	0.9	2.9	25.9	0.9	3.4	20.8	1.0	4.0	16.7	1.1	4.6	13.7	1.2	5.2	11.3	1.3	5.7
60	90.3	0.7	1.4	62.1	0.8	1.9	46.5	0.8	2.4	35.9	0.9	2.9	28.3	0.9	3.4	22.7	1.0	4.0	18.5	1.1	4.5	14.9	1.2	5.2	12.4	1.3	5.7
65	97.8	0.7	1.4	67.3	0.8	1.9	50.4	0.8	2.4	38.9	0.9	2.9	30.6	0.9	3.4	24.6	1.0	4.0	20.0	1.1	4.5	16.2	1.2	5.2	13.5	1.3	5.7
70	105.3	0.7	1.4	72.4	0.8	1.9	54.3	0.8	2.4	41.9	0.9	2.9	33.0	0.9	3.4	26.4	1.0	4.0	21.5	1.1	4.5	17.5	1.2	5.2	14.5	1.3	5.7
75	112.8	0.7	1.4	77.6	0.8	1.9	58.1	0.8	2.4	44.9	0.9	2.9	35.3	0.9	3.4	28.3	1.0	4.0	23.1	1.1	4.5	19.1	1.2	5.1	15.6	1.3	5.7
80	120.4	0.7	1.4	82.8	0.8	1.9	62.0	0.8	2.4	47.9	0.9	2.9	37.7	0.9	3.4	30.2	1.0	4.0	24.6	1.1	4.5	20.3	1.2	5.1	16.7	1.3	5.7
85	127.9	0.7	1.4	88.0	0.8	1.9	65.9	0.8	2.4	50.9	0.9	2.9	40.1	0.9	3.4	32.1	1.0	4.0	26.1	1.1	4.5	21.6	1.2	5.1	17.8	1.2	5.7
90	135.4	0.7	1.4	93.1	0.8	1.9	69.8	0.8	2.4	53.9	0.9	2.9	42.4	0.9	3.4	34.0	1.0	4.0	27.7	1.1	4.5	22.9	1.2	5.1	18.9	1.2	5.7
95	142.9	0.7	1.4	98.3	0.8	1.9	73.6	0.8	2.4	56.9	0.9	2.9	44.8	0.9	3.4	35.9	1.0	4.0	29.2	1.1	4.5	24.1	1.2	5.1	20.2	1.2	5.7
100	150.5	0.7	1.4	103.5	0.8	1.9	77.5	0.8	2.4	59.9	0.9	2.9	47.1	0.9	3.4	37.8	1.0	4.0	30.7	1.1	4.5	25.4	1.2	5.1	21.2	1.2	5.7
105	158.0	0.7	1.4	108.7	0.8	1.9	81.4	0.8	2.4	62.8	0.9	2.9	49.5	0.9	3.4	39.6	1.0	4.0	32.3	1.1	4.5	26.7	1.2	5.1	22.3	1.2	5.7
110	165.5	0.7	1.4	113.8	0.8	1.9	85.3	0.8	2.4	65.8	0.9	2.9	51.8	0.9	3.4	41.5	1.0	4.0	33.8	1.1	4.6	27.9	1.2	5.1	23.3	1.2	5.7
115	173.0	0.7	1.4	119.0	0.8	1.9	89.1	0.8	2.4	68.8	0.9	2.9	54.2	0.9	3.4	43.4	1.0	4.0	35.4	1.1	4.6	29.2	1.2	5.1	24.4	1.2	5.7
120	180.5	0.7	1.4	124.2	0.8	1.9	93.0	0.8	2.4	71.8	0.9	2.9	56.5	0.9	3.4	45.3	1.0	4.0	36.9	1.1	4.6	30.5	1.2	5.1	25.5	1.2	5.7
125	188.1	0.7	1.4	129.4	0.8	1.9	96.9	0.8	2.4	74.8	0.9	2.9	58.9	0.9	3.4	47.2	1.0	4.0	38.4	1.1	4.6	31.7	1.2	5.1	26.5	1.2	5.7
130	195.6	0.7	1.4	134.5	0.8	1.9	100.8	0.8	2.4	77.8	0.9	2.9	61.2	0.9	3.4	49.1	1.0	4.0	40.0	1.1	4.6	33.0	1.2	5.1	27.6	1.2	5.7
135	203.1	0.7	1.4	139.7	0.8	1.9	104.6	0.8	2.4	80.8	0.9	2.9	63.6	0.9	3.4	51.0	1.0	4.0	41.5	1.1	4.6	34.3	1.2	5.1	28.6	1.2	5.7
140	210.6	0.7	1.4	144.9	0.8	1.9	108.5	0.8	2.4	83.8	0.9	2.9	66.0	0.9	3.4	52.8	1.0	4.0	43.0	1.1	4.6	35.6	1.2	5.1	29.7	1.2	5.7
145	218.2	0.7	1.4	150.1	0.8	1.9	112.4	0.8	2.4	86.8	0.9	2.9	68.3	0.9	3.4	54.7	1.0	4.0	44.6	1.1	4.6	36.8	1.2	5.1	30.7	1.2	5.7
150	225.7	0.7	1.4	155.2	0.8	1.9	116.3	0.8	2.4	89.8	0.9	2.9	70.7	0.9	3.4	56.6	1.0	4.0	46.1	1.1	4.6	38.1	1.2	5.1	31.8	1.2	5.7

RETARDANCE "D" AND "C"

NOTE: Width and Depth dir sions are in feet; Velocity measurements are in feet per second; includ lowance for freeboarc settlement.

Table GS-4 Parabolic Grass Swale Design Sheet 10 of 14

V1 FOR RETARDANCE "D", TOP WIDTH (T), DEPTH (D), AND V2 FOR RETARDANCE "C"

Grade 4.00 Percent

Q CFS	V1=2.0			V1=2.5			V1=3.0			V1=3.5			V1=4.0			V1=4.5			V1=5.0			V1=5.5			V1=6.0		
	T	D	V2	T	D	V2	T	D	V2	T	D	V2	T	D	V2	T	D	V2	T	D	V2	T	D	V2	T	D	V2
5	8.5	0.6	1.4	5.9	0.7	1.8	4.1	0.8	2.3																		
10	17.2	0.6	1.4	12.1	0.7	1.8	8.8	0.7	2.3	6.7	0.8	2.8	5.2	0.9	3.3	3.8	1.0	3.9									
15	25.8	0.6	1.4	18.1	0.7	1.8	13.4	0.7	2.3	10.3	0.8	2.8	8.1	0.8	3.4	6.4	0.9	3.9	4.9	1.0	4.5						
20	34.4	0.6	1.4	24.2	0.7	1.8	17.8	0.7	2.3	13.9	0.8	2.8	10.9	0.8	3.4	8.7	0.9	3.9	6.9	1.0	4.5	5.5	1.1	5.0			
25	43.0	0.6	1.4	30.2	0.7	1.9	22.3	0.7	2.3	17.4	0.8	2.8	13.8	0.8	3.3	10.9	0.9	3.9	8.8	1.0	4.5	7.1	1.0	5.1	5.7	1.2	5.6
30	51.6	0.6	1.4	36.3	0.7	1.9	26.7	0.7	2.3	20.8	0.8	2.8	16.5	0.8	3.3	13.2	0.9	3.9	10.7	0.9	4.5	8.7	1.0	5.1	7.1	1.1	5.6
35	60.2	0.6	1.4	42.3	0.7	1.9	31.1	0.7	2.3	24.3	0.8	2.8	19.3	0.8	3.4	15.6	0.9	3.9	12.5	0.9	4.5	10.3	1.0	5.0	8.4	1.1	5.6
40	68.8	0.6	1.4	48.3	0.7	1.9	35.6	0.7	2.3	27.8	0.8	2.8	22.0	0.8	3.4	17.8	0.9	3.9	14.4	0.9	4.5	11.8	1.0	5.0	9.8	1.1	5.7
45	77.4	0.6	1.4	54.4	0.7	1.9	40.0	0.7	2.4	31.2	0.8	2.8	24.8	0.8	3.4	20.0	0.9	3.9	16.4	0.9	4.4	13.3	1.0	5.0	11.1	1.1	5.7
50	86.0	0.6	1.4	60.4	0.7	1.9	44.5	0.7	2.4	34.7	0.8	2.8	27.5	0.8	3.4	22.2	0.9	3.9	18.2	0.9	4.4	14.9	1.0	5.0	12.3	1.1	5.7
55	94.6	0.6	1.4	66.5	0.7	1.9	48.9	0.7	2.4	38.2	0.8	2.8	30.3	0.8	3.4	24.4	0.9	3.9	20.0	0.9	4.4	16.6	1.0	5.0	13.6	1.1	5.7
60	103.2	0.6	1.4	72.5	0.7	1.9	53.4	0.7	2.4	41.7	0.8	2.8	33.0	0.8	3.4	26.6	0.9	3.9	21.8	0.9	4.5	18.1	1.0	5.0	14.9	1.1	5.7
65	111.8	0.6	1.4	78.5	0.7	1.9	57.8	0.7	2.4	45.1	0.8	2.8	35.8	0.8	3.4	28.9	0.9	3.9	23.6	0.9	4.5	19.6	1.0	5.0	16.2	1.1	5.7
70	120.4	0.6	1.4	84.6	0.7	1.9	62.3	0.7	2.4	48.6	0.8	2.8	38.6	0.8	3.4	31.1	0.9	3.9	25.4	0.9	4.5	21.1	1.0	5.0	17.7	1.1	5.6
75	129.0	0.6	1.4	90.6	0.7	1.9	66.7	0.7	2.4	52.1	0.8	2.8	41.3	0.8	3.4	33.3	0.9	3.9	27.2	0.9	4.5	22.6	1.0	5.0	19.0	1.1	5.6
80	137.6	0.6	1.4	96.7	0.7	1.9	71.2	0.7	2.4	55.5	0.8	2.8	44.1	0.8	3.4	35.5	0.9	3.9	29.1	0.9	4.5	24.1	1.0	5.0	20.2	1.1	5.6
85	146.2	0.6	1.4	102.7	0.7	1.9	75.6	0.7	2.4	59.0	0.8	2.8	46.8	0.8	3.4	37.7	0.9	3.9	30.9	0.9	4.5	25.6	1.0	5.0	21.5	1.1	5.6
90	154.8	0.6	1.4	108.7	0.7	1.9	80.0	0.7	2.4	62.5	0.8	2.8	49.6	0.8	3.4	39.9	0.9	3.9	32.7	0.9	4.5	27.1	1.0	5.0	22.8	1.1	5.6
95	163.4	0.6	1.4	114.8	0.7	1.9	84.5	0.7	2.4	65.9	0.8	2.8	52.3	0.8	3.4	42.2	0.9	3.9	34.5	0.9	4.5	28.6	1.0	5.0	24.0	1.1	5.6
100	172.0	0.6	1.4	120.8	0.7	1.9	88.9	0.7	2.4	69.4	0.8	2.8	55.1	0.8	3.4	44.4	0.9	3.9	36.3	0.9	4.5	30.1	1.0	5.0	25.3	1.1	5.6
105	180.6	0.6	1.4	126.9	0.7	1.9	93.4	0.7	2.4	72.9	0.8	2.8	57.8	0.8	3.4	46.6	0.9	3.9	38.1	0.9	4.5	31.6	1.0	5.0	26.5	1.1	5.6
110	189.2	0.6	1.4	132.9	0.7	1.9	97.8	0.7	2.4	76.3	0.8	2.8	60.6	0.8	3.4	48.8	0.9	3.9	39.9	0.9	4.5	33.1	1.0	5.0	27.8	1.1	5.6
115	197.8	0.6	1.4	138.9	0.7	1.9	102.3	0.7	2.4	79.8	0.8	2.8	63.3	0.8	3.4	51.0	0.9	3.9	41.7	0.9	4.5	34.6	1.0	5.0	29.0	1.1	5.6
120	206.4	0.6	1.4	145.0	0.7	1.9	106.7	0.7	2.4	83.3	0.8	2.8	66.1	0.8	3.4	53.3	0.9	3.9	43.6	0.9	4.5	36.1	1.0	5.0	30.2	1.1	5.7
125	215.0	0.6	1.4	151.0	0.7	1.9	111.2	0.7	2.4	86.8	0.8	2.8	68.8	0.8	3.4	55.5	0.9	3.9	45.4	0.9	4.5	37.6	1.0	5.0	31.5	1.1	5.7
130	223.7	0.6	1.4	157.1	0.7	1.9	115.6	0.7	2.4	90.2	0.8	2.8	71.6	0.8	3.4	57.7	0.9	3.9	47.2	0.9	4.5	39.1	1.0	5.0	32.7	1.1	5.7
135	232.3	0.6	1.4	163.1	0.7	1.9	120.1	0.7	2.4	93.7	0.8	2.8	74.3	0.8	3.4	59.9	0.9	3.9	49.0	0.9	4.5	40.6	1.0	5.0	34.0	1.1	5.7
140	240.9	0.6	1.4	169.1	0.7	1.9	124.5	0.7	2.4	97.2	0.8	2.8	77.1	0.8	3.4	62.1	0.9	3.9	50.8	0.9	4.5	42.1	1.0	5.0	35.2	1.1	5.7
145	249.5	0.6	1.4	175.2	0.7	1.9	129.0	0.7	2.4	100.6	0.8	2.8	79.8	0.8	3.4	64.3	0.9	3.9	52.6	0.9	4.5	43.6	1.0	5.0	36.5	1.1	5.7
150	258.1	0.6	1.4	181.2	0.7	1.9	133.4	0.7	2.4	104.1	0.8	2.8	82.6	0.8	3.4	66.6	0.9	3.9	54.4	0.9	4.5	45.1	1.0	5.0	37.8	1.1	5.7

RETARDANCE "D" AND "C"

NOTE: Width and Depth dimensions are in feet; Velocity measurements are in feet per second;
Depth "D" does not include allowance for freeboard or settlement.

Table GS-4 Parabolic Grass Swale Design Sheet 11 of 14

V1 FOR RETARDANCE "D", TOP WIDTH (T), DEPTH (D), AND V2 FOR RETARDANCE "C"

Grade 5.00 Percent

Q CFS	V1=2.0			V1=2.5			V1=3.0			V1=3.5			V1=4.0			V1=4.5			V1=5.0			V1=5.5			V1=6.0		
	T	D	V2	T	D	V2	T	D	V2	T	D	V2	T	D	V2	T	D	V2	T	D	V2	T	D	V2	T	D	V2
5	9.5	0.6	1.4	6.7	0.6	1.8	4.7	0.7	2.3	3.5	0.8	2.8															
10	19.0	0.6	1.4	13.7	0.6	1.8	9.7	0.7	2.3	7.6	0.7	2.8	6.0	0.8	3.3	4.7	0.8	3.8	3.4	1.0	4.4						
15	28.5	0.6	1.4	20.5	0.6	1.8	14.8	0.7	2.3	11.7	0.7	2.8	9.2	0.7	3.3	7.3	0.8	3.8	5.9	0.9	4.4	4.7	1.0	5.0			
20	38.0	0.6	1.4	27.3	0.6	1.8	19.7	0.7	2.3	15.5	0.7	2.8	12.4	0.7	3.3	9.9	0.8	3.8	8.0	0.9	4.4	6.5	0.9	4.9	5.3	1.0	5.5
25	47.5	0.6	1.4	34.1	0.6	1.8	24.6	0.7	2.3	19.4	0.7	2.8	15.5	0.7	3.3	12.6	0.8	3.8	10.1	0.8	4.4	8.3	0.9	5.0	6.8	1.0	5.6
30	57.0	0.6	1.4	40.9	0.6	1.8	29.5	0.7	2.3	23.3	0.7	2.8	18.6	0.7	3.3	15.1	0.8	3.8	12.2	0.8	4.4	10.1	0.9	5.0	8.3	1.0	5.6
35	66.5	0.6	1.4	47.7	0.6	1.8	34.4	0.7	2.3	27.2	0.7	2.8	21.7	0.7	3.3	17.6	0.8	3.8	14.5	0.8	4.4	11.8	0.9	5.0	9.8	1.0	5.6
40	76.0	0.6	1.4	54.6	0.6	1.8	39.4	0.7	2.3	31.0	0.7	2.8	24.8	0.7	3.3	20.1	0.8	3.8	16.5	0.8	4.4	13.6	0.9	5.0	11.3	1.0	5.5
45	85.5	0.6	1.4	61.4	0.6	1.8	44.3	0.7	2.3	34.9	0.7	2.8	27.9	0.7	3.3	22.6	0.8	3.8	18.6	0.8	4.4	15.5	0.9	4.9	12.8	1.0	5.5
50	95.0	0.6	1.4	68.2	0.6	1.8	49.2	0.7	2.3	38.8	0.7	2.8	31.0	0.7	3.3	25.1	0.8	3.8	20.6	0.8	4.4	17.2	0.9	4.9	14.3	1.0	5.5
55	104.6	0.6	1.4	75.0	0.6	1.8	54.1	0.7	2.3	42.7	0.7	2.8	34.1	0.7	3.3	27.6	0.8	3.8	22.7	0.8	4.4	18.9	0.9	4.9	15.9	0.9	5.5
60	114.1	0.6	1.4	81.8	0.6	1.8	59.0	0.7	2.3	46.6	0.7	2.8	37.2	0.7	3.3	30.1	0.8	3.8	24.7	0.8	4.4	20.6	0.9	4.9	17.3	0.9	5.5
65	123.6	0.6	1.4	88.6	0.6	1.8	63.9	0.7	2.3	50.4	0.7	2.8	40.3	0.7	3.3	32.6	0.8	3.8	26.8	0.8	4.4	22.3	0.9	4.9	18.8	0.9	5.5
70	133.1	0.6	1.4	95.5	0.6	1.8	68.9	0.7	2.3	54.3	0.7	2.8	43.4	0.7	3.3	35.1	0.8	3.8	28.9	0.8	4.4	24.0	0.9	4.9	20.2	0.9	5.5
75	142.6	0.6	1.4	102.3	0.6	1.8	73.8	0.7	2.3	58.2	0.7	2.8	46.5	0.7	3.3	37.7	0.8	3.8	30.9	0.8	4.4	25.7	0.9	4.9	21.6	0.9	5.5
80	152.1	0.6	1.4	109.1	0.6	1.8	78.7	0.7	2.3	62.1	0.7	2.8	49.6	0.7	3.3	40.2	0.8	3.8	33.0	0.8	4.4	27.4	0.9	4.9	23.1	0.9	5.5
85	161.6	0.6	1.4	115.9	0.6	1.8	83.6	0.7	2.3	65.9	0.7	2.8	52.7	0.7	3.3	42.7	0.8	3.8	35.0	0.8	4.4	29.1	0.9	5.0	24.5	0.9	5.5
90	171.1	0.6	1.4	122.7	0.6	1.8	88.5	0.7	2.3	69.8	0.7	2.8	55.8	0.7	3.3	45.2	0.8	3.8	37.1	0.8	4.4	30.9	0.9	5.0	26.0	0.9	5.5
95	180.6	0.6	1.4	129.6	0.6	1.8	93.4	0.7	2.3	73.7	0.7	2.8	58.9	0.7	3.3	47.7	0.8	3.8	39.2	0.8	4.4	32.6	0.9	5.0	27.4	0.9	5.5
100	190.1	0.6	1.4	136.4	0.6	1.8	98.4	0.7	2.3	77.6	0.7	2.8	62.0	0.7	3.3	50.2	0.8	3.8	41.2	0.8	4.4	34.3	0.9	5.0	28.8	0.9	5.5
105	199.6	0.6	1.4	143.2	0.6	1.8	103.3	0.7	2.3	81.5	0.7	2.8	65.1	0.7	3.3	52.7	0.8	3.8	43.3	0.8	4.4	36.0	0.9	5.0	30.3	0.9	5.5
110	209.1	0.6	1.4	150.0	0.6	1.8	108.2	0.7	2.3	85.3	0.7	2.8	68.2	0.7	3.3	55.2	0.8	3.8	45.3	0.8	4.4	37.7	0.9	5.0	31.7	0.9	5.5
115	218.6	0.6	1.4	156.8	0.6	1.8	113.1	0.7	2.3	89.2	0.7	2.8	71.3	0.7	3.3	57.7	0.8	3.8	47.4	0.8	4.4	39.4	0.9	5.0	33.2	0.9	5.5
120	228.1	0.6	1.4	163.6	0.6	1.8	118.0	0.7	2.3	93.1	0.7	2.8	74.3	0.7	3.3	60.2	0.8	3.8	49.5	0.8	4.4	41.1	0.9	5.0	34.6	0.9	5.5
125	237.6	0.6	1.4	170.5	0.6	1.8	123.0	0.7	2.3	97.0	0.7	2.8	77.4	0.7	3.3	62.7	0.8	3.8	51.5	0.8	4.4	42.8	0.9	5.0	36.0	0.9	5.5
130	247.1	0.6	1.4	177.3	0.6	1.8	127.9	0.7	2.3	100.8	0.7	2.8	80.5	0.7	3.3	65.2	0.8	3.8	53.6	0.8	4.4	44.6	0.9	5.0	37.5	0.9	5.5
135	256.6	0.6	1.4	184.1	0.6	1.8	132.8	0.7	2.3	104.7	0.7	2.8	83.6	0.7	3.3	67.8	0.8	3.8	55.6	0.8	4.4	46.3	0.9	5.0	38.9	0.9	5.5
140	266.1	0.6	1.4	190.9	0.6	1.8	137.7	0.7	2.3	108.6	0.7	2.8	86.7	0.7	3.3	70.3	0.8	3.8	57.7	0.8	4.4	48.0	0.9	5.0	40.4	0.9	5.5
145	275.6	0.6	1.4	197.7	0.6	1.8	142.6	0.7	2.3	112.5	0.7	2.8	89.8	0.7	3.3	72.8	0.8	3.8	59.8	0.8	4.4	49.7	0.9	5.0	41.8	0.9	5.5
150	285.1	0.6	1.4	204.6	0.6	1.8	147.5	0.7	2.3	116.4	0.7	2.8	92.9	0.7	3.3	75.3	0.8	3.8	61.8	0.8	4.4	51.4	0.9	5.0	43.2	0.9	5.5

RETARDANCE "D" AND "C"

NOTE: Width and Depth dimensions are in feet; Velocity measurements are in feet per second:
Depth "D" does not include allowance for freeboard or settlement.

Table GS-4 Parabolic Grass Swale Design Sheet 12 of 14

V1 FOR RETARDANCE "D", TOP WIDTH (T), DEPTH (D), AND V2 FOR RETARDANCE "C"

Grade 6.00 Percent

Q CFS	V1=2.0			V1=2.5			V1=3.0			V1=3.5			V1=4.0			V1=4.5			V1=5.0			V1=5.5			V1=6.0		
	T	D	V2	T	D	V2	T	D	V2	T	D	V2	T	D	V2	T	D	V2	T	D	V2	T	D	V2	T	D	V2
5	10.6	0.5	1.3	7.3	0.6	1.8	5.3	0.6	2.3	4.0	0.7	2.8	2.9	0.8	3.2												
10	21.1	0.5	1.3	14.7	0.6	1.8	10.9	0.6	2.3	8.4	0.7	2.8	6.6	0.7	3.2	5.3	0.8	3.8	4.2	0.8	4.3						
15	31.6	0.5	1.3	22.1	0.6	1.8	16.3	0.6	2.3	12.7	0.6	2.7	10.1	0.7	3.3	8.2	0.7	3.8	6.6	0.8	4.3	5.4	0.9	4.9	4.3	1.0	5.5
20	42.1	0.5	1.3	29.5	0.6	1.8	21.7	0.6	2.3	17.0	0.6	2.7	13.6	0.7	3.2	11.1	0.7	3.7	9.0	0.8	4.3	7.4	0.8	4.9	6.1	0.9	5.5
25	52.7	0.5	1.3	36.8	0.6	1.8	27.1	0.6	2.3	21.2	0.6	2.8	17.0	0.7	3.2	13.9	0.7	3.8	11.3	0.8	4.3	9.3	0.8	4.9	7.8	0.9	5.5
30	63.2	0.5	1.3	44.2	0.6	1.8	32.5	0.6	2.3	25.4	0.6	2.8	20.4	0.7	3.2	16.6	0.7	3.8	13.7	0.8	4.3	11.3	0.8	4.9	9.4	0.9	5.5
35	73.7	0.5	1.3	51.6	0.6	1.8	38.0	0.6	2.3	29.7	0.6	2.8	23.8	0.7	3.2	19.4	0.7	3.8	16.0	0.8	4.3	13.4	0.8	4.9	11.1	0.9	5.5
40	84.2	0.5	1.3	58.9	0.6	1.8	43.4	0.6	2.3	33.9	0.6	2.8	27.2	0.7	3.3	22.2	0.7	3.8	18.3	0.8	4.3	15.3	0.8	4.9	12.7	0.9	5.5
45	94.8	0.5	1.3	66.3	0.6	1.8	48.8	0.6	2.3	38.2	0.6	2.8	30.7	0.7	3.3	24.9	0.7	3.8	20.6	0.8	4.3	17.2	0.8	4.9	14.5	0.9	5.4
50	105.3	0.5	1.3	73.6	0.6	1.8	54.2	0.6	2.3	42.4	0.6	2.8	34.1	0.7	3.3	27.7	0.7	3.8	22.8	0.8	4.3	19.1	0.8	4.9	16.1	0.9	5.4
55	115.8	0.5	1.3	81.0	0.6	1.8	59.7	0.6	2.3	46.6	0.6	2.8	37.5	0.7	3.3	30.5	0.7	3.8	25.1	0.8	4.3	21.0	0.8	4.9	17.7	0.9	5.4
60	126.4	0.5	1.3	88.4	0.6	1.8	65.1	0.6	2.3	50.9	0.6	2.8	40.9	0.7	3.3	33.3	0.7	3.8	27.4	0.8	4.3	22.9	0.8	4.9	19.3	0.9	5.4
65	136.9	0.5	1.3	95.7	0.6	1.8	70.5	0.6	2.3	55.1	0.6	2.8	44.3	0.7	3.3	36.0	0.7	3.8	29.7	0.8	4.3	24.8	0.8	4.9	20.9	0.9	5.4
70	147.4	0.5	1.3	103.1	0.6	1.8	75.9	0.6	2.3	59.3	0.6	2.8	47.7	0.7	3.3	38.8	0.7	3.8	32.0	0.8	4.3	26.7	0.8	4.9	22.5	0.9	5.4
75	158.0	0.5	1.3	110.5	0.6	1.8	81.3	0.6	2.3	63.6	0.6	2.8	51.1	0.7	3.3	41.6	0.7	3.8	34.3	0.8	4.3	28.6	0.8	4.9	24.1	0.9	5.4
80	168.5	0.5	1.3	117.8	0.6	1.8	86.8	0.6	2.3	67.8	0.6	2.8	54.5	0.7	3.3	44.3	0.7	3.8	36.5	0.8	4.3	30.5	0.8	4.9	25.7	0.9	5.5
85	179.0	0.5	1.3	125.2	0.6	1.8	92.2	0.6	2.3	72.0	0.6	2.8	57.9	0.7	3.3	47.1	0.7	3.8	38.8	0.8	4.3	32.4	0.8	4.9	27.3	0.9	5.5
90	189.6	0.5	1.3	132.6	0.6	1.8	97.6	0.6	2.3	76.3	0.6	2.8	61.3	0.7	3.3	49.9	0.7	3.8	41.1	0.8	4.3	34.3	0.8	4.9	28.9	0.9	5.5
95	200.1	0.5	1.3	139.9	0.6	1.8	103.0	0.6	2.3	80.5	0.6	2.8	64.7	0.7	3.3	52.6	0.7	3.8	43.4	0.8	4.3	36.2	0.8	4.9	30.5	0.9	5.5
100	210.6	0.5	1.3	147.3	0.6	1.8	108.5	0.6	2.3	84.8	0.6	2.8	68.1	0.7	3.3	55.4	0.7	3.8	45.7	0.8	4.3	38.1	0.8	4.9	32.1	0.9	5.5
105	221.1	0.5	1.3	154.6	0.6	1.8	113.9	0.6	2.3	89.0	0.6	2.8	71.5	0.7	3.3	58.2	0.7	3.8	47.9	0.8	4.3	40.0	0.8	4.9	33.7	0.9	5.5
110	231.7	0.5	1.3	162.0	0.6	1.8	119.3	0.6	2.3	93.2	0.6	2.8	74.9	0.7	3.3	60.9	0.7	3.8	50.2	0.8	4.3	41.9	0.8	4.9	35.3	0.9	5.5
115	242.2	0.5	1.3	169.4	0.6	1.8	124.7	0.6	2.3	97.5	0.6	2.8	78.3	0.7	3.3	63.7	0.7	3.8	52.5	0.8	4.3	43.8	0.8	4.9	36.9	0.9	5.5
120	252.7	0.5	1.3	176.7	0.6	1.8	130.2	0.6	2.3	101.7	0.6	2.8	81.7	0.7	3.3	66.5	0.7	3.8	54.8	0.8	4.3	45.7	0.8	4.9	38.5	0.9	5.5
125	263.3	0.5	1.3	184.1	0.6	1.8	135.6	0.6	2.3	106.0	0.6	2.8	85.1	0.7	3.3	69.3	0.7	3.8	57.1	0.8	4.3	47.6	0.8	4.9	40.1	0.9	5.5
130	273.8	0.5	1.3	191.5	0.6	1.8	141.0	0.6	2.3	110.2	0.6	2.8	88.5	0.7	3.3	72.0	0.7	3.8	59.4	0.8	4.3	49.5	0.8	4.9	41.7	0.9	5.5
135	284.3	0.5	1.3	198.8	0.6	1.8	146.4	0.6	2.3	114.4	0.6	2.8	91.9	0.7	3.3	74.8	0.7	3.8	61.6	0.8	4.3	51.4	0.8	4.9	43.3	0.9	5.5
140	294.9	0.5	1.3	206.2	0.6	1.8	151.8	0.6	2.3	118.7	0.6	2.8	95.3	0.7	3.3	77.6	0.7	3.8	63.9	0.8	4.3	53.3	0.8	4.9	44.9	0.9	5.5
145	305.4	0.5	1.3	213.6	0.6	1.8	157.3	0.6	2.3	122.9	0.6	2.8	98.7	0.7	3.3	80.3	0.7	3.8	66.2	0.8	4.3	55.2	0.8	4.9	46.5	0.9	5.5
150	315.9	0.5	1.3	220.9	0.6	1.8	162.7	0.6	2.3	127.1	0.6	2.8	102.1	0.7	3.3	83.1	0.7	3.8	68.5	0.8	4.3	57.1	0.8	4.9	48.1	0.9	5.5

RETARDANCE "D" AND "C"

NOTE: Width and Depth dimensions are in feet; Velocity measurements are in feet per second:
Depth "D" does not include allowance for freeboard or settlement.

Table GS-4 Parabolic Grass Swale Design Sheet 13 of 14

V1 FOR RETARDANCE "D", TOP WIDTH (T), DEPTH' (D), AND V2 FOR RETARDANCE "C"

Grade 8.00 Percent

Q̄ CFS	V1=2.0			V1=2.5			V1=3.0			V1=3.5			V1=4.0			V1=4.5			V1=5.0			V1=5.5			V1=6.0		
	T̄	D̄	V̄2	T̄	D̄	V̄2	T̄	D̄	V̄2	T̄	D̄	V̄2	T̄	D̄	V̄2	T̄	D̄	V̄2	T̄	D̄	V̄2	T̄	D̄	V̄2	T̄	D̄	V̄2
5	12.0	0.5	1.3	8.5	0.5	1.7	6.2	0.5	2.2	4.6	0.6	2.7	3.7	0.6	3.2	2.9	0.7	3.6									
10	24.1	0.5	1.3	16.9	0.5	1.7	12.6	0.5	2.2	9.6	0.6	2.7	7.8	0.6	3.2	6.3	0.6	3.7	5.1	0.7	4.2	4.2	0.8	4.8	3.2	0.9	5.3
15	36.1	0.5	1.3	25.3	0.5	1.7	18.9	0.5	2.2	14.4	0.6	2.7	11.8	0.6	3.2	9.7	0.6	3.7	7.9	0.7	4.2	6.5	0.7	4.8	5.4	0.8	5.3
20	48.1	0.5	1.3	33.8	0.5	1.7	25.2	0.5	2.2	19.2	0.6	2.7	15.8	0.6	3.2	12.9	0.6	3.7	10.7	0.7	4.2	8.8	0.7	4.8	7.4	0.8	5.3
25	60.1	0.5	1.3	42.2	0.5	1.7	31.5	0.5	2.2	24.0	0.6	2.7	19.7	0.6	3.2	16.2	0.6	3.7	13.4	0.7	4.2	11.2	0.7	4.7	9.3	0.8	5.3
30	72.1	0.5	1.3	50.6	0.5	1.7	37.8	0.5	2.2	28.8	0.6	2.7	23.6	0.6	3.2	19.4	0.6	3.7	16.1	0.7	4.2	13.5	0.7	4.8	11.3	0.7	5.3
35	84.1	0.5	1.3	59.1	0.5	1.7	44.1	0.5	2.2	33.6	0.6	2.7	27.6	0.6	3.2	22.6	0.6	3.7	18.7	0.7	4.2	15.7	0.7	4.8	13.3	0.7	5.3
40	96.2	0.5	1.3	67.5	0.5	1.7	50.4	0.5	2.2	38.4	0.6	2.7	31.5	0.6	3.2	25.8	0.6	3.7	21.4	0.7	4.2	17.9	0.7	4.8	15.2	0.7	5.3
45	108.2	0.5	1.3	76.0	0.5	1.7	56.7	0.5	2.2	43.2	0.6	2.7	35.4	0.6	3.2	29.0	0.6	3.7	24.1	0.7	4.2	20.2	0.7	4.8	17.1	0.7	5.3
50	120.2	0.5	1.3	84.4	0.5	1.7	63.0	0.5	2.2	48.0	0.6	2.7	39.4	0.6	3.2	32.3	0.6	3.7	26.8	0.7	4.2	22.4	0.7	4.8	19.0	0.7	5.3
55	132.2	0.5	1.3	92.8	0.5	1.7	69.3	0.5	2.2	52.8	0.6	2.7	43.3	0.6	3.2	35.5	0.6	3.7	29.4	0.7	4.2	24.7	0.7	4.8	20.9	0.7	5.3
60	144.2	0.5	1.3	101.3	0.5	1.7	75.6	0.5	2.2	57.6	0.6	2.7	47.2	0.6	3.2	38.7	0.6	3.7	32.1	0.7	4.2	26.9	0.7	4.8	22.8	0.7	5.3
65	156.3	0.5	1.3	109.7	0.5	1.7	81.8	0.5	2.2	62.4	0.6	2.7	51.2	0.6	3.2	41.9	0.6	3.7	34.8	0.7	4.2	29.1	0.7	4.8	24.7	0.7	5.3
70	168.3	0.5	1.3	118.2	0.5	1.7	88.1	0.5	2.2	67.2	0.6	2.7	55.1	0.6	3.2	45.2	0.6	3.7	37.5	0.7	4.2	31.4	0.7	4.8	26.6	0.7	5.3
75	180.3	0.5	1.3	126.6	0.5	1.7	94.4	0.5	2.2	72.0	0.6	2.7	59.0	0.6	3.2	48.4	0.6	3.7	40.1	0.7	4.2	33.6	0.7	4.8	28.5	0.7	5.3
80	192.3	0.5	1.3	135.0	0.5	1.7	100.7	0.5	2.2	76.8	0.6	2.7	63.0	0.6	3.2	51.6	0.6	3.7	42.8	0.7	4.2	35.9	0.7	4.8	30.3	0.7	5.3
85	204.3	0.5	1.3	143.5	0.5	1.7	107.0	0.5	2.2	81.6	0.6	2.7	66.9	0.6	3.2	54.9	0.6	3.7	45.5	0.7	4.2	38.1	0.7	4.8	32.2	0.7	5.3
90	216.4	0.5	1.3	151.9	0.5	1.7	113.3	0.5	2.2	86.4	0.6	2.7	70.8	0.6	3.2	58.1	0.6	3.7	48.1	0.7	4.2	40.3	0.7	4.8	34.1	0.7	5.3
95	228.4	0.5	1.3	160.3	0.5	1.7	119.6	0.5	2.2	91.2	0.6	2.7	74.8	0.6	3.2	61.3	0.6	3.7	50.8	0.7	4.2	42.6	0.7	4.8	36.0	0.7	5.3
100	240.4	0.5	1.3	168.8	0.5	1.7	125.9	0.5	2.2	96.0	0.6	2.7	78.7	0.6	3.2	64.5	0.6	3.7	53.5	0.7	4.2	44.8	0.7	4.8	37.9	0.7	5.3
105	252.4	0.5	1.3	177.2	0.5	1.7	132.2	0.5	2.2	100.8	0.6	2.7	82.6	0.6	3.2	67.8	0.6	3.7	56.2	0.7	4.2	47.1	0.7	4.8	39.8	0.7	5.3
110	264.4	0.5	1.3	185.7	0.5	1.7	138.5	0.5	2.2	105.6	0.6	2.7	86.6	0.6	3.2	71.0	0.6	3.7	58.8	0.7	4.2	49.3	0.7	4.8	41.7	0.7	5.3
115	276.5	0.5	1.3	194.1	0.5	1.7	144.8	0.5	2.2	110.4	0.6	2.7	90.5	0.6	3.2	74.2	0.6	3.7	61.5	0.7	4.2	51.5	0.7	4.8	43.6	0.7	5.3
120	288.5	0.5	1.3	202.5	0.5	1.7	151.1	0.5	2.2	115.2	0.6	2.7	94.4	0.6	3.2	77.4	0.6	3.7	64.2	0.7	4.2	53.8	0.7	4.8	45.5	0.7	5.3
125	300.5	0.5	1.3	211.0	0.5	1.7	157.4	0.5	2.2	120.0	0.6	2.7	98.4	0.6	3.2	80.7	0.6	3.7	66.9	0.7	4.2	56.0	0.7	4.8	47.4	0.7	5.3
130	312.5	0.5	1.3	219.4	0.5	1.7	163.7	0.5	2.2	124.8	0.6	2.7	102.3	0.6	3.2	83.9	0.6	3.7	69.5	0.7	4.2	58.3	0.7	4.8	49.3	0.7	5.3
135	324.5	0.5	1.3	227.9	0.5	1.7	170.0	0.5	2.2	129.6	0.6	2.7	106.2	0.6	3.2	87.1	0.6	3.7	72.2	0.7	4.2	60.5	0.7	4.8	51.2	0.7	5.3
140	336.6	0.5	1.3	236.3	0.5	1.7	176.3	0.5	2.2	134.4	0.6	2.7	110.2	0.6	3.2	90.3	0.6	3.7	74.9	0.7	4.2	62.7	0.7	4.8	53.1	0.7	5.3
145	348.6	0.5	1.3	244.7	0.5	1.7	182.6	0.5	2.2	139.2	0.6	2.7	114.1	0.6	3.2	93.6	0.6	3.7	77.6	0.7	4.2	65.0	0.7	4.8	55.0	0.7	5.3
150	360.6	0.5	1.3	253.2	0.5	1.7	188.9	0.5	2.2	144.0	0.6	2.7	118.0	0.6	3.2	96.8	0.6	3.7	80.2	0.7	4.2	67.2	0.7	4.8	56.9	0.7	5.3

RETARDANCE "D" AND "C"

NOTE: Width and Depth dimensions are in feet; Velocity measurements are in feet per second.
Depth "D" does not include allowance for freeboard or settlement

Table GS-4 Parabolic Grass Swale Design Sheet 14 of 14

V1 FOR RETARDANCE "D", TOP WIDTH (T), DEPTH (D), AND V2 FOR RETARDANCE "C"

Grade 10.00 Percent

Q CFS	V1=2.0			V1=2.5			V1=3.0			V1=3.5			V1=4.0			V1=4.5			V1=5.0			V1=5.5			V1=6.0		
	T	D	V2	T	D	V2	T	D	V2	T	D	V2	T	D	V2	T	D	V2	T	D	V2	T	D	V2	T	D	V2
5	13.3	0.4	1.3	9.4	0.5	1.7	6.8	0.5	2.2	5.3	0.5	2.6	4.1	0.6	3.2	3.4	0.6	3.6	2.6	0.7	4.1						
10	26.6	0.4	1.3	18.7	0.5	1.7	13.8	0.5	2.2	10.9	0.5	2.6	8.5	0.6	3.2	7.1	0.6	3.6	5.9	0.6	4.1	4.9	0.7	4.7	4.0	0.7	5.3
15	39.9	0.4	1.3	28.0	0.5	1.7	20.7	0.5	2.2	16.3	0.5	2.6	12.8	0.6	3.2	10.9	0.6	3.6	9.0	0.6	4.1	7.5	0.6	4.7	6.3	0.7	5.2
20	53.2	0.4	1.3	37.4	0.5	1.7	27.6	0.5	2.2	21.7	0.5	2.7	17.0	0.6	3.2	14.5	0.6	3.6	12.1	0.6	4.1	10.2	0.6	4.6	8.5	0.7	5.2
25	66.5	0.4	1.3	46.7	0.5	1.7	34.5	0.5	2.2	27.1	0.5	2.7	21.3	0.6	3.2	18.1	0.6	3.6	15.1	0.6	4.1	12.7	0.6	4.7	10.8	0.7	5.2
30	79.8	0.4	1.3	56.1	0.5	1.7	41.4	0.5	2.2	32.5	0.5	2.7	25.5	0.6	3.2	21.7	0.6	3.6	18.1	0.6	4.1	15.2	0.6	4.7	12.9	0.7	5.2
35	93.1	0.4	1.3	65.4	0.5	1.7	48.3	0.5	2.2	37.9	0.5	2.7	29.8	0.6	3.2	25.3	0.6	3.6	21.1	0.6	4.1	17.8	0.6	4.7	15.1	0.7	5.2
40	106.4	0.4	1.3	74.7	0.5	1.7	55.2	0.5	2.2	43.3	0.5	2.7	34.0	0.6	3.2	29.0	0.6	3.6	24.1	0.6	4.1	20.3	0.6	4.7	17.2	0.7	5.2
45	119.7	0.4	1.3	84.1	0.5	1.7	62.1	0.5	2.2	48.8	0.5	2.7	38.3	0.6	3.2	32.6	0.6	3.6	27.2	0.6	4.1	22.8	0.6	4.7	19.4	0.7	5.2
50	133.0	0.4	1.3	93.4	0.5	1.7	69.0	0.5	2.2	54.2	0.5	2.7	42.5	0.6	3.2	36.2	0.6	3.6	30.2	0.6	4.1	25.4	0.6	4.7	21.5	0.7	5.2
55	146.3	0.4	1.3	102.8	0.5	1.7	75.9	0.5	2.2	59.6	0.5	2.7	46.8	0.6	3.2	39.8	0.6	3.6	33.2	0.6	4.1	27.9	0.6	4.7	23.7	0.7	5.2
60	159.6	0.4	1.3	112.1	0.5	1.7	82.8	0.5	2.2	65.0	0.5	2.7	51.0	0.6	3.2	43.4	0.6	3.6	36.2	0.6	4.1	30.5	0.6	4.7	25.9	0.7	5.2
65	172.9	0.4	1.3	121.4	0.5	1.7	89.7	0.5	2.2	70.4	0.5	2.7	55.3	0.6	3.2	47.1	0.6	3.6	39.2	0.6	4.1	33.0	0.6	4.7	28.0	0.7	5.2
70	186.2	0.4	1.3	130.8	0.5	1.7	96.6	0.5	2.2	75.8	0.5	2.7	59.5	0.6	3.2	50.7	0.6	3.6	42.2	0.6	4.1	35.5	0.6	4.7	30.2	0.7	5.2
75	199.5	0.4	1.3	140.1	0.5	1.7	103.5	0.5	2.2	81.2	0.5	2.7	63.8	0.6	3.2	54.3	0.6	3.6	45.2	0.6	4.1	38.1	0.6	4.7	32.3	0.7	5.2
80	212.8	0.4	1.3	149.5	0.5	1.7	110.5	0.5	2.2	86.7	0.5	2.7	68.0	0.6	3.2	57.9	0.6	3.6	48.3	0.6	4.1	40.6	0.6	4.7	34.5	0.7	5.2
85	226.1	0.4	1.3	158.8	0.5	1.7	117.4	0.5	2.2	92.1	0.5	2.7	72.3	0.6	3.2	61.5	0.6	3.6	51.3	0.6	4.1	43.1	0.6	4.7	36.6	0.7	5.2
90	239.4	0.4	1.3	168.1	0.5	1.7	124.3	0.5	2.2	97.5	0.5	2.7	76.5	0.6	3.2	65.2	0.6	3.6	54.3	0.6	4.1	45.7	0.6	4.7	38.8	0.7	5.2
95	252.7	0.4	1.3	177.5	0.5	1.7	131.2	0.5	2.2	102.9	0.5	2.7	80.8	0.6	3.2	68.8	0.6	3.6	57.3	0.6	4.1	48.2	0.6	4.7	40.9	0.7	5.2
100	266.0	0.4	1.3	186.8	0.5	1.7	138.1	0.5	2.2	108.3	0.5	2.7	85.0	0.6	3.2	72.4	0.6	3.6	60.3	0.6	4.1	50.7	0.6	4.7	43.1	0.7	5.2
105	279.3	0.4	1.3	196.2	0.5	1.7	145.0	0.5	2.2	113.7	0.5	2.7	89.3	0.6	3.2	76.0	0.6	3.6	63.3	0.6	4.1	53.3	0.6	4.7	45.2	0.7	5.2
110	292.6	0.4	1.3	205.5	0.5	1.7	151.9	0.5	2.2	119.2	0.5	2.7	93.5	0.6	3.2	79.6	0.6	3.6	66.4	0.6	4.1	55.8	0.6	4.7	47.4	0.7	5.2
115	305.9	0.4	1.3	214.9	0.5	1.7	158.8	0.5	2.2	124.6	0.5	2.7	97.8	0.6	3.2	83.3	0.6	3.6	69.4	0.6	4.1	58.3	0.6	4.7	49.5	0.7	5.3
120	319.2	0.4	1.3	224.2	0.5	1.7	165.7	0.5	2.2	130.0	0.5	2.7	102.0	0.6	3.2	86.9	0.6	3.6	72.4	0.6	4.1	60.9	0.6	4.7	51.7	0.7	5.3
125	332.5	0.4	1.3	233.5	0.5	1.7	172.6	0.5	2.2	135.4	0.5	2.7	106.3	0.6	3.2	90.5	0.6	3.6	75.4	0.6	4.1	63.4	0.6	4.7	53.8	0.7	5.3
130	345.8	0.4	1.3	242.9	0.5	1.7	179.5	0.5	2.2	140.8	0.5	2.7	110.5	0.6	3.2	94.1	0.6	3.6	78.4	0.6	4.1	66.0	0.6	4.7	56.0	0.7	5.3
135	359.1	0.4	1.3	252.2	0.5	1.7	186.4	0.5	2.2	146.2	0.5	2.7	114.8	0.6	3.2	97.7	0.6	3.6	81.4	0.6	4.1	68.5	0.6	4.7	58.1	0.7	5.3
140	372.4	0.4	1.3	261.6	0.5	1.7	193.3	0.5	2.2	151.7	0.5	2.7	119.0	0.6	3.2	101.3	0.6	3.6	84.4	0.6	4.1	71.0	0.6	4.7	60.3	0.7	5.3
145	385.7	0.4	1.3	270.9	0.5	1.7	200.2	0.5	2.2	157.1	0.5	2.7	123.3	0.6	3.2	105.0	0.6	3.6	87.5	0.6	4.1	73.6	0.6	4.7	62.5	0.7	5.3
150	399.0	0.4	1.3	280.2	0.5	1.7	207.1	0.5	2.2	162.5	0.5	2.7	127.5	0.6	3.2	108.6	0.6	3.6	90.5	0.6	4.1	76.1	0.6	4.7	64.6	0.7	5.3

RETARDANCE "D" AND "C"

NOTE: Width and Depth dimensions are in feet; Velocity measurements are in feet per second;
Depth "D" does not include allowance for freeboard or settlement.

This Page Intentionally Left Blank

H. Sediment Barrier (SB)

Sediment Barrier (SB)

Practice Description

A sediment barrier is a temporary structure used across a landscape mostly on the contour to reduce the quantity of sediment that is moving downslope. The most commonly used barrier is a silt fence (a geotextile fabric which is trenched into the ground and attached to supporting posts and possibly wire fence. Other barrier materials could include sand bags, wattles, and various man-made materials and devices that can be used in a similar manner as a silt fence.

This practice applies where sheet and rill erosion occurs on small disturbed areas. Barriers intercept runoff from upslope to form ponds that temporarily store runoff and allow sediment to settle out of the water and stay on the construction site.

Planning Considerations

Sediment barriers may be used on developing sites. It is most important that they be installed on the contour so that flow will not concentrate and cause bypassing by runoff going around the end of the barrier or overtopping because of lack of storage capacity.

The most commonly used sediment barriers are silt fences, and manufactured sediment logs (often referred to as wattles or sediment retention fiber roll). Manufactured sediment logs should be installed according to manufacturer's recommendations.

The success of silt fences depends on a proper installation (on the contour with each end turned up slope) that causes the fence to develop maximum efficiency

of sediment trapping. Silt fences should be carefully installed to meet the intended purpose.

A silt fence is specifically designed to retain sediment transported by sheet flow from disturbed areas, while allowing water to pass through the fence. Silt fences should be installed to be stable under the flows expected from the site. Silt fences should not be installed across streams, ditches, waterways, or other concentrated flow areas.

Silt fences are composed of geotextile supported between steel or wooden posts. Silt fences are commercially available with geotextile attached to the post and can be rolled out and installed by driving the post into the ground. This type of silt fence is simple to install, but more expensive than some other installations. Silt fences must be trenched in at the bottom to prevent runoff from undermining the fence and developing rills under the fence. Locations with high runoff flows or velocities should use wire fence reinforcement.

A rather recent innovation that somewhat resembles a double silt fence and referred to as a "sediment retention barrier with flocculant" is used to reduce turbidity in the runoff that will reach sensitive sites. The measure consists of a double row of netting or high flow silt fences installed parallel with loose straw, woodchips or other organic fill spread between the rows and straw or other organic material laid on the ground adjacent to the downslope row (see following picture). An approved flocculant powder is added to the material between the rows and to the organic material below the downslope row prior to runoff events. The measure is located upstream of a filter strip or buffer zone and is installed on the contour. Design professionals should get details needed to design this measure from a qualified industry representative.

Sediment retention barriers may be used as a "last line of defense" against sediment leaving the construction site in sensitive areas. Do not use it in lieu of adequate erosion and sediment control practices.

Design Criteria (only for silt fence)

Silt fence installations are normally limited to situations in which only sheet or overland flow is expected because the practice cannot pass the volumes of water generated by channel flows. Silt fences are normally constructed of synthetic fabric (geotextile) and the life is expected to be the duration of most construction projects. Silt fence fabric should conform to the requirements of geotextile meeting the requirements found in ASSHTO M288.

The drainage area behind the silt fence should not exceed ¼ acre per 100 linear feet of silt fence for non-reinforced fence and ½ acre per 100 feet of wire reinforced fence. When all runoff from the drainage area is to be stored behind the fence (i.e. there is no stormwater disposal system in place) the maximum slope length behind the fence should not exceed those shown in Table SB-1.

Table SB-1 Slope Limitations for Silt Fence

Land Slope (Percent)	Maximum Slope Length Above Fence (Feet)
<2	100
2 to 5	75
5 to 10	50
10 to 20*	25
>20	15

*In areas where the slope is greater than 10%, a flat area length of 10 feet between the toe of the slope to the fence should be provided.

Type A Silt Fence

Type A fence is at least 32” above ground with wire reinforcements and is used on sites needing the highest degree of protection by a silt fence. The wire reinforcement is necessary because this type of silt fence is used for the highest flow situations and has almost 3 times the flow rate as Type B silt fence. Type A silt fence should be used where runoff flows or velocities are particularly high or where slopes exceed a vertical height of 10 feet. Staked tie backs on each end of a Type A silt fence may be necessary to prevent overturning.

Provide a riprap splash pad or other outlet protection device for any point where flow may overtop the sediment fence.

The silt fence should be installed as shown in Figure SB-1. Materials for posts and fasteners are shown in Tables SB-2 and SB-3. Details for overlap of Type A silt fence is available from The Alabama Department of Transportation construction drawings.

Table SB-2 Post Size for Silt Fence

	Minimum Length	Type of Post	Size of Post
Type A	5’	Steel “T” Post	1.3lb./ft. min.
Type B	4’	Soft Wood Oak Steel	3” diameter or 2X4 1.5” X 1.5” 1.3lb./ft. min.
Type C	3’	Soft Wood Oak Steel	2” diameter or 2X2 1” X 1” .75lb./ft. min.

Table SB-3 Wood Post Fasteners for Silt Fence

	Gauge	Crown	Legs	Staples/Post
Wire Staples	17 min.	¾” wide	½” long	5 min.
	Gauge	Length	Button Heads	Nail/Post
Nails	14 min.	1”	¾” long	4 min.

Type B Silt Fence

This 36” wide filter fabric should be used on developments where the life of the project is greater than or equal to 6 months.

The silt fence should be installed as shown in Figure SB-2. Materials for posts and fasteners are shown in Tables SB-2 and SB-3. Details for overlap of the silt fence and fastener placement are shown in Figure SB-4.

Type C Silt Fence

Though only 22” wide, this filter fabric allows the same flow rate as Type B silt fence. Type C silt fence should be limited to use on relatively minor projects, such as residential home sites or small commercial developments where permanent stabilization will be achieved in less than 6 months.

The silt fence should be installed as shown in Figure SB-3. Materials for posts and fasteners are shown in Tables SB-2 and SB-3. Details for overlap of the silt fence and fastener placement are shown in Figure SB-4.

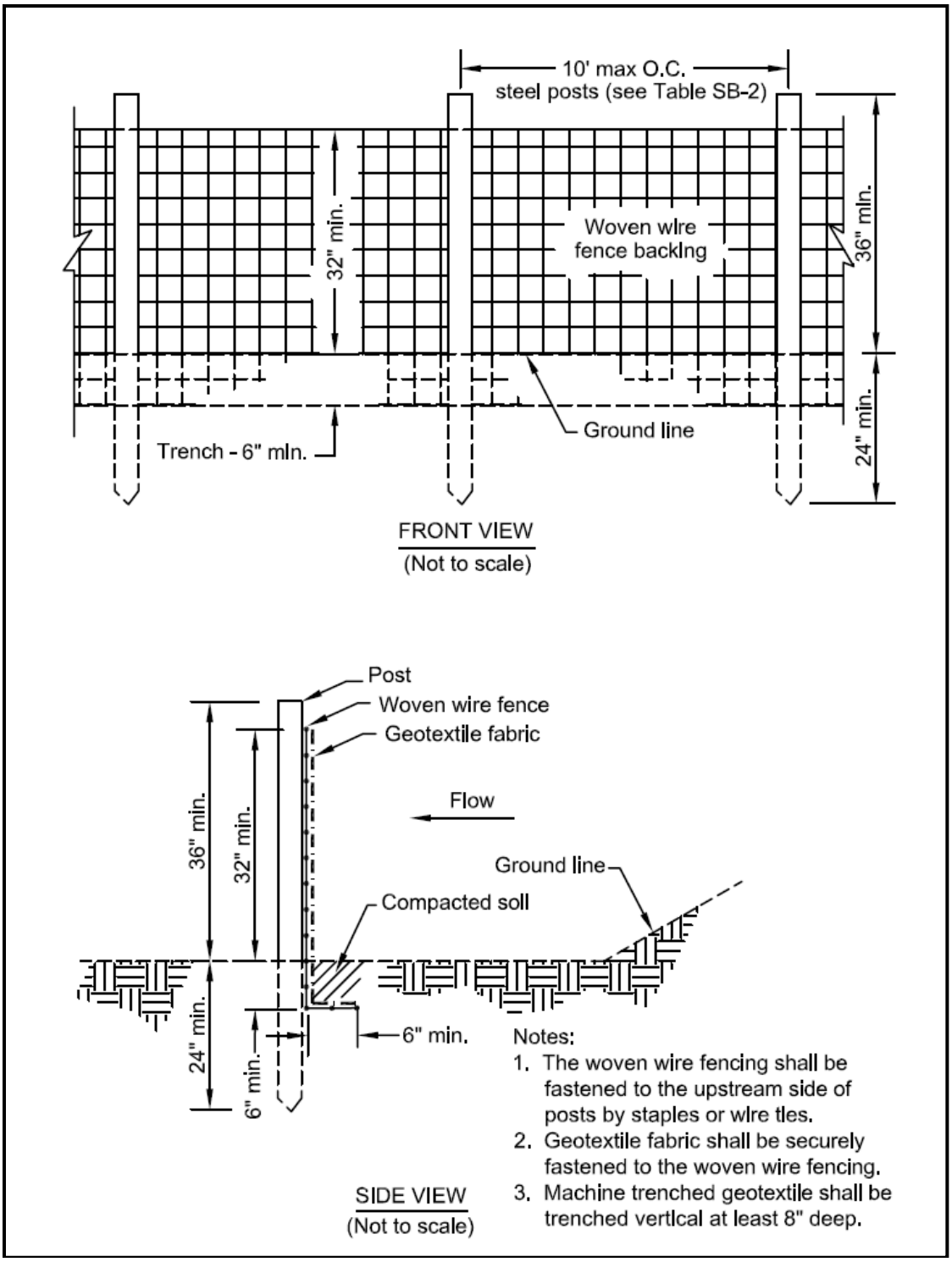

Figure SB-1 Silt Fence-Type A
(For post material requirements see Tables SB-2 and SB-3)

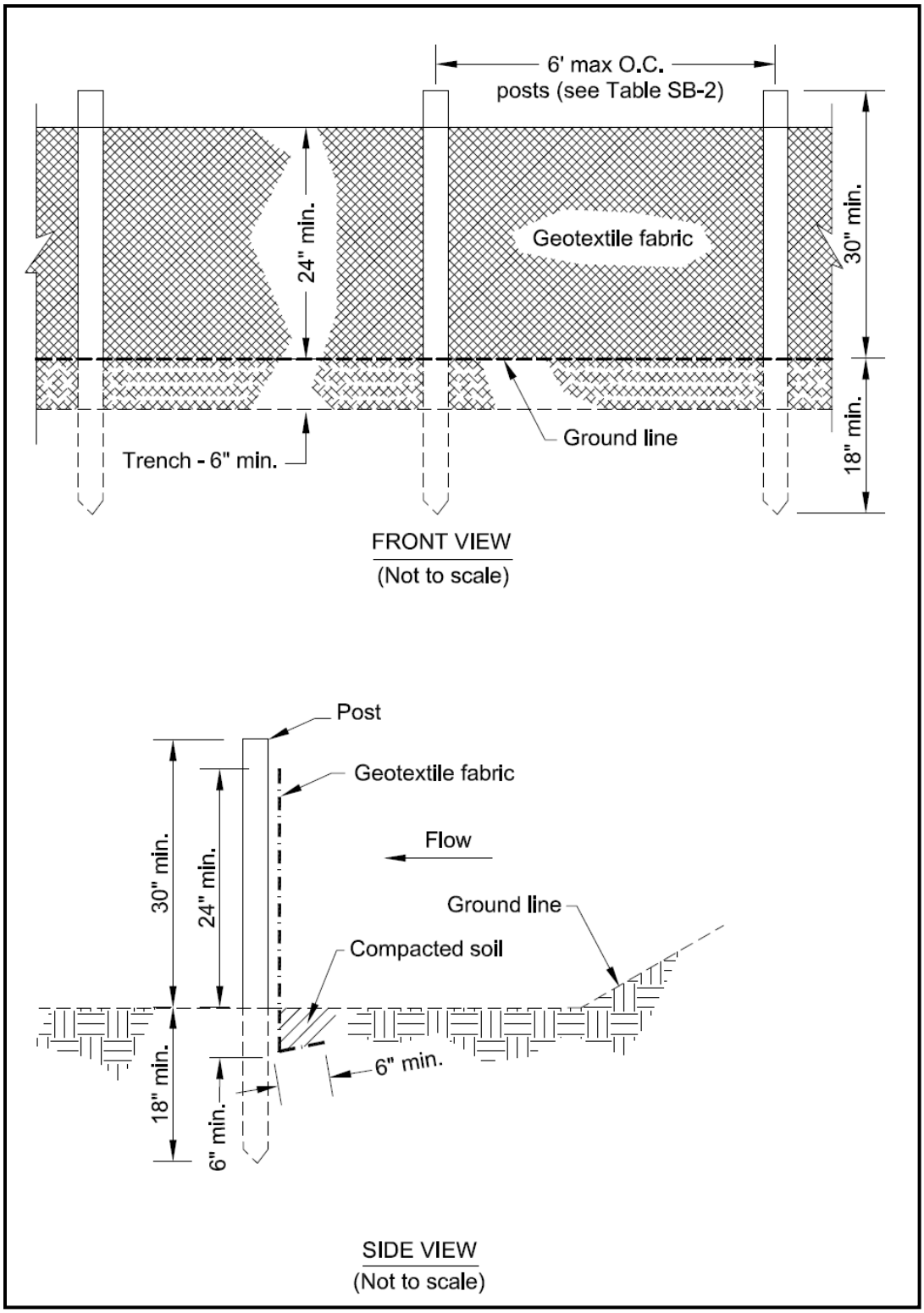

Figure SB-2 Silt Fence - Type B

(1) For post material requirements see Tables SB-2 and SB-3

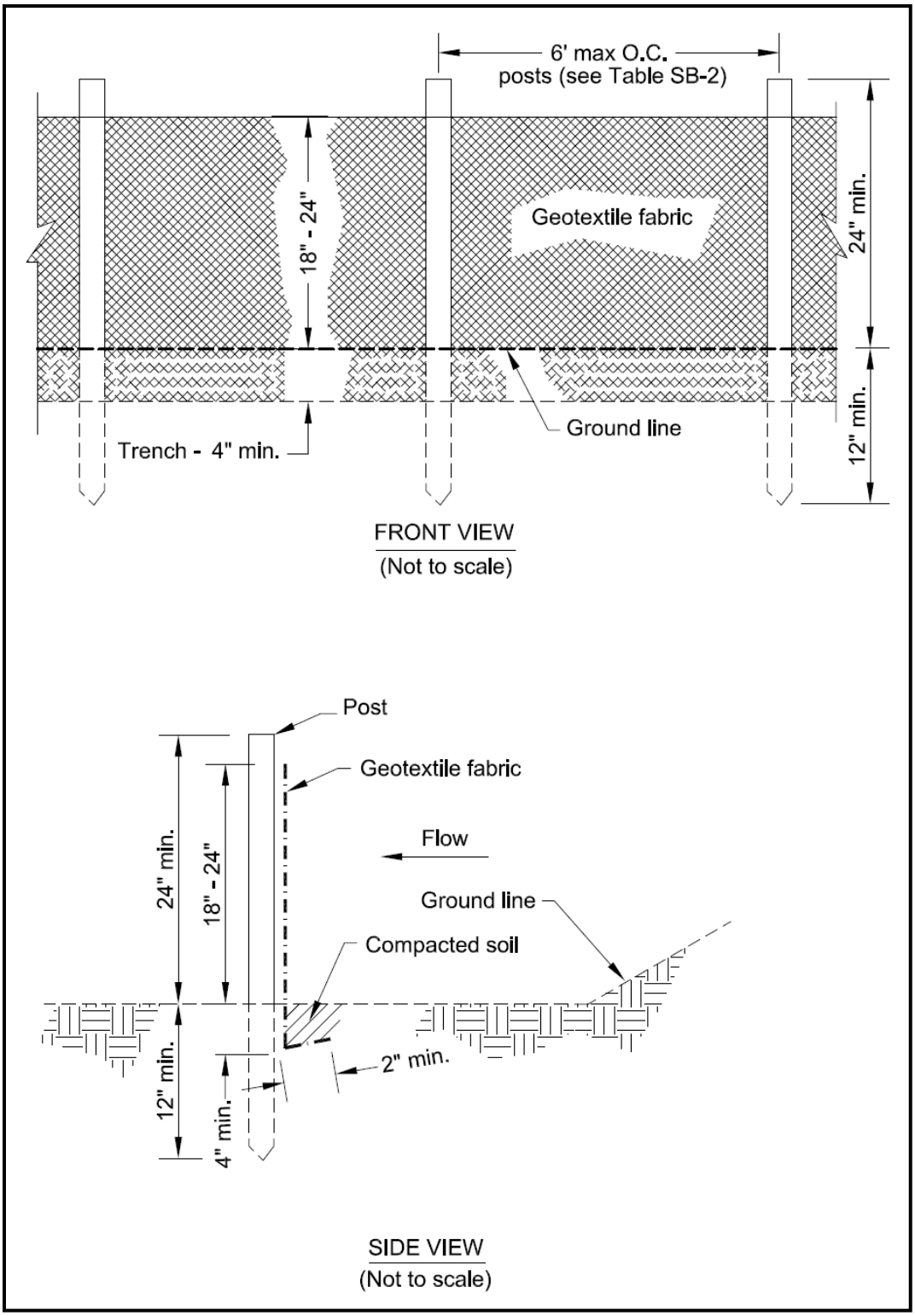

Figure SB-3 Silt Fence – Type C

(1) For post material requirements see Tables SB-2 and SB-3

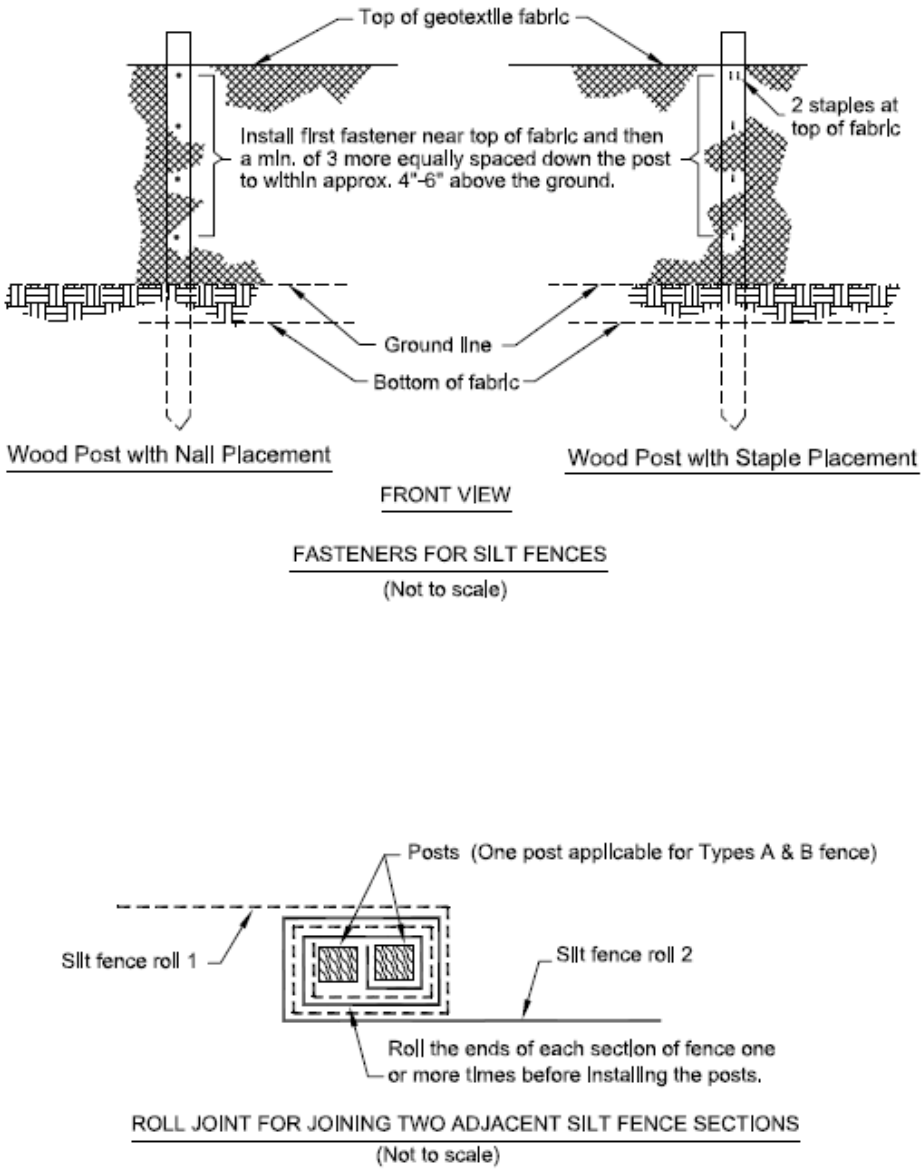

Figure SB-4 Silt Fence Installation Details

DEPARTMENT OF THE ARMY
US ARMY INSTALLATION MANAGEMENT COMMAND
HEADQUARTERS, UNITED STATES ARMY GARRISON, REDSTONE
4488 MARTIN ROAD
REDSTONE ARSENAL, ALABAMA 35898-5000

Received
APR 29 2016
Land Division

REPLY TO
ATTENTION OF

APR 26 2016

Environmental Management Division

Mr. Phillip D. Davis
Chief, Land Division
Alabama Department of Environmental Management
Post Office Box 301463
Montgomery, AL 36130-1463

Dear Mr. Davis:

References:

a. Installation Restoration Program at Redstone Arsenal, Alabama (EPA ID AL7 210 020 742).

b. Resource Conservation and Recovery Act Corrective Action Program at Redstone Arsenal, Alabama (EPA ID AL7 210 020 742)

c. Redstone Arsenal's Alabama Hazardous Wastes Management and Minimization Act Hazardous Waste Storage Facility/Thermal Treatment/Solid Waste Management Unit Corrective Action Permit, dated September 30, 2010, modification #6, dated July 6, 2015.

This letter transmits the submittal of the Corrective Measures Implementation Work Plan for MSFC-027, Inactive Waste Accumulation Area, Operable Unit 18, US Army Garrison-Redstone, Madison County, Alabama for your review.

Copies of this correspondence are being furnished to Mr. Philip Stroud, Alabama Department of Environmental Management; Mr. Alan Farmer, Resource Conservation and Recovery Act Division; Ms. Michelle Thornton, US Environmental Protection Agency, Region 4; Mr. Jeffrey L. Davis, US Army Environmental Command; Mr. John Guarisco, Alabama Department of Public Health; Ms. Samantha J. Strickland, Environmental Permits and Compliance; Mr. Dwight Cooley, Wheeler National Wildlife Refuge and Mr. Brian Roberson, Marshall Space Flight Center.

My point of contact for this matter is Ms. Terry de la Paz, Environmental Management Division, 256-955-6968 or e-mail terry.m.delapaz.civ@mail.mil.

Sincerely,

Terry W. Hazle
Chief, Environmental Management
Division

Enclosure

DEPARTMENT OF THE ARMY
US ARMY INSTALLATION MANAGEMENT COMMAND
HEADQUARTERS, UNITED STATES ARMY GARRISON, REDSTONE
4488 MARTIN ROAD
REDSTONE ARSENAL, ALABAMA 35898-5000

REPLY TO
ATTENTION OF

APR 2 6 2016

Environmental Management Division

Mr. Phillip D. Davis
Chief, Land Division
Alabama Department of Environmental Management
Post Office Box 301463
Montgomery, AL 36130-1463

Dear Mr. Davis:

References:

a. Installation Restoration Program at Redstone Arsenal, Alabama (EPA ID AL7 210 020 742).

b. Resource Conservation and Recovery Act Corrective Action Program at Redstone Arsenal, Alabama (EPA ID AL7 210 020 742)

c. Redstone Arsenal's Alabama Hazardous Wastes Management and Minimization Act Hazardous Waste Storage Facility/Thermal Treatment/Solid Waste Management Unit Corrective Action Permit, dated September 30, 2010, modification #6, dated July 6, 2015.

This letter transmits the submittal of the Corrective Measures Implementation Work Plan for MSFC-027, Inactive Waste Accumulation Area, Operable Unit 18, US Army Garrison-Redstone, Madison County, Alabama for your review.

Copies of this correspondence are being furnished to Mr. Philip Stroud, Alabama Department of Environmental Management; Mr. Alan Farmer, Resource Conservation and Recovery Act Division; Ms. Michelle Thornton, US Environmental Protection Agency, Region 4; Mr. Jeffrey L. Davis, US Army Environmental Command; Mr. John Guarisco, Alabama Department of Public Health; Ms. Samantha J. Strickland, Environmental Permits and Compliance; Mr. Dwight Cooley, Wheeler National Wildlife Refuge and Mr. Brian Roberson, Marshall Space Flight Center.

My point of contact for this matter is Ms. Terry de la Paz, Environmental Management Division, 256-955-6968 or e-mail terry.m.delapaz.civ@mail.mil.

Sincerely,

Terry W. Hazle
Chief, Environmental Management
Division

Enclosure

Corrective Measures Implementation Work Plan
MSFC-027, Inactive Waste Accumulation Area
Operable Unit 18
U.S. Army Garrison-Redstone
Madison County, Alabama
EPA ID No. AL7 210 020 742

Prepared for:

Mission & Installation Contracting Command
ATTN: MICC Center – FSH
2107 17th Street
Building 4197, Suite 15
Fort Sam Houston, Texas 78234-5015

Prepared by:

CB&I Federal Services LLC
2410 Cherahala Boulevard
Knoxville, Tennessee 37932

Task Order 0014
Contract No. W91ZLK-09-D-0006
CB&I Federal Services LLC
Project No. 500382

April 2016

Corrective Measures Implementation Work Plan
MSFC-027, Inactive Waste Accumulation Area
Operable Unit 18

U.S. Army Garrison-Redstone
Madison County, Alabama
EPA ID No. AL7 210 020 742

Certification

I certify under penalty of law that this document and all attachments were prepared under my direction or supervision in accordance with a system designed to assure that qualified personnel properly gather and evaluate the information submitted. Based on my inquiry of the person or persons who manage the system, or those persons directly responsible for gathering the information, the information submitted is, to the best of my knowledge and belief, true, accurate, and complete. I am aware that there are significant penalties for submitting false information, including the possibility of fine and imprisonment for knowing violations.

Kenneth J. Hurley

Kenneth J. Hurley
Alabama PE No. 25249

ALABAMA LICENSED No. 25249 PROFESSIONAL ENGINEER KENNETH JOHN HURLEY

4-21-2016
Date

Table of Contents

Page

List of Appendices iv
List of Tables v
List of Figures v
Executive Summary ES-1
1.0 Introduction 1-1
1.1 Purpose 1-1
1.2 MSFC-027 Overview 1-2
1.3 Document Organization 1-3
2.0 Investigation Results 2-1
2.1 Investigation History 2-1
2.2 Nature and Extent of Contamination 2-2
2.3 Fate and Transport Summary 2-3
2.4 Site Risk Summary 2-4
2.4.1 Land and Resource Use 2-4
2.4.2 Human Health ARBCA 2-5
2.5 Screening-Level Ecological Risk Assessment 2-8
2.6 Final Conceptual Site Model 2-9
2.7 Summary 2-10
3.0 Decision Summary 3-1
3.1 Basis for the Action 3-1
3.1.1 Objectives of the Corrective Measures 3-1
3.1.2 Cleanup Goals for the Corrective Measures 3-1
3.1.3 Scope and Role of Operable Unit or Response Action 3-2
3.1.3.1 Overall Remedial Strategy for Redstone Arsenal and MSFC-027 3-2
3.1.3.2 Scope of Problems Addressed by MSFC-027 Corrective Measures 3-4
3.2 Selected Corrective Measures 3-4
3.2.1 Soil Excavation and Off-Site Disposal 3-4
3.2.2 Summary of the Corrective Measure Alternatives Evaluation 3-4
3.3 Extent of Contaminated Soil 3-4
3.4 Request for Permit Modification 3-5
4.0 Corrective Measures Implementation 4-1
4.1 General Scope 4-1
4.1.1 Procurement and Subcontracting 4-2

Table of Contents *(Continued)*

Page

4.1.2 Field Personnel 4-3
4.2 Pre-Excavation Design Optimization Sampling 4-3
4.2.1 Former Soil Boring MSFC-027-SB022 4-4
4.2.2 Former Soil Boring MSFC-027-SB023 4-4
4.2.3 Former Soil Boring MSFC-027-SB024 4-5
4.2.4 Former Soil Boring MSFC-027-SB026 4-6
4.2.5 Former Soil Boring MSFC-027-SB028 4-7
4.3 Preliminary Activities 4-7
4.3.1 Mobilization 4-8
4.3.2 Access to Redstone Arsenal 4-8
4.3.3 Locating, Marking, and Surveying of Excavation 4-8
4.3.4 Digging Permit and Utility Markout 4-9
4.3.5 Site Control 4-9
4.3.6 Storm Water, Erosion, and Sediment Controls 4-9
4.3.7 Protection of Existing Monitoring Wells 4-10
4.3.8 Daily Reports 4-11
4.4 Soil Pile Removal/Soil Excavation Activities 4-11
4.5 Confirmation Sampling 4-13
4.6 Remediation-Derived Waste/Investigation-Derived Waste Management 4-15
4.7 Waste Characterization of Soil Piles/Excavated Soil Stockpiles 4-17
4.8 Waste Soil Transportation and Disposal 4-18
4.9 Post-Excavation Activities 4-18
4.9.1 Backfilling and Site Restoration 4-18
4.9.2 Equipment Decontamination 4-19
4.9.3 Temporary Storm Water, Erosion, and Sediment Control Removal 4-20
4.9.4 Demobilization 4-20
4.10 Inspections for Field Activities 4-20
4.11 Corrective Measures Implementation Reporting 4-21
5.0 Contingencies 5-1
5.1 Excavation of Arsenic in Deep Subsurface Soil 5-1
5.2 Excavation Beyond Proposed Boundaries 5-1
5.3 Discovery of Subsurface Contaminant Sources 5-2
5.4 Excavation Dewatering 5-2
5.5 Excavation of Unknown Utilities 5-2

Table of Contents *(Continued)*

Page

5.6 Saturated Soil Removal 5-3
5.7 Discovery of Munitions and Explosives of Concern/Chemical Warfare Materiel.....5-3
6.0 References 6-1

List of Appendices

Appendix	*Title*
A	Redstone RCRA Permit Modification Request
B	Corrective Measures Implementation Schedule
C	Site-Specific Safety and Health Plan
D	Construction Quality Assurance Plan
E	Data Collection Quality Assurance Plan
F	Best Management Practices for Storm Water Control

List of Tables

Table	Title	Follows Tab
2-1	Conclusions of the ARBCA RM-2 Evaluation	
3-1	Soil Cleanup Goals	
4-1	Excavation Areas and Volumes	

List of Figures

Figure	Title	Follows Tab
1-1	MSFC-027 Site Location Map	
1-2	MSFC-027 Soil Piles Site Map	
3-1	MSFC-027 Contaminants of Concern Exceeding Cleanup Goals	
4-1	MSFC-027 Proposed Excavation Areas	
4-2	MSFC-027 Pre-Excavation Design Optimization Sample Locations	
4-3	MSFC-027 Confirmation Sample Locations North Soil Piles	
4-4	MSFC-027 Confirmation Sample Locations South Soil Piles	

Executive Summary

CB&I Federal Services LLC, on behalf of the U.S. Army Garrison–Redstone, has prepared this corrective measures implementation work plan for Redstone Arsenal, Madison County, Alabama, under the management of the U.S. Army Environmental Command. The Mission & Installation Contracting Command has contracted CB&I Federal Services LLC under Contract Number W91ZLK-09-D-0006 to perform environmental remediation and restoration and program management services at Redstone Arsenal under the Resource Conservation and Recovery Act Corrective Action program in accordance with Redstone Arsenal's hazardous waste permit (U.S. Environmental Protection Agency ID #: AL7210020742). This corrective measures implementation work plan has been developed to provide technical guidance for implementing the corrective measures selected for MSFC-027, Inactive Waste Accumulation Area.

MSFC-027 occupies approximately 24 acres in the central portion of Redstone Arsenal, with 8 acres within the National Aeronautics and Space Administration George C. Marshall Space Flight Center boundary. The site lies above groundwater units RSA-148 and RSA-149, which cover approximately 3,561 and 3,915 acres, respectively, in the central portion of Redstone Arsenal.

The purpose of this corrective measures implementation work plan is to describe the corrective measures necessary to support no-further-action status and unrestricted use for the surface media at MSFC-027. The situation warranting action at MSFC-027 is contaminated soil in six soil piles containing arsenic, polychlorinated biphenyls, and pesticide residues. The soil may pose an unacceptable health risk to commercial/industrial or residential receptors. Constituents in surface soil associated with the identified soil piles also have the potential to pose a threat to ecological receptors. Any actions associated with groundwater beneath MSFC-027 will be addressed by the groundwater unit investigation being conducted by the National Aeronautics and Space Administration George C. Marshall Space Flight Center.

This work plan incorporates applicable elements of Alabama Department of Environmental Management Hazardous Waste Facility Permit No. AL7 210 020 742 and the most recent edition of the Alabama Environmental Investigation and Remediation Guidance. This work plan is submitted to fulfill in part the requirements listed in Section VI.E.1 of Redstone Arsenal's Resource Conservation and Recovery Act permit. As specified in Section VI.E.3 of that permit, a request for permit modification is included as part of this plan.

The MSFC-027 Resource Conservation and Recovery Act facility investigation defined the nature and extent of contamination, evaluated potential risks to current and future receptors, and concluded that corrective measures are required to attain site closure. The Alabama Risk-Based Corrective Action Risk Management 2 evaluation identified arsenic, polychlorinated biphenyls, and pesticides in soil as relevant chemicals of concern warranting action.

The Army has elected to perform corrective measures to remove and dispose of contaminated soils at MSFC-027 to address this problem. For administrative purposes, separate surface and groundwater units have been established for Redstone Arsenal for evaluation and cleanup under the Resource Conservation and Recovery Act process. Actions concerning groundwater at MSFC-027 will be addressed in the George C. Marshall Space Flight Center Operable Unit 3 groundwater unit investigation.

The cleanup goals for arsenic are based on the background screening values. Cleanup goals for the other contaminants of concern are set to achieve a cumulative cancer risk of 1E-05. The corrective measures objectives will be met when confirmation sampling results do not exceed the cleanup goals.

The corrective measures involve excavation and off-site disposal of contaminated soils at MSFC-027. Based on data from the Resource Conservation and Recovery Act facility investigation, approximately 25,500 square feet (approximately 5,000 loose cubic yards) of soil will be excavated, stockpiled, and characterized for waste disposal. Excavated soils will be stockpiled for disposal sampling and are expected to be transported and disposed at a Subtitle D landfill as nonhazardous waste.

This corrective measures implementation work plan presents the specific activities necessary to implement the corrective measures. These activities include procurement and subcontracting, mobilization, soil excavation, collection of confirmation and waste characterization samples, transportation and disposal of excavated material, and site restoration.

The following plans and supporting documentation are included as appendices to this corrective measures implementation work plan:

- Redstone Resource Conservation and Recovery Act Permit Modification Request
- Corrective Measures Implementation Schedule
- Site-Specific Safety and Health Plan
- Construction Quality Assurance Plan
- Data Collection Quality Assurance Plan
- Best Management Practices for Storm Water Control.

1.0 Introduction

CB&I Federal Services LLC (CB&I), on behalf of the U.S. Army Garrison–Redstone (hereinafter referred to as the Army), has prepared this corrective measures implementation (CMI) work plan for Redstone Arsenal (RSA), Madison County, Alabama, under the management of the U.S. Army Environmental Command. The Mission & Installation Contracting Command has contracted CB&I under Contract Number W91ZLK-09-D-0006 to perform environmental remediation and restoration and program management services at RSA under the Resource Conservation and Recovery Act (RCRA) Corrective Action Program in accordance with RSA's RCRA permit (last modified on July 6, 2015) (hereinafter referred to as the Permit) (U.S. Environmental Protection Agency [EPA] ID # AL7 210 020 742) (Alabama Department of Environmental Management [ADEM], 2015). This CMI work plan has been developed to provide technical guidance for implementing the corrective measures selected for site MSFC-027, Inactive Waste Accumulation Area, located within Operable Unit (OU) 18.

This CMI work plan incorporates applicable elements of the Permit and the most recent edition of the Alabama Environmental Investigation and Remediation Guidance (AEIRG) (ADEM, 2005). This CMI work plan is submitted to fulfill in part the requirements listed in Section VI.E.1 of the Permit. As specified in Section VI.E.3, a request for permit modification is included as part of this plan. This plan protects human health and the environment from hazardous constituents at concentrations exceeding applicable limits.

1.1 Purpose

The purpose of this CMI work plan is to describe the corrective measures planned to achieve unrestricted use of the MSFC-027 surface media site. The MSFC-027 RCRA facility investigation (RFI) (CB&I, 2014a) defined the nature and extent of contamination and evaluated potential risks to current and future receptors. The Alabama Risk-Based Corrective Action (ARBCA) Risk Management (RM) 2 evaluation identified arsenic, polychlorinated biphenyls (PCB) and pesticides in soil as relevant contaminants of concern (COC) warranting action because they pose an unacceptable health threat to hypothetical future residents. Corrective measures are therefore needed to address arsenic, PCBs, and pesticides in soil at MSFC-027 before the site can be released for unrestricted use.

Groundwater beneath MSFC-027 may pose an unacceptable risk to commercial/industrial or residential receptors from direct exposure to mercury, cis-1,2-dichloroethene (DCE), and trichloroethene (TCE) in groundwater if developed as a potable source. TCE and its breakdown products in groundwater appear to have originated from releases that occurred during

George C. Marshall Space Flight Center (MSFC) operations and are not addressed in this CMI work plan. Any action concerning groundwater beneath MSFC-027 will be addressed as part of the MSFC-027 OU-3 groundwater unit investigation.

The selected corrective measures address potential risks to current site workers and future residential receptors under an unrestricted use scenario by excavation and off-site disposal of arsenic-, PCB-, and pesticide-contaminated soils at MSFC-027. This CMI work plan presents the technical approach and rationale for conducting the field activities that will be performed during implementation of the selected remedy. Section 1.2 presents the site description and background, site setting, and environmental description for MSFC-027.

1.2 MSFC-027 Overview

MSFC-027 currently occupies approximately 24 acres in the central portion of RSA (Figure 1-1), with 8 acres within the National Aeronautics and Space Administration (NASA) MSFC boundary. The site lies above the RSA-148 and RSA-149 groundwater units. When initially designated as the M-1 Waste Accumulation Area, the site occupied approximately 4 acres surrounded by a chain-link fence and paved with gravel and asphalt (A. T. Kearney, Inc., 1989; Geraghty & Miller, Inc. [G&M], 1991) (Figure 1-2).

The site contains buildings, open storage areas, paved asphalt roadways, wooded areas, and maintained grass. Originally, this area was utilized for bulk aboveground storage of fuel oil and ethanol, supporting the production of ethylene gas in the manufacturing of the chemical agent (CA) mustard in 1943. These storage tanks were removed between 1956 and 1959. In the late 1950s through the early 1960s, missile component testing was conducted in the eastern portion of the site by the Army. In July 1960, the Army granted use and occupancy to NASA MSFC. Two NASA responsible sites, including MSFC-081 (Paint Spray Booth) and MSFC-083 (Groundskeeper/Future Area Building 4348) are wholly (MSFC-081) or partially (MSFC-083) located within the MSFC-027 boundary. These sites are currently being investigated by NASA in compliance with the Comprehensive Environmental Response, Compensation, and Liability Act.

Waste accumulation and storage by the Army and NASA began between 1961 and 1964, based on aerial photographs (CB&I, 2014a) and documentation (A.T. Kearney, Inc., 1989; G&M, 1991). This section of the site was utilized as an accumulation area for wastes generated primarily by maintenance activities, including the storage of scrap metal, waste oils, solvents, sludge, and soil piles suspected to have been composed of sewage sludge. The soil associated with the soil piles was placed on the existing grade. Figure 1-2 shows the locations of the soil piles, labeled 1 through 6. The site was used as a waste accumulation area from the 1960s to 1987. ADEM inspected the site in July 1986 and noted no violations or hazardous waste

activities in the area. The site is no longer used for waste accumulation but remains active as an equipment and materials storage yard for MSFC.

The topography of the site is relatively flat, with the area to the west-northwest as the topographically high area, generally sloping to the east-southeast. An unnamed ephemeral storm water drainage feature (ditch) bisects the site, entering on the northern boundary and exiting the southern boundary.

Lithologic logs from soil and well borings at MSFC-027 indicate that native soils consist of predominantly medium- to high-plasticity clay, with trace to little amounts of silt and fine-grained sand. Based on auger refusal, thickness of the residual soils (overburden) ranges from approximately 21.5 (MSFC-027-SB024) to 51 (E27-RS853) feet. Chert and limestone fragments found in the clay matrix are residual from weathering of the cherty limestone bedrock. The amount of residual material increases with depth, and a zone containing abundant residual chert fragments is found just above bedrock.

Lithologic data from bedrock wells installed across this portion of RSA indicate that the shallow bedrock first encountered correlates with the middle to upper Tuscumbia Limestone and exhibits well-developed karst features. The Tuscumbia Limestone beneath this area is characterized by thinly bedded to massive, fine to medium crystalline, stylolitic limestone with numerous chert nodules and chert lenses.

The average depth to groundwater from overburden monitoring wells (E27-RS849, E27-RS851, E27-RS853, MC-MW04-006, and E-RS 1085) adjacent to the soil piles is 24 to 40 feet below ground surface (bgs). Depth to groundwater increases from south of the soil piles to north of the soil piles (i.e., 24 to 40 feet bgs) (CB&I, 2014a). Regional overburden groundwater has been recorded to flow generally to the south (Shaw Environmental, Inc. [Shaw], 2006); however, July 2011 site-specific elevation data and spring 2011 data (NASA, 2012) indicate a radial flow from E27-RS851 and MC-MW04-006, respectively, with a component to the west-northwest towards E27-RS1073, MC-MW04-007, and E27-RS850.

The MSFC-027 RFI Report (CB&I, 2014a) provides additional detail on the geology and hydrogeology at the site.

1.3 Document Organization

This CMI work plan is organized into the following chapters:

- ***Chapter 1.0, Introduction,*** presents the purpose and overview of the document and includes a brief site description, including the topography, geology, and hydrogeology associated with the site.

- ***Chapter 2.0, Investigation Results,*** presents additional background information about the project site, including investigation history, the nature and extent of contamination, a fate and transport summary, site risks, and the final site conceptual site model (CSM).

- ***Chapter 3.0, Decision Summary,*** describes the basis for the action, including the corrective measures objectives (CMO), the cleanup goals (CG), and a summary of the corrective measures.

- ***Chapter 4.0, Corrective Measures Implementation,*** describes the support and field activities necessary to implement the excavation and disposal of impacted soil media at the site.

- ***Chapter 5.0, Contingencies,*** describes the potential for variances which could arise during execution of the corrective measures described herein.

- ***Chapter 6.0, References,*** provides the references that contributed to the preparation of this CMI work plan.

The following plans and supporting documentation are included as appendices to this CMI work plan:

- Appendix A: Redstone RCRA Permit Modification Request
- Appendix B: CMI Schedule
- Appendix C: Site-Specific Safety and Health Plan
- Appendix D: Construction Quality Assurance Plan (CQAP)
- Appendix E: Data Collection Quality Assurance Plan (DCQAP)
- Appendix F: Best Management Practices (BMP) for Storm Water Control.

2.0 Investigation Results

This chapter presents additional background information about MSFC-027, including the investigation history, the nature and extent of contamination, a fate and transport summary, the site risks, and the final CSM.

2.1 Investigation History

Environmental investigations conducted at MSFC-027 include the following:

- MSFC-027 interim RCRA facility assessment (A.T. Kearney, Inc., 1989)
- MSFC-027 visual site inspection (VSI) (G&M, 1991)
- MSFC-027 site screening remedial investigation (Rust Environmental and Infrastructure, Inc., 1998)
- MSFC-027 interim report of findings (IT Corporation [IT], 1999a)
- MSFC-027 action memorandum (IT, 1999b)
- RCRA facility assessment (ADEM, 2008a)
- MSFC-027 RFI (Shaw, 2011, 2012,a,b; CB&I, 2014a).

The investigations and reports completed at the MSFC-027 soil piles include the MSFC-027 interim report of findings (IT, 1999a); MSFC-027 action memorandum (IT, 1999b); RSA RCRA facility assessment (ADEM, 2008a); and Phase I, II, and III of the RFI (CB&I, 2014a).
A summary of these investigations follows. The MSFC-027 RFI report (CB&I, 2014a) provides a summary of all of the investigations conducted at the site.

Recommendations from the 1998 investigation included removal of the soil piles and collection of samples from within the soil piles for additional characterization and determination of soil disposal options **(**IT, 1999a). A subsequent memorandum proposed collecting soil samples to further delineate the extent of contamination and removal of the soil piles (IT, 1999b). Analyses from subsequent sampling of the soil piles (surface and subsurface soil samples) were collected in year 2000 for characterization and waste disposal. The results indicated that contaminant concentrations were much lower than expected and concentrations were below the preliminary remediation goals developed for an industrial worker at the site. Therefore, the removal action was deemed unnecessary.

ADEM evaluated MSFC-027 during a 2008 VSI conducted as part of the RSA RCRA facility assessment (ADEM, 2008a). Findings of the assessment indicated that based on previous investigations, the unit history, and the current findings of the VSI, the probability of releases from MSFC-027 to soils is high and the probability of releases to all other environmental pathways is low. It was recommended that the Army proceed with further investigation at MSFC-027.

The MSFC-027 RFI (CB&I, 2014a) was designed to collect and evaluate the data needed to characterize the nature and extent of contaminant releases identified during previous investigations. The first phase of the RFI identified data gaps with respect to vertical and lateral delineation of pesticides, PCBs, and metals in soil associated with the previously identified soil piles. In May 2012, as part of the second phase of the RFI, soil sampling of the piles was conducted. The RFI concluded the piles contained arsenic, PCBs, and DDT (e.g. pesticide) residues and daughter products that may pose an unacceptable health risk to commercial/ industrial or residential receptors from exposure to soils in the piles. The RFI also concluded that constituents in surface soil associated with the identified soil piles have the potential to pose a threat to ecological receptors. The RFI recommended preparing a corrective measures study for the soil piles.

2.2 Nature and Extent of Contamination

The MSFC-027 usable data set includes screening-level and definitive analytical results from the following:

- One hundred five definitive-level surface soil samples
- Two hundred sixty-five definitive-level subsurface soil samples
- Fourteen definitive-level groundwater samples
- Fifteen screening-level groundwater samples.

Soil and groundwater sample analyses included volatile organic compounds (VOC), semivolatile organic compounds (SVOC) (including low-level polynuclear aromatic hydrocarbons [PAH]), pesticides, PCBs, and metals. Perchlorate, although not included in the MSFC-027 CSM, was analyzed in selected groundwater samples as part of an installation-wide event.

The nature and extent of contamination at MSFC-027 has been defined and indicates the following:

- Four metals in surface soil (cadmium, copper, mercury, and silver) and two in subsurface soil (arsenic and cadmium) associated with on-site soil piles exceeded screening levels and were determined not to be related to naturally occurring background. All other detected metals in soil either did not exceed screening levels or

were determined to be naturally occurring based on the site-to-background evaluation. One detection of mercury in groundwater was determined to be anomalously high in the site-to-background evaluation.

- Perchlorate, although not included within the MSFC-027 CSM, was analyzed for in four monitoring wells as part of installation-wide groundwater assessments; concentrations did not exceed groundwater screening values.

- Four pesticides in surface soil (4,4'-DDD, 4,4'-DDE, and 4,4'-DDT), and one pesticide in subsurface soil (4,4'-DDE) exceeded screening levels. The elevated detections were associated with an identified soil pile located adjacent to the southeast corner of the gravel waste accumulation area. Concentrations of pesticides were not detected in groundwater.

- Two PCBs (Aroclor 1254 and Aroclor 1260) were detected at concentrations exceeding screening levels in soil, primarily associated with identified soil piles. PCBs were not detected in groundwater. Analysis for PCB congeners indicated that the potential for Aroclor analysis to misidentify or underestimate concentrations as a result of degradation and/or weathering is minor.

- VOCs were not detected at concentrations above their screening levels in soil. Concentrations of two VOCs were detected in 2011 groundwater samples at concentrations exceeding screening levels.

- SVOCs (predominantly PAHs) were detected in surface and subsurface soil: one PAH in surface soil and two in subsurface soil exceed residential preliminary screening values (PSV), but none were detected at concentrations that exceed their RSA-specific dilution-attenuation factor 4 soil screening levels (SSL). The extent of contamination for PAHs was determined in soil. Concentrations of four PAHs exceeded groundwater PSVs in one 2011 groundwater sample; however, these results were not confirmed in 2013 sampling.

2.3 Fate and Transport Summary

At MSFC-027, the major potential contaminant migration pathway was identified as leaching of site-related chemicals from soil to form leachate and the subsequent transport to the water table as a result of the downward percolation of infiltrating rainfall. Organic and inorganic chemicals present in soil may undergo dissolution by rainfall, partition into leachate, and be transported to groundwater via percolation and downward migration. Prior to reaching groundwater, contaminant concentrations are attenuated during transport by mechanical dispersion, degradation, and/or adsorption to soil particles.

Six detections of arsenic in subsurface soil from five locations associated with the soil piles were determined by the site-to-background evaluation to contain anomalously high arsenic concentrations (CB&I, 2014a). These anomalous detections are bounded by both shallower (including surface soil) and deeper intervals at each subject location by concentrations lower

than the screening values. The likely transport medium is infiltrating groundwater moving through the soil pile. Dissolved arsenic moving down into the soil column was likely immobilized (i.e., mineralized) when a subsurface interval exhibiting higher pH values and higher clay (iron) content caused the arsenic to become less soluble, thereby creating a zone of discrete anomalous concentrations. Arsenic was not detected in 11 groundwater samples collected from eight on-site wells in 2009 through 2011, indicating that soil concentrations do not pose a threat to groundwater from the soil-to-groundwater migration pathway.

2.4 Site Risk Summary

An ARBCA evaluation for human health and a screening-level ecological risk assessment (SLERA) were performed for MSFC-027 as part of the RFI (CB&I, 2014a). These evaluations are summarized in the following sections. The RFI report provides the complete ARBCA evaluation for human health and the SLERA (CB&I, 2014a).

2.4.1 Land and Resource Use

Land use across MSFC-027 is designated as “business” (industrial and/or administrative). The portion of MSFC-027 east of the drainage ditch measures approximately 16 acres and is occupied by buildings, parking and storage lots, and wooded areas. The inactive waste accumulation area (approximately 5.5 acres) is included in this 16-acre section. The western portion of the site (approximately 8 acres) is occupied by gravel/asphalt storage areas, buildings, and mowed grass areas. Although the use of MSFC-027 is not designated residential nor is it expected to be in the future, the ARBCA human health evaluation assesses risks from residential site use, which is helpful in determining whether there is a benefit to incrementally increasing the scope of remediation to include cleanup to residential standards to attain unrestricted land use.

Groundwater under RSA is not currently used for any potable uses. RSA’s installation-wide groundwater interim record of decision (Shaw, 2007) and land-use control (LUC) remedial design (Shaw, 2009) and the Army’s site access control program (Army, 2012) prevent the current use of groundwater for potable purposes and ensure that any nonpotable uses of groundwater are reviewed and evaluated by the Army prior to being permitted.

Through the provisions of the Army’s groundwater interim record of decision (Shaw, 2007) and the Army’s site access control program (Army, 2012), future groundwater resources beneath MSFC-027 or elsewhere on RSA may not be developed for potable purposes, and groundwater withdrawals for nonpotable uses must be managed until remedies are selected in the final records of decision for the various groundwater units within RSA. This ongoing monitoring will allow the Army and ADEM to assess the rate of long-term groundwater recovery and also to ensure protection for residents living outside of the boundaries of RSA (CB&I, 2015).

2.4.2 Human Health ARBCA

The human health risk assessment for MSFC-027 was prepared in accordance with the ARBCA guidance manual (Revision 2) (ADEM, 2008b) and consists of a three-tiered process. The first tier, the preliminary screening level (PSL) evaluation, consists of comparing maximum detected concentrations (MDC) of site-related chemicals of potential concern (COPC) with PSVs. The second tier of the ARBCA procedure is the Risk Management (RM) 1 evaluation, which provides models and default variable values to evaluate the chemicals in soil and groundwater with concentrations greater than residential PSVs in a cumulative risk assessment. In this case, the RM-1 evaluation was bypassed in favor of the RM-2 evaluation, the third tier of the ARBCA procedure. This evaluation allows site-specific alternative models and assumptions. The results of the PSL and RM-2 evaluations are described in this section.

The PSL evaluation consists of a simple comparison of site concentrations with PSVs, which generally are based on the EPA (2012) regional screening levels (RSL), modified if necessary to reflect an individual excess lifetime cancer risk (IELCR) of 1E-06 or a noncancer hazard index (HI) of 0.1. When modified RSLs are available for cancer risk and noncancer hazard for a given chemical, the smaller is chosen as the PSV. PSVs for soil are available for commercial exposure, residential exposure, and protection of groundwater. Residential PSVs were selected for the MSFC-027 evaluation in order to consider alternatives to attain unrestricted land use. The PSL evaluation is conducted for all chemicals that are determined to be site related (identified as COPCs). COPCs are identified by comparison of maximum concentrations to background screening values (BSV), and if needed, geochemical and statistical evaluation of site and background data. For MSFC-027, COPCs were identified separately for surface soil, shallow subsurface soil, and deeper subsurface soil. All chemicals identified as COPCs in any of the three soil sampling intervals were included as COPCs in total soil (a hypothetical medium including all soil depths to the shallower of bedrock or the water table). Groundwater was also evaluated as a potential source of potable water.

Concentrations of COPCs from two separate areas were compared to residential PSVs, the area of the soil piles, and remainder of the site. Groundwater MDCs were compared with tap water PSVs. A COC was identified if the MDC was greater than the PSV.

COCs for the direct exposure pathways identified in soils from the piles were five metals, PCBs in the form of two Aroclors (1254 and 1260), and four organochlorine pesticides (OP). Two Aroclors and eight OPs were identified as COCs for the consumption of homegrown produce pathway. COCs for the direct exposure pathways identified in soils from the remainder of the site were Aroclor 1260 and two PAHs (benzo[a]pyrene and dibenz[a,h]anthracene). Aroclor 1254, Aroclor 1260, and seven OPs were identified as COCs for the consumption of homegrown

produce pathway. Chemicals in groundwater identified as COCs because their MDCs exceed their PSVs were mercury and two VOCs: TCE and its degradation product cis-1,2-DCE. Barium and six additional VOCs were identified as COCs only because they have maximum contaminant levels. These COCs were taken to the third tier (RM-2) of the ARBCA assessment for further evaluation.

As noted previously, the PSVs used for soil and groundwater were EPA RSLs from May 2012. Updates to the RSLs occur twice per year. In order to confirm that the PSVs used in the ARBCA are still current, they were compared to the EPA RSLs for November 2013 (EPA, 2013). This comparison confirmed that the RSLs used in the RFI are still current and the COCs identified would not change.

The COCs identified in the PSL evaluation were brought forward for evaluation in the cumulative risk assessment or for evaluation for potential impact on groundwater quality. Receptor scenarios evaluated in the cumulative risk assessment included a commercial worker (analogous to the groundskeeper of the installation-wide work plan [Shaw, 2010a]), construction worker, and a hypothetical residential receptor. All receptors were evaluated for potential exposure to total soil in the soil piles area and the remainder of the site. The 95 percent upper confidence limit on the mean or the MDC, whichever was lower, was selected as the representative concentration (RC) for each soil depth interval. The higher RC estimated for a given COC in surface soil or shallow or deeper subsurface soil was selected as the RC in total soil for the RM-2 evaluation. Groundwater was evaluated as if it were developed as a source of potable water in the future. The MDC was used as the RC for groundwater.

The residential scenario was included in the ARBCA evaluation in order to determine if this site is eligible for no further action (NFA) in accordance with ADEM requirements. In the Permit, issued in accordance with the Alabama Hazardous Wastes Management and Minimization Act, ADEM has specified that investigations must comply with AEIRG and ARBCA guidance. Therefore, in order to determine if this site is eligible for NFA, risks to a residential site user were assessed.

The ARBCA guidance considers an IELCR of 1E-05 to be the target cumulative risk. The target noncancer hazard is an HI of 1.0. Estimated cumulative risks/hazards at or below these targets do not require additional action.

The cumulative IELCR and noncancer HI estimates for the soil pile areas and the remainder of the site are based on the contributions from all the COCs carried forward from the PSL evaluation. For soil exposure in soil pile areas, the cumulative IELCR estimated for the

commercial worker and the hypothetical resident are greater than the ADEM limit. In addition, the cumulative HI for the hypothetical resident is greater than the ADEM limit. When exposure to groundwater is included in the estimates, the cumulative IELCR exceeds the ADEM cumulative risk trigger level of 1E-05 for the commercial worker and the hypothetical resident. The cumulative HI exceeded the threshold level of 1.0 for all receptors.

For soil exposure in the remainder of the site, neither the cumulative IELCR nor the HI are above ADEM limits for any receptor. When exposure to groundwater is included in the estimates, the cumulative HI estimates are above ADEM limits for all receptors and the cumulative IELCRs are above ADEM limits for the commercial worker and the hypothetical resident.

Table 2-1 is a summary of the RM-2 evaluation of human health that identifies COCs that contribute significantly to cumulative risk (IELCR of 1E-06 or greater) or hazard (HI of 0.1 or greater).

Exposure pathways that are not included in the PSL evaluation must be addressed at the RM-1 or RM-2 tier. Indoor inhalation exposure to vapors that enter via intrusion through cracks in a building foundation or slab is a plausible exposure pathway that was not evaluated in the PSL evaluation or the cumulative risk evaluation described previously.

A draft screening-level vapor intrusion evaluation of nine other surface media sites within groundwater unit RSA-146 was performed by Shaw (2010b). Data from 64 soil gas samples from 44 sample locations were assessed in the EPA (2002) three-tiered screening-level vapor intrusion evaluation. Based on this evaluation, it was concluded that the concentrations of VOCs in soil and groundwater in these nine surface media sites would pose no unacceptable risk via vapor intrusion.

In the RFI (CB&I, 2014a), maximum chemical concentrations in soil and groundwater at MSFC-027 were compared with those in the nine other RSA-146 surface media sites as an indication of the potential impact on indoor air quality. VOC concentrations in groundwater were also compared with EPA (2002) screening levels associated with an IELCR of 1E-06 or an HI of 1.0. It was concluded that VOCs in soil do not represent a source that would pose an unacceptable health threat by the vapor intrusion pathway.

VOCs detected in groundwater did not exceed their target screening concentrations, with the exception of cis-1,2-DCE and TCE, which were subjected to EPA (2002) Tier 3 modeling of indoor air concentrations. The estimated potential indoor air concentration of cis-1,2-DCE did not exceed the target screening levels based on a hazard quotient of 1.0. It was concluded that cis-1,2-DCE does not pose an unacceptable health threat by the vapor intrusion pathway.

The estimated potential indoor air concentration of TCE exceeded its target screening levels based on a cancer risk of 1E-05 and a hazard quotient of 1.0. The MDC of TCE in MSFC-027 groundwater, however, falls orders of magnitude below concentrations in groundwater at RSA-095 and RSA-096 within groundwater unit RSA-146, which were shown on the basis of measured soil gas concentrations not to pose an unacceptable health threat. Therefore, the RFI (CB&I, 2014a) concluded that VOCs released to MSFC-027 soil and groundwater do not pose an unacceptable health threat by the vapor intrusion pathway.

2.5 Screening-Level Ecological Risk Assessment

A SLERA was completed for MSFC-027 as part of the RFI (CB&I, 2014a). The surface soil data for MSFC-027 for both the soil piles areas and the remainder of the site were compared to their respective ecological screening values (ESV). Constituents detected in surface soil samples from the soil piles at MSFC-027 at concentrations above their ESVs included 14 metals (barium, cadmium, calcium, chromium, copper, lead, magnesium, manganese, mercury, selenium, silver, thallium, vanadium, and zinc), PCB congeners, DDT and metabolites, alpha-chlordane, beta-BHC, dieldrin, endosulfan II, endrin, endrin aldehyde, gamma-BHC, and gamma-chlordane. Constituents detected in surface soil samples from the remainder of the site at concentrations above their ESVs include 10 metals (barium, cadmium, calcium, chromium, cobalt, lead, manganese, mercury, selenium, and zinc), cyanide, Aroclor 1254, Aroclor 1260, and DDT and metabolites. These constituents were further evaluated in a chemical of potential ecological concern refinement process and community-level and food chain ecological assessments. All other constituents detected in surface soil at MSFC-027 were detected at concentrations less than their respective ESVs and/or BSVs and were considered to pose insignificant ecological hazards.

The community-level assessment of surface soil in the soil pile areas showed that mercury, selenium, DDT and metabolites, and zinc in surface soil at the MSFC-027 soil piles have the potential to pose ecological hazards to terrestrial invertebrate and/or plant communities. The potential effects of a number of chemicals of potential ecological concern could not be evaluated due to the lack of plant or terrestrial invertebrate screening values. The community-level assessment of surface soil in the remainder of the site showed that selenium has the potential to pose ecological hazards to terrestrial plant communities.

The food chain assessment of surface soil in the soil pile areas showed concentrations of PCB congeners and DDT and metabolites pose a potential hazard to ecological populations. The food chain assessment of surface soil in the remainder of the site showed that sensitive individuals may be adversely affected by selenium and zinc, but populations of food chain receptors are unlikely to be adversely affected.

Based on the results of the SLERA (CB&I, 2014a), it was concluded that constituents in surface soil at the MSFC-027 soil piles have the potential to pose hazards to ecological receptors. Constituents in surface soil at the remainder of MSFC-027 are unlikely to pose ecological hazards, with the possible exception of selenium, which may pose hazards to terrestrial plant communities. However, selenium's mean concentration is less than its BSV, indicating that concentrations of selenium across the site are similar to naturally occurring background levels.

2.6 Final Conceptual Site Model

A CSM was developed for MSFC-027 based on historical operations, available site information, and available soil and groundwater data. The most likely potential contaminants from the multiple uses which have occurred at MSFC-027 include VOCs, SVOCs, kerosene, unsymmetrical dimethyl hydrazine (UDMH), pesticides, PCBs, and metals. Primary potential release points and sources investigated at MSFC-027 include the following:

- Potential release of VOCs and SVOCs from the former aboveground storage tanks and related features (e.g., former fuel oil pump house) on site from 1943 through the late 1950s to impact surface and subsurface soil and groundwater.
- Activities associated with the former liquid oxygen fueling test stand (Building 353A/4350) in the extreme western portion of the site from the mid-1950s to the early 1960s included the following allowable materials: kerosene, alcohol/water, and liquid oxygen. Additionally, UDMH was documented to have been approved for use for fuel ignition, but with restrictions.
- Potential release of VOCs, SVOCs, metals, pesticides, and PCBs from waste accumulation activities (including soil piles) conducted from the early-mid-1960s to approximately 1987 to impact surface and subsurface soil and groundwater.
- Army activities associated with emplacing missiles on launchers and missile component testing in the eastern portion of the site; however, there is no record of solvent use or engine testing conducted in the area.

Constituents associated with NASA responsible sites MSFC-081 (active sandblasting and paint spray booth) and MSFC-083 (current groundskeeper and future area Building 4348) with the potential to impact surface and subsurface soil and groundwater include VOCs, SVOCs, and metals and VOCs, SVOCs, and pesticides, respectively. Contaminants associated with these sites, which are either wholly or partially within the MSFC-027 site boundary, will be addressed by NASA in accordance with the previously referenced November 1994 Memorandum of Agreement between the U.S. Army Missile Command and MSFC and Amendments 1 and 2, dated April 2002 and February 2005, respectively.

2.7 Summary

The nature and extent of contamination at MSFC-027 has been characterized. The site-related chemicals determined to be a COCs requiring an action to protect human health are arsenic, pesticides, and PCBs. Potential impacts from these chemicals in soil are also identified for ecological receptors.

Potential contamination in groundwater beneath MSFC-027 (including the saturated zone soils) has been characterized in the RFI report. Groundwater at MSFC-027 may pose an unacceptable health risk to commercial/industrial or residential receptors from direct exposure to mercury, cis-1,2-DCE, and TCE in groundwater developed as a potable source. TCE and its breakdown products in groundwater appear to have originated from releases that occurred during the operations of MSFC and are not addressed in this CMI plan. Any actions concerning groundwater beneath MSFC-027 will be addressed in the MSFC OU-3 groundwater unit investigation.

Thus, based on the results from the RFI report for MSFC-027, to achieve NFA status for surface media at MSFC-027, corrective measures are required to address arsenic, pesticides, and PCBs in soil. Any additional action concerning groundwater will be addressed as part of the MSFC OU-3 groundwater unit investigation.

3.0 Decision Summary

The RFI report for MSFC-027 concluded that the Army's historical operations at this site have resulted in releases to surface and subsurface media of hazardous substances that can pose an unacceptable threat to human health via direct exposure pathways. This chapter identifies the CMOs based on the results of the RFI, and provides CGs that can be used in evaluating alternatives that rely on reduction in concentrations to achieve the CMOs.

3.1 Basis for the Action

The RFI (CB&I, 2014a) defined the nature and extent of contamination, evaluated potential risks to current and future receptors, and concluded that action is required. In the ARBCA RM-2 evaluation of the soil pile areas, chemicals in soil were identified as relevant COCs warranting action. In addition, the SLERA concluded that constituents in surface soil at the MSFC-027 soil piles have the potential to pose hazards to ecological receptors. Corrective actions are therefore needed to address the soil pile areas of MSFC-027. For administrative purposes, separate surface and groundwater units have been established at RSA for evaluation and cleanup under the RCRA regulatory process. Any actions concerning groundwater beneath MSFC-027 will be addressed as part of the MSFC OU-3 groundwater unit investigation.

The Army intends to achieve closure for soils at MSFC-027 through the implementation of corrective measures, as they are needed to protect human health.

3.1.1 Objectives of the Corrective Measures

Based on the results of the RFI, the CMO for MSFC-027 is as follows:

- Reduce exposure of commercial workers and future residents to soil in the area of the soil piles contaminated with arsenic such that background conditions are achieved, and

- Reduce exposure of commercial workers and future residents to soil in the area of the soil piles contaminated with Aroclor 1260, 4,4'-DDT, 4,4'-DDE, and 4,4'-DDD such that the cumulative cancer risk associated with exposure to these chemicals is equal to or less than 1E-05.

It is presumed that achieving the above objective will also prevent any potential hazard to ecological receptors associated with exposure to surface soil in the area of the soil piles.

3.1.2 Cleanup Goals for the Corrective Measures

CGs are relevant to alternatives that reduce concentrations, such as excavation or treatment. The RFI (CB&I, 2014a) concluded that arsenic, Aroclor 1260, 4,4'-DDT, 4,4'-DDE, and 4,4'-DDD

in the soil piles areas of MSFC-027 significantly contribute to an unacceptable risk to commercial workers and future residential receptors. The RFI (CB&I, 2014a) also determined that Aroclor 1254 contributed to the noncancer hazard associated with the soil piles. A CG is not developed for Aroclor 1254 because it contributed to the target organ HI for skin effects, which was greater than 1 due to the presence of arsenic. Since the CMO for arsenic is based on background, the noncancer hazard associated with Aroclor 1254 does not warrant action. The RFI also concluded that the 2,3,7,8- tetrachlorodibenzo-p-dioxin (TCDD)-toxic equivalency quotient (TEQ) estimated for the individual PCB congeners contributed to an unacceptable risk to commercial workers and hypothetical residents. However, the PCB congener analysis was conducted for a limited number of samples in order to determine if Aroclor analysis for PCBs was adequate. The RFI (CB&I, 2014a) concluded that the potential for the Aroclor analysis to misidentify or underestimate concentrations as a result of weathering and degradation is minor. Therefore, a CG was developed for Aroclor 1260, but not for the TCDD-TEQ.

The cumulative cancer risk limit identified by ARBCA is 1E-05 (ADEM, 2008b). This limit is used as the basis for CGs with the exception of arsenic. The CGs for arsenic are based on the BSVs: 15 milligrams per kilogram (mg/kg) for surface soil and 18 mg/kg for subsurface soil. CGs for the remaining COCs are set to achieve a cumulative cancer risk of 1E-05, as shown in Table 3-1. The CGs were derived by using the information on RCs and estimated IELCR from Table D-27 of the RFI report (CB&I, 2014a). The soil concentrations were adjusted to achieve a cumulative risk of the COCs to a residential receptor of 1E-05. As shown in Table 3-1, the target risk selected for each COC was 2.5E-06.

The CMOs will be met when confirmation sampling results do not exceed the CGs (Table 3-1).

Figure 3-1 shows the locations where arsenic, Aroclor 1260, 4,4’-DDD, 4,4’-DDE, and 4,4’-DDT exceeded the CGs for surface and subsurface soil.

3.1.3 Scope and Role of Operable Unit or Response Action

This section includes the scope and role of the response action for MSFC-027, the scope of the problems addressed by the response action for MSFC-027, and a discussion of the relationship of the response action at the site to the response action at other operable units.

3.1.3.1 Overall Remedial Strategy for Redstone Arsenal and MSFC-027

The overall remedial strategy for RSA is discussed in this section. Soils at MSFC-027 were not found to pose a threat to groundwater from the soil-to-groundwater migration pathway. Exposure to groundwater beneath MSFC-027 would pose a threat to human health if it were used as a

potable source. The cleanup planned for MSFC-027 addresses risks from exposure to COCs in soil to site receptors through direct or indirect contact with soil only.

Overall, the environmental concerns at RSA are extremely complex. Work is underway at over 200 sites in the Installation Restoration Program at RSA. To ensure protection from exposure to potentially contaminated groundwater under these sites and elsewhere on RSA, an interim record of decision (IROD) has been approved for installation-wide groundwater LUCs (Shaw, 2007; 2009). This IROD covers the entire RSA site (fence to fence) with the exception of the NASA MSFC area. The groundwater under the MSFC portion of RSA is not part of the scope of the IROD. Although the groundwater underlying MSFC is technically inseparable from the rest of the RSA groundwater, NASA is developing a separate interim remedial action proposed plan and IROD to address similar risks from contaminated groundwater (i.e., OU-3) under its portion of RSA. Consequently, groundwater will not be addressed further in this plan.

The overall RSA cleanup strategy includes the following elements:

- Expedite evaluation and release of surface media sites to allow for efficient, mission-related property reuse.
- Expedite cleanup of source areas at surface media sites and secondary sources of ongoing groundwater contamination, including dense nonaqueous-phase liquid.
- Prevent exposures to surface media and groundwater that may result in unacceptable risks through the use of the Army's site access control program (Army, 2012).
- Coordinate the evaluation of groundwater units and their associated surface sites so that approval of groundwater RFIs is not delayed by unresolved surface media site issues.
- Design and implement an installation-wide monitoring network to monitor remedial progress and ensure that the selected remedies are protective of human health and the environment on a long-term basis.

The corrective measures for MSFC-027 are related to this strategy since the corrective measures will provide protection of human receptors and the environment from soils contaminated with arsenic, PCBs, and DDT and its metabolites. The corrective measures will also support the Army and the federal government overall in reducing future short-term and long-term financial liabilities associated with managing this site. In the short term, site-related costs for managing this site under RSA's site access control program will be reduced after the site is released for unrestricted use. The Army intends to clean up MSFC-027 such that NFA will be required for surface media at this site.

3.1.3.2 Scope of Problems Addressed by MSFC-027 Corrective Measures

The action or scope covered by the corrective measure at MSFC-027 surface media will address contamination in soil that poses direct contact risks to the commercial worker and hypothetical future residential receptors and will also address potential impacts to ecological receptors. The corrective measure conducted at MSFC-027 is intended by the Army to be the final action for surface media.

3.2 Selected Corrective Measures

3.2.1 Soil Excavation and Off-Site Disposal

The Army has selected a corrective measure consisting of excavation and off-site disposal of arsenic-, pesticide-, and PCB-contaminated soils for MSFC-027.

3.2.2 Summary of the Corrective Measure Alternatives Evaluation

The following information summarizes the evaluation of alternatives and the selection of the corrective measures for MSFC-027. The following alternatives were considered during this evaluation:

- No Action
- Excavation and Off-Site Disposal
- Closure In Place with Land-Use and Storm Water Controls.

The following corrective measures were selected based on the evaluation:

- Excavation and Off-Site Disposal.

Excavation and off-site disposal was selected for the following reasons:

- Full removal of soil contaminated with arsenic, Aroclor 1260, 4,4'-DDT, 4,4'-DDE, and 4,4'-DDD is likely with this alternative. Full removal has the potential for clean site closure with no future LUCs or long-term monitoring and maintenance, ultimately eliminating the Army's remaining financial liability associated with MSFC-027.

- The overall cost of excavation and off-site disposal is less than the overall cost of Alternative 3 (Closure In Place with Land-Use and Storm Water Controls).

3.3 Extent of Contaminated Soil

Surface and subsurface soil sampling during the RFI identified areas where arsenic, pesticides (4,4'-DDD, -DDE, and –DDT), or Aroclor 1260 exceeded the CGs. Figure 3-1 illustrates the locations where COCs exceeded the CGs. Based on the RFI data, approximately 25,000 square feet (approximately 4,000 bank cubic yards) of surface and subsurface soil from Soil Piles

1 through 6 will be excavated, stockpiled, and characterized for waste disposal. Chapter 4.0 provides details on the activities necessary to complete the excavation and off-site disposal.

3.4 Request for Permit Modification

Appendix A includes a copy of the ADEM approval letter for the RFI report. The request for permit modification accompanies this CMI work plan and presents the supporting information, including all procedures necessary to implement and monitor the final corrective measures for MSFC-027 in accordance with Alabama Administrative Code (AAC) R.335-14-8-.04 (2). The inclusion of this request for permit modification meets requirements specified in Section VI.E.3 of the Permit.

4.0 Corrective Measures Implementation

This chapter provides an overview of the field activities planned to complete corrective measures at MSFC-027. Work presented in this chapter will be completed in accordance with the procedures outlined in this CMI work plan and other approved documentation, as appropriate.

4.1 General Scope

The general scope of work for MSFC-027 activities is expected to include the following:

- Pre-excavation design optimization soil sampling
- Mobilization/demobilization
- Utility clearance and marking
- Protection of existing monitoring wells
- Construction of erosion controls
- Vegetation clearing and debris removal
- Surveying and marking of the proposed excavation areas
- Excavation of contaminated soil
- Confirmation sampling and analysis of the excavated area
- Waste characterization sampling
- Transport and disposal of soil piles and excavated contaminated soils as nonhazardous waste (Subtitle D landfill)
- Site restoration, including application of backfill and topsoil, and revegetation with approved grass mixtures.

The general schedule for implementation of corrective measures at MSFC-027 is provided in Appendix B. The schedule is approximate. The actual dates of implementation will depend on document review time, coordination with other sites, and field conditions encountered during the excavation and disposal activities. Proposed excavation areas are shown on Figure 4-1.

Communication and coordination during the CMI will follow the guidelines provided in the project management plan for Task Order 0008 (Shaw, 2012c) for the Army and its contractors, the installation-wide quality assurance program plan (Shaw, 2013a) for the Army and ADEM, and RSA's community involvement plan (CB&I, 2015) for the Army and the public. As per the

RCRA permitting process, public involvement will occur at least twice, including a public notice to be issued by the Army during the CMI work plan finalization process and in accordance with ADEM's permit modification notification.

4.1.1 Procurement and Subcontracting

The following subcontracted services and imported materials may be required for the completion of the project:

- Soil sampling utilizing direct-push technology
- Vegetation clearing
- Analytical laboratory
- Transportation and disposal of contaminated soil
- Surveying
- General fill
- Topsoil
- Aggregate (crusher-run, riprap, drainage stone)
- Erosion controls
- Seed, fertilizer, and mulch
- Heavy-duty plastic sheeting.

The following equipment may be utilized to complete field remediation activities by subcontractors:

- Direct-push drill rig
- Excavator/backhoe/front-end loader to remove soil piles
- Excavator/backhoe to excavate contaminated soil
- Front-end loader to consolidate soil and move fill material
- Wheel loader to manage waste and move import fill material
- Large-capacity water truck (or equivalent) for site dust control and hydration of import material for compaction, taking care not to oversaturate the ground
- Portable fuel tank (mounted on pickup truck).

Support equipment and materials will be procured through equipment and scientific supply vendors and shipped directly to the site. Support equipment includes portable storage, radios, relief stations, eyewash stations, sampling supplies and equipment, health and safety supplies and equipment (e.g., personal protective equipment, air monitoring equipment [e.g., dust monitor and photoionization detector]), and other miscellaneous supplies (e.g., wooden stakes, pin flags, and construction fencing materials).

The copiers and fax machine at Building 7471 will also be used to support the work at MSFC-027.

4.1.2 Field Personnel

The following field personnel will likely be utilized to complete field remediation activities:

- Personnel
- One site supervisor
- One site safety officer
- One field construction quality control system manager
- One or two equipment operators
- Two laborers.

The number and schedule of personnel will be adjusted during the project as required for completion.

4.2 Pre-Excavation Design Optimization Sampling

Pre-excavation soil sampling will be performed to enhance the design of the excavation limits/depths and to confirm previous sampling results at the following soil pile boring locations: MSFC-027-SB022 (16 to 18 feet bgs), -SB023 (16 to 18 feet bgs), -SB024 (6 to 8 feet bgs), -SB026 (10 to 12 and 16 to 18 feet bgs), and -SB028 (22 to 24 feet bgs). This is prudent since these deep soils appear to be localized spots of elevated arsenic concentrations in deep soil, while analytical results from less deep soils at these locations were either below the CG or determined by the geochemical evaluation to be naturally occurring. Arsenic concentrations in the upper 15 feet for all but one (MSFC-027-SB024) of these boring locations were below its CG (18 mg/kg) or determined by the geochemical evaluation to be naturally occurring (CB&I, 2014a). Consequently, the available data indicate the arsenic concentrations in the deep soil are not likely a result of a surface spill or release.

Prior to mobilization for excavation activities, soil sampling will be performed at five former boring locations to confirm results where arsenic was detected at concentrations greater than its CG of 18 mg/kg. Composite soil samples will be collected from the soil interval determined during the RFI (CB&I, 2014a) as having anomalous arsenic concentrations greater than the CG (18 mg/kg). In addition, four step-out sample locations 5 feet from the former boring will also be sampled. Soils from the step-out locations will be held for later analysis, contingent on analytical results from resampling the boring location that exceeded the CG for arsenic. Soil samples from step-out locations will be analyzed for target analyte list (TAL) metals only if the arsenic concentration found from resampling the former boring location is greater than the CG (18 mg/kg) and determined not to be naturally occurring.

The locations of the pre-excavation design optimization soil samples are shown on Figure 4-2. If the arsenic concentrations detected in pre-excavation samples are greater than the CG of 18 mg/kg and the arsenic concentrations are deemed to be anomalously high based on a geochemical evaluation, corrective measures will be required for deep soil at that location. Step-out confirmation samples will be analyzed if excavation of deep soil is deemed necessary (Figure 4-2). The step-out confirmation samples may also serve as sidewall confirmation samples if the arsenic result is below the CG or concentration is determined to be naturally occurring. Required excavation will be performed in accordance with the activities described in Section 4.4.

4.2.1 Former Soil Boring MSFC-027-SB022

Soils in former boring location MSFC-027-SB022 exceeded the CG for arsenic at the 16 to 18 feet bgs interval with a concentration of 73.6 mg/kg. The remaining sample intervals at this boring location contained arsenic concentrations less than the CG. A pre-excavation design optimization soil sample (SB022A) will be collected from the location of former boring MSFC-027-SB022. The sample (MSFC-027-SB022A) will be a composite soil sample collected from 16 to 18 feet bgs for analysis of TAL metals.

In addition, composite soil samples will be collected from 16 to 18 feet bgs from four step-out sample locations (contingency samples 22BW01 through 22BW04) (Figure 4-2). These step-outs will be located approximately 5 feet from pre-excavation sample location SB022A (at the location of former boring MSFC-027-SB022). Soils from the step out locations will be held for TAL metals analysis contingent on results of the analytical results from SB022A.

The step-out samples (contingency samples 22BW01 through 22BW04) will not be analyzed if the arsenic concentration detected in pre-excavation sample SB022A is below the CG of 18 mg/kg or the arsenic concentration is deemed to be natural occurring based on a site-to-background evaluation. No corrective measures will be required for deep subsurface soil at this location. However, the step-out samples will be analyzed for TAL metals if SB022A analytical results indicate arsenic contamination greater than the CG of 18 mg/kg. The step-out confirmation samples may also serve as sidewall confirmation samples if the arsenic result is below the CG or the arsenic concentrations is determined to be naturally occurring. Additional sampling may be required if arsenic concentrations in step-out locations exceed the CG of 18 mg/kg and are not naturally occurring.

4.2.2 Former Soil Boring MSFC-027-SB023

Soil from MSFC-027-SB023 exceeded the CG for arsenic at the 16 to 18 feet bgs interval with a concentration of 72.1 mg/kg. The remaining sample intervals at this boring location contained

arsenic concentrations less than the CG (18 mg/kg) except for the 22 to 24 feet bgs sample interval (19.4 mg/kg), which was determined by the geochemical evaluation to be naturally occurring (CB&I, 2014a). A pre-excavation soil sample will be collected (SB023A) from the location of former boring MSFC-027-SB023. The sample (MSFC-027-SB023A) will be a composite soil sample collected from 16 to 18 feet bgs for analysis of TAL metals.

In addition, composite soil samples will be collected from 16 to 18 feet bgs from four step-out sample locations (contingency samples 23BW01 through 23BW04) (Figure 4-2). These step-outs will be located approximately 5 feet from pre-excavation sample location SB023A (at the location of former boring MSFC-027-SB023). Soils from the step out locations will be held for TAL metals analysis contingent on results of the analytical results from SB023A.

The step-out samples (contingency samples 23BW01 through 23BW04) will not be analyzed if the arsenic concentration detected in pre-excavation sample SB023A is below the CG of 18 mg/kg or the arsenic concentration is deemed to be natural occurring based on a site-to-background evaluation. No corrective measures will be required for deep subsurface soil at this location. However, the step-out samples will be analyzed for TAL metals if SB023A analytical results indicate arsenic contamination greater than the CG of 18 mg/kg. The step-out confirmation samples may also serve as sidewall confirmation samples if the arsenic result is below the CG or the arsenic concentration is determined to be naturally occurring. Additional sampling may be required if arsenic concentrations in step-out locations exceed the CG of 18 mg/kg and are not naturally occurring.

4.2.3 Former Soil Boring MSFC-027-SB024

Soil collected from MSFC-027-SB024 exceeded the CG for arsenic at the 6 to 8 feet bgs interval with a concentration of 35.1 mg/kg. The remaining sample intervals at this boring location contained arsenic concentrations less than the CG. A pre-excavation soil sample (SB024A) will be collected from the location of former boring MSFC-027-SB024. The sample (MSFC-027-SB024A) will be a composite soil sample collected from 6 to 8 feet bgs for analysis of TAL metals.

In addition, composite soil samples will be collected from 6 to 8 feet bgs from four step-out sample locations (contingency samples 24BW01 through 24BW04) (Figure 4-2). These step-outs will be located approximately 5 feet from pre-excavation sample location SB024A (at the location of former boring MSFC-027-SB024). Soils from the step out locations will be held for TAL metals analysis contingent on results of the analytical results from SB024A.

The step-out samples (contingency samples 24BW01 through 24BW04) will not be analyzed if the arsenic concentration detected in pre-excavation sample SB024A is below the CG of 18 mg/kg or the arsenic concentration is deemed to be natural occurring based on a site-to-background evaluation. No corrective measures will be required for deep subsurface soil at this location. However, the step-out samples will be analyzed for TAL metals if SB024A analytical results indicate arsenic contamination greater than the CG of 18 mg/kg. The step-out confirmation samples may also serve as sidewall confirmation samples if the arsenic result is below the CG or the arsenic concentrations is determined to be naturally occurring. Additional sampling may be required if arsenic concentrations in step-out locations exceed the CG of 18 mg/kg and are not naturally occurring.

4.2.4 Former Soil Boring MSFC-027-SB026

Soil samples from former boring MSFC-027-SB026 exceeded the CG for arsenic at the 10 to 12 and the 16 to 18 feet bgs intervals with concentrations of 31.7 and 36.9 mg/kg, respectively. The remaining sample intervals at this boring location contained arsenic concentrations less than the CG (18 mg/kg) except for the 6 to 8 feet bgs sample interval (20.1 mg/kg), which was determined by the geochemical evaluation to be naturally occurring (CB&I, 2014a). Pre-excavation soil samples will be collected from two intervals (10 to 12 and 16 to 18 feet bgs) at boring location SB026A. This boring will be installed at the location of former boring MSFC-027-SB026. The composite samples will be collected from one boring (MSFC-027-SB026A) for TAL metals analysis.

In addition, composite soil samples will be collected from four step-out sample locations (contingency samples 26BW01 through 26BW04) (Figure 4-2). These step-outs will be located approximately 5 feet from pre-excavation sample location SB026A (at the location of former boring MSFC-027-SB026) and composite soil samples will be collected from two soil intervals (10 to 12 and 16 to 18 feet bgs). Soils from the step out locations will be held for TAL metals analysis contingent on results of the analytical results from SB026A.

The step-out samples (contingency samples 26BW01 through 26BW04) will not be analyzed if the arsenic concentrations detected in pre-excavation sample SB026A are below the CG of 18 mg/kg or the arsenic concentrations are deemed to be natural occurring based on a site-to-background evaluation. No corrective measures will be required for deep subsurface soil at this location. However, the step-out samples will be analyzed for TAL metals if SB026A analytical results indicate arsenic contamination greater than the CG of 18 mg/kg. The step-out confirmation samples may also serve as sidewall confirmation samples if the arsenic results are below the CG or the arsenic concentrations are determined to be naturally occurring. Additional

sampling may be required if arsenic concentrations in step-out locations exceed the CG of 18 mg/kg and are not naturally occurring.

4.2.5 Former Soil Boring MSFC-027-SB028

Soils from former boring MSFC-027-SB028 exceeded the CG for arsenic at the 22 to 24 feet bgs interval with a concentration of 28.9 mg/kg. The remaining sample intervals at this boring location contained arsenic concentrations less than the CG (18 mg/kg) except for the 10 to 12 feet bgs sample interval (30.04 mg/kg) and 16 to 18 feet bgs sample interval (28.3 mg/kg), which were determined by the geochemical evaluation to be naturally occurring (CB&I, 2014a). A pre-excavation soil sample (SB028A) will be collected from the location of former boring MSFC-027-SB028. One composite soil sample will be collected 22 to 24 feet bgs from boring MSFC-027-SB028A for analysis of TAL metals.

In addition, composite soil samples will be collected from 22 to 24 feet bgs from four step-out sample locations (contingency samples 28BW01 through 28BW04) (Figure 4-2). These step-outs will be located approximately 5 feet from pre-excavation sample location SB028A (at the location of former boring MSFC-027-SB028). Soils from the step out locations will be held for TAL metals analysis contingent on results of the analytical results from SB028A.

The step-out samples (contingency samples 28BW01 through 28BW04) will not be analyzed if the arsenic concentration detected in pre-excavation sample SB028A is below the CG of 18 mg/kg or the arsenic concentration is deemed to be natural occurring based on a site-to-background evaluation. No corrective measures will be required for deep subsurface soil at this location. However, the step-out samples will be analyzed for TAL metals if SB028A analytical results indicate arsenic contamination greater than the CG of 18 mg/kg. The step-out confirmation samples may also serve as sidewall confirmation samples if the arsenic result is below the CG or the arsenic concentration is determined to be naturally occurring. Additional sampling may be required if arsenic concentrations in step-out locations exceed the CG of 18 mg/kg and are not naturally occurring.

4.3 Preliminary Activities

Preliminary activities include mobilization, requirements for base access, digging permits, utility marking, surveying, and protection of existing site features. All field personnel will follow this work plan and abide by the health and safety requirements presented in the site-specific safety and health plan (Appendix C).

4.3.1 Mobilization

Upon notice to proceed, CB&I will begin mobilization, including the deployment of personnel, equipment, subcontractors, and materials necessary to commence CMI activities at MSFC-027. Mobilization activities will occur at the CB&I Knoxville office and the CB&I field office at RSA in Huntsville, Alabama. Knoxville office activities will include the procurement of rented items and assembling and packing of equipment and supplies for ground transportation to the site. After field mobilization, CB&I personnel will attend a preconstruction meeting and safety orientation to review the proposed approach and the sequencing of work to ensure that clear lines of communication are established. All necessary site-specific safety training will be conducted at this time.

4.3.2 Access to Redstone Arsenal

Access to RSA requires registering at Gate 9 on Rideout Road. Badge requests for access to RSA should be submitted two weeks ahead of the date needed to allow for approval and processing by the RSA host organization. New CB&I personnel and subcontractor personnel will register at the RSA Visitor's Center at Gate 9. Personnel with prior approval from a host RSA organization will be issued a personnel badge upon presentation of proper identification. Temporary passes may be required for some vehicles.

Military and government personnel will present current military (active, retired, or family) or federal government identification cards and do not require a host RSA organization. For further information, contact the Redstone Arsenal Visitors Center located at Gate 9 at (256) 876-1122 or the Vehicle Registration Office at (256) 876-5770.

Registered personnel may access MSFC-027 via Gate 3 at Redstone Road. Gate 3 is open 0530 to 1800 Monday through Friday, except for holidays. Registered personnel may also enter by Gate 1 at Martin Road (also known as the East Gate), following established protocol. The Martin Road Gate is open seven days a week from 0530 to 2400.

4.3.3 Locating, Marking, and Surveying of Excavation

A licensed land surveyor will be subcontracted to delineate the project work boundary and mark the excavation areas. The surveyor will locate these areas based on coordinates provided by CB&I and mark items in the field with highly visible wooden stakes, tape, or pin flags. Surveying methods will follow the procedures specified in the CQAP provided as Appendix D. The proposed excavation areas are shown on Figure 4-1.

4.3.4 Digging Permit and Utility Markout

Prior to conducting any intrusive site activities, CB&I will coordinate with the appropriate RSA personnel to ensure that any underground utilities in the proposed excavation areas at MSFC-027 are located and marked prior to beginning intrusive field activities.

The known permitting required during CMI activities is a digging permit for excavation on RSA administered by the Directorate of Public Works. As part of this permit, RSA will locate and mark underground utilities in the vicinity of excavation. The procedure requires notification by telephone ([256] 876-9881) within 14 days of intrusive activities requesting a work order for a digging permit.

The digging permit must be renewed every 30 days. To avoid temporary shutdown, CB&I will make a request for permit extension at least 1½ weeks prior to digging permit expiration for the extension to be granted.

Before any excavation can be started, an Excavation Permit (CMS-710-02-FM-01601) must be completed by the responsible superintendent with input from the Authorized Person for underground testing (utility identification) and Excavation Competent Person. Appropriate client approval is also necessary where required by client regulations. Client and/or utility company representatives shall be notified 24 hours prior to beginning excavations.

4.3.5 Site Control

CB&I will use the existing fence, temporary construction fencing materials, barricades, and warning tape, as necessary, to delineate the site exclusion zone, contamination reduction zone, and site support zone in compliance with the site-specific safety and health plan (Appendix C). Warning signs will be posted at conspicuous locations around the perimeter of the construction areas to discourage unauthorized entry. An equipment storage and material laydown area will be designated during mobilization.

4.3.6 Storm Water, Erosion, and Sediment Controls

Storm water management and erosion and sediment control will be provided in accordance with the *Alabama Handbook for Erosion Control, Sediment Control and Stormwater Management on Construction Sites and Urban Areas* (Alabama Soil and Water Conservation Committee [ASWCC], 2014).

BMPs will be used to minimize erosion and sedimentation and prevent pollution of water and land at the sites. Installation of temporary controls will be coordinated to maintain effective and continuous control of erosion and pollution. The primary erosion control techniques will be silt fencing and hay bales. Erosion control devices will be inspected weekly and also within 72 hours

of any qualifying precipitation event (any precipitation of 0.75 inch or greater in any 24-hour period). Sediment deposits will be manually removed from the silt fence after each qualifying rainfall event or when sediment reaches one-half of the barrier height. Removed sediment will be added to the contaminated soil for subsequent disposal. Damaged erosion control devices and damaged areas around and beneath the devices will immediately be repaired. Upon completion of the project, erosion and sedimentation control devices will be removed. Appendix F provides details on the BMPs that will be used during implementation of the corrective measures.

4.3.7 Protection of Existing Monitoring Wells

No monitoring wells are located within the soil piles or excavation area. Care will be taken to protect nearby monitoring wells during field work. Consequently, no well closure will be performed during the corrective action.

One bedrock well (Z-RS1237) is within close proximity of the work zones at MSFC-027 and will be conspicuously marked in the field for protection during construction (i.e., safety fencing will be placed around the monitoring well). Although CB&I will safeguard existing monitoring wells, if a monitoring well is inadvertently damaged, the well will be closed in accordance with Standard Operating Project Procedure (SOPP) No. 21, *Monitoring Well and Borehole Abandonment* (Shaw, 2013a) and be in accordance with the AEIRG (ADEM, 2005). Wells damaged as part of the corrective measure activities at MSFC-027 will be replaced in kind.

Well Closure. If necessary, well closure activities will follow SOPP No. 21, *Monitoring Well and Borehole Abandonment* (Shaw, 2013a) and according to the AEIRG (ADEM, 2005). Each well will be closed in place by filling the screened interval with clean silica sand to 2 feet above the top of the screen. After allowing time for the silica sand to settle, a 2-foot-thick bentonite seal will be added above the silica sand. Bentonite pellets are recommended and shall be poured slowly to avoid bridging. The bentonite seal will be allowed to hydrate per the manufacturer's instructions. Neat grout will then be emplaced above the bentonite seal with a tremie pipe for sealing the well. Neat grout is a mixture of portland ASTM International Type I or II cement, water, and bentonite. The organic-free bentonite (granular) will be added at a rate of 2 to 5 pounds of bentonite per 94-pound sack of cement to produce a grout that is 2 to 5 percent bentonite by weight. This will be mixed with 5 to 7.5 gallons of water to create a pumpable slurry. The pads, posts, and casings will be removed during the excavation activities. The well closure activities will be documented on the well closure form in accordance with SOPP No. 1, *Field Documentation* (Shaw, 2013a).

Well Replacement. Following the completion of backfilling operations at MSFC-027, replacement wells will be installed for those damaged or closed in place as part of excavation

activities. Currently, no replacement wells are planned at MSFC-027. Replacement wells would be installed in accordance with procedures outlined in SOPP No. 17, *Monitoring Well Installation* (Shaw, 2013a).

4.3.8 Daily Reports

The requirements for preparation and submittal of daily project documentation are outlined in the CQAP (Appendix D). As indicated in the CQAP, the daily reports (including daily construction logs, etc.) will be provided to the Project Manager or designee during CMI activities. The report will include a running inventory of excavated material.

4.4 Soil Pile Removal/Soil Excavation Activities

The excavations will encompass the sample locations identified exceeding the following CGs for arsenic, PCBs, and pesticides in soil:

COC	Residential Surface Soil CG (mg/kg)	Residential Subsurface Soil CG (mg/kg)
Arsenic	15	18
PCBs (Aroclor 1260)	0.50	0.50
4,4'- DDD (Pesticide)	3.09	3.09
4,4'- DDE (Pesticide)	2.85	2.85
4,4'- DDT (Pesticide)	3.30	3.30

The excavation areas, excavation depths, and anticipated soil volumes are presented below:

- Excavation of Soil Piles 1, 2, and 3 will be performed to remove soils with PCBs at concentrations greater than the CGs. The excavation will cover approximately 8,000 square feet and extend to 1 foot bgs. The average height of these soil piles is estimated to be 4 feet. In addition, shallow soil excavation will be performed in the areas of former soil borings E27-SO02 and E27-SO05 to a depth of 2 feet bgs and former soil boring E27-SO04 to a depth of 3 feet bgs. Approximately 1,946 loose cubic yards will be removed for transport and disposal. The limits of the soil excavation area are shown on Figure 4-1.

- Analytical parameters detected in soil sampled from Soil Pile 4 were below CGs. Nevertheless, the pile will be removed so that the area conforms to the surrounding grade and rid the site of any rubble and debris. Excavation of Soil Pile 4 will cover approximately 5,400 square feet and extend to the ground surface. The average height of Soil Pile 4 is estimated to be 5 feet. Approximately 1,300 loose cubic yards will be removed for transport and disposal. The limits of the soil excavation area are shown on Figure 4-1.

- Excavation of Soil Pile 5 will be performed to remove soil with arsenic and pesticide concentrations greater than CGs. The excavation will cover approximately

7,150 square feet and extend to 1 foot bgs. The average height of Soil Pile 5 is estimated to be 2 feet. In addition, shallow soil excavation will be performed in the area of former soil boring M2708-SB to a depth of 2 feet bgs. Approximately 1,038 loose cubic yards will be removed for transport and disposal. The limits of the soil excavation area are shown on Figure 4-1.

- Shallow soil outside the Soil Pile 5 boundary will also be excavated at former boring locations E27-SB04, MSFC-027-SB021, E27-SB06, and M2707-SB where pesticides and/or PCBs were detected at 0 to 1 foot bgs at concentrations greater than the CGs. Excavation of these areas will cover approximately 350 square feet and extend to 2 foot bgs. An estimated 34 loose cubic yards will be removed for transport and disposal. The limits of the soil excavation areas are shown on Figure 4-1.

- Excavation of Soil Pile 6 will be performed to remove soil with arsenic and Aroclor 1260 concentrations greater than CGs. The excavation will cover approximately 4,050 square feet and extend to 1 foot bgs. The average height of Soil Pile 4 is estimated to be 2.5 feet. In addition, shallow soil excavation will be performed in the area of former soil boring E27-SO15 to a depth of 2 feet bgs. Approximately 688 loose cubic yards will be removed for transport and disposal. The limits of the soil excavation area are shown on Figure 4-1.

- Excavation of deep soils in and around Soil Piles 5 and 6 (former boring locations MSFC-SB022, MSFC-SB023, MSFC-SB024, MSFC-SB026, and MSFC-SB028) will be performed if pre-excavation sampling confirms arsenic concentrations are greater than CGs and are not naturally occurring. Excavation will be performed to a depth 1 foot below the depth of the CG exceedance and is estimated to range from 9 feet bgs to 25 feet bgs. Excavation will not proceed beyond groundwater, if encountered. Assuming a 5-foot-by-5-foot area at each of these former boring locations will generate an additional 110 cubic yards (or more) for transportation and disposal. If traditional excavation methods are used, the excavated soil volume will be much higher due to benching requirements. As mentioned previously, pre-excavation sampling will be performed to refine the limits of excavation of deep soils.

Table 4-1 presents a summary of the areas and depths of the proposed excavations. The limits of the soil excavation areas are depicted on Figure 4-1. At each area, the excavation limits will be surveyed and staked prior to the start of excavation.

Excavation will be accomplished according to the Safety and Health Regulations for Excavations (Occupational Safety and Health Administration 29 Code of Federal Regulations Part 1926 Subpart P). Excavations over 4 feet deep shall be shored, sloped (1 ½:1, horizontal:vertical) or benched as required. Spoils must be placed a minimum of 3 feet from the edge of the excavation. Loose soil or rocks shall be removed from the sides of excavation walls. Personnel shall not enter any excavation over 4 feet deep. Shoring for excavations over 20 feet deep shall be designed by a registered Professional Engineer and any shoring installed shall be approved and

signed off by a registered Professional Engineer. All excavated areas will be adequately secured from the public and filled as soon as possible.

At least 3 feet of clearance between any underground utility and the cutting edge or point of powered excavation equipment will be maintained until the precise location of the utility is determined. Initial excavation within this 3-foot area will be conducted manually. When the excavation areas have been cleared and the excavation limits have been demarcated, CB&I will begin excavating from the designated areas using a backhoe or excavator. CB&I will excavate to the proposed depths shown in Table 4-1.

Soil confirmation samples will be collected from the bottom and sidewalls of each excavation following excavation to verify that the CGs for arsenic, PCBs, and pesticides have been achieved. Section 4.5 discusses the collection of confirmation samples. If floor confirmation sample results at the excavations do not achieve the CG, the excavation will be expanded downward. Any downward extension of the excavation area will proceed in 1-foot increments (minimum) from the original depth for remediation. If the sidewall confirmation samples do not achieve the CG, they will be expanded out a minimum of one bucket width and resampled.

The excavated material will be temporarily stockpiled or staged on or near the site prior to waste characterization sampling and off-site disposal. The excavated material will be staged on impervious material such as plastic sheeting and covered with waterproof material (i.e., tarpaulin or 10-mil plastic sheeting). Containment should control volatilization, runoff, leaching, or fugitive dust emissions. Measures shall be taken to prevent any surface runoff from entering into or washing away from the stockpile. All excavated areas will be adequately secured from the public and filled as soon as possible.

If necessary, dust at the site will be controlled with water using a water truck with hose and sprayers and mulch such as straw. CB&I will apply water to dry exposed areas until the surface is wet and repeat as needed. Water will be applied at rates that prevent runoff. CB&I will not use polymers, tackifiers, stabilizers, or chlorides for dust control. Dust suppression will commence when aerosol levels in the work area or directly downwind reach 2.5 milligrams per cubic meter. This level is one-half the Occupational Safety and Health Administration threshold value for particulates not otherwise regulated (respirable fraction). Measurements will be collected during CMI using a Data Ram PDR 1000 or equivalent real-time aerosol monitor.

4.5 Confirmation Sampling

Following completion of the proposed excavations, confirmation soil samples will be collected within the MSFC-027 proposed excavation areas to ensure that the soil contaminant

concentrations do not exceed the CGs for arsenic, PCBs, or pesticides. The confirmation sampling design is statistically based and follows the guidelines set forth in (1) Section 9.6 of ADEM *General Soil Sample Collection Standard Operating Procedure (SOP) #2150, Rev. 1.1* (ADEM, 2010a); (2) the August 13, 2010 guidance from ADEM, *In-situ Sampling for the Purposes of Waste Characterization/Disposal of Soil* (ADEM, 2010b); and (3) Pacific Northwest National Laboratory (2012) *Visual Sample Plan*.

The confirmation sample locations for the north soil piles (Soil Piles 1, 2, 3 and 4) and south soil piles (Soil Piles 5 and 6) are shown on Figures 4-3 and 4-4, respectively. No confirmation samples will be collected from the removal of Soil Pile 4 because analytical results for all previous samples collected within Soil Pile 4 were below CGs. Composite confirmation samples will be collected around the perimeter sidewalls in all excavation areas (Figures 4-3 and 4-4) and tested for TAL metals, PCBs, and pesticides. Composite confirmation samples will also be collected from the floors of the excavations (Figures 4-3 and 4-4). At a minimum, one confirmation sample will be collected from each excavation wall and floor, resulting in a total of five confirmation samples per excavation area. Confirmation samples will be sent to an off-site analytical laboratory for TAL metals, PCBs, and pesticides analyses on a 5-day turnaround basis. Confirmation samples will be collected in accordance with the DCQAP provided as Appendix E.

Sample designations are shown in Worksheet No. 18 of Appendix E.

Confirmation samples will be collected on each sidewall at a maximum spacing of 50 feet between samples. The points will include a center point of the sidewall section plus aliquots from the upper and lower left and right quadrants of the sidewall section.

Confirmation samples will be collected from the floor of the excavation with a minimum of one sample per 2,500 square feet of floor area (maximum floor areas equal to 50- by 50-foot sections). The multipoint sample will include a center point of the 50- by 50-foot floor section plus aliquots from the north, south, east, and west quadrants of the floor area.

The confirmation soil samples at MSFC-027 will be analyzed for TAL metals, PCBs, and pesticides.

Samples from the perimeter and the floor of the excavations will be collected by stainless-steel spoon and placed in a stainless-steel bowl. Debris such as grass, roots, or gravel will be removed, and the soil will be thoroughly mixed (homogenized) and placed in the appropriate sample containers in accordance with SOPP Nos. 2.0, 5.0, 6.0, and 24.0. Sample collection logs will be filled out to document the sampling in accordance with SOPP No. 1.0.

If floor confirmation sample results do not achieve the CG, the excavation will be expanded downward. Aliquots from deeper excavations (greater than 4 feet in depth) will be collected from an excavator bucket. As discussed in Section 4.2, the pre-excavation step-out confirmation samples may also serve as sidewall confirmation samples if the arsenic result is below the CG or the arsenic concentration is determined to be naturally occurring.

Confirmation samples will be collected using routine quality assurance/quality control sample frequencies (i.e., 10 percent field duplicates, 5 percent matrix spike/matrix spike duplicate). All sample containers, preservatives, and holding times will conform to the requirements specified in the DCQAP (Appendix E).

All analytical data generated from this project will be managed in accordance with the procedures specified in the DCQAP, except only the final confirmation sample results will be validated. Sample documentation, custody, packaging, and shipping will follow the procedures specified in the DCQAP. Custody will be maintained at all times by the CB&I sampling team prior to shipment to the analytical laboratory using typical chain-of-custody forms.

4.6 Remediation-Derived Waste/Investigation-Derived Waste Management

Other remediation-derived waste (RDW) generated during the CMI activities at MSFC-027 is expected to include decontamination fluids and disposable personal protective equipment (PPE).

AAC 335-14-3-.01(2) allows the use of generator knowledge in the hazardous waste determination process. Generator knowledge consists of an evaluation of the following four factors:

1. ***Process Knowledge*** – The site processes are evaluated to determine if any activity might have generated a listed waste which still persists in soil or groundwater.

2. ***Past Investigation-Derived Waste Management Practices*** – Investigation-derived waste (IDW) has been managed at RSA for over 20 years. Changes to regulations directing this management have been minor. The Army intends to follow management practices which have been accepted by ADEM during prior investigations.

3. ***Sampling Results from Past Waste Characterization Sampling*** – Historical waste characterization sampling may indicate whether future IDW is likely to be a nonhazardous waste or to have characteristics of a hazardous waste.

4. ***Sampling Results from Past Soil and Groundwater Sampling*** – Historical sampling results from soil and groundwater sampling may indicate whether future IDW is likely to be a nonhazardous waste or to have characteristics of a hazardous waste.

Based on previous sampling results, it is assumed that excavated soil will pass the arsenic toxicity characteristic leaching procedure (TCLP) limit of 5 milligrams per liter and that pesticide-contaminated soil will be below regulatory levels for the characteristic of toxicity. In addition, it is assumed that PCBs concentrations will be less than 50 mg/kg and not regulated under the Toxic Substances Control Act (TSCA). Consequently, arsenic, PCBs, and pesticide-contaminated soil will be managed as a nonhazardous waste until deemed otherwise by waste characterization sampling.

Solid RDW, liquid RDW, and PPE are examples of RDW that will be managed. All RDW will be containerized, labeled, and stored in compliance with the provisions of AAC 335-14, as applicable, and as discussed in the AEIRG (ADEM, 2005). PPE that is contaminated by site media will be disposed of with the contaminated waste stream (i.e., PPE generated during soil excavation will be disposed of at a Subtitle D landfill). PPE that is uncontaminated will be placed in trash bags and disposed of in a dumpster at the CB&I field office (Building 7471) as normal household trash. Other types of RDW, if generated, will be managed in accordance with Table 2 of Appendix G of the AEIRG (ADEM, 2005).

For RDW considered to be nonhazardous using generator knowledge and field observations, soil cuttings and liquid waste will be containerized and stored on site pending sampling and analysis. Analytical testing and subsequent evaluations will be performed to determine if soil may be disposed of off site at a Subtitle D landfill. Sampling and analysis of RDW are discussed in Appendix E.

In the event that any soil IDW is determined to be hazardous, contingency actions will be taken to manage and dispose of the waste as specified in SOPP No. 4.0, *Investigation Derived Waste*. IDW believed to be hazardous will be containerized in 55-gallon drums or other suitable containers with tight-fitting lids or other covers. Presumed hazardous IDW will be labeled, moved to a satellite accumulation area or 90-day storage within 72 hours, or managed on site in a 90-day storage area, as specified in SOPP No. 4.0. IDW will be disposed of as specified in SOPP No. 4.0, *Investigation Derived Waste*.

A RCRA hazardous waste determination/evaluation is required by AAC 335-14-3-.01(2) and will be made utilizing waste identification criteria outlined in AAC R. 335-14-2-.01 through 335-14-2-.04. Analytical results from soil and groundwater IDW samples will be used to determine whether the waste is hazardous or nonhazardous and, for nonhazardous IDW, to determine the contaminant concentrations for disposal purposes. Types of analyses are site specific but typically include TCLP VOCs, TCLP SVOCs, and TCLP metals. Waste for which TCLP results exceed limits specified in AAC 335-14-2-.03, Table 1, will be managed as

hazardous waste and sent offsite for treatment and disposal in accordance with Federal and State regulations.

Examples of nonhazardous soil RDW disposal practices for MSFC-027 include soil disposal (arsenic) at a Subtitle D landfill. For nonhazardous water RDW, possible management options include processing through RSA's sewage treatment plant or an appropriate RCRA-permitted facility. Examples of disposal practices for hazardous waste include disposal of solid (soil) hazardous waste in a landfill permitted to accept the waste based on the specific contaminants and concentrations in the soil, and treatment of the RDW hazardous liquids will be in accordance with ADEM regulations and the disposal facility permit. When a Subtitle D landfill is selected for RDW disposal, RSA will contact the EPA Region 4 off-site coordinator to ensure that the facility selected for soil disposal does not have any operational or regulatory issues.

4.7 Waste Characterization of Soil Piles/Excavated Soil Stockpiles

Contaminated soils will either be stockpiled during the excavation at MSFC-027, or if approved by a Subtitle D landfill, loaded for immediate transport and disposal. The stockpiles will be divided into individual 200-cubic yard volumes (or less) with a surface area of roughly 20 feet by 25 feet. For each stockpile, grab samples will be randomly retrieved from three exterior points of the pile from a depth between 0 and 2 feet. Two additional samples will be taken from the interior of the pile at a depth between 2 and 5 feet. The grab samples from the five points within each decision unit will be composited. Each of these composites, representing 200 cubic yards, will be tested for TCLP metals, TCLP pesticides and PCBs.

Waste characterization samples will be sent to an off-site analytical laboratory for TCLP arsenic, TCLP pesticides, and PCBs analyses on a 5-day turnaround basis. Stockpile samples will be collected in accordance with the DCQAP provided as Appendix E.

TCLP metals, TCLP pesticides, and PCBs data will be needed for landfill acceptance requirements. No additional quality assurance/quality control samples (other than the method-required batch quality control) will be required for the waste characterization samples.

Upon receipt of the analytical data, the waste characterization sample results will be compared to the regulatory levels for TCLP arsenic, TCLP pesticides, and PCBs. Based upon previous sampling results, the soils at MSFC-027 are not expected to be characteristically hazardous. No known source of contamination involving a process and/or chemical triggering a listed waste code designation has been identified in the waste soils process of generation. In addition, PCB concentrations are expected to be less than 50 mg/kg, and so are not expected to be a waste

regulated under TSCA. Therefore, it is expected that the contaminated soils at MSFC-027 will be managed as a nonhazardous waste and disposed of in a Subtitle D landfill.

4.8 Waste Soil Transportation and Disposal

CB&I will use a licensed transportation and disposal subcontractor to complete these activities. It is anticipated that the excavated soil will be disposed of as waste (nonhazardous) at a Subtitle D landfill. Transportation and disposal of the excavated waste will begin after approval by ADEM (typically 4 to 6 weeks after receipt of the solid waste profile sheet) and the selected waste disposal facility. Prior to transport, an RSA representative will review and sign the waste manifest.

During loading activities, CB&I will document the quantities of waste loaded onto the dump truck and facilitate the bill of lading or shipping paper documentation for the nonhazardous waste shipments. Any waste determined to be hazardous waste must be on a hazardous waste manifest and have a Land Disposal Restriction notification prior to being sent off site for disposal. Transportation will comply with all U.S. Department of Transportation regulations. CB&I will coordinate with the transporters so that the waste will be shipped to arrive on schedule at the landfill. CB&I will receive written approval from the landfill (and ADEM) prior to shipping waste to their facility. The landfill will provide CB&I with a certificate of disposal for each load received and processed.

4.9 Post-Excavation Activities

4.9.1 Backfilling and Site Restoration

Upon completion of all soil excavation activities, CB&I will obtain approximately 5,100 cubic yards of fill material from an RSA borrow area, another approved off-site borrow source, or equivalent. If sampling of the borrow source material has not been conducted, CB&I will sample the material to confirm it is acceptable for use as backfill at the site. The borrow material sampling, if required, will include one 5-point composite sample analyzed for target compound list (TCL) SVOCs, TCL pesticides/polychlorinated biphenyls, and TAL metals and one sample analyzed for TCL VOCs. Borrow samples will be collected in accordance with the DCQAP provided as Appendix E.

The analytical results for TAL metals will be screened against BSVs and residential soil PSVs as supplemented by a site-to-background evaluation if needed. Soil concentrations for VOCs, SVOCs, and pesticides/PCBs will be screened against their respective residential soil PSVs to demonstrate that the material is acceptable for use. If an existing borrow source is utilized, the

analytical parameters and acceptance limits will be at least as stringent as those proposed for new borrow sources.

The backfill material will be placed by the excavator, spread in maximum 12-inch loose lifts, and compacted with the excavator prior to placement of the next lift. Any uncontaminated soil removed during excavation activities may also be placed in the excavation. Dust at the site will be controlled with water using a water truck with hose and sprayers and mulch such as straw. CB&I will apply water to dry exposed areas until the surface is wet and repeat as needed. Water will be applied at rates so that runoff does not occur. CB&I will not use polymers, tackifiers, stabilizers, or chlorides for dust control. Dust suppression will commence when aerosol levels in the work area or directly downwind reach 2.5 milligrams per cubic meter. This level is one-half the Occupational Safety and Health Administration threshold value for particulates not otherwise regulated (respirable fraction). Measurements will be collected during CMI using a Data Ram PDR 1000 or equivalent real-time aerosol monitor.

When backfilling and compaction is completed, clean topsoil will be placed over the affected areas. The areas will then be seeded and mulched to stimulate revegetation in the affected areas and reduce the potential for soil erosion. Seed and mulch will be applied to all disturbed areas according to the BMP handbook from the ASWCC (ASWCC, 2014), which is included in Appendix F.

A site inspection will be conducted 2 to 4 weeks after the seeding to confirm the revegetation is successful. If revegetation is unsuccessful, the site will be reseeded until an adequate stand of vegetation is present. All temporary fencing, plastic sheeting, hay bales, wooden stakes, and other project-related items will be removed from the site and disposed of in accordance with SOPP No. 4.0, *Investigation Derived Waste* (Shaw, 2013a).

4.9.2 Equipment Decontamination

CB&I will designate an area within the boundary of the work areas at MSFC-027, adjacent to vehicular ingress and egress areas, for equipment decontamination. A decontamination pad typically consists of a soil-bermed area covered with multiple layers of plastic sheeting where gross contamination can be removed from equipment. The decontamination pad will contain a sump area or low area where wash water from pressure washing will drain to be pumped into a portable holding tank. Decontamination fluids will be sampled for pesticides, PCBs, and TAL metals. Decontamination fluids will be managed as discussed in Section 4.6. Settled soil within the sump will be disposed of with the excavated materials from MSFC-027.

Nondisposable sampling equipment will be decontaminated prior to beginning work at the site and prior to the collection of individual samples to prevent cross contamination and maintain the integrity of the environmental samples collected. All sampling equipment and heavy equipment will be decontaminated in accordance with procedures specified in the RSA installation-wide quality assurance program plan (Shaw, 2013a), which was prepared in accordance with Appendix E of the AEIRG (ADEM, 2005).

4.9.3 Temporary Storm Water, Erosion, and Sediment Control Removal

Upon completion of site restoration activities, temporary erosion and sediment controls will be removed and disposed of off site at the RSA construction debris landfill. The silt fence will remain in place until after the vegetation is established. When the silt fence is removed, the posts will be pulled from the ground and the remaining disturbed area will be reseeded. Excess soils will be removed from the silt fence and disposed of with the RDW from the excavation. The removed silt fence will be disposed of at the RSA construction and debris landfill.

4.9.4 Demobilization

Personnel, equipment, and subcontractors will be demobilized from the project site after completion of remedial activities. A small crew and minimal equipment will be retained as required to remove surplus materials and clean staging areas.

Demobilization will primarily consist of disassembly, packing, and return of rented equipment to suppliers and travel for personnel back to their home offices.

4.10 Inspections for Field Activities

Inspections may be performed to determine compliance with this work plan. The inspection criteria are included in the field audit checklist (Appendix D) and will be verified during inspection activities. Inspections may be performed and verified through visual observation, measurement of materials or equipment, examination of documentation/certification, evaluation of performance, or testing.

Inspections will be performed using a three-phase inspection method. Participants in the inspections typically include but are not limited to the task subcontractor, the project quality control manager, the regulatory representative, and the project health and safety representative. The preparatory inspection(s) are performed prior to start-up and will examine training, procedures, equipment and materials, work plans and documents, and overall readiness to perform work. Initial inspection(s) are performed when work begins on a particular feature of work and include an examination of the quality of workmanship and a review of control testing for compliance with work plan requirements. Follow-up inspection(s) are then performed to

verify compliance with procedures. Follow-up inspections will ensure a continuation of quality and safety standards established during preparatory and initial inspections until completion of the definable work feature. Final follow-up inspection(s) will be conducted at the completion of the activity. The final follow-up inspection will be performed to ensure that the completed feature of work meets the work plan requirements. Any deficiencies noted during this inspection will be documented and a determination will be made as to the corrective actions necessary to mitigate the deficiency. All significant deficiencies will be corrected prior to completion of the activity. Records of inspections will be maintained in the project files. At a minimum, inspection files will include inspection reports/checklists, inspection responses, and any supporting documents, as well as applicable comments.

4.11 Corrective Measures Implementation Reporting

CMI reporting includes submittal of a final CMI report after construction is completed. There is no plan for submittal of a progress or annual report during CMI. CB&I plans to complete implementation of the ADEM-approved CMI within 180 days of starting construction. However, if completion requires greater than 180 days, the Army will submit CMI progress reports in accordance with Section VIII.D.1 of the Permit. Upon completion of the approved CMI, a final report will be prepared and submitted to ADEM to satisfy the applicable requirements of the AEIRG (ADEM, 2005). The final report of corrective measures will be submitted within 90 days of attainment of CGs pursuant to Part VIII.D of the Permit. The final report will include the following:

a) A description of activities completed

b) As-built construction drawings presenting the final limits of soil excavations at each site and the locations of confirmation samples

c) Waste manifests indicating the handling of the excavated material that has been shipped off site to an ADEM-approved, certified landfill

d) Monitoring data (soil, air, dust, and water) collected for any reason during the construction period for the purposes of monitoring potential for human and ecological exposure

e) Certification, prepared in accordance with AAC 335-13-8-02 (2)(d) by RSA and a registered professional engineer (State of Alabama), that the corrective measures required by the Permit are complete

f) Appendices consisting of site photographs, analytical reports, data validation documentation, and waste manifests.

5.0 Contingencies

The implementation of corrective measures is based on the best information currently available for MSFC-027. It is recognized that variations from this CMI work plan may be required during the execution phase of the work in order to fully address actual site conditions in a timely manner that is protective of human health and the environment. The Army, ADEM, or other relevant parties may take actions to grant such variances from this CMI work plan during the corrective measures process. Any variance will be documented and included with the completion report for the site.

Some potential site conditions that may be encountered at MSFC-027 are discussed in the following sections.

5.1 Excavation of Arsenic in Deep Subsurface Soil

Based upon the results of pre-excavation design optimization sampling results, excavation of arsenic-contaminated subsurface soil may be required at former RFI boring locations MSFC-027-SB022, -SB023, -SB024, -SB026, and -SB028. The corrective measures study for MSFC-027 (CB&I, 2014b) proposed utilizing large-diameter augers (e.g., 24-inch diameter) to remove subsurface soil containing elevated concentrations of arsenic. This technology is an option if arsenic contamination is confined within a small area. However, the use of slide rail may be better suited if a larger area of deep soil removal is required. The use of slide rail will result in much smaller soil volumes being managed due to sloping and benching requirements used with traditional excavation techniques. Final selection of excavation approach will be determined upon receipt of pre-excavation design optimization sample results discussed in Section 4.2. If traditional excavation is required, standard procedures for collecting confirmation samples along the excavation floor and sidewalls will be followed.

5.2 Excavation Beyond Proposed Boundaries

The soil excavations at MSFC-027 will proceed until the CGs for arsenic, PCBs, and pesticides have been achieved. The procedures for overexcavating sidewalls and floor samples are presented in the following bullets:

- If the sidewall confirmation samples do not achieve the CGs, the failing section will be expanded outward a minimum of one bucket width (approximately 3 feet) and resampled. The overexcavation process will continue until the CGs have been achieved or until further expansion of the excavation would threaten the stability of adjacent features such as buildings, roadways, etc.

- If floor confirmation sample results do not achieve CGs, the excavation will be expanded downward. Any downward extension of the excavation area will proceed in 1-foot increments (minimum) from the original depth for remediation. This process will proceed until CGs have been achieved, the average water table has been reached, or groundwater begins to enter the excavation from the sidewalls or floor.

5.3 Discovery of Subsurface Contaminant Sources

Although no subsurface contaminant sources are expected to be encountered during the MSFC-027 excavation activities, subsurface piping, drains, or other undiscovered sub-slab contaminant sources may be encountered. If any of these subsurface contaminant sources are encountered during the excavation, the feature will be handled in the following manner:

- If free liquid is found within the feature, it will be addressed as follows:
  - Small amounts will be mixed with dry soil from the excavation or an absorbent until no free liquid is visible.
  - Amounts too large for mixing/absorption will be removed, tested, and disposed of as a separate waste stream.
- Abandoned piping, drains, etc., that are within the excavation area will be excavated and staged along with the surrounding soil and disposed of in like manner with the surrounding soil.
- If a conduit extends outside the excavation and that boundary of the excavation has passed the CG, the conduit will be plugged with at least 2 feet of cement grout.

5.4 Excavation Dewatering

In the event that standing surface water and storm water inhibit excavation activities at the MSFC-027 site, the water will be removed from the construction area by pumping. As discussed in Section 4.3.6, storm water controls will be implemented to direct potential run-on away from the site. Prior to reaching the limits of construction, the water will be passed through two silt fence barriers or equivalent. Water that has not come into contact with contaminated soil will be removed and discharged downgradient of the excavation. The discharged water will be directed through two silt fence barriers, or equivalent, to remove silt/sediment prior to leaving the project site. If the water does come into contact with contaminated soil, it will be pumped into a tank and sampled for disposal characterization.

5.5 Excavation of Unknown Utilities

If unknown utilities are discovered or existing utilities are compromised during excavation, work will stop in that portion of the work area until the utilities are identified and either relocated or repaired by the utility company or other appropriate authorities. Continuation of work in other

portions of the project site will depend on evaluation of potential hazards related to the utility issue. That evaluation will be performed by the project safety officer in consultation with the CB&I Health and Safety Manager.

5.6 Saturated Soil Removal

Although unlikely, in the event contaminated soil becomes saturated in an excavation or stockpile area, the Site Manager will initiate measures to ensure that the soil can be prepared for transport and disposal. Those measures may include one or more of the following:

- Create an area within or adjacent to the affected area where excess water is allowed to drain and can then be collected.
- Mix saturated soil with dry soil (i.e., post waste characterization) ex situ prior to disposal.
- As a last resort, add absorbent to ensure no free liquids are present during transportation to the disposal facility.

5.7 Discovery of Munitions and Explosives of Concern/Chemical Warfare Materiel

Available information including historical records and recent environmental sampling data was reviewed with respect to munitions and explosives of concern (MEC) including chemical warfare materiel (CWM), or CA potential at MSFC-027. The review indicated that the probability of encountering unknown liquid-filled munitions or other items, measurable concentrations of CA or agent breakdown products is low. The hazard evaluation process is documented in the MEC/CWM/CA hazard forms provided in Attachment 1 of the site-specific safety and health plan (Appendix C). Based on this evaluation, it was determined that no CA monitoring or on-site unexploded ordnance support will be required for the CMI. However, in the event any suspicious item is encountered, all work shall stop and the Project Manager and Health and Safety Manager will be notified and will be responsible for following the notification requirements in RSA 75-4 (Army, current version). If the suspicious item can be positively identified by qualified unexploded ordnance personnel as not presenting an explosive or CA hazard or once the hazard has been removed, work will proceed. Further information on this hazard identification, notification, and removal process is presented in RSA's installation-wide accident prevention plan (Shaw, 2013b).

6.0 References

A.T. Kearney, Inc., 1989, ***Interim RCRA Facility Assessment Report of the Redstone Arsenal, Huntsville, Alabama***, September.

Alabama Department of Environmental Management (ADEM), 2015, ***Redstone Arsenal's Alabama Hazardous Waste Management and Minimization Act Hazardous Waste Storage Facility, Thermal Treatment, Solid Waste Management Unit Corrective Action Permit, Modification No. 6***, July.

Alabama Department of Environmental Management, (ADEM), 2010a, ***General Soil Sample Collection Standard Operating Procedure (SOP) #2150, Rev. 1.1***, July.

Alabama Department of Environmental Management, (ADEM), 2010b, ***In-situ Sampling for the Purposes of Waste Characterization/Disposal of Soil***, Memorandum issued by James L. Bryant, Environmental Services Branch, August.

Alabama Department of Environmental Management (ADEM), 2008a, ***Draft RCRA Facility Assessment, Redstone Arsenal, Huntsville, Alabama***, Draft, EPA ID Number AL7 201 020 742, September.

Alabama Department of Environmental Management (ADEM), 2008b, ***Alabama Risk-Based Corrective Action Guidance Manual – Revision 2,*** April.

Alabama Department of Environmental Management (ADEM), 2005, ***Alabama Environmental Investigation and Remediation Guidance***, September.

Alabama Soil and Water Conservation Committee (ASWCC), 2014, ***Alabama Handbook for Erosion Control, Sediment Control, and Stormwater Management on Construction Sites and Urban Areas***, September.

CB&I Federal Services LLC (CB&I), 2015, ***Community Involvement Plan, U.S. Army Garrison-Redstone, Madison County, Alabama***, prepared for U.S. Army Environmental Command, September.

CB&I Federal Services LLC (CB&I), 2014a, ***Revision 1 RCRA Facility Investigation Report, MSFC-027, Inactive Waste Accumulation Area, Operable Unit 18, U.S. Army Garrison-Redstone, Madison County, Alabama***, June.

CB&I Federal Services LLC (CB&I), 2014b, ***Corrective Measures Study Report, MSFC-027, Inactive Waste Accumulation Area, Operable Unit 18, U.S. Army Garrison-Redstone, Madison County, Alabama***, May.

Geraghty and Miller, Inc. (G&M), 1991, ***Final Identification and Evaluation of Potential Solid Waste Management Units and Areas of Concern, Redstone Arsenal, Alabama***, consulting report prepared for U.S. Army Corps of Engineers, Huntsville District, Huntsville, Alabama, February.

IT Corporation (IT), 1999a, ***Draft Interim Report of Findings of the Characterization at the Former M-1 Waste Accumulation Area, MSFC-027, Redstone Arsenal, Madison County, Alabama,*** December.

IT Corporation (IT), 1999b, ***Draft Action Memorandum, Time-Critical Removal Action At MSFC-027, Former M-1 Waste Accumulation Area, Operable Unit 5, Redstone Arsenal, Madison County, Alabama***, prepared for U.S. Army Corps of Engineers, Savannah District, December.

National Aeronautics and Space Administration (NASA), 2012, ***Groundwater Monitoring Report for 2011***, prepared for National Aeronautics and Space Administration Marshall Space Flight Center, February.

Pacific Northwest National Laboratory, 2012, ***Visual Sample Plan***, U.S. Department of Energy, Release Version 6.2d.

Rust Environment and Infrastructure, 1998, ***Draft Final Site Screening Remedial Investigation Report for RSA-64, 69 and 70, MSFC-2, 3, 27, 34, 53, 55, 60, 65, 74, 77, and 82;*** October.

Shaw Environmental, Inc. (Shaw), 2013a, ***Final, Revision I, Installation-Wide Quality Assurance Program Plan for the Program Management Contract, Volume I and Volume II, U.S. Army Garrison-Redstone, Madison County, Alabama***, September.

Shaw Environmental and Infrastructure, Inc. (Shaw), 2013b***, Installation-Wide Accident Prevention Plan, Final, US Army Garrison-Redstone, Madison County***, Alabama, July.

Shaw Environmental, Inc. (Shaw), 2012a, ***Site-Specific Field Sampling Plan for a Phase II RCRA Facility Investigation at MSFC-027, Inactive Waste Accumulation Area, Operable Unit 18, Redstone Arsenal, Huntsville, Alabama,*** U.S. Army Garrison-Redstone, Madison County, Alabama, April.

Shaw Environmental, Inc. (Shaw), 2012b, ***Site-Specific Field Sampling Plan for a Phase III RCRA Facility Investigation at MSFC-027, Inactive Waste Accumulation Area, Operable Unit 18, Redstone Arsenal, Huntsville, Alabama,*** U.S. Army Garrison-Redstone, Madison County, Alabama, December.

Shaw Environmental, Inc. (Shaw), 2012c, ***Project Management Plan for Task Order 0008, U.S. Army Garrison-Redstone, Madison County, Alabama***, September.

Shaw Environmental, Inc. (Shaw), 2011, ***Site-Specific Field Sampling Plan for a RCRA Facility Investigation at MSFC-027, Inactive Waste Accumulation Area, Operable Unit 18, Redstone Arsenal, Huntsville, Alabama,*** U.S. Army Garrison-Redstone, Madison County, Alabama, March.

Shaw Environmental, Inc. (Shaw), 2010a, ***Installation-Wide Work Plan, Final Appendices B, C, D, E, F, Redstone Arsenal, Madison County, Alabama***, September.

Shaw Environmental, Inc. (Shaw), 2010b, ***Draft Evaluation of Risks Due to Intrusion of Volatile Organic Compounds in Soil Vapor to Indoor Air At RSA-146, U.S. Army Garrison–Redstone, Madison County, Alabama***, February.

Shaw Environmental, Inc. (Shaw), 2009, ***Final Installation-Wide Groundwater Land-Use Control Remedial Design, Redstone Arsenal, Madison County, Alabama, Revision 1***, prepared for the U.S. Army Corps of Engineers, Savannah District, May.

Shaw Environmental, Inc. (Shaw), 2007, ***Final Interim Record of Decision, Interim Remedial Action for Installation-Wide Groundwater, Redstone Arsenal, Madison County, Alabama,*** prepared for the U.S. Army Corps of Engineers, Savannah District, Savannah, Georgia, September.

Shaw Environmental, Inc. (Shaw), 2006, ***Base-Wide Overburden Potentiometric Map and Letter Report, Redstone Arsenal, Madison County, Alabama***, prepared for the U.S. Army Corps of Engineers, Savannah District, Savannah, Georgia, April.

U.S. Army Garrison-Redstone (Army), 2012, ***Redstone Arsenal Environmental Site Access Control Program***, Redstone Arsenal Regulation 200-7, September.

U.S. Army Garrison-Redstone (Army), current version, ***Redstone Arsenal Garrison: Munitions and Explosives of Concern Program Policy,*** Regulation 75-4, prepared by the U.S. Army Garrison, Redstone Arsenal, Alabama.

U.S. Environmental Protection Agency (EPA), 2013, ***Regional Screening Levels for Chemical Contaminants at Superfund Sites, Mid-Atlantic Risk Assessment***, May.

U.S. Environmental Protection Agency (EPA), 2012, ***Regional Screening Levels for Chemical Contaminants at Superfund Sites, Mid-Atlantic Risk Assessment***, May.

U.S. Environmental Protection Agency (EPA), 2002, ***OSWER Draft Guidance for Evaluating the Vapor Intrusion to Indoor Air Pathway from Groundwater and Soils (Subsurface Vapor Intrusion Guidance)***, EPA 530-D-02-004, November.

ATTACHMENT 1

LIST OF ACRONYMS AND ABBREVIATIONS

List of Abbreviations and Acronyms
Redstone Arsenal, Madison County, Alabama

Acronym	Definition
µg/g	micrograms per gram
µg/kg	micrograms per kilogram
µg/L	micrograms per liter
µmhos/cm	micromhos per centimeter
µS/cm	microsiemens per centimeter
$\mu g/m^3$	micrograms per cubic meter
ºC	degrees Celsius
ºF	degrees Fahrenheit
%D	percent difference
%R	percent recovery
1,1,2-TCA	1,1,2-trichloroethane
1,1-DCE	1,1-dichloroethene
1,2-DCE	1,2-Dichloroethene
2,4,5-T	2,4,5-trichlorophenoxyacetic acid
2,4,5-TP	2,4,5-trichlorophenoxypropionic acid
2,4-D	2,4-dichlorophenoxyacetic acid
2-ADNT	2-amino-4,6-dinitrotoluene
4-ADNT	4-amino-2,6-dinitrotoluene
AAC	Alabama Administrative Code
AAFES	Army and Air Force Exchange Service
AAP	Army Ammunition Plant
AB	ambient blank
ABLM	adult blood lead model
ABP	agent breakdown products
ABS	dermal absorption factor
ACAD	AutoCadd
ACGIH	American Conference of Governmental Industrial Hygienists
ACM	asbestos-containing material
ACSIM	Assistant Chief of Staff for Installation Management
ADAF	age-determined adjustment factor
ADEM	Alabama Department of Environmental Management
ADPH	Alabama Department of Public Health
AEC	U.S. Army Environmental Command
AEDA	ammunition, explosives, and other dangerous articles
AEDB	Army Environmental Database
AEIRG	Alabama Environmental Investigation and Remediation Guidance
AEL	airborne exposure limit
AET	apparent effects threshold
AF	soil-to-skin adherence factor
AGS	Alabama Geographic Society
AHA	ammunition holding area
AHWMMA	Alabama Hazardous Wastes Management and Minimization Act
AIPH	Army Institute of U.S. Public Health
AL	Alabama
ALDOT	Alabama Department of Transportation
ALNHP	Alabama Natural Heritage Program
amb.	amber
amsl	above mean sea level (1988 North American Vertical Datum, NAVD 88)
ANOVA	Analysis of Variance
AOC	area of concern
AOI	area of investigation
AP	armor piercing
APEC	areas of potential ecological concern
APHC	U.S. Army Public Health Center
APT	armor-piercing tracer
AR	Army Regulation
AR/COC	analysis request/chain of custody
ARAR	applicable or relevant and appropriate requirement
ARBCA	Alabama Risk-Based Corrective Action
AREE	area requiring environmental evaluation
ARFO	ammunition returned from overseas
Army	U.S. Army
AS	air sparging
ASCII	American Standard Code for Information Interchange
ASP	Ammunition Supply Point
ASR	archives search report
AST	aboveground storage tank
ASTM	American Society for Testing and Materials
ASV	alternative screening value
ASWCC	Alabama Soil and Water Conservation Committee
AT	averaging time
ATF	Bureau of Alcohol, Tobacco, Firearms and Explosives
$atm\text{-}m^3/mol$	atmospheres per cubic meter per mole
ATSDR	Agency for Toxic Substances and Disease Registry
ATTN	attention
ATV	all-terrain vehicle
AUF	area use factor

List of Abbreviations and Acronyms
Redstone Arsenal, Madison County, Alabama

Acronym	Definition
AWARE	Associated Water and Air Resources Engineers, Inc.
AWBC	alternative water balance cover
AWQC	ambient water quality criteria
AWQS	ambient water quality standard
B	Analyte detected in laboratory or field blank at concentration greater than the reporting limit (and greater than zero)
BAF	bioaccumulation factor
$BAF_{soil\text{-}to\text{-}invert}$	soil-to-invertebrate bioaccumulation factor
BaOH	barium hydroxide
BAP	benzo(a)pyrene
BCF	bioconcentration factor
BCT	BRAC Cleanup Team
BDCM	bromodichloromethane
BEHP	bis(2-ethylhexyl)phthalate
BEM	Buried Explosion Module
BERA	baseline ecological risk assessment
BFB	bromofluorobenzene
BFE	base flood elevation
BFM	bonded fiber matrix
BG	Bacillus globigii
bgs	below ground surface
Bhate	Bhate Environmental Associates, Inc.
BHC	hexachlorocyclohexane
BHHRA	baseline human health risk assessment
BIM	basic information map
BIP	blow(n)-in-place
bkg	background
bls	below land surface
BMP	best management practice
BOD	biological oxygen demand
Bp	soil-to-plant biotransfer factors
BR	bedrock
BR-D	deep bedrock
BRAC	Base Realignment and Closure
BSAF	biota-to-sediment accumulation factors
BSC	background screening criterion
BSCRN	bottom of screen
BSV	background screening value
BTAG	Biological Technical Assistance Group
BTEX	benzene, toluene, ethyl benzene, and xylenes
BTOC	below top of casing
BTV	background threshold value
BW	body weight
BZ	breathing zone
C	ceiling limit value
C&D	Construction & Demolition
Ca	carcinogen
CA	chemical agent; corrective action
CAA	Clean Air Act
CAB	chemical warfare agent breakdown products
CACM	Chemical Agent Contaminated Media
$CaCO_3$	calcium carbonate
CAIS	chemical agent identification set
CalEPA	California Environmental Protection Agency
CAMU	corrective action management unit
CAP	corrective action plan; Contractor Acquired Property
CARA	corrective action request
CARA	Chemical, Biological, Radiological, Nuclear, and High-Yield Explosives (CBRNE) Analytical and Remediation Activity
CAS	Chemical Abstracts Service
CASNO	Chemical Abstract Service identification number
CASRN	Chemical Abstracts Service Registry Number
CB	chlorobenzene
CB&I	CB&I Federal Services LLC
CBFM	collodial borescope flowmeter
CBMPP	construction best management practices plan
CBR	chemical, biological, and radiological
CBRN	chemical, biological, radiological, nuclear
CBRNE	Chemical, Biological, Radiological, Nuclear, and High-Yield Explosives
CBZ	chlorobenzene
CCAL	continuing calibration
CCB	continuing calibration blank
CCC	criterion continuous concentration
CCl_4	carbon tetrachloride
CCV	continuing calibration verification
CD	compact disk; Consent Decree
CDI	chronic daily intake
CDTF	Chemical Defense Training Facility
CEHNC	U.S. Army Engineering and Support Center, Huntsville

List of Abbreviations and Acronyms
Redstone Arsenal, Madison County, Alabama

Acronym	Definition
CERCLA	Comprehensive Environmental Response, Compensation, and Liability Act
CERFA	Community Environmental Response Facilitation Act
CESAS	Corps of Engineers South Atlantic Savannah
CF	conversion factor
CFC	chlorofluorocarbon
CFDP	Center for Domestic Preparedness
CFR	Code of Federal Regulations
cfs	cubic feet per second
C_{fw}	contaminant concentration in fish from surface water
CG	phosgene (carbonyl chloride); cleanup goal
CGI	combustible gas indicator
ch	inorganic clays of high plasticity
CHPPM	U.S. Army Center for Health Promotion and Preventive Medicine
CIH	Certified Industrial Hygienist
cis-1,2-DCE	cis-1,2-Dichloroethene
CK	cyanogen chloride
Cl	chloride, chlorinated
CLIN	contract line item number
ClO_4^-	perchlorate
CLP	Contract Laboratory Program
CLPILM	EPA CLP's prefix designation for the inorganic metals analysis statement of work
CLP M	EPA CLP's prefix designation for the mercury analysis statement of work
CM	corrective measure
cm	centimeter
cm/hour	centimeters per hour
cm^2	cubic centimeter
cm^2/second	square centimeters per second
cm^3/g	cubic centimeters per gram
CMA	U.S. Army Chemical Materials Activity; corrective measure alternative
CMC	criterion maximum concentration
CMD	corrective measures design
CMI	corrective measures implementation
CMIP	corrective measures implementation work plan
CMO	corrective measure objective
CMS	corrective measures study
CMT	Continuous Multichannel Tubing
CN	chloroacetophenone
CNB	chloroacetophenone, benzene, and carbon tetrachloride
CNS	chloroacetophenone, chloropicrin, and chloroform
CO	carbon monoxide
CO_2	carbon dioxide
Co-60	cobalt-60
CoA	Code of Alabama
COAC	chemical of analytical concern
COC	when discussing chemicals, COC means chemical of concern; when discussing field paperwork, COC means chain of custody
COE	Corps of Engineers
COI	constituent of interest
Con	skin or eye contact
COPAC	chemical of potential analytical concern
COPC	chemical of potential concern
COPEC	chemical of potential ecological concern
COR	Contracting Officer's Representative
CP	communication plan; Competent Person
CPOM	coarse particulate organic matter
CPSS	chemicals present in site samples
CPVC	chlorinated polyvinyl chloride
C_{pw}	chemical of potential ecological concern concentration in pore water
CQAP	construction quality assurance plan
CRA	Conestoga-Rovers and Associates
CRDL	contract-required detection limit
CRL	certified reporting limit
CRP	community relations plan; compliance-related program
CRQL	contract-required quantitation limit
CRSA	Central Redstone Arsenal
CRZ	contamination reduction zone
CS	ortho-chlorobenzylidene-malononitrile
CSA	confirmation sampling activities
C_{sed}	chemical of potential ecological concern concentration in sediment from groundwater
CSEM	conceptual site exposure model
CSM	conceptual site model
CSP	chemical site plan
CSP	corrugated steel pipe
CSS	chemical safety submission
CT	carbon tetrachloride
CTC	cost to completion
ctr.	container

List of Abbreviations and Acronyms
Redstone Arsenal, Madison County, Alabama

Acronym	Definition
CVAA	2-chlorovinylarsenous acid
C_w	contaminant concentration in water
CWA	when discussing chemicals, CWA means chemical warfare agent; when discussing laws, CWA means Clean Water Act
CWM	If used in the text of a document this acronym means chemical warfare materiel; if used in an analytical table which summarizes container requirements, this acronym means clear, widemouth container
CWS	Chemical Warfare Service
CX	dichloroformoxime
D	duplicate; duplicate contamination; when used as a validation qualifier, D means dilution
D2PC	Personal Computer Program for Chemical Hazard Prediction
DAD	average dermally absorbed dose
DAVS	detector-aided visual survey
D&I	detection and identification
DA	Department of the Army
DA PAM	Department of the Army Pamphlet
DAAMS	Depot Area Air Monitoring System
DA_{event}	dermal dose absorbed per event
DAF	dilution-attenuation factor
DAF4	dilution-attenuation factor 4
DANC	decontamination agent, non-corrosive
DAP	diammonium phosphate
DASAF	Department of the Army Safety Office
DAVS	detector-aided visual survey
DBA	dibenz(a,h)anthracene
DBCP	1,2-dibromo-3-chloropropane
DC	District of Columbia
DCA	dichloroethane
DCB	decachlorobiphenyl
DCE	dichloroethene
DCMA	Defense Contract Management Agency
DCQAP	data collection quality assurance plan
DD	Decision Document
DD	Department of Defense (form only)
DDD	dichlorodiphenyldichloroethane (this is an industry standard acronym for this chemical)
DDE	dichlorodiphenyldichloroethene (this is an industry standard acronym for this chemical)
DDESB	Department of Defense Explosives Safety Board
DDT	dichlorodiphenyltrichloroethane
DEH	Directorate of Engineering and Housing
DEHP	bis(2-ethylhexyl)phthalate
DEMIL	Demilitarization Areas
DEP	depositional soil
DERP	Defense Environmental Restoration Program
DES	Directorate of Environment and Safety
DF	dilution factor
DFTPP	decafluorotriphenylphosphine
DFOW	Definable Feature of Work
DGM	digital geophysical mapping
DHC	*Dehalococcoides* sp.
DI	deionized
DID	data item description
DIMP	di-isopropylmethylphosphonate
DL	detection limit
DM	adamsite
DMBA	dimethylbenz(a)anthracene
DMM	discarded military munitions
DMMP	dimethylmethylphosphonate
DNAPL	dense nonaqueous-phase liquid
DNB	dinitrobenzene
DNBZ	dinitrobenzene
DNOC	4,6-dinitro-2-methylphenol
DNT	dinitrotoluene
DO	dissolved oxygen
DoD	U.S. Department of Defense
DODI	Department of Defense Instruction
DOJ	U.S. Department of Justice
DOT	U.S. Department of Transportation
DP	direct-push
DPDO	Defense Property Disposal Office
DPT	direct-push technology
DQCR	Daily Quality Control Report
DQO	data quality objective
DRMO	Defense Reutilization and Marketing Office
DRO	diesel range organics
DS	deep (subsurface) soil
DS2	Decontamination Solution Number 2
DSERTS	Defense Site Environmental Restoration Tracking System
DSMOA	Defense and State Memorandum of Agreement
DSN	Defense Switched Network
DTSC	Department of Toxic Substances Control
DU	decision unit

List of Abbreviations and Acronyms
Redstone Arsenal, Madison County, Alabama

Acronym	Definition
DUA	data usability assessment
DVD	digital versatile disc or digital video disc
DWEL	drinking water equivalent level
e.g.	for example
E3	Electromagnetic Environmental Effects
EB	equipment blank
EBS	environmental baseline study
EC_{20}	effects concentration for 20 percent of a test population
EC_{50}	effects concentration for 50 percent of a test population
ECBC	Edgewood Chemical and Biological Center
Eco-RGRG	ecological risk-based remedial goal
Eco-SSL	ecological soil screening level
ECM	earth covered magazine
ED	exposure duration
EDD	electronic data deliverable
EDQL	ecological data quality level
EDTA	ethylenediaminetetracetic acid
EE/CA	engineering evaluation and cost analysis
EF	exposure frequency
EFR	enhanced fluid recovery
Eh	oxidation-reduction potential
ELAP	Environmental Laboratory Accreditation Program
Elev.	elevation
EM(1)	electromagnetic
EM(2)	Engineer Manual
EM31	Geonics Limited EM31 Terrain Conductivity Meter
EM61	Geonics Limited EM61 High-Resolution Metal Detector
EMI	electromagnetic induction
Empirical	Empirical Laboratories, LLC
EMSI/EL	Environmental Management Services, Inc./Environmental Laboratories
EMT	emergency medical technician
EOC	Emergency Operation Center
EOD	explosive ordnance disposal
EODT	explosive ordnance disposal team; EOD Technology, Inc.
EP	exit pathway
EPA	U.S. Environmental Protection Agency
EPC	exposure point concentration
EPDS	Emergency Personnel Decontamination Station
EPIC	Environmental Photographic Interpretation Center
EPP	Environmental Protection Plan
EPRI	Electrical Power Research Institute
EPT	Ephemeroptera, Plecoptera, Trichoptera
EQ	EQ Environmental Quality Company
EQL	estimated quantitation limit
ER	equipment rinsate; USACE Engineer Regulation
ERA	ecological risk assessment
ERH	electrical resistive heating
ERIS	Environmental Restoration Information System
ER-L	effects range-low
ER-M	effects range-medium
ESA	ecologically sensitive area
ESB	Equilibrium Partitioning Sediment Benchmark
ESE	Environmental Science and Engineering, Inc.
ESL	ecological screening level
ESP	explosives site plan
ESMP	Endangered Species Management Plan; Explosives Safety Management Program
ESS	explosives safety submission
ESTCP	Environmental Security Technology Certification Program
ESV	ecological screening value
ET	exposure time
ET_{sw}	exposure time - surface water
EU	exposure unit
EUR	Environmental Use Restriction
EV	event frequency
E-W	east to west
Excel	Excel Geophysical Services
Exp.	Explosives
EXTOXNET	Extension Toxicology Network
Ey	Etowah silty clay loam
EZ	exclusion zone
FA	fraction absorbed
FAC	facultative wetland
FACU	facultative upland
FACW	facultative wetland
FADL	Field Activity Daily Log
FAR	Federal Acquisition Regulations
FAV	final acute value
FB	field blank
FBI	Family Biotic Index

List of Abbreviations and Acronyms
Redstone Arsenal, Madison County, Alabama

Acronym	Definition
FCSV	food chain screening value
FCV	final chronic value
FD	field duplicate
FDA	U.S. Food and Drug Administration
Fe^{+2}	ferrous iron
Fe^{+3}	ferric iron
FEC	fluid electrical conductivity
FedEx	Federal Express, Inc.
FEMA	Federal Emergency Management Agency
FFA	Federal Facilities Agreement
FFCA	Federal Facilities Compliance Act
FFE	field flame expedient
FFP	firm fixed price
FFS	focused feasibility study
FI	fraction of exposure; filtered
FID	flame ionization detector
FIFRA	Federal Insecticide, Fungicide, & Rodenticide Act
FLUTe	Flexible Liner Underground Technologies, Ltd. Co.
FM-ARNGTC	Fort McClellan Army National Guard Training Center
FMDC	Fort McClellan Development Commission
FML	flexible membrane liner
f_{oc}	fraction organic carbon
FOIA	Freedom Of Information Act
FOMRA	Former Ordnance Motor Repair Area
FOST	Finding of Suitability to Transfer
Foster Wheeler	Foster Wheeler Environmental Corporation
FR	Federal Register
Frtn	fraction
FS	feasibility study
FSH	Fort Sam Houston
FSP	field sampling plan
FS smoke	sulfur trioxide and chlorosulfonic acid
ft	foot, feet
ft/day	feet per day
ft/ft	feet per foot
ft/yr	feet per year
ft^2	square feet
ft^2/day	square feet per day
FTA	Fire Training Area
FUP	fixed unit price
FWV	fieldwork variance
FY	fiscal year
g	gram
G&M	Geraghty and Miller, Inc.
g/cm^3	grams per cubic centimeter
g/m^2	grams per square meter
g/m^3	gram per cubic meter
G-856	Geometrics, Inc. G-856 magnetometer
G-858G	Geometrics, Inc. G-858G magnetic gradiometer
GA	tabun
GAC	granular activated carbon
GAF	General Aniline and Film; gastrointestinal absorption factor
gal	gallon
gal/min	gallons per minute
GB	sarin (isopropyl methylphosphonofluoridate)
GC	gas chromatograph
GC/MS	gas chromatograph/mass spectrometer
GCL	geosynthetic clay liner
GCMR	Geophysical Classification for Munitions Response
GCWD	Gulf Chemical Warfare Depot
GCWS	Gulf Chemical Warfare Service
GEAE	Generic Ecological Assessment Endpoint
GEDIT	gaseous electron donor injection technology
GFAA	graphite furnace atomic absorption
GIP	geophysical investigation plan
GIS	geographic information system
GNSS	Global Navigation Satellite System
GPCR	gas phase chemical reduction
gpm	gallons per minute
GPR	ground-penetrating radar
GPS	global positioning system
GRA	general response action
GRIM	Groundwater Responsibility Information Matrix
GRO	gasoline range organics
GS	ground scar

List of Abbreviations and Acronyms
Redstone Arsenal, Madison County, Alabama

Acronym	Definition
GSA	when discusing the federal government requirements, GSA means General Services Administration; when discussing geology, GSA means Geologic Survey of Alabama
GSE	Great Southern Engineering
GSR	green and sustainable remediation
GST	ground stain
GSV	geophysical systems verification
GUC	groundwater use control
GW	groundwater
GWDT	Groundwater Design Team
GWMZ	groundwater monitoring well, multizone
GWTR	groundwater monitoring well
H&S	health and safety
H_2O_2	hydrogen peroxide
H_2S	hydrogen sulfide
HA	hand auger; hazard assessment
HAL	Health Advisory level
HAMUST56	Huntsville Arsenal Mustard Plant 2, Lines 5 & 6
Harmon	Harmon Engineering Associates, Inc.
HAZMATCAD™	Hazardous Material Chemical Agent Detector
HAZWOPER	Hazardous Waste Operations and Emergency Response
HBESL	health-based environmental screening level
HC	mixture of hexachloroethane, aluminum powder, and zinc oxide (smoke producer)
HCl	hydrochloric acid
HD	distilled mustard (bis-[dichloroethyl]sulfide); hazard division
HDPE	high-density polyethylene
HE	high explosive
HEAST	Health Effects Assessment Summary Tables
HEAT	High Explosive Anti-Tank
Herb.	herbicides
HFD	hazardous fragment distance
HHAWQS	human health Alabama water quality standard
HHRA	human health risk assessment
HHRE	human health risk evaluation
HI	hazard index
HI_{COC}	total hazard index for a given relevant COC, for a given receptor added across all exposure routes for given source medium
Hi_{cum}	cumulative hazard index summed across chemicals and source media
HI_{TO}	total hazard index for a given target organ for a given receptor
Hm	hot measurement
HMW	high molecular weight
HMX	cyclotetramethylenetetranitramine; octahydro-1,3,5,7-tetranitro-1,3,5,7-tetrazocane
HN	hydrogen mustard
HNC	hydrogen cyanide
HNO_3	nitric acid
HP	hydropunch
HPLC	high-performance liquid chromatography
HQ	hazard quotient
HQ_{COCi}	hazard quotient for the target organ of interest estimated for the ith COC
$'HQ_i$	hazard index for a given chemical summed across exposure routes and source media
$'HQ_{Ri}$	hazard quotient for the given chemical for exposure route i
HQ_{screen}	screening-level hazard quotient
hr	hour
HRR	Historical Records Review
HS	mustard
HSA	hollow-stem auger
HSB	Huntsville Spring Branch
HSDB	Hazardous Substances Data Bank
HSMR	Huntsville Spring Branch at Martin Road
HT	British Mustard
HTPB	hydroxy-terminated polybutadiene
HTRW	hazardous, toxic, and radioactive waste
HTW	hazardous and toxic waste
HUB	Historically Underutilized Business
HWCL	hazardous waste control limit
HWSU	hazardous waste storage unit
HY	hydrostratigraphic unit
HYPN	hydropunch
Hz	hertz
I	out of control, data rejected due to low recovery
I-565	Interstate 565
IAP	Installation Action Plan
IATA	International Air Transport Authority
I-AVSS	instrument-aided visual surface sweep
ICAL	initial calibration
ICAM	improved chemical agent monitor
ICB	initial calibration blank
ICP	inductively coupled plasma

List of Abbreviations and Acronyms
Redstone Arsenal, Madison County, Alabama

Acronym	Definition
ICS	interference check sample
ICV	initial calibration verification
ID	identification; inside diameter
IDL	instrument detection limit
IDLH	immediately dangerous to life or health
IDM	investigative-derived media
IDQTF	Intergovernmental Data Quality Task Force
IDS	intrusion detection system
IDW	investigation-derived waste; investigative-derived waste
i.e.	that is (in other words)
IELCR	individual excess lifetime cancer risk
$IELCR_{coc}$	total individual excess lifetime cancer risk for a given relevant chemical of concern, for a given receptor added across all exposure routes for a
'$IELCR_{Cum}$	cumulative cancer risk for a given receptor summed across chemicals and source media
'$IELCR_{Ri}$	cancer risk for the given chemical in a given source medium for exposure route i
'$IELCR_{T}$	total cancer risk for the given chemical in a given source medium summed across exposure routes
$IELCR_{(Ti)}$	total cancer risk for chemical i in a given source medium summed across exposure routes
IEOC	Installation Emergency Operations Center
IEUBK	Integrated Exposure Uptake Biokinetic
IF	ingestion factor; inhalation factor
IIP	intrusive investigation plan
ILCR	incremental lifetime cancer risk
ILM	EPA CLP's prefix designation for the inorganic metals analysis statement of work for EPA contract laboratory program
IM	interim measure; isobutyl methacrylate
IMU	inertial measurement unit
IM-AE	isobutyl methacrylate polymer AE
IMPA	isopropylmethyl phosphonic acid
in.	inch
Inc.	Incorporated
Ing	ingestion
Inh	inhalation
INT	interface
IOU	integrator operable unit
IP	ionization potential
IPS	International Pipe Standard
IR	ingestion rate
IRAO	interim remedial action objective
IRDMIS	Installation Restoration Data Management Information System
IR_{f}	fish ingestion rate
'IR_{sw}	ingestion rate
IRFNA	inhibited red fuming nitric acid
IRIS	Integrated Risk Information System
IROD	interim record of decision
IRP	Installation Restoration Program
IRSL	industrial regional screening level
IS	incremental sampling
ISAB	in situ anaerobic bioremediation
ISBN	International Standard Book Number
ISL	initial screening level
ISO	industry standard object
ISTD	in situ thermal destruction
ISTT	in situ thermal treatment
IT	IT Corporation
ITEMS	IT Environmental Management System™
ITRC	Interstate Technology and Regulatory Council
IV	intervention value
IVS	instrument verification strip
IW	installation-wide
IWGW	installation-wide groundwater
IWWP	installation-wide work plan
J	estimated concentration
J&E	Johnson and Ettinger
JD	jurisdictional determination
JOR	job order request
K	conductivity
KAPSDIDS	Kinetically Adjustable Pore Spaace Dilation Injection Delivery System
K_{d}	soil-water distribution coefficient
Kd_{bs}	bed sediment-sediment pore water partition coefficient
KeV	kilo electron volt
kg	kilogram
kg/m^{3}	kilograms per cubic meter
$KMnO_{4}$	potassium permanganate
KO	Contracting Officer
K_{p}	permeability coefficient
K_{oc}	organic carbon partioning coefficient
K_{ow}	octanol-water partition coefficient

List of Abbreviations and Acronyms
Redstone Arsenal, Madison County, Alabama

Acronym	Definition
kVA	kilovolt-ampere
L	if used as part of the units of measure, the acronym stands for "liter", if used as a chemical name, this acronym stands for lewisite
L/cm^3	liters per cubic centimeter
L/day	liters per day
L/kg/day	liters per kilogram per day
LANL	Los Alamos National Laboratory
lb	pound
LBP	lead-based paint
lbs/year	pounds per year
LC	liquid chromatography
LC_{50}	lethal concentration for 50 percent population tested
LCS	laboratory control sample
LCSD	laboratory control sample duplicate
LD_{50}	lethal dose for 50 percent population tested
LDD	lost, damage, or destruction
LEL	lower explosive limit
LF	Leaching Factor
LiDAR	Light Detection and Ranging
LL	low level
LLC	limited liability company
LNAPL	light nonaqueous-phase liquid
LOAEL	lowest-observed-adverse-effects level
LOD	limit of detection
LOEC	lowest-observable-effect-concentration
LOQ	limit of quantitation
LSA	limited site assessment
LSV	leachate screening value
LTM	long-term management
LTV	leachate threshold value
LUC	land-use control
LUCAP	land-use control assurance plan
LUCER	land-use control effectiveness report
LUCIP	land-use control implementation plan
m	meter
m/year	meters per year
m/yr	meters per year
m/second	meters per second
m^3/hour	cubic meters per hour
m^3/kg	cubic meters per kilogram
MACOM	Major Command
MADEP	Massachusetts Department of Environmental Protection
MARB	Munitions Assessment Review Board
max	maximum
MB	method blank
MC	munitions constituents
MCDZ	McDonald Creek discharge zone
MCE	Maximum Credible Event
MCL	maximum contaminant level
MCLG	maximum contaminant level goal
MCPA	4-chloro-2-methylphenoxyacetic acid
MCPP	2-(2-methyl-4-chlorophenoxy)propionic acid
MCS	media cleanup standard
MD	munitions debris; Mahalanobis Distance
MDAS	Material Documented as Safe
MDC	maximum detected concentration
MDCC	maximum detected constituent concentration
MDEH	Material Documented as an Explosive Hazard
MDL	method detection limit
MEC	munitions and explosives of concern
MEE	methane, ethane, and ethene
MEP	Multiple Extraction Procedure
MeV	mega electron volt
Mfp	Mississippian Fort Payne
mg	milligrams
mg/cm^2	milligrams per square centimeter
mg/cm^2/day	milligrams per square centimeter per day
mg/cm^2/event	milligrams per square centimeter per event
mg/day	milligrams per day
mg/kg	milligrams per kilogram
mg/kg-day	milligram per kilogram per day
mg/kgbw/day	milligrams per kilogram of body weight per day
mg/L	milligrams per liter
mg/m^3	milligrams per cubic meter
mgal	million gallons
MGFD	munition with the greatest fragmentation distance
mh	inorganic silts, micaceous or diatomaceous fine, sandy or silt soils

List of Abbreviations and Acronyms
Redstone Arsenal, Madison County, Alabama

Acronym	Definition
MHz	megahertz
MI	multi-incremental
MICC	Mission & Installation Contracting Command
min	minimum
MINICAMS	miniature continuous air monitoring system
MIS	Management Information System
mL	milliliter
mm	millimeter
MMAS	Mobile Munitions Assessment Systems
MMBtu/hr	million Btu per hour
MMCS	Missile and Munitions Command School
MM-CX	Military Munitions Center of Expertise
MMRP	Military Munitions Response Program
Mn^{+4}	manganese
MNA	monitored natural attenuation
MnO_4^-	permanganate ion
MNR	monitored natural recovery
MOA	Memorandum of Agreement
MOCA	4,4-methylene-bis(2-chloroaniline)
MOGAS	motor vehicle gasoline
MOUT	Military Operations in Urban Terrain
MP	Military Police
MPA	methyl phosphonic acid
MPC	maximum permissible concentration; measurement performance criteria
MPM	most probable munition
MPPEH	Material Potentially Presenting an Explosive Hazard
MPR	4.2-Inch Mortar Proofing Range
MQL	method quantitation limit
MQO	measurement quality objective
MR	molasses residue; munitions response
MRA	munitions response area
MRC	multiple round container
MRL	method reporting limit
MRL	minimal risk level
MRR	Materials Receiving Report
MRS	Munitions Response Site
MS	matrix spike
mS/cm	millisiemens per centimeter
mS/m	millisiemens per meter
MS/MSD	matrix spike/matrix spike duplicate
MSD	when discussing laboratory QC, MSD means matrix spike duplicate; when discussing explosives, MSD means minimum separation distance
MSFC	George C. Marshall Space Flight Center
msl	mean sea level
Mt	Mississippian Tuscumbia Limestone
MTBE	methyl tertiary butyl ether
M&TE	measurement and test equipment
mV	millivolts
MW	monitoring well
Na	sodium
N/A	not applicable
NA	not applicable
NAD	North American Datum
NAD83	North American Datum of 1983
$NaMnO_4$	sodium permanganate
NAPL	nonaqueous-phase liquid
NAS	National Academy of Sciences
NASA	National Aeronautics and Space Administration
NAVD 88	North American Vertical Datum, 1988 adjustment
NAVD88	North American Vertical Datum of 1988
NB	nitrobenzene
NBA	Northern Burial Area
NCEA	National Center for Environmental Assessment
NCP	National Contingency Plan
NCR	nonconformance report
NCRP	National Council on Radiation Protection and Measurements
ND	not detected
NDA	Northern Disposal Area
NDMA	n-nitrosodimethylamine
NDPA	n-nitroso-di-n-propylamine
NE	northeast
NELAP	National Environmental Laboratory Accreditation Program
NEPA	National Environmental Protection Act
NEW	net explosive weight
NFA	no further action
NFG	National Functional Guidelines
NFPA	National Fire Protection Agency

List of Abbreviations and Acronyms
Redstone Arsenal, Madison County, Alabama

Acronym	Definition
NG	National Guard
ng/L	nanograms per liter
NGB	National Guard Bureau
NGP	National Guardsperson
NGVD	National Geodetic Vertical Datum
Ni	nickel
NIC	notice of intended change
NIOSH	National Institute for Occupational Safety and Health
NIST	National Institute of Standards and Technology
NJDEP	New Jersey Department of Protection
NLM	National Library of Medicine
NLT	no later than
NMEA	National Marine Electronics Association
No.	number
NO_3^-	nitrate
NOAA	National Oceanic and Atmospheric Administration
NOAEL	no-observed-adverse-effects level
NOEC	no-observable-effect concentration
NONEL	non-electric
NP	nitropropyl
NPDES	National Pollutant Discharge Elimination System
NPL	National Priorities List
NPW	net present worth
NR	not requested
NRC	National Research Council
NRCC	National Research Council of Canada
NRHP	National Register of Historic Places
NRL	Naval Research Laboratory
NRT	near real time
ns	nanosecond
NS	not surveyed
N-S	north to south
NSA	New South Associates, Inc.
NT	nitrotoluene
nT	nanotesla
nT/m	nanoteslas per meter
NTCRA	Non-Time Critical Removal Action
NTIS	National Technical Information Service
NTU	nephelometric turbidity unit
nv	not validated
NY DOH	New York State Department of Health
O&G	oil and grease
O&M	operation and maintenance
O_2	oxygen
O_3	ozone
OB/OD	open burn/open detonation
OBL	obligate
OCDD	octachlorodibenzo-p-dioxin
OD	outside diameter; other (nonmunitions) debris
OE	ordnance and explosives
OEC	Ordnance Explosives Center
OEHHA	Office of Environmental Health Hazard Assessment (of the California Environmental Protection Agency)
OESS	Ordnance and Explosives Safety Specialist
OGMS	Ordnance Guided Missile School
oh	organic clays of medium to high plasticity
OH·	hydroxyl radical
ol	organic silts and organic silty clays of low plasticity
OMEMS	Ordnance Munitions and Electronic Maintenance School
OP	organophosphorus; organochlorine pesticide
ORA	Operational Range Assessment
ORAP	Operational Range Assessment Program
Ord	Ordovician
ORP	oxidation-reduction potential
OSA	Open Storage Area
OSD	overage/shortage/damage
OSHA	Occupational Safety and Health Administration
OSWER	Office of Solid Waste and Emergency Response
OU	operable unit
OVA	organic vapor analyzer
OVB	overburden
OVB-S	shallow overburden
OVM	organic vapor monitoring
OVM-PID/FID	organic vapor meter-photoionization detector/flame ionization detector
OWS	oil/water separator
oz	ounce
P&T	pump and treat
PA	preliminary assessment

List of Abbreviations and Acronyms
Redstone Arsenal, Madison County, Alabama

Acronym	Definition
PA3	Plant Area 3, Incendiaries Manufacturing
PAED	Public Access Exclusion Distance
PAH	polynuclear aromatic hydrocarbon
PAL	preliminary action level
PARCCS	precision, accuracy, representativeness, comparability, completeness, and sensitivity
Parsons	Parsons Engineering Science, Inc.
Pb	lead
PBAA	polybutadiene acrylic acid
PBAN	polybutadiene/acrylic acid/acrylonitrile
PBC	performance-based contract
PBMS	performance-based measurement system
PC	permeability coefficient
PCA	tetrachloroethane
PCB	polychlorinated biphenyl
PCDD	polychlorinated dibenzo-p-dioxins
PCDF	polychlorinated dibenzofurans
PCE	tetrachloroethene
PCMIA	Personal Computer Memory Card International Association
PCP	pentachlorophenol
PCR	polymerase chain reaction
PDA	Personal Digital Assistant
PDB	polyethylene diffusive bag sampler
PDF	Portable Document Format
PDS	Personnel Decontamination System
PDT	Project Delivery Team
PEC	probable effect concentration
PEF	particulate emission factor
PEL	permissible exposure limit
PELA	P.E. LaMoreaux and Associates, Inc.
PERA	preliminary ecological risk assessment
PERC	perchloroethene
PES	potential explosive site
Pest.	pesticides
PETN	pentaerythritol tetranitrate
PFO	palustrine forested wetland
PFT	portable flamethrower
PG	professional geologist
pg/g	picograms per gram
PgM	program manager
pH	measure of acidity/alkalinity; hydrogen ion activity (negative of the logarithm, base 10)
PID	photoionization detector
PIEZ	piezometer
PINS	portable isotopic neutron microscopy
PK	packer
PLS	Professional Land Surveyor
PLS	Professional (licensed) Land Surveyor
PM	project manager
PMC	Program Management Contract
PNMSCM	Product Manager for Non-Stockpile Chemical Materiel
PMP	Project Management Plan
PMTP	Program Management Team Plan
POC	point of contact
POL	petroleum, oils, and lubricants
POTW	publicly owned treatment works
POW	prisoner of war; palustrine open water
Powell	John Powell Chemical Company
PP	Proposed Plan
ppb	parts per billion
ppbv	parts per billion by volume
PPE	personal protective equipment
ppm	parts per million
PPMP	Print Plant Motor Pool
PPRTV	provisional peer-reviewed toxicity values
ppt	parts per trillion
ppT	parts per thousand
PQL	practical quantitation limit
PR	potential risk
PRA	preliminary risk assessment
PRE	preliminary risk evaluation
PRG	preliminary remediation goal
PRO	petroleum range organics
PS	chloropicrin
PSA	potential source area
PSL	preliminary screening level
PSS	palustrine scrub shrub
PSSC	potential site-specific chemical
PSV	preliminary screening value

List of Abbreviations and Acronyms
Redstone Arsenal, Madison County, Alabama

Acronym	Definition
pt	peat or other highly organic silts
PT1	an incendiary mixture in munitions
PTFE	Polytetrafluoroethylene (Teflon)
PTMP	program team management plan
PTSM	principal threat source material
PVC	polyvinyl chloride
PWS	performance work statement
PZ	piezometer
QA	quality assurance
QA/QC	quality assurance/quality control
QAM	quality assurance manual
QAO	quality assurance officer
QAPP	quality assurance project plan
QASAS	Quality Assurance Specialist Ammunition Surveillance
QASP	Quality Assurance Surveillance Plan
QC	quality control
QCP	quality control plan
QCSM	Quality Control Site Manager
QCSR	quality control summary report
Q-D	quantity-distance
QL	quantitation limit
QP	Qualified Person
Q-Q	quantile-quantile
QSAR	quantitative structure-activity relationship
QSM	quality systems manual
QST	QST Environmental, Inc.
qty	quantity
Qual	qualifier
QuickSilver	QuickSilver Analytics, Inc.
R	when used as a validation qualifier, R means rejected; when used as a lab qualifier, R means resample; when used in text, R means retardation factor
R&A	relevant and appropriate
R^2	coefficient of determination
RA	remedial action
RA(O)	remedial action (operations)
RAO	remedial action objective
RAP	recommended action plan
RAR	remedial action report
RARE	Redstone Arsenal Rocket Engine
RAWP	remedial action work plan
Raytheon	Raytheon Company
RBA	relative bioavailability
RBC	risk-based concentration
RBP	Rapid Bioassessment Protocol
RBRG	risk-based remedial goal
RBSC	risk-based screening concentration
$RBSC_I$	risk-based screening concentration for industrial soil
$RBSC_R$	risk-based screening concentration for residential soil
$RBSC_T$	risk-based screening concentration for tap water
RBTL	risk-based target level
$RBTL_{coc}$	risk-based target level for a given relevant COC, receptor, and source medium
RC	representative concentration; response complete
RC_{coc}	representative concentration of the relevant COC in the given medium
RCA	root cause analysis
RCRA	Resource Conservation and Recovery Act
RCRA CA	Resource Conservation and Recovery Act Corrective Action
RCWM	Recovered Chemical Warfare Materiel
RD	remedial design
RDECOM	U.S. Army Research, Development, and Engineering Command
RDX	hexahydro-1,3,5-trinitro-1,3,5-triazine; cyclotrimethylenetrinitramine; 1,3,5-trinitro-1,3,5-triazine (cyclonite); Royal Demolition Explosive
REG	regular field sample
REL	recommended exposure limit; reference exposure level
RER	Record of Environmental Review
Rev	Revision
RF	response factor
RFA	request for analysis
RfC	reference concentration
RfD	reference dose
RFI	RCRA facility investigation
RFQ	request for quotation
RG	remedial goal
RGO	remedial goal option
RI	remedial investigation
RIP	remedy in place
RL	reporting limit
RM	risk management
RM-1	Risk Management-1

List of Abbreviations and Acronyms
Redstone Arsenal, Madison County, Alabama

Acronym	Definition
RM-2	Risk Management 2
RME	reasonable maximum exposure
RMP	risk management plan
Ro	Robertsville silt loam
ROD	Record of Decision
ROF	report of findings
ROI	radius of influence
ROP	Redstone Ordnance Plant
ROPS	roll over protection system
RPD	relative percent difference
RR	range residue
RRF	relative response factor
RRSE	Relative Risk Site Evaluation
RRSL	residential regional screening level
RS	prefix for groundwater monitoring well at Redstone Arsenal
RSA	Redstone Arsenal
RSD	relative standard deviation
RSL	Regional Screening Level
RSP	Redstone Arsenal spring
RTAP	Real-Time Analytical Platform
RTC	Redstone Test Center
RTECS	Registry of Toxic Effects of Chemical Substances
RTK	real-time kinematic
RTS	robotic total station
RTTC	Redstone Technical Test Center
Rust	Rust Environment and Infrastructure, Inc.
s/n	signal-to-noise ratio
SA	exposed skin surface area; source area
SAA	satellite accumulation area
SAC	site access control
SACIMS	Site Access Control Information Management System
SACP	Site Access Control Plan
SAD	South Atlantic Division
SAE	Society of Automotive Engineers
SAIC	Science Applications International Corporation
SAP	sampling and analysis plan
SAR	structure-activity relationship
SARA	Superfund Amendments and Reauthorization Act
SB	soil boring
SC	specific conductance
SCG	storage compatibility group
SCBA	self-contained breathing apparatus
Sch.	schedule
SCM	site conceptual model
SD	sediment
SDG	sample delivery group
SDS	safety data sheet
SDSW	sediment/surface water
SDWA	Safe Drinking Water Act
SDZ	surface danger zone
SED	Software Engineering Directorate
SEE	steam enhanced extraction
SF	cancer slope factor
SFSP	site-specific field sampling plan
SGF	standard grade fuels
Shaw	Shaw Environmental, Inc.
SHP	safety and health plan
SI	site inspection
Sil	Silurian
SIM	Selective Ion Monitoring
SIR	secondary investigation report
SL	standing liquid
SLERA	screening-level ecological risk assessment
SM	sulfur monochloride
SMDP	Scientific Management Decision Point
SMF	smoke munitions filling
SMF 3	Smoke Munitions Filling Plant 3
SMP	site management plan
SNR	signal-to-noise ratio
SO_4	sulfate
SOD	soil oxidant demand
SOP	standard operating procedure
SOPP	standard operating project procedure
SP	submersible pump
SPA	single point anomaly
SPCC	system performance calibration compound
SPCS	State Plane Coordinate System

List of Abbreviations and Acronyms
Redstone Arsenal, Madison County, Alabama

Acronym	Definition
SPLP	synthetic precipitation leaching procedure
SPM	sample planning module
SPRG	spring
SQG	sediment quality guideline
SQRT	screening quick reference tables
SRA	streamlined human health risk assessment
SRB	sulfate-reducing bacteria
SRI	supplemental remedial investigation
SRM	standard reference material
SS	surface soil
SSC	site-specific chemical
SSHO	site safety and health officer
SSHP	site-specific safety and health plan
SSL	soil screening level
SSSL	site-specific screening level
SSTL	site-specific target level
SSPA	site-specific probability assessment
STB	supertropical bleach
STC	source-term concentration
STD	standard deviation
Std. units	standard units
STEL	short-term exposure limit
STP	sewage treatment plant
STL	Severn-Trent Laboratories
STT	sludge thickener tank
SU	sampling unit when used in a grid for incremental sampling; when used as a unit for pH, this acronym stands for standard unit
SUXOS	senior UXO supervisor
SV	screening value
SVE	soil vapor extraction
SVOC	semivolatile organic compound
SW-846	U.S. EPA's *Test Methods for Evaluating Solid Waste: Physical/Chemical Methods*
SW	surface water
SWCC	State of Alabama Soil and Water Conservation Committee
SWMU	solid waste management unit
SWTR	surface water
SZ	support zone
TA	test area
TAL	target analyte list
TAT	turn around time
TB	trip blank
TBC	to be considered
TBD	to be determined
TCA	trichloroethane
TCDD	2,3,7,8-tetrachlorodibenzo-p-dioxin
TCDF	tetrachlorodibenzofurans
TCE	trichloroethene
TCH	thermal conductive heating
TCL	target compound list
TCLP	toxicity characteristic leaching procedure
TCMX	tetrachloro-m-xylene
TCRA	time critical removal action
TDGCL	thiodiglycol
TDGCLA	thiodiglycol chloroacetic acid
TDS	total dissolved solids
TEA	triethylaluminum
TEC	threshold effect concentration
TeCA	1,1,2,2-tetrachloroethane
TEMP	temperature
TEMTADS	Time-Domain Electromagnetic Multisensor Tower Array Detection System
TEQ	toxic equivalency quotient
TERC	Total Environmental Restoration Contract
Tetryl	trinitrophenylmethylnitramine
TEU	Technical Escort Unit
THI	target hazard index
Thiokol	Thiokol Corporation
TIC	tentatively identified compound
TIR	thermal infrared survey
TLV	threshold limit value
TM	Technical Manual
TMP	temperature measuring point
TMPW	temporary groundwater monitoring well
TN	Tennessee
TNB	trinitrobenzene
TNT	trinitrotoluene
TO	task order
TOC	use top of casing when defining the well depth; use total organic carbon when defining a general chemistry parameter
TOI	target of interest

List of Abbreviations and Acronyms
Redstone Arsenal, Madison County, Alabama

Acronym	Definition
TOW	tube-launched, optically-tracked, wire-guided missile
TP	Technical Paper
TPH	total petroleum hydrocarbon
TPI	three-phase inspection
TPP	Technical Project Planning
TR	target cancer risk
TRADOC	U.S. Army Training and Doctrine Command
TRPH	total recoverable petroleum hydrocarbons
TRV	toxicity reference value
TSA	temporary storage area
TSCA	Toxic Substances Control Act
TSCRN	top of screen
TSDF	treatment, storage, and disposal facility
TSLC	target soil leachate concentration
TSS	total suspended solids
TTAP	treatment system tap (port)
TTZ	target treatment zone
Tu	Tupelo silt loam
TVA	Tennessee Valley Authority
TWA	time-weighted average
TXDOT	Texas Department of Transportation
TX-3	small rocket motor used for ballistics testing
U	not detected above reporting limit
U.S.	United States (of America)
UB	potential blank contamination
UCL	upper confidence limit
UCR	upper certified range
UDMH	unsymmetrical dimethyl hydrazine
UF	uncertainty factor
UFP	Uniform Federal Policy
UIC	underground injection control
UJ	not detected, estimated due to data validation anomaly
UNEP	United Nations Environment Program
UPL	upper prediction limit; upland
UR	not detected; rejected due to data validation anomaly
URF	unit risk factor
USACE	U.S. Army Corps of Engineers
USACMLS	U.S. Army Chemical School
USAEC	U.S. Army Environmental Command
USAEHA	U.S. Army Environmental Hygiene Agency
USAESCH	U.S. Army Engineering Support Center, Huntsville
USAMPS	U.S. Army Military Police School
USAPHC	U.S. Army Public Health Command
USATCES	U.S. Army Technical Center for Explosive Safety
USATEU	U.S. Army Technical Escort Unit
USATHAMA	U.S. Army Toxic and Hazardous Material Agency
USC	United States Code
USCS	Unified Soil Classification System
USDA	U.S. Department of Agriculture
USEPA	U.S. Environmental Protection Agency
USFWS	U.S. Fish and Wildlife Service
USGS	U.S. Geological Survey
UST	underground storage tank
UTL	upper tolerance limit
UTM	Universal Transverse Mercatir
UTV	utility terrain vehicle
UXO	unexploded ordnance
UXOSP	unexploded ordnance sweep personnel
UXOQCS	UXO Quality Control Supervisor
UXOSO	UXO safety officer
V	vanadium
VC	vinyl chloride
VI	vapor intrusion
VISL	vapor intrusion screening level
VOA	volatile organic analyte
VOC	volatile organic compound
VOH	volatile organic hydrocarbon
VP	soil vapor point
VQ	validation qualifier
vs	versus
VSI	visual site inspection
VSL	vapor screening level
VSP	Visual Sample Plan
VX	nerve agent (O-ethyl-S-[diisopropylaminoethyl]-methylphosphonothiolate)
WAC	Women's Army Corps
WDTA	Waste Disposal Trench Area
WNWR	Wheeler National Wildlife Refuge

List of Abbreviations and Acronyms
Redstone Arsenal, Madison County, Alabama

Acronym	Definition
WOE	weight of evidence
WP	white phosphorus
WPL	worker population limit
WQC	water quality criteria
WRS	Wilcoxon rank sum
WS	watershed
WSA	Watershed Screening Assessment
WTP	water treatment plant
WWI	World War I
WWII	World War II
WWTP	wastewater treatment plant
X	Data collected in a manner that is now considered to be inconsistent with good scientific practice. These data are considered unusable. However, since these data exist in the database, additional definitive samples may be needed to verify the presence or absence of any positively detected result.
XRF	x-ray fluorescence
yd^3	cubic yards
ZVI	zero-valent iron

TABLES

Table 2-1

Conclusions of the ARBCA RM-2 Evaluation
MSFC-027
Redstone Arsenal, Madison County, Alabama

Receptors	Exposure to Soil [a]	Relevant COCs in Soil [b]	Exposure to Soil and Groundwater [a]	COCs for Exposure to Groundwater [c]
SOIL PILES				
Commercial Worker	X	Arsenic Aroclor 1260 TCDD-TEQ 4,4'-DDT	X	Mercury cis-1,2-Dichloroethene Trichloroethene
Construction Worker	√	(None)	X	Mercury cis-1,2-Dichloroethene Trichloroethene
Hypothetical Resident	X	Arsenic Aroclor 1254 Aroclor 1260 TCDD-TEQ 4,4'-DDD 4,4'-DDE 4,4'-DDT	X	Mercury cis-1,2-Dichloroethene Trichloroethene
REMAINDER OF SITE				
Commercial Worker	√	(None)	X	Mercury cis-1,2-Dichloroethene Trichloroethene
Construction Worker	√	(None)	X	Mercury cis-1,2-Dichloroethene Trichloroethene
Hypothetical Resident	√	(None)	X	Mercury cis-1,2-Dichloroethene Trichloroethene

Notes:
Taken from MSFC-027 RFI CB&I, 2014a).

√ Cumulative cancer risk and noncancer hazard were found to be acceptable.

X Cumulative cancer risk and/or noncancer hazard were found to be unacceptable.

[a] Risk conclusions exclude inorganics found to be naturally occurring.

[b] Conclusions regarding risk and identification of relevant COCs in soil exclude consideration of contribution of risk from exposure to groundwater.

[c] Chemicals with maximum detected concentrations below their maximum contaminant levels are not included as COCs from exposure to groundwater.

ARBCA - Alabama Risk-Based Corrective Action.
COC - Chemical of concern.
RM-2 - Risk-Management-2.
TCDD-TEQ - Tetrachlorodibenzo-p-dioxin toxic equivalent quotient.

Table 3-1

Soil Cleanup Goals
MSFC-027
Redstone Arsenal, Madison County, Alabama

COC	RC	Sum of IELCR	Target Risk	Residential CG [a] (mg/kg)
Arsenic	23	5.91E-05	NA	15/18*
Aroclor 1260	1.53	7.58E-06	2.50E-06	0.50
4,4'-DDD	3.5	2.83E-06	2.50E-06	3.09
4,4'-DDE	3.79	3.32E-06	2.50E-06	2.85
4,4'-DDT	18.1	1.37E-05	2.50E-06	3.30
		SUM	**1.00E-05**	

CG - Cleanup goal.
COC - Chemical of concern.
IELCR - Individual excess lifetime cancer risk.
mg/kg - Milligrams per kilogram.
NA - Not applicable.
RC - Representative concentration.
Sum of IELCR - Taken from Table D-27 for hypothetical resident (CB&I, 2014).
*CG for arsenic based on the background screening value for surface/subsurface soil.
[a] Residential CG based on achievement of target risk.

Table 4-1

Excavation Areas and Volumes
MSFC-027
Redstone Arsenal, Madison County, Alabama

Proposed Excavation Areas	Contaminated Zone above CGs (feet bgs)	Exceeds CG	Pile Height (feet)	Excavation Depth (feet bgs)	Length (feet)	Width (feet)	Area (square feet)	Volume (BCY)	Loose Volume (LCY) [a]
Soil Piles 1,2, and 3			4	1	100	80	8,000	1,481	1,926
E27-SO02	0 - 1	PCB	(Area excavated in Soil Pile 1 Removal)						
E27-SO05	0 - 1	PCB	(Area excavated in Soil Pile 2 Removal)						
E27-SO04	0 - 2	PCB		2 [b]	10	10	100	7	10
Soil Pile 4		None	5	0	120	45	5,400	1,000	1,300
Soil Pile 5		Pesticides	2	1	130	55	7,150	794	1,033
M2708-SB	0 - 1	Pesticide	(Area excavated in Soil Pile 5 Removal)						
Soil Pile 6			2.5	1	90	45	4,050	525	683
Shallow Soil Excavation									
E27-SB04	0 - 1	Pesticide/PCB	0	2	10	10	100	7	10
MSFC-027-SB021	0 - 1	Pesticide	0	2	10	10	100	7	10
E27-SB06/M2707-SB	0 - 1	Pesticide/PCB	0	2	15	10	150	11	14
Deep Soils									
MSFC-027-SB022	16 - 18	Arsenic	0	19	5	5	25	18	23
MSFC-027-SB023	16 -18	Arsenic	0	19	5	5	25	18	23
MSFC-027-SB024	6 - 8	Arsenic	0	9	5	5	25	8	11
MSFC-027-SB026	10 -18	Arsenic	0	19	5	5	25	18	23
MSFC-027-SB028	22 -24	Arsenic	0	25	5	5	25	23	30
							Totals	3,919	5,094

BCY - Bank cubic yards.
bgs - Below ground surface.
CG - Cleanup goal.
LCY - Loose cubic yards.
NA - Not applicable.
PCB - Polychlorinated biphenyl.

[a] Assume a factor of 1.3 to convert bank cubic yards to loose cubic yards.
[b] Excavation to 1 foot bgs performed during soil pile removal. Additional 2 feet to be excavated for total of 3 feet bgs.

FIGURES

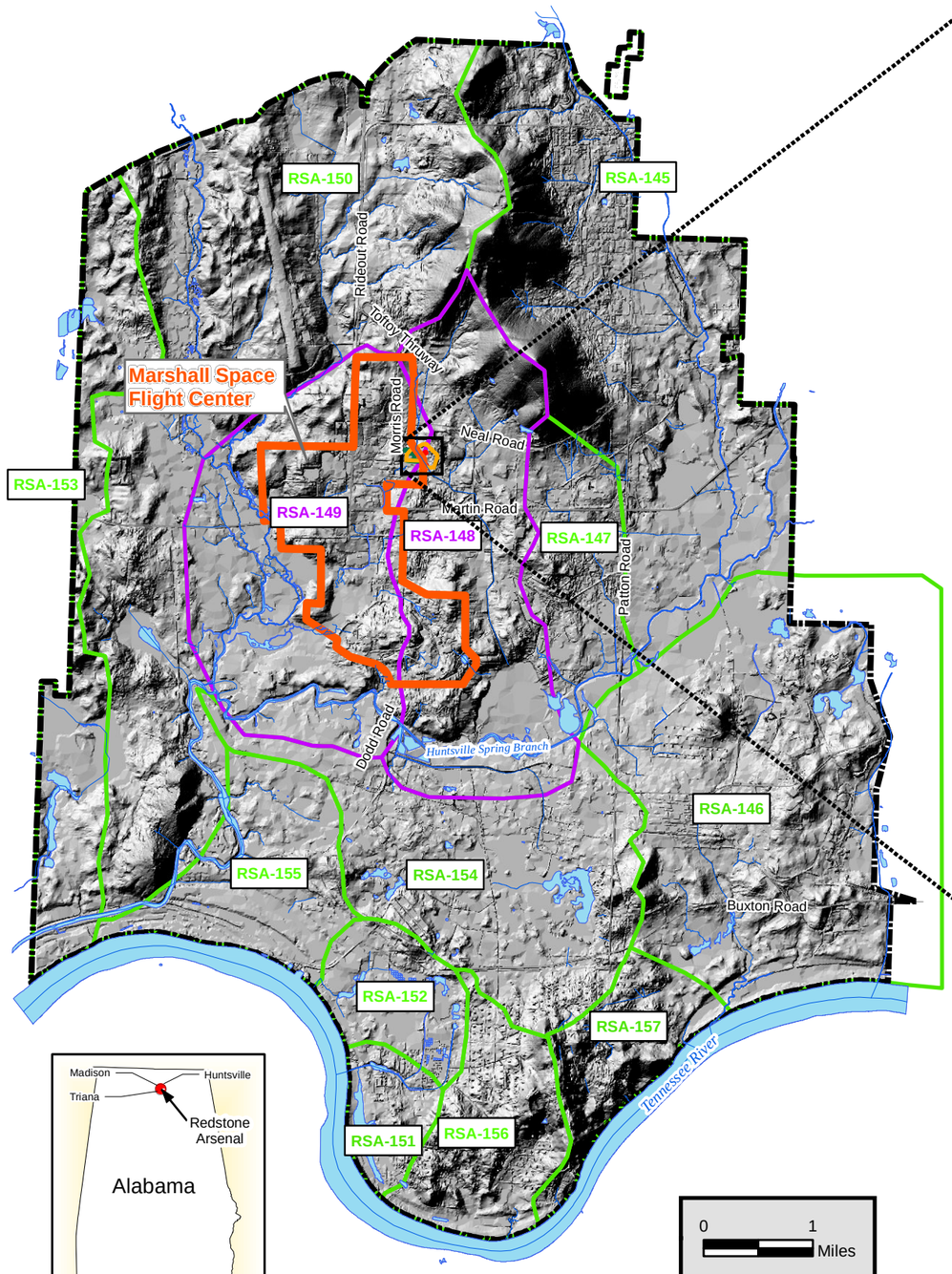

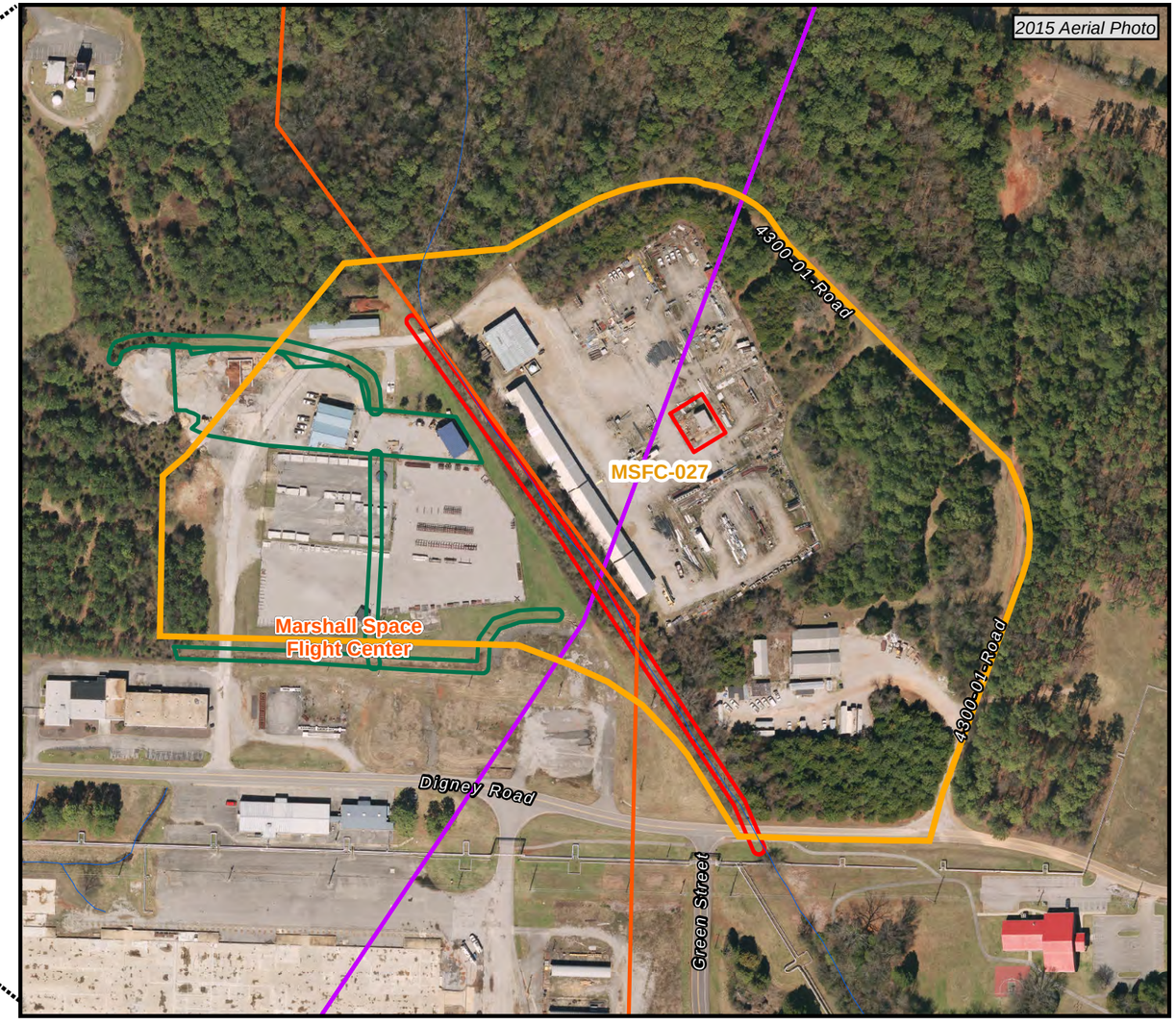

Legend

- MSFC-027 Site Boundary
- MSFC Property Area
- MSFC-081 Site Boundary
- MSFC-083 Site Boundary
- RSA-148 and RSA-149 Groundwater Unit Boundaries
- Groundwater Unit Boundaries
- RSA Installation Boundary
- Water Bodies
- Surface Drainage Features (Some Ephemeral)
- Roads

Figure 1-1

MSFC-027
Site Location Map

Redstone Arsenal
Madison County, Alabama
Contract No. W91ZLK-09-D-0006

1 inch = 250 feet

0 125 250 Feet

NAD 1983 State Plane Alabama East Feet

CB&I Federal Services LLC

H:\Redstone\GIS_Documents\Project_maps\MSFC_027\MSFC_027_CMIP_Dec2015\MSFC_027_Site_Location_Map.mxd

Figure 1-2

MSFC-027
Soil Piles Site Map

Redstone Arsenal
Madison County, Alabama
Contract No. W91ZLK-09-D-0006

H:\Redstone\GIS_Documents\Project_maps\MSFC_027\MSFC_027_CMIP_Dec2015\MSFC_027_Soil_Piles_Site_Map.mxd

ABBREVIATIONS and NOTES:
ft bgs - feet below ground surface
COCs - contaminants of concern
mg/kg - milligrams per kilogram

Pesticides
DDE - dichlorodiphenyldichloroethylene
DDD - dichlorodiphenyldichloroethane
DDT - dichlorodiphenyltrichloroethane
PCB - polychlorinated biphenyl
Aroclor 1260

Residential Cleanup Goals for COCs

Aroclor 1260	0.5 mg/kg
4,4'-DDD	3.09 mg/kg
4,4'-DDE	2.85 mg/kg
4,4'-DDT	3.30 mg/kg
Arsenic (0-1 ft bgs)	15 mg/kg
Arsenic (> 1 ft bgs)	18 mg/kg

Depth is ft bgs.
Results are in mg/kg.

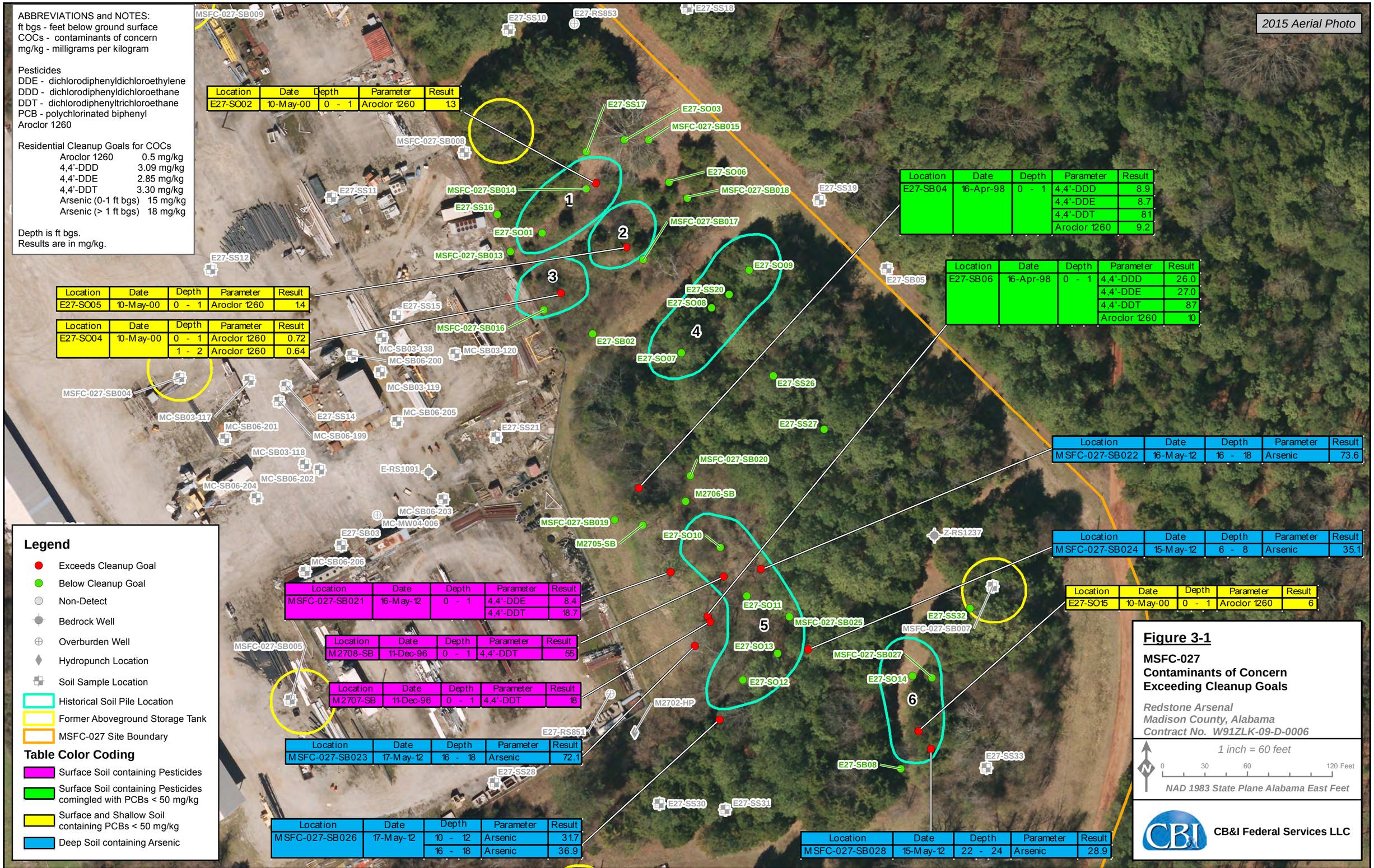

Location	Date	Depth	Parameter	Result
E27-SO02	10-May-00	0 - 1	Aroclor 1260	1.3

Location	Date	Depth	Parameter	Result
E27-SO05	10-May-00	0 - 1	Aroclor 1260	1.4

Location	Date	Depth	Parameter	Result
E27-SO04	10-May-00	0 - 1	Aroclor 1260	0.72
		1 - 2	Aroclor 1260	0.64

Location	Date	Depth	Parameter	Result
E27-SB04	16-Apr-98	0 - 1	4,4'-DDD	8.9
			4,4'-DDE	8.7
			4,4'-DDT	81
			Aroclor 1260	9.2

Location	Date	Depth	Parameter	Result
E27-SB06	16-Apr-98	0 - 1	4,4'-DDD	26.0
			4,4'-DDE	27.0
			4,4'-DDT	87
			Aroclor 1260	10

Location	Date	Depth	Parameter	Result
MSFC-027-SB022	16-May-12	16 - 18	Arsenic	73.6

Location	Date	Depth	Parameter	Result
MSFC-027-SB024	15-May-12	6 - 8	Arsenic	35.1

Location	Date	Depth	Parameter	Result
E27-SO15	10-May-00	0 - 1	Aroclor 1260	6

Location	Date	Depth	Parameter	Result
MSFC-027-SB021	16-May-12	0 - 1	4,4'-DDE	8.4
			4,4'-DDT	18.7

Location	Date	Depth	Parameter	Result
M2708-SB	11-Dec-96	0 - 1	4,4'-DDT	55

Location	Date	Depth	Parameter	Result
M2707-SB	11-Dec-96	0 - 1	4,4'-DDT	18

Location	Date	Depth	Parameter	Result
MSFC-027-SB023	17-May-12	16 - 18	Arsenic	72.1

Location	Date	Depth	Parameter	Result
MSFC-027-SB026	17-May-12	10 - 12	Arsenic	31.7
		16 - 18	Arsenic	36.9

Location	Date	Depth	Parameter	Result
MSFC-027-SB028	15-May-12	22 - 24	Arsenic	28.9

Figure 3-1

MSFC-027
Contaminants of Concern
Exceeding Cleanup Goals

Redstone Arsenal
Madison County, Alabama
Contract No. W91ZLK-09-D-0006

H:\Redstone\GIS_Documents\Project_maps\MSFC_027\MSFC_027_CMIP_Dec2015\MSFC_027_COC_Exceeding_Cleanup_Goals.mxd

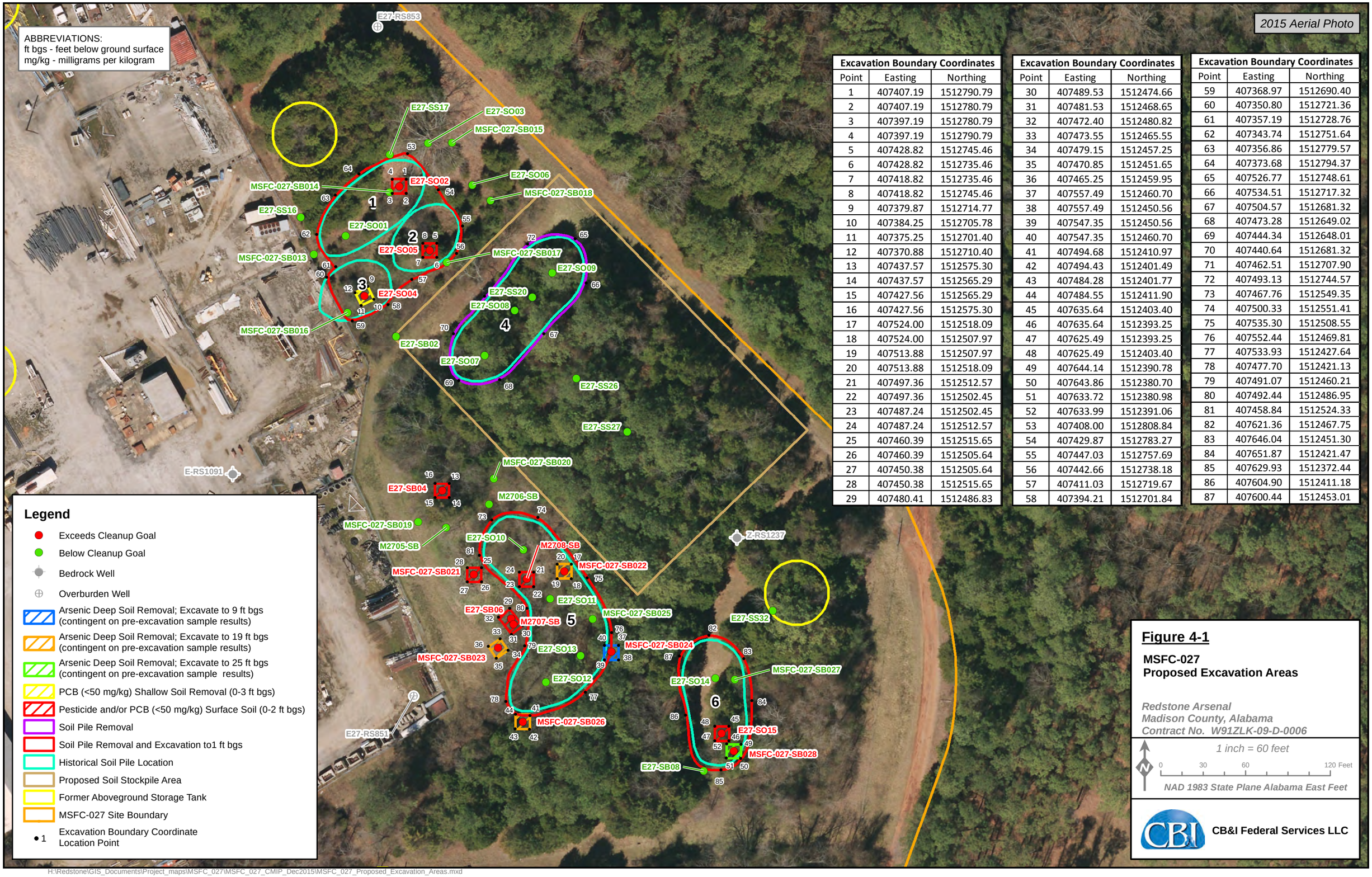

Excavation Boundary Coordinates		
Point	Easting	Northing
1	407407.19	1512790.79
2	407407.19	1512780.79
3	407397.19	1512780.79
4	407397.19	1512790.79
5	407428.82	1512745.46
6	407428.82	1512735.46
7	407418.82	1512735.46
8	407418.82	1512745.46
9	407379.87	1512714.77
10	407384.25	1512705.78
11	407375.25	1512701.40
12	407370.88	1512710.40
13	407437.57	1512575.30
14	407437.57	1512565.29
15	407427.56	1512565.29
16	407427.56	1512575.30
17	407524.00	1512518.09
18	407524.00	1512507.97
19	407513.88	1512507.97
20	407513.88	1512518.09
21	407497.36	1512512.57
22	407497.36	1512502.45
23	407487.24	1512502.45
24	407487.24	1512512.57
25	407460.39	1512515.65
26	407460.39	1512505.64
27	407450.38	1512505.64
28	407450.38	1512515.65
29	407480.41	1512486.83

Excavation Boundary Coordinates		
Point	Easting	Northing
30	407489.53	1512474.66
31	407481.53	1512468.65
32	407472.40	1512480.82
33	407473.55	1512465.55
34	407479.15	1512457.25
35	407470.85	1512451.65
36	407465.25	1512459.95
37	407557.49	1512460.70
38	407557.49	1512450.56
39	407547.35	1512450.56
40	407547.35	1512460.70
41	407494.68	1512410.97
42	407494.43	1512401.49
43	407484.28	1512401.77
44	407484.55	1512411.90
45	407635.64	1512403.40
46	407635.64	1512393.25
47	407625.49	1512393.25
48	407625.49	1512403.40
49	407644.14	1512390.78
50	407643.86	1512380.70
51	407633.72	1512380.98
52	407633.99	1512391.06
53	407408.00	1512808.84
54	407429.87	1512783.27
55	407447.03	1512757.69
56	407442.66	1512738.18
57	407411.03	1512719.67
58	407394.21	1512701.84

Excavation Boundary Coordinates		
Point	Easting	Northing
59	407368.97	1512690.40
60	407350.80	1512721.36
61	407357.19	1512728.76
62	407343.74	1512751.64
63	407356.86	1512779.57
64	407373.68	1512794.37
65	407526.77	1512748.61
66	407534.51	1512717.32
67	407504.57	1512681.32
68	407473.28	1512649.02
69	407444.34	1512648.01
70	407440.64	1512681.32
71	407462.51	1512707.90
72	407493.13	1512744.57
73	407467.76	1512549.35
74	407500.33	1512551.41
75	407535.30	1512508.55
76	407552.44	1512469.81
77	407533.93	1512427.64
78	407477.70	1512421.13
79	407491.07	1512460.21
80	407492.44	1512486.95
81	407458.84	1512524.33
82	407621.36	1512467.75
83	407646.04	1512451.30
84	407651.87	1512421.47
85	407629.93	1512372.44
86	407604.90	1512411.18
87	407600.44	1512453.01

H:\Redstone\GIS_Documents\Project_maps\MSFC_027\MSFC_027_CMIP_Dec2015\MSFC_027_Proposed_Excavation_Areas.mxd

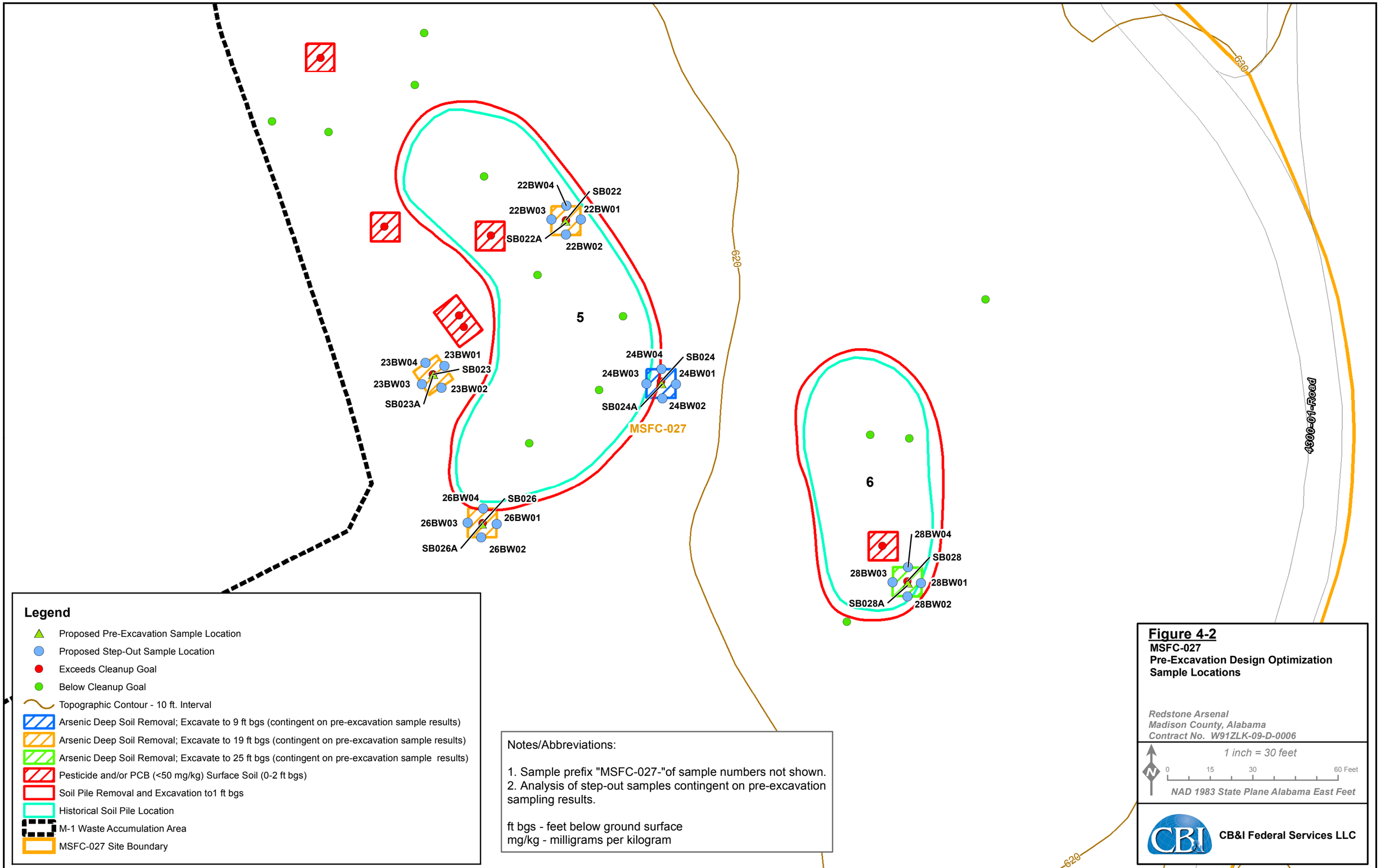

H:\Redstone\GIS_Documents\Project_maps\MSFC_027\MSFC_027_CMIP_Dec2015\MSFC_027_PreExcavation_Contingency_Soil_Borings_South_Soil_Piles.mxd

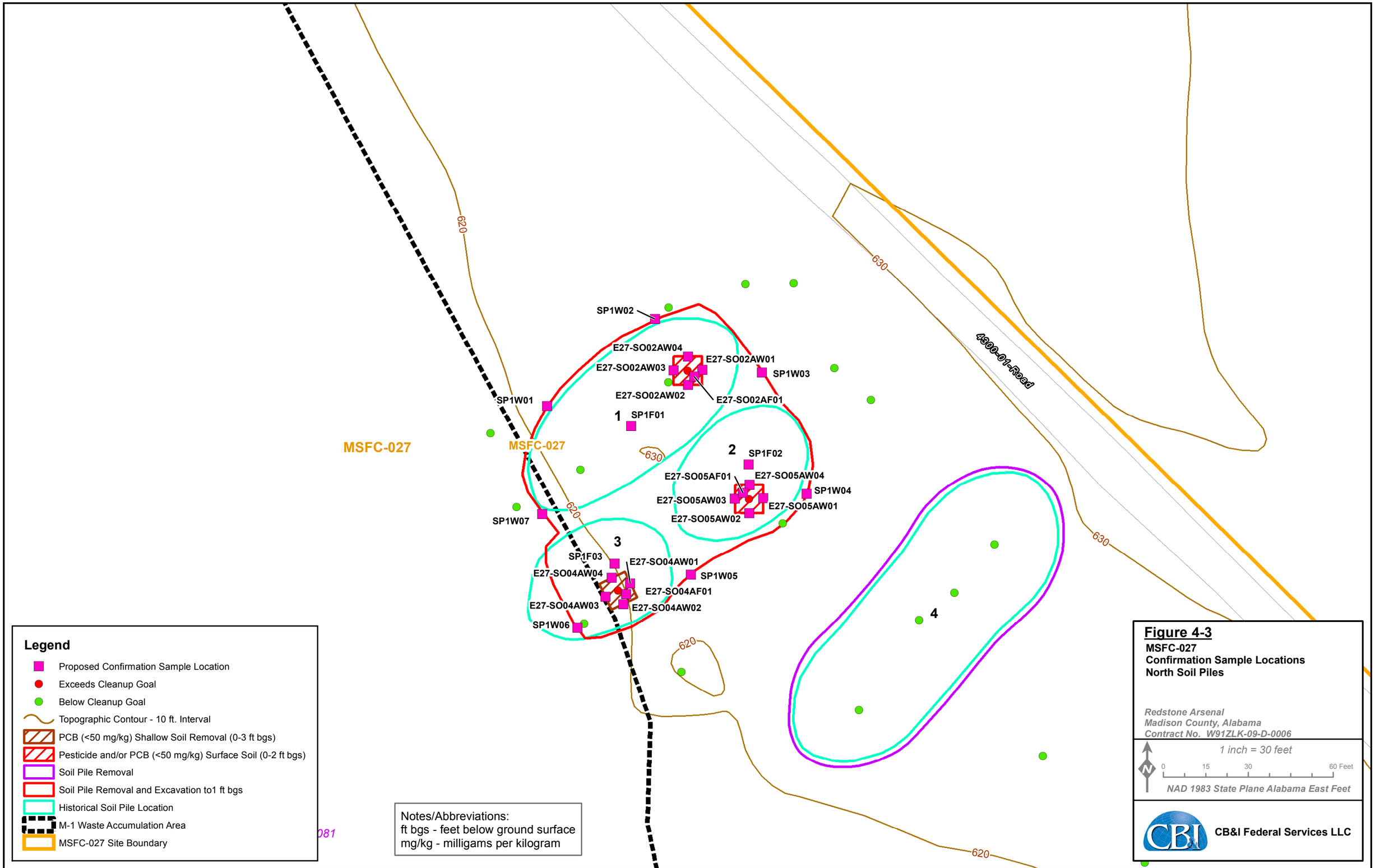
MSFC-027
MSFC-027
620
630
4300-01-Road
SP1W01
SP1W02
SP1W03
SP1W04
SP1W05
SP1W06
SP1W07
E27-SO02AW04
E27-SO02AW01
E27-SO02AW03
E27-SO02AW02
E27-SO02AF01
1
SP1F01
2
SP1F02
E27-SO05AF01
E27-SO05AW04
E27-SO05AW03
E27-SO05AW01
E27-SO05AW02
3
SP1F03
E27-SO04AW01
E27-SO04AW04
E27-SO04AF01
E27-SO04AW03
E27-SO04AW02
4
Legend
Proposed Confirmation Sample Location
Exceeds Cleanup Goal
Below Cleanup Goal
Topographic Contour - 10 ft. Interval
PCB (<50 mg/kg) Shallow Soil Removal (0-3 ft bgs)
Pesticide and/or PCB (<50 mg/kg) Surface Soil (0-2 ft bgs)
Soil Pile Removal
Soil Pile Removal and Excavation to1 ft bgs
Historical Soil Pile Location
M-1 Waste Accumulation Area
MSFC-027 Site Boundary
Notes/Abbreviations:
ft bgs - feet below ground surface
mg/kg - milligams per kilogram
Figure 4-3
MSFC-027
Confirmation Sample Locations
North Soil Piles
Redstone Arsenal
Madison County, Alabama
Contract No. W91ZLK-09-D-0006
1 inch = 30 feet
0 15 30 60 Feet
NAD 1983 State Plane Alabama East Feet
CB&I Federal Services LLC
H:\Redstone\GIS_Documents\Project_maps\MSFC_027\MSFC_027_CMIP_Dec2015\MSFC_027_Confirmation_Sample_Loc_North_Soil_Piles.mxd

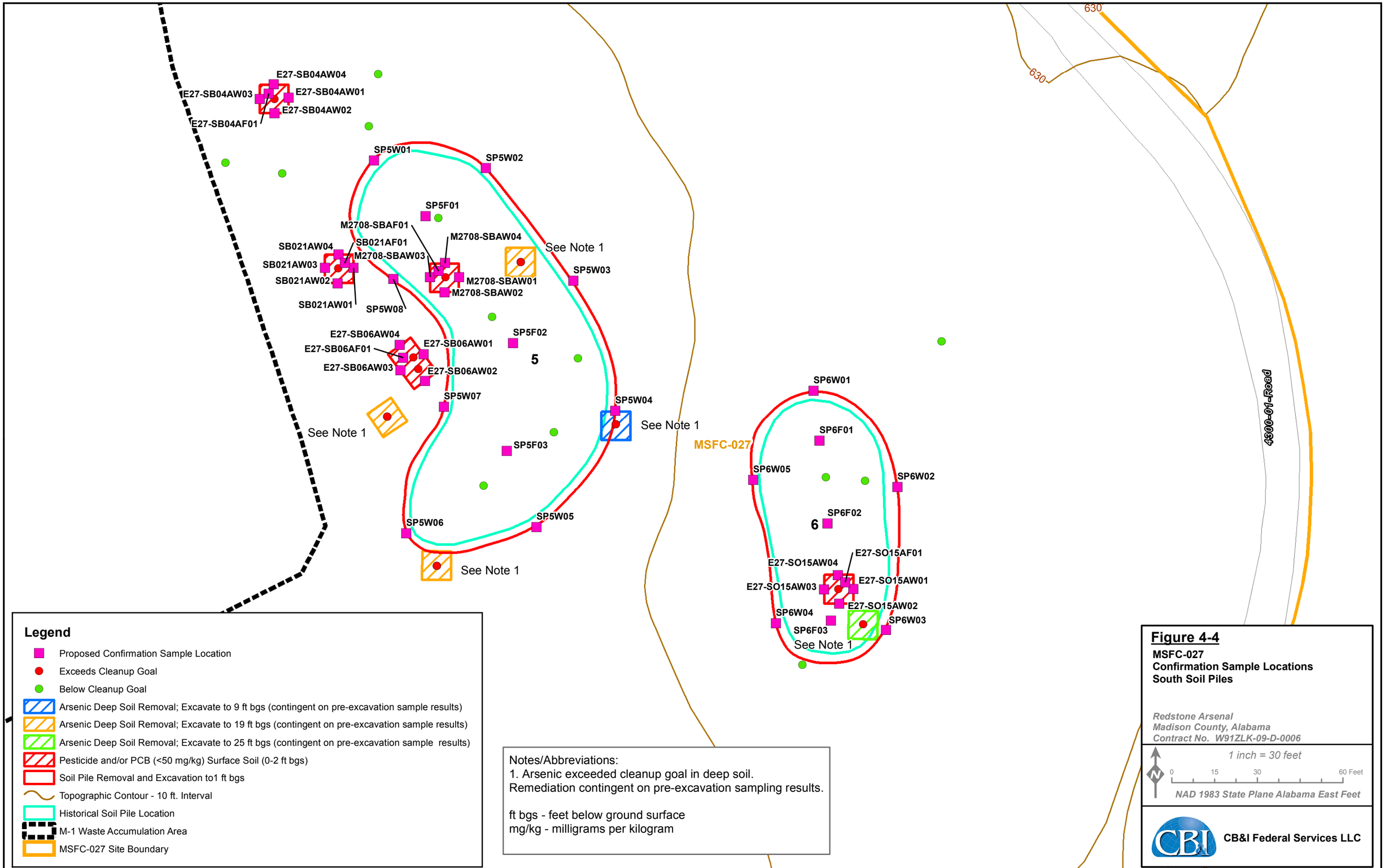

Legend

- Proposed Confirmation Sample Location
- Exceeds Cleanup Goal
- Below Cleanup Goal
- Arsenic Deep Soil Removal; Excavate to 9 ft bgs (contingent on pre-excavation sample results)
- Arsenic Deep Soil Removal; Excavate to 19 ft bgs (contingent on pre-excavation sample results)
- Arsenic Deep Soil Removal; Excavate to 25 ft bgs (contingent on pre-excavation sample results)
- Pesticide and/or PCB (<50 mg/kg) Surface Soil (0-2 ft bgs)
- Soil Pile Removal and Excavation to1 ft bgs
- Topographic Contour - 10 ft. Interval
- Historical Soil Pile Location
- M-1 Waste Accumulation Area
- MSFC-027 Site Boundary

Notes/Abbreviations:
1. Arsenic exceeded cleanup goal in deep soil.
Remediation contingent on pre-excavation sampling results.

ft bgs - feet below ground surface
mg/kg - milligrams per kilogram

Figure 4-4
MSFC-027
Confirmation Sample Locations
South Soil Piles

Redstone Arsenal
Madison County, Alabama
Contract No. W91ZLK-09-D-0006

1 inch = 30 feet
0 15 30 60 Feet
NAD 1983 State Plane Alabama East Feet

CB&I Federal Services LLC

H:\Redstone\GIS_Documents\Project_maps\MSFC_027\MSFC_027_CMIP_Dec2015\MSFC_027_Confirmation_Sample_Loc_South_Soil_Piles.mxd

APPENDIX A

REDSTONE RCRA PERMIT MODIFICATION REQUEST

REQUEST FOR PERMIT MODIFICATION FOR MSFC-027, INACTIVE WASTE ACCUMULATION AREA OPERABLE UNIT 18 U.S. ARMY GARRISON – REDSTONE MADISON COUNTY, ALABAMA APRIL 2016

1.0 Introduction

As specified in Section VI.E.3 of the U.S. Army Garrison – Redstone Arsenal's Alabama Hazardous Wastes Management and Minimization Act Hazardous Waste Storage Facility, Thermal Treatment, Solid Waste Management Unit Corrective Action Permit, Modification No. 6 (last modified on July 6, 2015) (hereinafter referred to as the Permit) (Alabama Department of Environmental Management [ADEM], 2015), a request for permit modification is to be submitted along with a corrective measures implementation (CMI) work plan. The U.S. Army Garrison–Redstone (Army) has been directed to include this request for permit modification in an appendix to the CMI work plan. Therefore, this request for modification to the Permit has been prepared for Solid Waste Management Unit MSFC-027, Inactive Waste Accumulation Area, Operable Unit 18, at Redstone Arsenal (RSA) in Madison County, Alabama. ADEM provided concurrence on the Resource Conservation and Recovery Act (RCRA) facility investigation (RFI) report (CB&I Federal Services LLC [CB&I], 2014) on August 25, 2014. The Army has prepared the CMI work plan and is ready to implement corrective measures for soil at MSFC-027.

As part of the RFI report, the Army requested that ADEM move MSFC-027 from Table VI.2 to Table VI.6 in the Permit and list it as requiring corrective measures for soil/surface media and no further action for groundwater associated with MSFC-027. Any potential actions concerning groundwater beneath MSFC-027 will be addressed as part of the George C. Marshall Space Flight Center (MSFC) Operable Unit 3 groundwater investigation. This move will occur as part of the next permit modification. As specified in Section VI.E.3 of the Permit, this request for permit modification will serve to incorporate the proposed corrective measures, including all procedures necessary to implement and monitor the final corrective measures for this site, into the Permit in accordance with Alabama Administrative Code R. 335-14-8-.04(2).

2.0 Facility and Site Description

RSA is located in the southwestern portion of Madison County, which is in the northern portion of Alabama. RSA is a U.S. Army facility that encompasses approximately 38,300 acres of land, all of which are either owned or controlled by the Army (Figure 2-1).

MSFC-027 currently occupies approximately 24 acres in the central portion of RSA, with 8 acres within the National Aeronautics and Space Administration (NASA) MSFC boundary (Figure 2-1). The site lies above the RSA-148 and RSA-149 groundwater units. When initially designated as the M-1 Waste Accumulation Area, the site occupied approximately 4 acres surrounded by a chain-link fence and paved with gravel and asphalt (A. T. Kearney, Inc., 1989; Geraghty & Miller, Inc. [G&M], 1991) (Figure 2-2).

The site contains buildings, open storage areas, paved asphalt roadways, wooded areas, and maintained grass. Originally, this area was utilized for bulk aboveground storage of fuel oil and ethanol, supporting the production of ethylene gas in the manufacturing of the chemical agent mustard in 1943. These storage tanks were removed between 1956 and 1959. In the late 1950s through the early 1960s, missile component testing was conducted in the eastern portion of the site by the Army. In July 1960, the Army granted use and occupancy to NASA. Two NASA responsible sites, including MSFC-081 (Paint Spray Booth) and MSFC-083 (Groundskeeper/ Future Area Building 4348) are wholly (MSFC-081) or partially (MSFC-083) located within the MSFC-027 boundary. These sites are currently being investigated by NASA in compliance with the Comprehensive Environmental Response, Compensation, and Liability Act.

Waste accumulation and storage by the Army and NASA began between 1961 and 1964, based on aerial photographs (CB&I, 2014) and documentation (A.T. Kearney, Inc., 1989; G&M, 1991). This section of the site was utilized as an accumulation area for wastes generated primarily by maintenance activities, including the storage of scrap metal, waste oils, solvents, sludge, and soil piles suspected to have been composed of sewage sludge. The soil associated with the soil piles was placed on the existing grade. The locations of the soil piles, labeled 1 through 6, are shown on Figure 2-2. The site operated as a waste accumulation area from the 1960s to 1987. ADEM inspected the site in July 1986 and noted no violations or hazardous waste activities in the area. The site is no longer used for waste accumulation but remains active as an equipment and materials storage yard for MSFC.

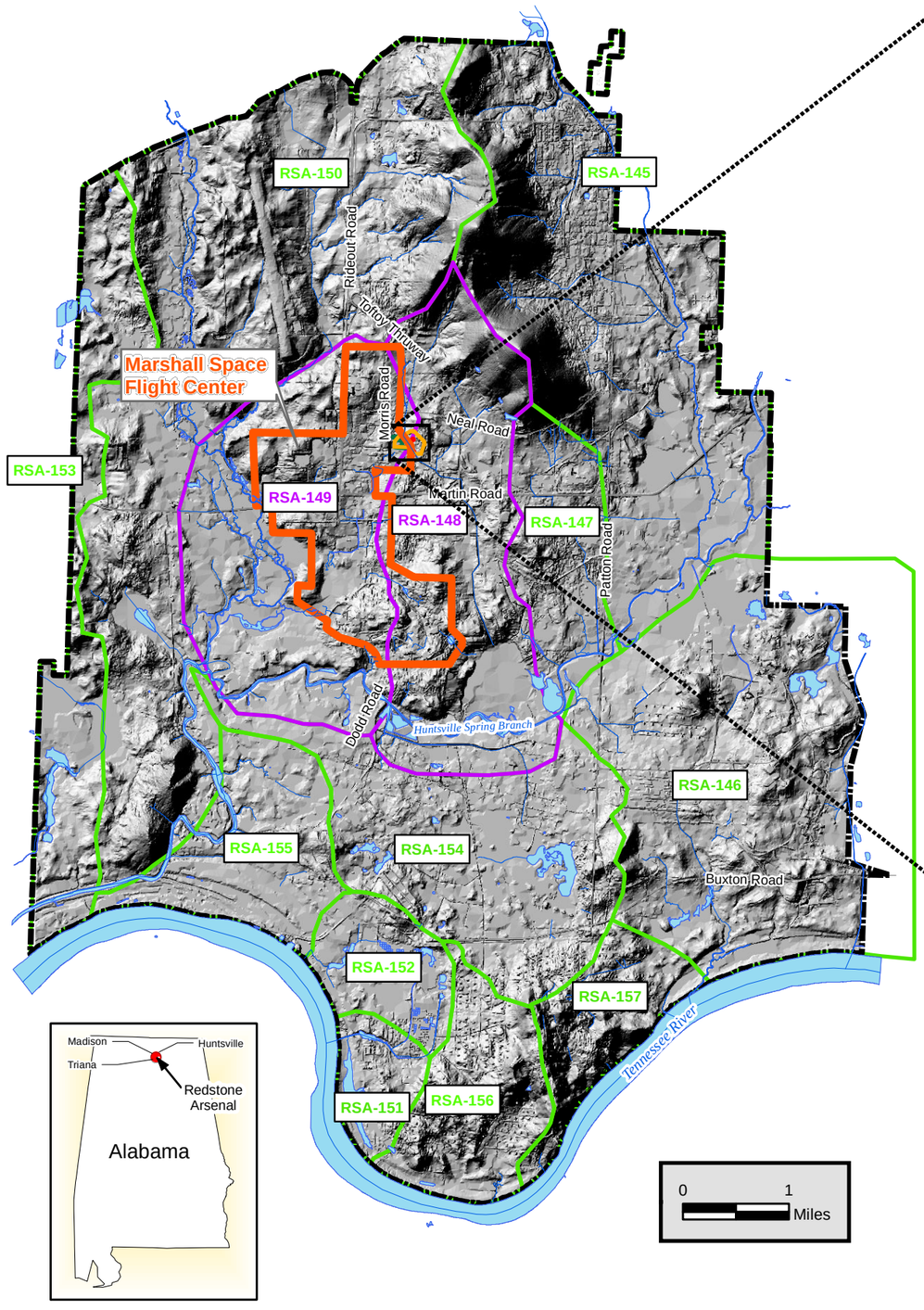

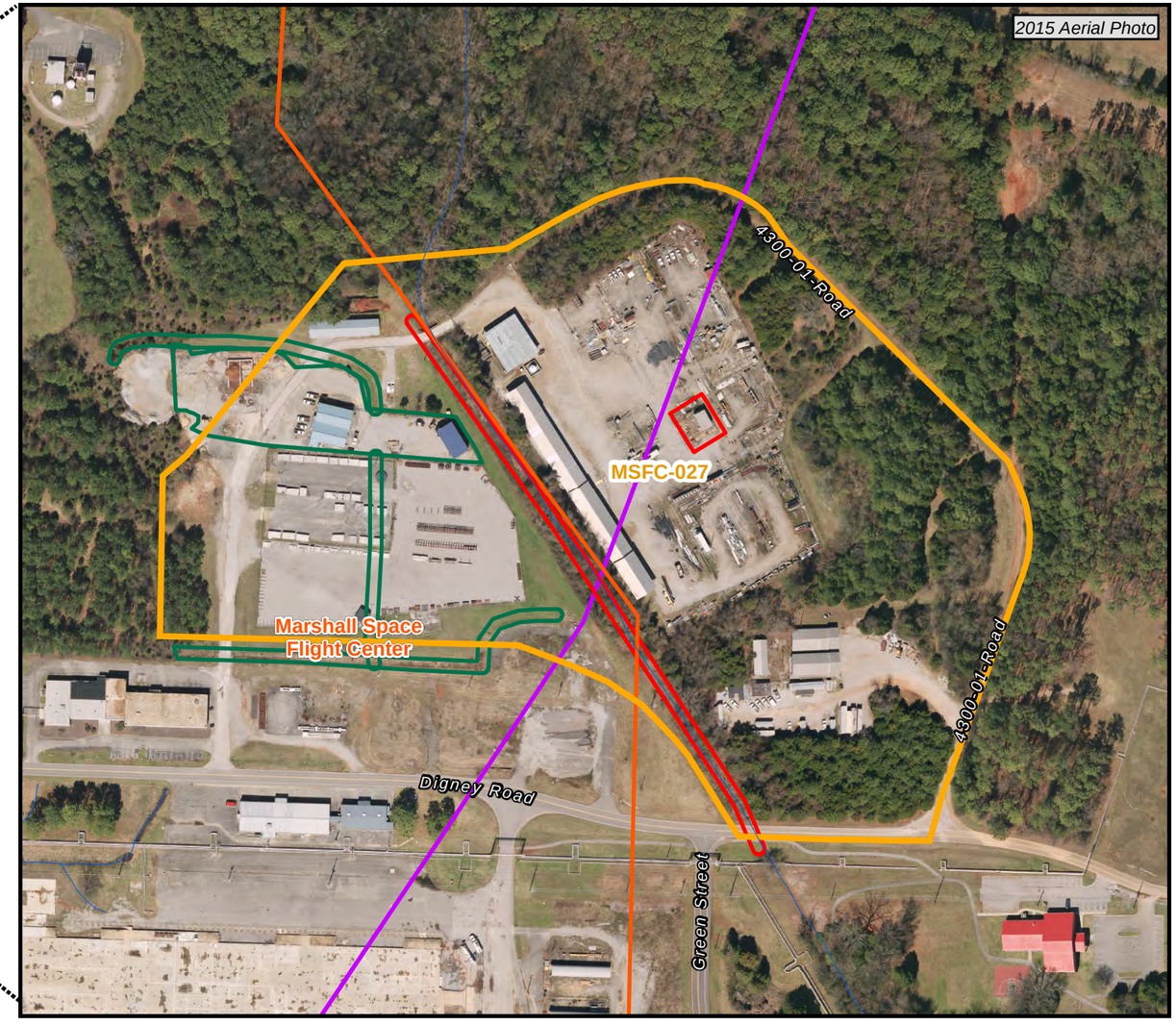

Legend

- MSFC-027 Site Boundary
- MSFC Property Area
- MSFC-081 Site Boundary
- MSFC-083 Site Boundary
- RSA-148 and RSA-149 Groundwater Unit Boundaries
- Groundwater Unit Boundaries
- RSA Installation Boundary
- Water Bodies
- Surface Drainage Features (Some Ephemeral)
- Roads

Figure 2-1

MSFC-027
Site Location Map

Redstone Arsenal
Madison County, Alabama
Contract No. W91ZLK-09-D-0006

1 inch = 250 feet

0 125 250 Feet

NAD 1983 State Plane Alabama East Feet

CB&I Federal Services LLC

H:\Redstone\GIS_Documents\Project_maps\MSFC_027\MSFC_027_CMIP_Dec2015\MSFC_027_Site_Location_Map.mxd

H:\Redstone\GIS_Documents\Project_maps\MSFC_027\MSFC_027_CMIP_Dec2015\MSFC_027_Soil_Piles_Site_Map.mxd

3.0 Investigative History

Environmental investigations conducted at MSFC-027 included the following:

- MSFC-027 interim RCRA facility assessment (A.T. Kearney, Inc., 1989)
- MSFC-027 visual site inspection (VSI) (G&M, 1991)
- MSFC-027 site screening remedial investigation (Rust Environmental and Infrastructure, Inc., 1998)
- MSFC-027 interim report of findings (IT Corporation [IT], 1999a)
- MSFC-027 action memorandum (IT, 1999b)
- RCRA facility assessment (ADEM, 2008a)
- MSFC-027 RFI (Shaw Environmental, Inc. [Shaw], 2011; 2012,a,b; CB&I, 2014).

The investigations and reports completed at the MSFC-027 soil piles include the MSFC-027 interim report of findings (IT, 1999a), MSFC-027 action memorandum (IT, 1999b), RSA RCRA facility assessment (ADEM, 2008a), and Phase I, II, and III of the RFI (CB&I, 2014). A summary of these investigations follows. The MSFC-027 RFI report (CB&I, 2014) provides a summary of all of the investigations conducted at the site.

Recommendations from the 1998 investigation included removal of the soil piles and collection of samples from within the soil piles for additional characterization and determination of soil disposal options **(**IT, 1999a). A subsequent memorandum proposed collecting soil samples to further delineate the extent of contamination and removal of the soil piles (IT, 1999b). Analyses from subsequent sampling of the soil piles (surface and subsurface soil samples) were collected in year 2000 for characterization and waste disposal. The results indicated that contaminant concentrations were much lower than expected and concentrations were below the preliminary remediation goals developed for an industrial worker at the site. Therefore, the removal action was deemed unnecessary.

ADEM evaluated MSFC-027 during a 2008 VSI conducted as part of the RSA RCRA facility assessment (ADEM, 2008a). Findings of the assessment indicated that based on previous investigations, the unit history, and the current findings of the VSI, the probability of releases from MSFC-027 to soils is high and the probability of releases to all other environmental pathways is low. It was recommended that the Army proceed with further investigation at MSFC-027.

The MSFC-027 RFI was designed to collect and evaluate the data needed to characterize the nature and extent of contaminant releases identified during previous investigations. The first phase of the RFI identified data gaps with respect to vertical and lateral delineation of pesticides, polychlorinated biphenyls (PCB), and metals in soil associated with the previously identified soil piles. In May 2012, as part of the second phase of the RFI, soil sampling of the piles was conducted. The RFI concluded the piles contained arsenic, PCBs, and DDT (e.g. pesticide) residues and daughter products that may pose an unacceptable health risk to commercial/ industrial or residential receptors from exposure to soils in the piles. The RFI also concluded that constituents in surface soil associated with the identified soil piles have the potential to pose a threat to ecological receptors. The RFI recommended development of corrective measures for the soil piles.

4.0 Scope of the Corrective Measures for MSFC-027

The scope covered by the corrective measures at MSFC-027 is surface media.

Exposure to MSFC-027 surface media poses no leaching threat to groundwater; however, arsenic, Aroclor 1260, 4,4'-DDT, 4,4'-DDE, and 4,4'-DDD in surface and subsurface soil at the site pose an unacceptable health risk to the hypothetical residential receptor (CB&I, 2014). Arsenic also poses an unacceptable risk for a commercial worker and a potential for impacts to localized community-level receptors (plants). Thus, the Army has elected to perform corrective measures to remove and dispose of contaminated soils at the site to address this problem and avoid implementing unnecessary land-use controls to restrict future residential use of MSFC-027. The corrective measures are intended as the final action for surface media, and the Army's goal is to achieve unrestricted use of the site after corrective measures implementation. No further action is expected to be required for surface media at this site following the corrective measures because any unacceptable human health threat or potential for impact to localized community-level receptors (plants) would be permanently reduced or eliminated.

Groundwater beneath MSFC-027 may pose an unacceptable health risk to commercial/industrial or residential receptors from direct exposure to mercury, cis-1,2-dichloroethene, and trichloroethene (TCE) in groundwater developed as a potable source. TCE and its breakdown products in groundwater appear to have originated from releases that occurred during operations conducted by MSFC. Any actions necessary for groundwater beneath MSFC-027 will be addressed as part of the MSFC Operable Unit (OU) 3 groundwater unit investigation, and therefore, groundwater is not addressed further in this CMIP.

5.0 Site Characteristics

The topography of the site is relatively flat, with the topographically high area to the west-northwest, generally sloping to the east-southeast. An unnamed ephemeral storm water drainage feature (ditch) bisects the site, entering on the northern boundary and exiting the southern boundary.

Lithologic logs from soil and well borings at MSFC-027 indicate that native soils consist of predominantly medium- to high-plasticity clay, with trace to small amounts of silt and fine-grained sand. Based on auger refusal, thickness of the residual soils (overburden) ranges from approximately 21.5 feet (MSFC-027-SB024) to 51 (E27-RS853) feet. Chert and limestone fragments in the clay matrix are residual from weathering of the cherty limestone bedrock. The amount of residual material increases with depth, and a zone containing abundant residual chert fragments is found just above bedrock.

Lithologic data from bedrock wells installed across this portion of RSA indicate that the shallow bedrock first encountered correlates with the middle to upper Tuscumbia Limestone and exhibits well-developed karst features. The Tuscumbia Limestone beneath this area is characterized by thinly bedded to massive, fine to medium crystalline, stylolitic limestone with numerous chert nodules and chert lenses.

The average depth to groundwater from overburden monitoring wells (E27-RS849, E27-RS851, E27-RS853, MC-MW04-006, and E-RS 1085) adjacent to the soil piles is 24 to 40 feet below ground surface. Depth to groundwater increases from south of the soil piles to north of the soil piles (i.e., 24 to 40 feet below ground surface) (CB&I, 2014). Regional overburden groundwater has been recorded to flow generally to the south (CB&I, 2015a); however, July 2011 site-specific elevation data and spring 2011 data (NASA, 2012) indicate a radial flow from E27-RS851 and MC-MW04-006, respectively, with a component to the west-northwest towards E27-RS1073, MC-MW04-007, and E27-RS850.

A conceptual site model (CSM) was developed for MSFC-027 based on historical operations, available site information, and available soil and groundwater data. The most likely potential contaminants from the multiple uses which have occurred at MSFC-027 include volatile organic compounds (VOC), semivolatile organic compounds (SVOC), kerosene, unsymmetrical dimethyl hydrazine (UDMH), pesticides, PCBs, and metals. Primary potential release points and sources investigated at MSFC-027 include the following:

- Potential release of VOCs and SVOCs from the former aboveground storage tanks and related features (e.g., former fuel oil pump house) on site from 1943 through the late 1950s to impact surface and subsurface soil and groundwater.
- Activities associated with the former liquid oxygen fueling test stand (Building 353A/4350) in the extreme western portion of the site from the mid-1950s to the early 1960s included the following allowable materials: kerosene, alcohol/water, and liquid oxygen. Additionally UDMH was documented to have been approved for use for fuel ignition, but with restrictions.
- Potential release of VOCs, SVOCs, metals, pesticides, and PCBs from waste accumulation activities (including soil piles) conducted from the early-mid-1960s to approximately 1987 to impact surface and subsurface soil and groundwater.
- Army activities associated with emplacing missiles on launchers and missile component testing in the eastern portion of the site; however, there is no record of solvent use or engine testing conducted in the area.

Constituents associated with NASA-responsible sites MSFC-081 (active sandblasting and paint spray booth) and MSFC-083 (current groundskeeper and future area Building 4348) with the potential to impact surface and subsurface soil and groundwater include VOCs, SVOCs, and metals and VOCs, SVOCs, and pesticides, respectively. Contaminants associated with these sites either wholly or partially within the MSFC-027 site boundary will be addressed by NASA in accordance with the November 1994 Memorandum of Agreement between the U.S. Army Missile Command and MSFC and Amendments 1 and 2, dated April 2002 and February 2005, respectively.

6.0 Investigative Results

The MSFC-027 data set includes definitive and usable analytical results from 105 surface soil samples, 265 subsurface soil samples, 14 groundwater samples, and from 15 screening-level groundwater samples (Figure 6-1). Soil and groundwater sample analyses included VOCs, SVOCs (including low-level polynuclear aromatic hydrocarbons [PAH]), pesticides, PCBs, and metals. Perchlorate, although not included within the MSFC-027 CSM, was analyzed in selected groundwater samples as part of an installation-wide event.

The nature and extent of contamination at MSFC-027 has been defined and indicates the following:

- Four metals in surface soil and two in subsurface soil associated with on-site soil piles exceeded screening levels were determined not to be related to naturally occurring background. All other detected metals in soil either did not exceed screening levels or were determined to be naturally occurring based on the site-to-background evaluation. One detection of mercury in groundwater was determined to be anomalously high in the site-to-background evaluation.
- Perchlorate, although not included in the MSFC-027 CSM, was analyzed for in four monitoring wells as part of installation-wide groundwater assessments; concentrations did not exceed groundwater screening values.
- Four pesticides in surface soil and one pesticide in subsurface soil exceeded screening levels. The elevated detections were associated with an identified soil pile located adjacent to the southeast corner of the gravel waste accumulation area. Concentrations of pesticides were not detected in groundwater.
- Two PCBs were detected at concentrations exceeding screening levels in soil, primarily associated with identified soil piles. PCBs were not detected in groundwater. Analysis for PCB congeners indicated that the potential for Aroclor analysis to misidentify or underestimate concentrations as a result of degradation and/or weathering is minor.
- VOCs were not detected at concentrations above their screening levels in soil. Two VOCs were detected in 2011 groundwater samples at concentrations exceeding screening levels.
- SVOCs (predominantly PAHs) were detected in surface and subsurface soil: one PAH in surface soil and two in subsurface soil exceed residential preliminary screening values, but none were detected at concentrations that exceed their Redstone Arsenal-specific dilution-attenuation factor 4 soil screening levels. The extent of contamination for PAHs was determined in soil. Concentrations of four PAHs exceeded groundwater preliminary screening values in one 2011 groundwater sample; however, these results were not confirmed in 2013 sampling.

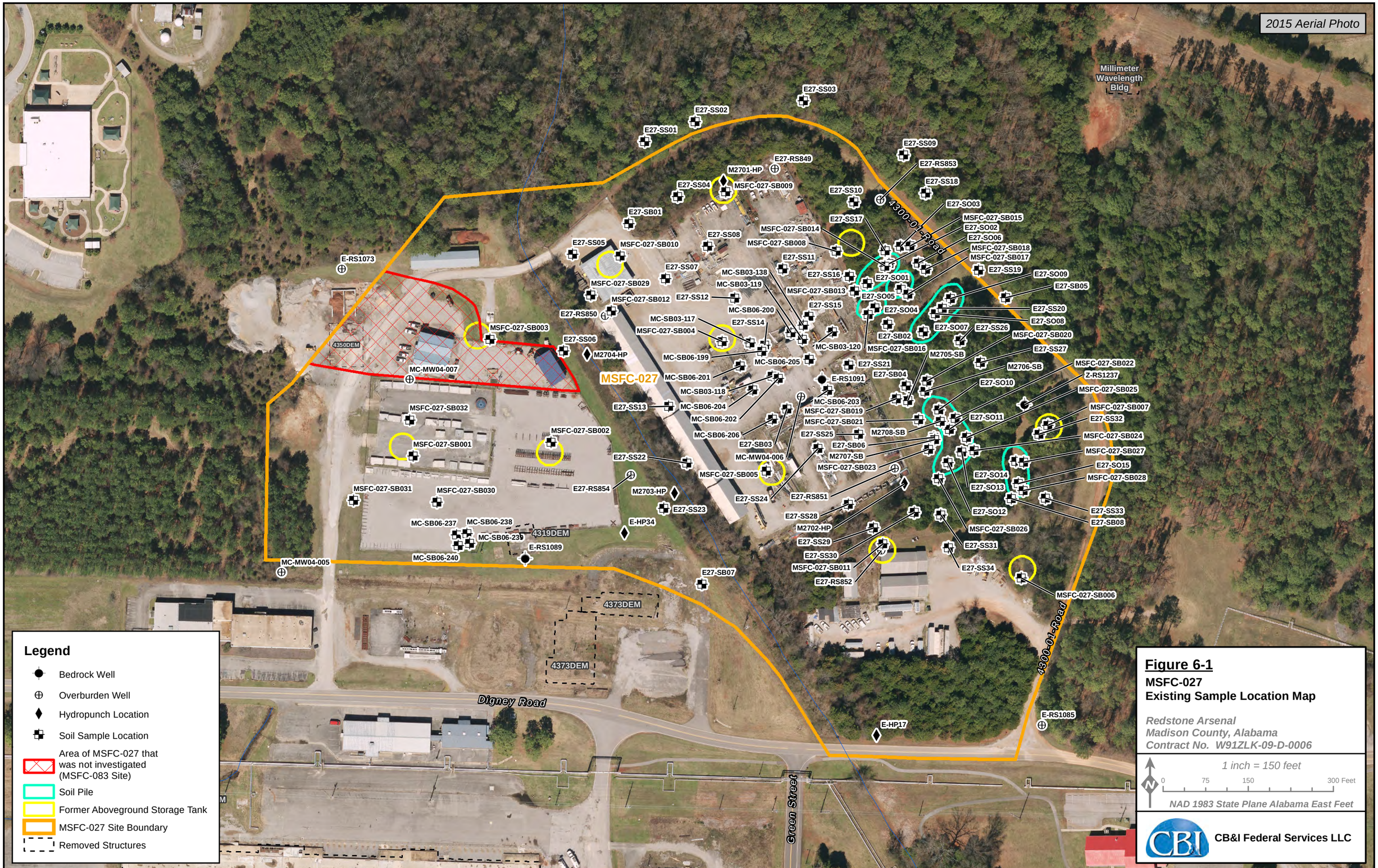

Figure 6-1
MSFC-027
Existing Sample Location Map

Redstone Arsenal
Madison County, Alabama
Contract No. W91ZLK-09-D-0006

H:\Redstone\GIS_Documents\Project_maps\MSFC_027\MSFC_027_CMIP_Dec2015\MSFC_027_Sample_Location_Map.mxd

6.1 Fate and Transport

At MSFC-027, the major potential contaminant migration pathway was identified as leaching of site-related chemicals from soil to form leachate and the subsequent transport to the water table as a result of the downward percolation of infiltrating rainfall. Organic and inorganic chemicals present in soil may undergo dissolution by rainfall, partition into leachate, and be transported to groundwater via percolation and downward migration. Prior to reaching groundwater, contaminant concentrations are attenuated during transport by mechanical dispersion, degradation, and/or adsorption to soil particles.

Six detections of arsenic in subsurface soil from five locations associated with the soil piles were determined by the site-to-background evaluation to contain anomalously high arsenic concentrations (CB&I, 2014). These anomalous detections are bounded by both shallower (including surface soil) and deeper intervals at each subject location by concentrations lower than the screening values. The likely transport medium is movement of infiltrating groundwater through the soil pile. Dissolved arsenic moving down into the soil column was likely immobilized (i.e., mineralized) when a subsurface interval exhibiting higher pH values and higher clay (iron) content caused the arsenic to become less soluble, thereby creating a zone of discrete anomalous concentrations. Arsenic was not detected in 11 groundwater samples collected from eight on-site wells in 2009 through 2011, indicating that soil concentrations do not pose a threat to groundwater from the soil-to-groundwater migration pathway.

7.0 Land and Resources Use

7.1 Land Use

Land use across MSFC-027 is designated as “business” (industrial and/or administrative). The portion of MSFC-027 east of the drainage ditch measures approximately 16 acres and is occupied by buildings, parking and storage lots, and wooded areas. The inactive waste accumulation area (approximately 5.5 acres) is included in this 16-acre section. The western portion of the site (approximately 8 acres) is occupied by gravel/asphalt storage areas, buildings, and mowed grass areas. Although the use of MSFC-027 is not designated residential nor expected to be in the future, the Alabama Risk-Based Corrective Action (ARBCA) human health evaluation assesses risks from residential site use, which is helpful in determining whether there is a benefit to incrementally increasing the scope of remediation to include cleanup to residential standards to attain unrestricted land use.

7.2 Current Groundwater Use

Groundwater under RSA is not currently used for any potable uses. RSA’s installation-wide groundwater interim record of decision (Shaw, 2007) and land-use control remedial design (Shaw, 2009) and the Army’s site access control program (Army, 2012) prevent the current use of groundwater for potable purposes and ensure that any nonpotable uses of groundwater are reviewed and evaluated by the Army prior to being permitted.

7.3 Future Groundwater Use

An interim record of decision (IROD) has been approved for installation-wide groundwater land-use controls (Shaw, 2007; 2009). This IROD covers the entire RSA site (fence to fence) with the exception of the NASA MSFC area. The groundwater under the MSFC portion of RSA is not part of the scope of the IROD. Although the groundwater underlying MSFC is technically inseparable from the rest of RSA groundwater, NASA is developing a separate interim remedial action proposed plan and IROD to address similar risks from contaminated groundwater (i.e., OU-3) under its portion of RSA. This ongoing monitoring will allow the Army and ADEM to assess the rate of long-term groundwater recovery and also to ensure protection for residents living outside of the boundaries of RSA (CB&I, 2015b).

8.0 Site Risks

An ARBCA human health risk evaluation, which includes a vapor intrusion evaluation, and a screening-level ecological risk assessment (SLERA) were performed for MSFC-027 (CB&I, 2014). The site risks are summarized below.

8.1 Human Health Risk

The ARBCA evaluation concluded that arsenic, PCBs, and 4,4'-DDT residues may pose an unacceptable health risk to commercial/industrial or residential receptors from exposure to soil in the piles. Groundwater beneath MSFC-027 may pose an unacceptable risk to commercial/industrial or residential receptors from direct exposure to mercury, cis-1,2-dichloroethene, and TCE in groundwater developed as a potable source. Any potential actions for groundwater will be addressed as part of the MSFC OU-3 groundwater unit investigation.

8.2 Vapor Intrusion

A screening-level vapor intrusion evaluation concluded that VOC concentrations in soil and groundwater do not appear to pose an unacceptable health threat to occupants of current or future buildings. Therefore, no further action regarding the vapor intrusion pathway is warranted.

8.3 Ecological Risk

A SLERA was completed for MSFC-027. The surface soil data for MSFC-027 for both the soil piles areas and the remainder of the site were compared to their respective ecological screening values. The constituents that exceeded ecological screening values were further evaluated in a chemical of potential ecological concern refinement process, and then community-level and food chain ecological assessments.

The food chain assessment of surface soil in the soil pile areas showed concentrations of PCB congeners and DDT and metabolites pose a potential hazard to ecological populations. The food chain assessment of surface soil in the remainder of the site showed that sensitive individuals may be adversely affected by selenium and zinc, but populations of food chain receptors are unlikely to be adversely affected.

Based on the results of the SLERA (CB&I, 2014), it was concluded that constituents in surface soil at the MSFC-027 soil piles have the potential to pose hazards to ecological receptors. Constituents in surface soil at the MSFC-027 remainder of site are unlikely to pose ecological hazards, with the possible exception of selenium, which may pose hazards to terrestrial plant communities. However, selenium's mean concentration is less than its background screening

value, indicating that concentrations of selenium across the site are similar to naturally occurring background levels.

9.0 Objectives of the Corrective Measures and Cleanup Goals

The RFI (CB&I, 2014) defined the nature and extent of contamination and evaluated potential risks to current and future receptors and concluded that further action is required. In the ARBCA RM-2 evaluation of the soil pile areas, chemicals in soil were identified as relevant chemicals of concern (COC) warranting further action. In addition, the SLERA concluded that constituents in surface soil at the MSFC-027 soil piles have the potential to pose hazards to ecological receptors. Corrective actions are therefore needed to address the soil pile areas of MSFC-027. For administrative purposes, separate surface and groundwater sites have been established at RSA for evaluation and remediation under the RCRA regulatory process. Groundwater is being evaluated as part of the MSFC OU-3 groundwater unit investigation.

The Army intends to achieve closure for soils at MSFC-027 through the implementation of corrective measures, as they are needed to protect human health.

Based on the results of the RFI, the corrective measures objective for MSFC-027 is as follows:

- Reduce exposure of commercial workers and future residents to soil in the area of the soil piles contaminated with arsenic such that background conditions are achieved, and
- Reduce exposure of commercial workers and future residents to soil in the area of the soil piles contaminated with Aroclor 1260, 4,4'-DDT, 4,4'- DDE, and 4,4'- DDD such that the cumulative cancer risk associated with exposure to these chemicals is equal to or less than 1E-05.

It is presumed that achieving the above objective will also prevent any potential hazard to ecological receptors associated with exposure to surface soil in the area of the soil piles.

CGs are relevant to alternatives that reduce concentrations, such as excavation or treatment. The RFI (CB&I, 2014) concluded that arsenic, Aroclor 1260, 4,4'-DDT, 4,4'-DDE, and 4,4'-DDD in the soil piles areas of MSFC-027 significantly contribute to an unacceptable risk to commercial workers and future residential receptors. The RFI (CB&I, 2014) also determined that Aroclor 1254 contributed to the noncancer hazard associated with the soil piles. A cleanup goal (CG) is not developed for Aroclor 1254 because it contributed to the target organ hazard index for skin effects, which was greater than 1 due to the presence of arsenic. Since the corrective measures objective for arsenic is based on background, the noncancer hazard associated with Aroclor 1254 does not warrant further action.

The cumulative cancer risk limit identified by ARBCA is 1E-05 (ADEM, 2008b). This limit is used as the basis for CGs with the exception of arsenic. The CGs for arsenic are based on the background screening values: 15 milligrams per kilogram for surface soil and 18 milligrams per kilogram for subsurface soil. CGs for the remaining COCs are set to achieve a cumulative cancer risk of 1E-05. The CGs were derived by using the information on representative concentrations and estimated individual excess lifetime cancer risk from Table D-27 of the RFI report (CB&I, 2014). The soil concentrations were adjusted to achieve a cumulative risk of the COCs to a residential receptor of 1E-05. The target risk selected for each COC was 2.5E-06.

The corrective measures objectives will be met when confirmation sampling results do not exceed the CGs.

10.0 Description and Comparison of Alternatives

A technology screening was performed to evaluate a number of corrective measures that are potentially applicable to the contaminated soils at MSFC-027, including no action, excavation and off-site disposal, land-use controls, erosion and storm water controls, and a landfill cover. The feasible technologies were packaged into three corrective measures alternatives and further evaluated against 11 evaluation criteria.

The following corrective measures alternatives for the arsenic-contaminated soil were evaluated for MSFC-027:

- Alternative 1: No Action
- Alternative 2: Excavation and Off-Site Disposal
- Alternative 3: Closure In Place with Land-Use and Storm Water Controls.

Alternative 2 involves excavating the contaminated soil at the site. The excavated soils will be transported for disposal as nonhazardous waste at a Subtitle D Landfill. Alternative 3 involves consolidating contaminated soil and leaving waste on site, covering it with an impermeable barrier, and implementing storm water and land-use controls.

11.0 Selected Corrective Measures

Alternative 2 was selected as the most appropriate corrective measures to address the contaminated soil at MSFC-027 in a manner that is cost-effective and consistent with the Army's designated land use the site. No new land-use controls will be implemented for surface media under this alternative. Alternative 2 is less costly and more easily implemented and allows unrestricted use of the land when compared to Alternative 3.

The major components of the selected corrective measures include the following:

- Site preparation
- Removal of soil contaminated with arsenic, Aroclor 1260, 4,4'-DDT, 4,4'-DDE, and 4,4'-DDD to the CGs (approximately 5,000 loose cubic yards)
- Collection and analysis of confirmation and waste characterization samples
- Transportation of contaminated soil for final disposal at an approved off-site facility (Subtitle D landfill)
- Backfill and grading of the excavated areas
- Site restoration, including revegetation of all disturbed areas.

Excavation areas are illustrated on Figure 4-1 of the CMI work plan. The present value cost for the selected corrective measures is as follows:

- MSFC-027 - $791,000.

12.0 Public Involvement

Public participation requirements specified under Alabama Administrative Code 335-14-8-.08(6) will be met during the permit modification process for the MSFC-027 corrective measures. In addition, the Army intends to inform the public of the proposed MSFC-027 corrective measures in a newspaper announcement in local newspapers. In both cases, the public will be provided an opportunity to review and comment on the proposed MSFC-027 corrective measures.

13.0 Conclusions

This request for permit modification presented the supporting information needed to allow ADEM to modify the Permit, in accordance with Alabama Administrative Code R. 335-14-8-.04(2), with respect to the cleanup status at MSFC-027.

14.0 References

A.T. Kearney, Inc., 1989, ***Interim RCRA Facility Assessment of the Redstone Arsenal, Huntsville, Alabama***, EPA ID No. AL 721 002 0742, prepared for the U.S. Environmental Protection Agency, September.

Alabama Department of Environmental Management (ADEM), 2015, ***Redstone Arsenal's Alabama Hazardous Wastes Management and Minimization Act Hazardous Waste Storage Facility, Thermal Treatment, Solid Waste Management Unit Corrective Action Permit, Modification No. 6***, July 6.

Alabama Department of Environmental Management (ADEM), 2008a, ***Draft RCRA Facility Assessment, Redstone Arsenal, Huntsville, Alabama,*** Draft, EPA ID Number AL7 201 020 742, September.

Alabama Department of Environmental Management (ADEM), 2008b, ***Alabama Risk-Based Corrective Action Guidance Manual***, Revision 2, April.

CB&I Federal Services LLC (CB&I), 2015a, ***RCRA Facility Investigation Report RSA-147, RSA-148, and RSA-149, Groundwater Sites Groundwater Units GW-03, GW-04, and GW-05, Operable Unit 19, U.S. Army Garrison-Redstone, Madison County, Alabama***, September.

CB&I Federal Services LLC (CB&I), 2015b, ***Annual Monitoring Report: 2014 Installation-Wide Groundwater Monitoring, U.S. Army Garrison-Redstone, Madison County, Alabama***, prepared for U.S. Army Environmental Command, Aberdeen Proving Ground, Maryland, May.

CB&I Federal Services LLC (CB&I), 2014, ***Revision 1 RCRA Facility Investigation Report, MSFC-027, Inactive Waste Accumulation Area, Operable Unit 18, U.S. Army Garrison-Redstone, Madison County, Alabama***, June.

Geraghty and Miller, Inc. (G&M), 1991, ***Final Identification and Evaluation of Potential Solid Waste Management Units and Areas of Concern, Redstone Arsenal, Alabama***, consulting report prepared for U.S. Army Corps of Engineers, Huntsville District, Huntsville, Alabama, February.

IT Corporation (IT), 1999a, ***Draft Interim Report of Findings of the Characterization at the Former M-1 Waste Accumulation Area, MSFC-027, Redstone Arsenal, Madison County, Alabama,*** December.

IT Corporation (IT), 1999b, ***Draft Action Memorandum Time Critical Removal Action At MSFC-027 Former M-1 Waste Accumulation Area***, Operable Unit 5, Redstone Arsenal, Madison County, Alabama, prepared for U.S. Army Corps of Engineers, Savannah District, December.

National Aeronautics and Space Administration (NASA), 2012, ***Groundwater Monitoring Report for 2011***, prepared for National Aeronautics and Space Administration Marshall Space Flight Center, January.

Shaw Environmental, Inc. (Shaw), 2012a, ***Site-Specific Field Sampling Plan for a Phase II RCRA Facility Investigation at MSFC-027, Inactive Waste Accumulation Area, Operable Unit 18, Redstone Arsenal, Huntsville, Alabama,*** U.S. Army Garrison-Redstone, Madison County, Alabama, April.

Shaw Environmental, Inc. (Shaw), 2012b, ***Site-Specific Field Sampling Plan for a Phase III RCRA Facility Investigation at MSFC-027, Inactive Waste Accumulation Area, Operable Unit 18, Redstone Arsenal, Huntsville, Alabama,*** U.S. Army Garrison-Redstone, Madison County, Alabama, December.

Shaw Environmental, Inc. (Shaw), 2011, ***Site-Specific Field Sampling Plan for a RCRA Facility Investigation at MSFC-027, Inactive Waste Accumulation Area, Operable Unit 18, Redstone Arsenal, Huntsville, Alabama,*** U.S. Army Garrison-Redstone, Madison County, Alabama, March.

Shaw Environmental, Inc. (Shaw), 2009, ***Final Installation-Wide Groundwater Land-Use Control Remedial Design, Redstone Arsenal, Madison County, Alabama,*** prepared for U.S. Army Corps of Engineers, Savannah District, Savannah, Georgia, May.

Shaw Environmental, Inc. (Shaw), 2007, ***Final Interim Record of Decision, Interim Remedial Action for Installation-Wide Groundwater, Redstone Arsenal, Madison County, Alabama***, prepared for the U.S. Army Corps of Engineers, Savannah District, Savannah, Georgia, September.

U.S. Army Garrison-Redstone (Army), 2012, ***Redstone Arsenal Environmental Site Access Control Program,*** Redstone Arsenal Regulation 200-7, September.

ATTACHMENT 1

RFI REPORT CONCURRENCE LETTER

LANCE R. LEFLEUR
DIRECTOR

ADEM

ROBERT J. BENTLEY
GOVERNOR

Alabama Department of Environmental Management
adem.alabama.gov
1400 Coliseum Blvd. 36110-2400 ▪ Post Office Box 301463
Montgomery, Alabama 36130-1463
(334) 271-7700 ▪ FAX (334) 271-7950

August 25, 2014

CERTIFIED MAIL # 91 7199 9991 7030 3168 4729

Mr. Terry Hazle
Director
Directorate of Environmental Management
DEPARTMENT OF THE ARMY
Installation Restoration Division
(AMSAM-RA-DEM-IR)
US Army Aviation and Missile Command
Bldg. 4488
Redstone Arsenal, AL 35898

RE: **ADEM Review and Concurrence:** *Revision 1 Resource Conservation and Recovery Act Facility Investigation (RFI) Report for MSFC-027, Inactive Waste Accumulation Area, Operable Unit 18*, dated June 10, 2014
Redstone Arsenal (RSA) DSMOA Environmental Restoration Program
U.S. EPA I.D. No. AL 7 210 020 742

Dear Mr. Hazle:

The Alabama Department of Environmental Management (ADEM or the Department) has reviewed the Army's *Revision 1 Resource Conservation and Recovery Act Facility Investigation (RFI) Report for MSFC-027, Inactive Waste Accumulation Area, Operable Unit 18*, dated June 10, 2014. Based on its review, the Department has no comments on this RFI Report for MSFC-027 and concurs with the recommendation for corrective measures implementation to be performed for the surface media.

Based on the November 1994 Memorandum of Agreement between the U.S. Army Missile Command and Marshall Space Flight Center (MSFC) and Amendments 1 and 2, dated April 2002 and February 2005, respectively, the Army has determined that groundwater will be addressed by the National Aeronautics and Space Administration (NASA) in MSFC Operable Unit 3. NASA's Operable Unit 3 is contained within the boundaries of the RSA-148 and RSA-147 groundwater units. The findings from the two NASA surface media sites that overlap RSA site MSFC-027 (MSFC-081 and MSFC-083) were reported in NASA's August 2012 ***Final Operable Unit 6 Remedial Investigation Report***. In addition, the complete results of the groundwater investigations were reported in NASA's February 2012 ***Draft Final Operable Unit 3 Remedial Investigation Report***.

Since the findings of this RFI Report indicate action is needed in surface media for arsenic, Aroclor-1254, Aroclor-1260, 4,4'-DDD, 4,4'-DDE, and 4,4'-DDT, a Corrective Measures Implementation (CMI) Plan to address this action is required.
In accordance with Permit Condition VI.E.2, the CMI Plan must be completed within 120 calendar days following notification from the Department that a CMI Plan is required. Therefore, the Army should submit a CMI Plan within 120 calendar days of receipt of this letter. ADEM will move MSFC-027 to Table VI.6 (Sites requiring a corrective measures implementation work plan) in the facility's Alabama Hazardous Wastes Management and Minimization Act (AHWMMA) permit as part of the next permit modification.

If you have any questions on this matter, please contact Philip Stroud of the Facilities Engineering Section at 334-270-5684 or via e-mail at pns@adem.state.al.us.

Sincerely,

Stephen A. Cobb, Chief
Governmental Hazardous Waste Branch
Land Division

SAC/jw/pns

cc: Michelle P. Thornton, US EPA Region IV (via email)
Meredith Anderson, US EPA Region IV (via email)
Director, RCRA Division, US EPA Region IV
Kim Gates, US EPA Region IV (via email)
J. Jason Wilson/ADEM
Brian Roberson, NASA MSFC
Terry de la Paz, Redstone Arsenal
Salee Downey, AMTEC (via email)

APPENDIX B

CORRECTIVE MEASURES IMPLEMENTATION SCHEDULE

MSFC-027 CMIP Proposed Schedule

ID	Task Name	Duration
1		
2	**Procurement and Subcontracting**	25 days
3		
4	Design Optimization Sampling/Analysis/Data Evaluation	45 days
5		
6	**Mobilization**	2 days
7		
8	**Site Preparation**	**8 days**
9	Utility Marking / Survey of Excavation	5 days
10	Erosion Controls	3 days
11		
12	**Excavation**	**38 days**
13	Excavation / Stockpiling	8 days
14	Confirmation / Waste Profile Sampling	30 days
15		
16	**Transportation and Disposal**	8 days
17		
18	**Backfill and Site Restoration**	**12 days**
19	Soil Backfill	10 days
20	Revegetation	2 days
21		
22	**Demobilization**	2 days

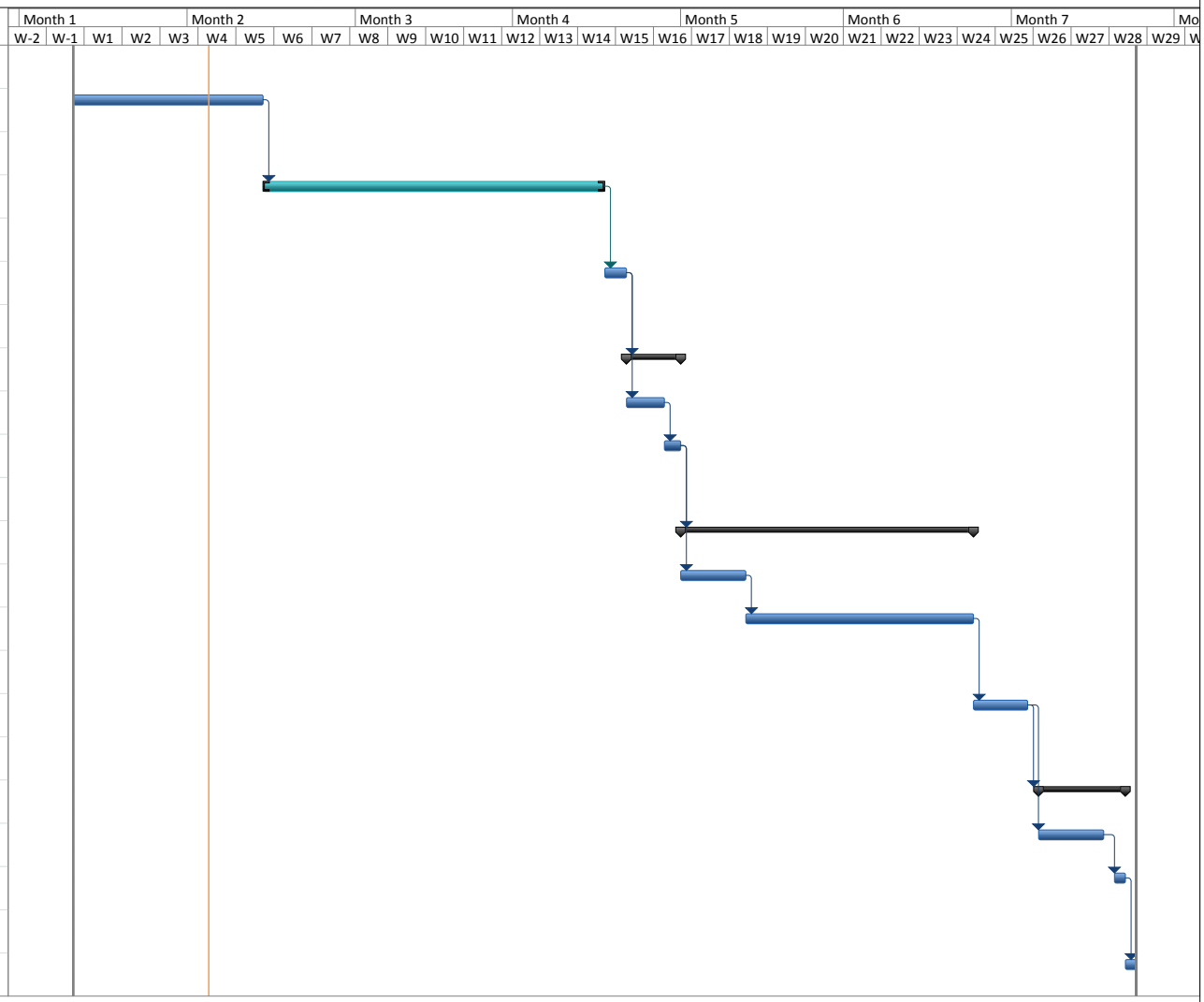

Project: MSFC-027 CMIP Schedule
Date: Tue 1/5/16

Task	Project Summary	Inactive Milestone	Manual Summary Rollup	Deadline
Split	External Tasks	Inactive Summary	Manual Summary	Progress
Milestone	External Milestone	Manual Task	Start-only	
Summary	Inactive Task	Duration-only	Finish-only	

APPENDIX C

SITE-SPECIFIC SAFETY AND HEALTH PLAN

Site-Specific Safety and Health Plan
Corrective Measures Implementation
MSFC-027, Inactive Waste Accumulation Area
Operable Unit 18
U.S. Army Garrison-Redstone
Madison County, Alabama
EPA ID No. AL7 210 020 742

Prepared for:

Mission & Installation Contracting Command
ATTN: MICC Center – FSH
2107 17th Street
Building 4197, Suite 15
Fort Sam Houston, Texas 78234-5015

Prepared by:

CB&I Federal Services LLC
2410 Cherahala Boulevard
Knoxville, Tennessee 37932

Task Order 0014
Contract No. W91ZLK-09-D-0006
CB&I Project No. 500382

April 2016

The following Site-Specific Safety and Health Plan (SSHP) has been designed for the methods presently contemplated by CB&I Federal Services LLC (CB&I) for execution of the proposed work. Therefore, the SSHP may not be appropriate if the work is not performed by or using the methods presently contemplated by CB&I. In addition, as the work is performed, conditions different from those anticipated may be encountered and the SSHP may have to be modified. Therefore, CB&I only makes representations or warranties as to the adequacy of the SSHP for currently anticipated activities and conditions. This Site-Specific Safety and Health Plan Attachment must be used in conjunction with the Installation-Wide Accident Prevention Plan for Environmental Remediation, Restoration and Program Management Services (July 2013).

Reviews and Approvals _____

_____	4/21/16
John Nenni, Project Manager CB&I Federal Services LLC	Date
_____	4/25/16
Doug Russell, H&S Manager CB&I Federal Services LLC	Date
_____	4/21/16
James Vigerust, H&S Field Manager CB&I Federal Services LLC	Date
_____	4/21/16
Brian Rhodes, QCSM CB&I Federal Services, LLC	Date

Acknowledgements

The approved version of this site-specific safety and health plan (SSHP) for corrective measures implementation at site MSFC-027, Inactive Waste Accumulation Area, Operable Unit18, at Redstone Arsenal, Madison County, Alabama, has been provided to the Quality Control Site Manager (QCSM) with the concurrence of the CB&I Health and Safety Field Manager. I acknowledge my responsibility to provide the QCSM with the equipment, materials, and qualified personnel to implement fully all safety requirements in this SSHP. I will formally review this plan with the health and safety staff if site conditions or a change in scope occurs, at least annually, or until project completion.

John Nenni, CB&I Project Manager — Date: 4/21/16

I acknowledge receipt of this SSHP from the Project Manager and that it is my responsibility to explain its contents to all site personnel and cause these requirements to be fully implemented. Any change in conditions, scope of work, or other change that might affect worker safety requires me to notify the Project Manager, Health and Safety Field Manager, and Health and Safety Manager.

Brian Rhodes, CB&I QCSM — Date: 4/21/16

Safety and Health Plan
Acknowledgement Form

I have been informed of and will abide by the procedures set forth in this site-specific safety and health plan and its amendments for the remedial activities associated with MSFC-027 corrective measures implementation at the Redstone Arsenal. By signing this acknowledgement form, I certify receipt of hazard communication training, activity hazard analysis review and understanding of CB&I health and safety policy and procedures required for safe performance of my job at Redstone Arsenal.

Printed Name	Signature	Representing	Date

Redstone Arsenal Gate Hours/Effective 24 February 2014

Location	Weekdays	Weekends
Gate1	0530 - 2100	Closed
Gate 3	0530 – 1300 *	Closed
Gate 7	0530 – 1300 *	Closed
Gate 8	0530 – 1300	0530 - 2400
Gate 9	24/7	24/7
Gate 10	0530 – 2100	Closed
Visitor Center 1	0600 - 1430	Closed
Visitor Center 9	0600 - 1700	Closed

*Gate 3 outbound lanes will remain open until 1800

*Gate 7 outbound lanes will remain open until 2100

Gate hours and conditions are subject to change due to homeland defense initiatives; therefore, the point of contact for the most current gate operational hours is the Provost Marshall Office at (256) 876-4195.

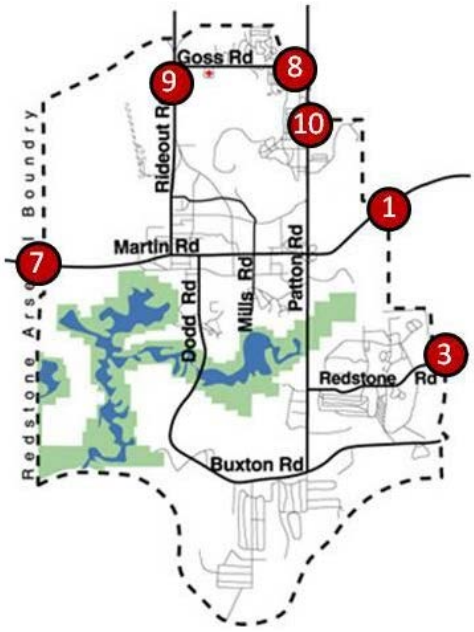

Redstone Project Emergency Contacts

Fire Department (ask for RSA Fire Department) 911
Fire Department (from cellular phone) .....(256) 876-2117
Ambulance (HEMSI) 911
Installation Emergency Operations Center (non-911 emergencies) .....(256) 313-1043
Military Police .....(256) 876-2222
Huntsville Hospital (Emergency Room) .....(256) 265-8144
Huntsville Hospital (Trauma Center) .....(256) 265-8137
Chemical Agent Emergencies (state that you are at Redstone) 911
UXO Emergencies (state that you are at Redstone) 911
UXO Nonemergencies/Reporting Only .....(256) 313-3297
Installation Operations Center .....(256) 313-1043
Garrison Safety Office .....(256) 876-2944
    Michael Moore, Safety Manager .....(256) 313-3297
    Keith Coates, Safety & Occupational Health Specialist .....(256) 876-3383
    Bobby Taylor, Safety & Occupational Health Specialist .....(256) 313-3294
    Jonathan Niedergeses (MEC support) .....(256) 876-9751
Primary Site Emergency Contact (Barry Hodges, Site Manager, U.S. Army Garrison-Redstone) .....(256) 876-0887
Terry de la Paz, U.S. Army Garrison, Chief Installation Restoration Branch .....(256) 955-6968
National Response Center .....(800) 424-8802
Poison Control Center .....(800) 222-1222
EPA Region IV .....(404) 347-3931
John Nenni, CB&I Project Manager .....(256) 213-2192
    (Cellular) .....(419) 420-4623
Brian Rhodes, CB&I QCSM (RSA Field Office) .....(256) 213-2202
    (Mobile/Cellular) .....(256) 714-4200
    (Field Office Fax) .....(256) 213-2190
Doug Russell, CB&I H&S Manager .....(865) 560-7918
    (Mobile/Cellular) .....(865) 414-9545
James Vigerust, CB&I H&S Field Manager .....(256) 213-2196
    (Mobile/Cellular) .....(505) 410-4995
CB&I Hot Line (CB&I incident reporting) .....(866) 299-3445
Dr. William Nassetta, CORE Occupational Physician .....(225) 756-2673
Occupational Health Center, Crestwood Family Practice .....(256) 721-9916
Crestwood Workers Care Madison .....(256) 830-8930

Table of Contents

Page

List of Tables ..... C-ii
List of Figures ..... C-ii
1.0 Site Work Plan Summary C-1
2.0 Site Characterization and Analysis C-2
2.1 Anticipated Hazards C-2
2.2 General Site Information C-4
3.0 Personal Protective Equipment C-5
4.0 Site Monitoring C-7
5.0 Activity Hazard Analysis C-7

Attachment 1 – Evaluating MEC/CWM/CA Hazards in Support of HTRW Activities
Attachment 2 – CB&I Procedure CMS-710-02-PR-01600, Excavation and Trenching
Attachment 3 – CB&I Incident Reporting and Management Procedure-Federal

List of Tables

Table	Title	Follows Tab
2-1	Toxicological and Physical Properties of Chemicals	
4-1	Action Levels	
4-2	Air Monitoring Frequency and Location	
5-1	Activity Hazard Analysis	

List of Figures

Figure	Title	Follows Tab
1	Typical HAZWOPER Site Controls	
2	MSFC-027 Area Hospital Route Map	
3	MSFC-027 Crestwood Family Practice Clinic Route Map	
4	MSFC-027 Crestwood Workers Care Madison Clinic Route Map	

1.0 Site Work Plan Summary

Project Objective. The U.S. Army is conducting investigation and remediation of known or suspected waste sites at Redstone Arsenal (RSA) in Madison County, Alabama, under the Resource Conservation and Recovery Act. The Army has contracted CB&I Federal Services LLC (CB&I) to perform a variety of environmental investigation and remediation services under the management of the U.S. Army Environmental Command. CB&I, on behalf of the Army, prepared this corrective measures implementation (CMI) site-specific safety and health plan (SSHP) for MSFC-027, Inactive Waste Accumulation Area, located within Operable Unit 18. This SSHP incorporates applicable elements of Alabama Department of Environmental Management Hazardous Waste Facility Permit No. AL7 210 020 742 and the most recent edition of the Alabama Environmental Investigation and Remediation Guidance. This SSHP protects employee health from hazardous constituents at concentrations exceeding applicable limits.

The situation warranting action at MSFC-027 is contaminated surface and subsurface soil resulting in risks to hypothetical future residential and commercial worker receptors from direct contact with surface and subsurface soil. The selected corrective measures manage the risks by excavation and off-site disposal of soils at MSFC-027 contaminated with arsenic, polychlorinated biphenyls, and pesticides.

Project Tasks. The following project activities to meet the CMI objectives in support of soil removal actions are detailed in the MSFC-027 CMI work plan:

- Mobilization/demobilization
- Utility clearance and marking
- Construction of erosion controls
- Surveying and marking of the proposed excavation areas
- Excavation of contaminated soil
- Confirmation sampling and analysis of the excavated area
- Waste characterization sampling
- Transport and disposal of excavated arsenic-contaminated soils as nonhazardous waste (Subtitle D landfill)

Site restoration, including application of backfill and topsoil, and revegetation with approved grass mixtures.

Personnel Requirements. Up to 10 employees are anticipated for the CMI at MSFC-027. All personnel on this site shall have received training, informational programs, and medical surveillance as outlined in the installation-wide accident prevention plan for site investigations at RSA and be familiar with the requirements of this SSHP.

Training and medical surveillance documentation will be maintained at the RSA CB&I office.

2.0 Site Characterization and Analysis

2.1 Anticipated Hazards

The activity hazard analysis (Chapter 5.0) contains project-specific practices to be utilized to reduce or eliminate anticipated site hazards. The activity hazard analysis indicates specific chemical and physical hazards that may be present and encountered during each task. Below each task is a list of hazards and specific actions that will be taken to control the respective hazards. These control measures may include work practice controls, engineering controls, health and safety policy reference, and/or use of appropriate personal protective equipment (PPE).

The data collected in several phases during previous investigations at MSFC-027 and as reported in the Resource Conservation and Recovery Act facility investigation (RFI) report defined the nature and extent of contamination and was used to evaluate potential risks to current and future receptors. RFI activities included advancement of soil borings and installation of monitoring wells with associated sampling of surface soil, subsurface soil, and groundwater.

The Alabama Risk-Based Corrective Action Risk Management 2 evaluation identified arsenic, polychlorinated biphenyls, and pesticides in six soil piles as a relevant chemicals of concern (COC) warranting further action because they pose an unacceptable health threat to hypothetical future residents. In addition, the screening-level ecological risk assessment concluded that constituents in surface soil have the potential to pose hazards to ecological receptors. Corrective measures are therefore needed to address COCs in soil at MSFC-027 before the site can be released for unrestricted use.

Potential contamination in groundwater beneath MSFC-027 (including the saturated zone soils) has been characterized in the MSFC-027 RFI report. Groundwater beneath MSFC-027 may pose an unacceptable risk to commercial/industrial or residential receptors from direct exposure to mercury, cis-1,2-dichloroethene, and trichloroethene if developed as a potable source. Trichloroethene and its breakdown products in groundwater appear to have originated from releases that occurred during MSFC operations and are not addressed in this CMI. Any additional action concerning groundwater beneath MSFC-027 will be addressed as part of the

George C. Marshall Space Flight Center (MSFC) Operable Unit 3 groundwater unit investigation.

The nature and extent of contamination at MSFC-027 has been defined and indicates the following:

- Four metals in surface soil and two in subsurface soil associated with on-site soil piles exceeded screening levels and were determined not to be related to naturally occurring background. All other detected metals in soil either did not exceed screening levels or were determined to be naturally occurring based on the site-to-background evaluation. One detection of mercury in groundwater was determined to be anomalously high in the site-to-background evaluation.

- Perchlorate, although not included within the MSFC-027 conceptual site model, was analyzed for in four monitoring wells as part of installation-wide groundwater assessments; concentrations did not exceed groundwater screening values.

- Four pesticides in surface soil and one pesticide in subsurface soil exceeded screening levels. The elevated detections were associated with an identified soil pile located adjacent to the southeast corner of the gravel waste accumulation area. Concentrations of pesticides were not detected in groundwater.

- Two polychlorinated biphenyls were detected at concentrations exceeding screening levels in soil, primarily associated with identified soil piles. Polychlorinated biphenyls were not detected in groundwater. Analysis for polychlorinated biphenyl congeners indicated that the potential for Aroclor analysis to misidentify or underestimate concentrations as a result of degradation and/or weathering is minor.

- Volatile organic compounds (VOC) were not detected above their screening levels in soil. Concentrations of two VOCs were detected in 2011 groundwater samples at concentrations exceeding screening levels.

Semivolatile organic compounds (predominantly polynuclear aromatic hydrocarbons [PAH]) were detected in surface and subsurface soil: one PAH in surface soil and two in subsurface soil exceed residential preliminary screening values, but none were detected at concentrations that exceed their Redstone Arsenal-specific dilution-attenuation factor 4 soil screening levels. The extent of contamination for PAHs was determined in soil. Concentrations of four PAHs exceeded groundwater preliminary screening values in one 2011 groundwater sample; however, these results were not confirmed in 2013 sampling.

Table 2-1 lists toxicological and physical properties of chemicals identified in previous sampling events and those expected for use during this CMI. Italicized chemical names represent material CB&I anticipates using on site.

Munitions and Explosives of Concern/Chemical Warfare Materiel/Chemical Agent. Available information including historical records and recent environmental sampling data was reviewed with respect to munitions and explosives of concern (MEC) including chemical warfare materiel (CWM), or chemical agent (CA) potential at MSFC-027. The review indicated that the probability of encountering unknown liquid-filled munitions or other items, measurable concentrations of CA or agent breakdown products is "unlikely." The probability of encountering UXO is "none." The hazard evaluation process is documented in the MEC/CWM/CA hazard forms provided in Attachment 1. Based on this evaluation, it was determined that CA monitoring or on-site unexploded ordnance (UXO) support will not be required for the CMI. However, in the event any suspicious item is encountered, all work shall stop and the Project Manager and Health and Safety Manager will be notified. The Project Manager will be responsible for following the notification requirements in accordance with the RSA Explosive Safety Management Program (current version). If the suspicious item can be positively identified by qualified UXO personnel as not presenting an explosive or chemical agent hazard or once the hazard has been removed, work will proceed. Further information on this hazard identification, notification, and removal process is presented in RSA's Installation-Wide Accident Prevention Plan.

2.2 General Site Information

RSA is located in southern Madison County, Alabama, and bounded by the city of Huntsville to the north and east and by the Tennessee River to the south. The towns of Madison and Triana are northwest and southwest of the facility, respectively. RSA encompasses approximately 38,300 acres, and the Department of the Army controls 36,459 acres of that total, of which approximately 15,500 acres are woodlands, 5,360 acres are leased for agricultural use, and approximately 12,000 acres are used for test ranges. The National Aeronautics and Space Administration was granted 1,841 acres in the central part of RSA for the MSFC. Prior to this land grant in 1960, the area occupied by MSFC was used by the Army. Approximately 2,900 acres owned by the Tennessee Valley Authority and 4,100 acres of the Wheeler National Wildlife Refuge are within the boundaries of RSA. A description of MSFC-027 is provided below.

MSFC-027. MSFC-027 currently occupies approximately 24 acres in the central portion of RSA, with 8 acres within the National Aeronautics and Space Administration (NASA) MSFC boundary. The site lies above the RSA-148 and RSA-149 groundwater units. When initially designated as the M-1 Waste Accumulation Area, the site occupied approximately 4 acres surrounded by a chain-link fence and paved with gravel and asphalt.

The site contains buildings, open storage areas, paved asphalt roadways, wooded areas, and maintained grass. Originally, this area was utilized for bulk aboveground storage of fuel oil and ethanol, supporting the production of ethylene gas in the manufacturing of the chemical agent mustard in 1943. These storage tanks were removed between 1956 and 1959. In the late 1950s through the early 1960s, missile component testing was conducted in the eastern portion of the site by the Army. In July 1960, the Army granted use and occupancy to NASA MSFC. Two NASA-responsible sites, including MSFC-081 (Paint Spray Booth) and MSFC-083 (Groundskeeper/Future Area Building 4348) are wholly (MSFC-081) or partially (MSFC-083) located within the MSFC-027 boundary. These sites are currently being investigated by NASA in compliance with the Comprehensive Environmental Response, Compensation, and Liability Act.

Waste accumulation and storage by the Army and NASA began between 1961 and 1964, based on aerial photographs and documentation. This section of the site was utilized as an accumulation area for wastes generated primarily by maintenance activities, including the storage of scrap metal, waste oils, solvents, sludge, and soil piles suspected to have been composed of sewage sludge. The soil associated with the soil piles was placed on the existing grade. The period of operation as a waste accumulation area was from the 1960s to 1987. ADEM inspected the site in July 1986 and noted no violations or hazardous waste activities in the area. The site is no longer used for waste accumulation but remains active as an equipment and materials storage yard for MSFC.

The MSFC-027 RFI report provides additional detail on the geology and hydrogeology at the site.

3.0 Personal Protective Equipment

The work activities will begin in the following levels of protection.

Task	Initial Level of PPE
Mobilization and equipment staging	Level D
Utilities identification and locating	Level D
Construction of erosion controls	Level D
Surveying and marking the proposed excavation areas	Level D
Soil excavation	Modified Level D
Confirmation sampling and analysis of the excavated area	Modified Level D
Waste characterization sampling.	Modified Level D
Transport and disposal of excavated soils contaminated with arsenic as nonhazardous	Level D

Task	Initial Level of PPE
waste (Subtitle D landfill)	
Backfilling	Level D
Decontamination	Modified Level D
Site restoration	Level D

Based on the maximum arsenic, polychlorinated biphenyl, and pesticide concentrations from previous investigations, it is unlikely Level C PPE will be necessary. However, air monitoring will be required to provide additional margin of safety.

Complete descriptions of Level D and Modified Level D PPE follow.

Level D. The following equipment will be used for Level D protection:

- Long-sleeved shirt and long pants
- Leather gloves (when handling sharp objects)
- Nitrile gloves (when handling potentially contaminated materials)
- Steel/composite-toed safety boots
- Safety glasses
- Hard hat

Hearing protection (when working near/adjacent to operating equipment).

Modified Level D. The following equipment will be used for Modified Level D protection:

- Permeable Tyvek®, Kleenguard, or its equivalent
- Latex boot covers
- Nitrile gloves (outer)
- Lightweight nitrile gloves (inner)
- Steel/composite-toed safety boots
- Safety glasses
- Hard hat

Hearing protection (when working near/adjacent to operating equipment).

Operators of pressure washing equipment shall wear a face shield and leg guards in addition to Modified Level D PPE.

Level C. Level C protection is not anticipated unless an upgrade in respiratory protection is required based on air monitoring action levels. The following equipment will be used for Level C protection:

- National Institute for Occupational Safety and Health-approved full-face, air-purifying respirators equipped with organic vapor/acid gas cartridges and P100 particulate filter

- Permeable Tyvek or Tychem, taped at gloves, boots, and respirator; impermeable Tyvek if splash hazard exists
- Nitrile gloves (outer)
- Lightweight nitrile gloves (inner)
- Neoprene steel-toed boots or latex overbooties/steel/composite-toed safety boots
- Hard hat

Hearing protection (when working near/adjacent to operating equipment).

4.0 Site Monitoring

The primary COCs, based on review of historical information and analytical data from previous sampling activities, include arsenic, polychlorinated biphenyls, and pesticides in surface and subsurface soil. The potential for chemical exposure through skin contact and inhalation is unlikely during remedial activities. The Site Safety and Health Officer or qualified field leader will perform air monitoring for VOCs and lower explosive limits using a photoionization detector with minimal 10.6-electron volt lamp and total dust using a Data Ram PDR 1000 or equivalent real-time aerosol monitor during excavation of contaminated soil.

A calibrated combustible gas/oxygen analyzer with a photoionization detector (i.e., MSA Sirius or equivalent) will be utilized to monitor the work area for potential flammable and/or oxygen-deficient atmospheres and VOCs to determine if airborne material may be present that would necessitate upgrading of protection level. Respirable dust measurements shall be collected during CMI using a Data Ram PDR 1000 or equivalent real-time aerosol monitor. Dust suppression will commence when aerosol levels in the work area or directly downwind reach 2.5 milligrams per cubic meter. This level is one half the Occupational Safety and Health Administration particulate not otherwise specified threshold respirable fraction and will provide adequate protection to remediation workers based on previous analysis of analytical data. Action levels for air monitoring are provided in Table 4-1. Table 4-2 provides the minimum air monitoring frequency and locations.

5.0 Activity Hazard Analysis

The activity hazard analysis (Table 5-1) is provided for the following CMI activities at RSA:

- Staging equipment and general field activities
- Utility clearance
- Soil removal

- Material storage

High-pressure water jetting operations (pressure washing).

During excavation and trenching, CB&I Procedure CMS-710-02-PR-01600 (Attachment 2) specific to excavation and trenching safety must be followed. This procedure complies with Occupational Safety and Health Administration Regulations 1926.650 through 1926.652 and EM 385 1-1. No one is permitted to enter any excavation greater than 4 feet deep unless it is made safe for entry and inspected by the competent person. For this CMI, no one shall enter an excavation. Sloping (sloping system) requirements shall be in accordance with 29 Code of Federal Regulations 1926 Subpart P, Appendix B. Sloping shall take into account, at a minimum, the angle of incline required to prevent a cave-in with differences in such factors as the soil type, environmental conditions of exposure, and application of surcharge loads.

All excavation shall be performed from a stable ground position. Daily inspections of the excavation shall be made as needed throughout work shifts and after every rainstorm or other hazard-increasing occurrence by a competent person who has received training and is competent in excavation safety. The competent person shall determine the likelihood of a cave-in, and reasonable actions such as sloping or shoring shall be taken if the walls appear to be unstable. Excavations classified as confined space shall follow CB&I Procedure CMS-710-02-PR-01700, *Confined Spaces.* When it is necessary for personnel to be near the excavation for photographic documentation, an excavation-competent person must deem it safe to do so. Otherwise, all excavations shall be photographed by the excavator operator from within the cab when it is safe to do so.

All spoil shall be located at least 3 feet from the edge of the excavation to prevent loading on the excavation platform. The excavation shall be guarded on all sides by barricades or caution tape at least 10 feet from the edge. Class II protection around excavations within the delineated exclusion zone shall be utilized. Figure 1 is a typical Hazardous Waste Operations and Engineering Response site control illustration.

All project personnel shall participate in the daily tailgate safety meetings and be instructed on the following requirements:

- Before excavating, the existence and location of underground pipe, electrical equipment, and gas lines will be determined. This will be done in accordance with CMS-710-02-PR-01600 by contacting the appropriate RSA representative to mark the location of the lines. If the RSA representative's knowledge of the area is incomplete, an appropriate device such as ground-penetrating radar, air knife, geophysics, or equivalent to protect personnel and minimize CB&I liability will be used to locate the service line.

- If excavating equipment is located in the vicinity of overhead power lines, a minimum distance of 15 feet must be maintained between the lines and any point on the equipment. If the lines have appreciable sag or windy conditions exist, this distance shall be 20 feet.

Only hand digging shall occur within 3 feet of underground utilities. When the lines are exposed, heavy equipment can be used but must remain 3 feet from the exposed utility. A spotter shall be required at all times when working near exposed lines.

All occupational injuries or illness shall be immediately reported and investigated in accordance with CB&I CMS-710-01-PR-02200, *Incident Notification*. Attachment 3 contains the Incident Reporting Management Procedure-Federal. Injuries that require emergency medical evaluation/treatment shall be cared for by Huntsville Hospital ([256] 265-8137). A map and directions to the hospital from the site area are provided on Figure 2. Personnel calling 911 for emergency medical services with a cellular phone must state that they are located on RSA in order for the call to be directed to the proper emergency management office. Any suspect chemical agent exposure requires notification to the RSA Explosive Safety Management Program. In the event a medical or MEC emergency occurs, the Garrison Installation Operations Center ([256] 313-1043) must be notified and updated after initial emergency contacts have been completed in order to update IOC on the situation.

Injuries that require medical treatment beyond on-site first aid but are not life threatening or severe in nature shall be cared for and evaluated by an occupational physician. The occupational clinic, Crestwood Family Practice ([256] 721-9916), has been selected for CB&I employees working at RSA. A map and directions to the occupational clinic from the site area are provided on Figure 3. A map and directions for an additional occupational clinic, Crestwood Workers Care Madison, are provided on Figure 4. Subcontractors are encouraged to establish occupational medicine services prior to work on site.

TABLES

Table 2-1

Toxicological and Physical Properties of Chemicals
Corrective Measures Implementation
MSFC-027
Redstone Arsenal, Madison County, Alabama

Substance [CAS]	IP[a] (eV)	Odor Threshold (ppm)	Route[b]	Symptoms of Exposure	Treatment	TWA[c]	STEL[d]	Source[e]	IDLH (NIOSH)[f]
Chlorodiphenyl PCB (60% chlorine, 1260) [1336-36-3]	?	?	Inh Abs Ing	Irritating to eyes, chloracne, liver damage reproductive organ effects	Eye: Irrigate immediately Skin: Soap wash promptly Breath: Respiratory support Swallow: Immediate medical attention	0.5 mg/m^3 (skin) 0.5 mg/m^3 (skin) 0.001 mg/m^3		PEL TLV REL	Ca 5 mg/m^3
Coal tar pitch volatiles (e.g., pyrene, phenanthrene, chrysene, anthracene, benzo(a)pyrene) [65996-93-2]	?	?	Inh Con	Bronchitis [potential occupational carcinogen]; dermatitis.	Eye: Irrigate immediately Skin: Water flush promptly Breath: Respiratory support Swallow: Immediate medical attention	0.2 mg/m^3 0.1 mg/m^3		PEL TLV REL	80 mg/m^3
Dichlorodiphenyl-trichloroethane (DDT) [50-29-3]	NA		Inh Abs Ing Con	Irritating to eyes and skin, paresthesia tongue, lips, face; Dizziness, confusion, headache, fatigue, convulsions (carcinogen)	Eye: Irrigate immediately Skin: Soap wash promptly Breath: Respiratory support Swallow: Immediate medical attention	1 mg/m^3 0.5 mg/m^3		PEL TLV REL	500 mg/m^3 Ca
Fuel oil (diesel oil, medium)	None	None	Ing Inh Con	Ingestion causes nausea, vomiting, and cramps; depressed central nervous system, headache, coma, death; pulmonary irritation; kidney and liver damage; aspiration causes severe lung irritation, coughing, gagging, dyspnea, substernal stress, pulmonary edema; broncho-pneumonia; excited, then depressed, central nervous system.	Eye: Irrigate promptly Skin: Soap wash Breath: Respiratory support Swallow: Immediate medical attention Aspiration: Immediate medical attention			PEL TLV REL	

Table 2-1

Toxicological and Physical Properties of Chemicals
Corrective Measures Implementation
MSFC-027
Redstone Arsenal, Madison County, Alabama

Substance [CAS]	IP[a] (eV)	Odor Threshold (ppm)	Route[b]	Symptoms of Exposure	Treatment	TWA[c]	STEL[d]	Source[e]	IDLH (NIOSH)[f]
Gasoline [8006-61-9]	None	0.3	Inh Ing Con	Intoxication, headaches, blurred vision, dizziness, nausea; eye, nose throat irritation; potential kidney and other cancers. Carcinogenic.	Eye: Irrigate immediately (15 min) Skin: Soap wash promptly Breath: Respiratory support Swallow: Immediate medical attention	300 ppm Ca, lowest feasible conc. (LOQ 15 ppm)	500 ppm	PEL TLV REL	1400 ppm 10% LEL
Hydrogen chloride (hydrochloric acid) [74-90-8]	12.74	0.255–10.6	Inh Ing Con	Inflamed nose, throat, larynx; cough, burns throat, choking; burns eyes, skin; dermatitis; in animals; laryngeal spasm; pulmonary edema.	Eye: Irrigate immediately Skin: Water flush immediately Breath: Respiratory support Swallow: Immediate medical attention		C5 ppm C5 ppm C5 ppm	PEL TLV REL	100 ppm
Isopropyl alcohol (isopropanol) [67-63-0]	10.16	43–200	Inh Ing Con	Mild irritation of the eyes, nose, and throat; drowsiness, dizziness, headache; dry, cracked skin.	Eye: Irrigate immediately Skin: Water flush Breath: Respiratory support Swallow: Immediate medical attention	400 ppm 400 ppm 400 ppm	500 ppm 500 ppm 500 ppm	PEL TLV REL	2,000 ppm
Methanol	10.85	4.2-5960	Inh Abs Ing Con	Irritated eyes, headache, drowsiness, lightheadedness, nausea, vomiting, disturbance in vision, blindness.	Eye: Irrigate immediately Skin: Water flush promptly Breath: Fresh air Swallow: Immediate medical attention		200 ppm (skin) 200 ppm (skin) 200 ppm	PEL TLV REL	6000 ppm
Nitric acid [7697-37-2]	11.95	0.3–1	Inh Ing Con	Irritated eyes, mucous membranes, and skin; delayed pulmonary edema, pneumonitis, bronchitis; dental erosion.	Eye: Irrigate immediately Skin: Water flush promptly Breath: Respiratory support Swallow: Immediate medical attention	2 ppm 2 ppm 2 ppm	4 ppm 4 ppm 4 ppm	PEL TLV REL	100 ppm
Arsenic [7440-38-2]			Inh Ing Con Abs		Eye: Irrigate immediately Skin: Water flush promptly Breath: Respiratory support Swallow: Immediate medical attention	0.010 mg/m^3 0.01 mg AS/m3 TWA 0.002 mg/m^3		PEL TLV REL	5 mg/m^3 as Arsenic

Chemical substances *Italicized* represent material CB&I may use on site and do not indicate a site-related contaminant of concern.

Table 2-1

Toxicological and Physical Properties of Chemicals
Corrective Measures Implementation
MSFC-027
Redstone Arsenal, Madison County, Alabama

[a]IP - Ionization potential (electron volts).
[b]Route - Inh, Inhalation; Abs, Skin absorption; Ing, Ingestion; Con, Skin and/or eye contact.
[c]TWA - Time-weighted average. The TWA concentration for a normal work day (usually 8 or 10 hours) and a 40-hour work week, to which nearly all workers may be repeatedly exposed, day after day without adverse effect.
[d]STEL - Short-term exposure limit. A 15-minute TWA exposure that should not be exceeded at any time during a workday, even if the TWA is not exceeded.
[e]PEL - Occupational Safety and Health Administration (OSHA) permissible exposure limit (29 CFR 1910.1000, Table Z).
AEL - Airborne Exposure Limit.
TLV - American Conference of Governmental Industrial Hygiene (ACGIH) threshold limit value—TWA.
REL - National Institute for Occupational Safety and Health (NIOSH) recommended exposure limit.
[f]IDLH (NIOSH)—Immediately dangerous to life or health (NIOSH). Represents the maximum concentration from which, in the event of respirator failure, one could escape within 30 minutes without a respirator and without experiencing any escape-impairing or irreversible health effects.
NE - No evidence could be found for the existence of an IDLH (NIOSH Pocket Guide to Chemical Hazards, Pub. No.2005-149, 2014).
C - Ceiling limit value which should not be exceeded at any time.
Ca - Carcinogen.
NA - Not applicable.
? - Unknown.
LEL - Lower explosive limits.
LC_{50} - Lethal concentration for 50 percent of population tested.
LD_{50} - Lethal dose for 50 percent of population tested.
NIC - Notice of intended change (ACGIH).

References:

American Conference of Governmental Industrial Hygienists Guide to Occupational Exposure Values, 2014, compiled by the American Conference of Governmental Industrial Hygienists.
Amoore, J. E. Hautula, "Odor as an Aid to Chemical Safety," Journal of Applied Toxicology, 1983.
Clayton, George D., Clayton, F. E., Patty's Industrial Hygiene and Toxicology, 3rd ed., John Wiley & Sons, New York.
Documentation of TLVs and BEIs, American Conference of Governmental Industrial Hygienists, 2015.
Fazzuluri, F. A., Compilation of Odor and Taste Threshold Values Data, American Society for Testing and Materials, 1978.
Gemet, L. J. Van, Compilation of Odor Threshold Values in Air and Water, CIVO, Netherlands, 1977.
Gemet, L. J. Van, Compilation of Odor Threshold Values in Air and Water, Supplement IV, CIVO, Netherlands, 1977.
Lewis, Richard J., Sr., 1992, Sax's Dangerous Properties of Industrial Materials, 8th ed., Van Nostrand Reinhold, New York.
Micromedex Tomes Plus (R) System, 1992, Micromedex, Inc.
National Institute for Occupational Safety and Health Pocket Guide to Chemicals, Pub. 2005 No. 2005-149, National Institute for Occupational Safety and Health.
Odor Threshold for Chemicals with Established Occupational Health Standards, American Industrial Hygiene Association, 1989.
Respirator Selection Guide, 3M Occupational Health and Safety Division, 2015.
Verschuseren, K., Handbook of Environmental Data on Organic Chemicals, Van Nostrand and Reinhold, 1977.
Warning Properties of Industrial Chemicals—Occupational Health Resource Center, Oregon Lung Association.
Workplace Environmental Exposure Levels, American Industrial Hygiene Association, 1992.

Table 4-1

Action Levels
Corrective Measures Implementation
MSFC-027
Redstone Arsenal, Madison County, Alabama

When in Level C PPE

Analyte	Action Level[a]	Required Action
VOCs	≥ 200 ppm above background in BZ	Stop work, evacuate work area; contact HSM [b].
Oxygen	≥ 20%, <23%	Normal operations.
	< 20%, >23%	Stop work, evacuate work area; contact HSM [b].
Flammable vapors	≥ 10% LEL	Stop work, evacuate work area; contact HSM [b].
	< 10% LEL	Continue operations, monitor for VOCs.
Respirable dust	10 mg/m^3	Stop work and thoroughly wet on-site source location.

When in Level D Modified/D PPE

Analyte	Action Level[a]	Required Action[b]
VOCs	≥ 25 ppm above background in BZ	Stop activities, suspend work activities for 15 to 30 minutes; if readings are sustained, then upgrade to Level C PPE; contact HSM [b].
Oxygen	≥ 20%, <23%	Normal operations.
	< 20%, >23%	Stop work, evacuate work area; contact HSM.
Flammable vapors	≥ 10% LEL	Stop work, evacuate work area; contact HSM [b].
	< 10% LEL	Continue operations, monitor for VOCs.
Respirable dust	≥ 2.5 mg/m^3	Stop work and thoroughly wet on-site source location.

When in Support Zone

Analyte	Action Level[a]	Required Action
VOCs	≥ 5 ppm above background in BZ	Evacuate support zone and re-establish perimeter of exclusion zone.
Respirable dust	≥ 2.5 mg/m^3	Stop work and thoroughly wet on-site source location.

[a] Four instantaneous peaks in any 15-minute period or a sustained reading for 5 minutes in excess of the action level will trigger a response.
[b] Contact with the HSM must be made prior to continuance of work. The HSM may then initiate perimeter/integrated air sampling along with additional engineering controls.

< - Less than.
≥ - Greater than or equal to.
> - Greater than.
BZ - Breathing zone.
HSM - Health and safety manager.
LEL - Lower explosive limit.
PPE - Personal protective equipment.
ppm - Parts per million.
VOC - Volatile organic compound.

No one is permitted to downgrade levels of PPE without authorization from the HSM.

Table 4-2

Air Monitoring Frequency and Location
Corrective Measures Implementation
MSFC-027
Redstone Arsenal, Madison County, Alabama

Work Activity	Instrument	Frequency	Location
Initial site setup and equipment staging	OV Monitor CGI	Initially for location, then periodically every 30 to 60 minutes	BZ of employees
Pre-excavation confirmation sampling	OV Monitor CGI	Continuously Continuously	BZ of employees
Contaminated soil excavation and backfill operations	OV Monitor CGI PDR	Continuously Continuously Continuously	BZ of employees BZ of employees and downwind

BZ - Breathing zone.
CGI - Combustible gas indicator.
OV - Organic vapor.
PDR - Aerosol monitor.

Table 5-1

Activity Hazard Analysis
Corrective Measures Implementation
MSFC-027
Redstone Arsenal, Madison County, Alabama

Activity	Potential Hazards	Recommended Controls
Staging Equipment and General Field Activities	Slip, trip, and fall hazards	• Determine best access route before transporting equipment. • Practice good housekeeping; keep work area picked up and clean as feasible. • Continually inspect the work area for slip, trip, and fall hazards. • Look before you step; ensure safe and secure footing. • Wear footwear that is appropriate to the task.
	Failure to properly plan daily activities	• A Job Safety Analysis (JSA) shall be prepared by the crew prior to commencing daily activities. The JSA shall be used as a component of the morning Tailgate Safety Meeting. The JSA shall be revised at any time throughout the workday when new tasks are initiated, unforeseen circumstances arise, or if working conditions change. Personnel shall implement Hazard Assessment Resolution Process and Safety Step Back. Personnel to conduct focused and leading indicator "I CARE" observations.
	Heavy lifting	• Use proper lifting techniques. Lifts greater than 50 pounds require assistance or mechanical equipment.
	Falling objects	• Stay alert and clear of materials suspended overhead; wear hard hat and steel-toed boots.
	Flying debris, dirt, dust, etc.	• Wear safety glasses/goggles; ensure that eye wash is in proper working condition.
	Pinch points	• Keep hands, fingers, and feet clear of moving/suspended materials and equipment. • Beware of contact points. • Stay alert at all times!
	Cuts/bruises	• Use cotton or leather work gloves for material handling. • Use cut resistant gloves when required to handle sharp objects.
	Bees, spiders, and snakes	• Inspect work area carefully and avoid placing hands and feet into concealed areas.
	Ticks	• Wear light-colored clothing (to see ticks better). • Mow vegetated and small brush areas. • Wear insect repellant. • Wear long sleeves and long pants. • Visually check oneself promptly and frequently after exiting the work area.
	Fire	• Fire extinguishers shall be suitably placed, distinctly marked, readily accessible, and maintained in a fully charged and operable condition. • All earth moving machinery shall be equipped with at least one CO_2 or dry chemical fire extinguisher with an minimum rating 10-B:C. • Employees shall be trained in the use of either CO_2 or dry chemical fire extinguishers.

Table 5-1

Activity Hazard Analysis
Corrective Measures Implementation
MSFC-027
Redstone Arsenal, Madison County, Alabama

Activity	Potential Hazards	Recommended Controls
Staging Equipment and General Field Activities (continued)	Hazard communication	• Label all containers as to contents and hazard warning, and dispose of properly. • Ensure Safety Data Sheets (SDS) are available for hazardous chemicals used on site.
	Noise	• Sound levels above 85 decibels (dBA) mandates hearing protection.
	Lighting	• Adequate lighting will be provided to ensure a safe working environment.
	Cold stress	• Workers should wear insulated clothing when temperatures drop below 40 degrees Fahrenheit (°F). • Drink warm beverages on breaks. Refrain from drinking caffeinated beverages. • Remove wet clothing promptly. • Take breaks in warm areas. • Reduce work periods as necessary. • Layer work clothing.
	Poison ivy/oak/sumac	• Avoid plant areas if possible. • Wear long sleeves and long pants. • Promptly wash clothing that has contacted poisonous plants. • Wash affected areas immediately with soap and water.
	Heat rash	• Keep the skin clean and dry. • Change perspiration-soaked clothing, as necessary. • Bathe at end of work shift or day. • Apply powder to affected area.
	Heat cramps	• Drink plenty of cool fluids even when not thirsty. • Provide cool fluid for work crews. • Move victim to shaded, cool area.
	Heat exhaustion	• Conduct physiological worker monitoring (i.e., heart rate, oral temperature) when working in ambient air temperatures exceeding 90°F (78°F if wearing impermeable clothing). • Set up work/rest periods. • Use the “buddy system.” • Allow workers time to acclimate. • Have ice packs available for use. • Take frequent breaks.
	Heat stroke	• Evaluate possibility of night work. • Perform physiological monitoring on workers during breaks. • Wear body cooling devices.

Table 5-1

Activity Hazard Analysis
Corrective Measures Implementation
MSFC-027
Redstone Arsenal, Madison County, Alabama

Activity	Potential Hazards	Recommended Controls
Staging Equipment and General Field Activities (continued)	Contact with moving equipment/vehicles	• Work area will be barricaded/demarcated. • Equipment will be laid out in an area free of traffic flow. • Wear Class 3 ANSI/ISEA high visibility apparel when subject to moving equipment and vehicle hazards. • Barricades shall be used on or around work areas when it is necessary to prevent the inadvertent intrusion of pedestrian traffic. • Barriers shall be used to protect workers from vehicular traffic. • Barriers shall be used to guard excavations adjacent to streets or roadways. • Flagging shall be used for the short term (less than 24 hours) to identify hazards until proper barricades or barriers are provided. • Heavy equipment shall have backup alarms.
	Operation of motor vehicles and trucks - general.	• All company owned, leased, or rented vehicle operations shall comply with the requirements of CB&I Federal Services, “Commercial & Non-commercial Vehicle Use.” • All company owned, leased, or rented commercial vehicle operations shall comply with the requirements of, CMS-710-02-PR-03900 “Commercial Motor Vehicle Safety.” • Subcontractors operating motor vehicles shall comply with all federal, state, and local traffic regulations. • Subcontractors shall only use vehicles, which are in good condition and safe to operate. • Subcontractors shall inspect vehicles routinely used on a weekly basis and submit the inspection documentation to the Site Safety and Health Officer. • All personnel shall drive defensively, take adequate rest breaks, and wear seat belts while vehicles are in motion. • Use a spotter to help guide vehicles through tight areas.
	Operation of motor vehicles and trucks – backing.	• Back into parking spaces upon arrival, whenever possible. • Walk around the vehicle before backing to identify any new conditions or obstructions. • Set out orange cone system to require truck operator to walk around truck and collect cone(s) prompting area inspection prior to moving truck. • Use a spotter when backing whenever possible. • Understand hand signals. • Sound horn prior to backing. • Check the rear-view and side mirrors prior to backing. (Note: All vehicles, other than automobiles, should have small convex mirrors attached to the side mirrors.) • Back slowly in areas of obstructed vision. • Anticipate others who may be backing out into your pathway and adjust accordingly.

Table 5-1

Activity Hazard Analysis
Corrective Measures Implementation
MSFC-027
Redstone Arsenal, Madison County, Alabama

Activity	Potential Hazards	Recommended Controls
Staging Equipment and General Field Activities (continued)	Operation of motor vehicles and trucks – speeding.	• Obey all posted speed limits. • Radar detectors are prohibited in all CB&I company owned, leased, or rented vehicles. • Reduce travel speed during hazardous conditions (e.g., rain, fog, and snow). Maintain 2 seconds between vehicles under normal conditions; maintain 3 seconds behind motorcycle; 7 seconds pulling a trailer behind a semi-truck; and 6 seconds behind a semi-truck, no trailer; add additional seconds for rain, fog, etc. • Determine whether your vehicle has anti-lock brakes. If it does, read the operators manual to determine how to use them properly. Test the brakes on a wet roadway so that you will know how they perform under emergency conditions. • Always leave yourself an “out” during travel. • When stopping, make sure that you leave enough distance between you and the car in front of you. You should be able to see the rear tires of the vehicle in front, when stopped. • When at a red light, and it turns green, use the “delayed start” technique, by counting to three before you take your foot off the brake. • DO NOT TAILGATE.
	Operation of motor vehicles and trucks – blind spots.	• Become familiar with any blind spots associated with your vehicle. • Adjust mirrors properly. • Make sure you use your directional signals. • Always look over your shoulder to ensure that the lane is clear when changing lanes. • Become extra cautious when approaching other drivers’ blind spots.
	Operation of motor vehicles and trucks – vehicle loading.	• Do not overload the vehicle. • Secure all equipment within the body of the vehicle. • Do not block side view mirrors with load. • Do not transport U.S. Department of Transportation manifested hazardous materials without a commercial driver’s license with appropriate endorsements. All hazardous material shipments must have prior approval from the Project Manager and Health and Safety Manager. • Vehicles carrying loads that project beyond the sides of rear of the vehicle shall carry a red flag not less than 44 square inches at or near the end of the projection. • Dispatch all equipment and personnel with proper forms and identification.

Table 5-1

Activity Hazard Analysis
Corrective Measures Implementation
MSFC-027
Redstone Arsenal, Madison County, Alabama

Activity	Potential Hazards	Recommended Controls
Staging Equipment and General Field Activities (continued)	Operation of motor vehicles and trucks – equipment failure.	• Perform required inspections of your vehicle. • Any vehicle with mechanical defects that may endanger the safety of the driver, passengers or the public shall not be used. • Verify that safety equipment is in the vehicle. Safety equipment should include a spare tire, jack, first aid kit, fire extinguisher, and flashlight. • Flares and/or reflective triangles should be available in larger trucks. • Ensure that the proper documentation is in the vehicle. Documentation should include an operations manual for the vehicle, insurance card, vehicle registration, and accident report forms.
	Operation of motor vehicles and trucks – influenced by drug and alcohol.	• Never drive under the influence of drugs or alcohol. • Conviction of DUI/DWI will result in loss of driving authorization on company business and possibly your employment with CB&I.
Utility Clearances	Contact with utilities	• All overhead and subsurface utilities shall be identified, isolated, and removed from service prior to initiation of construction. • CMS-710-02-PR-01610, *Identifying Underground Installations,* sall be followed. • Temporary electrical disconnects shall be performed under strict lock-out-tag-out procedures as specified in the APP.
Clearing and grubbing	Unexploded ordnance (UXO)	• Do not handle or disturb suspect items. • Remember the potential for chemical agents exist with UXO until confirmed by designated authorities. • UXO stand-by support will be on call in the event suspect MEC items are encountered.
	Slip, trip, and fall hazards	• Determine best access route before transporting equipment. • Continually inspect the work area for slip, trip, and fall hazards. • Look before you step, ensure safe and secure footing.
	Heavy lifting	• Use proper lifting techniques. Lifts greater than 60 pounds require assistance or mechanical equipment.
	Falling objects	• Stay alert and clear of materials suspended overhead; wear hard hat and steel-toed boots.
	Pinch points	• Keep hands, fingers, and feet clear of moving/suspended materials and equipment. • Beware of contact points. • Stay alert at all times!
	Snakes	• Inspect work area carefully and avoid placing hands and feet into concealed areas. • Wear snake chaps when walking through heavy vegetated areas.

Table 5-1

Activity Hazard Analysis
Corrective Measures Implementation
MSFC-027
Redstone Arsenal, Madison County, Alabama

Activity	Potential Hazards	Recommended Controls
Clearing and grubbing (continued)	Stings from bees, wasps, ants	• Identify infested areas to the site supervisor. • Workers who are allergic or capable of allergic reactions to bee, wasp, or ant stings or bites shall notify their supervisor(s). • Evaluate need for sensitive workers to have prescribed antibiotic or medicine to combat onset of symptoms.
	Unattended worker	• Use “Buddy System” – visual contact will be maintained with the team members during clearing activities.
	Operation of chain saw	• Wear protective equipment, including a hard hat, safety glasses and face shield (logging shield), gloves that provide a good grip, hearing protectors, safety shoes, protective leggings (chain saw chaps), and trim fitting clothes that won't get caught in the chain. • Do not touch the tip of the guide bar to any object. • Before sawing through a branch or log, check for nearby branches that could come in contact with the saw. • Do not bury the tip in a cut, and don't remove the top guard to make a bigger cut. • Hold the saw firmly with both hands, and keep your arm straight so in case of a kickback, the saw will rise in front of you instead of back into you. Never hold a running saw with one hand; that provides the saw with an easy pivot point if it jerks back. • Avoid cutting tree limbs above mid chest high. • Keep the saw sharp; that way it's more likely to cut through a log and less likely to catch on it. • Make sure to use the right chain saw for the job. The owner's manual should explain the capabilities. • Do not work alone. • Always start the saw according to the manual's directions. Carry the saw with the blade pointing backwards when not in use, and never carry a running saw. • Stand to the side so you won't follow through into your leg, and so it will fly past you if it kicks back. Always be aware of what is in the saw's downward path after the cut. • Stand on the uphill side of a log so it won't roll into you. Watch for branches that may spring back as you cut. • Let the saw do the work; do not force it through a cut. • Prior to refueling a gasoline-powered saw, let it cool first, and clean up any spills. Avoid the hot muffler. • If the saw is electric, use an extension cord that's approved for outdoor use, and do not use the saw in a damp environment. • Do not cut trees that involve climbing the trees. • Keep an eye out for widow-makers. These are limbs that get temporarily lodged up in trees when falling from another tree. Once a tree is cut down, always inspect nearby trees for loose limbs or widow-makers.

Table 5-1

Activity Hazard Analysis
Corrective Measures Implementation
MSFC-027
Redstone Arsenal, Madison County, Alabama

Activity	Potential Hazards	Recommended Controls
Clearing and grubbing (continued)	Operation of bushhog	• Use qualified and trained bushhog operator. • Keep employees out of the bushhog work area. • Keep pathways and work areas free of obstruction. • Do not bushhog too close to trees.
	Lightning strikes	• Whenever possible, halt activities and take cover. • Limit the body surface area that is in contact with the ground (i.e., kneeling on one knee is better than laying on the ground). • Seek shelter in a building if possible. • Stay away from windows. • If available, crouch under a group of trees instead of one single tree. • Keep 6 feet away from tree trunk if seeking shelter beneath tree(s). • If in a group, keep 6 feet of distance between people.
Soil removal/disposal	Heavy equipment operations	• Only qualified, trained, and authorized personnel will operate heavy equipment. • Before any machinery or mechanized equipment is placed into service, it shall be inspected and tested by a competent mechanic and certified to be in safe operating condition. • Equipment shall be inspected before being placed into service and at the beginning of each shift. • Preventive maintenance procedures recommended by the manufacturer shall be followed. • All lockout/tagout procedures shall be used for equipment found to be faulty or undergoing maintenance. • Machinery and mechanized equipment shall be operated only by designated personnel. • Getting off or on any equipment while it is in motion is prohibited. • Machinery or equipment requiring an operator shall not be permitted to run unattended. • Machinery or equipment will not be operated in a manner that will endanger persons or property nor will the safe operating speeds or loads be exceeded. • All machinery or equipment will be shut down and positive means taken to prevent its operation while repairs or manual lubrications are being done. • All repairs on machinery or equipment will be made at a location that provides protection from traffic for repair persons. • Bulldozer and scraper blades, end-loader buckets, and similar equipment will be either fully lowered or blocked when being repaired or when not in use. • All self-propelled construction equipment shall be equipped with a back-up alarm.
	Exposure to volatile organic compound (VOC) vapors	• Continuous air monitoring for VOC and combustible gas will be performed during soil disturbance activities to verify the absence of potential VOC..

Table 5-1

Activity Hazard Analysis
Corrective Measures Implementation
MSFC-027
Redstone Arsenal, Madison County, Alabama

Activity	Potential Hazards	Recommended Controls
Soil removal/disposal (continued)	Falling objects	• Hard hats will be required for all personnel. • Never walk under suspended loads. Stay clear of material suspended overhead. • Barricade/tape area within swing radius of excavator.
	Cross-contamination and contact with potentially contaminated materials	• Wear proper protective clothing (Modified Level D) and equipment to safeguard against potential contamination. • Avoid skin contact with materials. • Only essential personnel will be in the work area. • All personnel will follow good hygiene practices. • Proper decontamination procedures will be followed. • All liquids and materials used for decontamination will be contained and disposed of in accordance with federal, state, and local regulations.
	Noise	• Sound levels above 85 dBA mandates hearing protection.
	Faulty or damaged equipment	• Equipment shall be inspected before being placed into service and at the beginning of each shift. • Preventive maintenance procedures recommended by the manufacturer shall be followed. • A lock-out/tag-out procedure shall be used for equipment found to be faulty or undergoing maintenance.
	Contact with utilities	• All utilities shall be located and marked prior to excavation operations.
	Dump truck operations	• Dump truck bodies shall be fully lowered or blocked when maintenance is being performed or when not in use. • Dump trucks will have back-up alarms and elevated dump body indicator. • A signal person will be used when the point of operation is not in full view of the vehicle, machine or equipment operator; vehicles are backed more than 100 ft; terrain is hazardous; or 2 or more vehicles are backing in the same area. • Dump trucks will not be loaded in a manner that obscures the operator's view ahead or to either side or that interferes with the safe operation of the vehicle. • The load on every truck will be distributed, checked, tied down, or secured. • Loads will be covered when there is a hazard of flying/falling dirt, rock, debris, or material. • All dump trucks will be equipped with a holding device to prevent accidental lowering of the body. • All hoist levers will be secured to prevent accidental starting or tripping of the mechanism. • Trip handles for tailgates will be arranged to keep the operator in the clear.

Table 5-1

Activity Hazard Analysis
Corrective Measures Implementation
MSFC-027
Redstone Arsenal, Madison County, Alabama

Activity	Potential Hazards	Recommended Controls
Soil removal/disposal (continued)	Property damage	• Visual surveys of road conditions, structures and load capacities shall be performed where dump truck operate. • Off road operating areas shall be surveyed for utility infrastructure i.e., valve boxes, man holes, etc. • Adequate barricades or flagging shall be used to prevent utility from damage by truck operations. • Trucks shall observe all RSA motor vehicle operating requirements.
	Struck by	• Personnel shall wear high visibility ANSI/ISEA Class III vest when working near moving equipment. • Truck drivers shall be instructed not to back until signaled to do so by designated spotter. • Truck drivers shall remain inside vehicle during loading operations. • Material shall not be swung over the cab of the dump truck during loading activities. • Ground personnel shall stay well clear of dump trucks during loading and dumping
	Hydraulic leaks	• Trucks with observed hydraulic leaks shall be removed from site until repaired. • Any lubricant or fuel related leaks shall be repaired immediately.
	Excavation	• Excavation area shall be barricaded to warn personnel and establish exclusion zone. • Excavation competent person shall inspect work area as often as necessary to ensure employee safety. • Spoil shall be cast as far as possible away from removal action. Sloping shall occur as needed for maintaining platform integrity. • Excavations shall be backfilled as soon as possible.
Loading excavated material for disposal	Loading equipment and materials	• All required U.S. Department of Transportation weight restrictions are applicable for operations on government facilities and installations. • Equipment and materials shall be properly contained, covered if required, and secured during transit. • Do not swing suspended materials over cabs of occupied trucks or personnel. • Avoid placing yourself opposite side from truck loading operations, operator cannot see you and material can fall outside bed of trucks.

Table 5-1

Activity Hazard Analysis
Corrective Measures Implementation
MSFC-027
Redstone Arsenal, Madison County, Alabama

Activity	Potential Hazards	Recommended Controls
Soil Boring and Sampling	Cross-contamination and contact with potentially contaminated materials	• Stop immediately at any sign of obstruction, verify no utilities have been missed in the initial sweep. • Sampling technicians will wear proper protective clothing and equipment to safeguard against potential contamination. • Stay upwind of intrusive activity whenever possible. • Only essential personnel will be in the work area. • Real-time air monitoring will take place before and during sampling activities. • All personnel will follow good hygiene practices. • Proper decontamination procedures will be followed. • All liquids and materials used for decontamination will be contained and disposed of in accordance with federal, state, and local regulations.
	Faulty or damaged equipment being utilized to perform work	• All machinery or mechanized equipment will be inspected by a competent mechanic and be certified to be in safe operating condition. • Equipment will be inspected before being put to use and at the beginning of each shift. • Faulty/unsafe equipment will be tagged and if possible locked out. • Drill rigs shall be equipped with reverse signal alarm, backup warning lights, or the vehicle is backed up only when an observer signals it is safe to do so.
	Uneven terrain, poor ground support, inadequate clearances, contact with utilities	• Inspections or determinations of road conditions and structures shall be made in advance to ensure that clearances and load capacities are safe for the passage or placing of any machinery or equipment. • All mobile equipment and areas in which they are operated shall be adequately illuminated. • Aboveground and belowground utilities will be located and avoided prior to staging equipment in accordance with HS308. • Whenever the equipment is parked, the parking brake shall be set. • Equipment parked on inclines will have the wheels chocked. • Inspect brakes and tire pressure on drill rig before staging for work.
	Unattended worker	• Use "buddy system" - visual contact will be maintained with the sampling technician during sampling activities.
	Overhead hazards	• Make sure no obstacles are within radius of boom. Always stay a safe distance from power lines. • Keep 25 feet from power lines.
	Inexperienced operator	• Machinery and mechanized equipment shall be operated only be designated personnel. • Operators shall inform their supervisor(s) of any prescribed medication that they are taking that would impair their judgment.
	Jacks/outriggers	• Ensure proper footing and cribbing.

Table 5-1

Activity Hazard Analysis
Corrective Measures Implementation
MSFC-027
Redstone Arsenal, Madison County, Alabama

Activity	Potential Hazards	Recommended Controls
Soil Boring and Sampling (continued)	Pinch points	• Keep feet and hands clear of moving/suspended materials and equipment. • Stay alert at all times! • Utilize hand protection when exposed to pinch point operations/activities.
	Drum handling	• Be careful not to breathe air from around open drum any more than necessary. Monitor with photoionizaton detector/flame ionization detector (PID/FID) equipment and upgrade to respirator if necessary. • When filling a drum (with either soil or water), be careful not to make contact with the contained waste. Wear appropriate gloves. Make sure lid or bung of drum is secure. • If moving a drum unassisted, be sure to leverage properly, use proper lifting techniques, and wear safety glasses and steel-toed boots. • When using a drum dolly, make sure straps and lid catch are securely attached. Leverage properly when tilting drum. Be sure toes stay away from drum.
	Cut hazards	• Use care when handling glassware. • Wear adequate hand protection.
	Slip, trip, and fall hazards	• Site workers will be required to wear hard hat, safety glasses with side shields, work gloves, and steel toe/shank boots when working in the field. • Whenever possible, avoid routing cords and hoses across walking pathways. • Flag or cover inconspicuous holes to protect against falls.
	Hazard communication	• Label all containers as to contents and hazard warning, and dispose of properly. • Ensure Material Safety Data Sheets (MSDS) are available for hazardous chemicals used on site.
	Poison ivy/oak/sumac	• Avoid plant areas if possible. • Wear long sleeves and long pants. • Promptly wash clothing that has contacted poisonous plants. • Wash affected areas immediately with soap and water.
	Cold stress	• Workers should wear insulated clothing when temperatures drop below 40°F. • Drink warm beverages on breaks. Refrain from drinking caffeinated beverages. • Remove wet clothing promptly. • Take breaks in warm areas. • Reduce work periods as necessary. • Layer work clothing.

Table 5-1

Activity Hazard Analysis
Corrective Measures Implementation
MSFC-027
Redstone Arsenal, Madison County, Alabama

Activity	Potential Hazards	Recommended Controls
Soil Boring and Sampling (continued)	Access/egress hazards	• Use qualified and trained bushhog operator. • Keep employees out of the bushhog work area. • Utilize good housekeeping practices. • Keep aisle ways, pathways, and work areas free of obstruction. • Clean ice or snow off of walkways or work stations. • Use appropriate footwear for the task assigned.
	Heat rash	• Keep the skin clean and dry. • Change perspiration-soaked clothing, as necessary. • Bathe at end of work shift or day. • Apply powder to affected area.
	Heat cramps	• Drink plenty of cool fluids even when not thirsty. • Provide cool fluid for work crews. • Move victim to shaded, cool area.
	Heat exhaustion	• Conduct physiological worker monitoring (i.e., heart rate, oral temperature) when working in ambient air temperatures exceeding 90°F (78°F if wearing impermeable clothing). • Set up work/rest periods. • Use the buddy system. • Allow workers time to acclimate. • Have ice packs available for use. • Take frequent breaks.
	Heat stroke	• Evaluate possibility of night work. • Perform physiological monitoring on workers during breaks. • Wear body cooling devices.
	Lightning strikes	• Halt activities and take cover. • If outdoors, stay low to the ground. • Limit the body surface area that is in contact with the ground (i.e., kneeling on one knee is better than lying on the ground). • Seek shelter in a building if possible. • Stay away from windows. • If available, crouch under a group of trees instead of one single tree. • Keep all body parts in contact with the ground as close as possible. • If in a group, keep 6 feet of distance between people.

Table 5-1

Activity Hazard Analysis
Corrective Measures Implementation
MSFC-027
Redstone Arsenal, Madison County, Alabama

Activity	Potential Hazards	Recommended Controls
	Bees, spiders, and snakes	• Workers shall inspect the work area carefully and avoid placing hands and feet into concealed areas. • Evaluate need for sensitive workers to have prescribed antibiotic or medicine to combat onset of symptoms.
High-Pressure Water Jetting Operations	Fueling	• Only approved safety cans shall be used to store fuel. • Do not refuel equipment while it is operating. • Fire extinguishers shall be suitably placed, distinctly marked, readily accessible, and maintained in a fully charged and operable condition.
	Faulty or damaged equipment	• Equipment shall be inspected before being placed into service and at the beginning of each shift. • Preventive maintenance procedures recommended by the manufacturer shall be followed. • A lockout/tagout procedure shall be used for equipment found to be faulty or undergoing maintenance.
	High-pressure water	• Jetting gun operator must wear appropriate PPE including hard hat, impact-resistant safety glasses with side shields, water-resistant clothing, metatarsal guards for feet and legs, and hearing protection (if appropriate). • One standby person shall be available within the vicinity of the pump during jetting operation. • The work area shall be isolated and adequate barriers will be used to warn other site personnel.
	Unqualified operators	• Only qualified and trained personnel are permitted to operate machinery and mechanized equipment associated with water jet cutting and cleaning.
	Out of control equipment	• No machinery or equipment is permitted to run unattended. • Machinery or equipment will not be operated in a manner that will endanger persons or property nor will the safe operating speeds or loads be exceeded.
	Noise	• Sound levels above 85 dBA mandates hearing protection by nearby site personnel.
	Activation during repairs	• All machinery or equipment will be shut down and positive means taken to prevent its operation while repairs or manual lubrications are being done.
	Pinch points	• Keep feet and hands clear of moving/suspended materials and equipment. • Stay alert and clear of materials suspended.
	Falling objects	• Hard hats are required by site personnel. • Stay alert and clear of material suspended overhead.
	Flying debris	• Impact-resistant safety glasses with side shields are required.
	Contact with potentially contaminated materials	• All site personnel will wear the appropriate PPE. • Decontamination liquid and solids will be properly contained and disposed.

Table 5-1

Activity Hazard Analysis
Corrective Measures Implementation
MSFC-027
Redstone Arsenal, Madison County, Alabama

Activity	Potential Hazards	Recommended Controls
Moving and Shipping Collected Samples	Heavy lifting	• Use proper lifting techniques. Lifts greater than 60 pounds require assistance or mechanical equipment; size up the lift.
	Pinch points	• Keep hands, fingers, and feet clear of moving/suspended materials and equipment. • Beware of contact points. • Stay alert at all times!
	Cut hazards	• Wear adequate hand protection. Use care when handling glassware.
	Hazard communication	• SDSs shall be obtained for chemicals brought on site. • Label all containers as to contents and hazard warning, and dispose of properly.
Material Storage	Flammable and combustible liquids	• Store in NO SMOKING AREA. • Fire extinguisher readily available. • Transfer only when properly grounded and bonded.

FIGURES

Figure 1

Typical HAZWOPER Site Controls

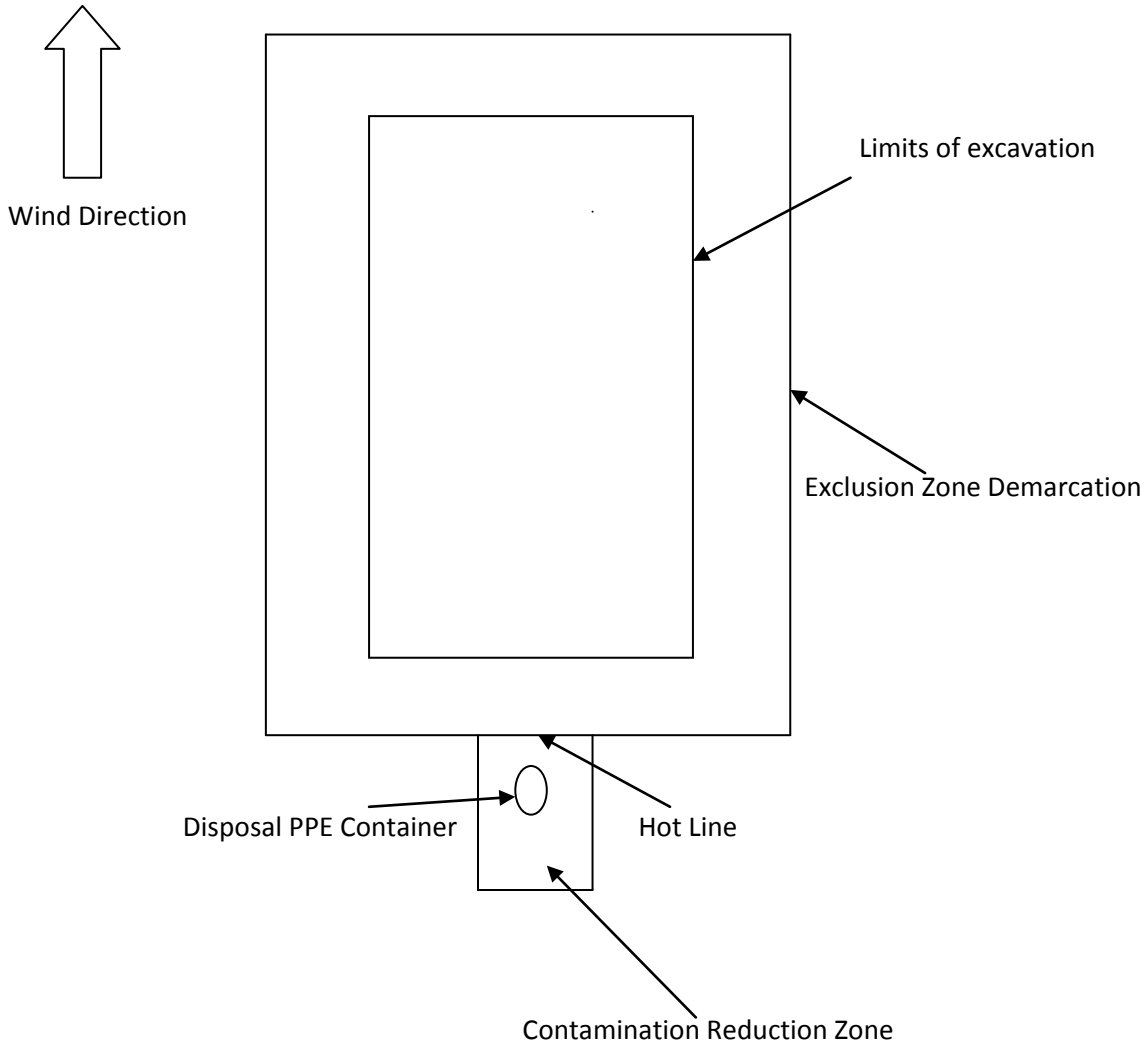

Notes: Typical HAZWOPER site controls will vary to site-specific conditions.
Exclusion zone demarcation may consist of flagging, barricade tape, fencing or other suitable visible barrier.
Exclusion zone will be large enough to accommodate earth moving machinery and sampling equipment.

FIGURE 2

MSFC-27 Hospital Route Map

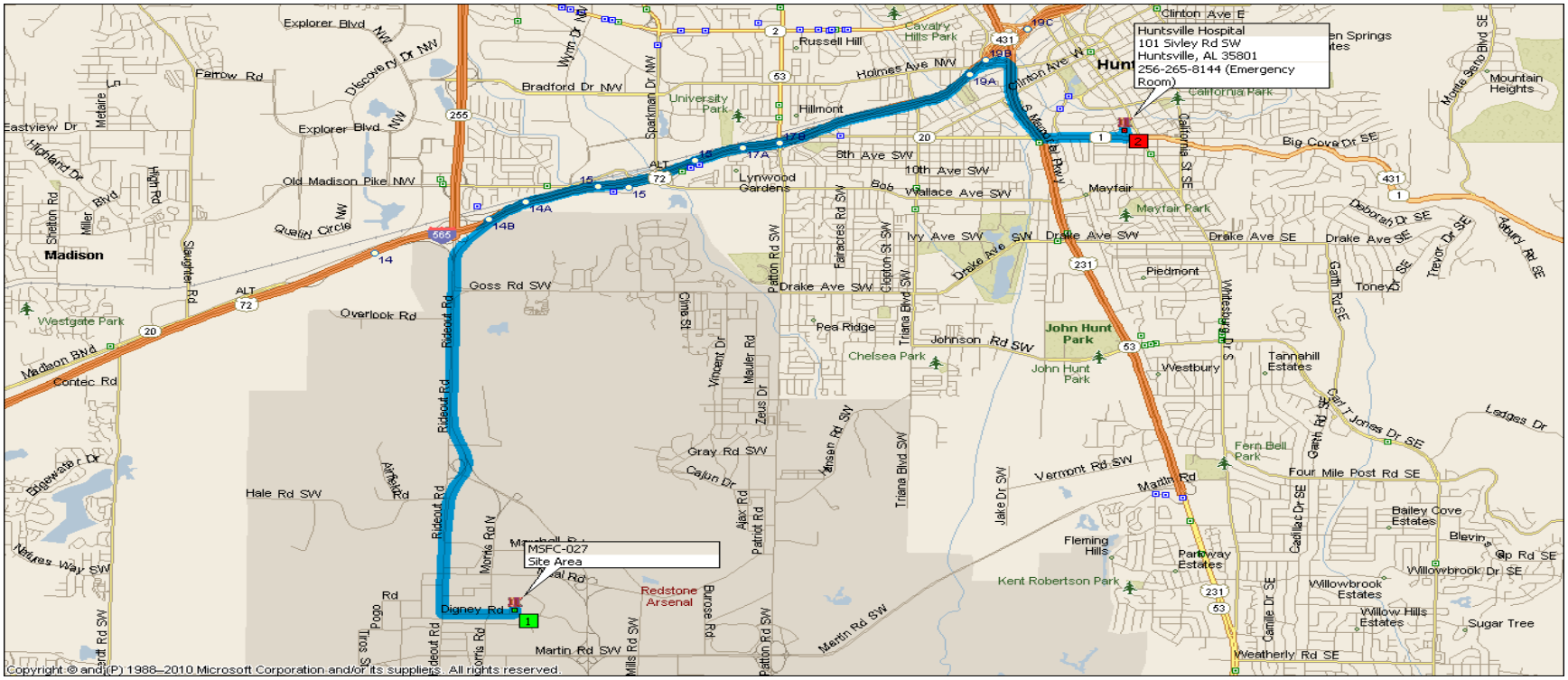

Mile	Instruction	For	Toward
0.0	**Depart MSFC-027 on Local road(s) (South)**	**76 yds**	
0.1	Turn RIGHT (West) onto Digney Rd	0.6 mi	
0.6	Turn RIGHT (North) onto Rideout Rd	3.5 mi	
4.1	Take Ramp (RIGHT) onto I-565 [US-72 ALT]	4.4 mi	I-565 E
8.5	At exit 19A, take Ramp (RIGHT) onto US-231 [US-431]	0.8 mi	US-231 S / US-431 S / Memorial Pkwy
9.3	Keep STRAIGHT onto Ramp	98 yds	US-431 S / SR-53 N / SR-20 / Governors Dr
9.4	Road name changes to US-431 [SR-1]	0.3 mi	
9.6	Turn LEFT to stay on US-431 [SR-1]	0.7 mi	
10.3	Turn LEFT (North) onto Gallatin St SW	142 yds	
10.4	**Arrive Huntsville Hospital [101 Sivley Rd SW, Huntsville, AL 35801]**		

SUMMARY

Driving distance: 10.4 miles
Trip duration: 14 minutes
Driving time: 14 minutes

FIGURE 3

MSFC-27 Crestwood Family Practice Clinic Route Map

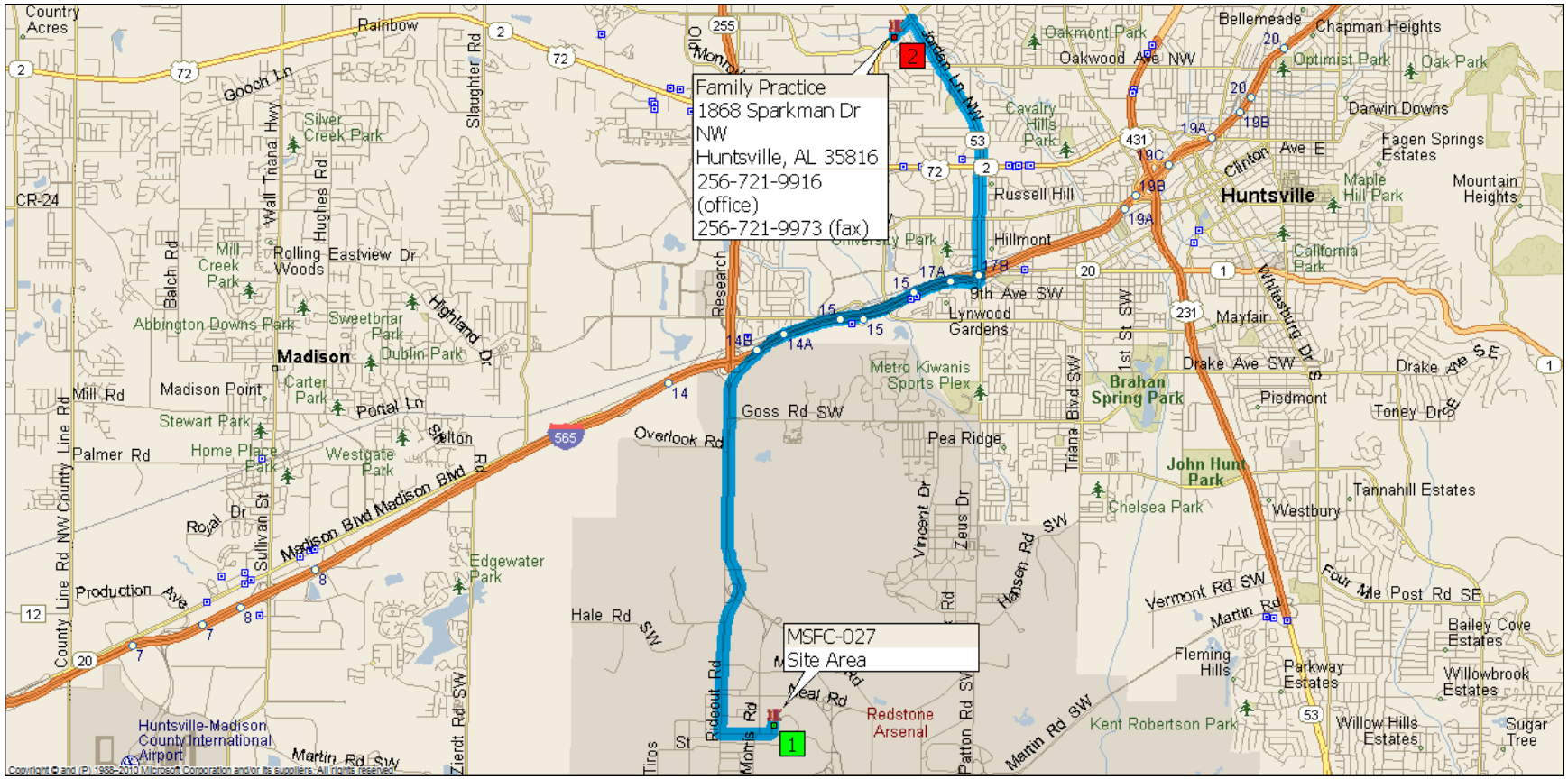

Mile	Instruction	For	Toward
0.0	**Depart MSFC-027 on Local road(s) (South)**	**142 yds**	
0.1	Turn RIGHT (West) onto Digney Rd	0.5 mi	
0.6	Turn RIGHT (North) onto Rideout Rd	3.5 mi	
4.1	Take Ramp (RIGHT) onto I-565 [US-72 ALT]	2.6 mi	I-565 E
6.6	At exit 17A, turn RIGHT onto Ramp	0.2 mi	SR-53 N / Jordan Lane / US-72
6.9	Keep STRAIGHT to stay on Ramp	87 yds	
6.9	Turn LEFT (North) onto SR-53 [Jordan Ln NW]	2.8 mi	
9.7	Turn LEFT (South-West) onto Sparkman Dr NW	0.2 mi	
9.9	**Arrive Family Practice [1868 Sparkman Dr NW, Huntsville, AL 35816]**		

SUMMARY

Driving distance: 9.9 miles
Trip duration: 14 minutes
Driving time: 14 minutes

FIGURE 4

MSFC-27 Crestwood Workers Care Madison Clinic Route Map

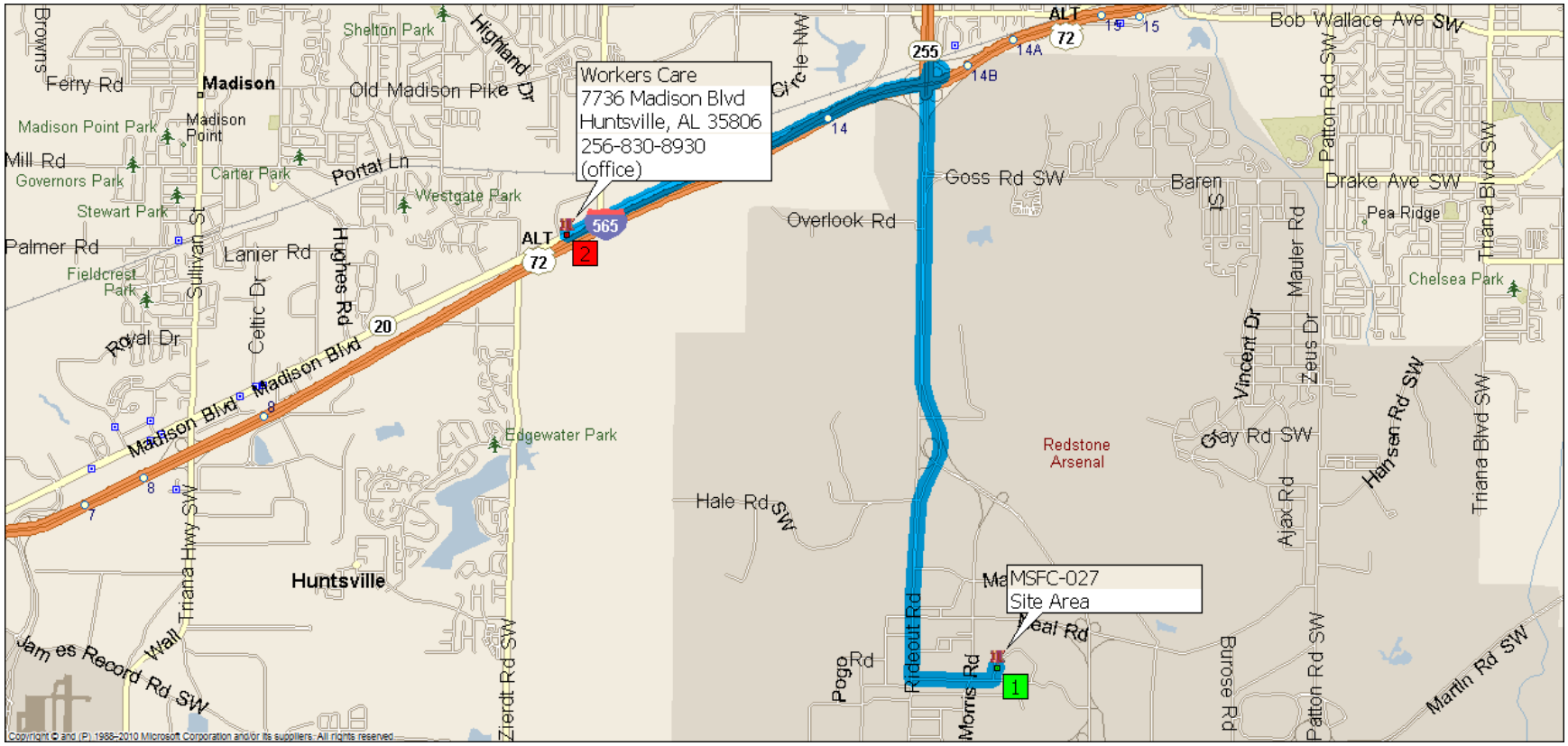

Mile	Instruction	For	Toward
0.0	**Depart MSFC-027 on Local road(s) (West)**	**32 yds**	
0.1	Turn LEFT (South) onto Local road(s)	120 yds	
0.1	Turn RIGHT (West) onto Digney Rd	0.5 mi	
0.6	Turn RIGHT (North) onto Rideout Rd	3.7 mi	
4.3	Road name changes to SR-255 [Research Park Blvd NW]	0.1 mi	
4.4	Take Ramp (RIGHT) onto I-565 [US-72 ALT]	1.0 mi	I-565 W / I-65 / Decatur / Airport
5.4	At exit 13, take Ramp (RIGHT) onto SR-20 [Madison Blvd]	1.8 mi	Madison Blvd
7.1	**Arrive Workers Care [7736 Madison Blvd, Huntsville, AL 35806]**		

SUMMARY

Driving distance: 7.1 miles
Trip duration: 11 minutes
Driving time: 11 minutes

ATTACHMENT 1

EVALUATING MEC/CWM/CA HAZARDS IN SUPPORT OF HTRW ACTIVITIES

Evaluating MEC/CWM/CA Hazards in Support of HTRW Activities

OU Number: *18* **Date:** 1/2/16 **Name of person completing form:** Doug Russell

Site Name: MSFC-027 **Title:** HSE Manager

Job Number: 500382 **Signature:** Doug Russell

	Yes	No
1a. Have the historical records available for this HTRW site been reviewed?	☒	☐

If the answer to **1a.** is yes, proceed to **1b.**
If the answer to **1a.** is no, review site information prior to completing this form.

	Yes	No
1b. Is there recent information (site walk, worker interviews, etc.) that indicates a potential MEC/CWM hazard at this site?	☐	☒

Proceed to **2**.

2. According to the records review, this site is known or suspected to have been used for:

	Yes	No
2a. Manufacturing, production, or shipping of conventional MEC:	☐	☒
Live fire testing of any conventional ordnance:	☐	☒
Conventional MEC training:	☐	☒
Storage of conventional MEC:	☐	☒
Disposal or demilitarization of conventional MEC:	☐	☒

Other (specify):

	Yes	No
2b. Manufacturing, production, or shipping of chemical agent:	☐	☒
Research or testing of chemical agent:	☐	☒
Chemical agent related training:	☐	☒
Storage of chemical agent:	☐	☒
Disposal or demilitarization of chemical agent:	☐	☒
Live fire testing of any CWM ordnance:	☐	☒

Other (specify):

Any **2a** question answered "YES" indicates UXO support is required for all site activities. If all **2a** questions are answered "NO", UXO support may not be required. Refer to Installation-Wide Accident Prevention Plan (APP) for additional information concerning UXO support. Proceed to question **2b**.

Any **2b** question answered "YES" requires the remainder of this form to be completed. If all **2b** questions are answered "NO", near real-time monitoring for chemical agent will not be required and completing the remainder of this form is not required. Refer to SSHP for additional information concerning agent monitoring.

3. For sites where the manufacturing, testing, storage, or disposal of CWM is suspected:	**Yes**	**No**
Is there evidence that the CWM is/was containerized in potentially unexploded ordnance:	☐	☐
Is there evidence that the CWM is/was containerized in nonexplosive containers:	☐	☐
Is there evidence that the CWM is open to the environment (i.e., in an open container or free liquid/solid in the soil/water):	☐	☐
Is there evidence that the CWM hazard has been removed from the site or that the site has been decontaminated:	☐	☐
Has the site been previously monitored or sampled for chemical agent or agent breakdown products:	☐	☐
For any "YES" above, was the agent or breakdown product identified?	☐	☐

For any "Yes", list types of agent (mustard, lewisite, etc.) and the form (in MEC, in drum, etc.) the CWM is expected to be found (or state "unknown"):

Agent:

List agent breakdown products identified:

Continue to page 3 of 5 -

4. Defining the Potential for the Presence of CWM:	**Agent Monitoring Requirements for Site Activities:**
4a. Frequent Presence Potential – Definition: Occurs very often, continuously experienced. CWM is known or to be present at the site in a condition (within MEC and/or nonexplosive container, or in an uncontainerized form in sufficient volume that weathering of the product has not rendered it harmless) that will cause potential harm to personnel if it is encountered.	Mandatory personal and perimeter air monitoring using the DAAMS, MINICAMS, and RTAP collection/analysis methods with off-site surety laboratory confirmation of all environmental samples. Specific monitoring criteria (equipment types and sampling station placement, percentage of personnel monitored, etc.) to be established in the Site Specific Safety and Health Plan (SSHP).
4b. Likely Presence Potential – Definition: Occurs several times. CWM is known or highly suspected to be present at the site in a condition (within MEC and/or nonexplosive container, or in an uncontainerized form in sufficient volume that weathering of the product has not rendered it harmless) that will cause potential harm to personnel if it is encountered.	Mandatory personal and perimeter air monitoring using the DAAMS, MINICAMS, and RTAP collection/analysis methods with off-site surety laboratory confirmation of all environmental samples. Specific monitoring criteria (equipment types and sampling station placement, percentage of personnel monitored, etc.) to be established in the Site Specific Safety and Health Plan (SSHP).
4c. Occasional Presence Potential - Definition: Occurs sporadically. CWM is suspected to have been present at the site, but has been previously removed and/or decontaminated, or has been open to the environment such that it is expected to have degraded and been rendered harmless.	The need for personal and perimeter air monitoring using the DAAMS, MINICAMS, and RTAP collection/analysis methods with off-site surety laboratory confirmation of all environmental samples will be reviewed on a site-by-site basis. Specific monitoring criteria (equipment types and sampling station placement, percentage of personnel monitored, etc.) to be established in the Site Specific Safety and Health Plan (SSHP).
4d. Seldom Presence Potential - Definition: Remotely possible; could occur at some time. CWM is suspected to have been present at the site, but has been previously removed and/or decontaminated, or has been open to the environment such that it is expected to have degraded and been rendered harmless.	The need for personal and perimeter air monitoring using the DAAMS, MINICAMS, and RTAP collection/analysis methods with off-site surety laboratory confirmation of all environmental samples will be reviewed on a site-by-site basis. Specific monitoring criteria (equipment types and sampling station placement, percentage of personnel monitored, etc.) to be established in the Site Specific Safety and Health Plan (SSHP).
4e. Unlikely Presence Potential – Definition: Can assume will not occur, but not impossible. No indications that CWM will be present in quantity or reactivity (in munitions, projectiles, drums, etc.).	No specific personal or area monitoring for chemical agents required beyond what is specified in the SSHP.

Continue to page 4 of 5

OU Number: 18 **Site Name: MSFC-027**

Job Number: 500382 **Date: 1/2/16**

5. Based on the information provided in questions 1 through 5, above, the following guidelines will be used for establishing PPE requirements for activities to be performed at this site; Specific details are provided in the SSHP:	
5a. High Exposure Potential - High exposure potential is determined by evaluating the potential presence of CWM in conjunction with the task(s) to be performed, as well as the specific location and duration of the task(s).	Subject to review by the CB&I health and safety manager, PPE for all personnel in the exclusion zone at a site identified as having a "High Exposure Potential" will be Level B (supplied air) or Level C (full-face NIOSH approved CBRN respirator with CBRN cartridges) and chemically resistant coveralls. Specific PPE requirements are in the SSHP for this site.
5b. Moderate Exposure Potential - Moderate exposure potential is determined by evaluating the potential presence of CWM in conjunction with the task(s) to be performed, as well as the specific location and duration of the task(s).	Subject to review by the CB&I health and safety manager, PPE for all personnel in the exclusion zone at a site identified as having a "Moderate Exposure Potential" will be Modified Level D (disposable coveralls and NIOSH approved CBRN escape respirator) carried by all personnel. Specific PPE requirements are in the SSHP for this site.
5c. Low Exposure Potential - Low exposure potential is determined by evaluating the potential presence of CWM in conjunction with the task(s) to be performed, as well as the specific location and duration of the task(s).	Subject to review by the CB&I health and safety manager, no additional PPE requirements above those stated in the SSHP are needed for sites identified as having "Low Exposure Potential." Specific PPE requirements are in the SSHP for this site.

Review of available information indicates the presence potential at this site is considered to be:
MEC No Presence Potential
CWM Unlikely Presence Potential / Low Exposure Potential
Exceptions/Explanations:

Review Signatures:
CB&I UXO Technical Manager _____ Date: 21 April 2016 CB&I H&S Specialist _____ Date: 25 April 2016

Additional Notes and Explanations:

MSFC-027 is an area of approximately 24 acres located near the center of RSA north of Digney Road and east of Rideout Road within the RSA-148 and RSA-149 groundwater sites. An ephemeral storm water drainage feature (ditch) bisects the site, entering on the northern boundary and exiting the southern boundary. The portion of MSFC-027 east of the drainage ditch is approximately 16 acres and is occupied by the buildings, parking and storage lots, and wooded areas that comprise the approximately 5.5-acre inactive waste accumulation area. Also within the inactive waste accumulation area is the National Aeronautics and Space Administration (NASA) site MSFC-081 (Paint Spray Booth). The western portion of the site (approximately 8 acres) is occupied by gravel/asphalt storage areas, buildings, NASA site MSFC-083 (Groundskeeper/Future Area 4348), and mowed grass areas. MSFC-027 is surrounded to the east, north and west by wooded areas and to the south-southwest by industrial areas (MSFC-034). Both MSFC and RSA properties bound the site. Current and future land use across MSFC-027 is categorized as “leased land/administrative.” Site drainage is controlled primarily by the ephemeral drainage ditch; no perennial surface water features are associated with the site.

The original usage of MSFC-027 was for bulk storage of fuel oil and alcohol in above-ground storage tanks (AST). The site consisted of 11 ASTs and one pump house structure. Three storage tanks located in the western portion of the site were designated for fuel oil storage and eight ASTs located in the eastern portion of the site were designated for alcohol storage. The only other structure was designated as the alcohol and fuel oil pump station, which distributed the constituents of the ASTs to the respective underground storage tanks associated with the ethylene generation buildings of former mustard production lines 1 through 4 (MSFC-034). The fuel oil and alcohol were utilized in the generation of ethylene gas for the production of mustard gas at referenced mustard production lines. Based on 1959 aerial photographs, the storage tanks were removed subsequent to 1956.

Sometime between 1950 and 1956, a Fueling Test Stand was constructed in the extreme western portion of the site. Documentation from April 1956 indicated that the allowable materials for use at this facility included kerosene, alcohol/water and liquid oxygen. Unsymmetrical dimethyl hydrazine (UDMH), utilized for fuel ignition, was also approved for use, but with restrictions. Additional restrictions imposed for this structure included distances (approximately 530 feet) to unrelated buildings and constituent quantities of previously referenced materials classified as Class 150. Documentation also noted that the former test facility was extensively used for various testing (unidentified) which required considerable amounts of launching and handling equipment and personnel; however, the majority of the activity was not for fueling tests. Remodeling of this facility was also noted along with information that “necessary simultaneous fueling and UDMH fueling is accomplished in other areas.”

From the photographic record, removal of the ASTs occurred between the years 1956 and 1959. A large (approximately 4.5-acre) graded gravel area is visible in the eastern portion of MSFC-027 in the 1959 aerial photograph. Based on information presented in Section 4.0 of the draft OU-6 RI report (CH2M Hill, 2009), this area may have been constructed to accommodate missile or missile component testing by the Army in the late 1950s. An oblique aerial photograph presented in Appendix H (page H-16) of the CH2M Hill report shows standing missiles on the graded gravel pad, although the support structures typically associated with test stands are not present. It is possible that the missiles depicted in the CH2M Hill document were decommissioned rockets being prepared for a static display that is first observed in 1964 aerial photographs (CH2M Hill, 2009, page H-10) near the corner of Digney and Mercury Roads. No additional evidence corroborating this theory was found. The area appears to be unused in a 1961 aerial photograph.

Waste accumulation and storage began in the area of former alcohol ASTs 4323 through 4330 sometime prior to 1964, based on the 1964 aerial photograph. This section of the site was utilized as an accumulation area for wastes generated primarily by maintenance activities, including the storage of scrap metal, waste oils, solvents, sludge, and soil piles suspected to have been composed of sewage sludge. The site is no longer used for waste accumulation, but remains active as an equipment and materials storage yard for MSFC.

ATTACHMENT 2

CB&I PROCEDURE CMS-710-02-PR-01600, EXCAVATION AND TRENCHING

PROCEDURE

Procedure Title:	**Excavation and Trenching**	**CMS Number:**	**CMS-710-02-PR-01600**
Procedure Owner:	**HSE**	**Issuing Authority:**	**VP Global HSE**

EXCAVATION AND TRENCHING

6	Issued for Use - Removed hyperlinks from document	LDJ	22 Oct 2014
5	Issued for Use – Added hyperlink and reference to new WI, see section 4.1.3. (See Rev bars.)	JPO	19 Nov 2013
4	Issued for Use – Total re-write. (No Rev Bars)	JPO	20 Jun 2013
3	Issued for Use – Section 4.1.3 and 4.1.4 added for clarification, no change in requirements. Issuing Authority Approval not required. (See Rev Bars)	RLL	22 Jan 2013
2	Issued for Use – Corrected metric conversions. No content change. Issuing Authority Approval not required.	LDH	18 Aug 2011
1	Issued for Use – Revised 1.0 Changed HSSE to HSE & Put In New Template- No Change to Content (No Rev Bars). Issuing Authority Approval not required	LDH	03 Jun 2010
0	Issued for Use	JPO	30 May 2008
Rev	**Changes**	**Approved**	**Date**

"©Chicago Bridge & Iron Company, 2009. All Rights Reserved. For Internal Use Only.
NOTICE: THIS DOCUMENT, AND ALL TEXT, DRAWINGS, DETAILS AND DATA SHOWN HERETO, IS THE SOLE PROPERTY OF CHICAGO BRIDGE & IRON COMPANY, AND SHALL NOT BE REPRODUCED IN ANY MANNER, USED FOR ANY PURPOSE WHATSOEVER, OR RELEASED TO ANYONE EXCEPT BY EXPRESS WRITTEN PERMISSION OF CHICAGO BRIDGE & IRON COMPANY."

1.0 PURPOSE

The purpose of this Procedure is to establish the minimum requirements for the use of Excavation and Trenching on CB&I sites.

2.0 SCOPE

This procedure applies to all CB&I employees, contractors, subcontractors, and visitors associated with a CB&I site.

3.0 RESPONSIBILITIES

The following personnel have responsibilities defined in this procedure:

- CB&I Managers
- CB&I Supervisors
- CB&I Employees
- CB&I Contractors
- CB&I Subcontractors
- CB&I Visitors

4.0 PROCEDURE

This procedure shall establish the minimum requirements for work, activities, inspections, and training, required for work in and around excavation and trenching operations on CB&I sites. This procedure will also apply to all CB&I subcontractors.

4.1 General

4.1.1 A designated Competent Person shall be onsite at all times when excavation activities are conducted.

4.1.2 Before any excavation can be started, an Excavation Permit (CMS-710-02-FM-01601) must be completed by the responsible Superintendent with input from the Authorized Person for underground testing (utility identification) and the Excavation Competent Person. Appropriate Client approval is also necessary where required by Client regulations. Client and/or utility company representatives shall be notified 24 hours prior to beginning excavations.

4.1.3 Underground Storage Tank (UST) Removal

CMS-710-02-WI-01601 contains specific instructions for trenches and excavations relating to UST removal.

4.1.4 Underground Utilities

4.1.4.1 At least 3 feet (0.9144 m) of clearance between any underground utility and the cutting edge or point of powered excavation equipment will be maintained until the precise location of the utility is determined. Initial excavation within this 3 foot area will be conducted manually.

4.1.4.2 All utilities exposed during an excavation will be protected from accidental damage.

4.1.4.3 The underground utilities information obtained shall be provided to affected personnel via the job safety analysis (JSA). Underground utilities information, in relation to proposed excavation work, means the following information about underground essential services that may be affected by the excavation:

- The utilities that may be affected
- The location, including the depth, of any pipes, cables or other plant associated with the affected essential services

- Any conditions on the proposed excavation work.

4.1.4.4 Any essential services information obtained must be readily available for inspection. The information must be available:

- For at least 2 years after the incident occurs
- In every other case, until the excavation work is completed.

4.1.5 The work area around a excavation over 4 feet (1.2 m) deep shall be, so far is reasonably practicable, secured from unauthorized access (including inadvertent entry).

4.1.6 When mobile equipment is operated adjacent to an excavation, and the operator does not have a clear and direct view of the edge of the excavation, a warning system shall be utilized such as barricades, hand or mechanical signals, or stop logs.

4.1.7 Soil classification shall be made by the Competent Person or a registered Professional Engineer trained in soil classification. Unclassified soil shall be assumed to be Class "C" and will be sloped 1½:1 or shored when the excavation exceeds 4 feet (1.2 m) in depth.

4.1.8 Each employee in an excavation shall be protected from cave-ins. Excavations over 4 feet (1.2 m) deep shall be shored, sloped, or benched as required. Excavations and the work scheduled to be performed in the excavation shall be evaluated by the Competent Person to determine if the shoring, sloping, or benching needs to begin at a depth less than 4 feet (1.2 m).

4.1.9 Shoring for excavations over 20 feet deep (6 m) shall be designed by a registered Professional Engineer and shoring installed shall be approved and signed off by a registered Professional Engineer.

4.1.10 Spoils must be placed a minimum of 3 feet (0.9 m) from the edge of the excavation. Loose soil or rocks shall be removed from the sides of excavation walls.

4.1.11 Excavations 4 feet (1.2 m) in depth or greater, shall have a stairway, ladder, ramp, or other safe means of egress within 25 feet (7.6 m) of any employee. Excavations that are less than 4 feet (1.2 m) in depth shall have safe access and egress for all employees with a maximum break in elevation of 19 inches (48.3 cm).

4.1.12 Structural ramps that are used solely by employees as a means of access or egress from excavations shall be designed by a competent person.

4.1.13 Structural ramps used for access or egress of equipment shall be designed by a competent person qualified in structural design, and shall be constructed in accordance with the design.

4.1.14 Excavations shall be inspected by a Competent Person and the results recorded on CMS-710-02-FM-01602 Daily Inspection Form:

4.1.14.1 Prior to entry

4.1.14.2 After rain or snowfall

4.1.14.3 After freezing and/or thawing temperatures occur

4.1.14.4 After any condition that can change the integrity of the soil

4.1.15 During rainy weather, work in excavations shall cease until the Competent Person has evaluated the excavation and the effect of the rain on the excavation. The Competent Person will maintain a regular inspection schedule to ensure the excavation stability and condition during rain events if employees continue to work in the excavation. Depending on the amount of rainfall, the duration of the rainfall and the soil type, the Competent Person may need to maintain continuous observation of the excavation conditions.

4.1.16 For excavations that have the potential for oxygen deficiency or to contain hazardous atmosphere, an atmosphere evaluation shall be performed. This test will be performed by the Construction HSE Manager or their designee. Indications of the potential for a hazardous atmosphere include, but are not limited to: gas lines, sewer lines, areas with hydrocarbons, and proximity to emissions sources for H_2S, SO_2, CO, CO_2 and other gases that are heavier than air. Excavations with hazardous atmospheres should be treated as a confined space.

4.1.17 Excavations shall be evaluated for hazards in addition to cave-in potential and atmospheric hazards. Electrical sources, energized (pressurized) pipes, underground tanks, etc. may also present a hazard to employees who are required to enter an excavation.

4.1.18 The Competent Person responsible for the crew working in the excavation shall inspect the excavation throughout the work period, record the observations on CMS-710-02-FM-01602, and stop operations when unsafe conditions exist.

4.1.19 Water shall not be allowed to accumulate in excavations at any time. Pumps, drains, or other means shall be used to remove water constantly.

4.1.20 Where the stability of adjoining buildings, walls, or other structures is endangered by excavation operations, support systems shall be provided, such as shoring, bracing, or underpinning to ensure the stability of such structures. Excavation below the level of the base or footing of any foundation or retaining wall that could be reasonably expected to pose a hazard to employees shall not be done unless:

- A support system, such as underpinning, is provided to ensure the safety of employees and the stability of the structure;
- The excavation is in stable rock;
- A registered professional engineer has determined that the structure is sufficiently removed from the excavation so that it will be unaffected by the excavation activity; or
- A registered professional engineer has determined that such excavation work will not pose a hazard to employees.

4.1.21 Sidewalks, pavements and appurtenant structures shall not be undermined unless a support system or another method of protection is provided to protect employees from the possible collapse of such structures. The support system shall be capable of withstanding a minimum live load of 125 lb/ft.

4.1.22 Emergency rescue plans shall be developed and rescue equipment shall be readily available.

4.1.23 Employees will not be permitted to work under loads or near digging equipment.

4.1.24 Employees exposed to falls by excavation crossings and walkways will be provided with fall protection in accordance with Procedure CMS-710-02-PR-00900 - Fall Protection.

4.2 Training

4.2.1 Employee Training

4.2.1.1 Each employee who works in or around an excavation shall be trained to recognize potential hazards associated with excavations: cave-in potential, fall hazards, safe entry and exit, proximity to excavating equipment, air quality, back-filling and compacting activities, protective systems, etc. This training shall be documented and records maintained in the Site HSE files

4.2.1.2 Each individual assigned as an Excavation Competent Person shall have documented training or shall have documentation of experience and qualifications in excavation activities.

5.0 REFERENCES

29 CFR (Code of Federal Regulation) 1926.650 - 1926.652	Fall Protection
CMS-710-02-PR-00900	Fall Protection
CMS-710-02-WI-01601	Underground Storage Tank Removal

6.0 TERMINOLOGY

Term	***Definition***
Accepted Engineering Practices	Those requirements that are compatible with standards of practice required by a registered professional engineer.
Authorized Person for Underground Testing	The person(s) designated by the Construction Manager to identify underground utilities using a combination of blue prints and underground testing equipment. This individual shall coordinate excavation activities with the Client (as applicable) and outside utility companies. Several individuals (such as the Piping Superintendent, Electrical Superintendent, Equipment Superintendent, and Field Engineer) may serve as Authorized Persons as necessary.
Benching (Benching system)	A method of protecting employees from cave-ins by excavating the sides of an excavation to form one or a series of horizontal levels or steps, usually with vertical or near-vertical surfaces between levels.
Cave-In	The separation of a mass of soil or rock material from the side of an excavation, or the loss of soil from under a trench shield or support system, and its sudden movement into the excavation, either by falling or sliding, in sufficient quantity so that it could entrap, bury, or other wise injure and immobilize a person.
Competent Person	One who is capable of identifying existing and predictable hazards in the surroundings, or working conditions which are unsanitary, hazardous, or dangerous to employees, and who has authorization to take prompt corrective measures to eliminate them.
Excavation	Any man-made cut, cavity, trench, or depression in an earth surface, formed by earth removal.
Excavation Competent Person	A person capable of identifying existing and predictable hazards in the surroundings or working conditions which are unsanitary, hazardous, or dangerous to employees, and who has authorization to take prompt corrective measures to eliminate them. The Construction Manager and Construction HSE Manager shall designate the Competent Person in writing and their qualifications shall be documented.
Hazardous Atmosphere	An atmosphere which by reason of being explosive, flammable, poisonous, corrosive, oxidizing, irritating, oxygen deficient, toxic, or otherwise harmful, may cause death, illness, or injury.
Protective System	A method of protecting employees from cave-ins, from material that could fall or roll from an excavation face, into an excavation, or from the collapse of adjacent structures. Protective systems include support systems, sloping and benching systems, shield systems, and other systems that provide the necessary protection.

Ramp	An inclined walking or working surface that is used to gain access to one point from another, and is constructed from earth or from structural materials such as steel or wood.
Registered Professional Engineer	A person who is registered as a professional engineer in the state where the work is to be performed. However, a professional engineer, registered in any state is deemed to be a “registered professional engineer” within the meaning of this standard when approving designs for "manufactured protective systems" or “tabulated data” to be used in interstate commerce.
Shoring (Shoring System)	A structure such as a metal hydraulic, mechanical or timber shoring system that supports the sides of an excavation and which is designed to prevent cave-ins.
Site	Any location, facility or project where CB&I is performing work. Sites may include, but are not limited to, laboratories, offices, shops, owned facilities, leased facilities and/or project sites.
Sloping (Sloping System)	A method of protecting employees from cave-ins by excavating to form sides of an excavation that are inclined away from the excavation so as to prevent cave-ins. The angle of incline required to prevent a cave-in varies with differences in such factors as the soil type, environmental conditions of exposure, and application of surcharge loads.
Stable Rock	Natural solid mineral material that can be excavated with vertical sides and will remain intact while exposed. Unstable rock is considered to be stable when the rock material on the side or sides of the excavation is secured against caving-in or movement by rock bolts or by another protective system that has been designed by a registered professional engineer.
Structural Ramp	A ramp built of steel or wood, usually used for vehicle access. Ramps made of soil or rock is not considered structural ramps.
Trench (Trench Excavation)	A narrow excavation (in relation to its length) made below the surface of the ground. In general, the depth is greater than the width, but the width of a trench (measured at the bottom) is not greater than 15 feet (4.6 m). If forms or other structures are installed or constructed in an excavation so as to reduce the dimension measured from the forms or structure to the side of the excavation to 15 feet (4.6 m) or less (measured at the bottom of the excavation), the excavation is also considered to be a trench.

7.0 EXHIBITS

Exhibit 7.1	CMS-710-02-FM-01601 – Excavation Permit
Exhibit 7.2	CMS-710-02-FM-01602 – Daily Excavation Inspection Form
Exhibit 7.3	CMS-720-01-FM-00020 – Business Glossary
Exhibit 7.4	CMS-720-01-FM-00021 – Technical Glossary

8.0 ATTACHMENTS

None

ATTACHMENT 3

CB&I INCIDENT REPORTING AND MANAGEMENT PROCEDURE – FEDERAL

CBI Incident Notification, Reporting, and Management Procedure

Directions, Notes, and Reminders

- **Follow this procedure step-by-step for all incidents.**
- **This procedure has limited application to subcontractors. Assist subcontractors with medical emergencies (as applicable) and then immediately notify the Program H&S Manager for guidance.**
- **Periodically review this procedure in order to be familiar with the steps - prior to an incident occurring.**
- **For injuries and vehicle accidents, secure the scene to prevent additional injury/incident, administer on-site first aid, and arrange for emergency assistance prior to making any other notifications.**
- **The Site Supervisor is responsible for making all other notifications to:**
  - **CORE Health Networks (must be notified while employee is en route to medical care facility): (225) 756-2673**
  - **CB&I Help Desk / Hot Line: 866-299-3445**
  - **Project Manager: John Nenni 256-213-2192 (office) 419-420-4263 (cell)**
  - **Marcia Musgrave: 419-429-5520.**
- **The Site Supervisor (or SSHO) is responsible for notifying the Program H&S Manager or Alternate H&S Manager by telephone prior to making any other notifications (other than calling 911 and CORE).**
- **The Site Supervisor or SSHO shall accompany all injured personnel to the CORE clinic or to the hospital emergency room.**
- **The Project Manager shall notify the Program Manager in person or by telephone no later than two hours after the incident and the U.S. Army Garrison Chief, Installation Restoration Branch (256) 955-6968.**
- **All incident reports shall be completed by typing (when feasible and applicable).**
- **All incident reports shall be submitted (email or fax) to the Program H&S Manager or Alternate H&S Manager for review and distribution.**

Incident Notification, Reporting, and Management Procedure

Action	Who / When	Under what circumstances	How	Notes
1. Notify Site Manager for all incidents (no matter how minor)	Injured person, first person recognizing incident, driver/passenger, or employee causing damage *Immediately*	All incidents no matter how minor (including minor cuts, scratches, minor strains/sprains, and insect bites)	In person or by telephone	Site Manager to make note of very minor incidents (such as band-aid over scratch) in field logbook
2. For *life-threatening injuries / illnesses* - make scene safe, contact local emergency personnel For *non life-threatening injuries / illnesses* - make scene safe, transport injured person to doctor at an occupational medical facility For *vehicle accidents* – make scene safe, notify police, aid injured parties For *equipment / property damage* - make scene safe, prevent further damage or injuries	Site Manager *Immediately (concurrently with next step if injury or illness)* Site Manager *Immediately (concurrently with next step if injury or illness)* Driver/passenger *Immediately* Employee causing damage *Immediately*	In case of serious injury or illness requiring off-site medical care	Via ambulance Via vehicle	Site Manager or SSHO must immediately go to emergency care facility. Follow CMS-710-01-PR-03600 post accident alcohol and drug testing procedure. Site Manager or SSHO must transport and stay with injured person until released from care. Make medical personnel aware of CB&I's "restricted work will be provided" and "no prescriptions if possible" policies. CORE Health Network Clinics are the preferred urgent care facilities when possible, unless injury is severe and victim is transported by ambulance.
3. Notify CORE Health Networks (for injuries / illnesses to CB&I employees only)	Site Manager *Immediately, prior to transporting the injured employee, unless injuries are life threatening*	• Serious injury requiring off-site medical care • If employee states that he/she has been exposed to any chemical or biological substance • If illness is work related	CORE Health Networks 877-347-7429	Not required for temporary agency and subcontractor labor Provide name of injured employee, name and phone # of treating medical facility, description of the incident CORE Health Networks will help with medical facility coordination and follow-up care
4. Notify CB&I's HSE Manager Notify CB&I's HSE Director if HSE Manager cannot be contacted.	Site Manager *Immediately (concurrently with providing transportation to occupational medical facility or EMS transport to hospital)*	All incidents except on-site first aid cases	See Incident Notification and Communication Contact List (attached)	HSE Manager will notify HSE Director, as appropriate

Incident Notification, Reporting, and Management Procedure

Action	Who / *When*	Under what circumstances	How	Notes
5. Notify CB&I Notification Hotline / Help Desk	Site Manager *As soon as practical, but not longer than one hour after occurrence.* *Prior to sending an individual for medical treatment*	• Illness and/or injury (doctors cases and above) • Any utility damage • Property damage (damage > $2,500.00) • Vehicle accidents (All) • Criminal activity (i.e. bomb threat, theft) • Natural disaster (all) • Explosion and/or fires (damage > $2,500.00 or result in injury) • Environmental spills/releases (incidents that requires regulatory notification or have an offsite impact) • Regulatory agency visit • Fatalities	CB&I Notification Hotline / Help Desk Phone Number: 866-299-3445	Request name of Hotline / Help Desk operator for future reference and note date/time of notification
6. Complete forms: *Injuries and illnesses*: • Medical Authorization for Medical Care or Testing • Release for Medical Opinion and Return to Work (if applicable) *and* fax to CORE Health Networks *and* email or fax to CB&I's HSE Manager	Injured employee and medical facility personnel (Site Manager or SSHO is responsible for verifying forms are completed) *Prior to leaving medical facility*	• Serious injury requiring off-site medical care • If employee states that he/she has been exposed to any chemical or biological substance	Fax or email to CORE Health Networks: 225-292-8986 or jlandry@corehealthnet.com Email or fax to HSE Manager	Site Manager or SSHO must take these forms with him/her to occupational medical facility or hospital (Contained in 710-01-PR-02100, CMS-710-05-PR-02200, and CMS-710-05-PR-02300) Contact HSE Manager for blank electronic forms
7. Call CB&I's Project Manager and notify of incident (Remind Project Manager of notification responsibilities to Program Manager)	Site Manager *As soon as reasonably possible*	If Hot Line / Help Desk notification is required (see # 5 above)	See Incident Notification and Communication Contact List	Project Manager will verbally report incident to upper level of Operations/Business Line Management *As soon as reasonably possible*
8. Notify Marcia Musgrave	Site Manager	All incidents involving personnel (injuries, illnesses, vehicle accidents)	419-429-5520	

Incident Notification, Reporting, and Management Procedure

Action	Who / When	Under what circumstances	How	Notes
9. Call back CB&I's HSE Manager to report on status of *injured / ill employee*	Site Manager *Prior to employee leaving medical facility*	All injuries and illnesses requiring off-site medical care	See Incident Notification and Communication Contact List (attached)	
10. Complete forms (typed electronically): *Injuries/Illnesses* • Supervisor's Employee Injury/Illness Report Form • CMS-710-05-FM-02401, CBI Incident Report Email or Fax completed forms to HSE Manager and CORE Health Networks	• Site Manager • Witnesses *As soon as possible – no later than 24 hours*	All injuries and illnesses	Email to HSE Manager See Incident Notification and Communication Contact List (attached) Fax or email to CORE Health Networks: 225-292-8986 or jlandry@corehealthnet.com	Site Manager should have these forms with him/her at all times (Contained in 710-01-PR-02100, CMS-710-05-PR-02200, and CMS-710-05-PR-02300) Contact CB&I's HSE Manager for blank electronic forms
11. Complete forms (typed electronically): *All other incidents* • CMS-710-05-FM-02401, CBI Incident Report Email or Fax completed forms to HSE Manager (CMS-710-02-PR-02700)	• Site Manager • Witnesses *As soon as possible – no later than 24 hours*	All vehicle accidents and /or all property damage	Email to HSE Manager See Incident Notification and Communication Contact List (attached)	Site Manager should have these forms with him/her at all times (Contained in CMS-710-01-PR-02100, CMS-710-05-PR-02200, and CMS-710-05-PR-02300) Contact CB&I's HSE Manager for blank electronic forms

CFS INCIDENT NOTIFICATION AND COMMUNICATION CONTACT LIST

Project Number: 500382 Project/Office Name / Location: RSA / PMC / MSFC-027, Redstone Arsenal, Huntsville, AL

Name	Phone Number(s)	Fax Number	E-mail
CB&I Notification Hotline/Helpdesk	866-299-3445 225-215-5056 (Outside Continental US)	N/A	N/A
CORE (Must be notified prior to or during transport to medical treatment center)	877-EHS-CB&I-(877-347-7429)	225.292.8986	
CB&I H&S Manager: Doug Russell	865-560-7918 (office) 865-414-9545 (cell)	865-560-7956	winston.russell@cbifederalservices.com
CB&I PMC Program Manager: Don Burton	256-213-2194 (office) 256-783-6065 (cell)	256-213-2190	don.burton@cbifederalservices.com
CB&IProject Manager: John Nenni	256-213-2192(office) 419-420-4623 (cell)	256-213-2190	john.nenni@cbifederalservices.com
CB&I Army Programs Vice President: Bob Culbertson	865-560-7805 (office) 865-719-3293 (cell)	865-560-7956	bob.culbertson@cbifederalservices.com
CB&I Federal E&D H&S Director – Dave Mummert	419-429-5509 (office) 419-348-1544 (cell)	419-425-6039	david.mummert@cbifederalservices.com
CB&I HSE&Q Director – Matt Hadacek	303-486-2601 (office) 303-908-4587 (cell)	303-741-7703	matthew.hadacek@cbifederalservices.com

Note: Incident reports shall be faxed or emailed <u>only</u> to the Program H&S Manager (or Alternate H&S Manager) for review and proper distribution.

APPENDIX D

CONSTRUCTION QUALITY ASSURANCE PLAN

Construction Quality Assurance Plan
MSFC-027, Inactive Waste Accumulation Area
Operable Unit 18
U.S. Army Garrison-Redstone
Madison County, Alabama
EPA ID No. AL7 210 020 742

Prepared for:

Mission & Installation Contracting Command
ATTN: MICC Center – FSH
2107 17th Street
Building 4197, Suite 15
Fort Sam Houston, Texas 78234-5015

Prepared by:

CB&I Federal Services, LLC
2410 Cherahala Blvd
Knoxville, Tennessee 37932

Task Order 014
Contract Number W91ZLK-09-D-0006
CB&I Project No. 500382

April 2016

Approval/Signature Page

I have read and approve this Construction Quality Assurance Plan for the Corrective Measures Implementation Work Plan for MSFC-027 at Redstone Arsenal, Madison County, Alabama with respect to project hazards, regulatory requirements, and CB&I procedures.

Project Name:	CB&I Project Number
Construction Quality Assurance Plan MSFC-027, Redstone Arsenal	500382

Allen Bradley
Cost Account Manager

21-Apr-16
Date

Table of Contents

Page

List of Tables iv
List of Attachments iv
1.0 Introduction 1-1
1.1 Overall Directive 1-1
1.2 Project Background 1-1
1.3 Objectives of the Construction Quality Assurance Program 1-3
1.4 Presentation of the CQAP 1-4
2.0 Responsibility and Authority 2-1
2.1 CQA Organization and Key Elements 2-1
2.1.1 CB&I Cost Account Manager 2-1
2.1.2 Oversight Agency (ADEM) 2-2
2.1.3 CB&I Site QCSM 2-2
2.1.4 CQC Analytical Laboratory 2-2
2.1.5 CB&I and Subcontractors 2-3
2.1.6 CQC Personnel 2-3
2.2 Qualifications 2-3
2.3 CB&I Personnel Training 2-4
2.4 Communication Within the CQA Organization 2-5
2.5 CQA Meetings 2-5
3.0 Contract Scope of Work 3-1
3.1 Proposed Work Activities 3-1
3.2 CQC Requirements and Responsibilities 3-1
3.2.1 Preliminary Activities 3-2
3.2.2 Soil Excavation 3-2
3.2.3 Backfill and Revegetation 3-3
3.2.4 Final Inspection and Demobilization 3-3
3.3 Additional Considerations 3-4
4.0 Document Control 4-1
4.1 Documentation 4-1
4.2 Daily Construction Log 4-2

Table of Contents *(Continued)*

Page

4.3 Records 4-2
4.3.1 Evidence of Contract Compliance 4-2
4.3.2 Storage of Field Records 4-3
4.4 Project Submittals 4-3
4.4.1 Document Submittal Register 4-3
4.4.2 Submittal Preparation and Transmittal 4-3
4.4.3 Resubmittals 4-4
5.0 Nonconformances and Corrective Actions 5-1
5.1 Nonconformance Report 5-1
5.2 Identification of Nonconforming Items 5-1
5.3 Nonconformance Tracking Register 5-1
5.4 Control and Segregation 5-2
5.5 Disposition 5-2
5.6 Documentation 5-2
5.7 Corrective Actions 5-2
5.8 Stop Work Notice 5-2
5.9 Conflict Resolution 5-3
6.0 Procurement Control 6-1
6.1 Introduction 6-1
6.1.1 Review of Procurement Documents 6-2
6.1.2 Source Evaluation and Selection 6-2
6.1.3 Acceptance of Services 6-2
6.1.4 Receipt Inspection and Verification 6-3
6.1.5 Handling, Storage, Packaging, and Shipping 6-3
6.2 Subcontractor Quality Control 6-3
6.3 Analytical Laboratory Services 6-4
6.3.1 Other Subcontractors 6-4
6.3.2 Subcontractor Noncompliance 6-4
7.0 Audits 7-1
7.1 Scheduling and Planning 7-1
7.2 Internal Performance Audits 7-1

Table of Contents *(Continued)*

Page

7.3 Execution of Audits 7-2
7.3.1 Pre-Audit Meeting 7-2
7.3.2 Audit 7-2
7.3.3 Exit Meeting 7-2
7.3.4 Audit Report 7-3
7.4 Response 7-3
7.5 Follow-Up 7-4
7.6 Documentation 7-4
8.0 Construction Inspections 8-1
8.1 Preparatory Inspections and Meetings 8-1
8.2 Initial Inspections 8-2
8.3 Follow-Up Inspections 8-2
8.4 Pre-Final Inspection 8-3
8.5 Final Inspection 8-3
8.6 Inspection Documentation 8-3
9.0 Analytical Testing 9-1
10.0 References 10-1
Tables
Attachments

List of Tables

Table	Title
4-1	Typical Daily Construction Log
5-1	Nonconformance Report
5-2	Nonconformance Report Tracking Register
5-3	Stop Work Notice
5-4	Stop Work Notice Log

List of Attachments

Attachment	Title
1	Field Inspection Checklist

1.0 Introduction

This construction quality assurance plan (CQAP) presents the overall program for construction quality assurance to be implemented during corrective measures implementation (CMI) activities at MSFC-027. This document establishes a program to comply with requirements established in the CMI work plan and those of the Alabama Department of Environmental Management (ADEM) and U.S. Environmental Protection Agency. The scope of work for the project is detailed in the CMI work plan for MSFC-027, to which this CQAP is an appendix.

1.1 Overall Directive

The procedures and practices set forth in the CQAP should be adhered to and specifically applied to all quality-related work on the project. It is the responsibility of all personnel performing work on the project to be familiar with and implement the technical requirements referenced in this CQAP or otherwise specified for the project, as included in the CMI work plan.

Conformance to the requirements of this CQAP will provide results which will verify that the contract, when completed, will conform to the specified requirements and be documented by defensible evidence that the work performed meets or exceeds the standards set forth for the project.

1.2 Project Background

MSFC-027 currently occupies approximately 24 acres in the central portion of Redstone Arsenal (RSA), with 8 acres within the National Aeronautics and Space Administration (NASA) George C. Marshall Space Flight Center (MSFC) boundary. The site lies above the RSA-148 and RSA-149 groundwater sites. When initially designated as the M-1 Waste Accumulation Area, the site occupied approximately 4 acres surrounded by a chain-link fence and paved with gravel and asphalt (A. T. Kearney, Inc., 1989; Geraghty and Miller, Inc. [G&M], 1991).

The site contains buildings, open storage areas, paved asphalt roadways, wooded areas, and maintained grass. Originally, this area was utilized for bulk aboveground storage of fuel oil and ethanol, supporting the production of ethylene gas in the manufacturing of the chemical agent mustard in 1943. These storage tanks were removed between 1956 and 1959. In the late 1950s through the early 1960s, missile component testing was conducted in the eastern portion of the site by the Army. In July 1960, the Army granted use and occupancy to MSFC. Two areas within the MSFC-027 boundary (MSFC-081 and MSFC-083) are currently being investigated by NASA in compliance with the Comprehensive Environmental Response, Compensation, and Liability Act.

Waste accumulation and storage by the Army and NASA began between 1961 and 1964, based on aerial photographs (CB&I Federal Services LLC [CB&I], 2014) and documentation (A.T. Kearney, Inc., 1989; G&M, 1991). This section of the site was utilized as an accumulation area for wastes generated primarily by maintenance activities, including the storage of scrap metal, waste oils, solvents, sludge, and soil piles suspected to have been composed of sewage sludge. The soil associated with the soil piles was placed on the existing grade. The locations of the soil piles, labeled 1 through 6, are shown on CMI work plan Figure 1-2. The site was used as a waste accumulation area from the 1960s to 1987. ADEM inspected the site in July 1986 and noted no violations or hazardous waste activities in the area. The site is no longer used for waste accumulation but remains active as an equipment and materials storage yard for MSFC.

The topography of the site is relatively flat, with the area to the west-northwest as the topographically high area, generally sloping to the east-southeast. An unnamed ephemeral storm water drainage feature (ditch) bisects the site, entering on the northern boundary and exiting the southern boundary.

Lithologic logs from soil and well borings at MSFC-027 indicate that native soils consist of predominantly medium- to high-plasticity clay, with trace to little amounts of silt and fine-grained sand. Based on auger refusal, thickness of the residual soils (overburden) ranges from approximately 21.5 (MSFC-027-SB024) to 51 (E27-RS853) feet. Chert and limestone fragments found in the clay matrix are residual from weathering of the cherty limestone bedrock. The amount of residual material increases with depth, and a zone containing abundant residual chert fragments is found just above bedrock.

Lithologic data from bedrock wells installed across this portion of RSA indicate that the shallow bedrock first encountered correlates with the middle to upper Tuscumbia Limestone and exhibits well-developed karst features. The Tuscumbia Limestone beneath this area is characterized by thinly bedded to massive, fine to medium crystalline, stylolitic limestone with numerous chert nodules and chert lenses.

The average depth to groundwater from overburden monitoring wells (E27-RS849, E27-RS851, E27-RS853, MC-MW04-006, and E-RS 1085) adjacent to the soil piles is 24 to 40 feet below ground surface (bgs). Depth to groundwater increases from south of the soil piles to north of the soil piles (i.e., 24 to 40 feet bgs) (CB&I, 2014). Regional overburden groundwater has been recorded to flow generally to the south (CB&I, 2015); however, July 2011 site-specific elevation data and spring 2011 data (NASA, 2012) indicate a radial flow from E27-RS851 and MC-MW04-006, respectively, with a component to the west-northwest towards E27-RS1073, MC-MW04-007, and E27-RS850.

The MSFC-027 Resource Conservation and Recovery Act facility investigation (RFI) report (CB&I, 2014) provides additional detail on the geology and hydrogeology at the site.

The MSFC-027 RFI (CB&I, 2014) defined the nature and extent of contamination and evaluated potential risks to current and future receptors. During the Alabama Risk-Based Corrective Action Risk Management 2 evaluation, arsenic, pesticides (4,4'-DDD, -DDE, and -DDT), and polychlorinated biphenyl (Aroclor 1260) in soil were identified as chemicals of concern (COC) warranting further action because they pose an unacceptable health threat to commercial/ industrial receptors or hypothetical future residents. In addition, based on the results of the screening-level ecological risk assessment (CB&I, 2014), it was concluded that constituents in surface soil at the MSFC-027 soil piles have the potential to pose hazards to ecological receptors. Constituents in surface soil at the remainder of the MSFC-027 site are unlikely to pose ecological hazards, with the possible exception of selenium, which may pose hazards to terrestrial plant communities. However, selenium's mean concentration is less than its background screening value, indicating that concentrations of selenium across the site are similar to naturally occurring background levels.

Corrective measures are needed to address arsenic, pesticides, and polychlorinated biphenyls in soil at MSFC-027 before the site can be released for unrestricted use. Thus, the Army has elected to perform corrective measures to remove and dispose of contaminated soils at MSFC-027 to address this problem. The Army intends to achieve unrestricted use of surface media at MSFC-027 through implementation of corrective measures.

Groundwater beneath the site (including the saturated zone soils) is included in the RSA-148/149 groundwater units; however, responsibility of the groundwater is assigned to MSFC and is being addressed as part of the MSFC Operable Unit 3 investigation. Exposure to groundwater developed as a potable source may pose an unacceptable health risk due to mercury, cis-1,2-dichloroethene, and trichloroethene (CB&I, 2014). However, potable use of groundwater is currently precluded by RSA's site access control program and nonpotable uses of groundwater are managed under the site access control program (U.S. Army Garrison-Redstone [Army], 2012) and the terms of the interim record of decision for installation-wide groundwater (Shaw Environmental, Inc. [Shaw], 2007).

1.3 Objectives of the Construction Quality Assurance Program

The objectives of the construction quality assurance (CQA) program are to provide a system of procedures, practices, guidelines, and controls which, when implemented, will provide the confidence that project activities are accomplished in accordance with the specified contracts, design criteria, plans, drawings, and CMI plan developed during implementation of the

corrective measures. This CQAP establishes requirements for developing the overall site-specific construction quality control (CQC) system to be implemented at MSFC-027. The CQAP will be implemented during all phases of the project, including preliminary site activities, remediation, and close-out activities.

CB&I has been contracted by RSA to perform a CMI for MSFC-027. The Army will observe the work during its performance by CB&I and approve the work upon acceptable completion.

The CQAP is also applicable to off-site suppliers of equipment or services to the project that could affect the quality of the CMI. In particular, the following items must be adhered to during the CQA activities:

- Guidelines and requirements prepared and documented in the CMI work plan
- Verification of construction as it is performed, by inspection and verification testing, so that the design features are implemented as intended
- Evaluation of variance to the design that may occur during construction and remediation and its effect upon system performance
- Complete documentation prepared and maintained during and after construction and remediation so that it can be demonstrated that the design has been implemented and that the performance requirements have been met.

1.4 Presentation of the CQAP

This CQAP is designed so that the CQC activities for all portions of the remediation are executed and managed from a common set of quality objectives and practices as described in the CQC plan and the installation-wide quality assurance program plan (QAPP) (Shaw, 2013). The CQA and CQC activities, as described herein, serve as the minimum requirements to verify that all work is in compliance with the quality requirements set forth in the CMI work plan and consistent with the local, state, federal, and other appropriate regulatory agencies for the types of environmental activities performed.

2.0 Responsibility and Authority

CB&I will perform the CMI for MSFC-027. RSA will observe the work as it is performed to ensure compliance with the CMI work plan. Observation by ADEM personnel will be contingent on the phase of the work being performed.

It is the responsibility of all project personnel to report activities that could adversely affect the CQC requirements set forth by the contract documents. The dedicated CB&I Quality Control Site Manager (QCSM) is responsible for identifying, reporting, and documenting activities affecting quality and verifying correction of materials and activities that do not conform to the specified contract requirements. The Site QCSM will maintain a close working relationship with the Project Manager (PM) and RSA, keeping them advised of all situations which, if not corrected or controlled, could affect the quality of the project.

CB&I will designate a CQSM to be responsible for CQA. RSA will ultimately be responsible for providing the relevant documentation to the oversight agency (ADEM). CB&I will be responsible for furnishing appropriate documentation (outlined in this CQAP) to RSA for submittal to the oversight agencies, as required.

2.1 CQA Organization and Key Elements

CB&I's Cost Account Manager (CAM) will be responsible to ensure the execution of the CQA duties for MSFC-027, which will be performed by the Site QCSM. RSA has retained the services of CB&I to perform the required CMI at the site. CB&I, including its subcontractors, will be responsible for field activities and laboratory testing requirements for the project CQC. The responsibilities of key personnel involved in the CQA and CQC activities are described in Sections 2.1.1 through 2.1.6.

2.1.1 CB&I Cost Account Manager

The CAM has the overall responsibility to ensure the execution of the work to be performed by CB&I, including efforts to ensure compliance with the requirements of ADEM. Among other duties, the CAM will coordinate all financial and project-required resources (technical as well as administrative) necessary for the implementation of the project. The CAM will maintain overall responsibility of the project through coordination with CB&I, ADEM, and the Army.

The CAM shall verify that the corrective measures have been implemented in accordance with the CMI work plan. The CAM has the authority to select and dismiss organizations charged with implementation of the corrective measures and is vested with the authority to stop work if conditions adverse to quality are persistent and need to be corrected before proceeding further.

2.1.2 Oversight Agency (ADEM)

The primary oversight agency for the MSFC-027 CMI is ADEM. The oversight agency will provide review and comment on the CQAP to ensure that the proposed CQA program will provide for sufficient confirmation that work is being performed as intended. The oversight agency has the responsibility to review CQA documentation during and upon completion of the corrective measures to confirm that the CQAP has been followed and that the construction/remediation has been performed in accordance with the regulatory requirements.

2.1.3 CB&I Site QCSM

The CB&I Site QCSM will be responsible for the review and approval of the equipment and materials supplied by CB&I (including its subcontractors). The Site QCSM reports directly to CB&I's RSA Program Management Contract Quality Assurance (QA)/Quality Control (QC) Manager. The work that the Site QCSM produces is subject to the review and approval of the CAM, the Project QA/QC Manager, and the Project Engineer.

Deviations from the CMI work plan are not uncommon during the implementation of remedial actions. Activities may need to be adjusted accordingly during the progress of construction and remediation. The Site QCSM may be requested to change some aspects of the design and/or CMI work plan if unexpected conditions (e.g., a change in site conditions, unanticipated logistical problems, change in construction/remediation methodology, or lack of availability of certain materials) are encountered during the construction work. Accordingly, the Site QCSM will be responsible for preparing the appropriate revisions and providing necessary feedback to the CAM or Project QA/QC Manager.

The Site QCSM is responsible for coordinating all required field activities and laboratory CQC testing activities, including sample collection and shipment and verification of the test results. The results will be documented on the daily construction log. Additional responsibilities include preparing addenda to CQAP and formulating corrective actions when variance or nonconformance is detected or required.

2.1.4 CQC Analytical Laboratory

In accordance with the contract documents, CQC activities will be performed by a subcontracted laboratory for confirmation analysis with the soil excavation. The testing laboratory must have its own internal QC procedures to ensure that laboratory analyses conform to the appropriate regulatory requirements and applicable testing standards. The CQC laboratory is responsible for ensuring that analyses are performed in accordance with applicable test methods and standards for following internal QC procedures, maintaining sample chain-of-custody records, and reporting data. In addition, the CQC laboratory must be willing to allow announced or

unannounced inspections by authorized project personnel, including representatives from RSA and ADEM, in order to observe the sample preparation and analysis procedures. The laboratory must be willing to accommodate such inspection as long as the observer does not interfere with the testing process.

2.1.5 CB&I and Subcontractors

CB&I has the overall responsibility for conducting the remediation in accordance with the approved CMI work plan. CB&I, including its subcontractors, must perform CQC tests, as required by the CMI work plan, during project remediation activities; provide CQC documentation as specified; and report variances and nonconformances as outlined in this CQAP.

2.1.6 CQC Personnel

Field QA/QC personnel are individuals designated by CB&I and its subcontractors to ensure that products and services are provided to RSA in accordance with the CMI work plan.

2.2 Qualifications

Construction QA and QC activities will be accomplished by appropriately qualified personnel. Each individual shall understand and enforce the specified quality requirements and recommend improvements in processes and/or services which, when implemented, could affect the cost, schedule, and quality of the project in a positive manner.

The key personnel involved in the CQA/CQC program and their minimum recommended qualifications are provided in the following table:

Key Personnel in CQA/CQC Organization	Role/Minimum Qualifications Requirements
CB&I CAM *Allen Bradley*	The specific individual(s) to certify that the construction activities have been completed in accordance with project design CMI plan.
CB&I Project Engineer *Martha Adams*	The individual who prepared the CMI work plan and designated representative of CB&I with knowledge of the design and contract requirements.
QA/QC Manager *David Marcum*	Independent supervisor of CB&I Site QA/QC technicians. Twenty years of QA/QC project work.
Site Manager *TBD*	The individual implementing the CMI work plan. U.S. Army Corp of Engineers CQA trained.
Site QCSM *Brian Rhodes*	Responsible for the review and approval of the equipment and materials and coordinating all required field and laboratory CQC testing activities, including record keeping, sample collection, and shipment. Five years project work; prefer college degree in science or technical field.
CB&I Field QA/QC Personnel *TBD*	Designated CB&I and/or subcontractor personnel (or independent third parties) to perform specific CQC testing. No training required other than in-the-field training for assigned tasks.

2.3 CB&I Personnel Training

Personnel assigned to the project, including subcontractors, are trained to ensure competence commensurate with the responsibility and qualifications necessary to perform the tasks to which they are assigned. In addition to education and experience, job-specific training may be required to qualify individuals to perform certain activities. The CB&I CAM and Site QCSM will review and document the personnel qualifications and training to verify compliance to the subcontract requirements.

All personnel will be trained per Occupational Safety and Health Administration Section 1910.120. Project personnel will receive an orientation to the CMI work plan as appropriate to their responsibilities before participation in project activities.

The CB&I CAM and Site QCSM will review the qualifications and training of all personnel assigned to the project. Training and qualification records will be maintained at the project site and available for review. Training of site personnel will be verified and documented as applicable to the work to be performed. The Site QCSM will monitor the training activities to verify all required training is completed for personnel performing work on the project and verify that the training is documented and current records are maintained.

Training will include all phases of the work as necessary and will be commensurate with the complexity of the activities being performed. Training methods may include formal classroom, required reading, on-the-job training, or combination of these methods. Training procedures will be reviewed and approved by qualified CB&I project personnel.

Training programs are conducted according to organizational needs and policies so that personnel have the following:

- An acceptable understanding of the safety consideration of the work tasks
- Knowledge of the processes adequate to perform assigned tasks
- A working knowledge of the project or facility basis requirements
- An understanding of systems, terminology, reasons for performance of specific control functions, and the acceptance and rejection criteria for the work
- Knowledge of the consequences of inadequate quality attainment.

The training program will be evaluated to determine the effectiveness of the program and instruction. If the program content, instructor capabilities, or other conditions require changes,

the program will be updated at that time. At a minimum, the training will be reviewed as part of the management assessment.

CB&I maintains qualification and training records for each employee. Training records should include all documents that establish the employee's capabilities, including outside training and training performed by approved training organizations. The Site QCSM will verify compliance with the project requirements.

2.4 Communication Within the CQA Organization

Communication between the CQA program participants includes the exchange of information which allows work to proceed and the required reporting so that activities can be reviewed. Communication in the form of construction documents, inspection reports, audit reports, verification test results, and daily construction logs must be timely so that reviews and evaluations can be performed by all the parties responsible for execution of the work.

CQA personnel, the CAM, and CB&I and its subcontractors must communicate as required and as addressed in this CQAP to maximize the efficiency and effectiveness of the CMI and to minimize variance or nonconformance.

2.5 CQA Meetings

CQA meetings will be held throughout the progression of construction/remediation activities on an as-needed basis. Progress meetings will be documented in the form of meeting minutes prepared by the Site QCSM and maintained in the on-site CQA files.

3.0 Contract Scope of Work

The complete and detailed scope of work for the planned construction/remediation activities is presented in the CMI work plan and its supporting documents. Additionally, the CMI work plan provides the proposed schedule and sequencing of the activities. This chapter provides a general overview of the activities and an outline of the CQC testing requirements referenced in the CMI work plan. Chapters 4.0 through 9.0 present the necessary supporting aspects of the CQC/CQA program that must be implemented to ensure that the overall objectives of the program are met and to provide evidence of compliance with all applicable project and regulatory requirements.

3.1 Proposed Work Activities

The general scope of work for MSFC-027 includes the following:

- Procurement and subcontracting
- Preliminary site activities, including the following:
  - Mobilization
  - Utility clearance and marking
  - Construction of erosion controls
  - Surveying and marking of proposed excavation and stockpile areas
  - Pre-excavation soil sampling
- Excavation of contaminated soil, including confirmation sampling and analysis of the excavated area
- Waste management, including the following:
  - Characterization sampling
  - Transport and disposal of arsenic-contaminated soils as nonhazardous waste at a Subtitle D landfill
- Site restoration and demobilization, including:
  - Confirmation sampling of backfill
  - Application of backfill and topsoil and revegetation with approved grass mixtures
  - Equipment decontamination
  - Removal of erosion control
  - Demobilization.

3.2 CQC Requirements and Responsibilities

Sections 3.2.1 through 3.2.4 present a summary of the CQC testing requirements and responsibilities of the CB&I Site QCSM during implementation of corrective measures at MSFC-027. The information presented herein is intended only to provide an overview of the requirements; complete details of the planned work are contained in the CMI work plan and supporting documents.

3.2.1 Preliminary Activities

Preliminary activities include mobilization, requirements for base access, digging permits and utility marking, site control, surveying, well closure, and protection of existing site features. The digging permit will be obtained from the Directorate of Public Works prior to commencement of the CMI. During these activities, the Site QCSM will be responsible for reviewing purchase orders and packing slips to ensure all materials received are in accordance with the CMI specifications. Storm water erosion and sediment controls will be implemented in compliance with the *Alabama Handbook for Erosion Control, Sediment Control, and Stormwater Management on Construction Sites and Urban Areas* (Alabama Soil and Water Conservation Committee [ASWCC], 2014). Site controls will be enforced in accordance with the site-specific safety and health plan (MSFC-027 CMI work plan Appendix C). A licensed land surveyor will be subcontracted to delineate the project work boundary and mark the excavation areas. No monitoring wells are located within the excavation area. Consequently, no well closure is anticipated. Any well closure performed will require closure in accordance with Standard Operating Project Procedure No. 21, *Monitoring Well and Borehole Abandonment* (CB&I, 2014).

Prior to excavation, soil samples will be collected from the former deep borings within the MSFC-027 excavation areas to confirm that the soil contaminant concentrations in deep soils do not exceed specified cleanup goals for arsenic and are not naturally occurring. Deep soil sampling will also be performed to refine the limits of deep soil excavation. The sampling activities will include soil sampling at the depths and location of the following former boring locations: MSFC-027-SB022 (16 to 18 feet bgs), -SB023 (16 to 18 feet bgs), -SB024 (6 to 8 feet bgs), -SB026 (10 to 12 and 16 to 18 feet bgs), and -SB028 (22 to 24 feet bgs). Soil samples will be collected as discussed in Appendix E of the MSFC-027 CMI work plan.

3.2.2 Soil Excavation

Soil will be excavated to meet the cleanup goals specified in the CMI work plan. Excavation will be accomplished according to the Safety and Health Regulations for Excavations (Occupational Safety and Health Administration 29 Code of Federal Regulations Part 1926 Subpart P). A licensed land surveyor will be contracted to survey the final excavation limits at the site. Surveying will be conducted in accordance with the Alabama Society of Professional Land Surveyors Standards of Practice for Surveying in Alabama (www.asps.org). Soil confirmation samples will be collected as discussed in Appendix E of the MSFC-027 CMI work plan.

Contaminated soils will be stockpiled during the excavation at MSFC-027. Based on site knowledge and data from similar sites, it is expected that the excavated soils will be managed as nonhazardous special waste and that the soil can likely be disposed as special waste

(nonhazardous) at a Subtitle D landfill. CB&I will use a licensed transportation and disposal subcontractor to complete these activities. The waste characterization results will be submitted to ADEM for approval, and an ADEM waste certification number will be obtained prior to disposal of the excavated soils.

3.2.3 Backfill and Revegetation

Clean soil for the fill material will be laboratory tested prior to placement. Approximately 1,100 cubic yards of fill material will be needed from an approved borrow area. If sampling of the on-site borrow source material has not been conducted, CB&I will sample the material to confirm it is acceptable for use as backfill at the site. The borrow material sampling, if required, will include one 5-point composite sample analyzed for target compound list (TCL) semivolatile organic compounds, TCL pesticides/polychlorinated biphenyls, and target analyte list metals and one sample analyzed for TCL volatile organic compounds (MSFC-027 CMI work plan, Appendix E). The backfill material will be placed by the excavator, spread in maximum 12-inch loose lifts, and compacted using the excavator. Any uncontaminated soil removed during excavation activities will also be placed in the excavation. Once the areas have been backfilled and compacted, clean topsoil will be placed over the affected areas.

Soil excavation will disturb or destroy site vegetation. Any vegetated areas that are disturbed or destroyed will be restored following completion of the remediation and removal of all equipment. Restoration will include reseeding and mulching the area. The ASWCC should be consulted to determine the grass species to use. The Site QCSM will be responsible for verifying the proper fill and revegetation materials are used.

3.2.4 Final Inspection and Demobilization

When planned remediation activities have been completed, temporary field structures (e.g., fencing) will be removed and disposed off site. A final inspection of the project site will then be conducted in accordance with the requirements outlined in this CQAP.

After the completed work has been accepted by RSA, all personnel and equipment will be demobilized from the project site. During these activities, the Site QCSM will be responsible for the performance or oversight of the following:

- Oversee the removal of temporary field structures.
- Obtain required waste characterization samples as necessary for off-site disposal.
- Coordinate disposal with RSA personnel (including obtaining appropriate RSA signatures on waste manifests or bills of lading) and the subcontracted transportation and disposal vendor.

- Participate in final field inspection and note deficiencies that require corrective action.
- Coordinate implementation of corrective actions and arrange for reinspection.
- Submit final approved inspection report to RSA.
- Oversee demobilization activities.

3.3 Additional Considerations

The information contained in this chapter only represents an overview of the proposed work activities and is intended to serve as a guide to the complete details of work as included in the contract CMI work plan and other supporting documents (i.e., data collection QA plan, etc.). As noted previously, the remaining chapters of this CQAP contain discussions of the additional components included in the overall CQA/CQC program which are implemented to ensure the generation of defensible evidence of compliance with contract and regulatory requirements.

4.0 Document Control

The CQAP is a controlled document, and measures are included to maintain the currency and the use of the plan so that the CQC functions defined within are in accordance with the latest specified requirements. Distribution of the plan is controlled so that all revisions to the plan are issued to the plan holders and the superseded requirements revised accordingly in the existing plans.

Issuance and distribution of the plan will be controlled by the CB&I CAM or his/her designee, the document controller. The plan will be transmitted to each plan holder on the distribution list. The transmittal document will reference the assigned document control number, which will appear in the top right corner of the transmittal letter included in each document. The assigned number will be kept on a log and maintained by the CB&I CAM's designee in the home office in Knoxville, Tennessee. Copies will be maintained at specific locations and available to the individuals performing the work.

Revisions to the plan will be made by sections or by the addition of supplements or amendments and the revisions noted with change pages or with a new final or revised document. All accepted revisions to the plan will be transmitted to the plan holders according to the distribution list. Individuals or organizations designated as plan holders will be responsible for updating their copies of the plan.

4.1 Documentation

CB&I's CAM will provide a document control system to provide measures for the control of issuance, distribution, storage, and maintenance of documents relating to quality, including those from CB&I and its subcontractors and other vendors or suppliers.

Preparation, review, issuance, and revisions to documents affecting construction quality will be controlled so that the specified contract, regulatory, and permitting requirements are clearly defined and made available to the personnel performing the work. Such documents may include but not be limited to the following:

- Correspondence
- Drawings
- Procedures
- Plans
- Reports
- CMI work plan.

The CB&I CAM or his/her designee will review the documents to verify inclusion of the appropriate QA requirements.

4.2 Daily Construction Log

CQC reporting will be addressed in the daily construction log, and CB&I will document all project activities as required by the contract. The log will cover both conforming and nonconforming work and will include but not be limited to the following:

- Weather conditions
- Site instructions
- Nonconforming conditions
- Results of inspections and tests
- Types of defects/causes for rejection
- Corrective actions proposed and taken
- On-site personnel/major equipment log
- Delays and causes
- Verbal instructions.

A copy of a typical daily construction log is included as Table 4-1. RSA will be provided a weekly submittal of daily construction logs throughout the duration of the project.

4.3 Records

4.3.1 Evidence of Contract Compliance

Records will be prepared to furnish documented evidence that design, construction, and operation activities, including laboratory analysis, are in compliance with the quality requirements of the contract. The records will be consistent with the applicable sections of the project technical CMI work plan and may include one or more of the following:

- Daily construction logs
- Technical reviews
- Inspection and test reports
- Audit reports
- Monitoring and surveillance activities
- Personnel qualifications
- As-built drawings
- Nonconformance reports (NCR)/corrective actions
- Design documents
- Laboratory analysis reports
- Other specified documents.

4.3.2 Storage of Field Records

Copies of field records will be maintained and stored at the project site until turnover as specified by RSA. On-site records will be readily retrievable for review and audit purposes by ADEM and RSA. The records will be controlled so that the possibility of loss, damage, or other detrimental conditions of the records is avoided. The original project documents will be stored at CB&I's home office in Knoxville, Tennessee.

4.4 Project Submittals

Project submittals include documents generated or revised in the home office in Knoxville, Tennessee, or in the field site office at RSA. Project submittals will have tracking numbers issued with each new or revised document. In addition, project submittals specified in the contract documents and CMI work plan will be prepared by CB&I and submitted to the Site QCSM. CB&I's CAM is responsible for the preparation and maintenance of the specified submittals for the project.

A master set of as built-drawings will be kept at CB&I's field office and marked periodically with variances from the contract documents. Two sets of as-built drawings (redline drawings) will be maintained at the site. Each deviation will be identified with the appropriate modifying documentation. These as-built drawings include buried or concealed structures and utility features revealed during the course of the site work. A copy of the marked set of prints and updated design drawings, if required, will be submitted.

4.4.1 Document Submittal Register

The Project Submittal Register will be maintained in the home office in Knoxville, Tennessee. Any submittals returned unapproved or with comments requiring revisions will be so noted on the submittal register and re-entered as a revision. CB&I's Project Engineer or his/her designee will monitor the submittal register to verify submittals are being controlled, scheduled, and tracked and the status kept in an effective manner. The Project Submittal Register will be updated continuously, as applicable, and reviewed by the Project Engineer or his/her designee to determine the status of the submittals and compliance with the project schedule requirements.

4.4.2 Submittal Preparation and Transmittal

Submittals will be prepared by CB&I's CAM or his/her designee. Submittals from subcontractors or vendors will be reviewed by CB&I's Site QCSM prior to transmitting the submittals to the PM and Project Engineer or designees. All appropriate information will be completed prior to transmittal of the submittals. Submittals will be scheduled to coincide with the needed dates and adequate time allowed for review and approval in accordance with the contract requirements. The submittals will be reviewed for conformance to specified

requirements, completeness, and accuracy. Submittals requiring modifications or changes will be returned to CB&I's CAM or his/her designee for corrective actions and resubmitted for review.

4.4.3 Resubmittals

Submittals which are not approved by the Site QCSM or returned with comments which require resubmittal for approval will be processed in the same manner as the original submittals. The submittal number used for the original submittal will be used for each resubmittal followed by a numerical notation indicating the revision. The resubmittals will be re-entered on the Project Submittal Register with the new revision number.

5.0 Nonconformances and Corrective Actions

This chapter addresses the procedure for reporting nonconformances and corrective action for variance from the contract documents.

5.1 Nonconformance Report

Work, field testing, laboratory testing, or materials not conforming to the CMI work plan or contract requirements, including noncompliances and deficiencies identified by RSA, will be documented on an NCR. A sample NCR is included as Table 5-1. At a minimum, the NCR will detail the nonconforming conditions, recommended corrective action(s), and disposition of the corrective action(s). CB&I will immediately correct noncompliances or deficiencies identified by the Site QCSM. A master log of all NCRs will be kept by the Site QCSM for review by the PM. All NCRs will remain open until the nonconforming condition has been satisfactorily resolved and verified as acceptable by the QA/QC Director.

5.2 Identification of Nonconforming Items

Items identified as nonconforming will be documented on the NCR, which, as applicable, will include the following:

- Description of nonconforming item or activity
- Detailed description of nonconformance
- Cause of nonconformance
- Referenced criteria
- Recommended disposition
- Disposition and verification of corrective action
- Responsible organization.

5.3 Nonconformance Tracking Register

Each identified nonconformance will be documented on the sample NCR Tracking Register (Table 5-2), which, at a minimum, will include the following information:

- NCR tracking number
- Issue date
- Description of nonconformance
- Date closed.

The Site QCSM is responsible for maintaining the NCR Tracking Register and verifying that the corrective actions were implemented and verified prior to closing the NCR. The RSA will be notified in advance of verification of the corrective actions to permit their participation in the inspections and acceptance of the results prior to closing the NCR.

5.4 Control and Segregation

Nonconforming materials or items will be controlled to prevent inadvertent use or further processing which would cause the nonconforming condition to be inaccessible for correction. All items identified as nonconforming will be clearly identified and segregated from acceptable items except where size, installation status, and other conditions would make it impractical to segregate from conforming items. When nonconforming items are not segregated, they will be identified and clearly marked so that they may be easily recognized as nonconforming to prevent further activities prior to the implementation of the corrective action(s).

5.5 Disposition

The disposition of NCRs will include the necessary actions required to bring the nonconforming condition to an acceptable condition and may include reworking, replacing, retesting, or re-inspecting. Implementation of the disposition will be in accordance with the original procedural requirements, a specific procedure, or other acceptable written instructions by the QA/QC Director.

5.6 Documentation

Notifications of noncompliance and the proposed corrective actions will be documented on an NCR and processed in accordance with the provision described in this chapter. Corrective actions will be implemented upon receipt of the notification. The NCR will remain open until the noncompliance is resolved.

5.7 Corrective Actions

In addition to resolving identified nonconforming conditions, corrective actions will address the cause of adverse conditions contributing to the nonconformance and establish methods and controls to preclude the recurrence of the same or similar types of nonconformances.

The Site QCSM will track corrective actions to identify trends in the causes of the nonconforming conditions and initiate necessary actions to prevent recurrence. Additionally, the Site QCSM will monitor the corrective actions to verify that corrective actions were properly implemented and accepted and the NCR closed out.

5.8 Stop Work Notice

Nonconforming conditions which affect the quality of the project, threaten safety, or cause an environmental threat will be stopped through the use of a Stop Work Notice (Table 5-3). Stop Work Notices may also be issued in the event of insufficient corrective actions resulting in recurring nonconforming work. The issuance and tracking of Stop Work Notices will be

documented on a Stop Work Notice Log (Table 5-4) maintained by the CB&I CAM (or his/her designee).

5.9 Conflict Resolution

Conflicts arising from nonconformance and corrective actions which cannot be resolved at the project management and QC levels will be directed to successive levels of management as necessary to obtain resolution. The levels of management will include the Site QCSM, QA/QC Director, and CAM. All conflicts will be resolved within the specified requirements of the contract and the governing regulatory documents.

6.0 Procurement Control

This chapter addresses the procedure for ensuring that procured items and services meet established requirements and perform as specified within procurement standard operating procedures.

6.1 Introduction

Prospective suppliers will be evaluated and selected on the basis of the specified criteria. CB&I will ensure that approved suppliers can provide acceptable items and services as required by the contract. The Project Engineer will review and approve all materials and supplies that may affect quality of the project. Upon approval of purchase requisitions, the Site QCSM will receive a copy of the approved purchase requisition. When materials and supplies arrive at the project site, the Site QCSM will be responsible to ensure the items and services meet the requirements listed in the purchase requisition and that no items are installed prior to approval of applicable submittals.

The procurement details include provisions for the following, as applicable to the scope of work or services:

- ***Scope of Work.*** A statement of the scope of work to be performed by the subcontractor will be in the procurement documents.
- ***Technical Requirements.*** Technical requirements will be specified. Where necessary, these requirements will be specified by reference to CMI work plan, codes, regulations, procedures, QA program documents, and statement of work requirements that describe the services to be furnished. The procurement documents will provide for identification of inspection, verification, and acceptance requirements for monitoring and evaluating the supplier's performance.
- ***Quality Assurance Program Requirements.*** Procurement documents will require that each subcontractor have a documented quality system that implements portions or all of the requirements of this plan, as applicable. The extent of a supplier’s quality system will depend on the type and use of the service being procured.
- ***Right of Access.*** At each tier of procurement, the procurement documents will provide for access to supplier's facilities and records for inspection or audit by CB&I or its authorized representative.
- ***Documentation Requirements.*** Procurement documents at each tier of procurement will identify the documentation required to be submitted to CB&I for information, review, or approval and the time of submittal. The retention times and the disposition requirements for specific quality records will be prescribed.

- ***Questionable or Unusable Data.*** The procurement documents will include requirements for reporting and approving disposition of questionable or unusable data.

6.1.1 Review of Procurement Documents

The Site Supervisor will ensure that site-initiated procurement documents and changes transmitted to the prospective supplier include adequate requirements, performance standards, and quality criteria. The purchase requisition will then go through the proper approval process, including the CB&I CAM, the Project Engineer, and the Procurement Leader.

The review of changes and their effects will be completed prior to transmittal to the prospective supplier. This review will include the considerations that the appropriate requirements are specified, additional or modified performance criteria are determined, and analysis of exceptions or changes requested or specified by the supplier.

6.1.2 Source Evaluation and Selection

The selection of suppliers and subcontractors will be based on an evaluation of their capability to provide items and/or services in accordance with the specified requirements. Measures for evaluating and selecting procurement sources will be documented and may include one or more of the following:

- Evaluation of the supplier's history of providing an identical or similar service, which reflects the current capability
- Supplier's current QA records supported by documented qualitative and quantitative information that can be objectively evaluated
- Supplier's technical and quality capability as determined by a direct evaluation of its facilities and personnel, an evaluation of the effectiveness of the implementation of its quality system, and, in the case of subcontracted analytical data acquisition services, the successful analysis of a set of performance evaluation samples
- Approval of submittals pertaining to the items or services to be provided prior to use or initiation of the work on the project site.

6.1.3 Acceptance of Services

The procurement control will include flow-down provisions of the contract and site-specified task order. The acceptance methods used (e.g., source verification, receipt inspection, or technical verification of data produced) will be verified. Confirmation of specific characteristics will be performed at intervals and to a depth consistent with the service's complexity, quantity and frequency of procurement, and statement of work requirements.

6.1.4 Receipt Inspection and Verification

The Site QCSM or designee will develop and implement procedures for receipt inspection and verification of purchased items. These controls will provide for the following, as applicable:

- Verification that the items received are in accordance with purchase order requirements
- Inspection for evidence of breakage, damage, or other unfitness for use
- Verification that required documentation is received and acceptable
- Verification that the items conform to the supplier's published requirements that were provided, submitted, and approved.

6.1.5 Handling, Storage, Packaging, and Shipping

The handling, storage, cleaning, preservation, packaging, and shipping of items shall be controlled to prevent damage or deterioration that would jeopardize the specified performance of the items.

Procurement documents shall include the following:

- Requirements for sellers to establish special procedures, when necessary, to ensure cleanliness, identification, and proper handling
- Requirements for the preparation of items for shipment, as necessary, to prevent damage or deterioration of the supplied items
- Requirements for material and equipment storage instructions, when specified, to be available at the site well in advance of the arrival of material/equipment.

6.2 Subcontractor Quality Control

All subcontractors performing work for a project are responsible for compliance with the requirements of their respective subcontract. Subcontractors include organizations supplying quality-related items or services to the project. The overall responsibility for conformance to the quality requirements for the subcontracted items and services is retained by CB&I.

The requirements for personnel qualifications, technical performance levels, QC procedures, acceptability levels, and documentation will be included as part of the subcontract documents. The PM or designee will review the subcontract procurement documents to verify that QC requirements are passed on to the subcontractor.

The Site QCSM is responsible for the implementation of inspections, surveillance, document review, audits, and other QC activities for monitoring the subcontractor to verify compliance

with the contract and subcontract requirements. These activities will be documented on inspection reports, audit reports, field logs, or other forms appropriate to the function performed.

For field operations, the field QA/QC personnel will provide QC checks before, during, and at the completion of the subcontractor's activities to determine that the subcontractor is in compliance with the QC measures set forth by the contract, the applicable subcontract documents, and the subcontractor's approved QC plan, including:

- Meeting quality requirements
- Generating, controlling, and maintaining required documentation
- Performing and documenting required inspections and tests
- Identifying, reporting, and correcting nonconforming conditions
- Turnover to CB&I.

6.3 Analytical Laboratory Services

Analytical testing to ensure that the cleanup objectives are achieved will be performed using analytical laboratories off the project site as specified by the contract documents. The analytical testing requirements and related activities are described in Sections 4.4 and 4.6 of the CMI work plan.

6.3.1 Other Subcontractors

Subcontractors performing work other than laboratory-related activities will be monitored by the Site QCSM or field QA/QC personnel to verify conformance to the contract and subcontract quality requirements. The monitoring activities will include audits, surveillances, witnessing of inspections and tests, document reviews, and interfacing with the subcontractor's QC or project management. All monitoring activities will be documented on the appropriate form or included in the Daily Construction Log.

6.3.2 Subcontractor Noncompliance

Work performed by subcontractors that does not comply with the specified requirements will be identified, reported, controlled, tracked, and corrected.

7.0 Audits

Audits may be performed to verify compliance with aspects of the project documents. Audits will be performed with checklists and include a review of documents and records to determine if the CQAP and supporting procedures are being implemented. A site-specific assessment checklist for MSFC-027 is provided as Attachment 1 of this CQAP. The individual elements of the checklist are based on the site-specific requirements presented in Worksheet No. 14 of Appendix E.

An audit will note findings and observations. A finding will be a documented statement of fact concerning a noncompliance or deviation from established requirements. An observation will be a statement of fact regarding the potential for a noncompliance.

Audits will be performed by qualified personnel and include individuals who are technically knowledgeable in the areas to be assessed. Audit results will be documented and sent to the appropriate management.

7.1 Scheduling and Planning

Audits typically will be performed as early in the duration of the activity as practical and continue until completion of the activity. The Auditor will provide written notification informing the organization to be audited informing of the scheduled audit date.

Audit schedules may be prioritized based on the importance of the activity, previously identified deficiencies of the activity, and the size or complexity of the activity. The Site QCSM will develop a schedule for the performance of audits. The audit schedule will be posted and distributed to project staff and managers. Unscheduled audits may be used to supplement scheduled audits when conditions warrant.

7.2 Internal Performance Audits

Performance audits are conducted on site by an auditor who directly observes specific project activities to determine if these activities are being conducted in accordance with the contract requirements. The Auditor will be technically competent in the activities to be audited and independent of the subject work. The audit of project deliverables will be for the purpose of determining compliance with the procedures set forth in this plan (i.e., technical reviews, documentation of reviews, document control, and other procedures). Checklist items to be examined may include the following:

- Availability and implementation of approved work instructions
- Field documentation and checking
- Subcontractor performance
- Review of personnel training and qualification records
- Review of process controls and associated records to determine compliance with CMI work plan or plans
- Review of work areas for evidence of implementation of procedures and instructions
- Review of documentation indicating compliance with plan, document and design preparation, review, and approval procedures
- Change/nonconformance documentation and disposition.

7.3 Execution of Audits

Audits will normally be conducted as described in Sections 7.3.1 through 7.3.4.

7.3.1 Pre-Audit Meeting

The Auditor will conduct a brief pre-audit meeting with management or supervisory personnel of the organization to be audited to confirm the audit scope, discuss the audit sequence, establish a tentative time for the post-audit meeting, and establish channels of communication.

7.3.2 Audit

The Auditor will follow checklists, developed prior to the audit, to evaluate existing project records provided by designated project staff and may observe work in progress. If noncompliances are observed or uncovered during the audit, the Auditor will discuss these potential findings with the individuals being audited so that findings are accurate and understood. In addition to identifying noncompliances, the audit results may include observations of notable areas of strength.

7.3.3 Exit Meeting

Upon completion of the audit, the Auditor will discuss observations and findings with the group or organizations audited and, whenever possible, agree on corrective actions. Minor administrative findings, which can be resolved to the satisfaction of the audit team during the audit, are not required to be documented as items requiring corrective actions. All findings that are not resolved during the course of the audit and findings affecting quality will be noted on the audit checklists.

7.3.4 Audit Report

The Auditor will prepare and issue an audit report, which provides the following information as a minimum:

- Unique audit number
- Description of the audit scope
- Audited organization and location
- Persons contacted during the audit activities
- Audit dates
- Summary of audit results, including a statement on the effectiveness of the quality management elements which were audited
- Suggested opportunities for improvement in the form of observations and comments
- Description of each reported audit finding in sufficient detail to enable corrective action to be performed
- Due date for completion of corrective actions and/or audit response, typically 30 days.

Audit results will include findings and observations. Findings are items which require corrective action. Findings will be documented on an Audit Finding Report or equivalent. Observations are nonmandatory recommendations to improve project quality. The Auditor may make recommendations for corrective actions; however, the ultimate responsibility for taking corrective action lies with the auditee. The report will be signed by the Auditor. Checklists need not be included with the audit report but should be maintained as records in the project central files.

The Auditor will prepare an audit report cover letter or memorandum for signature and issuance by the CB&I PM. The audit report will be issued to the management of the audited organization.

7.4 Response

The response prepared by the auditee will clearly state for each finding the corrective action taken or planned, the cause of the deficiency, and the action to prevent recurrence. For each observation, the response will indicate actions taken or planned for quality improvement. The response will, at a minimum, be sent to the CB&I PM and the Auditor.

7.5 Follow-Up

The Site QCSM or designee will track all audit findings to assure that all findings are appropriately addressed and examine audit findings for significant conditions adverse to quality. The Site QCSM or designee will maintain the status of audit findings for active audits and prepare correspondence relating to overdue audit responses. When responses are overdue, the Site QCSM or designee will notify the responsible organization by telephone that responses are overdue and prepares a memorandum or letter indicating a new response due date. If a request for extension of response is received, an evaluation will be made and a formal response submitted to the requesting organization.

The CB&I CAM or designee, upon receipt of responses to audit findings, will coordinate with the Auditor for the evaluation of responses. The responsible evaluator will document the results of the evaluation. Unacceptable responses will be noted together with the specific reason for rejection. The CB&I CAM or designee will prepare transmittal correspondence to inform the responsible organization of a new response due date.

Follow-up actions, possibly including reaudit of deficient areas, will be taken to verify that corrective action is accomplished as scheduled. The Site QCSM or designee will assure that verifications of corrective action implementation are accomplished and document the results of verification.

Following acceptance and verification of all corrective actions, an audit closure document will be issued by the Auditor to the same distribution list as the audit report. The closure document will indicate that corrective actions have been satisfactorily completed and contain a statement that the audit is closed.

7.6 Documentation

The following documents generated before, during, and after the audit process will be maintained in the record file system in accordance with Chapter 4.0 of this CQAP.

- Audit report
- Audit responses
- Audit closure letter
- Correspondence related to the audit.

8.0 Construction Inspections

The primary function of inspections is to establish the measures required to verify the quality of work performed and compliance to the specified requirements, including the inspection of materials and workmanship before, during, and after each work element.

8.1 Preparatory Inspections and Meetings

Along with representatives of RSA, the PM, the Site QCSM, and the Site Supervisor will conduct preparatory inspections and meetings at MSFC-027. Preparatory inspections and meetings will be performed prior to starting definable features of work. Typical definable tasks and related inspection requirements can be modified based on project requirements. Where more than one work element is included in one work activity, one preparatory meeting may cover several work elements for the site. Likewise, a number of work activities, where feasible, can be combined into individual preparatory meetings. The preparatory inspection and meeting will be attended by the Army, applicable CB&I personnel, and subcontractors involved with the feature of work and responsible field QA/QC personnel. The Site QCSM will be notified in advance to coordinate participation in the inspection. The preparatory meeting may include but not be limited to the following:

- Review the basic elements of the work.
- Review documentation and reporting requirements.
- Review pertinent contract requirements.
- Review materials and equipment documentation for required tests, submittals, and approvals.
- Review required QC inspections and test requirements.
- Establish that the preliminary work required to begin the feature of work is complete and conforms to approved drawings and submittal data.
- Establish that the required materials and equipment for commencement of the work are on hand or available for use on the feature of work and that all equipment is properly calibrated and in proper working condition.
- Ensure the securing of utility clearances (digging permits).
- Address basic site health and safety considerations.
- Establish hours of operation.

Preparatory inspections will be reported on the daily construction logs. The detailed results of the preparatory inspection will be documented.

Personnel performing work activities affected by a preparatory inspection will be directed in the acceptable level of the workmanship involved for the feature of work covered by the inspection.

8.2 Initial Inspections

The initial inspection may be conducted at the beginning of the work element. The inspection will be performed as soon as it is determined that a sufficient portion of the work element has been accomplished to evaluate the following criteria:

- Compliance with the CMI work plan, drawings, submittals, and other contract requirements
- Assurance that erosion control devices are being inspected weekly and also within 72 hours of any qualifying precipitation event (any precipitation of 0.75 inch or greater in any 24-hour period)
- Acceptable levels of workmanship
- Quality of materials
- Resolution of differences (when applicable).

Initial inspections will include participation of the responsible personnel, including appropriate subcontractors and the field QA/QC personnel involved with the work element. The Army will be notified in advance of each initial inspection to coordinate participation in the inspection. The initial inspections will be reported on the daily construction logs.

8.3 Follow-Up Inspections

Follow-up inspections will be performed throughout the course of work. The frequency of the follow-up inspections will be contingent upon the extent of work being performed on each particular work element. Follow-up inspections will be performed on all ongoing work. Follow-up inspections will also be performed on each completed work phase prior to starting subsequent phases. Deficiencies identified will be corrected in a timely manner or identified on a punch list which will be used as a tracking method until the work is completed and verified and the punch list item signed off. Deficiencies which would be made inaccessible for correction by subsequent work activities will be corrected and accepted prior to starting the new work.

The follow-up inspections will be reported on the daily construction logs and copies of the inspection forms as applicable.

8.4 Pre-Final Inspection

Near the completion of the work or increment thereof as established (e.g., completion of the erosion control structures such as silt fencing and construction entrance), the CB&I Site QCSM shall conduct an inspection of the work and develop a punch list of items which do not conform to the approved CMI plan. The list of deficiencies will become a part of the CQC documentation, which will include the estimated date by which the deficiencies will be corrected. The CB&I Site QCSM will then make a second inspection to ensure that all deficiencies have been corrected. Once this is completed, CB&I will notify the Site QCSM that the site is ready for Pre-Final Inspection.

The Army will perform the Pre-Final Inspection to verify that the site work has been satisfactorily completed. A pre-final punch list may be developed by the Site QCSM as a result of this inspection. The CB&I Site QCSM will then make sure that all items on this list have been corrected and so notify the PM so that a Final Inspection with RSA can be scheduled. Items noted in the Pre-Final Inspection will be completed in a timely manner. These inspections and deficiency corrections will be accomplished within the time frame slated for completion of the project.

8.5 Final Inspection

The CAM, the Site Supervisor, the Site QCSM, and the Army will be in attendance at this inspection. The RSA Representative will formally schedule the Final Inspection based upon completion of the results of the Pre-Final Inspection. Notice will be given to the Army at least 14 days prior to the Final Inspection and must include CB&I's assurance that all the specific items previously identified as being unacceptable will be completed by the date scheduled for the Final Inspection.

CB&I will prepare the punch list. The punch list will identify all nonconforming or incomplete work. Upon completion of the punch list items, a second inspection will be conducted by RSA and CB&I to verify all of the items conform to the requirements. The QA/QC Director will be the final authority to accept that all of the punch list items have been corrected.

8.6 Inspection Documentation

The Site QCSM is responsible for the maintenance of the inspection records. Inspection records will be legible and clearly provide all information necessary to verify the items or activities inspected conform to the specified requirements or, in the case of nonconforming conditions, provide evidence that the conditions were brought into conformance or otherwise accepted by the Army.

9.0 Analytical Testing

The Army's installation-wide QAPP (Shaw, 2013) establishes the measures for management and control of analytical testing activities affecting the quality of remedial actions. Primary responsibility for control of construction (through performance of analytical QC testing) resides with CB&I (including its subcontractors) and shall be done in accordance with the CMI work plan.

Task-specific programs of field controls, consisting of inspections and verification tests, will be utilized to verify that the CMI work plan is adhered to during implementation of the corrective measures, where applicable. However, the installation-wide QAPP presents the overall general principles that are employed in any chemical analysis performed as part of the construction. Detailed analytical testing requirements for the MSFC-027 CMI are provided in site-specific Uniform Federal Policy worksheets (MSFC-027 CMI work plan Appendix E).

10.0 References

Alabama Soil and Water Conservation Committee (ASWCC), 2014, ***Alabama Handbook for Erosion Control, Sediment Control, and Stormwater Management of Construction Sites and Urban Areas***, September.

A.T. Kearney, Inc., 1989, ***Interim RCRA Facility Assessment of the Marshall Space Flight Center, Huntsville, Alabama***, prepared for U.S. Environmental Protection Agency, Region IV, July.

CB&I Federal Services LLC (CB&I), 2015a, ***RCRA Facility Investigation Report, RSA-147, RSA-148, and RSA-149, Groundwater Sites Groundwater Units GW-03, GW-04, and GW-05, Operable Unit 19, U.S. Army Garrison-Redstone, Madison County, Alabama***, September.

CB&I Federal Services LLC (CB&I), 2014, ***Revision 1, RCRA Facility Investigation Report, MSFC-027, Inactive Waste Accumulation Area, Operable Unit 18, U.S. Army Garrison-Redstone, Madison County, Alabama***, June.

Geraghty and Miller, Inc. (G&M), 1991, ***Final Identification and Evaluation of Potential Solid Waste Management Units and Areas of Concern, Redstone Arsenal, Alabama***, prepared for U.S. Army Corps of Engineers, Huntsville, February.

National Aeronautics and Space Administration (NASA), 2012, ***Groundwater Monitoring Report for 2011, prepared for National Aeronautics and Space Administration Marshall Space Flight Center***, February.

Shaw Environmental & Infrastructure, Inc. (Shaw), 2013, ***Final Rev. 1, Installation-Wide Quality Assurance Program Plan for the Program Management Contract, Volume I and Volume II , U.S. Army Garrison-Redstone, Madison County, Alabama***, June.

Shaw Environmental, Inc. (Shaw), 2007, ***Final Interim Record of Decision, Interim Remedial Action for Installation-Wide Groundwater, Redstone Arsenal, Madison County, Alabama,*** prepared for the U.S. Army Corps of Engineers, Savannah District, Savannah, Georgia, September.

U.S. Army Garrison-Redstone (Army), 2012, ***Redstone Arsenal Environmental Site Access Control Program***, Redstone Arsenal Regulation 200-7, September.

TABLES

Table 4-1

Typical Daily Construction Log
Redstone Arsenal, Madison County, Alabama

Date: _____

Contractor: _____ Project No.: _____

Contract Title: _____ Report No.: _____

Area: _____ Unit: _____ Work: Contract (✓)_____ WO # _____

Shift: _____ Hrs. Wkd: From_____ To _____ Weather _____
Temp. L H

Manpower	No.	Total Hrs.	Major Equipment	No.	Total Hrs.

Description of Work Performed Today:

Remarks by Contractor: (Delays, interruptions, deviations, extra work activities, unusual occurrences, etc., relevant to today's work.)

For Contractor: Title: Date:

USACE Comments and/or Exceptions:

For USACE: Title: Date:

Table 5-1

Nonconformance Report
Redstone Arsenal, Madison County, Alabama

Linked w/Variance No: Page __of __

Project Name:	Project Number:
Date of Issue:	Report Number:
-- Nonconformance Report --	
I. Description of the Nonconformance, include requirement violated: (by the person identifying the nonconformance) Identified by: Date:	
Root Cause of nonconformance:	
II. Recommended Corrective Action: (by the person identifying the nonconformance and the review committee)	
To Be Performed by:	Date:
To Be Verified by:	Date:
III. Corrective Action Implementation: (by those implementing the corrective action)	
Was Performed by:	Date:
Was Verified by:	Date:
How was the Corrective Action Verified?	
IV. Nonconformance Resolution, include action taken to preclude recurrance: (by the review committee)	
Affected Organization:	**-- Signatures --**
<u>Distribution List:</u>	Requested by: _____ Date: _____ (printed name and date) Signature:
	QC Approved by: _____ Date: _____ (printed name and date) Signature:
	Proj. Mgr. Approval:_____ Date: _____ (printed name and date) Signature:
	Client QA Approval: _____ Date: _____ (printed name and date) Signature:

Table 5-2

Nonconformance Report Tracking Register

PROJECT NO.
CONTRACT NO.
NONCONFORMANCE REPORT TRACKING REGISTER

NCR NO.	DESCRIPTION OF NONCONFORMANCE	DATE ISSUED	DATE CLOSED	COMMENTS

Table 5-3

Stop Work Notice
Redstone Arsenal, Madison County, Alabama

Project Name/Location: _____ Project No. _____ D.O. No. _____

S.W.O. No. _____ Date: _____ Page _1_ of ___

1. Written Notice Issued to: Name: _____ Title: _____ Org.: _____	2. P.O. # or Activity: _____ 3. Location: _____ 4. Issued by (name): _____ Issued by (title): _____
5. Verbal Notice Issued to: Name: _____ Title: _____	Date: _____ Time: _____
6. Associated NCR No.: _____	7. Associated CAR No.: _____
8. Stop Work Order Condition Description:	Attachment _____
9. Remedial Action Required: By Whom: _____ Required Remedial Action Determined by: Project Manager: _____ CQA Director/Field CQA Coordinator: _____	Attachment _____ By When: _____ Date: _____ Date: _____
10. Follow-up of Remedial Action Taken: Verbal Notice to Resume Operations Given to: Name: _____ Title: _____ Stop Work Order Cancellation Authorized by: CQA Director/Field CQA Coordinator: _____	Attachment _____ Date: _____ Time: _____ Date: _____

Table 5-4

Stop Work Notice Log
Redstone Arsenal, Madison County, Alabama

SWO No.	Action Party/Organization	Subject	Date Issued	Date Closed

ATTACHMENT 1

FIELD INSPECTION CHECKLIST

	Contract No: W91ZLK-05-D-0006 **EPA ID No.** AL7 210 020 742	**Controlling Document:** **Corrective Measures Implementation (CMI) Plan**
Location: Redstone Arsenal, Madison County, Alabama		
Inspection Type: Field Inspection Checklist **Subject:** Rev. 0 MSFC-027 CMI Work Plan	**Inspection Date:**	

Descriptor / Requirements	Comments	Results
4.0 Corrective Measures Implementation		
This section provides an overview of the field activities planned to complete corrective measures at MSFC-027. Work presented in this section will be completed in accordance with the procedures described in the CMI Work Plan and other approved documentation as appropriate. MSFC-027 CMI Work Plan Chapter 4.0		
4.1 General Scope		
The general scope of work (SOW) includes the following: • Pre-excavation design optimization soil sampling • Mobilization and demobilization • Utility clearance and marking • Protection of existing monitoring wells • Construction of erosion controls • Vegetation clearing and debris removal • Surveying and marking the proposed excavation and stockpile area • Excavation of contaminated soil • Confirmation sampling and analysis of the excavated area • Waste characterization sampling • Transport and disposal of arsenic-contaminated soils as special waste (nonhazardous) at a Subtitle D landfill • Site restoration, including application of backfill (laboratory demonstrated clean soil) and topsoil, and revegetation with approved grass mixtures MSFC-027 CMI Work Plan Chapter 4.0		

Location: Redstone Arsenal, Madison County, Alabama		
Inspection Type: Field Inspection Checklist **Subject:** MSFC-027 CMI Work Plan		
Descriptor / Requirements	**Comments**	**Results**
4.1.1 Procurement and Subcontracting		
Subcontracted services and imported materials required for the completion of the project may include the following: • Soil sampling utilizing direct-push technology (DPT) • Vegetation clearing • Analytical laboratory • Waste transportation and disposal • Surveying • Common Fill • Topsoil • Aggregate – crusher run, riprap, drainage stone • Erosion and sediment controls • Seed, fertilizer, and mulch • Heavy-duty plastic sheeting • MSFC-027 CMI Work Plan Chapter 4.0		
The following equipment may be utilized to complete field remediation activities: • Excavator/backhoe to excavate contaminated soil • Front-end loader to consolidate soil and move fill material • Wheel loader to manage segregated waste, debris, and move import fill material • Large capacity water truck (or equivalent) for site dust control and hydration of imported material for compaction (Note: care will be taken not to oversaturate the ground) • Portable fuel tank (e.g., mounted on pickup truck) • Miscellaneous support equipment (e.g., portable storage, computers, copier, fax machine, radios, relief station, eyewash, etc.) • MSFC-027 CMI Work Plan Chapter 4.0		
Support equipment and materials will be procured through equipment vendors and scientific supply vendors and shipped directly to the site. Office machines in Building 7471 will be used to support the MSFC-027 work. MSFC-027 CMI Work Plan Chapter 4.0		

Location: Redstone Arsenal, Madison County, Alabama

Inspection Type: Field Inspection Checklist
Subject: MSFC-027 CMI Work Plan

Descriptor / Requirements	Comments	Results
4.1.2 Field Personnel		
Field personnel required to complete the field activities may include the following: • site supervisor • site safety officer • field construction quality control system manager • One or two equipment operators • Two laborers The number and schedule of personnel will be adjusted during the project as required for completion. MSFC-027 CMI Work Plan Chapter 4.0		
4.2 Pre-Excavation Design Optimization Sampling Event		
Prior to mobilization for excavation activities, soil sampling will be performed to confirm elevated arsenic concentrations at former borings MSFC-027-SB022, -SB023, -SB024, -SB026, and –SB028. Additionally, soil samples will be collected at four step out soil borings at each location and analyzed for TAL metals contingent on sampling results of the resampling of the former boring location. Note: the step out soil samples will only be analyzed if arsenic concentrations detected in the confirmation samples are greater than the CG for arsenic (18 mg/kg) and are determined not to be naturally occurring. The locations of the soil samples are shown in Figure 4-2 of the CMI work plan. Sampling activities will follow the CMI Work Plan, as well as other controlling documents, such as the RSA Installation-Wide (IW) Work Plan, the IW Safety and Health Plan, the IW Quality Assurance Program Plan (QAPP), the site-specific Construction QC Plan, and the site-specific Safety and Health Plan. MSFC-027 CMI Work Plan Chapter 4.0		
4.2.1 Design Optimization Sampling at Former Soil Boring MSFC-27-SB022		
Soil samples will be collected from a total of five soil borings at former boring location MSFC-027-SB022. One boring (SB022A) will be a composite soil sample collected from 16 to 18 feet bgs for analysis of TAL Metals. Step-out samples (22BW01 through 22BW04) will be collected five feet from SB022A (at former location MSFC-027-SB022) to the east, north, west, and south. A composite sample will be collected from 16 to 18 feet bgs at these locations for analysis of TAL Metals, contingent on results of sample SB022A. The location of the planned soil samples are shown in Figure 4-2 of the CMI Work Plan. If the arsenic concentration detected in confirmation sample SB022A is below the CG of 18 mg/kg, or if the arsenic concentration is deemed to be natural occurring based on a geochemical evaluation, the step-out samples will not be analyzed since no corrective measures will be required for deep soil at this location. MSFC-027 CMI Work Plan Chapter 4.0		

Location: Redstone Arsenal, Madison County, Alabama

Inspection Type: Field Inspection Checklist
Subject: MSFC-027 CMI Work Plan

Descriptor / Requirements	Comments	Results
4.2.2 Design Optimization Sampling at Former Boring MSFC-027-SB023		
Soil samples will be collected from a total of five soil borings at former boring location MSFC-027-SB023. One boring (SB023A) will be a composite soil sample collected from 16 to 18 feet bgs for analysis of TAL Metals. Step-out samples (23BW01 through 23BW04) will be collected five feet from SB023A (at former location MSFC-027-SB023) to the east, north, west, and south. A composite sample will be collected from 16 to 18 feet bgs at these locations for analysis of TAL Metals, contingent on results of sample SB023A. The location of the planned soil samples are shown in Figure 4-2 of the CMI Work Plan. If the arsenic concentration detected in confirmation sample SB023A is below the CG of 18 mg/kg, or if the arsenic concentration is deemed to be natural occurring based on a geochemical evaluation, the step-out samples will not be analyzed since no corrective measures will be required for deep soil at this location. MSFC-027 CMI Work Plan Chapter 4.0		
4.2.2 Design Optimization Sampling at Former Boring MSFC-027-SB024		
Soil samples will be collected from a total of five soil borings at former boring location MSFC-027-SB024. One boring (SB024A) will be a composite soil sample collected from 6 to 8 feet bgs for analysis of TAL Metals. Step-out samples (24BW01 through 24BW04) will be collected five feet from SB024A (at former location MSFC-027-SB024) to the east, north, west, and south. A composite sample will be collected from 6 to 8 feet bgs at these locations for analysis of TAL Metals, contingent on results of sample SB024A. The location of the planned soil samples are shown in Figure 4-2 of the CMI Work Plan. If the arsenic concentration detected in confirmation sample SB024A is below the CG of 18 mg/kg, or if the arsenic concentration is deemed to be natural occurring based on a geochemical evaluation, the step-out samples will not be analyzed since no corrective measures will be required for deep soil at this location. MSFC-027 CMI Work Plan Chapter 4.0		

Descriptor / Requirements	Comments	Results
4.2.2 Design Optimization Sampling at Former Boring MSFC-027-SB026		
Soil samples will be collected from a total of five soil borings at former boring location MSFC-027-SB026. One boring (SB026A) will be sampled at two intervals (10 to 12 and 16 to 18 feet bgs) for analysis of TAL Metals. Step-out samples (26BW01 through 26BW04) will be collected five feet from SB026A (at former location MSFC-027-SB026) to the east, north, west, and south. A composite sample will be collected from 10 to 12 and 16 to 18 feet bgs at these locations for analysis of TAL Metals, contingent on analytical results of SB026A. The location of the planned soil samples are shown in Figure 4-2 of the CMI Work Plan. If the arsenic concentrations detected in confirmation samples are below the CG of 18 mg/kg, or if the arsenic concentrations are deemed to be natural occurring based on a geochemical evaluation, the delineation samples will not be analyzed since no corrective measures will be required for deep soil at this location. MSFC-027 CMI Work Plan Chapter 4.0		
4.2.2 Design Optimization Sampling at Former Boring MSFC-027-SB028		
Soil samples will be collected from a total of five soil borings at former boring location MSFC-027-SB028. One boring (SB028A) will be a composite soil sample collected from 22 to 24 feet bgs for analysis of TAL Metals. Step-out samples (28BW01 through 28BW04) will be collected five feet from SB028A (at former location MSFC-027-SB028) to the east, north, west, and south. A composite sample will be collected from 22 to 24 feet bgs at these locations for analysis of TAL Metals, contingent on results of sample SB028A. The location of the planned soil samples are shown in Figure 4-2 of the CMI Work Plan. If the arsenic concentration detected in confirmation sample SB028A is below the CG of 18 mg/kg, or if the arsenic concentration is deemed to be natural occurring based on a geochemical evaluation, the step-out samples will not be analyzed since no corrective measures will be required for deep soil at this location. MSFC-027 CMI Work Plan Chapter 4.0		
4.3 Preliminary Activities		
Preliminary activities include mobilization, requirements for base access, obtaining digging permits and utility marking, surveying, and protection of existing wells and features. All field personnel will follow this work plan, as well as other controlling documents, such as the RSA IW Work Plan, the IW Safety and Health Plan, the IW QAPP, the site-specific Construction QC Plan, and the site-specific Safety and Health Plan. MSFC-027 CMI Work Plan Chapter 4.0		

Location: Redstone Arsenal, Madison County, Alabama

Inspection Type: Field Inspection Checklist
Subject: MSFC-027 CMI Work Plan

Descriptor / Requirements	Comments	Results
4.3.1 Mobilization		
Mobilization will include deployment of personnel, equipment, subcontractors, and materials necessary to commence CMI activities. Mobilization will include activities at CB&I's Knoxville office and CB&I's field office at RSA. MSFC-027 CMI Work Plan Chapter 4.0		
Mobilization activities at the Knoxville office will include the procurement of rented items and assembly and packing of equipment and supplies for ground transportation to the site. MSFC-027 CMI Work Plan Chapter 4.0		
After mobilization, site-specific training will be conducted for CB&I personnel and subcontractor personnel. This training will include health and safety requirements, project objectives, entry onto RSA, site access control, security procedures, and communications procedures. MSFC-027 CMI Work Plan Chapter 4.0		
4.3.2 Access to Redstone Arsenal		
New CB&I personnel and subcontractor personnel will register at the Redstone Arsenal Visitors Center at Gate 9. Personnel with prior approval from a host RSA organization will be issued a personnel badge upon presentation of proper identification. Temporary passes may be required for some vehicles. Military and government personnel should present their military or government identification and do not require a host RSA organization. MSFC-027 CMI Work Plan Chapter 4.0		
Personnel may access the RSA via any active gate, but should note that gate access hours vary. Gate 9 at Rideout Road is open 24 hours per day 7 days per week. Gate 1 at Martin Road is open 5 days per week (Monday-Friday) from 0530 hrs. to 2100 hrs. Gate 3 at Redstone Road is open 5 days per week (Monday-Friday) from 0530 hrs. to 1300 hrs. MSFC-027 CMI Work Plan Chapter 4.0		

Location: Redstone Arsenal, Madison County, Alabama

Inspection Type: Field Inspection Checklist
Subject: MSFC-027 CMI Work Plan

Descriptor / Requirements	Comments	Results
4.3.3 Digging Permit and Utility Marking		
Permitting required prior to beginning CMI activities is a digging permit administered by the Directorate of Public Works. The digging permits include locating and marking any utilities which may be present in the vicinity of the proposed intrusive work. Notification should by telephone to 256.876.9881 within 14 days of beginning intrusive work. MSFC-027 CMI Work Plan Chapter 4.0		
Digging permits must be renewed every 30 days. Renewals should be requested at least 1-1/2 weeks prior to expiration of the current digging permit to avoid temporary shutdowns. MSFC-027 CMI Work Plan Chapter 4.0		
4.3.4 Site Control		
CB&I will use the temporary construction fencing materials, barricades, and warning tape, as necessary, to delineate the site exclusion zone, contamination reduction zone, and site support zone in compliance with the SSHP (Appendix C). MSFC-027 CMI Work Plan Chapter 4.0		
Warning signs will be posted at conspicuous locations around the perimeter of the construction areas to discourage unauthorized entry. An equipment storage and material laydown area will be designated during mobilization. MSFC-027 CMI Work Plan Chapter 4.0		
4.3.5 Storm Water Erosion and Sediment Controls		
Storm water management and erosion and sediment control will be provided according to the *Alabama Handbook for Erosion Control, Sediment Control and Stormwater Management on Construction Sites and Urban Areas* (Alabama Soil and Water Conservation Committee [ASWCC], 2014). MSFC-027 CMI Work Plan Chapter 4.0		
Installation of temporary controls will be coordinated to maintain effective and continuous control of erosion and pollution. The primary erosion control techniques used will be silt fencing and hay bales. MSFC-027 CMI Work Plan Chapter 4.0		

Location: Redstone Arsenal, Madison County, Alabama

Inspection Type: Field Inspection Checklist
Subject: MSFC-027 CMI Work Plan

Descriptor / Requirements	Comments	Results
Erosion control devices will be inspected weekly, and also within 72 hours of any qualifying precipitation event (any precipitation of 0.75 inches or greater in any 24-hour period). Sediment deposits will be manually removed from the silt fence after each rainfall or when sediment reaches one-half of the barrier height. Removed sediment will be added to the contaminated soil for subsequent disposal. MSFC-027 CMI Work Plan Chapter 4.0		
Damaged erosion control devices and damaged areas around and beneath the devices will immediately be repaired. Upon completion of the project, erosion and sedimentation control devices will be removed. MSFC-027 CMI Work Plan Chapter 4.0		
4.3.6 Vegetation Clearing		
CB&I will clear brush/vegetation currently covering the injection and excavation areas at MSFC-027 in preparation for the soil removal action. It is expected that manual and mechanical (e.g., chainsaw, line trimmer, heavy equipment) means will be used to accomplish the brush/vegetation clearing task. MSFC-027 CMI Work Plan Chapter 4.0		
4.3.7 Locating, Marking, and Surveying of Excavation Areas		
A licensed land surveyor will be subcontracted to delineate the project work boundary, mark the excavation, and set the grades prior to and during placement of excavated material before backfilling of the areas. MSFC-027 CMI Work Plan Chapter 4.0		
The surveyor will locate these areas based on coordinates provided by CB&I and will mark items in the field with highly visible wooden stakes, tape, or pin flags. Surveying methods will follow the procedures specified in the construction quality assurance plan (CQAP) provided in Appendix D. MSFC-027 CMI Work Plan Chapter 4.0		
4.3.8 Protection of Existing Monitoring Wells		
No wells are located within the MSFC-027 proposed excavation footprint. One bedrock well (Z-RS1237) is located within close proximity of the work zones at MSFC-027 and will be conspicuously marked in the field for protection during construction (i.e., safety fencing will be placed around the monitoring well). Although CB&I will safeguard existing monitoring wells, if a monitoring well is inadvertently damaged, the well will be closed in accordance with the methods provided in Standard Operating Project Procedure (SOPP) No. 21, Monitoring Well and Borehole Abandonment (Shaw, 2013d) and according to the Alabama Environmental Investigation and Remediation Guidance (ADEM, 2005). Wells damaged as part of the corrective measure activities at MSFC-027 will be replaced in kind. MSFC-027 CMI Work Plan Chapter 4.0		

Location: Redstone Arsenal, Madison County, Alabama

Inspection Type: Field Inspection Checklist
Subject: MSFC-027 CMI Work Plan

Descriptor / Requirements	Comments	Results
4.3.9 Daily Reports		
The requirements for preparation and submittal of daily project documentation are outlined in the CQAP (Appendix D). As indicated in the CQAP, the daily reports (including daily construction logs, etc.) will be provided to the Project Manager or designee during CMI activities. The report will include a running inventory of excavated material. MSFC-027 CMI Work Plan Chapter 4.0		
4.4 Excavation Activities		
The excavation areas are summarized in Chapter 3.0 of the CMI work plan. Water will be used during excavation and hauling activities to control fugitive dust, if necessary. Excavated waste/soil will not be reused as clean fill. MSFC-027 CMI Work Plan Chapter 4.0		
Spoils will be placed a minimum of 3 feet from the edge of the excavation. MSFC-027 CMI Work Plan Chapter 4.0		
The excavated material will be stockpiled or staged prior to waste characterization sampling and off-site disposal. The excavated material will be staged on impervious material such plastic sheeting and covered with waterproof material (i.e., tarpaulin or 10-mil plastic sheeting). Containment should control runoff, leaching, or fugitive dust emissions. MSFC-027 CMI Work Plan Chapter 4.0		
Excavation will be accomplished according to the Safety and Health Regulations for Excavations (Occupational Safety and Health Administration 29 CFR Part 1926 Subpart P). For excavations deeper than four feet, soils will be excavated to maintain stable sidewalls (e.g., use of slide rail or sloped or benched to 1½:1 horizontal to vertical). Shoring for excavations over 20 feet deep shall be designed by a registered Professional Engineer and shoring installed shall be approved and signed off by a registered Professional Engineer. MSFC-027 CMI Work Plan Chapter 4.0		
Soil generated by benching/sloping near the perimeter of the excavations will be segregated and sampled to determine if it may be used for backfill. MSFC-027 CMI Work Plan Chapter 4.0		
Dust at the sites will be controlled with water using a water truck with hose and sprayers and mulch such as straw. CB&I will apply water to dry exposed areas until the surface is wet and repeat as needed. Water will be applied at rates so that runoff does not occur. CB&I will not use polymers, tackifiers, stabilizers, or chlorides for dust control. Dust suppression will commence when aerosol levels in the work area or directly downwind reach 2.5 milligrams per cubic meter. This level is ½ the Occupational Safety and Health Administration particulate not otherwise specified threshold respirable fraction. Measurements will be collected during CMI using a Data Ram PDR 1000 or equivalent real-time aerosol monitor. MSFC-027 CMI Work Plan Chapter 4.0		

Location: Redstone Arsenal, Madison County, Alabama

Inspection Type: Field Inspection Checklist
Subject: MSFC-027 CMI Work Plan

Descriptor / Requirements	Comments	Results
4.4 Confirmation Sampling		
The excavations at MSFC-027 address surface and subsurface soil contamination. Following completion of the proposed excavations, soil samples will be collected around the perimeter sidewalls and floor within the MSFC-027 proposed excavation areas to ensure that the soil contaminant concentrations do not exceed the CGs for arsenic (15 mg/kg surface soil, 18 mg/kg subsurface soil), pesticides (DDD [3.09 mg/kg], DDE [2.85 mg/kg], and DDT [3.30 mg/kg]), or Aroclor 1260 (0.5 mg/kg). MSFC-027 CMI Work Plan Chapter 4.0		
Confirmation samples will be collected around the perimeter of the soil excavation on each sidewall. A multipoint composite sample with a minimum of five aliquots will be collected per 50 feet of sidewall from the surface of the soil to depth. Because the depth of the excavation is expected to range from 1 to 3 feet, each confirmation sample will represent a maximum sidewall area of 150 square feet. If the sidewall confirmation samples do not achieve the CG, the excavation will be expanded out a minimum of 5 feet and resampled. MSFC-027 CMI Work Plan Chapter 4.0		
Confirmation samples will also be collected from the floor (bottom) of each open excavation. For the excavation floor, confirmation samples will be collected for maximum floor areas equal to 50- by 50-foot sections of the floor (2,500 square feet). The multipoint sample will include a center point of the 50- by 50-foot floor section plus aliquots from the north, south, east, and west quadrants of the floor area. If floor samples collected exceed CGs and groundwater is not encountered, excavation of that grid will resume an additional 1 foot, where another confirmation sample will be collected from the same grid. MSFC-027 CMI Work Plan Chapter 4.0		
The confirmation soil samples from the MSFC-027 excavation area will be analyzed for TAL metals, pesticides, and PCBs using EPA Test Methods for Evaluating Solid Waste, Physical/Chemical Methods (SW-846) per the RSA SAP. MSFC-027 CMI Work Plan Chapter 4.0		
Samples from the perimeter and the floor of the shallow excavations (0 to 4 foot bgs) will be collected by stainless-steel spoon and placed in a stainless-steel bowl. Aliquots from deeper excavations (greater than four feet in depth) will be collected from an excavator bucket. Debris such as grass, roots, or gravel will be removed, and the soil will be thoroughly mixed (homogenized) and then placed in the appropriate sample containers in accordance with SOPP Nos. 2.0, 5.0, 6.0, and 24.0 (Appendix E). Sample collection logs will be filled out to document the sampling in accordance with SOPP No. 1.0. MSFC-027 CMI Plan Section 4.0		
4.5 RDW/IDW Management		
Other remediation-derived waste (RDW)/investigative derived waste (IDW) generated during the CMI activities at MSFC-027 is expected to include soil cuttings, decontamination fluids, and disposable personal protective equipment (PPE). MSFC-027 CMI Plan Section 4.0		

Location: Redstone Arsenal, Madison County, Alabama

Inspection Type: Field Inspection Checklist
Subject: MSFC-027 CMI Work Plan

Descriptor / Requirements	Comments	Results
AAC 335-14-3-01(2) allows the use of generator knowledge in the hazardous waste determination process. MSFC-027 CMI Plan Section 4.0		
Generator knowledge consists of evaluating the following factors: • Process knowledge – site processes are evaluated to determine if any activity might have generated a listed waste which still persists in soil or groundwater. • Past IDW management practices – IDW has been managed at RSA for over 20 years. Changes to regulations directing this management have been minor. The Army intends to follow management practices which have been accepted by ADEM during prior investigations. • Sampling results from past waste characterization sampling – historical waste characterization sampling may indicate whether future IDW is likely to be a nonhazardous waste or if it may have characteristics of a hazardous waste. • Sampling results from past soil and groundwater samples – historical sampling results from soil and groundwater sampling may indicate whether future IDW is likely to be a nonhazardous waste or if it may have characteristics of a hazardous waste. MSFC-027 CMI Plan Section 4.0		
In determining whether to manage IDW as nonhazardous or hazardous, factors such as generator knowledge and real-time field measurements or observations will be considered. Records supporting the use of generator knowledge will be available for review at the CB&I field office (Building 7471). MSFC-027 CMI Plan Section 4.0		
IDW will be containerized, labeled, and stored in accordance with AAC 335-14 as applicable and as described in the Alabama Environmental Investigation and Remediation Guidance (ADEM, 2005). IDW PPE will be disposed as normal household trash in the dumpster at Building 7471; contaminated PPE will be disposed of with the contaminated waste stream (i.e., PPE generated during soil excavation will be disposed of at the Subtitle D landfill). Other types of IDW, if generated, will be managed in accordance with Table 2 of Appendix G of ADEM (2005). MSFC-027 CMI Plan Section 4.0		
IDW considered nonhazardous using generator knowledge and field observations, soil cuttings and liquid waste will be containerized and stored on site pending sampling and analysis. Analytical testing and subsequent evaluations will be performed to determine if soil can be left on site or if disposal at a Subtitle D landfill is needed. Sampling and analysis of IDW are specified in Appendix E. MSFC-027 CMI Plan Section 4.0		
Any soil IDW determined to be hazardous will be managed and disposed in accordance with SOPP No. 4.0, *Investigation Derived Waste, Rev 2*. IDW believed to be hazardous will be containerized in 55-gallon drums or other suitable containers with tight-fitting lids or covers. These drums/containers will be labeled, moved to a satellite accumulation area or 90-day storage within 72 hours. MSFC-027 CMI Plan Section 4.0		

Location: Redstone Arsenal, Madison County, Alabama

Inspection Type: Field Inspection Checklist
Subject: MSFC-027 CMI Work Plan

Descriptor / Requirements	Comments	Results
A RCRA hazardous waste determination will be made using waste identification criteria described in AAC R. 335-14-2-.01 through AAC R. 335-14-2-.04. Types of analyses are site-specific, but include toxicity characteristic leaching procedure (TCLP) VOCs, TCLP SVOCs, and TCLP metals. Waste where TCLP results exceed limits specified at AAC 335-14-2-.03, Table 1, will be managed as hazardous waste and sent offsite for treatment and disposal in accordance with Federal and State regulations. MSFC-027 CMI Plan Section 4.0		
PCBs concentrations less than 50 mg/kg are not regulated under the Toxic Substances Control Act (TSCA). Consequently PCB-contaminated soil will be managed as a nonhazardous waste until deemed otherwise by waste characterization sampling MSFC-027 CMI Plan Section 4.0		
Nonhazardous soil IDW disposal practices include placing the waste at the site or disposal at a Subtitle D landfill. Nonhazardous water IDW may be processed through RSA's sewage treatment plant or through an appropriate RCRA-permitted facility. MSFC-027 CMI Plan Section 4.0		
Hazardous soil IDW disposal includes disposal in a landfill certified to accept the waste. Hazardous water IDW disposal includes treatment in a facility that meets the definition of a wastewater treatment unit as described in AAC R.335-14-1-.02. MSFC-027 CMI Plan Section 4.0		
4.6 Waste Characterization Sampling		
Contaminated soils will be stockpiled during the excavation at MSFC-027. Grab samples will be randomly retrieved from five points within each of the decision units and composited. Each of these composites representing 200 cubic yards (maximum) will be tested for arsenic, pesticides, and PCBs. MSFC-027 CMI Work Plan Chapter 4.0		
Since PCB concentrations are expected to be much less than 50 mg/kg, the waste is not expected to be regulated by the Toxic Substances Control Act. MSFC-027 CMI Work Plan Chapter 4.0		
If the TCLP arsenic concentrations are below 5 mg/L, the soil may be shipped as nonhazardous waste. A stabilization agent will be mixed with excavated soil if TCLP arsenic concentrations exceed 5 mg/L and an additional composite sample will be collected for analysis. MSFC-027 CMI Work Plan Chapter 4.0		
The waste characterization sample results will be compared to the regulatory levels for TCLP arsenic. Soils are not expected to be characteristically hazardous. It is expected that following stabilization, the excavated soils at MSFC-027 will be managed as a nonhazardous special waste and disposed in a Subtitle D landfill. MSFC-027 CMI Work Plan Chapter 4.0		
PCBs concentrations less than 50 mg/kg are not regulated under TSCA. Consequently PCB-contaminated soil will be managed as a nonhazardous waste until deemed otherwise by waste characterization sampling MSFC-027 CMI Plan Section 4.0		

Location: Redstone Arsenal, Madison County, Alabama

Inspection Type: Field Inspection Checklist
Subject: MSFC-027 CMI Work Plan

Descriptor / Requirements	Comments	Results
The waste characterization results will be submitted to ADEM for approval and an ADEM waste certification number will be obtained prior to disposal of the excavated soils. MSFC-027 CMI Work Plan Chapter 4.0		
4.7 Waste Soil Transportation and Disposal		
CB&I will use a licensed transportation and disposal subcontractor to complete these activities. It is assumed that the arsenic-contaminated soil will be disposed as special waste (nonhazardous) at a Subtitle D landfill. Transportation and disposal of the excavated waste will begin after approval by ADEM and the selected waste disposal facility. A RSA representative will review and sign the waste manifest. MSFC-027 CMI Work Plan Chapter 4.0		
CB&I will document the quantities of waste loaded onto the dump trucks and facilitate the Bill of Lading or shipping paper documentation for the non-hazardous waste shipments. Transportation will comply with all U.S. Department of Transportation regulations. MSFC-027 CMI Work Plan Chapter 4.0		
CB&I will coordinate with the transporters so that the waste will be shipped to arrive on schedule at the landfill. CB&I will receive written approval from the landfill (and ADEM) prior to shipping waste to their facility. The landfill will provide CB&I with a certificate of disposal for each load received and processed. MSFC-027 CMI Work Plan Chapter 4.0		
4.8 Post-Excavation Activities		
The following sections describe the post-excavation activities. MSFC-027 CMI Work Plan Chapter 4.0		
4.8.1 Backfilling and Site Restoration		
CB&I will obtain approximately 5,000 loose cubic yards of fill material from an RSA Borrow Area or another approved off-site borrow source or equivalent. MSFC-027 CMI Work Plan Chapter 4.0		
If sampling of the on-site borrow source material has not been conducted, CB&I will sample the material to confirm it is acceptable for use as backfill at the sites. The borrow material sampling, will include one 5-point composite sample analyzed for TCL SVOCs, TCL pesticides/PCBs, and TAL metals and one sample analyzed for TCL VOCs. MSFC-027 CMI Work Plan Chapter 4.0		
The fill material will be dumped near each excavation area using a dump truck and placed and compacted in each excavation using the excavator. MSFC-027 CMI Work Plan Chapter 4.0		
Once the areas have been backfilled and compacted, clean top soil will be placed over the affected areas. The disturbed areas will be reseeded and mulched per Appendix F. MSFC-027 CMI Work Plan Chapter 4.0		

Location: Redstone Arsenal, Madison County, Alabama

Inspection Type: Field Inspection Checklist
Subject: MSFC-027 CMI Work Plan

Descriptor / Requirements	Comments	Results
A site inspection will be conducted two to four weeks after the seeding to confirm the revegetation is successful. Temporary fencing, sheeting, hay bales, stakes, and other project-related items will be removed from the site and disposed in accordance with SOPP 4.0, *Investigation-Derived Waste* (Shaw, 2010b). MSFC-027 CMI Work Plan Chapter 4.0		
4.8.2 Equipment Decontamination		
Non-disposable sampling equipment will be decontaminated prior to beginning work at the site and prior to the collection of individual samples. All sampling equipment and heavy equipment will be decontaminated in accordance with SOPP 3.0, *Field Equipment Decontamination*. MSFC-027 CMI Work Plan Chapter 4.0		
4.8.3 Temporary Storm Water Erosion and Sediment Control Removal		
Upon completion of site restoration activities, temporary storm water erosion and sediment controls will be removed and disposed off site at the RSA construction debris (C&D) landfill. The silt fence will remain in place until after the vegetation is established. MSFC-027 CMI Work Plan Chapter 4.0		
Once the silt fence is removed, the posts will be pulled from the ground and the remaining disturbed area will be reseeded in accordance with the best management practices in Appendix G. The removed silt fence will also be disposed off site at the RSA C&D landfill. MSFC-027 CMI Work Plan Chapter 4.0		
4.8.4 Demobilization		
Personnel, equipment, and subcontractors will be demobilized from the project site after completion of remedial activities. A small crew and minimal equipment will be retained as required to remove surplus materials and clean staging areas. MSFC-027 CMI Work Plan Chapter 4.0		
Demobilization will primarily consist of disassembly, packing, and return of rented equipment to suppliers and travel for personnel back to their home. MSFC-027 CMI Work Plan Chapter 4.0		
4.9 Inspections for Field Activities		
Inspections will be performed using the three-phase inspection method. Inspections may be performed using visual observation, measurement of materials or equipment, examination of documentation and/or certification, evaluation of performance, or testing. MSFC-027 CMI Work Plan Chapter 4.0		

Location: Redstone Arsenal, Madison County, Alabama

Inspection Type: Field Inspection Checklist
Subject: MSFC-027 CMI Work Plan

Descriptor / Requirements	Comments	Results
Preparatory Inspections/Meetings will be conducted to discuss training, procedures, documentation, equipment, and materials required for the task. Preparatory Inspections/Meetings will be performed prior to start-up and will examine training, procedures, equipment and materials, work plans and documents, and overall readiness to perform work. Participants in the Preparatory Inspections/Meetings will include, but are not limited to, the task subcontractor, the project Quality Control Site Manager (QCSM), the regulatory representative, and the project health and safety representative. MSFC-027 CMI Work Plan Chapter 4.0		
Initial Inspections will be conducted when the task is started. Initial Inspections will include an examination of the quality of workmanship and a review of control testing for compliance with contract and work plan requirements. MSFC-027 CMI Work Plan Chapter 4.0		
Follow-Up Inspections will be conducted as the task is ongoing. Follow-Up Inspections will be performed to verify compliance with procedures. They will ensure a continuation of quality and safety standards established during preparatory and initial inspections until completion of each definable work feature. MSFC-027 CMI Work Plan Chapter 4.0		
Final Follow-Up Inspections will be performed to ensure that completed features of work meet contract requirements. Any deficiencies noted during this inspection will be documented and a determination made as to the corrective action(s) necessary to mitigate each deficiency. All significant deficiencies must be corrected prior to turnover. MSFC-027 CMI Work Plan Chapter 4.0		
At a minimum, inspection files will include inspection reports/checklists, inspection responses, any supporting documents as well as applicable comments. MSFC-027 CMI Work Plan Chapter 4.0		
4.10 Corrective Measures Implementation Reporting		
Progress reports are not required, as implementation of the CMI is scheduled for completion within 180 days of starting construction. However, if completion requires greater than 180 days, the Army will submit CMI progress reports in accordance with Section VIII.D.1 of the RCRA permit. MSFC-027 CMI Work Plan Chapter 4.0		

Location: Redstone Arsenal, Madison County, Alabama

Inspection Type: Field Inspection Checklist
Subject: MSFC-027 CMI Work Plan

Descriptor / Requirements	Comments	Results
Upon completion of the approved CMI, a final report will be prepared and submitted to ADEM to satisfy the applicable requirements of the Alabama Environmental Investigation and Remediation Guidance (ADEM, 2005). The final report of corrective measures will be submitted within 90 days of attainment of cleanup levels or goals pursuant to Part VIII.D of Permit # AL7-210-020-742. The final report will include the following: • Description of activities completed. • As-built construction drawings presenting the final limits of soil excavations at each site and the locations of confirmation samples. • Waste manifests indicating the handling of the excavated material that has been shipped off site to an ADEM-approved and certified landfill. • Monitoring data (soil, air, dust, water) collected for any reason during the construction period for the purposes of monitoring potential for human and ecological exposure. • Certification, prepared in accordance with AAC 335-13-8-02 (2)(d) by RSA and a registered professional engineer (State of Alabama), that the corrective measures required by the RCRA permit are complete. • Appendices consisting of site photographs, analytical report, data validation documentation, and waste manifests MSFC-027 CMI Work Plan Chapter 4.0		

Results:
S = Satisfactory
I = Incomplete at the time of audit or surveillance. To be verified at a later date
O = Observation
F = Finding
NA = Not Applicable

Comments:_____

QA Manager:_____ **Date:**_____

APPENDIX E

DATA COLLECTION QUALITY ASSURANCE PLAN

Data Collection Quality Assurance Plan
MSFC-027, Inactive Waste Accumulation Area
Operable Unit 18
U.S. Army Garrison-Redstone
Madison County, Alabama
EPA ID No. AL7 210 020 742

Prepared for:

Mission & Installation Contracting Command
ATTN: MICC Center – FSH
2107 17th Street
Building 4197, Suite 15
Fort Sam Houston, Texas 78234-5015

Prepared by:

CB&I Federal Services, LLC
2410 Cherahala Blvd
Knoxville, Tennessee 37932

Contract Number W91ZLK-09-D-0006
Task Order 014
CB&I Project No. 500382

April 2016

Table of Contents

Page

E1.0 Introduction.....E-1
E1.1 Purpose.....E-1
E1.2 Document Organization.....E-1
E2.0 References.....E-2
E3.0 Uniform Federal Policy Quality Assurance Project Plan Worksheets.....E-3

Attachment

E-1 Soil Sampling, EPA Region 4 Operating Procedures SESDPROC-300-R3

Data Collection Quality Assurance Plan
MSFC-027, Inactive Waste Accumulation Area
Operable Unit 18
U.S. Army Garrison-Redstone
Madison County, Alabama
EPA ID No. AL7 210 020 742

Prepared for:

Mission & Installation Contracting Command
ATTN: MICC Center – FSH
2107 17th Street
Building 4197, Suite 15
Fort Sam Houston, Texas 78234-5015

Prepared by:

CB&I Federal Services, LLC
2410 Cherahala Blvd
Knoxville, Tennessee 37932

Contract Number W91ZLK-09-D-0006
Task Order 014
CB&I Project No. 500382

April 2016

Table of Contents

Page

E1.0 Introduction E1
E1.1 Purpose E1
E1.2 Document Organization E1
E2.0 References E2
E3.0 Uniform Federal Policy Quality Assurance Project Plan Worksheets E3

Attachment

E-1 Soil Sampling, EPA Region 4 Operating Procedures SESDPROC-300-R3

E1.0 Introduction

This Data Collection Quality Assurance Plan (DCQAP) has been developed as a standard document in support of corrective measures implementation (CMI) at MSFC-027. This document provides procedures, guidelines, and practices for the control of equipment, materials, and services anticipated to be used during the field sampling phase of the soil confirmation sampling following the excavations at the site.

E1.1 Purpose

The purpose of this DCQAP is to define the methodology and practices that control the quality of work performed during implementation of the corrective measures at MSFC-027. The objective of this DCQAP is to ensure that the data collected are of sufficient quality to verify that corrective measures have been accomplished. This DCQAP is intended for use in conjunction with the Redstone Arsenal (RSA) installation-wide work plan (IT Corporation, 2002; Shaw Environmental, Inc. [Shaw], 2010) and the installation-wide (IW) quality assurance program plan (QAPP) for the Program Management Contract (Shaw, 2013). The work guidance documents that will govern the quality practices for this task will include the following:

- The CMI work plan and the associated appendices
- The IW QAPP
- The standard operating project procedures (IW QAPP Volume II) (Shaw, 2013).

Data collection will be in accordance with Alabama Department of Environmental Management (ADEM) guidance (ADEM, 2005; 2010a,b).

E1.2 Document Organization

This document has been organized to present the DCQAP in the following format:

- Introduction – Chapter 1.0
- References – Chapter 2.0
- Uniform Federal Policy (UFP) QAPP Worksheets – Chapter 3.0.

Chapter 1.0 provides a brief overview of this DCQAP and introduces the UFP QAPP worksheets. References are included in Chapter 2.0. The worksheets provided in Chapter 3.0 present a description of the proposed work in compliance with the UFP QAPP format. Worksheet No. 2, *Identifying Information*, provides a crosswalk to the IW QAPP, where needed, and summarizes the site-specific worksheets that are included in this plan.

E2.0 References

Alabama Department of Environmental Management (ADEM), 2010a, Memorandum from James L. Bryant, Environmental Services Branch, ***In-situ Sampling for the Purposes of Waste Characterization/Disposal of Soil***, August.

Alabama Department of Environmental Management (ADEM), 2010b, ***General Soil Sample Collection***, July.

Alabama Department of Environmental Management (ADEM), 2005, ***Alabama Environmental Investigation and Remediation Guidance***, September.

IT Corporation, 2002, ***Draft-Final, Revision 2, Installation-Wide Work Plan, Redstone Arsenal, Madison County, Alabama***, June.

Shaw Environmental, Inc. (Shaw), 2013, ***Revision 2, Installation-Wide Quality Assurance Program Plan for the Program Management Contract, Volume I and Volume II, U.S. Army Garrison-Redstone, Madison County, Alabama***, May.

Shaw Environmental, Inc. (Shaw), 2010, ***Installation-Wide Work Plan, Final Appendices B, C, D, E, F, U.S. Army Garrison-Redstone, Madison County, Alabama***, prepared for U.S. Army Corps of Engineers, Savannah District, Savannah, Georgia, September.

U.S. Department of Defense, 2013, ***Quality Systems Manual for Environmental Laboratories***, Version 5.0, July.

U.S. Environmental Protection Agency (EPA), 1994, ***Region 3 Modifications to the Laboratory Data Validation Functional Guidelines for Evaluating Organic Analyses***, September.

U.S. Environmental Protection Agency (EPA), 1993, ***Region 3 Modifications to the Laboratory Data Validation Functional Guidelines for Evaluating Inorganic Analyses***, April.

E3.0 Uniform Federal Policy Quality Assurance Project Plan Worksheets

The quality assurance requirements needed to support the sampling and data collection activities in this work plan were adopted under the UFP for QAPPs and implemented in a graded approach.

The crosswalk presented in Worksheet No. 2 provides direction to the related documents or information pertaining to the quality assurance project plan requirements. Where site-specific information is required to meet the elements of the UFP QAPP, the supplemental worksheets will be completed in their entirety and included with the crosswalk in this appendix. For the CMI work plan, the supplemental worksheets include the following:

- Worksheet No. 2 – CMI Work Plan Identifying Information
- Worksheet No. 3 – Distribution List
- Worksheet No. 4 – Project Personnel Sign-Off Sheet
- Worksheet No. 14 – Summary of Project Tasks
- Worksheet No. 18 – Sampling Locations, Analytical, and SOPP Requirements
- Worksheet No. 20 – Field Quality Control Sample Summary
- Worksheet No. 26 – Sample Handling System.

The purpose of this DCQAP is to ensure that the data collected are of sufficient quality to achieve the remedial action goals during excavation of contaminated soil at MSFC-027. The objective of the work plan is to present the sampling rationale and provide the details required to complete the field efforts. The work plan is intended for use in conjunction with the IW work plan and the IW QAPP for the Program Management Contract.

Worksheet No. 2 CMI Work Plan Identifying Information

Site Name/Project Name	Redstone Arsenal (RSA), Madison County, Alabama/RSA Program Management Contract (PMC)
Site Location	Groundwater Units RSA-148/149
Site Number/Code	MSFC-027
Operable Unit (OU)	OU-18
Contractor Name	CB&I Federal Services LLC (CB&I)
Contract Number	W91ZLK-09-D-0006
Contract Title	RSA PMC
Work Assignment Number # (Project #)	CB&I Project No. 500382
Guidance Documents (Manuals, Guidelines, Plans, etc. Used to Prepare the DCQAP)	Intergovernmental Data Quality Task Force, 2005, *Uniform Federal Policy for Quality Assurance Project Plans* U.S. Department of Defense (DoD), 2013, *Quality Systems Manual*, Version 5.0
Regulatory Program	Resource Conservation and Recovery Act (RCRA), Alabama Department of Environmental Management (ADEM)
Approval Entities	U.S. Army Garrison - Redstone, ADEM
Work Plan	☒ Corrective Measures Implementation ☐ Generic Field Sampling Plan
Dates of Scoping Sessions	A scoping meeting was held with ADEM and EPA in March 2010. ADEM agreed with the recommendation to proceed with defining the extent of contamination at MSFC-027.
Dates and Titles of SFSP Documents Written for Previous Site Work (if applicable)	References used to prepare the CMI Work Plan are found in Chapter 6.0 of the document.
Organizational Partners (stakeholders) and Their Connection with Lead Organization	U.S. Army Garrison-Redstone – Overseeing CB&I's performance under this PMC point of contact with regulators ADEM – State regulator overseeing RSA environmental and remediation activities
Data Users	CB&I Project/Task Leads, Engineering, support personnel, U.S. Army Garrison-Redstone, ADEM

Worksheet No. 2 CMI Work Plan Identifying Information

Required QAPP Element(s) and Corresponding QAPP Section(s)	Required Information	Crosswalk to Related Worksheet / Documents
Project Management and Objectives		
2.1 Title and Approval Page	Title and Approval Page	Worksheet No. 1 − Title and Approval Page
2.2 Document Format and Table of Contents 2.2.1 Document Control Format 2.2.2 Document Control Numbering System 2.2.3 Table of Contents 2.2.4 QAPP Identifying Information	Table of Contents QAPP Identifying Information	The Table of Contents is provided following the Title and Approval page. Worksheet No. 2 − Identifying Information
2.3 Distribution List and Project Personnel Sign-Off Sheet 2.3.1 Distribution List 2.3.2 Project Personnel Sign-Off Sheet	Distribution List Project Personnel Sign-Off Sheet	Worksheet No. 3 − Distribution List Worksheet No. 4 – Project Personnel Sign-Off Sheet
2.4 Project Organization 2.4.1 Project Organization Chart 2.4.2 Communication Pathways 2.4.3 Personnel Responsibilities and Qualifications 2.4.4 Special Training Requirements and Certification	Project Organization Chart Communication Pathways Personnel Responsibilities and Qualifications Table Special Personnel Training Requirements Table	Worksheet No. 5 − Project Organizational Chart is provided in the IW QAPP, Volume I (Shaw, 2013) Worksheet No. 6 – Worksheet No. 6 in the IW QAPP (Shaw, 2013) Worksheet No. 7 – Personnel Responsibilities and Qualifications Table (Appendix F, Section 2.0) Worksheet No. 8 − Special Personnel Training Requirements Table. There are no special training requirements for this task.
2.5 Project Planning/Problem Definition 2.5.1 Project Planning (Scoping) 2.5.2 Problem Definition, Site History, and Background	Project Planning Session Documentation (including “Data Needs” tables) Project Scoping Session Participants Sheet Problem Definition, Site History, and Background Site Maps (historical and present)	Worksheet No. 9 – Project Scoping Sessions Participants Sheet – A scoping session was held with ADEM and EPA on March 8, 2010. ADEM agreed with the recommendation to proceed with defining the extent of contamination at MSFC-027. A data sufficiency call was held in April 2014 followed by submittal of the Revision 1 RFI in June 2014. Worksheet No. 10 − Problem Definition See Chapter 2.0 of the CMI Work Plan

Worksheet No. 2 CMI Work Plan Identifying Information

Required QAPP Element(s) and Corresponding QAPP Section(s)	Required Information	Crosswalk to Related Worksheet / Documents
2.6 Project Quality Objectives and Measurement Performance Criteria 2.6.1 Development of Project Quality Objectives Using the Systematic Planning Process 2.6.2 Measurement Performance Criteria	Site-Specific Project Quality Objectives Measurement Performance Criteria Table	Worksheet No. 11 − Project Quality Objectives/Systematic Planning Process Statements - Sample and data collection for this activity are not of investigative nature but are for confirmation analysis and waste characterization. Worksheet No. 12 − Measurement Performance Criteria Tables are presented in the IW QAPP, Volume I, Attachment 2a (Shaw, 2013). Site-specific information listing the analyses to be performed is presented in Worksheet No. 18, Sampling Locations, Analytical, and SOPP Requirements, and Worksheet No. 20, Field Quality Control Sample Summary.
2.7 Secondary Data Evaluation	Sources of Secondary Data and Information Secondary Data Criteria and Limitations Table	Worksheet No. 13 − Secondary Data was evaluated during the risk assessment. Sample and data collection for this activity are for confirmation analysis and waste characterization.
2.8 Project Overview and Schedule 2.8.1 Project Overview 2.8.2 Project Schedule	Summary of Project Tasks Reference Limits and Evaluation Table Project Schedule/Timeline Table	Worksheet No. 14 − Summary of Project Tasks. A summary of project tasks is provided in Chapter 4.0. Worksheet No. 15 − Reference Limits and Evaluation Table is presented in the IW QAPP Volume I (Shaw, 2013), Attachment 2a. Site-specific information listing the analyses to be performed is presented in Worksheet No. 18, Sampling Locations, Analytical, and SOPP Requirements, and Worksheet No. 20, Field Quality Control Sample Summary. Worksheet No. 16 − Project Schedule/Timeline Table The construction schedules are found in Appendix C and are based on the regulatory requirements.

Worksheet No. 2 CMI Work Plan Identifying Information

Required QAPP Element(s) and Corresponding QAPP Section(s)	Required Information	Crosswalk to Related Worksheet / Documents
Measurement/Data Acquisition		
3.1 Sampling Tasks 3.1.1 Sampling Process Design and Rationale 3.1.2 Sampling Procedures and Requirements 3.1.2.1 Sampling Collection Procedures 3.1.2.2 Sample Containers, Volume, and Preservation 3.1.2.3 Equipment/Sample Containers Cleaning and Decontamination Procedures 3.1.2.4 Field Equipment Calibration, Maintenance, Testing, and Inspection Procedures 3.1.2.5 Supply Inspection and Acceptance Procedures 3.1.2.6 Field Documentation Procedures	Sampling Design and Rationale Sample Location Map Sampling Locations and Methods / Standard Operating Procedures (SOP) Requirements Table Analytical Methods/SOP Requirements Table Field QC Sample Summary Table Sampling SOPPs Project Sampling SOPP References Table Field Equipment Calibration, Maintenance, Testing, and Inspection Table	Worksheet No. 17 − Sampling Design and Rationale for the confirmation samples are presented in Section 4.4 of the CMI Work Plan. Worksheet No. 18 − Sampling Locations, Analytical, and SOPP Requirements. Worksheet No. 19 − Analytical SOP Requirements Table (Sample Containers Preservation and Holding Times) are presented in the IW QAPP, Volume I, Attachment 2a (Shaw, 2013). Site-specific information listing the analyses to be performed is presented in Worksheet No. 18, Sampling Locations and Analytical Requirements Table, and Worksheet No. 20, Field Quality Control Sample Summary. Worksheet No. 20 – Field Quality Control Sample Summary. Worksheet No. 21 − Project Sampling SOPP Reference Table. There are no project specific SOPPs. The complete list of SOPPs are provided in Worksheet No. 21, Project Sampling SOPP References, in the IW QAPP, Volume I (Shaw, 2013). Additionally, copies of the field sampling SOPPs are provided in the IW QAPP, Volume II (Shaw, 2013). Worksheet No. 22 − Field Equipment Calibration Maintenance, Testing, and Inspection Table This Table is presented in Worksheet No. 22 of the IW QAPP, Volume I (Shaw, 2013).

Worksheet No. 2 CMI Work Plan Identifying Information

Required QAPP Element(s) and Corresponding QAPP Section(s)	Required Information	Crosswalk to Related Worksheet / Documents
3.2 Analytical Tasks 3.2.1 Analytical SOPs 3.2.2 Analytical Instrument Calibration Procedures 3.2.3 Analytical Instrument and Equipment Maintenance, Testing, and Inspection Procedures 3.2.4 Analytical Supply Inspection and Acceptance Procedures	Analytical SOPs Analytical SOP References Table Analytical Instrument Calibration Table Analytical Instrument and Equipment Maintenance, Testing, and Inspection Table	Worksheet No. 23 − Analytical Reference Table – Laboratory are provided in the IW QAPP, Volume I, Attachment 2a (Shaw, 2013). Site-specific information listing the analyses to be performed is presented in Worksheet No. 18, Sampling Locations, Analytical, and SOPP Requirements, and Worksheet No. 20, Field Quality Control Sample Summary. Worksheet No. 24 − Analytical Instrument Calibration Table – Laboratory are provided in the IW QAPP, Volume I, Attachment 2a (Shaw, 2013). Site-specific information listing the analyses to be performed is presented in Worksheet No. 18, Sampling Locations and Analytical Requirements Table, and Worksheet No. 20, Field Quality Control Sample Summary. Worksheet No. 25 − Analytical Instrument and Equipment Maintenance, Testing, and Inspection are provided in the IW QAPP, Volume I, Attachment 2a (Shaw, 2013).
3.3 Sample Collection Documentation, Handling, Tracking, and Custody Procedures 3.3.1 Sample Collection Documentation 3.3.2 Sample Handling and Tracking System 3.3.3 Sample Custody	Sample Collection Documentation Handling, Tracking, and Custody SOPs Sample Container Identification Example Chain-of-Custody (COC) Form and Seal	Worksheet No. 26 − Sample Handling System. Worksheet No. 27 − Sample Custody Requirements are provided in the IW QAPP, Volume I (Shaw, 2013). A sample Chain-of-Custody Form is provided in the IW QAPP Volume I (Shaw, 2013).
3.4 Quality Control (QC) Samples 3.4.1 Sampling Quality Control Samples 3.4.2 Analytical Quality Control Samples	QC Samples Table Screening/Confirmatory Analysis Decision Tree	Worksheet No. 28 – Laboratory QC Sample Tables are presented in their entirety in the IW QAPP Volume I Attachment 2a (Shaw 2013).

Worksheet No. 2 CMI Work Plan Identifying Information

Required QAPP Element(s) and Corresponding QAPP Section(s)	Required Information	Crosswalk to Related Worksheet / Documents
3.5 Data Management Tasks 3.5.1 Project Documentation and Records 3.5.2 Data Package Deliverables 3.5.3 Data Reporting Formats 3.5.4 Data Handling and Management 3.5.5 Data Tracking and Control	Project Documents and Records Table Analytical Services Table Data Management SOPs	Worksheet No. 29 − Project Documents and Records Table (SOPP RSA-11.0, "Field-Generated Records Management" provides additional guidance—included in the IW QAPP Volume II (Shaw, 2013). Worksheet No. 30 − Analytical Services Table is presented in its entirety in the IW QAPP Volume I Attachment 2a (Shaw, 2013).
Assessment/Oversight		
4.1 Assessments and Response Actions 4.1.1 Planned Assessments 4.1.2 Assessment Findings and Corrective Action Responses	Assessments and Response Actions Planned Project Assessments Table Audit Checklists Assessment Findings and Corrective Action Responses Table	Worksheet No. 31 − Planned Project Assessments Table, Constructions specific assessment and inspection are provided in Appendix F. Worksheet No. 32 − Assessment Findings and Corrective Action Responses. CB&I SOPs for quality assessments and reporting are listed in Worksheet No. 21, and a copy is provided in the IW QAPP Volume II (Shaw, 2013). The laboratory audit checklists and assessments are provided in the IW QAPP Volume I (Shaw, 2013).
4.2 QA Management Reports	QA Management Reports Table	Worksheet No. 33 − QA Management Reports Table CB&I SOPs for quality assessment and reporting are provided in the IW QAPP Volume II (Shaw, 2013).
4.3 Final Project Report	All QA Management Reports attached Additional data quality concerns and resolution documentation	Worksheet No. 33 − QA Management Reports Table CB&I SOPs for quality assessment and reporting are provided in the IW QAPP Volume II (Shaw, 2013).

Worksheet No. 2 CMI Work Plan Identifying Information

Required QAPP Element(s) and Corresponding QAPP Section(s)	Required Information	Crosswalk to Related Worksheet / Documents
Data Review		
5.1 Overview		
5.2 Data Review Steps 5.2.1 Step I: Verification 5.2.2 Step II: Validation 5.2.2.1 Step IIa Validation Activities 5.2.2.2 Step IIb Validation Activities 5.2.3 Step III: Usability Assessment 5.2.3.1 Data Limitations and Actions from Usability Assessment 5.2.3.2 Activities	Verification (Step I) Process Table Validation (Steps IIa and IIb) Process Table Validation (Steps IIa and IIb) Summary Table Usability Assessment	Worksheet No. 34 − Verification (Step I) Process Table is presented in the IW QAPP, Volume I (Shaw, 2013). Worksheet No. 35 − Validation (Steps IIa and IIb) Process Table is presented in the IW QAPP Volume I (Shaw, 2013). Worksheet No. 36 − Validation (Steps IIa and IIb) Summary Table is presented in the IW QAPP, Volume I, Attachment 2a (Shaw, 2013). Worksheet No. 37 − Usability Assessment is presented in the IW QAPP, Volume I (Shaw, 2013).
5.3 Streamlining Data Review 5.3.1 Data Review Steps To Be Streamlined 5.3.2 Criteria for Streamlining Data Review 5.3.3 Amounts and Types of Data Appropriate for Streamlining	Automated Data Review A1 and A2 data files for each sample delivery group (SDG) Verification sampling or as needed Applicable to 90 percent data that are not manually validated	Automated Data Review (Laboratory Data Consultants) is used by the laboratory and CB&I to automatically review electronic data against the QAPP requirements. In addition, Empirical Laboratories uses the Element Data System (Promium, LLC) ,which is set up with all project requirements and allows real time data evaluation for compliance with calibration, spike, surrogate, and blank requirements.

Shaw Environmental, Inc. (Shaw), 2013, ***Revision 2, Installation-Wide Quality Assurance Program Plan for the Program Management Contract, Volumes I and II***, ***U.S. Army Garrison-Redstone, Madison County, Alabama***, May.

Worksheet No. 3 Distribution List

SFSP Recipients	Title	Organization	Telephone Number	Fax Number	E-mail Address
Derek Pommerenck	Contracting Officer Representative	U.S. Army Garrison - Redstone	256-842-5987	256-876-0887	Derek.a.pommerenck.civ@mail.mil
Terry de la Paz	Chief Installation Restoration Branch	U.S. Army Garrison - Redstone	256-955-6968	256-876-0887	terry.m.delapaz.civ@mail.mil
Kajuana D. Rice	Army Site Task Manager	U.S. Army Garrison - Redstone	256-313-0368	256-876-0887	kajuana.d.rice.ctr@mail.mil
Phillip Stroud	Lead Remedial Project Manager	ADEM	334-270-5646	334-279-3051	pns@adem.state.al.us
John Nenni	CB&I Task Order 0014 PM	CB&I	256-213-2192	256-213-2190	john.nenni@cbifederalservices.com
Emily Davis	Program Senior Scientist	CB&I	717-737-1049	717-763-0553	emily.davis@cbifederalservices.com
David W. Marcum	CB&I Project QA/QC Manager	CB&I	256-213-2193	256-213-2190	dave.marcum@cbifederalservices.com
Carleton Edmunds	CB&I Regulatory Specialist	CB&I	865-560-5275	865-560-7956	carleton.edmunds@cbifederalservices.com
Brian Rhodes	CB&I Quality Control Site Manager	CB&I	256-213-2202	256-213-2190	brian.rhodes@cbifederalservices.com
Vicki Graves	Program Chemist	CB&I	865-560-7818	865-560-7956	vicki.graves@cbifederalservices.com
Allen Bradley	Group 5 Cost Account Manager	CB&I	865-560-7793	865-560-7956	allen.bradley@cbifederalservices.com
Dennis Seymore	Group 5 Technical Manager	CB&I	865-560-7923	865-560-7956	dennis.seymore@cbifederalservices.com
Ray Clark	Task-Specific Author	CB&I	865-560-7799	865-560-7956	ray.clark@cbifederalservices.com

Notes:
Copies of this CMIP Data Collection Quality Assurance Plan will be distributed to the individuals above.
The addresses for the personnel identified on this list can be found on the following link:
https://xnet.cbifederalservices.com/sites/redstone/Lists/Document%20Submission%20Requirements%20and%20Distribution/Allitemsg.aspx

One controlled hard copy of the IW work plan will be maintained in the field trailer as a reference for field workers. The field team members are required to be familiar with their applicable contents through required reading and the sign-off acknowledgement sheet. The CB&I Quality Control Site Manager will be the owner of the field copy of the IW work plan and will be responsible to ensure that it is current and that all field sampling personnel have read the work controlling documents and have signed the acknowledgement form. A copy of the IW guidance document will be maintained as a reference document in the possession of the field sampling team during the sampling event.

Worksheet No. 4 Project Personnel Sign-Off Sheet

Project Personnel	Title	Telephone Number	Signature	Date CMIP Read
John Nenni	CB&I Task Order 0014 PM	256-213-2192		
Vicki Graves	CB&I Program Chemist	865-560-7818		
Emily Davis	CB&I Sr. Scientist	717-737-1049		
David W. Marcum	CB&I Project QA/QC Manager	256-213-2193		
Carleton Edmunds	CB&I Program Regulatory/Waste Specialist	865-560-5275		
Allen Bradley	Group 5 Cost Account Manager	865-560-7793		
Dennis Seymore	Group 5 Technical Manager	865-560-7923		
Ray Clark	Task-Specific Author	865-560-7799		
Field Personnel	CB&I Field Personnel	256-213-2200		

The individuals who sign above are certifying they have read the applicable sections of the RSA IW QAPP and the SFSP. Upon completion, please forward the original signed form, with all columns completed, to CB&I Federal Services LLC, c/o David W. Marcum, 7471 Maple Road, Huntsville, AL 35898 or forward an electronic version via email to dave.marcum@cbifederalservices.com for the project files.

Worksheet No. 14 Summary of Project Tasks

The data collection activities conducted at MSFC-027 will be completed in accordance with the standard operating project procedures (SOPP), the Corrective Measures Implementation (CMI) work plan, and the installation-wide (IW) quality assurance program plan (QAPP) for the Program Management Contract (Shaw Environmental & Infrastructure, Inc. [Shaw], 2013). Data collection for this CMI will be conducted for the following activities:

- Pre-excavation soil sampling for the remedial design
- Soil confirmation sampling following the soil excavation
- Borrow source sampling prior to placement in the excavation
- Investigation-derived waste (IDW)/remediation-derived waste (RDW) characterization.

Quality assurance/quality control (QC) samples will be collected as presented in Worksheet No. 20, *Field Quality Control Sample Summary.*

The following sections present a brief description of each data collection task and present the work controlling documents that provide guidance for proper data collection implementation. All data collection activities will be conducted in a manner that ensures the quality of the data is sufficient to meet the objectives identified in the CMI work plan.

14.1 Pre-Excavation Design Optimization Soil Sampling

Prior to excavation, soil samples will be collected from the former deep borings within the MSFC-027 excavation areas to confirm that the soil contaminant concentrations in deep soils do not exceed specified cleanup goals for arsenic and are not naturally occurring. Deep soil sampling will also be performed to refine the limits of deep soil excavation. The sampling activities will include soil sampling at the depths and location of the following former boring locations: MSFC-027-SB022 (16 to 18 feet below ground surface [bgs]), -SB023 (16 to 18 feet bgs), -SB024 (6 to 8 feet bgs), -SB026 (10 to 12 and 16 to 18 feet bgs), and -SB028 (22 to 24 feet bgs).

The pre-excavation samples will be collected as composite samples for target analyte list metals analysis. The soil sampling will be conducted in accordance with SOPP No. 5.0, *Surface Soil Sampling*, and SOPP No. 6.0, *Subsurface Soil Sampling* (Shaw, 2013). The soil samples will be field screened using a photoionization detector for health and safety purposes in accordance with SOPP 2.0, *Collection and Field Screening of Soil Samples* (Shaw, 2013). The data collection and analytical program are presented in Worksheets No. 18 and No. 20 of this data collection quality assurance plan (DCQAP), respectively.

Worksheets No. 18 and No. 20 in this DCQAP specify the required sampling and analytical suite.

Worksheet No. 14 Summary of Project Tasks

14.2 Soil Confirmation Samples

Following completion of the soil excavations, confirmation soil samples will be collected within the MSFC-027 excavation areas to ensure that the soil contaminant concentrations remaining at the site do not exceed specified cleanup goals for arsenic, pesticides, or polychlorinated biphenyls. The sampling activities will include soil sampling along the perimeter sidewalls and floors in all excavation areas. The confirmation samples will be collected as composite samples for target analyte list metals, pesticides, and polychlorinated biphenyls. The soil sampling will be conducted in accordance with SOPP No. 5.0, Surface *Soil Sampling*, and SOPP No. 6.0, *Subsurface Soil Sampling* (Shaw, 2013). The soil samples will be field screened using a photoionization detector for health and safety purposes in accordance with SOPP 2.0, *Collection and Field Screening of Soil Samples* (Shaw, 2013). The data collection and analytical program are presented in Worksheets No. 18 and No. 20 of this DCQAP, respectively.

Contaminated soils that are stockpiled during excavation activities at the site will be divided into individual stockpiles of up to 200-cubic yard volumes and sampled in accordance with Section 4.7 of the CMI work plan. Worksheets No. 18 and No. 20 in this DCQAP specify the required sampling and analytical suite.

14.3 Borrow Source Samples

Clean soil for the fill material will be laboratory tested prior to placement. If sampling of the on-site borrow source material has not been conducted, sampling will be conducted to confirm that it is acceptable for use at the site. Samples will be tested for chemical contamination using the following U.S. Environmental Protection Agency (EPA) methods:

- EPA Method 6010C for metals
- EPA Method 8270D for semivolatile organic compounds
- EPA Method 8260B for volatile organic compounds
- EPA Method 8081B for pesticides
- EPA Method 8082A for polychlorinated biphenyls.

Borrow samples will be collected in accordance with SOPP No. 5.0, *Surface Soil Sampling* (Shaw, 2013) and as detailed in Section 4.8 of the MSFC-027 CMI Work Plan. The sample collection and analytical methods are presented in Section 4.8 of the CMI work plan and Worksheets No. 18 and No. 20 of this DCQAP, respectively.

Worksheet No. 14 Summary of Project Tasks

A borrow source assessment report detailing the results of the laboratory analyses will be issued at least 15 days prior to placement of the soils in the excavations at MSFC-027.

14.4 IDW/RDW

Waste to be managed as RDW will include the contaminated soil stockpiled from the excavation at each site. Soil confirmation sampling will generate IDW. The data collection for the IDW/RDW management and analytical requirements is presented in Section 4.8 of the CMI work plan and Worksheets No. 18 and No. 20 of this DCQAP, respectively.

14.5 Equipment Decontamination

Sampling equipment decontamination will be performed to maintain the integrity of the samples collected (i.e., to ensure that contaminants will not be introduced into samples from location to location). All equipment arriving on site will undergo thorough decontamination prior to leaving the site. All equipment will be decontaminated in accordance with the requirements specified in SOPP No. 3.0, *Field Equipment Decontamination* (Shaw, 2013). All soils and water will be containerized in accordance with SOPP No. 4.0, *Investigative Derived Waste* (Shaw, 2013), and sampled as IDW/RDW.

14.6 Field Documentation

Field personnel are responsible for accurately documenting field activities and maintaining the records in a protective manner, safeguarding against damage or loss until submitted to the Site Supervisor or the project files. All field records are to be accurate, complete, and legible and contain sufficient detail to allow future reconstruction of the recorded event by someone other than the originator. Records may be completed electronically or manually.

Personnel completing records/forms shall observe the following minimum requirements:

- Keep all record entries concise and legible: make all entries in dark blue or black, indelible ink.
- Complete all forms in such a manner as to accurately and thoroughly document the activity.
- Use the military clock (24-hour) when recording time.
- When using a preprinted form, complete each blank or space. Mark “NA” or equivalent in each space that is not applicable to activity.
- Make any corrections or deletions required by drawing a single line throughout the entry and initialing and dating the correction.
- Do not use correction fluid/tape or erasers.

Worksheet No. 29, *Project Documents and Records Table*, in the IW QAPP (Shaw, 2013) provides details on records generation, maintenance, and archival and retrieval methods.

Worksheet No. 14 Summary of Project Tasks

14.7 Quality Assurance/Quality Control Sample Collection

As summarized in Worksheet No. 20, *Field Quality Control Sample Summary,* QC samples collected as part of data collection activities will include equipment rinsate samples, field duplicates, and matrix spike (MS)/matrix spike duplicate (MSD) samples to monitor decontamination procedures, sample handling procedures, laboratory precision, accuracy, and sample matrix effects. Laboratory standard operating procedures (SOP) are available in Worksheet No. 19, *Analytical SOP Requirements* (Shaw, 2013).

14.7.1 Equipment Rinsate Samples

Equipment rinsate samples are blank samples collected to determine if the decontamination process has removed residual contamination from sampling equipment. The rinsate sample will consist of ASTM International Type II reagent-grade water poured over or through decontaminated sampling equipment into the appropriate sample containers. The rinsate will be analyzed for the same analytical parameters as the environmental samples. The data obtained from the rinsate samples will be used in the data validation process. Equipment rinsate samples will be collected as needed in accordance with the IW QAPP (Shaw, 2013).

14.7.2 Field Duplicates

Field duplicates will be collected to assess the precision of the analytical process utilized in the analysis of the samples collected. The field duplicates will consist of a second sample collected at the same location as the original sample. The duplicate samples will be collected at predetermined locations and collected, handled, and transported in the same manner as the original samples. One field duplicate will be collected for every 10 regular environmental samples collected. All sampled media will include at least one field duplicate (Shaw, 2013).

14.7.3 Matrix Spike/Matrix Spike Duplicates

MS/MSD samples will be collected to assess the laboratory precision, accuracy, and sample matrix effects. The MS/MSD samples will consist of a second and third sample collected at the same location as the original sample. The samples will be collected at predetermined locations and will be collected, handled, and transported in the same manner as the original samples. One MS/MSD will be collected for every 20 regular environmental samples collected. All sampled media will include at least one MS/MSD (Shaw, 2013).

Worksheet No. 14 Summary of Project Tasks

14.8 Sample Handling Procedures and Holding Times

All sample containers, handling, packaging, and shipping will be in accordance with SOPP No. 15.0, *Non-Hazardous Sample Handling, Packaging and Shipping,* in the IW QAPP (Shaw, 2013). Worksheet No. 20, *Field Quality Control Sample Summary,* provides the sample volume, sample container types, and sample frequency.

14.9 Sample Documentation Custody, Packaging, and Shipping

The field sampling team will maintain physical custody of the samples at all times prior to shipment to the analytical laboratory. Sample documentation custody, packaging, and shipping will be in accordance with SOPP No. 15.0, *Non-Hazardous Sample Handling, and Packaging and Shipping*, in the IW QAPP (Shaw, 2013). Worksheet No. 26, *Sampling Handling System,* identifies the personnel and the organizations that are responsible for sample custody, packaging and shipment.

14.10 Data Management and Validation

All analytical data generated from this project is managed in accordance with the procedures specified in the IW QAPP (Shaw, 2013). Samples collected during implementation of the sampling effort are analyzed using approved EPA SW-846 Update III Methods in accordance with the *U. S. Department of Defense Quality Systems Manual for Environmental Laboratories* (U.S. Department of Defense, 2013) and laboratory SOPs as presented in Worksheet No. 19. Reporting limits for the various analytes are appropriate for comparing data against the decision criteria.

Sample data are validated by the validation team using the U*.S. Department of Defense Quality Systems Manual, Version 5.0* (U.S. Department of Defense, 2013) for guidance. EPA Region 3 *Modifications to the Laboratory Data Validation Functional Guidelines for Evaluating Organic Analyses* (EPA, 1994) and *Modifications to the Laboratory Data Validation Functional Guidelines for Evaluating Inorganic Analyses* (EPA, 1993) are applied during the blank evaluation portion of the validation activities. Specific QC criteria identified in the IW QAPP (Shaw, 2013), analytical methods, and laboratory SOPs will be applied to all sample results. For those analytical methods not addressed by the validation guidelines, the evaluation is based on the published method requirements, laboratory-specific SOPs, and technical judgment following the logic of the Contract Laboratory Program validation guidelines for data qualification.

14.11 Inspections for Field Activities

Inspections are performed on materials or services to determine compliance with contractual, planning, and other requirements. Inspection criteria are established prior to the inspection and based upon project specifications, requirements, code specifications, and product acceptability. Acceptance criteria

Worksheet No. 14 Summary of Project Tasks

shall be adequate for the activity and be verified during inspection activities. Inspection may be performed and verified through visual observation, measurement of materials or equipment, examination of documentation/certification, evaluation of performance, or testing. Worksheet No. 31, *Planned Project Assessments Table* (Shaw, 2013), provides details on the types of inspections as well as the inspection frequency. Records of inspections are maintained in the project files. At minimum, inspection files will include inspection reports/checklists, inspection responses, any supporting documents, as well as applicable client comments.

Worksheet No. 18 Sampling Locations, Analytical, and SOPP Requirements

Sample Location	Sample Designation	Sample Depth (ft bgs)	QA/QC Sample Designation		Analytical Suite
			FD*	MS/MSD*	
MSFC-027 Pre-Excavation Soil Boring Sample Locations					
MSFC-027-SB022A	MSFC-027-SB022A -DS- AAY0214 -REG	16-18'	MSFC-027-SB022A-DS-AAY0215-FD		TAL Metals
MSFC-027-SB023A	MSFC-027-SB023A -DS- AAY0216 -REG	16-18'			TAL Metals
MSFC-027-SB024A	MSFC-027-SB024A -DS- AAY0217 -REG	6-8'		MSFC-027-SB024A-DS-AAY0217-MS/MSD	TAL Metals
MSFC-027-SB026A	MSFC-027-SB026A -DS- AAY0218 -REG	10-12'			TAL Metals
	MSFC-027-SB026A -DS- AAY0219 -REG	16-18'			TAL Metals
MSFC-027-SB028A	MSFC-027-SB028A -DS- AAY0220 -REG	22-24'			TAL Metals
MSFC-027 Contingency Deep Soil Excavation Area SB022B Sample Locations					
MSFC-027-22BW01	MSFC-027-22BW01 -DS- AAY0221 -REG	16-18'	MSFC-027-22BW01-DS-AAY0222-FD		TAL Metals
MSFC-027-22BW02	MSFC-027-22BW02 -DS- AAY0223 -REG	16-18'			TAL Metals
MSFC-027-22BW03	MSFC-027-22BW03 -DS- AAY0224 -REG	16-18'		MSFC-027-22BW03-DS-AAY0224-MS/MSD	TAL Metals
MSFC-027-22BW04	MSFC-027-22BW03 -DS- AAY0225 -REG	16-18'			TAL Metals
MSFC-027 Contingency Deep Soil Excavation Area SB023B Sample Locations					
MSFC-027-23BW01	MSFC-027-23BW01 -DS- AAY0226 -REG	16-18'			TAL Metals
MSFC-027-23BW02	MSFC-027-23BW02 -DS- AAY0227 -REG	16-18'	MSFC-027-23BW02-DS-AAY0228-FD		TAL Metals
MSFC-027-23BW03	MSFC-027-23BW03 -DS- AAY0229 -REG	16-18'		MSFC-027-23BW03-DS-AAY0229-MS/MSD	TAL Metals
MSFC-027-23BW04	MSFC-027-23BW04 -DS- AAY0230 -REG	16-18'			TAL Metals
MSFC-027 Contingency Deep Soil Excavation Area SB024B Sample Locations					
MSFC-027-24BW01	MSFC-027-24BW01 -DS- AAY0240 -REG	6-8'			TAL Metals
MSFC-027-24BW02	MSFC-027-24BW02 -DS- AAY0241 -REG	6-8'	MSFC-027-24BW02-DS-AAY0242-FD		TAL Metals
MSFC-027-24BW03	MSFC-027-24BW03 -DS- AAY0243 -REG	6-8'			TAL Metals
MSFC-027-24BW04	MSFC-027-24BW04 -DS- AAY0244 -REG	6-8'		MSFC-027-24BW04-DS-AAY0244-MS/MSD	TAL Metals
MSFC-027 Contingency Deep Soil Excavation Area SB026B Sample Locations					
MSFC-027-26BW01	MSFC-027-26BW01 -DS- AAY0245 -REG	10-12'	MSFC-027-26BW01-DS-AAY0246-FD		TAL Metals
	MSFC-027-26BW01 -DS- AAY0247 -REG	16-18'			
MSFC-027-26BW02	MSFC-027-26BW02 -DS- AAY0248 -REG	10-12'			TAL Metals
	MSFC-027-26BW02 -DS- AAY0249 -REG	16-18'		MSFC-027-26BW02-DS-AAY0249-MS/MSD	
MSFC-027-26BW03	MSFC-027-26BW03 -DS- AAY0250 -REG	10-12'			TAL Metals
	MSFC-027-26BW03 -DS- AAY0251 -REG	16-18'			
MSFC-027-26BW04	MSFC-027-26BW04 -DS- AAY0252 -REG	10-12'			TAL Metals
	MSFC-027-26BW04 -DS- AAY0253 -REG	16-18'			
MSFC-027 Contingency Deep Soil Excavation Area SB028B Sample Locations					
MSFC-027-28BW01	MSFC-027-28BW01 -DS- AAY0254 -REG	22-24'		MSFC-027-28BW01-DS-AAY0254-MS/MSD	TAL Metals
MSFC-027-28BW02	MSFC-027-28BW02 -DS- AAY0255 -REG	22-24'	MSFC-027-28BW02-DS-AAY0256-FD		TAL Metals
MSFC-027-28BW03	MSFC-027-28BW03 -DS- AAY0257 -REG	22-24'			TAL Metals
MSFC-027-28BW04	MSFC-027-28BW04 -DS- AAY0258 -REG	22-24'			TAL Metals

Worksheet No. 18 Sampling Locations, Analytical, and SOPP Requirements

Sample Location	Sample Designation	Sample Depth (ft bgs)	QA/QC Sample Designation		Analytical Suite
			FD*	MS/MSD*	
MSFC-027 Confirmation SampleSP1 Locations					
MSFC-027-SP1W01	MSFC-027-SP1W01 -SS- AAY0259 -REG	0-1'			TAL Metals, Pesticides, PCBs
MSFC-027-SP1W02	MSFC-027-SP1W02 -SS- AAY0260 -REG	0-1'			
MSFC-027-SP1W03	MSFC-027-SP1W03 -SS- AAY0261 -REG	0-1'	MSFC-027-SP1W03-SS-AAY0262-FD		
MSFC-027-SP1W04	MSFC-027-SP1W04 -SS- AAY0263 -REG	0-1'			
MSFC-027-SP1W05	MSFC-027-SP1W05 -SS- AAY0264 -REG	0-1'			
MSFC-027-SP1W06	MSFC-027-SP1W06 -SS- AAY0265 -REG	0-1'		MSFC-027-SPW06-SS-AAY0265-MS/MSD	
MSFC-027-SP1W07	MSFC-027-SP1W07 -SS- AAY0266 -REG	0-1'			
MSFC-027-SP1F01	MSFC-027-SP1F01 -DS- AAY0267 -REG	1-2'			
MSFC-027-SP1F02	MSFC-027-SP1F02 -DS- AAY0268 -REG	1-2'			
MSFC-027-SP1F03	MSFC-027-SP1F03 -DS- AAY0269 -REG	1-2'			
MSFC-027 Confirmation Sample SP5 Locations					
MSFC-027-SP5W01	MSFC-027-SP5W01 -SS- AAY0270 -REG	0-1'	MSFC-027-SP5W01-SS-AAY0271-FD		TAL Metals, Pesticides, PCBs
MSFC-027-SP5W02	MSFC-027-SP5W02 -SS- AAY0272 -REG	0-1'			
MSFC-027-SP5W03	MSFC-027-SP5W03 -SS- AAY0273 -REG	0-1'			
MSFC-027-SP5W04	MSFC-027-SP5W04 -SS- AAY0274 -REG	0-1'			
MSFC-027-SP5W05	MSFC-027-SP5W05 -SS- AAY0275 -REG	0-1'		MSFC-027-SP5W05-SS-AAY0275-MS/MSD	
MSFC-027-SP5W06	MSFC-027-SP5W06 -SS- AAY0276 -REG	0-1'			
MSFC-027-SP5W07	MSFC-027-SP5W07 -SS- AAY0277 -REG	0-1'			
MSFC-027-SP5W08	MSFC-027-SP5W08 -SS- AAY0278 -REG	0-1'			
MSFC-027-SP5F01	MSFC-027-SP5F01 -DS- AAY0279 -REG	1-2'			
MSFC-027-SP5F02	MSFC-027-SP5F02 -DS- AAY0280 -REG	1-2'			
MSFC-027-SP5F03	MSFC-027-SP5F03 -DS- AAY0281 -REG	1-2'			
MSFC-027 Confirmation Sample SP6 Locations					
MSFC-027-SP6W01	MSFC-027-SP6W01 -SS- AAY0282 -REG	0-1'			TAL Metals, Pesticides, PCBs
MSFC-027-SP6W02	MSFC-027-SP6W02 -SS- AAY0283 -REG	0-1'	MSFC-027-SP6W02-SS-AAY0284-FD		
MSFC-027-SP6W03	MSFC-027-SP6W03 -SS- AAY0285 -REG	0-1'			
MSFC-027-SP6W04	MSFC-027-SP6W04 -SS- AAY0286 -REG	0-1'			
MSFC-027-SP6W05	MSFC-027-SP6W05 -SS- AAY0287 -REG	0-1'			
MSFC-027-SP6F01	MSFC-027-SP6F01 -DS- AAY0288 -REG	1-2'			
MSFC-027-SP6F02	MSFC-027-SP6F02 -DS- AAY0289 -REG	1-2'			
MSFC-027-SP6F03	MSFC-027-SP6F03 -DS- AAY0290 -REG	1-2'			
MSFC-027 Shallow Soil Excavation Sample S002A Locations					
E27-SO02AW01	E27-SO02AW01 -DS- AAY0291 -REG	0-2'	E27-SO02AW01-DS-AAY0292-FD		TAL Metals, Pesticides, PCBs
E27-SO02AW02	E27-SO02AW02 -DS- AAY0293 -REG	0-2'			
E27-SO02AW03	E27-SO02AW03 -DS- AAY0294 -REG	0-2'			
E27-SO02AW04	E27-SO02AW04 -DS- AAY0295 -REG	0-2'			
E27-SO02AF01	E27-SO02AF01 -DS- AAY0296 -REG	2-3'			

Worksheet No. 18 Sampling Locations, Analytical, and SOPP Requirements

Sample Location	Sample Designation	Sample Depth (ft bgs)	QA/QC Sample Designation		Analytical Suite
			FD*	MS/MSD*	
MSFC-027 Shallow Soil Excavation Sample S004A Locations					
E27-SO04AW01	E27-SO04AW01 -DS- AAY0297 -REG	0-3'			TAL Metals, Pesticides, PCBs
E27-SO04AW02	E27-SO04AW02 -DS- AAY0298 -REG	0-3'	E27-SO04AW02-DS-AAY0299-FD		
E27-SO04AW03	E27-SO04AW03 -DS- AAY0300 -REG	0-3'			
E27-SO04AW04	E27-SO04AW04 -DS- AAY0301 -REG	0-3'			
E27-SO04AF01	E27-SO04AF01 -DS- AAY0302 -REG	3-4'			
MSFC-027 Shallow Soil Excavation Sample S005A Locations					
E27-SO05AW01	E27-SO05AW01 -DS- AAY0303 -REG	0-2'			TAL Metals, Pesticides, PCBs
E27-SO05AW02	E27-SO05AW02 -DS- AAY0304 -REG	0-2'		E27-SO05AW02-DS-AAY0304-MS/MSD	
E27-SO05AW03	E27-SO05AW03 -DS- AAY0305 -REG	0-2'			
E27-SO05AW04	E27-SO05AW04 -DS- AAY0306 -REG	0-2'			
E27-SO05AF01	E27-SO05AF01 -DS- AAY0307 -REG	2-3'			
MSFC-027 Shallow Soil Excavation Sample SBA Locations					
M2708-SBAW01	M2708-SBAW01 -DS- AAY0308 -REG	0-2'			TAL Metals, Pesticides, PCBs
M2708-SBAW02	M2708-SBAW02 -DS- AAY0309 -REG	0-2'			
M2708-SBAW03	M2708-SBAW03 -DS- AAY0310 -REG	0-2'			
M2708-SBAW04	M2708-SBAW04 -DS- AAY0311 -REG	0-2'			
M2708-SBAF01	M2708-SBAF01 -DS- AAY0312 -REG	2-3'			
MSFC-027 Shallow Soil Excavation Sample S015A Locations					
E27-SO15AW01	E27-SO15AW01 -DS- AAY0313 -REG	0-2'	E27-SO15AW01-DS-AAY0314-FD		TAL Metals, Pesticides, PCBs
E27-SO15AW02	E27-SO15AW02 -DS- AAY0315 -REG	0-2'			
E27-SO15AW03	E27-SO15AW03 -DS- AAY0316 -REG	0-2'			
E27-SO15AW04	E27-SO15AW04 -DS- AAY0317 -REG	0-2'			
E27-SO15AF01	E27-SO15AF01 -DS- AAY0318 -REG	2-3'			
MSFC-027 Soil Boring Excavation Sample SB04A Locations					
E27-SB04AW01	E27-SB04AW01 -DS- AAY0319 -REG	0-2'			TAL Metals, Pesticides, PCBs
E27-SB04AW02	E27-SB04AW02 -DS- AAY0320 -REG	0-2'			
E27-SB04AW03	E27-SB04AW03 -DS- AAY0321 -REG	0-2'			
E27-SB04AW04	E27-SB04AW04 -DS- AAY0322 -REG	0-2'			
E27-SB04AF01	E27-SB04AF01 -DS- AAY0323 -REG	2-3'			
MSFC-027 Soil Boring Excavation Sample SB06A Locations					
E27-SB06AW01	E27-SB06AW01 -DS- AAY0324 -REG	0-2'	E27-SB06AW01-DS-AAY0325-FD		TAL Metals, Pesticides, PCBs
E27-SB06AW02	E27-SB06AW02 -DS- AAY0326 -REG	0-2'			
E27-SB06AW03	E27-SB06AW03 -DS- AAY0327 -REG	0-2'			
E27-SB06AW04	E27-SB06AW04 -DS- AAY0328 -REG	0-2'			
E27-SB06AF01	E27-SB06AF01 -DS- AAY0329 -REG	2-3'			

Worksheet No. 18 Sampling Locations, Analytical, and SOPP Requirements

Sample Location	Sample Designation	Sample Depth (ft bgs)	QA/QC Sample Designation		Analytical Suite
			FD*	MS/MSD*	
MSFC-027 Soil Boring Excavation Sample SB021A Locations					
MSFC-027-SB021AW01	MSFC-027-SB021AW01 -DS- AAY0330 -REG	0-2'			TAL Metals, Pesticides, PCBs
MSFC-027-SB021AW02	MSFC-027-SB021AW02 -DS- AAY0331 -REG	0-2'		MSFC-027-SB021AW02-DS-AAY0331-MS/MSD	
MSFC-027-SB021AW03	MSFC-027-SB021AW03 -DS- AAY0332 -REG	0-2'			
MSFC-027-SB021AW04	MSFC-027-SB021AW04 -DS- AAY0333 -REG	0-2'			
MSFC-027-SB021AF01	MSFC-027-SB021AF01 -DS- AAY0334 -REG	2-3'			
Borrow Source Samples					
MSFC-027-BORROW1	MSFC-027-SITE -SO- AAY9012 -REG	NA			TCL VOC, TCL SVOC, Pesticides, PCBS, TAL Metals
MSFC-027-BORROW1	MSFC-027-SITE -SO- AAY9013 -REG	NA			TCL VOC, TCL SVOC, Pesticides, PCBS, TAL Metals
Waste Characterization Samples					
MSFC-027-SITE	MSFC-027-SITE -SO- AAY9014 -REG	NA			TCLP Pesticides, TCLP Metals, PCBs
MSFC-027-SITE	MSFC-027-SITE -SO- AAY9015 -REG	NA			TCLP Pesticides, TCLP Metals, PCBs
MSFC-027-SITE	MSFC-027-SITE -SO- AAY9016 -REG	NA			TCLP Pesticides, TCLP Metals, PCBs
MSFC-027-SITE	MSFC-027-SITE -SO- AAY9017 -REG	NA			TCLP Pesticides, TCLP Metals, PCBs
MSFC-027-SITE	MSFC-027-SITE -SO- AAY9018 -REG	NA			TCLP Pesticides, TCLP Metals, PCBs
MSFC-027-SITE	MSFC-027-SITE -SO- AAY9019 -REG	NA			TCLP Pesticides, TCLP Metals, PCBs
MSFC-027-SITE	MSFC-027-SITE -SO- AAY9020 -REG	NA			TCLP Pesticides, TCLP Metals, PCBs
MSFC-027-SITE	MSFC-027-SITE -SO- AAY9021 -REG	NA			TCLP Pesticides, TCLP Metals, PCBs
MSFC-027-SITE	MSFC-027-SITE -SO- AAY9022 -REG	NA			TCLP Pesticides, TCLP Metals, PCBs
MSFC-027-SITE	MSFC-027-SITE -SO- AAY9023 -REG	NA			TCLP Pesticides, TCLP Metals, PCBs
MSFC-027-SITE	MSFC-027-SITE -SO- AAY9024 -REG	NA			TCLP Pesticides, TCLP Metals, PCBs
MSFC-027-SITE	MSFC-027-SITE -SO- AAY9025 -REG	NA			TCLP Pesticides, TCLP Metals, PCBs
MSFC-027-SITE	MSFC-027-SITE -SO- AAY9026 -REG	NA			TCLP Pesticides, TCLP Metals, PCBs
MSFC-027-SITE	MSFC-027-SITE -SO- AAY9027 -REG	NA			TCLP Pesticides, TCLP Metals, PCBs
MSFC-027-SITE	MSFC-027-SITE -SO- AAY9028 -REG	NA			TCLP Pesticides, TCLP Metals, PCBs
MSFC-027-SITE	MSFC-027-SITE -SO- AAY9029 -REG	NA			TCLP Pesticides, TCLP Metals, PCBs
MSFC-027-SITE	MSFC-027-SITE -SO- AAY9030 -REG	NA			TCLP Pesticides, TCLP Metals, PCBs
MSFC-027-SITE	MSFC-027-SITE -SO- AAY9031 -REG	NA			TCLP Pesticides, TCLP Metals, PCBs
MSFC-027-SITE	MSFC-027-SITE -SO- AAY9032 -REG	NA			TCLP Pesticides, TCLP Metals, PCBs
MSFC-027-SITE	MSFC-027-SITE -SO- AAY9033 -REG	NA			TCLP Pesticides, TCLP Metals, PCBs
MSFC-027-SITE	MSFC-027-SITE -SO- AAY9034 -REG	NA			TCLP Pesticides, TCLP Metals, PCBs
MSFC-027-SITE	MSFC-027-SITE -SO- AAY9035 -REG	NA			TCLP Pesticides, TCLP Metals, PCBs

Worksheet No. 18 Sampling Locations, Analytical, and SOPP Requirements

Sample Location	Sample Designation	Sample Depth (ft bgs)	QA/QC Sample Designation		Analytical Suite
			FD*	MS/MSD*	
MSFC-027-SITE	MSFC-027-SITE -SO- AAY9036 -REG	NA			TCLP Pesticides, TCLP Metals, PCBs
MSFC-027-SITE	MSFC-027-SITE -SO- AAY9037 -REG	NA			TCLP Pesticides, TCLP Metals, PCBs
MSFC-027-SITE	MSFC-027-SITE -SO- AAY9038 -REG	NA			TCLP Pesticides, TCLP Metals, PCBs
MSFC-027-SITE	MSFC-027-SITE -SO- AAY9039 -REG	NA			TCLP Pesticides, TCLP Metals, PCBs

*The MS/MSD/FD locations are subject to change due to field conditions. Project chemist will be notified and data base updated accordingly.

REG - Regular sample.
FD - Field duplicate.
IDW - Investigation-derived waste.
MS - Matrix spike.
MSD - Matric spike duplicate.
QA - Quality assurance.
QC - Quality control.
TCLP - Toxicity characteristic leaching procedure.
RSA - Redstone Arsenal.
TAL - Target analyte list.

Worksheet No. 20
Field Quality Control Sample Summary

Parameters	Analytical Method	Matrix	Total Number of Samples	FD	MS	MSD	Equip. Rinsate (1/event)	Trip Blank (1/cooler)	TAT Needed[a]	Sample Container/Preservation Requirements[b]	Holding Time	Total Number of Containers
MSFC-027 Samples												
Pre-Excavation Soil Boring Samples												
TAL Metals	3050B/6010D/7471A	Soil	5	1	1	1	1	0	Normal	4-oz jar	6 months; Mercury - 28 days	9
Contingency Deep Soil Excavation Samples Area SB022B												
TAL Metals	3050B/6010D/7471A	Soil	4	1	1	1	1	0	Normal	4-oz jar	14 days extraction; 40 days analysis	8
Contingency Deep Soil Excavation Samples Area SB023B												
TAL Metals	3050B/6010D/7471A	Soil	4	1	1	1	1	0	Normal	4-oz jar	14 days extraction; 40 days analysis	8
Contingency Deep Soil Excavation Samples Area SB024B												
TAL Metals	3050B/6010D/7471A	Soil	4	1	1	1	1	0	Normal	4-oz jar	14 days extraction; 40 days analysis	8
Contingency Deep Soil Excavation Samples Area SB026B												
TAL Metals	3050B/6010D/7471A	Soil	4	1	1	1	1	0	Normal	4-oz jar	14 days extraction; 40 days analysis	8
Contingency Deep Soil Excavation Samples Area SB028B												
TAL Metals	3050B/6010D/7471A	Soil	4	1	1	1	1	0	Normal	4-oz jar	14 days extraction; 40 days analysis	8
Confirmation Soil Samples												
Pesticides	3540C/8081B	Soil	29	3	2	2	0	0	Normal	4-oz jar	6 months; Mercury - 28 days	36
PCBs	3540C/8082A	Soil	29	3	2	2	0	0	Normal	4-oz jar	14 days extraction; 40 days analysis	36
TAL Metals	3050B/6010D/7471A	Soil	29	3	2	2	0	0	Normal	4-oz jar	14 days extraction; 40 days analysis	36
Shallow Soil Excavation Soil Samples												
Pesticides	3540C/8081B	Soil	32	4	2	2	2	0	Normal	4-oz jar	6 months; Mercury - 28 days	42
PCBs	3540C/8082A	Soil	32	4	2	2	2	0	Normal	4-oz jar	14 days extraction; 40 days analysis	42
TAL Metals	3050B/6010D/7471A	Soil	32	4	2	2	2	0	Normal	4-oz jar	14 days extraction; 40 days analysis	42
Borrow Source Soil Samples												
TCL VOC	5035/8260B	Soil	2	0	0	0	0	0	Normal	3 Terracores in Methanol/sodium bisulfate	14 says	2
TCL SVOC	3540C/8270D	Soil	2	0	0	0	0	0	Normal	4-oz jar	14 days extraction; 40 days analysis	2

Worksheet No. 20
Field Quality Control Sample Summary

Parameters	Analytical Method	Matrix	Total Number of Samples	FD	MS	MSD	Equip. Rinsate (1/event)	Trip Blank (1/cooler)	TAT Needed[a]	Sample Container/Preservation Requirements[b]	Holding Time	Total Number of Containers
Pesticides	3540C/8081B	Soil	2	0	0	0	0	0	Normal	4-oz jar	14 days extraction; 40 days analysis	2
PCBs	3540C/8082A	Soil	2	0	0	0	0	0	Normal	4-oz jar	14 days extraction; 40 days analysis	2
TAL Metals	3050B/6010D/7471A	Soil	2	0	0	0	0	0	Normal	4-oz jar	14 days extraction; 40 days analysis	2
Waste Characterization Samples												
TCLP Pesticides	1311/3510B/8081B	Soil	26	0	0	0	0	0	Normal	4-oz jar	14 days from collection to TCLP; 7 days toextraction; 40 days from extraction to analysis	26
PCBs	3540C/8082A	Soil	26	0	0	0	0	0	Normal	4-oz jar	14 days extraction; 40 days analysis	26
TCLP Metals	1311/3005A/ 6010D/7470A	Soil	26	0	0	0	0	0	Normal	4-oz jar	6 months from collection to extraction/6 months from extraction to analysis; Mercury - 28 days	26

[a] Sample deliverables should include a Level IV, CLP-like data package and EDD for all samples with the exception of IDW samples that require certificates of analysis and EDD only.

[b] All samples should be cooled to 4 degrees Celsius in conjunction with preservation requirements noted prior to shipment to the laboratory.

Worksheet No. 26 Sample Handling System

SAMPLE COLLECTION, PACKAGING, AND SHIPMENT (FIELD)
Sample Collection (Personnel/Organization): Wally Cooper or designee/CB&I
Sample Packaging (Personnel/Organization): Brian Rhodes or designee/CB&I
Coordination of Shipment (Personnel/Organization): Vicki Graves or designee/CB&I
Type of Shipment/Carrier: Cooler/Lab Courier, UPS
SAMPLE RECEIPT AND ANALYSIS
Sample Receipt (Personnel/Organization): Sample Custodians/Empirical Laboratory, LLC
Sample Custody and Storage (Personnel/Organization): Sample Custodians/Empirical Laboratory, LLC
Sample Preparation (Personnel/Organization): Extraction Lab, Metals Preparation Lab/Empirical Laboratory, LLC
Sample Determinative Analysis (Personnel/Organization): GC/Liquid Chromatography Lab, GC/MS Lab, Metals Preparation Lab/Empirical Laboratory, LLC
SAMPLE ARCHIVING
Field Sample Storage (No. of days from sample collection): 60 days from receipt
Sample Extract/Digestate Storage (No. of days from extraction/digestion): 3 months from sample extraction/ digestion
Biological Sample Storage (No. of days from sample collection): NA
SAMPLE DISPOSAL
Personnel/Organization: Sample Custodians/ Empirical Laboratory, LLC
Number of Days from Analysis: 30 days from submittal of final report or 60 days from receipt, whichever is longer

Post sample collection in the field will be conducted in accordance with SOPP 15.0 *Non-Hazardous Sample Handling, Packaging, and Shipping.* This procedure is located in the RSA IW QAPP, Volume II (Shaw, 2013).

Specific laboratory sample custody procedures (receipt of samples, archiving, and disposal) will be used for all post-sample handling. Coolers will be received and checked for proper temperature. A sample cooler receipt form will be filled out to note the conditions and any discrepancies. The chain of custody will be checked against the sample containers for correctness. Samples will be logged into the data base and given a unique log number, which can be tracked through processing. The Project Chemist will be notified of any problems.

ATTACHMENT E-1

SOIL SAMPLING
EPA Region 4 Operating Procedure
(SESDPROC-300.R3)

Region 4
U.S. Environmental Protection Agency
Science and Ecosystem Support Division
Athens, Georgia

OPERATING PROCEDURE

Title: **Soil Sampling**

Effective Date: August 21, 2014	**Number:** SESDPROC-300-R3

Authors

Name: Kevin Simmons
Title: Environmental Scientist, Regional Expert
Signature: Date: 8/18/2014

Approvals

Name: John Deatrick
Title: Acting Chief, Enforcement and Investigations Branch
Signature: Date: 8/18/14

Name: Bobby Lewis
Title: Field Quality Manager, Science and Ecosystem Support Division
Signature: for Bobby Lewis Date: 8/20/14

Revision History

The top row of this table shows the most recent changes to this controlled document. For previous revision history information, archived versions of this document are maintained by the SESD Document Control Coordinator on the SESD local area network (LAN).

History	Effective Date
SESDPROC-300-R3, *Soil Sampling*, replaces SESDPROC-300-R2. **General:** Corrected any typographical, grammatical and/or editorial errors. **Title Page:** Updated the author from Fred Sloan to Kevin Simmons. Updated the Enforcement and Investigations Branch Chief from Archie Lee to Acting Chief, John Deatrick. Section 1.5.1: Added "The reader should" to last sentence of the paragraph. Section 1.5.2: Omitted "When sampling in landscaped areas," from first sentence of eighth bullet. Section 3.2.4: In the first paragraph, first sentence, added "(rapidly form bubbles)." Omitted "(rapidly form bubbles)" from second paragraph, second sentence. Any reference to "Percent Moisture and Preservation Compatibility (MOICA)" or "Percent Moisture" was changed to "Percent Solids", both in the text and in Table 1.	August 21, 2014
SESDPROC-300-R2, *Soil Sampling*, replaces SESDPROC-300-R1.	December 20, 2011
SESDPROC-300-R1, *Soil Sampling*, replaces SESDPROC-300-R0.	November 1, 2007
SESDPROC-300-R0, Soil Sampling, Original Issue	February 05, 2007

TABLE OF CONTENTS

1 General Information 5
1.1 Purpose 5
1.2 Scope/Application 5
1.3 Documentation/Verification 5
1.4 References 5
1.5 General Precautions 6
1.5.1 Safety 6
1.5.2 Procedural Precautions 6
2 Special Sampling Considerations 8
2.1 Special Precautions for Trace Contaminant Soil Sampling 8
2.2 Sample Homogenization 8
2.3 Dressing Soil Surfaces 9
2.4 Quality Control 9
2.5 Records 9
3 Method 5035 10
3.1 Soil Samples for Volatile Organic Compounds (VOC) Analysis 10
3.2 Soil Sampling (Method 5035) 10
3.2.1 Equipment 10
3.2.2 Sampling Methodology - Low Concentrations (<200 µg/kg) 10
3.2.3 Sampling Methodology - High Concentrations (>200 µg/kg) 11
3.2.4 Special Techniques and Considerations for Method 5035 12
4 Manual Soil Sampling Methods 15
4.1 General 15
4.2 Spoons 15
4.2.1 Special Considerations When Using Spoons 15
4.3 Hand Augers 15
4.3.1 Surface Soil Sampling 16
4.3.2 Subsurface Soil Sampling 16
4.3.3 Special Considerations for Soil Sampling with the Hand Auger 16
5 Direct Push Soil Sampling Methods 17
5.1 General 17
5.2 Large Bore® Soil Sampler 17
5.3 Macro-Core® Soil Sampler 17
5.4 Dual Tube Soil Sampling System 18
5.5 Special Considerations When Using Direct Push Sampling Methods 18
6 Split Spoon/Drill Rig Methods 20
6.1 General 20
6.2 Standard Split Spoon 20
6.3 Continuous Split Spoon 20
6.4 Special Considerations When Using Split Spoon Sampling Methods 21
7 Shelby Tube/Thin-Walled Sampling Methods 22
7.1 General 22

7.2 Shelby Tube Sampling Method 22
7.3 Special Considerations When Using Split Spoon Sampling Methods 22
8 Backhoe Sampling Method **23**
8.1 General 23
8.2 Scoop-and-Bracket Method 23
8.3 Direct-from-Bucket Method 23
8.4 Special Considerations When Sampling with a Backhoe 23

TABLES

Table 1: Method 5035 Summary **14**

1 General Information

1.1 Purpose

This document describes general and specific procedures, methods and considerations to be used and observed when collecting soil samples for field screening or laboratory analysis.

1.2 Scope/Application

The procedures contained in this document are to be used by field personnel when collecting and handling soil samples in the field. On the occasion that SESD field personnel determine that any of the procedures described in this section are inappropriate, inadequate or impractical and that another procedure must be used to obtain a soil sample, the variant procedure will be documented in the field logbook and subsequent investigation report, along with a description of the circumstances requiring its use. Mention of trade names or commercial products in this operating procedure does not constitute endorsement or recommendation for use.

1.3 Documentation/Verification

This procedure was prepared by persons deemed technically competent by SESD management, based on their knowledge, skills and abilities and have been tested in practice and reviewed in print by a subject matter expert. The official copy of this procedure resides on the SESD local area network (LAN). The Document Control Coordinator (DCC) is responsible for ensuring the most recent version of the procedure is placed on the LAN, and for maintaining records of review conducted prior to its issuance.

1.4 References

International Air Transport Authority (IATA). Dangerous Goods Regulations, Most Recent Version

SESD Operating Procedure for Field Equipment Cleaning and Decontamination, SESDPROC-205, Most Recent Version

SESD Operating Procedure for Field Equipment Cleaning and Decontamination at the FEC, SESDPROC-206, Most Recent Version

SESD Operating Procedure for Field Sampling Quality Control, SESDPROC-011, Most Recent Version

SESD Operating Procedure for Field X-Ray Fluorescence (XRF) Measurement, SESDPROC-107, Most Recent Version

SESD Operating Procedure for Logbooks, SESDPROC-010, Most Recent Version

SESD Operating Procedure for Sample and Evidence Management, SESDPROC-005, Most Recent Version

Title 49 Code of Federal Regulations, Pts. 171 to 179, Most Recent Version

US EPA Test Methods for Evaluating Solid Waste, Physical/Chemical Methods SW-846, Most Recent Version (Method 5035)

US EPA. Safety, Health and Environmental Management Program (SHEMP) Procedures and Policy Manual. Region 4 SESD, Athens, GA, Most Recent Version

1.5 General Precautions

1.5.1 Safety

Proper safety precautions must be observed when collecting soil samples. Refer to the SESD Safety, Health and Environmental Management Program (SHEMP) Procedures and Policy Manual and any pertinent site-specific Health and Safety Plans (HASP) for guidelines on safety precautions. These guidelines, however, should only be used to complement the judgment of an experienced professional. The reader should address chemicals that pose specific toxicity or safety concerns and follow any other relevant requirements, as appropriate.

1.5.2 Procedural Precautions

The following precautions should be considered when collecting soil samples:

- Special care must be taken not to contaminate samples. This includes storing samples in a secure location to preclude conditions which could alter the properties of the sample. Samples shall be custody sealed during long-term storage or shipment.
- Collected samples are in the custody of the sampler or sample custodian until the samples are relinquished to another party.
- If samples are transported by the sampler, they will remain under his/her custody or be secured until they are relinquished.
- Shipped samples shall conform to all U.S. Department of Transportation (DOT) rules of shipment found in Title 49 of the Code of Federal Regulations (49 CFR parts 171 to 179), and/or International Air Transportation Association

(IATA) hazardous materials shipping requirements found in the current edition of IATA's Dangerous Goods Regulations.

- Documentation of field sampling is done in a bound logbook.
- Chain-of-custody documents shall be filled out and remain with the samples until custody is relinquished.
- All shipping documents, such as air bills, bills of lading, etc., shall be retained by the project leader in the project files.
- Sampling in landscaped areas: Cuttings should be placed on plastic sheeting and returned to the borehole upon completion of the sample collection. Any 'turf plug' generated during the sampling process should be returned to the borehole.
- Sampling in non-landscaped areas: Return any unused sample material back to the auger, drill or push hole from which the sample was collected.

2 Special Sampling Considerations

2.1 Special Precautions for Trace Contaminant Soil Sampling

- A clean pair of new, non-powdered, disposable gloves will be worn each time a different sample is collected and the gloves should be donned immediately prior to sampling. The gloves should not come in contact with the media being sampled and should be changed any time during sample collection when their cleanliness is compromised.
- Sample containers with samples suspected of containing high concentrations of contaminants shall be handled and stored separately.
- All background samples shall be segregated from obvious high-concentration or waste samples. Sample collection activities shall proceed progressively from the least suspected contaminated area to the most suspected contaminated area. Samples of waste or highly-contaminated media must not be placed in the same ice chest as environmental (i.e., containing low contaminant levels) or background samples.
- If possible, one member of the field sampling team should take all the notes and photographs, fill out tags, etc., while the other member(s) collect the samples.
- Samplers must use new, verified/certified-clean disposable or non-disposable equipment cleaned according to procedures contained in the SESD Operating Procedure for Field Equipment Cleaning and Decontamination (SESDPROC-205), for collection of samples for trace metals or organic compound analyses.

2.2 Sample Homogenization

1. If sub-sampling of the primary sample is to be performed in the laboratory, transfer the entire primary sample directly into an appropriate, labeled sample container(s). Proceed to step 4.

2. If sub-sampling the primary sample in the field or compositing multiple primary samples in the field, place the sample into a glass or stainless steel homogenization container and mix thoroughly. Each aliquot of a composite sample should be of the same approximate volume.

3. All soil samples must be thoroughly mixed to ensure that the sample is as representative as possible of the sample media. ***Samples for VOC analysis are not homogenized.*** The most common method of mixing is referred to as quartering. The quartering procedure should be performed as follows:

- The material in the sample pan should be divided into quarters and each quarter should be mixed individually.
- Two quarters should then be mixed to form halves.
- The two halves should be mixed to form a homogenous matrix.

  This procedure should be repeated several times until the sample is adequately mixed. If round bowls are used for sample mixing, adequate mixing is achieved by stirring the material in a circular fashion, reversing direction, and occasionally turning the material over.

4. Place the sample into an appropriate, labeled container(s) by using the alternate shoveling method and secure the cap(s) tightly. The alternate shoveling method involves placing a spoonful of soil in each container in sequence and repeating until the containers are full or the sample volume has been exhausted. Threads on the container and lid should be cleaned to ensure a tight seal when closed.

2.3 Dressing Soil Surfaces

Any time a vertical or near vertical surface is sampled, such as achieved when shovels or similar devices are used for subsurface sampling, the surface should be dressed (scraped) to remove smeared soil. This is necessary to minimize the effects of contaminant migration interferences due to smearing of material from other levels.

2.4 Quality Control

If possible, a control sample should be collected from an area not affected by the possible contaminants of concern and submitted with the other samples. This control sample should be collected as close to the sampled area as possible and from the same soil type. Equipment blanks should be collected if equipment is field cleaned and re-used on-site or if necessary to document that low-level contaminants were not introduced by sampling tools. SESD Operating Procedure for Field Sampling Quality Control (SESDPROC-011) contains other procedures that may be applicable to soil sampling investigations.

2.5 Records

Field notes, recorded in a bound field logbook, as well as chain-of-custody documentation will be generated as described in the SESD Operating Procedure for Logbooks (SESDPROC-010) and the SESD Operating Procedure for Sample and Evidence Management (SESDPROC-005).

3 Method 5035

The procedures outlined here are summarized from *Test Methods for Evaluating Solid Waste, Physical/Chemical Methods SW-846, Method 5035.*

3.1 Soil Samples for Volatile Organic Compounds (VOC) Analysis

If samples are to be analyzed for VOCs, they should be collected in a manner that minimizes disturbance of the sample. For example, when sampling with an auger bucket, the sample for VOC analysis should be collected directly from the auger bucket (preferred) or from minimally disturbed material immediately after an auger bucket is emptied into the pan. The sample shall be containerized by filling an En Core® Sampler or other Method 5035 compatible container. ***Samples for VOC analysis are not homogenized.*** Preservatives may be required for some samples with certain variations of Method 5035. Consult the method or the principal analytical chemist to determine if preservatives are necessary.

3.2 Soil Sampling (Method 5035)

The following sampling protocol is recommended for site investigators assessing the extent of VOCs in soils at a project site. Because of the large number of options available, careful coordination between field and laboratory personnel is needed. The specific sampling containers and sampling tools required will depend upon the detection levels and intended data use. Once this information has been established, selection of the appropriate sampling procedure and preservation method best applicable to the investigation can be made.

3.2.1 Equipment

Soil for VOC analyses may be retrieved using any of the SESD soil sampling methods described in Sections 4 through 8 of this procedure. Once the soil has been obtained, the En Core® Sampler, syringes, stainless steel spatula, standard 2-oz. soil VOC container, or pre-prepared 40 mL vials may be used/required for sub-sampling. The specific sample containers and the sampling tools required will depend upon the data quality objectives established for the site or sampling investigation. The various sub-sampling methods are described below.

3.2.2 Sampling Methodology - Low Concentrations (<200 µg/kg)

When the total VOC concentration in the soil is expected to be less than 200 µg/kg, the samples may be collected directly with the En Core® Sampler or syringe. If using the syringes, the sample must be placed in the sample container (40 mL pre-prepared vial) immediately to reduce volatilization losses. The 40 mL vials should contain 10 mL of organic-free water for an un-preserved sample or approximately

10 mL of organic-free water and a preservative. It is recommended that the 40 mL vials be prepared and weighed by the laboratory (commercial sources are available which supply preserved and tared vials). When sampling directly with the En Core® Sampler, the vial must be immediately capped and locked.

A soil sample for VOC analysis may also be collected with conventional sampling equipment. A sample collected in this fashion must either be placed in the final sample container (En Core® Sampler or 40 mL pre-prepared vial) immediately or the sample may be immediately placed into an intermediate sample container with no head space. If an intermediate container (usually 2-oz. soil jar) is used, the sample must be transferred to the final sample container (En Core® Sampler or 40 mL pre-prepared vial) as soon as possible, not to exceed 30 minutes.

NOTE: After collection of the sample into either the En Core® Sampler or other container, the sample must immediately be stored in an ice chest and cooled.

Soil samples may be prepared for shipping and analysis as follows:

En Core® Sampler - the sample shall be capped, locked, and secured in the original foil bag. All foil bags containing En Core® samplers are then placed in a plastic bag and sealed with custody tape, if required.

Syringe - Add about 3.7 cc (approximately 5 grams) of sample material to 40-mL pre-prepared containers. Secure the containers in a plastic bag. Do not use a custody seal on the container; place the custody seal on the plastic bag. Note: When using the syringes, it is important that no air is allowed to become trapped behind the sample prior to extrusion, as this will adversely affect the sample.

Stainless Steel Laboratory Spatulas - Add between 4.5 and 5.5 grams (approximate) of sample material to 40 mL containers. Secure the containers in a plastic bag. Do not use a custody seal on the container; place the custody seal on the plastic bag.

3.2.3 Sampling Methodology - High Concentrations (>200 µg/kg)

Based upon the data quality objectives and the detection level requirements, this high level method may also be used. Specifically, the sample may be packed into a single 2-oz. glass container with a screw cap and septum seal. The sample container must be filled quickly and completely to eliminate head space. Soils\sediments containing high total VOC concentrations may also be collected as described in Section 3.2.2, Sampling Methodology - Low Concentrations, and preserved using 10 mL methanol.

3.2.4 Special Techniques and Considerations for Method 5035

Effervescence

If low concentration samples effervesce (rapidly form bubbles) from contact with the acid preservative, then either a test for effervescence must be performed prior to sampling, or the investigators must be prepared to collect each sample both preserved or un-preserved, as needed, or all samples must be collected unpreserved.

To check for effervescence, collect a test sample and add to a pre-preserved vial. If preservation (acidification) of the sample results in effervescence then preservation by acidification is not acceptable, and the sample must be collected un-preserved.

If effervescence occurs and only pre-preserved sample vials are available, the preservative solution may be placed into an appropriate hazardous waste container and the vials triple rinsed with organic free water. An appropriate amount of organic free water, equal to the amount of preservative solution, should be placed into the vial. The sample may then be collected as an un-preserved sample. Note: the amount of organic free water placed into the vials will have to be accurately measured.

Sample Size

While this method is an improvement over earlier ones, field investigators must be aware of an inherent limitation. Because of the extremely small sample size and the lack of sample mixing, sample representativeness for VOCs may be reduced compared to samples with larger volumes collected for other constituents. The sampling design and objectives of the investigation should take this into consideration.

Holding Times

Sample holding times are specified in the Analytical Support Branch *Laboratory Operations and Quality Assurance Manual* (ASBLOQAM), Most Recent Version. Field investigators should note that the holding time for an un-preserved VOC soil/sediment sample on ice is 48 hours. Arrangements should be made to ship the soil/sediment VOC samples to the laboratory by overnight delivery the day they are collected so the laboratory may preserve and/or analyze the sample within 48 hours of collection.

Percent Solids

Samplers must ensure that the laboratory has sufficient material to determine percent solids in the VOC soil/sediment sample to correct the analytical results to dry weight. If other analyses requiring percent solids determination are being performed upon the sample, these results may be used. If not, a separate sample (minimum of 2 oz.) for percent solids determination will be required. The sample collected for percent solids may also be used by the laboratory to check for preservative compatibility.

Safety

Methanol is a toxic and flammable liquid. Therefore, methanol must be handled with all required safety precautions related to toxic and flammable liquids. Inhalation of methanol vapors must be avoided. Vials should be opened and closed quickly during the sample preservation procedure. Methanol must be handled in a ventilated area. Use protective gloves when handling the methanol vials. Store methanol away from sources of ignition such as extreme heat or open flames. The vials of methanol should be stored in a cooler with ice at all times.

Shipping

Methanol and sodium bisulfate are considered dangerous goods, therefore shipment of samples preserved with these materials by common carrier is regulated by the U.S. Department of Transportation and the International Air Transport Association (IATA). The rules of shipment found in Title 49 of the Code of Federal Regulations (49 CFR parts 171 to 179) and the current edition of the IATA Dangerous Goods Regulations must be followed when shipping methanol and sodium bisulfate. Consult the above documents or the carrier for additional information. Shipment of the quantities of methanol and sodium bisulfate used for sample preservation falls under the exemption for small quantities.

The summary table on the following page lists the options available for compliance with SW846 Method 5035. The advantages and disadvantages are noted for each option. SESD's goal is to minimize the use of hazardous material (methanol and sodium bisulfate) and minimize the generation of hazardous waste during sample collection.

Table 1: Method 5035 Summary

OPTION	PROCEDURE	ADVANTAGES	DISADVANTAGES
1	Collect two 40 mL vials with ≈ 5 grams of sample, and one 2 oz. glass jar w/septum lid for screening, % moisture and preservative compatibility.	Screening conducted by lab.	Presently a 48-hour holding time for unpreserved samples. Sample containers must be tared.
2	Collect three En Core® samplers, and one 2 oz. glass jar w/septum lid for screening, % solids.	Lab conducts all preservation/preparation procedures.	Presently a 48- hour holding time for preparation of samples.
3	Collect two 40 mL vials with 5 grams of sample and preserve w/methanol or sodium bisulfate, and one 2-oz. glass jar w/septum lid for screening, % solids .	High level VOC samples may be composited. Longer holding time.	Hazardous materials used in the field. Sample containers must be tared.
4	Collect one 2-oz. glass jar w/septum lid for analysis, % solids (high level VOC only).	Lab conducts all preservation/preparation procedures.	May have significant VOC loss.

4 Manual Soil Sampling Methods

4.1 General

These methods are used primarily to collect surface and shallow subsurface soil samples. Surface soils are generally classified as soils between the ground surface and 6 to 12 inches below ground surface. The most common interval is 0 to 6 inches; however, the data quality objectives of the investigation may dictate another interval, such as 0 to 3 inches for risk assessment purposes. The shallow subsurface interval may be considered to extend from approximately 12 inches below ground surface to a site-specific depth at which sample collection using manual collection methods becomes impractical.

If a thick, matted root zone, gravel, concrete, etc. is present at or near the surface, it should be removed before the sample is collected. The depth measurement for the sample begins at the top of the soil horizon, immediately following any removed materials.

When compositing, make sure that each composite location (aliquot) consist of equal volumes, i.e., same number of equal spoonfuls.

4.2 Spoons

Stainless steel spoons may be used for surface soil sampling to depths of approximately 6 inches below ground surface where conditions are generally soft and non-indurated, and there is no problematic vegetative layer to penetrate.

4.2.1 Special Considerations When Using Spoons

- When using stainless steel spoons, consideration must be given to the procedure used to collect the volatile organic compound sample. If the soil being sampled is cohesive and holds its in situ texture in the spoon, the En Core® Sampler or syringe used to collect the sub-sample for Method 5035 should be plugged directly from the spoon. If, however, the soil is not cohesive and crumbles when removed from the ground surface for sampling, consideration should be given to plugging the sample for Method 5035 directly from the ground surface at a depth appropriate for the investigation Data Quality Objectives.

4.3 Hand Augers

Hand augers may be used to advance boreholes and collect soil samples in the surface and shallow subsurface intervals. Typically, 4-inch stainless steel auger buckets with cutting heads are used. The bucket is advanced by simultaneously pushing and turning using an attached handle with extensions (if needed).

4.3.1 Surface Soil Sampling

When conducting surface soil sampling with hand augers, the auger buckets may be used with a handle alone or with a handle and extensions. The bucket is advanced to the appropriate depth and the contents are transferred to the homogenization container for processing. Observe precautions for volatile organic compound sample collection found in Section 3, Method 5035.

4.3.2 Subsurface Soil Sampling

Hand augers are the most common equipment used to collect shallow subsurface soil samples. Auger holes are advanced one bucket at a time until the sample depth is achieved. When the sample depth is reached, the bucket used to advance the hole is removed and a clean bucket is attached. The clean auger bucket is then placed in the hole and filled with soil to make up the sample and removed.

The practical depth of investigation using a hand auger depends upon the soil properties and depth of investigation. In sand, augering is usually easily performed, but the depth of collection is limited to the depth at which the sand begins to flow or collapse. Hand augers may also be of limited use in tight clays or cemented sands. In these soil types, the greater the depth attempted, the more difficult it is to recover a sample due to increased friction and torqueing of the hand auger extensions. At some point these problems become so severe that power equipment must be used.

4.3.3 Special Considerations for Soil Sampling with the Hand Auger

- Because of the tendency for the auger bucket to scrape material from the sides of the auger hole while being extracted, the top several inches of soil in the auger bucket should be discarded prior to placing the bucket contents in the homogenization container for processing.
- Observe precautions for volatile organic compound (VOC) sample collection found in Section 3, Method 5035. Collect the VOC sample directly from the auger bucket, if possible.
- Power augers, such as the Little Beaver® and drill rigs may be used to advance boreholes to depths for subsurface soil sampling with the hand auger. They may not be used for sample collection. When power augers are used to advance a borehole to depth for sampling, care must be taken that exhaust fumes, gasoline and/or oil do not contaminate the borehole or area in the immediate vicinity of sampling.
- When moving to a new sampling location, the entire hand auger assembly must be replaced with a properly decontaminated hand auger assembly.

5 Direct Push Soil Sampling Methods

5.1 General

These methods are used primarily to collect shallow and deep subsurface soil samples. Three samplers are available for use within the Division's direct push tooling inventory. All of the sampling tools involve the collection and retrieval of the soil sample within a thin-walled liner. The following sections describe each of the specific sampling methods that can be accomplished using direct push techniques, along with details specific to each method. While SESD currently uses the sample tooling described, tooling of similar design and materials is acceptable.

If gravel, concrete, etc. is present at or near the surface, it should be removed before the sample is collected. The depth measurement for the sample begins at the top of the soil horizon, immediately following any removed materials. Turf grass is not typically removed prior to sampling with these devices.

5.2 Large Bore® Soil Sampler

The Large Bore® (LB) sampler is a solid barrel direct push sampler equipped with a piston-rod point assembly used primarily for collection of depth-discrete subsurface soil samples. The sample barrel is approximately 30-inches (762 mm) long and has a 1.5-inch (38 mm) outside diameter. The LB® sampler is capable of recovering a discrete sample core 22 inches x 1.0 inch (559 mm x 25 mm) contained inside a removable liner. The resultant sample volume is a maximum of 283 mL.

After the LB® sample barrel is equipped with the cutting shoe and liner, the piston-rod point assembly is inserted, along with the drive head and piston stop assembly. The assembled sampler is driven to the desired sampling depth, at which time the piston stop pin is removed, freeing the push point. The LB® sampler is then pushed into the soil a distance equal to the length of the LB® sample barrel. The probe rod string, with the LB® sampler attached, is then removed from the subsurface. After retrieval, the LB® sampler is then removed from the probe rod string. The drive head is then removed to allow removal of the liner and soil sample.

5.3 Macro-Core® Soil Sampler

The Macro-Core® (MC) sampler is a solid barrel direct push sampler equipped with a piston-rod point assembly used primarily for collection of either continuous or depth-discrete subsurface soil samples. Although other lengths are available, the standard MC® sampler has an assembled length of approximately 52 inches (1321 mm) with an outside diameter of 2.2 inches (56 mm). The MC® sampler is capable of recovering a discrete sample core 45 inches x 1.5 inches (1143 mm x 38 mm) contained inside a removable liner. The resultant sample volume is a maximum of 1300 mL. The MC® sampler may be used

in either an open-tube or closed-point configuration. Although the MC® sampler can be used as an open-barrel sampler, in SESD usage, the piston point is always used to prevent the collection of slough from the borehole sides.

5.4 Dual Tube Soil Sampling System

The Dual Tube 21 soil sampling system is a direct push system for collecting continuous core samples of unconsolidated materials from within a sealed outer casing of 2.125-inch (54 mm) OD probe rod. The samples are collected within a liner that is threaded onto the leading end of a string of 1.0-inch diameter probe rod. Collected samples have a volume of up to 800 mL in the form of a 1.125-inch x 48-inch (29 mm x 1219 mm) core. Use of this method allows for collection of continuous core inside a cased hole, minimizing or preventing cross-contamination between different intervals during sample collection. The outer casing is advanced, one core length at a time, with only the inner probe rod and core being removed and replaced between samples. If the sampling zone of interest begins at some depth below ground surface, a solid drive tip must be used to drive the dual tube assembly and core to its initial sample depth.

5.5 Special Considerations When Using Direct Push Sampling Methods

- *Liner Use and Material Selection* – Direct Push Soil Samples are collected within a liner to facilitate removal of sample material from the sample barrel. The liners may only be available in a limited number of materials for a given sample tool, although overall, liners are available in brass, stainless steel, cellulose acetate butyrate (CAB), polyethylene terepthalate glycol (PETG), polyvinyl chloride (PVC) and Teflon®. For most SESD investigations, the standard polymer liner material for a sampling tool will be acceptable. When the study objectives require very low reporting levels or unusual contaminants of concern, the use of more inert liner materials such as Teflon® or stainless steel may be necessary.

- *Sample Orientation* – When the liners and associated sample are removed from the sample tubes, it is important to maintain the proper orientation of the sample. This is particularly important when multiple sample depths are collected from the same push. It is also important to maintain proper orientation to define precisely the depth at which an aliquot was collected. Maintaining proper orientation is typically accomplished using vinyl end caps. Convention is to place red caps on the top of the liner and black caps on the bottom to maintain proper sample orientation. Orientation can also be indicated by marking on the exterior of the liner with a permanent marker.

- *Core Catchers* – Occasionally the material being sampled lacks cohesiveness and is subject to crumbling and falling out of the sample liner. In cases such as these, the use of core catchers on the leading end of the sampler may help

retain the sample until it is retrieved to the surface. Core catchers may only be available in specific materials and should be evaluated for suitability. However, given the limited sample contact that core-catchers have with the sample material, most standard core-catchers available for a tool system will be acceptable.

- *Decontamination* – The cutting shoe and piston rod point are to be decontaminated between each sample, using the procedures specified for the collection of trace organic and inorganic compounds found in Field Equipment and Decontamination – SESDPROC-205, most recent version. Within a borehole, the sample barrel, rods, and drive head may be subjected to an abbreviated cleaning to remove obvious and loose material, but must be cleaned between boreholes using the procedures specified for downhole drilling equipment in Field Equipment and Decontamination – SESDPROC-205, most recent version.

- *Decommissioning* – Boreholes must be decommissioned after the completion of sampling. Boreholes less than 10 feet deep that remain open and do not approach the water table may be decommissioned by pouring 30% solids bentonite grout from the surface or pouring bentonite pellets from the surface, hydrating the pellets in lifts. Boreholes deeper than 10 feet, or any borehole that intercepts groundwater, must be decommissioned by pressure grouting with 30% solids bentonite grout, either through a re-entry tool string or through tremie pipe introduced to within several feet of the borehole bottom.

- *VOC Sample Collection* – Observe precautions for volatile organic compound sample collection found in Section 3 of this procedure.

6 Split Spoon/Drill Rig Methods

6.1 General

Split spoon sampling methods are used primarily to collect shallow and deep subsurface soil samples. All split spoon samplers, regardless of size, are basically split cylindrical barrels that are threaded on each end. The leading end is held together with a beveled threaded collar that functions as a cutting shoe. The other end is held together with a threaded collar that serves as the sub used to attach the spoon to the string of drill rod. Two basic methods are available for use, including the smaller diameter standard split spoon, driven with the drill rig safety hammer, and the larger diameter continuous split spoon, advanced inside and slightly ahead of the lead auger during hollow stem auger drilling. The following sections describe each of the specific sampling methods, along with details specific to each method.

If gravel, concrete, etc. is present at or near the surface, it should be removed before the sample is collected. The depth measurement for the sample begins at the top of the soil horizon, immediately following any removed materials. Turf grass is not typically removed prior to sampling with these devices.

6.2 Standard Split Spoon

A drill rig is used to advance a borehole to the target depth. The drill string is then removed and a standard split spoon is attached to a string of drill rod. Split spoons used for soil sampling must be constructed of stainless steel and are typically 2.0-inches OD (1.5-inches ID) and 18-inches to 24-inches in length. Other diameters and lengths are common and may be used if constructed of the proper material. After the spoon is attached to the string of drill rod, it is lowered into the borehole. The safety hammer is then used to drive the split spoon into the soil at the bottom of the borehole. After the split spoon has been driven into the soil, filling the spoon, it is retrieved to the surface, where it is removed from the drill rod string and opened for sample acquisition.

6.3 Continuous Split Spoon

The continuous split spoon is a large diameter split spoon that is advanced into the soil column inside a hollow stem auger. Continuous split spoons are typically 3 to 5 inches in diameter and either 5 feet or 10 feet in length, although the 5-foot long samplers are most common. After the auger string has been advanced into the soil column a distance equal to the length of the sampler being used it is returned to the surface. The sampler is removed from inside the hollow stem auger and the threaded collars are removed. The split spoon is then opened for sampling.

6.4 Special Considerations When Using Split Spoon Sampling Methods

- Always discard the top several inches of material in the spoon before removing any portion for sampling. This material normally consists of borehole wall material that has sloughed off of the borehole wall after removal of the drill string prior to and during inserting the split spoon.
- Observe precautions for volatile organic compound sample collection found in Section 3, Method 5035.

7 Shelby Tube/Thin-Walled Sampling Methods

7.1 General

Shelby tubes, also referred to generically as thin-walled push tubes or Acker thin-walled samplers, are used to collect subsurface soil samples in cohesive soils and clays during drilling activities. In addition to samples for chemical analyses, Shelby tubes are also used to collect relatively undisturbed soil samples for geotechnical analyses, such as hydraulic conductivity and permeability, to support hydrogeologic characterizations at hazardous waste and other sites.

If gravel, concrete, etc. is present at or near the surface, it should be removed before the sample is collected. The depth measurement for the sample begins at the top of the soil horizon, immediately following any removed materials. Turf grass is not typically removed prior to sampling with this device.

7.2 Shelby Tube Sampling Method

A typical Shelby tube is 30 inches in length and has a 3.0-inch OD (2.875-inch ID) and may be constructed of steel, stainless steel, galvanized steel, or brass. They also typically are attached to push heads that are constructed with a ball-check to aid in holding the contained sample during retrieval. If used for collecting samples for chemical analyses, it must be constructed of stainless steel. If used for collecting samples for standard geotechnical parameters, any material is acceptable.

To collect a sample, the tube is attached to a string of drill rod and is lowered into the borehole, where the sampler is then pressed into the undisturbed material by hydraulic force. After retrieval to the surface, the tube containing the sample is then removed from the sampler head. If samples for chemical analyses are needed, the soil contained inside the tube is then removed for sample acquisition. If the sample is collected for geotechnical parameters, the tube is typically capped, maintaining the sample in its relatively undisturbed state, and shipped to the appropriate geotechnical laboratory.

7.3 Special Considerations When Using Split Spoon Sampling Methods

Observe precautions for volatile organic compound sample collection found in Section 3, Method 5035.

8 Backhoe Sampling Method

8.1 General

Backhoes may be used in the collection of surface and shallow subsurface soil samples. The trenches created by excavation with a backhoe offer the capability of collecting samples from very specific intervals and allow visual correlation with vertically and horizontally adjacent material. If possible, the sample should be collected without entering the trench. Samples may be obtained from the trench wall or they may be obtained directly from the bucket at the surface. The following sections describe various techniques for safely collecting representative soil samples with the aid of a backhoe.

The depth measurement for the sample begins at the top of the soil horizon.

8.2 Scoop-and-Bracket Method

If a sample interval is targeted from the surface, it can be sampled using a stainless steel scoop and bracket. First a scoop and bracket are affixed to a length of conduit and is lowered into the backhoe pit. The first step is to take the scoop and scrape away the soil comprising the surface of the excavated wall. This material likely represents soil that has been smeared by the backhoe bucket from adjacent material. After the smeared material has been scraped off, the original stainless steel scoop is removed and a clean stainless steel scoop is placed on the bracket. The clean scoop can then be used to remove sufficient volume of soil from the excavation wall to make up the required sample volume.

8.3 Direct-from-Bucket Method

It is also possible to collect soil samples directly from the backhoe bucket at the surface. Some precision with respect to actual depth or location may be lost with this method but if the soil to be sampled is uniquely distinguishable from the adjacent or nearby soils, it may be possible to characterize the material as to location and depth. In order to ensure representativeness, it is also advisable to dress the surface to be sampled by scraping off any smeared material that may cross-contaminate the sample.

8.4 Special Considerations When Sampling with a Backhoe

- Do not physically enter backhoe excavations to collect a sample. Use either procedure 8.2, Scoop-and-Bracket Method, or procedure 8.3, Direct-from-Bucket Method to obtain soil for sampling.
- Smearing is an important issue when sampling with a backhoe. Measures must be taken, such as dressing the surfaces to be sampled (see Section 2.3), to mitigate problems with smearing.

- Paint, grease and rust must be removed and the bucket decontaminated prior to sample collection.
- Observe precautions for volatile organic compound sample collection found in Section 3, Method 5035.

APPENDIX F

BEST MANAGEMENT PRACTICES FOR STORM WATER CONTROL

Appendix F

Alabama Best Management Practices
MSFC-027, Inactive Waste Accumulation Area
Operable Unit 18

U.S. Army Garrison-Redstone
Madison County, Alabama

Task Order 0014
Contract Number W91ZLK-09-D-0006
CB&I Project No. 500382

April 2016

Prepared for:

Mission & Installation Contracting Command
ATTN: MICC Center – FSH
2107 17th Street
Building 4197, Suite 15
Fort Sam Houston, Texas 78234-5015

Prepared by:

CB&I Federal Services LLC
2410 Cherahala Blvd
Knoxville, Tennessee 37932

Reference:

Alabama Handbook for Erosion Control, Sediment Control and Stormwater Management on Construction Sites and Urban Areas. Auburn, AL. September 2014.

Site Preparation

A. Construction Exit Pad (CEP)

B. Land Grading (LG)

Surface Stabilization

C. Permanent Seeding (PS)

D. Temporary Seeding (TS)

Runoff Conveyance

E. Check Dam (CD)

F. Diversion (DV)

G. Grass Swale (GS)

Sediment Control

H. Sediment Barrier (SB)

A. Construction Exit Pad (CEP)

Construction Exit Pad (CEP)

Practice Description

A construction pad is a stone base pad designed to provide a buffer area where mud and caked soil can be removed from the tires of construction vehicles to avoid transporting it onto public roads. This practice applies anywhere traffic will be leaving a construction site and moving directly onto a public road or street.

Planning Considerations

Roads and streets adjacent to construction sites should be kept clean for the general safety and welfare of the public. A construction exit pad (Figure CEP-1) should be provided where mud can be removed from construction vehicle tires before they enter a public road.

Where possible the construction exit pad should be located and constructed at a site where surface runoff from the pad will not transport sediment from the pad off the site. If the pad slope toward the road exceeds 2%, a diversion ridge 6” to 8” high with 3:1 side slopes should be constructed across the foundation approximately 15 feet from the entrance. This diversion ridge should divert surface runoff from the pad away from the road and into a sediment trap or basin.

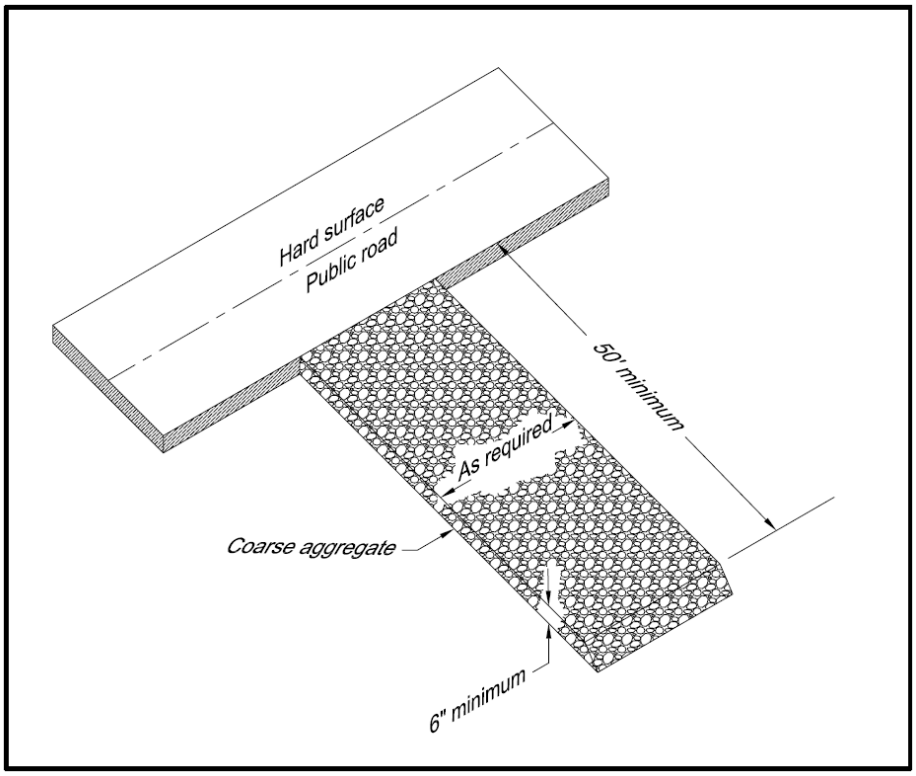

Figure CEP-1 Gravel Construction Exit

If the action of the vehicle traveling over the gravel pad does not sufficiently remove the mud or if the site is in a particularly sensitive area, a washing facility should be included with the pad (Figure CEP-2). When a washing facility is required all wash water shall be diverted to a sediment trap or basin.

If the construction exit pad is located in an area with soils that will not support traffic when wet, an underliner of geotextile will be required to provide stability to the pad.

Construction of stabilized roads throughout the development site should be considered to lessen the amount of mud transported by vehicular traffic. The construction exit pad should be located to provide for maximum use by construction vehicles.

Consideration should be given to limiting construction vehicles to only one ingress and egress point. Measures may be necessary to make existing traffic use the construction exit pad.

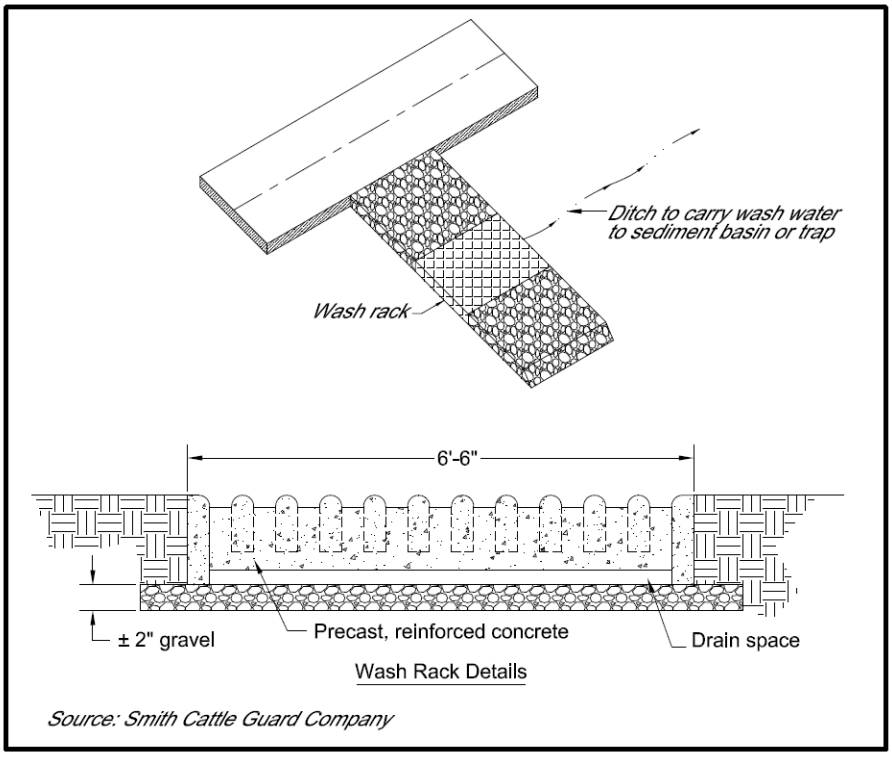

Figure CEP-2 Construction Exit with Wash Rack

Design Criteria

Aggregate size

Aggregate should be Alabama Highway Department coarse aggregate gradation No.1.

Pad Thickness

The exit pad shall have a minimum aggregate thickness of 6”.

Geotextiles

A non-woven geotextile shall be placed underneath the aggregate. The geotextile shall be of the strength and durability required for the project to ensure the aggregate and soil base are stable. Generally, the non-woven geotextile should meet the requirements found in ASSHTO M288.

Pad Length

The exit pad should provide for entering and parking the longest anticipated construction vehicles. A pad is typically 50 feet long but the required length may be longer or shorter.

Pad Width

The exit pad width is typically 20 feet but may be narrower or wider to equal the full width of the vehicular egress.

Washing

A washing facility shall be provided if necessary to prevent mud and caked soil from being transported to public streets and highways. It shall be constructed of concrete, stone, and/or other durable materials. Provisions shall be provided for the mud and other material to be carried away from the washing facility to a sediment trap or basin to allow for settlement of the sediment from the runoff before it is released from the site.

B. Land Grading (LG)

Land Grading (LG)

Practice Description

Land grading is reshaping of the ground surface to provide suitable topography for buildings, facilities and other land uses, to control surface runoff, and to minimize soil erosion and sedimentation both during and after construction. This practice applies to sites where the existing topography must be modified to prepare for another land use, or where adapting proposed development to the existing landscape can reduce the erosion potential of the site and the cost of installing erosion and sediment control measures. In some instances other practices such as diversions or benches can be used to reduce the length of continuous slopes and reduce erosion potential.

Planning Considerations

A detailed plan should be developed by a qualified design professional for all land grading activities at the project site. The plan should show all areas to be disturbed, the areas of cut, areas of fill, and the finished elevation for all graded areas. Areas that will be mowed after the site is developed should have slopes planned that are not too steep for the type of mowing equipment that will be used for regular maintenance.

The grading plan should be designed to protect existing vegetation where possible, especially around natural drainageways. Grading activities should be scheduled to minimize the area disturbed at any one time during the construction process. The plan should include provisions for stabilizing disturbed areas immediately after final grading is completed. Provisions should also be made to

protect existing underground utilities. Finally, topsoil should be removed and stockpiled for use in revegetating the site.

The grading plan should also include necessary practices for controlling sediment and erosion at the site. These practices could include stable outlets and slope breaks such as diversions or benches.

Design Criteria

Site Preparation

A detailed survey of the construction site should be performed by a qualified surveyor prior to grading plan development. This survey should include existing topographic information at the site including existing elevations, existing drainage patterns, locations of existing overhead and underground utilities, and construction limit boundaries.

The grading plan should require that the existing topsoil at sites to be graded be removed as the first step in the grading process. The plan should include a location on the construction site where topsoil will be stockpiled. Stockpiled topsoil should be protected by temporary vegetation (see Temporary Vegetation practice) or other appropriate temporary cover, such as plastic, until it is used to cover disturbed areas in advance of permanent vegetation of the site.

The grading plan should include a schedule of disturbance activities that minimizes the area disturbed at any point in time using sequencing and staging concepts. In areas where clearing of existing vegetation is planned, the area should be cleared and grubbed by removing trees, vegetation, roots and other debris such as trash. In areas to be filled all loose or weak soil and oversized rocks should be removed from the area. The foundation of the area to be filled should consist of soil or rock material of adequate strength to support the proposed fill material and the structures to be built at the site. The exact depth of material to be removed should be determined by a qualified geotechnical professional according to accepted engineering standards.

Grading

A plan for placement of fill should be developed by a qualified geotechnical professional. The plan should specify the source of fill materials, which should be obtained on site if possible. Materials used for fill, when placed according to the plans and specifications, should provide sufficient strength to support structures planned for construction at the location.

Loose fill material should be placed in layers not exceeding 9” in thickness. The materials should be compacted to a moisture content and to a dry density that will produce the design bearing strength required for structures planned at the site. A qualified geotechnical engineer should provide fill placement specifications using standard accepted engineering practices.
Long and/or steep slope lengths can result in rill and gully erosion on slopes. Erosion on these type slopes can be minimized by breaking the slope with

diversions or benches (see Diversion practice). Diversion widths should be compatible with the expected maintenance equipment. Care is needed in locating outlets that will be stable and not cause gully erosion. The following table gives general guidance on the horizontal spacing of slope breaks:

Table LG-1 Guidelines for Spacing Slope Breaks [1]

Slope (H:V)	Horizontal Spacing (Ft)
1:1	20
2:1	40
3:1	60
4:1 and 5:1	80
6:1 to 9:1	120
10:1 or flatter	200

[1] Adjustments in spacing may be made to account for soil and site conditions and professional experience of the site designer.

In areas where seepage and ground water are present subsurface drains should be installed to improve slope stability or soil bearing capacity (see Subsurface Drain practice).

Steep slopes should be avoided if possible. Slopes that are to be vegetated should be 2 horizontal to 1 vertical or flatter. If the slope is to be maintained by tractor or other equipment the slope should be 3 horizontal to 1 vertical or flatter. Slopes should be designed to blend with surrounding topography as much as possible.

Erosion Control

The grading plan should include provisions for stabilization of graded areas immediately after final grading is completed. On areas that will have no additional disturbance, permanent vegetation should be applied immediately to the site (see Permanent Seeding practice) if grading is finished during the planting season. If grading is finished outside of the recommended planting dates a temporary cover should be installed using a Temporary Seeding or other appropriate cover and the Permanent Seeding planned for the next planting period. On areas where work is to be interrupted or delayed for 14 calendar days or longer, such as topsoil stockpiles, the area should be stabilized using mulch or temporary seeding (see Mulching or Temporary Seeding practice). Other stabilization measures such as hydraulic mulch or erosion control blankets should be used in extreme conditions, such as steep slopes and channels.

Where practical, runoff from undisturbed off-site areas should be diverted around the construction site to prevent erosion on the disturbed areas (see Diversion practice).

Sediment Control

Required sediment control practices should be installed before the land disturbance activities in the drainage area of the sediment control practices. Until

disturbed areas can be stabilized, appropriate sediment control measures will be maintained to minimize sediment delivery off-site. Measures should include as a minimum:

- Sediment Barriers – Placed along toes of slopes (see Sediment Barrier practice).
- Sediment Basins – Divert sediment laden runoff to basins as needed to minimize off-site sedimentation (see Sediment Basin practice).
- Inlet Protection – Where sediment-laden runoff is diverted to on-site stormwater drain inlets, the inlets should be protected with an appropriate sediment control practice.
- Stabilized Outlets – All runoff from the site should be conveyed in stabilized channels (see Grassed Swale, Lined Swale, Rip-rap Lined Swale, or other appropriate channel stabilization).

C. Permanent Seeding (PS)

Permanent Seeding (PS)

Practice Description

Permanent seeding is the establishment of perennial vegetation on disturbed areas from seed. Permanent vegetation provides economical long-term erosion control and helps prevent sediment from leaving the site. This practice is used when vegetation is desired and appropriate to permanently stabilize the soil.

Planning Considerations

The advantages of seeding over other means of establishing plants include the smaller initial cost, lower labor input, and greater flexibility of method.

Disadvantages of seeding include potential for erosion during the establishment stage, seasonal limitations on suitable seeding dates, and weather-related problems such as droughts.

The probability of successful plant establishment can be maximized through good planning. The selection of plants for permanent vegetation must be site specific. Factors that should be considered are type of soils, climate, establishment rate, and management requirements of the vegetation. Other factors that may be important are wear, mowing tolerance, and salt tolerance of vegetation.

Plant selection for permanent vegetation should be based on plant characteristics, site and soil conditions, time of year of planting, method of planting, and the intended use of the vegetated area. Climate factors can vary widely in Alabama.

Important plant attributes are discussed in Vegetation Establishment for Erosion and Sediment Control in Chapter 2.

Plant selection may include companion plants to provide quick cover on difficult sites, late seedings, or where the desired permanent cover may be slow to establish. Annuals are usually used for companion plants and should be selected carefully to prevent using a species that provide so much competition that it prevents the establishment of the desired species.

Seeding properly carried out within the optimum dates has a higher probability of success. It is also possible to have satisfactory establishment when seeding outside these dates. However, as plantings are deviated from the optimum dates, the probability of failure increases rapidly. Seeding dates should be taken into account in scheduling land-disturbing activities.

Site quality impacts both short-term and long-term plant success. Sites that have compacted soils, soils that are shallow to rock or have textures that are too clayey or too sandy should be modified whenever practical to improve the potential for plant growth and long-term cover success.

The operation of equipment is restricted on slopes steeper than 3:1, severely limiting the quality of the seedbed that can be prepared. Provisions for establishment of vegetation on steep slopes can be made during final grading. In construction of fill slopes, for example, the last 4-6” might not be compacted. A loose, rough seedbed with irregularities that hold seeds and lime and fertilizer is essential for hydroseeding. Cut slopes should be roughened (see Land Grading practice).

Proper mulching is critical to protect against erosion on steep slopes. When using straw, anchor with netting or asphalt. On slopes steeper than 2:1, jute, excelsior, or synthetic matting may be required.

The use of irrigation (temporary or permanent) will greatly improve the success of vegetation establishment.

Design Criteria

Plant Selection

Select plants that can be expected to meet planting objectives. To simplify plant selection, use Figure PS-1 Geographical Areas for Species Adaptation and Seeding Dates and Table PS-1, Commonly Used Plants for Permanent Cover. Mixtures commonly specified by the Alabama Department of Transportation are an appropriate alternative for plantings on rights-of-ways. Additional information related to plants commonly used in Alabama is found in Chapter 2 under the section Vegetation for Erosion and Sediment Control.

The plants used for temporary vegetation may be used for companion plants provided the seeding rate of the annual species is reduced by one half. See the Temporary Seeding practice for additional information on establishing temporary

vegetation. **Ryegrass or other highly competitive plants should not be used as a companion plant**.

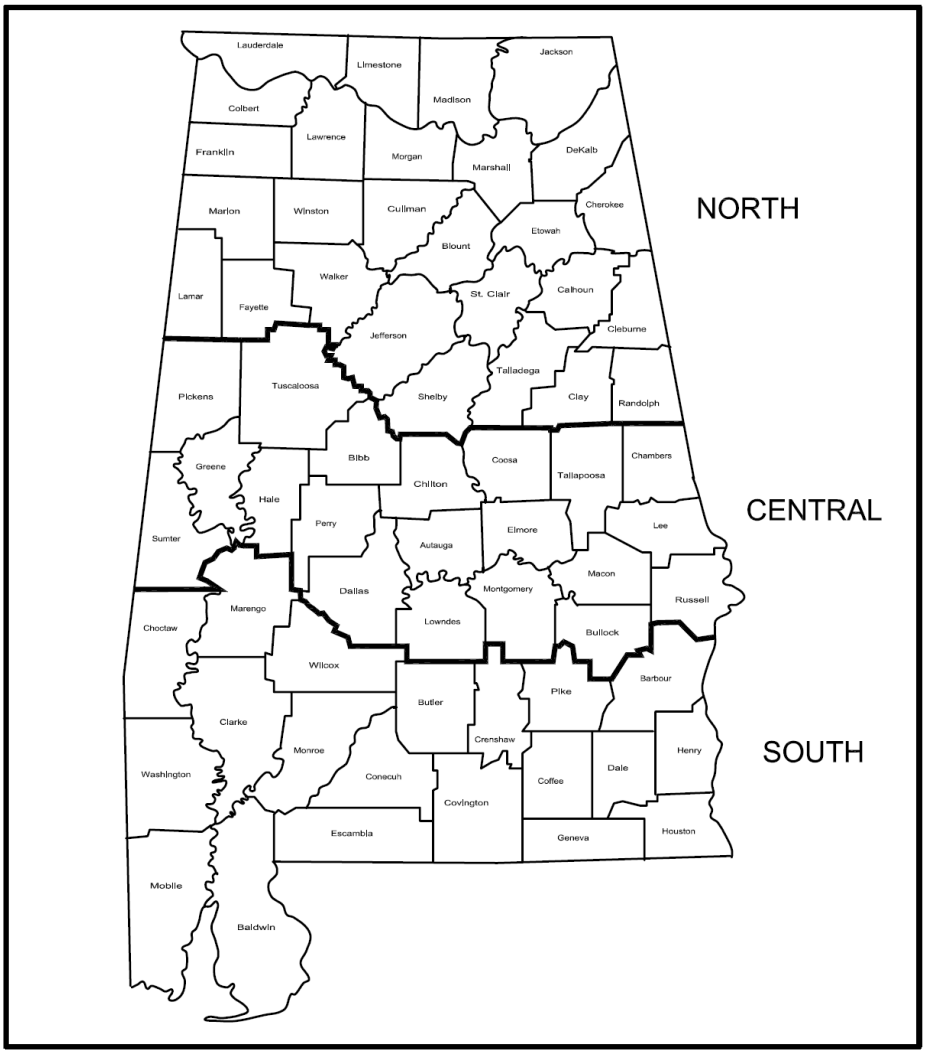

Figure PS-1 Geographical Areas for Species Adaptation and Seeding Dates

Note: Site conditions related to soils and aspect in counties adjacent to or close to county boundaries may justify adjustments in planting dates by qualified design professionals.

Table PS-1 Commonly Used Plants for Permanent Cover with Seeding Rates and Dates

Species	Seeding Rates/Ac PLS	North	Central	South
			Seeding Dates	
Bahiagrass, Pensacola	40 lbs	--	Mar 1-July 1	Feb 1-Nov 1
Bermudagrass, Common	10 lbs	Apr 1-July 1	Mar 15-July 15	Mar 1-July 15
Bahiagrass, Pensacola Bermudagrass, Common	30 lbs 5 lbs	--	Mar 1-July 1	Mar 1-July 15
Bermudagrass, Hybrid (Lawn Types)	Solid Sod	Anytime	Anytime	Anytime
Bermudagrass, Hybrid (Lawn Types)	Sprigs 1/sq ft	Mar 1-Aug 1	Mar 1-Aug 1	Feb 15-Sep 1
Fescue, Tall	40-50 lbs	Sep 1-Nov 1	Sep 1-Nov 1	--
Sericea	40-60 lbs	Mar 15-July 15	Mar 1-July 15	Feb 15-July 15
Sericea & Common Bermudagrass	40lbs 10 lbs	Mar 15-July 15	Mar 1-July 15	Feb 15-July 15
Switchgrass, Alamo	4 Lbs	Apr 1-Jun 15	Mar 15-Jun 15	Mar 15-Jun15

PLS means pure live seed and is used to adjust seeding rates. For example, to plant 10 lbs PLS of a species with germination of 80% and purity of 90%, PLS= 0.8X 0.9 = 72%. 10 lbs PLS = 10/0.72 = 13.9 lbs of the species to be planted.

Seedbed Requirements

Establishment of vegetation should not be attempted on sites that are unsuitable due to compaction or inappropriate soil texture, poor drainage, concentrated overland flow, or steepness of slope until measures have been completed to correct these problems. To maintain a good stand of vegetation, the soil must meet certain minimum requirements as a growth medium. A good growth medium should have these attributes:

- Sufficient pore space to permit root penetration.
- Enough fine-grained soil material (silt and clay) to maintain adequate moisture and nutrient supply.
- Sufficient depth of soil to provide an adequate root zone. The depth to rock or impermeable layers such as hardpans should be 12” or more, except on slopes steeper than 2:1 where topsoiling is not feasible.
- A favorable pH range for plant growth, usually 6.0-6.5.

- Sufficient nutrients (nitrogen, phosphorus and potassium) for initial plant establishment.

- Freedom from large roots, branches, stones, or large clods. Clods and stones may be left on slopes steeper than 3:1 if they are to be hydroseeded.

If any of the above attributes are not met: i.e., if the existing soil is too dense, coarse, shallow or acidic to foster vegetation – chiseling, topsoil, or special amendments should be used to improve soil conditions. The soil conditioners described below may be beneficial or topsoil may be applied (for guidance on topsoiling see Topsoiling practice). These amendments should only be necessary where soils have limitations that make them poor for plant growth or for turf establishment.

- Peat-appropriate types are sphagnum moss peat, reed-sedge peat, or peat humus, all from fresh-water sources. Peat should be shredded and conditioned in storage piles for at least 6 months after excavation.

- Sand-should be clean and free of toxic materials.

- Vermiculite-use horticultural grade.

- Rotted manure-use stable or cattle manure not containing undue amounts of straw or other bedding materials.

- Thoroughly rotted sawdust-should be free of stones and debris. Add 6 lbs of nitrogen to each cubic yard.

Soil Amendments

Liming Materials

Lime (Agricultural limestone) should have a neutralizing value of not less than 90 percent calcium carbonate equivalent and 90 percent will pass through a 10 mesh sieve and 50 percent will pass through a 60 mesh sieve.

Selma chalk should have a neutralizing value of not less than 80 percent calcium carbonate equivalent and 90 percent will pass through a 10 mesh sieve.

Other liming materials that may be selected should be provided in amounts that provide equal value to the criteria listed for agricultural lime or be used in combination with agricultural limestone or Selma chalk to provide equivalent values to agricultural limestone.

Plant Nutrients

Commercial grade fertilizers that comply with current Alabama Fertilizer Laws should be used to supply nutrients required to establish vegetation.

Lime and fertilizer needs should be determined by soil tests. Soil testing is performed by the Auburn University Soil Testing Laboratory and provides recommendations based on field tests on Alabama soils. The local county Cooperative Extension Service can provide information on obtaining soil tests. Commercial laboratories that make recommendations based on soil analysis may be used.

When soil tests are not available, use the following rates for application of soil amendments.

Sandy soils: Use 1 ton/acre (exception on sandy soils – if the cover will be tall fescue and clover) use 2 tons/acre.
Clayey soils: 2 tons/acre.
(Do not apply lime to alkaline soils).

Grasses alone: Use 400 lbs/acre of 8-24-24 or the equivalent. Apply 30 lbs of additional nitrogen when grass has emerged and begun growth (approximately 0.8lbs/1000 ft^2).
Grass-legume mixtures: Use 800 to 1200 lbs/acre of 5-10-10 or the equivalent.
Legumes Alone: Use 400 to 600 lbs/acre of 0-20-20 or the equivalent.

Note: Fertilizer can be blended to meet exact fertilizer recommendations. Take soil test recommendations to local fertilizer dealer for bulk fertilizer blends. This may be more economical than bagged fertilizer.

Application of Soil Amendments

Apply lime and fertilizer evenly and incorporate into the top 6” of soil by disking, chiseling or other suitable means during seedbed preparation. Operate machinery on the contour. On sites too steep for seedbed preparation, fertilizer and lime can be applied with a hydroseeder.

Seedbed Preparation

If needed, grade and shape to provide a surface on which equipment can safely and efficiently be used for seedbed preparation and seeding.

Install necessary sediment control practices before seedbed preparation and complete grading according to the approved plan.

Prepare a friable seedbed with tillage to a depth of at least 6”. Break up large clods, alleviate compaction, and smooth and firm the soil into a uniform surface. Fill in or level depressions that can collect water.

Planting Methods

Seeding

Use certified seed for permanent seeding whenever possible. Certified seed is inspected by the Alabama Crop Improvement Association to meet high quality standards and will be tagged with a “Certified Seed” tag. (Note: all seed sold in

Alabama is required by law to be tagged to identify seed purity, germination, and presence of weed seeds. Seed must meet state standards for content of noxious weeds.)

Seeding dates are determined using Figure PS-1 and Table PS-1.

Inoculate legume seed with the Rhizobium bacteria appropriate to the species of legume. Details of legume inoculation are located in Chapter 2 in the part on Vegetation for Erosion and Sediment Control under Inoculation of Legumes.

Plant seed uniformly with a cyclone seeder, a drill seeder, a cultipacker seeder, or by hand on a fresh, firm, friable seedbed. If the seedbed has been sealed by rainfall, it should be disked so the seed will be sown into a freshly prepared seedbed.

When using broadcast-seeding methods, subdivide the area into workable sections and determine the amount of seed needed for each section. Apply one-half the seed while moving back and forth across the area, making a uniform pattern; then apply the second half in the same way, but moving at right angles to the first pass.

Cover broadcast seed by raking or chain dragging; then firm the surface with a roller or cultipacker to provide good seed contact. Small grains should be planted no more than 1” deep and grasses and legume seed no more than ½” deep.

Hydroseeding

Surface roughening is particularly important when hydroseeding, as a roughened slope will provide some natural coverage for lime, fertilizer, and seed. The surface should not be compacted or smooth. Fine seedbed preparation is not necessary for hydroseeding operations; large clods, stones, and irregularities provide cavities in which seeds can lodge.

Mix seed, inoculant if required, and a seed carrier with water and apply as a slurry uniformly over the area to be treated. The seed carrier should be a cellulose fiber, natural wood fiber or other approved fiber mulch material which is dyed an appropriate color to facilitate uniform application of seed. Use the correct legume inoculant at 4 times the recommended rate when adding inoculant to a hydroseeder slurry. The mixture should be applied within one hour after mixing to reduce damage to seed.

Fertilizer should not be mixed with the seed-inoculant mixture because fertilizer salts may damage seed and reduce germination and seedling vigor.

Fertilizer may be applied with a hydroseeder as a separate operation after seedlings are established.

Lime is not normally applied with a hydraulic seeder because it is abrasive but if necessary it can be added to the seed slurry and applied at seeding or it may be applied with the fertilizer mixture. Also lime can be blown onto steeper slopes in dry form.

Sprigging

Hybrid bermudagrass cannot be grown from seed and must be planted vegetatively. Vegetative methods of establishing common and hybrid bermudagrass, centipedegrass and zoysia include sodding, plugging and sprigging (see Sodding practice).

When sprigs are planted with a sprigging machine, furrows should be 4-6" deep and 2 feet apart. Place sprigs no farther than 2 feet apart in the row and so that at least one rooting node is in the furrow.

When broadcasting is used for sprig planting, broadcast sprigs at the specified rate (Table PS-1). Press into the top ½" to 2" of soil with a cultipacker or with a disk set nearly straight so that the sprigs are not brought back to the surface. A mulch tacking machine may be used to press sprigs into the soil.

Mulching

The use of mulch provides instant cover and helps ensure establishment of vegetation under normal conditions and is essential to seeding success under harsh site conditions (see Mulching practice). Harsh site conditions include: slopes steeper than 3:1 and adverse soils (shallow, rocky, or high in clay or sand). Areas with concentrated flow should be treated differently and require sod, a hydromulch formulated for channels or an appropriate erosion control blanket.

Irrigation

Moisture is essential for seed germination and vegetation establishment. Supplemental irrigation can be very helpful in assuring adequate stands in dry seasons or to speed development of full cover. It is a requirement for establishment of vegetation from sod and sprigs and should be used elsewhere when feasible. However, irrigation is rarely critical for low-maintenance vegetation planted at the appropriate time of the year.

Water application rates must be carefully controlled to prevent runoff. Inadequate or excessive amounts of water can be more harmful than no supplemental water.

Maintenance

Generally, a stand of vegetation cannot be determined to be fully established until soil cover has been maintained for 1 full year from planting. Inspect vegetated areas for failure and make necessary repairs and vegetate as soon as possible.

If a stand has inadequate cover, reevaluate choice of plant materials and quantities of lime and fertilizer. Re-establish the stand after seedbed preparation or over-seed the stand. Consider a temporary seeding if the time of year is not appropriate for establishment of permanent vegetation (see Temporary Seeding practice).

If vegetation fails to grow, a soil test should be made to determine if soil acidity or nutrient imbalance is responsible.

To attain complete establishment, fertilization is usually required in the second growing season. Turf grasses require annual maintenance fertilization. Use soil tests if possible or follow the guidelines given for the specific seeding mixtures.

Protect vegetation during its establishing period from traffic that will be harmful. If appropriate, use either temporary fences or barriers to protect areas that may be damaged by excessive traffic.

This Page Intentionally Left Blank

D. Temporary Seeding (TS)

Temporary Seeding (TS)

Practice Description

Temporary seeding is the establishment of fast-growing annual vegetation from seed on disturbed areas. Temporary vegetation provides economical erosion control for up to a year and reduces the amount of sediment moving off the site.

This practice applies where short-lived vegetation can be established before final grading or in a season not suitable for planting the desired permanent species. It helps prevent costly maintenance operations on other practices such as sediment basins and sediment barriers. In addition, it reduces problems of mud and dust production from bare soil surfaces during construction. Temporary or permanent seeding is necessary to protect earthen structures such as dikes, diversions, grass-lined channels and the banks and dams of sediment basins.

Planning Considerations

Temporary vegetative cover can provide significant short-term erosion and sediment reduction before establishing perennial vegetation.

Temporary vegetation will reduce the amount of maintenance associated with sediment basins.

Temporary vegetation is used to provide cover for no more than 1 year. Permanent vegetation should be established at the proper planting time for permanent vegetative cover.

Certain plants species used for temporary vegetation will produce large quantities of residue which can provide mulch for establishment of the permanent vegetation.

Proper seedbed preparation and selection of appropriate species are important with this practice. Failure to follow establishment guidelines and recommendations carefully may result in an inadequate or short-lived stand of vegetation that will not control erosion.

The selection of plants for temporary vegetation must be site specific. Factors that should be considered are type of soils, climate, establishment rate, and management requirements of the vegetation. Other factors that may be important are wear, mowing tolerance, and salt tolerance of vegetation.

Seeding properly carried out within the optimum dates has a higher probability of success. It is also possible to have satisfactory establishment when seeding outside these dates. However, as plantings are deviated from the optimum dates, the probability of failure increases rapidly. Seeding dates should be taken into account in scheduling land-disturbing activities.

Site quality impacts both short-term and long-term plant success. Sites that have compacted soils should be modified whenever practical to improve the potential for plant growth.

The operation of equipment is restricted on slopes steeper than 3:1, severely limiting the quality of the seedbed that can be prepared. Provisions for establishment of vegetation on steep slopes can be made during final grading. In construction of fill slopes, for example, the last 4-6” might not be compacted. A loose, rough seedbed with irregularities that hold seeds and fertilizer is essential for hydroseeding. Cut slopes should be roughened (see practice Land Grading).

Good mulching practices are critical to protect against erosion on steep slopes. When using straw, anchor with netting or asphalt. On slopes steeper than 2:1, either hydraulic mulch or erosion control blanket is more appropriate than straw to protect the slope.

The use of irrigation (temporary or permanent) will greatly improve the success of vegetation establishment.

Design Criteria

Plant Selection

Select plants that can be expected to meet planting objectives. To simplify plant selection, use Table TS-1, Commonly Used Plants for Temporary Cover and Figure TS-1, Geographical Areas for Species Adaptation and Seeding Dates. Seeding mixtures commonly specified by the Alabama Department of Transportation are an

appropriate alternative for plantings on rights-of-ways. Additional information related to plantings in Alabama is found in Chapter 2 in the section Non-woody Vegetation for Erosion and Sediment Control.

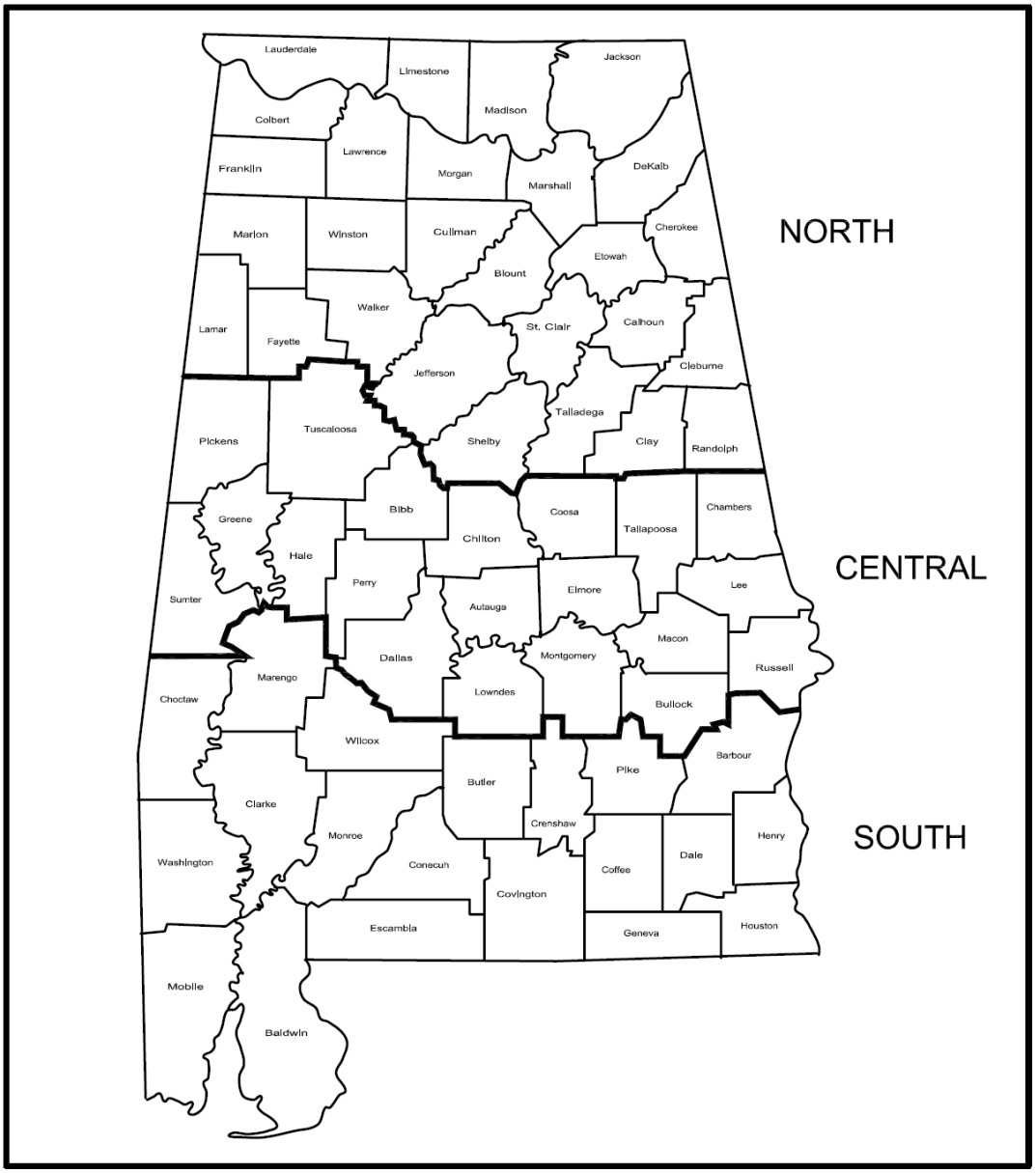

Figure TS-1 Geographical Areas for Species Adaptation and Seeding Dates

Note: Site conditions related to soils and aspect in counties adjacent to or close to county boundaries may justify adjustments in planting dates by qualified design professionals.

Table TS-I Commonly Used Plants for Temporary Cover

Species	Seeding Rate/AC PLS	North	Central	South
			Seeding Dates	
Millet, Browntop or German	40 lbs	Apr1-Aug 1	Apr1- Aug 15	Apr 1-Aug 15
Rye	3 bu	Sep I-Nov 15	Sep 15-Nov 15	Sep 15-Nov 15
Ryegrass	30 lbs	Aug I-Sep 15	Sep I-Oct 15	Sep 1-Oct 15
Sorghum-Sudan Hybrids	40 lbs	May I-Aug 1	Apr 15-Aug 1	Apr I-Aug 15
Sudangrass	40 lbs	May I-Aug I	Apr 15-Aug	Apr I-Aug 15
Wheat	3 bu	Sep I-Nov 1	Sep 15-Nov 15	Sep 15-Nov 15
Common Bermudagrass	10 lbs	Apr 1-July 1	Mar 15-July 15	Mar 1-July 15
Crimson Clover	10lbs	Sept 1-Nov 1	Sept 1-Nov 1	Sept 1-Nov 1

PLS means pure live seed and is used to adjust seeding rates. For example, to plant 10 lbs PLS of a species with germination of 80% and purity of 90%, PLS= 0.8X 0.9 = 72%. 10 lbs PLS = 10/0.72 = 13.9 lbs of the species to be planted.

Site Preparation and Soil Amendments

Complete grading and shaping before applying soil amendments if needed to provide a surface on which equipment can safely and efficiently be used to apply soil amendments and accomplish seedbed preparation and seeding.

Lime

Apply lime according to soil test recommendations. If a soil test is not available, use 1 ton of agricultural limestone or equivalent per acre on coarse textured soils and 2 tons per acre on fine textured soils. Do not apply lime to alkaline soils or to areas which have been limed during the preceding 2 years. Other liming materials that may be selected should be provided in amounts that provide equal value to the criteria listed for agricultural lime or be used in combination with agricultural limestone or Selma chalk to provide equivalent values to agricultural limestone.

Fertilizer

Apply fertilizer according to soil test results. If a soil test is not available, apply 8-24-24 fertilizer.

When vegetation has emerged to a stand and is growing, 30 to 40 lbs/acre (approximately 0.8 lbs/1000 ft^2) of additional nitrogen fertilizer should be applied.

Note: Fertilizer can be blended to meet exact fertilizer recommendations. Take soil test recommendations to local fertilizer dealer for bulk fertilizer blends. This may be more economical than bagged fertilizer.

Application of Soil Amendments

Incorporate lime and fertilizer into the top 6” of soil during seedbed preparation.

Seedbed Preparation

Good seedbed preparation is essential to successful plant establishment. A good seedbed is well pulverized, loose, and smooth. If soils become compacted during grading, loosen them to a depth of 6” to 8” using a ripper or chisel plow.

If rainfall has caused the surface to become sealed or crusted, loosen it just prior to seeding by disking, raking, harrowing, or other suitable methods. When hydroseeding methods are used, the surface should be left with a more irregular surface of clods.

Planting Methods

Seeding

Evenly apply seed using a cyclone seeder (broadcast), drill seeder, cultipacker seeder, or hydroseeder. Broadcast seeding and hydroseeding are appropriate for steep slopes where equipment cannot operate safely. Small grains should be planted no more than 1” deep, and grasses and legumes no more than ½” deep. Seed that are broadcast must be covered by raking or chain dragging, and then lightly firmed with a roller or cultipacker.

Hydroseeding

Surface roughening is particularly important when hydroseeding, as a roughened slope will provide some natural coverage for lime, fertilizer, and seed. The surface should not be compacted or smooth. Fine seedbed preparation is not necessary for hydroseeding operations; large clods, stones, and irregularities provide cavities in which seeds can lodge.

Mix seed, inoculant if required, and a seed carrier with water and apply as slurry uniformly over the area to be treated. The seed carrier should be a cellulose fiber, natural wood fiber or other approved fiber mulch material which is dyed an appropriate color to facilitate uniform application of seed. Use the correct legume inoculant at 4 times the recommended rate when adding inoculant to hydroseeder slurry. The mixture should be applied within one hour after mixing to reduce damage to seed.

Fertilizer should not be mixed with the seed-inoculant mixture because fertilizer salts may damage seed and reduce germination and seedling vigor. Fertilizer may be applied with a hydro seeder as a separate operation after seedlings are established.

Mulching

The use of appropriate mulch provides instant cover and helps ensure establishment of vegetative cover under normal conditions and is essential to seeding success

under harsh site conditions (see the Mulching practice for guidance). Harsh site conditions include the following: slopes steeper than 3:1 and adverse soils (soils that are shallow to rock, rocky, or high in clay or sand). Areas with concentrated flow should be treated differently and require a hydromulch formulated for channels or an appropriate erosion control blanket.

E. Check Dam (CD)

Check Dam (CD)

Practice Description

A check dam (also referred to as a "ditch check") is a small barrier or dam constructed across a swale, drainage ditch or other area of concentrated flow for the purpose of reducing channel erosion. Channel erosion is reduced because check dams flatten the gradient of the flow channel and slow the velocity of channel flow. Check dams can be constructed of rock, wattles (sometimes referred to as tubes or rolls), sand bags, or other materials that may be acceptable to the design professional. Contrary to popular opinion, most check dams trap an insignificant volume of sediment, as check dams usually just trap the coarser grained material leaving the turbid water to flow downstream.

This practice applies in small open channels and drainageways, including temporary and permanent swales. Check dams are not to be used in a live stream. Situations of use include areas in need of protection during establishment of grass and areas that cannot receive a temporary or permanent non-erodible lining for an extended period of time.

Planning Considerations

Check dams are utilized in concentrated flow areas to provide temporary channel stabilization during the intense runoff periods associated with construction disturbances. Check dams may be constructed of rock, wattles, sand bags, or other suitable material, including manufactured products. Most check dams are constructed of rock. Rock may not be acceptable in some installations because of

aesthetics and alternative types of check dams need to be considered. Rock check dams (Figures CD-1 and CD-2) are usually installed with backhoes or other suitable equipment but hand labor is likely needed to complete most installations to the quality needed. The rock is usually purchased and some locations in the state may not have rock readily available. The use of rock should be considered carefully in areas to be mowed. Some rock may be washed downstream and should be removed before each mowing operation. The use of small graded aggregate and geotextile can be used on the upstream face of the rock check dam to increase the sediment trapping efficiency of the rock check dam. Measures must be taken to prevent undermining of the check dam.

Water flowing over a check dam is very often super-critical and creates erosive forces on the down slope of the dam and immediately downstream of the dam. Some measures to prevent this erosion include placing larger rock on the downstream face of a rock dam, concrete grouting the downstream face of a rock dam, and providing erosion protection material just downstream of the dam.

Wattles have been found to be best installed without trenching and on top of stapled geotextile that extends up and downstream from the wattle. Wattles must be properly stapled and staked on top of the geotextile (see picture below).

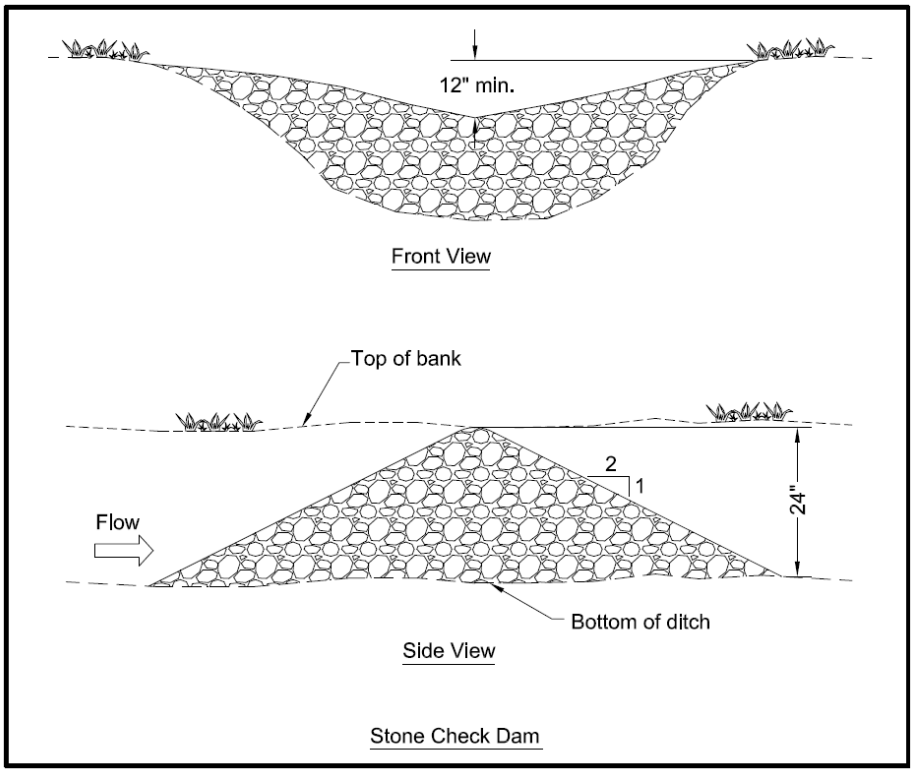

Figure CD-1 Profile and Cross-Section of Typical Rock Check Dams

Check dams should be planned to be compatible with the other features such as streets, walks, trails, sediment basins and rights-of-way or property lines. Check dams are installed with the center overflow area lower in elevation than the ends to ensure flow goes over the check dam and not around. Check dams are normally constructed in series and the dams should be located at a normal interval from other grade controls such as culverts or sediment basins.

The use of check dams are a temporary BMP and should be removed following construction to allow for final long term stabilization.

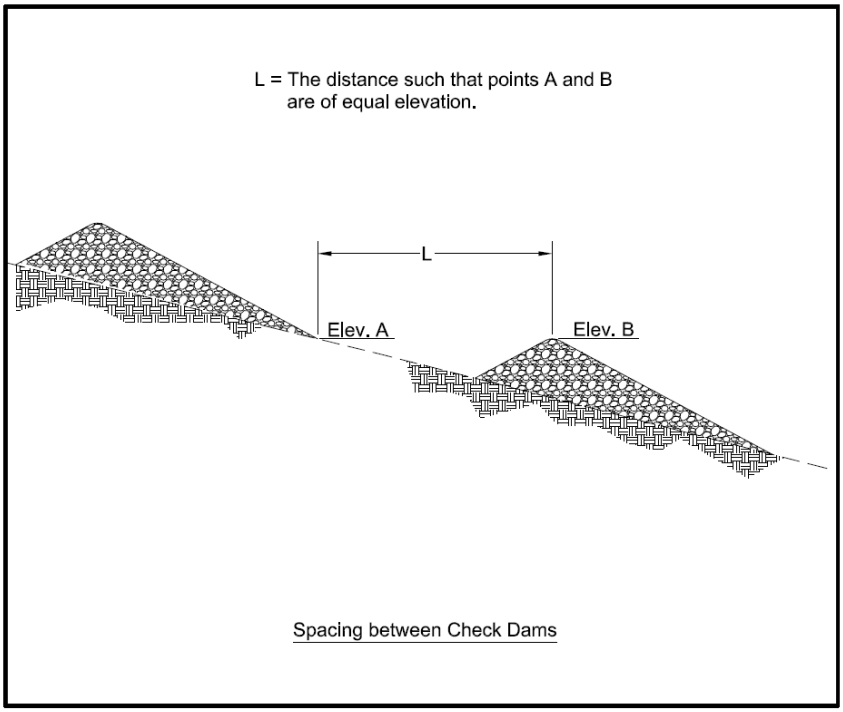

Figure CD-2 Profile of Typical Rock Check Dams

Design Criteria

Formal design is not required. The following limiting factors should be adhered to when designing check dams.

Drainage Area

Ten acres or less.

Maximum Height

Two feet when drainage area is less than 5 acres.

Three feet when drainage area is 5 to 10 acres.

Depth of Flow

Six inches when drainage area is less than 5 acres.

Twelve inches when drainage area is 5 to 10 acres.

The top of dam, perpendicular to flow, should be parabolic. The center of the dam should be constructed lower than the ends. The elevation of the center of the dam should be lower than the ends by the depth of flow listed above.

Side Slopes

2:1 or flatter.

Spacing

The elevation of the toe of the upstream dam should be at or below the elevation of crest of the downstream dam (Figure CD-2).

For example, if the channel is 3% grade, and the drainage area is 3 acres:

The check dam height would be 2 feet.

The check dam spacing should be 67 feet:

Spacing (ft) = dam height (ft) / channel grade

Spacing = 2 ft / 0.03 = 67 feet

Keyway

Measures should be taken to ensure the flow does not cause erosion underneath the check dam. This is often accomplished using geotextile underneath the check dam or in highly erosive soils a keyway lined with geotextile and filled with rock. Keyways if used should be keyed into the channel bottom and abutments to a depth of 12 to 24”. The keyway width should be at least 12”.

Rock Check Dams

Rock check dams should be constructed of appropriately sized durable rock riprap. Riprap gradation should conform to the requirements of Alabama Highway Department, Standard Specification for Highway Construction.

In soils where failure by piping of soils into the rock is likely, a non-woven geotextile will be used as a filter to separate the soils from the rock. The geotextile shall be of the strength and durability required for the project to ensure the rock and soil base are stable. Generally, the non-woven geotextile should meet the requirements found in ASSHTO M288.

This Page Intentionally Left Blank

F. Diversion (DV)

Diversion (DV)

Practice Description

A diversion is a watercourse constructed across a slope consisting of an excavated channel, a compacted ridge or a combination of both. Most diversions are constructed by excavating a channel and using the excavated material to construct a ridge on the downslope side of the channel. Right-of-way diversions and temporary diversions are sometimes constructed by making a ridge, often called a berm, from fill material.

This practice applies to sites where stormwater runoff can be redirected to permanently protect structures or areas downslope from erosion, sediment, and excessive wetness or localized flooding. Diversions may be used to temporarily divert stormwater runoff to protect disturbed areas and slopes or to retain sediment on-site during construction.

Perimeter protection is sometimes used to describe both permanent and temporary diversions used at either the upslope or downslope side of a construction area.

Right-of-way diversions, sometimes referred to as water bars, are used to shorten the flow length on a sloping right-of-way and reduce the erosion potential of the stormwater runoff.

Planning Considerations

Diversions are designed to intercept and carry excess water to a stable outlet.

Diversions can be useful tools for managing surface water flows and preventing soil erosion. On moderately sloping areas, they may be placed at intervals to trap and divert sheet flow before it has a chance to concentrate and cause rill and gully erosion.

Diversions may be placed at the top of cut or fill slopes to keep runoff from upgradient drainage areas off the slope. The following picture illustrates the placement of a diversion near the top of the slope. Diversions are sometimes built at the base of steeper slopes to protect flatter developed areas which cannot withstand runoff water from outside areas. Also, they can be used to protect structures, parking lots, adjacent properties, and other special areas from flooding.

Diversion near the top of a slope

Diversions are preferable to other types of man-made stormwater conveyance systems because they more closely simulate natural flow patterns and characteristics. Flow velocities are generally kept to a minimum. When properly coordinated into the landscape design of a site, diversions can he visually pleasing as well as functional.

As with any earthen structure, it is very important to establish adequate vegetation as soon as possible after installation. It is usually important to stabilize the drainage area above the diversion so that sediment will not enter and accumulate in the diversion channel.

Design Criteria

Location

Diversion location should be determined by considering outlet conditions, topography, land use, soil type, length of slope, seepage (where seepage is a problem) and the development layout. Outlets must be stable after the diversion empties stormwater flow into it; therefore, care should be exercised in selecting the location of the diversion and its outlet.

Capacity

The diversion channel must have a minimum capacity to carry the runoff expected from a storm frequency meeting the requirements of Table DV-l with a freeboard of at least 0.3 foot (Figure DV-1).

The storm frequency should be used to determine the required channel capacity, Q (peak rate of runoff). The peak rate of runoff should be determined using the Natural Resources Conservation Service runoff curve no. (RCN) method or other equivalent methods.

Table DV-1 Design Frequency

Diversion Type	Typical Area of Protection	24-Hour Design Storm Frequency
Temporary	Construction Areas	2-year
	Building Sites	5-year
Permanent	Agricultural Land	10-year
	Mined Reclamation Area	10-year
	Recreation Areas	10-year
	Isolated Buildings	25-year
	Urban areas, Residential, School, Industrial Areas, etc.	50-year

Diversions designed to protect homes, schools, industrial buildings, roads, parking lots, and comparable high-risk areas, and those designed to function in connection with other structures, should have sufficient capacity to carry peak runoff expected from a storm frequency consistent with the hazard involved.

Velocities

Diversions should be designed so that the design velocities will be safe for the planned type of protective vegetation and the expected maintenance,-Maximum permissible velocities are dependent upon the erosion resistance of the soil (Table DV-2) and the quality of the vegetation maintained.

Table DV-2 Permissible Velocities

Soil Texture	Velocity in Feet/Second		
	Conditions of Vegetation		
	Poor	Fair	Good
Sand, Silt, Sandy Loam, Silt Loam	1.5	2.0	3.0
Silty Clay Loam, Sandy Clay Loam	2.5	3.0	4.0
Clay	3.0	4.0	5.0

Channel Design

The diversion channel may be parabolic, trapezoidal or v-shaped as shown in Figure DV-1 and should be designed in accordance with the procedure provided in the Diversion Design section. Land slope must be considered when choosing channel dimensions. On steeper slopes, narrow and deep channels may be required. On more gentle slopes, broad, shallow channels can be used to facilitate maintenance.

Ridge Design

The supporting ridge cross section should meet the configuration and requirements of Figure DV-1.

The side slopes should be no steeper than 2:1. Side slopes should be flatter, 5:1 to 10:1, when the diversion is to be permanent with mowing and other maintenance activities performed on or around it.

The width of the ridge at the design water elevation should be a minimum of 4 feet.

The minimum freeboard should be 0.3 foot.

The design should include a 10% settlement factor.

Outlet

Diversions should have adequate outlets which will convey concentrated runoff without erosion. Acceptable outlets include practices such as Grassed Swale, Lined Swale, Drop Structure, Sediment Basin, and Stormwater Detention Basins.

Stabilization

Unless otherwise stabilized, the ridge and channel should be seeded within 13 days of installation in accordance with the applicable seeding practice, Permanent Seeding or Temporary Seeding.

Disturbed areas draining into the diversion should be seeded and mulched prior to or at the time the diversion is constructed in accordance with the Permanent Seeding or Temporary Seeding (whichever is applicable) practices.

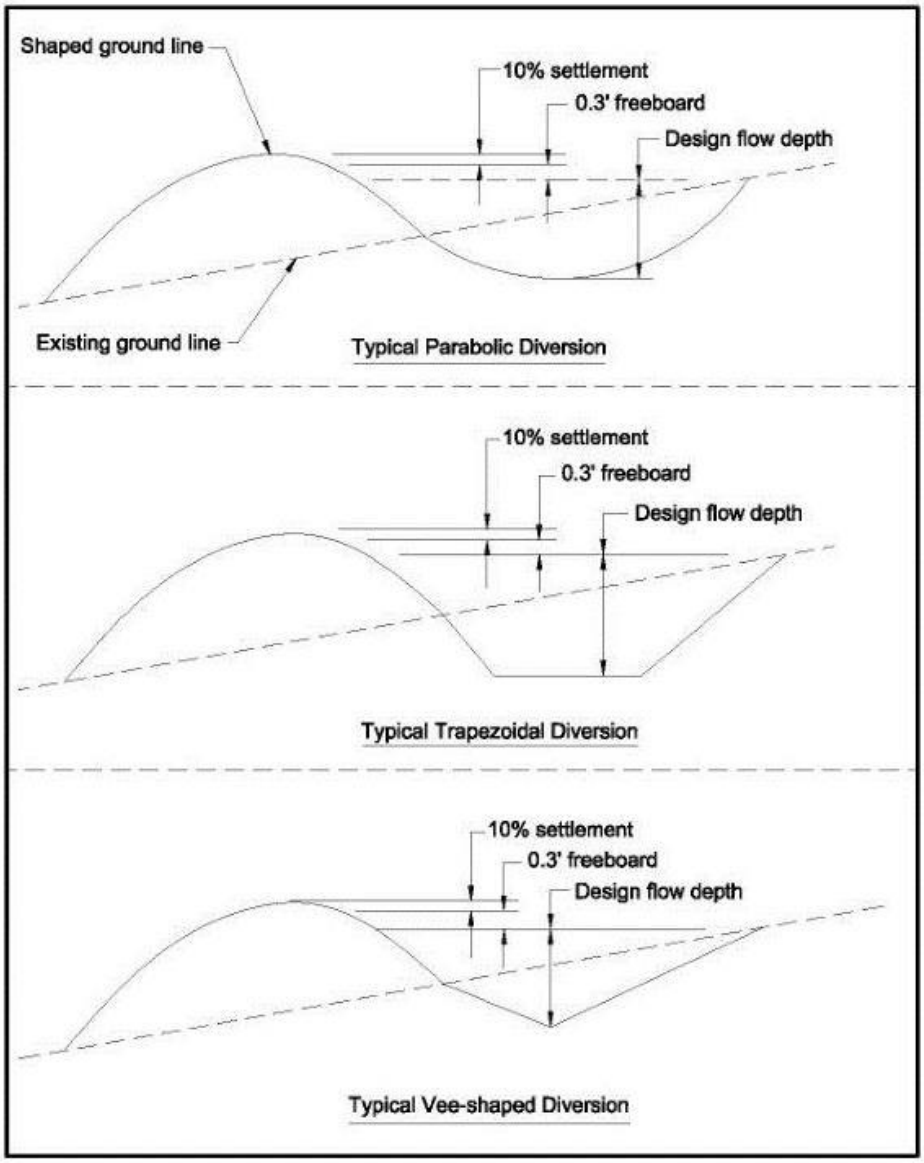

Figure DV-1 Typical Diversions Detail

Diversion Design

Note: This design example uses the Permissible Velocity approach. Diversion design using the Tractive Stress approach can also be used but is not discussed in this document.

Table DV-l through DV-16 may be used to facilitate the design of grass-lined diversions with parabolic cross sections. These tables are based on a retardance of "D" (vegetation newly cut) to determine V1 for stability considerations. To determine channel capacity, choose a retardance of "C" when proper maintenance is expected; otherwise, design channel capacity based on retardance "B". Refer to Table DV-2 for maximum permissible velocities. The permissible velocities guide the selection of V1 and should not be exceeded. It is good practice to use a value for V1 that is significantly less than the maximum allowable when choosing a design cross section. When velocities approach the maximum allowable, flatter grades should be evaluated or a more erosion resistant liner such as erosion control blanket or riprap should be considered. After the diversion dimensions are selected in the design tables, the top width should be increased by 4 feet. and the depth by 0.3 foot. for freeboard.

Example Problem

Given

Q: 30 cfs
Grade: 1%
Soil: Sandy clay loam
Condition of vegetation expected: fair
Maintenance: low; will be cut only twice a year.
Site will allow a top width of 26 feet.

Find

Diversion top width and depth that will be stable and fit site conditions.

Solution

From Table DV-2 use maximum permissible velocity of 3.0 ft./sec.

Since maintenance will be low use "B" retardance for capacity.

From Table DV-4 use retardance "D" and "B";
Grade 1.00 Percent Top width = 21.0 feet + 4 feet = 25.0 feet.

Depth = 1.6 feet + 0.3 foot = 1.9 feet.

V_2 = 1.3 ft./sec.

Note: V_1 < 3.0 ft./sec.; Top width < 26 feet, design O.K.

Note: It is good practice to select a cross section that will give a velocity, V_1, well below the maximum allowable whenever site conditions permit. Wide, shallow cross sections are more stable and require less maintenance. It is always prudent to evaluate flatter design grades in order to best fit diversions to the site and keep velocities well below maximum allowable.

Table DV-3 Parabolic Diversion Design Chart (Retardance "D" and "B", Grade 0.50%)

V1 FOR RETARDANCE "D", TOP WIDTH (T), DEPTH (D), AND V2 FOR RETARDANCE "B"

Grade 0.50 Percent

Q CFS	V1=2.0			V1=2.5			V1=3.0			V1=3.5			V1=4.0			V1=4.5			V1=5.0			V1=5.5			V1=6.0		
	T	D	V2	T	D	V2	T	D	V2	T	D	V2	T	D	V2	T	D	V2	T	D	V2	T	D	V2	T	D	V2
5																											
10																											
15	10.0	2.2	1.0																								
20	13.7	2.1	1.0	8.4	2.7	1.3																					
25	17.4	2.1	1.0	11.3	2.4	1.4																					
30	21.0	2.0	1.0	13.9	2.3	1.4																					
35	24.6	2.0	1.1	16.4	2.3	1.4	10.7	2.8	1.8																		
40	28.5	2.0	1.0	18.9	2.3	1.4	12.6	2.7	1.8																		
45	31.9	2.0	1.1	21.4	2.3	1.4	14.4	2.6	1.8																		
50	35.5	2.0	1.1	23.9	2.2	1.4	16.2	2.5	1.8	9.9	3.4	2.2															
55	39.0	2.0	1.1	26.3	2.2	1.4	17.9	2.5	1.8	11.9	3.1	2.3															
60	42.5	2.0	1.1	28.8	2.2	1.4	19.7	2.5	1.8	13.2	3.0	2.3															
65	46.1	2.0	1.1	31.6	2.2	1.4	21.4	2.5	1.8	14.5	2.9	2.3															
70	49.6	2.0	1.1	34.0	2.2	1.4	23.1	2.5	1.8	15.8	2.9	2.3	11.0	3.6	2.6												
75	53.1	2.0	1.1	36.4	2.2	1.4	24.9	2.5	1.8	17.1	2.8	2.3	12.7	3.4	2.7												
80	56.6	2.0	1.1	38.8	2.2	1.4	26.6	2.5	1.8	18.4	2.8	2.3	13.7	3.3	2.7												
85	60.2	2.0	1.1	41.2	2.2	1.4	28.3	2.5	1.8	19.7	2.8	2.3	14.8	3.2	2.7												
90	63.7	2.0	1.1	43.6	2.2	1.4	30.0	2.4	1.8	20.9	2.8	2.3	15.9	3.2	2.7												
95	67.2	2.0	1.1	46.1	2.2	1.4	31.7	2.4	1.8	22.1	2.8	2.3	16.9	3.1	2.7												
100	70.8	2.0	1.1	48.5	2.2	1.4	33.7	2.4	1.8	23.4	2.8	2.3	17.9	3.1	2.7	12.3	3.9	3.1									
105	74.3	2.0	1.1	50.9	2.2	1.4	35.4	2.4	1.8	24.5	2.7	2.4	18.9	3.1	2.7	13.7	3.7	3.1									
110	77.8	2.0	1.1	53.3	2.2	1.4	37.1	2.4	1.8	25.8	2.7	2.4	19.9	3.1	2.7	14.6	3.6	3.1									
115	81.4	2.0	1.1	55.7	2.2	1.4	38.7	2.4	1.8	27.0	2.7	2.4	20.8	3.0	2.7	15.4	3.6	3.1									
120	84.9	2.0	1.1	58.1	2.2	1.4	40.4	2.4	1.9	28.2	2.7	2.4	21.8	3.0	2.7	16.3	3.5	3.1									
125	88.4	2.0	1.1	60.6	2.2	1.4	42.1	2.4	1.9	29.4	2.7	2.4	22.8	3.0	2.7	17.1	3.5	3.1									
130	92.0	2.0	1.1	63.0	2.2	1.4	43.8	2.4	1.9	30.6	2.7	2.4	23.8	3.0	2.7	17.9	3.5	3.1									
135	95.5	2.0	1.1	65.4	2.2	1.4	45.4	2.4	1.9	31.8	2.7	2.4	24.8	3.0	2.7	18.7	3.4	3.2									
140	99.0	2.0	1.1	67.8	2.2	1.4	47.1	2.4	1.9	33.1	2.7	2.4	25.7	3.0	2.8	19.4	3.4	3.2									
145	102.6	2.0	1.1	70.2	2.2	1.4	48.8	2.4	1.9	34.3	2.7	2.4	26.7	3.0	2.8	20.2	3.4	3.2	13.5	4.4	3.6						
150	106.1	2.0	1.1	72.6	2.2	1.4	50.5	2.4	1.9	35.5	2.7	2.4	27.7	3.0	2.8	21.0	3.4	3.2	14.4	4.3	3.6						

RETARDANCE "D" AND "B"

NOTE: Width and Depth dimensions are in feet; Velocity measurements are in feet per second; Depth "D" does not include allowance for freeboard or settlement.

Table DV-4 Parabolic Diversion Design Chart (Retardance "D" and "B", Grade 1.00%)

V1 FOR RETARDANCE "D", TOP WIDTH (T), DEPTH (D), AND V2 FOR RETARDANCE "B"

Grade 1.00 Percent

Q CFS	V1=2.0			V1=2.5			V1=3.0			V1=3.5			V1=4.0			V1=4.5			V1=5.0			V1=5.5			V1=6.0		
	T	D	V2	T	D	V2	T	D	V2	T	D	V2	T	D	V2	T	D	V2	T	D	V2	T	D	V2	T	D	V2
5																											
10	9.7	1.6	1.0	6.2	2.0	1.2																					
15	14.8	1.5	1.0	10.2	1.7	1.3	6.5	2.2	1.5																		
20	20.2	1.5	1.0	13.8	1.7	1.3	9.6	1.9	1.6																		
25	25.1	1.5	1.0	17.4	1.7	1.3	12.2	1.9	1.6	8.5	2.2	2.0															
30	30.1	1.5	1.0	21.0	1.6	1.3	14.9	1.8	1.7	10.6	2.1	2.1															
35	35.1	1.5	1.0	24.7	1.6	1.3	17.5	1.8	1.7	12.6	2.0	2.1	8.9	2.4	2.5												
40	40.1	1.5	1.0	28.2	1.6	1.3	20.0	1.8	1.7	14.5	2.0	2.1	10.5	2.3	2.5												
45	45.1	1.5	1.0	31.7	1.6	1.3	22.5	1.8	1.7	16.4	2.0	2.1	12.1	2.2	2.5	8.2	2.8	2.9									
50	50.2	1.5	1.0	35.2	1.6	1.3	25.4	1.8	1.7	18.3	2.0	2.1	13.6	2.2	2.5	10.0	2.6	2.9									
55	55.2	1.5	1.0	38.8	1.6	1.3	27.9	1.8	1.7	20.3	1.9	2.1	15.1	2.2	2.5	11.2	2.5	3.0									
60	60.2	1.5	1.0	42.3	1.6	1.3	30.4	1.8	1.7	22.2	1.9	2.1	16.6	2.1	2.5	12.4	2.4	3.0									
65	65.2	1.5	1.0	45.8	1.6	1.3	32.9	1.8	1.7	24.0	1.9	2.1	18.0	2.1	2.5	13.6	2.4	3.0	8.9	3.1	3.5						
70	70.2	1.5	1.0	49.3	1.6	1.3	35.5	1.8	1.7	25.9	1.9	2.1	19.5	2.1	2.6	14.8	2.4	3.0	10.6	2.8	3.5						
75	75.2	1.5	1.0	52.8	1.6	1.3	38.0	1.8	1.7	28.2	1.9	2.1	20.9	2.1	2.6	16.0	2.3	3.0	11.5	2.8	3.5						
80	80.2	1.5	1.0	56.3	1.6	1.3	40.5	1.8	1.7	30.0	1.9	2.1	22.3	2.1	2.6	17.1	2.3	3.0	12.5	2.7	3.5						
85	85.2	1.5	1.0	59.8	1.6	1.3	43.0	1.8	1.7	31.9	1.9	2.1	23.7	2.1	2.6	18.3	2.3	3.0	13.5	2.7	3.6	9.8	3.3	3.9			
90	90.2	1.5	1.0	63.3	1.6	1.3	45.6	1.8	1.7	33.6	1.9	2.1	25.2	2.1	2.6	19.4	2.3	3.1	14.4	2.6	3.6	10.9	3.1	3.9			
95	95.2	1.5	1.0	66.9	1.6	1.3	48.1	1.8	1.7	35.5	1.9	2.1	26.6	2.1	2.6	20.5	2.3	3.1	15.3	2.6	3.6	12.0	3.0	3.9			
100	100.2	1.5	1.0	70.4	1.6	1.3	50.6	1.8	1.7	37.4	1.9	2.1	28.0	2.1	2.6	21.6	2.3	3.1	16.2	2.6	3.6	12.9	2.9	4.0			
105	105.3	1.5	1.0	73.9	1.6	1.3	53.1	1.8	1.7	39.2	1.9	2.1	29.8	2.1	2.6	22.8	2.3	3.1	17.1	2.6	3.6	13.7	2.9	4.0	10.8	3.4	4.3
110	110.3	1.5	1.0	77.4	1.6	1.3	55.7	1.8	1.7	41.1	1.9	2.1	31.3	2.1	2.6	23.9	2.3	3.1	18.0	2.6	3.6	14.4	2.9	4.0	12.0	3.2	4.3
115	115.3	1.5	1.0	80.9	1.6	1.3	58.2	1.8	1.7	42.9	1.9	2.1	32.7	2.1	2.6	25.0	2.3	3.1	18.9	2.5	3.6	15.2	2.8	4.0	12.7	3.2	4.3
120	120.3	1.5	1.0	84.4	1.6	1.3	60.7	1.8	1.7	44.8	1.9	2.1	34.1	2.1	2.6	26.1	2.2	3.1	19.7	2.5	3.6	16.0	2.8	4.0	13.4	3.1	4.3
125	125.3	1.5	1.0	88.0	1.6	1.3	63.2	1.8	1.7	46.7	1.9	2.1	35.5	2.1	2.6	27.2	2.2	3.1	20.6	2.5	3.6	16.8	2.8	4.0	14.1	3.1	4.3
130	130.3	1.5	1.0	91.5	1.6	1.3	65.8	1.8	1.7	48.5	1.9	2.1	36.9	2.1	2.6	28.4	2.2	3.1	21.5	2.5	3.6	17.4	2.8	4.0	14.8	3.1	4.3
135	135.3	1.5	1.0	95.0	1.6	1.3	68.3	1.8	1.7	50.4	1.9	2.1	38.3	2.1	2.6	29.5	2.2	3.1	22.4	2.5	3.6	18.2	2.8	4.0	15.5	3.0	4.3
140	140.3	1.5	1.0	98.5	1.6	1.3	70.8	1.8	1.7	52.2	1.9	2.1	39.7	2.0	2.6	30.6	2.2	3.1	23.2	2.5	3.6	18.9	2.7	4.0	16.1	3.0	4.4
145	145.3	1.5	1.0	102.0	1.6	1.3	73.3	1.8	1.7	54.1	1.9	2.1	41.1	2.0	2.6	32.1	2.2	3.0	24.1	2.5	3.6	19.7	2.7	4.0	16.8	3.0	4.4
150	150.3	1.5	1.0	105.5	1.6	1.3	75.9	1.8	1.7	56.0	1.9	2.1	42.5	2.0	2.6	33.2	2.2	3.0	25.0	2.5	3.6	20.4	2.7	4.1	17.5	2.9	4.4

RETARDANCE "D" AND "B"

NOTE: Width and Depth dimensions are in feet; Velocity measurements are in feet per second; Depth "D" does not include allowance for freeboard or settlement.

Table DV-5 Parabolic Diversion Design Chart (Retardance "D" and "B", Grade 2.00%)

V1 FOR RETARDANCE "D", TOP WIDTH (T), DEPTH (D), AND V2 FOR RETARDANCE "B"

Grade 2.00 Percent

Q CFS	V1=2.0			V1=2.5			V1=3.0			V1=3.5			V1=4.0			V1=4.5			V1=5.0			V1=5.5			V1=6.0		
	T	D	V2	T	D	V2	T	D	V2	T	D	V2	T	D	V2	T	D	V2	T	D	V2	T	D	V2	T	D	V2
5	7.1	1.2	0.9																								
10	14.7	1.2	0.9	9.5	1.3	1.2	7.0	1.4	1.5																		
15	22.0	1.2	0.9	14.5	1.3	1.2	10.8	1.4	1.5	8.0	1.5	1.9	5.5	1.9	2.1												
20	29.3	1.2	0.9	19.6	1.2	1.2	14.6	1.3	1.5	10.9	1.5	1.9	8.1	1.6	2.3	5.5	2.1	2.6									
25	36.6	1.2	0.9	24.4	1.2	1.2	18.5	1.3	1.5	13.6	1.4	1.9	10.4	1.6	2.3	7.9	1.8	2.7									
30	43.9	1.2	0.9	29.3	1.2	1.2	22.2	1.3	1.6	16.6	1.4	1.9	12.7	1.5	2.3	9.7	1.7	2.7	7.3	2.0	3.1						
35	51.2	1.2	0.9	34.2	1.2	1.2	25.8	1.3	1.6	19.6	1.4	1.9	14.9	1.5	2.3	11.5	1.7	2.7	8.9	1.9	3.2						
40	58.5	1.2	0.9	39.0	1.2	1.2	29.5	1.3	1.6	22.4	1.4	1.9	17.1	1.5	2.3	13.3	1.6	2.8	10.4	1.8	3.2	8.0	2.1	3.6			
45	65.8	1.2	0.9	43.9	1.2	1.2	33.2	1.3	1.6	25.2	1.4	1.9	19.3	1.5	2.3	15.0	1.6	2.8	11.8	1.8	3.2	9.2	2.0	3.7			
50	73.1	1.2	0.9	48.8	1.2	1.2	36.8	1.3	1.6	28.0	1.4	1.9	21.7	1.5	2.3	16.7	1.6	2.8	13.2	1.8	3.2	10.5	1.9	3.7	7.9	2.3	4.1
55	80.4	1.2	0.9	53.6	1.2	1.2	40.5	1.3	1.6	30.7	1.4	1.9	23.9	1.5	2.3	18.5	1.6	2.8	14.6	1.7	3.2	11.7	1.9	3.7	9.2	2.2	4.1
60	87.7	1.2	0.9	58.5	1.2	1.2	44.2	1.3	1.6	33.5	1.4	1.9	26.0	1.5	2.3	20.2	1.6	2.8	16.0	1.7	3.2	12.8	1.9	3.7	10.2	2.1	4.1
65	95.0	1.2	0.9	63.4	1.2	1.2	47.9	1.3	1.6	36.3	1.4	1.9	28.2	1.5	2.3	22.1	1.6	2.8	17.4	1.7	3.3	14.0	1.9	3.7	11.3	2.1	4.2
70	102.3	1.2	0.9	68.2	1.2	1.2	51.6	1.3	1.6	39.1	1.4	1.9	30.3	1.5	2.3	23.8	1.6	2.8	18.8	1.7	3.3	15.2	1.9	3.7	12.3	2.1	4.2
75	109.6	1.2	0.9	73.1	1.2	1.2	55.2	1.3	1.6	41.9	1.4	1.9	32.5	1.5	2.3	25.5	1.6	2.8	20.1	1.7	3.3	16.2	1.8	3.7	13.2	2.0	4.2
80	116.9	1.2	0.9	78.0	1.2	1.2	58.9	1.3	1.6	44.7	1.4	1.9	34.6	1.5	2.3	27.2	1.6	2.8	21.5	1.7	3.3	17.4	1.8	3.6	14.2	2.0	4.2
85	124.2	1.2	0.9	82.9	1.2	1.2	62.6	1.3	1.6	47.4	1.4	1.9	36.8	1.5	2.3	28.9	1.6	2.8	22.9	1.7	3.3	18.5	1.8	3.6	15.1	2.0	4.2
90	131.5	1.2	0.9	87.7	1.2	1.2	66.3	1.3	1.6	50.2	1.4	1.9	39.0	1.5	2.3	30.6	1.6	2.8	24.6	1.7	3.2	19.8	1.8	3.8	16.1	2.0	4.2
95	138.8	1.2	0.9	92.6	1.2	1.2	69.9	1.3	1.6	53.0	1.4	1.9	41.1	1.5	2.3	32.3	1.6	2.8	25.9	1.7	3.3	20.8	1.8	3.8	17.0	2.0	4.2
100	146.1	1.2	0.9	97.5	1.2	1.2	73.6	1.3	1.6	55.8	1.4	1.9	43.3	1.5	2.3	34.0	1.6	2.8	27.3	1.7	3.3	21.9	1.8	3.8	18.0	2.0	4.2
105	153.4	1.2	0.9	102.3	1.2	1.2	77.3	1.3	1.6	58.6	1.4	1.9	45.4	1.5	2.3	35.7	1.6	2.8	28.6	1.7	3.3	23.0	1.8	3.8	18.9	2.0	4.2
110	160.7	1.2	0.9	107.2	1.2	1.2	81.0	1.3	1.6	61.4	1.4	1.9	47.6	1.5	2.3	37.3	1.6	2.8	30.0	1.7	3.3	24.1	1.8	3.8	19.8	2.0	4.2
115	168.0	1.2	0.9	112.1	1.2	1.2	84.7	1.3	1.6	64.2	1.4	1.9	49.8	1.5	2.3	39.0	1.6	2.8	31.3	1.7	3.3	25.3	1.8	3.8	20.8	2.0	4.2
120	175.3	1.2	0.9	117.0	1.2	1.2	88.3	1.3	1.6	67.0	1.4	1.9	51.9	1.5	2.3	40.7	1.6	2.8	32.7	1.7	3.3	26.7	1.8	3.7	21.7	2.0	4.2
125	182.6	1.2	0.9	121.8	1.2	1.2	92.0	1.3	1.6	69.7	1.4	1.9	54.1	1.5	2.3	42.4	1.6	2.8	34.1	1.7	3.3	27.8	1.8	3.7	22.6	1.9	4.3
130	189.9	1.2	0.9	126.7	1.2	1.2	95.7	1.3	1.6	72.5	1.4	1.9	56.2	1.5	2.3	44.1	1.6	2.8	35.4	1.7	3.3	28.9	1.8	3.7	23.6	1.9	4.3
135	197.3	1.2	0.9	131.6	1.2	1.2	99.4	1.3	1.6	75.3	1.4	1.9	58.4	1.5	2.3	45.8	1.6	2.8	36.8	1.7	3.3	30.0	1.8	3.7	24.5	1.9	4.3
140	204.6	1.2	0.9	136.5	1.2	1.2	103.1	1.3	1.6	78.1	1.4	1.9	60.6	1.5	2.3	47.5	1.6	2.8	38.1	1.7	3.3	31.1	1.8	3.7	25.4	1.9	4.3
145	211.9	1.2	0.9	141.3	1.2	1.2	106.7	1.3	1.6	80.9	1.4	1.9	62.7	1.5	2.3	49.2	1.6	2.8	39.5	1.7	3.3	32.3	1.8	3.7	26.4	1.9	4.3
150	219.2	1.2	0.9	146.2	1.2	1.2	110.4	1.3	1.6	83.7	1.4	1.9	64.9	1.5	2.3	50.9	1.6	2.8	40.8	1.7	3.3	33.4	1.8	3.7	27.3	1.9	4.3

RETARDANCE "D" AND "B"

NOTE: Width and Depth dimensions are in feet; Velocity measurements are in feet per second; Depth "D" does not include allowance for freeboard or settlement.

Table DV-6 Parabolic Diversion Design Chart (Retardance "D" and "B", Grade 4.00%)

V1 FOR RETARDANCE "D", TOP WIDTH (T), DEPTH (D), AND V2 FOR RETARDANCE "B"

Grade 4.00 Percent

Q CFS	V1=2.0			V1=2.5			V1=3.0			V1=3.5			V1=4.0			V1=4.5			V1=5.0			V1=5.5			V1=6.0		
	T	D	V2	T	D	V2	T	D	V2	T	D	V2	T	D	V2	T	D	V2	T	D	V2	T	D	V2	T	D	V2
5	10.1	0.9	0.8	7.0	1.0	1.1	4.9	1.1	1.4																		
10	20.6	0.9	0.8	14.4	0.9	1.1	10.3	1.0	1.4	7.9	1.1	1.8	6.1	1.2	2.1	4.5	1.4	2.4									
15	30.7	0.9	0.8	21.5	0.9	1.1	15.7	1.0	1.4	12.0	1.1	1.8	9.4	1.1	2.1	7.4	1.2	2.5	5.8	1.4	2.8						
20	40.9	0.9	0.8	28.6	0.9	1.1	20.9	1.0	1.4	16.3	1.0	1.8	12.6	1.1	2.1	10.1	1.2	2.5	8.0	1.3	2.9	6.3	1.4	3.3			
25	51.1	0.9	0.8	35.8	0.9	1.1	26.1	1.0	1.4	20.3	1.0	1.8	16.0	1.1	2.1	12.7	1.2	2.5	10.2	1.3	2.9	8.2	1.4	3.4	6.5	1.5	3.8
30	61.3	0.9	0.8	42.9	0.9	1.1	31.4	1.0	1.4	24.4	1.0	1.8	19.2	1.1	2.1	15.2	1.2	2.5	12.3	1.3	2.9	10.0	1.3	3.4	8.1	1.5	3.8
35	71.5	0.9	0.8	50.1	0.9	1.1	36.6	1.0	1.4	28.3	1.0	1.8	22.4	1.1	2.1	18.0	1.2	2.5	14.4	1.2	2.9	11.7	1.3	3.4	9.6	1.4	3.8
40	81.8	0.9	0.8	57.2	0.9	1.1	41.8	1.0	1.5	32.4	1.0	1.8	25.6	1.1	2.1	20.6	1.2	2.5	16.5	1.2	2.9	13.5	1.3	3.4	11.1	1.4	3.8
45	92.0	0.9	0.8	64.4	0.9	1.1	47.0	1.0	1.5	36.4	1.0	1.8	28.8	1.1	2.1	23.1	1.2	2.5	18.6	1.2	2.9	15.2	1.3	3.4	12.6	1.4	3.9
50	102.2	0.9	0.8	71.5	0.9	1.1	52.2	1.0	1.5	40.5	1.0	1.8	32.0	1.1	2.1	25.7	1.2	2.5	20.9	1.2	2.9	17.0	1.3	3.4	14.0	1.4	3.9
55	112.4	0.9	0.8	78.7	0.9	1.1	57.5	1.0	1.5	44.5	1.0	1.8	35.2	1.1	2.1	28.2	1.2	2.5	23.0	1.2	2.9	18.9	1.3	3.4	15.4	1.4	3.9
60	122.6	0.9	0.8	85.8	0.9	1.1	62.7	1.0	1.5	48.5	1.0	1.8	38.4	1.1	2.2	30.8	1.2	2.5	25.1	1.2	2.9	20.6	1.3	3.4	16.9	1.4	3.9
65	132.8	0.9	0.8	93.0	0.9	1.1	67.9	1.0	1.5	52.6	1.0	1.8	41.5	1.1	2.2	33.4	1.2	2.5	27.2	1.2	2.9	22.3	1.3	3.4	18.3	1.4	3.9
70	143.1	0.9	0.8	100.1	0.9	1.1	73.1	1.0	1.5	56.6	1.0	1.8	44.7	1.1	2.2	35.9	1.2	2.5	29.2	1.2	2.9	24.0	1.3	3.4	20.0	1.4	3.9
75	153.3	0.9	0.8	107.3	0.9	1.1	78.3	1.0	1.5	60.7	1.0	1.8	47.9	1.1	2.2	38.5	1.2	2.5	31.3	1.2	2.9	25.7	1.3	3.4	21.4	1.4	3.9
80	163.5	0.9	0.8	114.4	0.9	1.1	83.6	1.0	1.5	64.7	1.0	1.8	51.1	1.1	2.2	41.0	1.2	2.5	33.4	1.2	2.9	27.4	1.3	3.4	22.8	1.4	3.9
85	173.7	0.9	0.8	121.6	0.9	1.1	88.8	1.0	1.5	68.8	1.0	1.8	54.3	1.1	2.2	43.6	1.2	2.5	35.5	1.2	2.9	29.1	1.3	3.4	24.2	1.4	3.9
90	183.9	0.9	0.8	128.7	0.9	1.1	94.0	1.0	1.5	72.8	1.0	1.8	57.5	1.1	2.2	46.2	1.2	2.5	37.6	1.2	2.9	30.8	1.3	3.4	25.7	1.4	3.9
95	194.1	0.9	0.8	135.9	0.9	1.1	99.2	1.0	1.5	76.8	1.0	1.8	60.7	1.1	2.2	48.7	1.2	2.5	39.7	1.2	2.9	32.5	1.3	3.4	27.1	1.4	3.9
100	204.4	0.9	0.8	143.0	0.9	1.1	104.4	1.0	1.5	80.9	1.0	1.8	63.9	1.1	2.2	51.3	1.2	2.5	41.7	1.2	2.9	34.2	1.3	3.4	28.5	1.3	3.9
105	214.6	0.9	0.8	150.2	0.9	1.1	109.7	1.0	1.5	84.9	1.0	1.8	67.1	1.1	2.2	53.9	1.2	2.5	43.8	1.2	2.9	35.9	1.3	3.4	29.9	1.3	3.9
110	224.8	0.9	0.8	157.4	0.9	1.1	114.9	1.0	1.5	89.0	1.0	1.8	70.3	1.1	2.2	56.4	1.2	2.5	45.9	1.2	2.9	37.6	1.3	3.4	31.3	1.3	3.9
115	235.0	0.9	0.8	164.5	0.9	1.1	120.1	1.0	1.5	93.0	1.0	1.8	73.5	1.1	2.2	59.0	1.2	2.5	48.0	1.2	2.9	39.3	1.3	3.4	32.7	1.3	3.9
120	245.2	0.9	0.8	171.7	0.9	1.1	125.3	1.0	1.5	97.1	1.0	1.8	76.7	1.1	2.2	61.5	1.2	2.5	49.9	1.2	3.0	41.0	1.3	3.4	34.2	1.3	3.9
125	255.5	0.9	0.8	178.8	0.9	1.1	130.5	1.0	1.5	101.1	1.0	1.8	79.9	1.1	2.2	64.1	1.2	2.5	52.0	1.2	3.0	42.7	1.3	3.4	35.6	1.3	3.9
130	265.7	0.9	0.8	186.0	0.9	1.1	135.8	1.0	1.5	105.1	1.0	1.8	83.0	1.1	2.2	66.7	1.2	2.5	54.1	1.2	3.0	44.4	1.3	3.4	37.0	1.3	3.9
135	275.9	0.9	0.8	193.1	0.9	1.1	141.0	1.0	1.5	109.2	1.0	1.8	86.2	1.1	2.2	69.2	1.2	2.5	56.1	1.2	3.0	46.1	1.3	3.4	38.4	1.3	3.9
140	286.1	0.9	0.8	200.3	0.9	1.1	146.2	1.0	1.5	113.2	1.0	1.8	89.4	1.1	2.2	71.8	1.2	2.5	58.2	1.2	3.0	47.8	1.3	3.4	39.9	1.3	3.9
145	296.3	0.9	0.8	207.4	0.9	1.1	151.4	1.0	1.5	117.3	1.0	1.8	92.6	1.1	2.2	74.4	1.2	2.5	60.3	1.2	3.0	49.6	1.3	3.4	41.3	1.3	3.9
150	306.5	0.9	0.8	214.6	0.9	1.1	156.7	1.0	1.5	121.3	1.0	1.8	95.8	1.1	2.2	76.9	1.2	2.5	62.4	1.2	3.0	51.3	1.3	3.4	42.7	1.3	3.9

RETARDANCE "D" AND "B"

NOTE: Width and Depth dimensions are in feet; Velocity measurements are in feet per second; Depth "D" does not include allowance for freeboard or settlement.

Table DV-7 Parabolic Diversion Design Chart (Retardance "D" and "B", Grade 6.00%)

V1 FOR RETARDANCE "D", TOP WIDTH (T), DEPTH (D), AND V2 FOR RETARDANCE "B"

Grade 6.00 Percent

Q CFS	V1=2.0			V1=2.5			V1=3.0			V1=3.5			V1=4.0			V1=4.5			V1=5.0			V1=5.5			V1=6.0		
	T	D	V2	T	D	V2	T	D	V2	T	D	V2	T	D	V2	T	D	V2	T	D	V2	T	D	V2	T	D	V2
5	12.4	0.7	0.8	8.7	0.8	1.0	6.2	0.9	1.4	4.7	1.0	1.8	3.5	1.2	1.9												
10	24.7	0.7	0.8	17.6	0.8	1.0	12.8	0.9	1.4	9.8	0.9	1.7	7.8	1.0	2.0	6.2	1.0	2.3	4.9	1.1	2.7						
15	37.1	0.7	0.8	26.4	0.8	1.1	19.2	0.8	1.4	15.0	0.9	1.7	11.8	0.9	2.0	9.5	1.0	2.4	7.7	1.1	2.7	6.2	1.2	3.1	5.0	1.3	3.5
20	49.4	0.7	0.8	35.1	0.8	1.1	25.6	0.8	1.4	19.9	0.9	1.7	16.0	0.9	2.0	12.9	1.0	2.4	10.4	1.0	2.8	8.5	1.1	3.2	7.0	1.2	3.6
25	61.8	0.7	0.8	43.9	0.8	1.1	32.0	0.8	1.4	24.9	0.9	1.7	19.9	0.9	2.0	16.1	1.0	2.4	13.1	1.0	2.8	10.8	1.1	3.2	8.9	1.2	3.6
30	74.1	0.7	0.8	52.7	0.8	1.1	38.4	0.8	1.4	29.9	0.9	1.7	23.8	0.9	2.1	19.3	1.0	2.4	15.9	1.0	2.8	13.0	1.1	3.2	10.8	1.1	3.6
35	86.5	0.7	0.8	61.5	0.8	1.1	44.8	0.8	1.4	34.8	0.9	1.7	27.8	0.9	2.1	22.5	1.0	2.4	18.5	1.0	2.8	15.4	1.1	3.2	12.7	1.1	3.6
40	98.9	0.7	0.8	70.2	0.8	1.1	51.2	0.8	1.4	39.8	0.9	1.7	31.8	0.9	2.1	25.7	1.0	2.4	21.2	1.0	2.8	17.6	1.1	3.2	14.5	1.1	3.6
45	111.2	0.7	0.8	79.0	0.8	1.1	57.6	0.8	1.4	44.8	0.9	1.7	35.7	0.9	2.1	29.0	1.0	2.4	23.8	1.0	2.8	19.8	1.1	3.2	16.6	1.1	3.6
50	123.6	0.7	0.8	87.8	0.8	1.1	64.0	0.8	1.4	49.7	0.9	1.7	39.7	0.9	2.1	32.2	1.0	2.4	26.4	1.0	2.8	22.0	1.1	3.2	18.4	1.1	3.6
55	136.9	0.7	0.8	96.6	0.8	1.1	70.4	0.8	1.4	54.7	0.9	1.7	43.6	0.9	2.1	35.4	1.0	2.4	29.1	1.0	2.8	24.2	1.1	3.2	20.2	1.1	3.7
60	148.3	0.7	0.8	105.3	0.8	1.1	76.8	0.8	1.4	59.7	0.9	1.7	47.6	0.9	2.1	38.6	1.0	2.4	31.7	1.0	2.8	26.3	1.1	3.2	22.0	1.1	3.7
65	160.6	0.7	0.8	114.1	0.8	1.1	83.2	0.8	1.4	64.7	0.9	1.7	51.6	0.9	2.1	41.8	1.0	2.4	34.3	1.0	2.8	28.5	1.1	3.2	23.8	1.1	3.7
70	173.0	0.7	0.8	122.9	0.8	1.1	89.6	0.8	1.4	69.6	0.9	1.7	55.5	0.9	2.1	45.0	1.0	2.4	37.0	1.0	2.8	30.7	1.1	3.2	25.6	1.1	3.7
75	185.4	0.7	0.8	131.7	0.8	1.1	96.0	0.8	1.4	74.6	0.9	1.7	59.5	0.9	2.1	48.2	1.0	2.4	39.6	1.0	2.8	32.9	1.1	3.2	27.4	1.1	3.7
80	197.7	0.7	0.8	140.4	0.8	1.1	102.3	0.8	1.4	79.6	0.9	1.7	63.5	0.9	2.1	51.4	1.0	2.4	42.2	1.0	2.8	35.1	1.1	3.2	29.3	1.1	3.7
85	210.1	0.7	0.8	149.2	0.8	1.1	108.7	0.8	1.4	84.5	0.9	1.7	67.4	0.9	2.1	54.7	1.0	2.4	44.9	1.0	2.8	37.3	1.1	3.2	31.1	1.1	3.7
90	222.4	0.7	0.8	158.0	0.8	1.1	115.1	0.8	1.4	89.5	0.9	1.7	71.4	0.9	2.1	57.9	1.0	2.4	47.5	1.0	2.8	39.5	1.1	3.2	32.9	1.1	3.7
95	234.8	0.7	0.8	166.8	0.8	1.1	121.5	0.8	1.4	94.5	0.9	1.7	75.4	0.9	2.1	61.1	1.0	2.4	50.2	1.0	2.8	41.7	1.1	3.2	34.7	1.1	3.7
100	247.1	0.7	0.8	175.5	0.8	1.1	127.9	0.8	1.4	99.5	0.9	1.7	79.3	0.9	2.1	64.3	1.0	2.4	52.8	1.0	2.8	43.9	1.1	3.2	36.6	1.1	3.7
105	259.5	0.7	0.8	184.3	0.8	1.1	134.3	0.8	1.4	104.4	0.9	1.7	83.3	0.9	2.1	67.5	1.0	2.4	55.4	1.0	2.8	46.1	1.1	3.2	38.4	1.1	3.7
110	271.8	0.7	0.8	193.1	0.8	1.1	140.7	0.8	1.4	109.4	0.9	1.7	87.3	0.9	2.1	70.7	1.0	2.4	58.1	1.0	2.8	48.2	1.1	3.2	40.2	1.1	3.7
115	284.2	0.7	0.8	201.9	0.8	1.1	147.1	0.8	1.4	114.4	0.9	1.7	91.2	0.9	2.1	73.9	1.0	2.4	60.7	1.0	2.8	50.4	1.1	3.2	42.0	1.1	3.7
120	296.6	0.7	0.8	210.7	0.8	1.1	153.5	0.8	1.4	119.3	0.9	1.7	95.2	0.9	2.1	77.2	1.0	2.4	63.3	1.0	2.8	52.6	1.1	3.2	43.9	1.1	3.7
125	308.9	0.7	0.8	219.4	0.8	1.1	159.9	0.8	1.4	124.3	0.9	1.7	99.2	0.9	2.1	80.4	1.0	2.4	66.0	1.0	2.8	54.8	1.1	3.2	45.7	1.1	3.7
130	321.3	0.7	0.8	228.2	0.8	1.1	166.3	0.8	1.4	129.3	0.9	1.7	103.1	0.9	2.1	83.6	1.0	2.4	68.6	1.0	2.8	57.0	1.1	3.2	47.5	1.1	3.7
135	333.6	0.7	0.8	237.0	0.8	1.1	172.7	0.8	1.4	134.3	0.9	1.7	107.1	0.9	2.1	86.8	1.0	2.4	71.3	1.0	2.8	59.2	1.1	3.2	49.3	1.1	3.7
140	346.0	0.7	0.8	245.8	0.8	1.1	179.1	0.8	1.4	139.2	0.9	1.7	111.0	0.9	2.1	90.0	1.0	2.4	73.9	1.0	2.8	61.4	1.1	3.2	51.2	1.1	3.7
145	358.3	0.7	0.8	254.5	0.8	1.1	185.5	0.8	1.4	144.2	0.9	1.7	115.0	0.9	2.1	93.2	1.0	2.4	76.5	1.0	2.8	63.6	1.1	3.2	53.0	1.1	3.7
150	370.7	0.7	0.8	263.3	0.8	1.1	191.9	0.8	1.4	149.2	0.9	1.7	119.0	0.9	2.1	96.4	1.0	2.4	79.2	1.0	2.8	65.8	1.1	3.2	54.8	1.1	3.7

RETARDANCE "D" AND "B"

NOTE: Width and Depth dimensions are in feet; Velocity measurements are in feet per second; Depth "D" does not include allowance for freeboard or settlement.

Table DV-8 Parabolic Diversion Design Chart (Retardance "D" and "B", Grade 8.00%)

V1 FOR RETARDANCE "D", TOP WIDTH (T), DEPTH (D), AND V2 FOR RETARDANCE "B"

Grade 8.00 Percent

Q CFS	V1=2.0			V1=2.5			V1=3.0			V1=3.5			V1=4.0			V1=4.5			V1=5.0			V1=5.5			V1=6.0		
	T	D	V2	T	D	V2	T	D	V2	T	D	V2	T	D	V2	T	D	V2	T	D	V2	T	D	V2	T	D	V2
5	14.0	0.7	0.8	10.1	0.7	1.0	7.4	0.8	1.3	5.5	0.8	1.6	4.4	0.9	1.9	3.4	1.0	2.1									
10	28.0	0.7	0.8	20.1	0.7	1.0	15.0	0.8	1.3	11.3	0.8	1.7	9.1	0.8	2.0	7.4	0.9	2.3	6.0	0.9	2.6	4.9	1.0	3.0	3.6	1.2	3.3
15	41.9	0.7	0.8	30.1	0.7	1.0	22.4	0.8	1.3	17.0	0.8	1.7	13.9	0.8	2.0	11.4	0.9	2.3	9.2	0.9	2.7	7.6	1.0	3.0	6.3	1.0	3.4
20	55.9	0.7	0.8	40.1	0.7	1.0	29.9	0.8	1.3	22.6	0.8	1.7	18.5	0.8	2.0	15.1	0.9	2.3	12.5	0.9	2.7	10.2	1.0	3.1	8.5	1.0	3.5
25	69.9	0.7	0.8	50.1	0.7	1.0	37.3	0.8	1.3	28.2	0.8	1.7	23.1	0.8	2.0	18.8	0.9	2.3	15.6	0.9	2.7	13.0	0.9	3.1	10.6	1.0	3.5
30	83.9	0.7	0.8	60.1	0.7	1.0	44.8	0.8	1.3	33.9	0.8	1.7	27.7	0.8	2.0	22.6	0.9	2.3	18.8	0.9	2.7	15.6	0.9	3.1	13.0	1.0	3.5
35	97.9	0.7	0.8	70.1	0.7	1.0	52.3	0.8	1.3	39.5	0.8	1.7	32.3	0.8	2.0	26.3	0.9	2.3	21.7	0.9	2.7	18.2	0.9	3.1	15.3	1.0	3.5
40	111.8	0.7	0.8	80.2	0.7	1.0	59.7	0.8	1.3	45.1	0.8	1.7	36.9	0.8	2.0	30.1	0.9	2.3	24.8	0.9	2.7	20.8	0.9	3.1	17.5	1.0	3.5
45	125.8	0.7	0.8	90.2	0.7	1.0	67.2	0.8	1.3	50.8	0.8	1.7	41.5	0.8	2.0	33.8	0.9	2.3	27.9	0.9	2.7	23.3	0.9	3.1	19.7	1.0	3.5
50	139.8	0.7	0.8	100.2	0.7	1.0	74.7	0.8	1.3	56.4	0.8	1.7	46.1	0.8	2.0	37.6	0.9	2.3	31.0	0.9	2.7	25.9	0.9	3.1	21.9	1.0	3.5
55	153.8	0.7	0.8	110.2	0.7	1.0	82.1	0.8	1.3	62.1	0.8	1.7	50.7	0.8	2.0	41.3	0.9	2.3	34.1	0.9	2.7	28.5	0.9	3.1	24.0	1.0	3.5
60	167.8	0.7	0.8	120.2	0.7	1.0	89.6	0.8	1.3	67.7	0.8	1.7	55.3	0.8	2.0	45.1	0.9	2.3	37.2	0.9	2.7	31.1	0.9	3.1	26.2	1.0	3.5
65	181.7	0.7	0.8	130.3	0.7	1.0	97.0	0.8	1.3	73.3	0.8	1.7	60.0	0.8	2.0	48.8	0.9	2.3	40.3	0.9	2.7	33.7	0.9	3.1	28.4	1.0	3.5
70	195.7	0.7	0.8	140.3	0.7	1.0	104.5	0.8	1.3	79.0	0.8	1.7	64.6	0.8	2.0	52.6	0.9	2.3	43.4	0.9	2.7	36.3	0.9	3.1	30.6	1.0	3.5
75	209.7	0.7	0.8	150.3	0.7	1.0	112.0	0.8	1.3	84.6	0.8	1.7	69.2	0.8	2.0	56.3	0.9	2.3	46.6	0.9	2.7	38.9	0.9	3.1	32.8	1.0	3.5
80	223.7	0.7	0.8	160.3	0.7	1.0	119.4	0.8	1.3	90.3	0.8	1.7	73.8	0.8	2.0	60.1	0.9	2.3	49.8	0.9	2.7	41.4	0.9	3.1	35.0	1.0	3.5
85	237.7	0.7	0.8	170.3	0.7	1.0	126.9	0.8	1.3	95.9	0.8	1.7	78.4	0.8	2.0	63.8	0.9	2.3	52.7	0.9	2.7	44.0	0.9	3.1	37.1	1.0	3.5
90	251.6	0.7	0.8	180.3	0.7	1.0	134.4	0.8	1.3	101.6	0.8	1.7	83.0	0.8	2.0	67.6	0.9	2.3	55.8	0.9	2.7	46.6	0.9	3.1	39.3	1.0	3.5
95	265.6	0.7	0.8	190.4	0.7	1.0	141.8	0.8	1.3	107.2	0.8	1.7	87.6	0.8	2.0	71.3	0.9	2.3	58.9	0.9	2.7	49.2	0.9	3.1	41.5	1.0	3.5
100	279.6	0.7	0.8	200.4	0.7	1.0	149.3	0.8	1.3	112.8	0.8	1.7	92.2	0.8	2.0	75.1	0.9	2.3	62.0	0.9	2.7	51.8	0.9	3.1	43.7	1.0	3.5
105	293.6	0.7	0.8	210.4	0.7	1.0	156.8	0.8	1.3	118.5	0.8	1.7	96.8	0.8	2.0	78.9	0.9	2.3	65.1	0.9	2.7	54.4	0.9	3.1	45.9	1.0	3.5
110	307.6	0.7	0.8	220.4	0.7	1.0	164.2	0.8	1.3	124.1	0.8	1.7	101.4	0.8	2.0	82.6	0.9	2.3	68.2	0.9	2.7	57.0	0.9	3.1	48.0	1.0	3.5
115	321.5	0.7	0.8	230.4	0.7	1.0	171.7	0.8	1.3	129.8	0.8	1.7	106.1	0.8	2.0	86.4	0.9	2.3	71.3	0.9	2.7	59.6	0.9	3.1	50.2	1.0	3.5
120	335.5	0.7	0.8	240.5	0.7	1.0	179.1	0.8	1.3	135.4	0.8	1.7	110.7	0.8	2.0	90.1	0.9	2.3	74.4	0.9	2.7	62.2	0.9	3.1	52.4	1.0	3.5
125	349.5	0.7	0.8	250.5	0.7	1.0	186.6	0.8	1.3	141.0	0.8	1.7	115.3	0.8	2.0	93.9	0.9	2.3	77.5	0.9	2.7	64.7	0.9	3.1	54.6	1.0	3.5
130	363.5	0.7	0.8	260.5	0.7	1.0	194.1	0.8	1.3	146.7	0.8	1.7	119.9	0.8	2.0	97.6	0.9	2.3	80.6	0.9	2.7	67.3	0.9	3.1	56.8	1.0	3.5
135	377.5	0.7	0.8	270.5	0.7	1.0	201.5	0.8	1.3	152.3	0.8	1.7	124.5	0.8	2.0	101.4	0.9	2.3	83.7	0.9	2.7	69.9	0.9	3.1	59.0	1.0	3.5
140	391.5	0.7	0.8	280.5	0.7	1.0	209.0	0.8	1.3	158.0	0.8	1.7	129.1	0.8	2.0	105.1	0.9	2.3	86.8	0.9	2.7	72.5	0.9	3.1	61.1	1.0	3.5
145	405.4	0.7	0.8	290.6	0.7	1.0	216.5	0.8	1.3	163.6	0.8	1.7	133.7	0.8	2.0	108.9	0.9	2.3	89.9	0.9	2.7	75.1	0.9	3.1	63.3	1.0	3.5
150	419.4	0.7	0.8	300.6	0.7	1.0	223.9	0.8	1.3	169.3	0.8	1.7	138.3	0.8	2.0	112.6	0.9	2.3	93.0	0.9	2.7	77.7	0.9	3.1	65.5	1.0	3.5

RETARDANCE "D" AND "B"

NOTE: Width and Depth dimensions are in feet; Velocity measurements are in feet per second;
Depth "D" does not include allowance for freeboard or settlement.

Table DV-9 Parabolic Diversion Design Chart (Retardance "D" and "B", Grade 10.00%)

V1 FOR RETARDANCE "D", TOP WIDTH (T), DEPTH (D), AND V2 FOR RETARDANCE "B"

Grade 10.00 Percent

Q CFS	V1=2.0			V1=2.5			V1=3.0			V1=3.5			V1=4.0			V1=4.5			V1=5.0			V1=5.5			V1=6.0		
	T	D	V2	T	D	V2	T	D	V2	T	D	V2	T	D	V2	T	D	V2	T	D	V2	T	D	V2	T	D	V2
5	15.3	0.6	0.8	11.1	0.7	1.0	8.1	0.7	1.3	6.3	0.7	1.6	4.8	0.8	1.9	4.0	0.9	2.2	3.1	1.0	2.4						
10	30.6	0.6	0.8	22.1	0.7	1.0	16.5	0.7	1.3	12.8	0.7	1.6	10.0	0.8	2.0	8.4	0.8	2.2	6.9	0.8	2.6	5.7	0.9	2.9	4.7	1.0	3.3
15	45.9	0.6	0.8	33.2	0.7	1.0	24.7	0.7	1.3	19.2	0.7	1.6	15.0	0.8	2.0	12.7	0.8	2.2	10.5	0.8	2.6	8.7	0.9	3.0	7.3	0.9	3.3
20	61.2	0.6	0.8	44.2	0.7	1.0	32.9	0.7	1.3	25.6	0.7	1.6	20.0	0.8	2.0	17.0	0.8	2.2	14.1	0.8	2.6	11.8	0.9	3.0	9.8	0.9	3.4
25	76.5	0.6	0.8	55.3	0.7	1.0	41.1	0.7	1.3	32.0	0.7	1.6	25.0	0.8	2.0	21.2	0.8	2.3	17.6	0.8	2.6	14.7	0.9	3.0	12.5	0.9	3.4
30	91.8	0.6	0.8	66.3	0.7	1.0	49.3	0.7	1.3	38.3	0.7	1.6	29.9	0.8	2.0	25.4	0.8	2.3	21.1	0.8	2.6	17.7	0.8	3.0	15.0	0.9	3.3
35	107.1	0.6	0.8	77.4	0.7	1.0	57.5	0.7	1.3	44.7	0.7	1.6	34.9	0.8	2.0	29.7	0.8	2.3	24.6	0.8	2.6	20.6	0.8	3.0	17.5	0.9	3.4
40	122.4	0.6	0.8	88.4	0.7	1.0	65.7	0.7	1.3	51.1	0.7	1.6	39.9	0.8	2.0	33.9	0.8	2.3	28.1	0.8	2.6	23.5	0.8	3.0	20.0	0.9	3.4
45	137.8	0.6	0.8	99.5	0.7	1.0	73.9	0.7	1.3	57.5	0.7	1.6	44.9	0.8	2.0	38.0	0.8	2.3	31.6	0.8	2.6	26.5	0.8	3.0	22.5	0.9	3.4
50	153.1	0.6	0.8	110.6	0.7	1.0	82.1	0.7	1.3	63.9	0.7	1.6	49.9	0.8	2.0	42.2	0.8	2.3	35.1	0.8	2.6	29.4	0.8	3.0	25.0	0.9	3.4
55	168.4	0.6	0.8	121.6	0.7	1.0	90.3	0.7	1.3	70.3	0.7	1.6	54.9	0.8	2.0	46.4	0.8	2.3	38.6	0.8	2.6	32.3	0.8	3.0	27.5	0.9	3.4
60	183.7	0.6	0.8	132.7	0.7	1.0	98.5	0.7	1.3	76.7	0.7	1.6	59.9	0.8	2.0	50.7	0.8	2.3	42.1	0.8	2.6	35.3	0.8	3.0	30.0	0.9	3.4
65	199.0	0.6	0.8	143.7	0.7	1.0	106.7	0.7	1.3	83.1	0.7	1.6	64.8	0.8	2.0	54.9	0.8	2.3	45.6	0.8	2.6	38.2	0.8	3.0	32.5	0.9	3.4
70	214.3	0.6	0.8	154.8	0.7	1.0	115.0	0.7	1.3	89.4	0.7	1.6	69.8	0.8	2.0	59.1	0.8	2.3	49.1	0.8	2.6	41.2	0.8	3.0	35.0	0.9	3.4
75	229.6	0.6	0.8	165.8	0.7	1.0	123.2	0.7	1.3	95.8	0.7	1.6	74.8	0.8	2.0	63.3	0.8	2.3	52.6	0.8	2.6	44.1	0.8	3.0	37.4	0.9	3.4
80	244.9	0.6	0.8	176.9	0.7	1.0	131.4	0.7	1.3	102.2	0.7	1.6	79.8	0.8	2.0	67.6	0.8	2.3	56.1	0.8	2.6	47.0	0.8	3.0	39.8	0.9	3.4
85	260.2	0.6	0.8	187.9	0.7	1.0	139.6	0.7	1.3	108.6	0.7	1.6	84.8	0.8	2.0	71.8	0.8	2.3	59.6	0.8	2.6	50.0	0.8	3.0	42.3	0.9	3.4
90	275.5	0.6	0.8	199.0	0.7	1.0	147.8	0.7	1.3	115.0	0.7	1.6	89.8	0.8	2.0	76.0	0.8	2.3	63.1	0.8	2.6	52.9	0.8	3.0	44.8	0.9	3.4
95	290.8	0.6	0.8	210.0	0.7	1.0	156.0	0.7	1.3	121.4	0.7	1.6	94.8	0.8	2.0	80.2	0.8	2.3	66.6	0.8	2.6	55.8	0.8	3.0	47.3	0.9	3.4
100	306.1	0.6	0.8	221.1	0.7	1.0	164.2	0.7	1.3	127.8	0.7	1.6	99.8	0.8	2.0	84.4	0.8	2.3	70.1	0.8	2.6	58.8	0.8	3.0	49.7	0.9	3.4
105	321.4	0.6	0.8	232.2	0.7	1.0	172.4	0.7	1.3	134.2	0.7	1.6	104.7	0.8	2.0	88.7	0.8	2.3	73.6	0.8	2.6	61.7	0.8	3.0	52.2	0.9	3.4
110	336.7	0.6	0.8	243.2	0.7	1.0	180.6	0.7	1.3	140.5	0.7	1.6	109.7	0.8	2.0	92.9	0.8	2.3	77.1	0.8	2.6	64.7	0.8	3.0	54.7	0.9	3.4
115	352.0	0.6	0.8	254.3	0.7	1.0	188.8	0.7	1.3	146.9	0.7	1.6	114.7	0.8	2.0	97.1	0.8	2.3	80.6	0.8	2.6	67.6	0.8	3.0	57.2	0.9	3.4
120	367.3	0.6	0.8	265.3	0.7	1.0	197.1	0.7	1.3	153.3	0.7	1.6	119.7	0.8	2.0	101.3	0.8	2.3	84.1	0.8	2.6	70.5	0.8	3.0	59.7	0.9	3.4
125	382.6	0.6	0.8	276.4	0.7	1.0	205.3	0.7	1.3	159.7	0.7	1.6	124.7	0.8	2.0	105.5	0.8	2.3	87.6	0.8	2.6	73.5	0.8	3.0	62.2	0.9	3.4
130	397.9	0.6	0.8	287.4	0.7	1.0	213.5	0.7	1.3	166.1	0.7	1.6	129.7	0.8	2.0	109.8	0.8	2.3	91.1	0.8	2.6	76.4	0.8	3.0	64.7	0.9	3.4
135	413.2	0.6	0.8	298.5	0.7	1.0	221.7	0.7	1.3	172.5	0.7	1.6	134.7	0.8	2.0	114.0	0.8	2.3	94.6	0.8	2.6	79.3	0.8	3.0	67.2	0.9	3.4
140	428.6	0.6	0.8	309.5	0.7	1.0	229.9	0.7	1.3	178.9	0.7	1.6	139.7	0.8	2.0	118.2	0.8	2.3	98.1	0.8	2.6	82.3	0.8	3.0	69.6	0.9	3.4
145	443.9	0.6	0.8	320.6	0.7	1.0	238.1	0.7	1.3	185.3	0.7	1.6	144.6	0.8	2.0	122.4	0.8	2.3	101.7	0.8	2.6	85.2	0.8	3.0	72.1	0.9	3.4
150	459.2	0.6	0.8	331.7	0.7	1.0	246.3	0.7	1.3	191.6	0.7	1.6	149.6	0.8	2.0	126.7	0.8	2.3	105.2	0.8	2.6	88.2	0.9	3.0	74.6	0.9	3.4

RETARDANCE "D" AND "B"

NOTE: Width and Depth dimensions are in feet; Velocity measurements are in feet per second; Depth "D" does not include allowance for freeboard or settlement.

Table DV-10 Parabolic Diversion Design Chart (Retardance "D" and "C", Grade .50%)

V1 FOR RETARDANCE "D", TOP WIDTH (T), DEPTH (D), AND V2 FOR RETARDANCE "C"

Grade 0.50 Percent

Q CFS	V1=2.0			V1=2.5			V1=3.0			V1=3.5			V1=4.0			V1=4.5			V1=5.0			V1=5.5			V1=6.0		
	T	D	V2	T	D	V2	T	D	V2	T	D	V2	T	D	V2	T	D	V2	T	D	V2	T	D	V2	T	D	V2
5																											
10																											
15	8.4	1.6	1.7																								
20	11.7	1.5	1.7	7.1	2.0	2.2																					
25	14.9	1.5	1.7	9.7	1.8	2.2																					
30	18.0	1.5	1.7	12.0	1.7	2.2																					
35	21.0	1.5	1.7	14.2	1.7	2.2	9.3	2.1	2.7																		
40	24.4	1.5	1.7	16.3	1.7	2.2	10.9	2.0	2.7																		
45	27.4	1.5	1.7	18.5	1.7	2.2	12.5	2.0	2.7																		
50	30.5	1.5	1.7	20.6	1.7	2.2	14.1	1.9	2.7	8.7	2.6	3.3															
55	33.5	1.5	1.7	22.7	1.7	2.2	15.7	1.9	2.7	10.4	2.4	3.3															
60	36.6	1.5	1.7	24.8	1.7	2.2	17.2	1.9	2.7	11.7	2.3	3.3															
65	39.6	1.5	1.7	27.3	1.7	2.2	18.8	1.9	2.7	12.9	2.3	3.3															
70	42.6	1.5	1.7	29.4	1.7	2.2	20.3	1.9	2.7	14.0	2.2	3.3	9.8	2.8	3.8												
75	45.7	1.5	1.7	31.4	1.7	2.2	21.8	1.9	2.7	15.2	2.2	3.3	11.3	2.7	3.8												
80	48.7	1.5	1.7	33.5	1.7	2.2	23.3	1.9	2.7	16.3	2.2	3.3	12.2	2.6	3.8												
85	51.7	1.5	1.7	35.6	1.6	2.2	24.8	1.9	2.7	17.4	2.2	3.3	13.2	2.5	3.8												
90	54.8	1.5	1.7	37.7	1.6	2.2	26.3	1.9	2.7	18.5	2.2	3.3	14.2	2.5	3.8												
95	57.8	1.5	1.7	39.8	1.6	2.2	27.8	1.9	2.7	19.6	2.2	3.3	15.1	2.5	3.8												
100	60.9	1.5	1.7	41.9	1.6	2.2	29.7	1.9	2.7	20.7	2.2	3.3	16.0	2.5	3.8	11.0	3.2	4.3									
105	63.9	1.5	1.7	44.0	1.6	2.2	31.2	1.9	2.7	21.8	2.2	3.3	16.9	2.5	3.8	12.3	3.0	4.3									
110	66.9	1.5	1.7	46.1	1.6	2.2	32.6	1.9	2.7	22.9	2.2	3.3	17.8	2.4	3.8	13.1	2.9	4.3									
115	70.0	1.5	1.7	48.1	1.6	2.2	34.1	1.9	2.7	24.0	2.1	3.3	18.7	2.4	3.8	13.9	2.9	4.3									
120	73.0	1.5	1.7	50.2	1.6	2.2	35.6	1.9	2.7	25.1	2.1	3.3	19.6	2.4	3.8	14.6	2.9	4.3									
125	76.1	1.5	1.7	52.3	1.6	2.2	37.1	1.9	2.7	26.2	2.1	3.3	20.5	2.4	3.8	15.4	2.8	4.3									
130	79.1	1.5	1.7	54.4	1.6	2.2	38.5	1.9	2.7	27.3	2.1	3.3	21.3	2.4	3.8	16.1	2.8	4.3									
135	82.1	1.5	1.7	56.5	1.6	2.2	40.0	1.9	2.7	28.4	2.1	3.3	22.2	2.4	3.8	16.9	2.8	4.3									
140	85.2	1.5	1.7	58.6	1.6	2.2	41.5	1.9	2.7	29.4	2.1	3.3	23.1	2.4	3.8	17.6	2.8	4.3									
145	88.2	1.5	1.7	60.7	1.6	2.2	43.0	1.9	2.7	30.5	2.1	3.3	24.0	2.4	3.8	18.3	2.8	4.3	12.3	3.7	4.9						
150	91.3	1.5	1.7	62.8	1.6	2.2	44.5	1.9	2.7	31.6	2.1	3.3	24.8	2.4	3.8	19.0	2.7	4.3	13.1	3.5	4.9						

RETARDANCE "D" AND "C"

NOTE: Width and Depth dimensions are in feet; Velocity measurements are in feet per second; Depth "D" does not include allowance for freeboard or settlement.

Table DV-11 Parabolic Diversion Design Chart (Retardance "D" and "C", Grade 1.00%)

V1 FOR RETARDANCE "D", TOP WIDTH (T), DEPTH (D), AND V2 FOR RETARDANCE "C"

Grade 1.00 Percent

Q CFS	V1=2.0			V1=2.5			V1=3.0			V1=3.5			V1=4.0			V1=4.5			V1=5.0			V1=5.5			V1=6.0		
	T	D	V2	T	D	V2	T	D	V2	T	D	V2	T	D	V2	T	D	V2	T	D	V2	T	D	V2	T	D	V2
5																											
10	8.2	1.2	1.6	5.2	1.4	2.0																					
15	12.6	1.1	1.6	8.7	1.3	2.1	5.5	1.6	2.6																		
20	17.1	1.1	1.6	11.8	1.2	2.1	8.2	1.4	2.6																		
25	21.4	1.1	1.6	14.9	1.2	2.1	10.5	1.4	2.6	7.3	1.6	3.1															
30	25.7	1.1	1.6	18.0	1.2	2.1	12.8	1.4	2.6	9.1	1.6	3.2															
35	29.9	1.1	1.6	21.2	1.2	2.1	15.0	1.3	2.6	10.9	1.5	3.1	7.8	1.8	3.7												
40	34.2	1.1	1.6	24.3	1.2	2.1	17.3	1.3	2.6	12.6	1.5	3.1	9.2	1.7	3.7												
45	38.5	1.1	1.6	27.3	1.2	2.1	19.5	1.3	2.6	14.3	1.5	3.1	10.6	1.7	3.7	7.2	2.2	4.3									
50	42.7	1.1	1.6	30.3	1.2	2.1	21.9	1.3	2.6	16.0	1.5	3.2	11.9	1.7	3.7	8.8	2.0	4.3									
55	47.0	1.1	1.6	33.3	1.2	2.1	24.1	1.3	2.6	17.7	1.5	3.2	13.3	1.7	3.7	9.9	1.9	4.3									
60	51.3	1.1	1.6	36.3	1.2	2.1	26.3	1.3	2.6	19.3	1.5	3.2	14.6	1.7	3.7	11.0	1.9	4.3									
65	55.5	1.1	1.6	39.4	1.2	2.1	28.5	1.3	2.6	21.0	1.5	3.2	15.9	1.6	3.7	12.1	1.9	4.3	8.0	2.5	4.9						
70	59.8	1.1	1.6	42.4	1.2	2.1	30.7	1.3	2.6	22.7	1.5	3.2	17.1	1.6	3.7	13.2	1.9	4.3	9.5	2.3	4.8						
75	64.1	1.1	1.6	45.4	1.2	2.1	32.9	1.3	2.6	24.6	1.5	3.1	18.5	1.6	3.7	14.2	1.8	4.3	10.4	2.2	4.9						
80	68.3	1.1	1.6	48.4	1.2	2.1	35.0	1.3	2.6	26.2	1.5	3.1	19.8	1.6	3.7	15.2	1.8	4.3	11.3	2.2	4.9						
85	72.6	1.1	1.6	51.5	1.2	2.1	37.2	1.3	2.6	27.9	1.5	3.1	21.0	1.6	3.7	16.3	1.8	4.3	12.1	2.2	4.9	8.8	2.7	5.4			
90	76.9	1.1	1.6	54.5	1.2	2.1	39.4	1.3	2.6	29.5	1.5	3.1	22.3	1.6	3.7	17.3	1.8	4.3	13.0	2.1	4.9	9.8	2.6	5.4			
95	81.1	1.1	1.6	57.5	1.2	2.1	41.6	1.3	2.6	31.1	1.5	3.1	23.6	1.6	3.7	18.3	1.8	4.3	13.8	2.1	4.9	10.9	2.5	5.3			
100	85.4	1.1	1.6	60.5	1.2	2.1	43.8	1.3	2.6	32.7	1.5	3.1	24.9	1.6	3.7	19.3	1.8	4.3	14.6	2.1	4.9	11.6	2.4	5.4			
105	89.7	1.1	1.6	63.6	1.2	2.1	46.0	1.3	2.6	34.4	1.5	3.1	26.5	1.6	3.7	20.3	1.8	4.3	15.4	2.1	4.9	12.4	2.4	5.4	9.7	2.8	5.8
110	94.0	1.1	1.6	66.6	1.2	2.1	48.2	1.3	2.6	36.0	1.5	3.1	27.7	1.6	3.7	21.3	1.8	4.3	16.2	2.1	4.9	13.1	2.4	5.4	10.8	2.6	5.8
115	98.2	1.1	1.6	69.6	1.2	2.1	50.4	1.3	2.6	37.6	1.5	3.1	29.0	1.6	3.7	22.3	1.8	4.3	17.0	2.1	4.9	13.8	2.3	5.4	11.5	2.6	5.8
120	102.5	1.1	1.6	72.6	1.2	2.1	52.5	1.3	2.6	39.3	1.5	3.1	30.2	1.6	3.7	23.3	1.8	4.3	17.9	2.1	4.9	14.5	2.3	5.4	12.2	2.6	5.8
125	106.8	1.1	1.6	75.7	1.2	2.1	54.7	1.3	2.6	40.9	1.5	3.1	31.5	1.6	3.7	24.3	1.8	4.3	18.7	2.1	4.9	15.2	2.3	5.4	12.8	2.5	5.8
130	111.0	1.1	1.6	78.7	1.2	2.1	56.9	1.3	2.6	42.5	1.5	3.1	32.7	1.6	3.7	25.3	1.8	4.3	19.4	2.1	4.9	15.9	2.3	5.4	13.4	2.5	5.8
135	115.3	1.1	1.6	81.7	1.2	2.1	59.1	1.3	2.6	44.2	1.5	3.1	34.0	1.6	3.7	26.3	1.8	4.3	20.2	2.0	4.9	16.6	2.3	5.4	14.1	2.5	5.8
140	119.6	1.1	1.6	84.7	1.2	2.1	61.3	1.3	2.6	45.8	1.5	3.1	35.2	1.6	3.7	27.3	1.8	4.3	21.0	2.0	4.9	17.2	2.3	5.4	14.7	2.5	5.8
145	123.8	1.1	1.6	87.8	1.2	2.1	63.5	1.3	2.6	47.5	1.5	3.1	36.5	1.6	3.7	28.7	1.8	4.3	21.8	2.0	4.9	17.9	2.3	5.4	15.3	2.5	5.8
150	128.1	1.1	1.6	90.8	1.2	2.1	65.7	1.3	2.6	49.1	1.5	3.1	37.8	1.6	3.7	29.7	1.8	4.3	22.6	2.0	4.9	18.6	2.3	5.4	15.9	2.4	5.8

RETARDANCE "D" AND "C"

NOTE: Width and Depth dimensions are in feet; Velocity measurements are in feet per second; Depth "D" does not include allowance for freeboard or settlement.

Table DV-12 Parabolic Diversion Design Chart (Retardance "D" and "C", Grade 2.00%)

V1 FOR RETARDANCE "D", TOP WIDTH (T), DEPTH (D), AND V2 FOR RETARDANCE "C"

Grade 2.00 Percent

Q CFS	V1=2.0			V1=2.5			V1=3.0			V1=3.5			V1=4.0			V1=4.5			V1=5.0			V1=5.5			V1=6.0		
	T	D	V2	T	D	V2	T	D	V2	T	D	V2	T	D	V2	T	D	V2	T	D	V2	T	D	V2	T	D	V2
5	5.9	0.9	1.5																								
10	12.4	0.8	1.5	8.1	0.9	2.0	5.9	1.0	2.5																		
15	18.5	0.8	1.5	12.3	0.9	2.0	9.3	1.0	2.5	6.8	1.1	3.0	4.7	1.4	3.5												
20	24.7	0.8	1.5	16.7	0.9	2.0	12.5	1.0	2.5	9.4	1.1	3.0	7.0	1.2	3.6	4.7	1.5	4.1									
25	30.8	0.8	1.5	20.8	0.9	2.0	15.9	1.0	2.4	11.8	1.1	3.0	9.0	1.2	3.5	6.8	1.3	4.1									
30	37.0	0.8	1.5	25.0	0.9	2.0	19.0	1.0	2.5	14.3	1.1	3.0	11.0	1.2	3.5	8.5	1.3	4.1	6.4	1.5	4.7						
35	43.2	0.8	1.5	29.1	0.9	2.0	22.2	1.0	2.5	16.9	1.0	3.0	12.9	1.1	3.5	10.1	1.3	4.1	7.8	1.4	4.7						
40	49.3	0.8	1.5	33.3	0.9	2.0	25.3	1.0	2.5	19.3	1.0	3.0	14.8	1.1	3.5	11.6	1.3	4.1	9.1	1.4	4.7	7.1	1.6	5.2			
45	55.5	0.8	1.5	37.4	0.9	2.0	28.5	1.0	2.5	21.7	1.0	3.0	16.7	1.1	3.5	13.1	1.3	4.1	10.4	1.4	4.7	8.2	1.6	5.2			
50	61.7	0.8	1.5	41.6	0.9	2.0	31.7	1.0	2.5	24.1	1.0	3.0	18.8	1.1	3.5	14.7	1.2	4.1	11.7	1.4	4.7	9.3	1.5	5.3	7.1	1.8	5.8
55	67.8	0.8	1.5	45.7	0.9	2.0	34.8	1.0	2.5	26.5	1.0	3.0	20.7	1.1	3.5	16.2	1.2	4.1	12.9	1.4	4.7	10.4	1.5	5.3	8.2	1.7	5.8
60	74.0	0.8	1.5	49.9	0.9	2.0	38.0	1.0	2.5	28.9	1.0	3.0	22.6	1.1	3.5	17.7	1.2	4.1	14.1	1.4	4.7	11.4	1.5	5.3	9.2	1.7	5.8
65	80.2	0.8	1.5	54.0	0.9	2.0	41.1	1.0	2.5	31.4	1.0	3.0	24.5	1.1	3.5	19.5	1.2	4.1	15.4	1.3	4.7	12.4	1.5	5.3	10.1	1.7	5.8
70	86.3	0.8	1.5	58.2	0.9	2.0	44.3	1.0	2.5	33.8	1.0	3.0	26.3	1.1	3.5	21.0	1.2	4.1	16.6	1.3	4.7	13.5	1.5	5.3	11.0	1.6	5.8
75	92.5	0.8	1.5	62.3	0.9	2.0	47.5	1.0	2.5	36.2	1.0	3.0	28.2	1.1	3.5	22.4	1.2	4.1	17.8	1.3	4.7	14.5	1.5	5.3	11.8	1.6	5.8
80	98.7	0.8	1.5	66.5	0.9	2.0	50.6	1.0	2.5	38.6	1.0	3.0	30.1	1.1	3.5	23.9	1.2	4.1	19.0	1.3	4.7	15.5	1.5	5.3	12.7	1.6	5.8
85	104.8	0.8	1.5	70.6	0.9	2.0	53.8	1.0	2.5	41.0	1.0	3.0	32.0	1.1	3.5	25.4	1.2	4.1	20.3	1.3	4.7	16.5	1.5	5.3	13.6	1.6	5.8
90	111.0	0.8	1.5	74.8	0.9	2.0	57.0	1.0	2.5	43.4	1.0	3.0	33.8	1.1	3.5	26.9	1.2	4.1	21.8	1.3	4.6	17.5	1.5	5.3	14.4	1.6	5.8
95	117.2	0.8	1.5	78.9	0.9	2.0	60.1	1.0	2.5	45.8	1.0	3.0	35.7	1.1	3.5	28.4	1.2	4.1	23.0	1.3	4.6	18.6	1.5	5.3	15.3	1.6	5.8
100	123.3	0.8	1.5	83.1	0.9	2.0	63.3	1.0	2.5	48.2	1.0	3.0	37.6	1.1	3.5	29.9	1.2	4.1	24.2	1.3	4.6	19.6	1.5	5.3	16.2	1.6	5.8
105	129.5	0.8	1.5	87.3	0.9	2.0	66.4	1.0	2.5	50.6	1.0	3.0	39.5	1.1	3.5	31.4	1.2	4.1	25.4	1.3	4.6	20.6	1.5	5.3	17.0	1.6	5.8
110	135.7	0.8	1.5	91.4	0.9	2.0	69.6	1.0	2.5	53.0	1.0	3.0	41.3	1.1	3.5	32.9	1.2	4.1	26.6	1.3	4.7	21.6	1.4	5.3	17.9	1.6	5.8
115	141.8	0.8	1.5	95.6	0.9	2.0	72.8	1.0	2.5	55.4	1.0	3.0	43.2	1.1	3.5	34.4	1.2	4.1	27.9	1.3	4.7	22.6	1.4	5.3	18.7	1.6	5.8
120	148.0	0.8	1.5	99.7	0.9	2.0	75.9	1.0	2.5	57.9	1.0	3.0	45.1	1.1	3.5	35.9	1.2	4.1	29.1	1.3	4.7	23.9	1.4	5.2	19.5	1.6	5.8
125	154.1	0.8	1.5	103.9	0.9	2.0	79.1	1.0	2.5	60.3	1.0	3.0	47.0	1.1	3.5	37.4	1.2	4.1	30.3	1.3	4.7	24.8	1.4	5.2	20.4	1.6	5.8
130	160.3	0.8	1.5	108.0	0.9	2.0	82.3	1.0	2.5	62.7	1.0	3.0	48.8	1.1	3.5	38.9	1.2	4.1	31.5	1.3	4.7	25.8	1.4	5.3	21.2	1.6	5.8
135	166.5	0.8	1.5	112.2	0.9	2.0	85.4	1.0	2.5	65.1	1.0	3.0	50.7	1.1	3.5	40.3	1.2	4.1	32.7	1.3	4.7	26.8	1.4	5.3	22.1	1.6	5.8
140	172.6	0.8	1.5	116.3	0.9	2.0	88.6	1.0	2.5	67.5	1.0	3.0	52.6	1.1	3.5	41.8	1.2	4.1	33.9	1.3	4.7	27.8	1.4	5.3	22.9	1.6	5.8
145	178.8	0.8	1.5	120.5	0.9	2.0	91.8	1.0	2.5	69.9	1.0	3.0	54.5	1.1	3.5	43.3	1.2	4.1	35.1	1.3	4.7	28.8	1.4	5.3	23.7	1.6	5.8
150	185.0	0.8	1.5	124.6	0.9	2.0	94.9	1.0	2.5	72.3	1.0	3.0	56.4	1.1	3.5	44.8	1.2	4.1	36.3	1.3	4.7	29.8	1.4	5.3	24.6	1.6	5.8

RETARDANCE "D" AND "C"

NOTE: Width and Depth dimensions are in feet; Velocity measurements are in feet per second;
Depth "D" does not include allowance for freeboard or settlement.

Table DV-13 Parabolic Diversion Design Chart (Retardance "D" and "C", Grade 4.00%)

V1 FOR RETARDANCE "D", TOP WIDTH (T), DEPTH (D), AND V2 FOR RETARDANCE "C"

Grade 4.00 Percent

Q CFS	V1=2.0			V1=2.5			V1=3.0			V1=3.5			V1=4.0			V1=4.5			V1=5.0			V1=5.5			V1=6.0		
	T	D	V2	T	D	V2	T	D	V2	T	D	V2	T	D	V2	T	D	V2	T	D	V2	T	D	V2	T	D	V2
5	8.5	0.6	1.4	5.9	0.7	1.8	4.1	0.8	2.3																		
10	17.2	0.6	1.4	12.1	0.7	1.8	8.8	0.7	2.3	6.7	0.8	2.8	5.2	0.9	3.3	3.8	1.0	3.9									
15	25.8	0.6	1.4	18.1	0.7	1.8	13.4	0.7	2.3	10.3	0.8	2.8	8.1	0.8	3.4	6.4	0.9	3.9	4.9	1.0	4.5						
20	34.4	0.6	1.4	24.2	0.7	1.8	17.8	0.7	2.3	13.9	0.8	2.8	10.9	0.8	3.4	8.7	0.9	3.9	6.9	1.0	4.5	5.5	1.1	5.0			
25	43.0	0.6	1.4	30.2	0.7	1.9	22.3	0.7	2.3	17.4	0.8	2.8	13.8	0.8	3.3	10.9	0.9	3.9	8.8	1.0	4.5	7.1	1.0	5.1	5.7	1.2	5.6
30	51.6	0.6	1.4	36.3	0.7	1.9	26.7	0.7	2.3	20.8	0.8	2.8	16.5	0.8	3.3	13.2	0.9	3.9	10.7	0.9	4.5	8.7	1.0	5.1	7.1	1.1	5.6
35	60.2	0.6	1.4	42.3	0.7	1.9	31.1	0.7	2.3	24.3	0.8	2.8	19.3	0.8	3.4	15.6	0.9	3.9	12.5	0.9	4.5	10.3	1.0	5.0	8.4	1.1	5.6
40	68.8	0.6	1.4	48.3	0.7	1.9	35.6	0.7	2.3	27.8	0.8	2.8	22.0	0.8	3.4	17.8	0.9	3.9	14.4	0.9	4.5	11.8	1.0	5.0	9.8	1.1	5.7
45	77.4	0.6	1.4	54.4	0.7	1.9	40.0	0.7	2.4	31.2	0.8	2.8	24.8	0.8	3.4	20.0	0.9	3.9	16.4	0.9	4.4	13.3	1.0	5.0	11.1	1.1	5.7
50	86.0	0.6	1.4	60.4	0.7	1.9	44.5	0.7	2.4	34.7	0.8	2.8	27.5	0.8	3.4	22.2	0.9	3.9	18.2	0.9	4.4	14.9	1.0	5.0	12.3	1.1	5.7
55	94.6	0.6	1.4	66.5	0.7	1.9	48.9	0.7	2.4	38.2	0.8	2.8	30.3	0.8	3.4	24.4	0.9	3.9	20.0	0.9	4.4	16.6	1.0	5.0	13.6	1.1	5.7
60	103.2	0.6	1.4	72.5	0.7	1.9	53.4	0.7	2.4	41.7	0.8	2.8	33.0	0.8	3.4	26.6	0.9	3.9	21.8	0.9	4.5	18.1	1.0	5.0	14.9	1.1	5.7
65	111.8	0.6	1.4	78.5	0.7	1.9	57.8	0.7	2.4	45.1	0.8	2.8	35.8	0.8	3.4	28.9	0.9	3.9	23.6	0.9	4.5	19.6	1.0	5.0	16.2	1.1	5.7
70	120.4	0.6	1.4	84.6	0.7	1.9	62.3	0.7	2.4	48.6	0.8	2.8	38.6	0.8	3.4	31.1	0.9	3.9	25.4	0.9	4.5	21.1	1.0	5.0	17.7	1.1	5.6
75	129.0	0.6	1.4	90.6	0.7	1.9	66.7	0.7	2.4	52.1	0.8	2.8	41.3	0.8	3.4	33.3	0.9	3.9	27.2	0.9	4.5	22.6	1.0	5.0	19.0	1.1	5.6
80	137.6	0.6	1.4	96.7	0.7	1.9	71.2	0.7	2.4	55.5	0.8	2.8	44.1	0.8	3.4	35.5	0.9	3.9	29.1	0.9	4.5	24.1	1.0	5.0	20.2	1.1	5.6
85	146.2	0.6	1.4	102.7	0.7	1.9	75.6	0.7	2.4	59.0	0.8	2.8	46.8	0.8	3.4	37.7	0.9	3.9	30.9	0.9	4.5	25.6	1.0	5.0	21.5	1.1	5.6
90	154.8	0.6	1.4	108.7	0.7	1.9	80.0	0.7	2.4	62.5	0.8	2.8	49.6	0.8	3.4	39.9	0.9	3.9	32.7	0.9	4.5	27.1	1.0	5.0	22.8	1.1	5.6
95	163.4	0.6	1.4	114.8	0.7	1.9	84.5	0.7	2.4	65.9	0.8	2.8	52.3	0.8	3.4	42.2	0.9	3.9	34.5	0.9	4.5	28.6	1.0	5.0	24.0	1.1	5.6
100	172.0	0.6	1.4	120.8	0.7	1.9	88.9	0.7	2.4	69.4	0.8	2.8	55.1	0.8	3.4	44.4	0.9	3.9	36.3	0.9	4.5	30.1	1.0	5.0	25.3	1.1	5.6
105	180.6	0.6	1.4	126.9	0.7	1.9	93.4	0.7	2.4	72.9	0.8	2.8	57.8	0.8	3.4	46.6	0.9	3.9	38.1	0.9	4.5	31.6	1.0	5.0	26.5	1.1	5.6
110	189.2	0.6	1.4	132.9	0.7	1.9	97.8	0.7	2.4	76.3	0.8	2.8	60.6	0.8	3.4	48.8	0.9	3.9	39.9	0.9	4.5	33.1	1.0	5.0	27.8	1.1	5.6
115	197.8	0.6	1.4	138.9	0.7	1.9	102.3	0.7	2.4	79.8	0.8	2.8	63.3	0.8	3.4	51.0	0.9	3.9	41.7	0.9	4.5	34.6	1.0	5.0	29.0	1.1	5.6
120	206.4	0.6	1.4	145.0	0.7	1.9	106.7	0.7	2.4	83.3	0.8	2.8	66.1	0.8	3.4	53.3	0.9	3.9	43.6	0.9	4.5	36.1	1.0	5.0	30.2	1.1	5.7
125	215.0	0.6	1.4	151.0	0.7	1.9	111.2	0.7	2.4	86.8	0.8	2.8	68.8	0.8	3.4	55.5	0.9	3.9	45.4	0.9	4.5	37.6	1.0	5.0	31.5	1.1	5.7
130	223.7	0.6	1.4	157.1	0.7	1.9	115.6	0.7	2.4	90.2	0.8	2.8	71.6	0.8	3.4	57.7	0.9	3.9	47.2	0.9	4.5	39.1	1.0	5.0	32.7	1.1	5.7
135	232.3	0.6	1.4	163.1	0.7	1.9	120.1	0.7	2.4	93.7	0.8	2.8	74.3	0.8	3.4	59.9	0.9	3.9	49.0	0.9	4.5	40.6	1.0	5.0	34.0	1.1	5.7
140	240.9	0.6	1.4	169.1	0.7	1.9	124.5	0.7	2.4	97.2	0.8	2.8	77.1	0.8	3.4	62.1	0.9	3.9	50.8	0.9	4.5	42.1	1.0	5.0	35.2	1.1	5.7
145	249.5	0.6	1.4	175.2	0.7	1.9	129.0	0.7	2.4	100.6	0.8	2.8	79.8	0.8	3.4	64.3	0.9	3.9	52.6	0.9	4.5	43.6	1.0	5.0	36.5	1.1	5.7
150	258.1	0.6	1.4	181.2	0.7	1.9	133.4	0.7	2.4	104.1	0.8	2.8	82.6	0.8	3.4	66.6	0.9	3.9	54.4	0.9	4.5	45.1	1.0	5.0	37.8	1.1	5.7

RETARDANCE "D" AND "C"

NOTE: Width and Depth dimensions are in feet; Velocity measurements are in feet per second; Depth "D" does not include allowance for freeboard or settlement.

Table DV-14 Parabolic Diversion Design Chart (Retardance "D" and "C", Grade 6.00%)

V1 FOR RETARDANCE "D", TOP WIDTH (T), DEPTH (D), AND V2 FOR RETARDANCE "C"

Grade 6.00 Percent

Q CFS	V1=2.0			V1=2.5			V1=3.0			V1=3.5			V1=4.0			V1=4.5			V1=5.0			V1=5.5			V1=6.0		
	T	D	V2	T	D	V2	T	D	V2	T	D	V2	T	D	V2	T	D	V2	T	D	V2	T	D	V2	T	D	V2
5	10.6	0.5	1.3	7.3	0.6	1.8	5.3	0.6	2.3	4.0	0.7	2.8	2.9	0.8	3.2												
10	21.1	0.5	1.3	14.7	0.6	1.8	10.9	0.6	2.3	8.4	0.7	2.8	6.6	0.7	3.2	5.3	0.8	3.8	4.2	0.8	4.3						
15	31.6	0.5	1.3	22.1	0.6	1.8	16.3	0.6	2.3	12.7	0.6	2.7	10.1	0.7	3.3	8.2	0.7	3.8	6.6	0.8	4.3	5.4	0.9	4.9	4.3	1.0	5.5
20	42.1	0.5	1.3	29.5	0.6	1.8	21.7	0.6	2.3	17.0	0.6	2.7	13.6	0.7	3.2	11.1	0.7	3.7	9.0	0.8	4.3	7.4	0.8	4.9	6.1	0.9	5.5
25	52.7	0.5	1.3	36.8	0.6	1.8	27.1	0.6	2.3	21.2	0.6	2.8	17.0	0.7	3.2	13.9	0.7	3.8	11.3	0.8	4.3	9.3	0.8	4.9	7.8	0.9	5.5
30	63.2	0.5	1.3	44.2	0.6	1.8	32.5	0.6	2.3	25.4	0.6	2.8	20.4	0.7	3.2	16.6	0.7	3.8	13.7	0.8	4.3	11.3	0.8	4.9	9.4	0.9	5.5
35	73.7	0.5	1.3	51.6	0.6	1.8	38.0	0.6	2.3	29.7	0.6	2.8	23.8	0.7	3.2	19.4	0.7	3.8	16.0	0.8	4.3	13.4	0.8	4.9	11.1	0.9	5.5
40	84.2	0.5	1.3	58.9	0.6	1.8	43.4	0.6	2.3	33.9	0.6	2.8	27.2	0.7	3.3	22.2	0.7	3.8	18.3	0.8	4.3	15.3	0.8	4.9	12.7	0.9	5.5
45	94.8	0.5	1.3	66.3	0.6	1.8	48.8	0.6	2.3	38.2	0.6	2.8	30.7	0.7	3.3	24.9	0.7	3.8	20.6	0.8	4.3	17.2	0.8	4.9	14.5	0.9	5.4
50	105.3	0.5	1.3	73.6	0.6	1.8	54.2	0.6	2.3	42.4	0.6	2.8	34.1	0.7	3.3	27.7	0.7	3.8	22.8	0.8	4.3	19.1	0.8	4.9	16.1	0.9	5.4
55	115.8	0.5	1.3	81.0	0.6	1.8	59.7	0.6	2.3	46.6	0.6	2.8	37.5	0.7	3.3	30.5	0.7	3.8	25.1	0.8	4.3	21.0	0.8	4.9	17.7	0.9	5.4
60	126.4	0.5	1.3	88.4	0.6	1.8	65.1	0.6	2.3	50.9	0.6	2.8	40.9	0.7	3.3	33.3	0.7	3.8	27.4	0.8	4.3	22.9	0.8	4.9	19.3	0.9	5.4
65	136.9	0.5	1.3	95.7	0.6	1.8	70.5	0.6	2.3	55.1	0.6	2.8	44.3	0.7	3.3	36.0	0.7	3.8	29.7	0.8	4.3	24.8	0.8	4.9	20.9	0.9	5.4
70	147.4	0.5	1.3	103.1	0.6	1.8	75.9	0.6	2.3	59.3	0.6	2.8	47.7	0.7	3.3	38.8	0.7	3.8	32.0	0.8	4.3	26.7	0.8	4.9	22.5	0.9	5.4
75	158.0	0.5	1.3	110.5	0.6	1.8	81.3	0.6	2.3	63.6	0.6	2.8	51.1	0.7	3.3	41.6	0.7	3.8	34.3	0.8	4.3	28.6	0.8	4.9	24.1	0.9	5.4
80	168.5	0.5	1.3	117.8	0.6	1.8	86.8	0.6	2.3	67.8	0.6	2.8	54.5	0.7	3.3	44.3	0.7	3.8	36.5	0.8	4.3	30.5	0.8	4.9	25.7	0.9	5.5
85	179.0	0.5	1.3	125.2	0.6	1.8	92.2	0.6	2.3	72.0	0.6	2.8	57.9	0.7	3.3	47.1	0.7	3.8	38.8	0.8	4.3	32.4	0.8	4.9	27.3	0.9	5.5
90	189.6	0.5	1.3	132.6	0.6	1.8	97.6	0.6	2.3	76.3	0.6	2.8	61.3	0.7	3.3	49.9	0.7	3.8	41.1	0.8	4.3	34.3	0.8	4.9	28.9	0.9	5.5
95	200.1	0.5	1.3	139.9	0.6	1.8	103.0	0.6	2.3	80.5	0.6	2.8	64.7	0.7	3.3	52.6	0.7	3.8	43.4	0.8	4.3	36.2	0.8	4.9	30.5	0.9	5.5
100	210.6	0.5	1.3	147.3	0.6	1.8	108.5	0.6	2.3	84.8	0.6	2.8	68.1	0.7	3.3	55.4	0.7	3.8	45.7	0.8	4.3	38.1	0.8	4.9	32.1	0.9	5.5
105	221.1	0.5	1.3	154.6	0.6	1.8	113.9	0.6	2.3	89.0	0.6	2.8	71.5	0.7	3.3	58.2	0.7	3.8	47.9	0.8	4.3	40.0	0.8	4.9	33.7	0.9	5.5
110	231.7	0.5	1.3	162.0	0.6	1.8	119.3	0.6	2.3	93.2	0.6	2.8	74.9	0.7	3.3	60.9	0.7	3.8	50.2	0.8	4.3	41.9	0.8	4.9	35.3	0.9	5.5
115	242.2	0.5	1.3	169.4	0.6	1.8	124.7	0.6	2.3	97.5	0.6	2.8	78.3	0.7	3.3	63.7	0.7	3.8	52.5	0.8	4.3	43.8	0.8	4.9	36.9	0.9	5.5
120	252.7	0.5	1.3	176.7	0.6	1.8	130.2	0.6	2.3	101.7	0.6	2.8	81.7	0.7	3.3	66.5	0.7	3.8	54.8	0.8	4.3	45.7	0.8	4.9	38.5	0.9	5.5
125	263.3	0.5	1.3	184.1	0.6	1.8	135.6	0.6	2.3	106.0	0.6	2.8	85.1	0.7	3.3	69.3	0.7	3.8	57.1	0.8	4.3	47.6	0.8	4.9	40.1	0.9	5.5
130	273.8	0.5	1.3	191.5	0.6	1.8	141.0	0.6	2.3	110.2	0.6	2.8	88.5	0.7	3.3	72.0	0.7	3.8	59.4	0.8	4.3	49.5	0.8	4.9	41.7	0.9	5.5
135	284.3	0.5	1.3	198.8	0.6	1.8	146.4	0.6	2.3	114.4	0.6	2.8	91.9	0.7	3.3	74.8	0.7	3.8	61.6	0.8	4.3	51.4	0.8	4.9	43.3	0.9	5.5
140	294.9	0.5	1.3	206.2	0.6	1.8	151.8	0.6	2.3	118.7	0.6	2.8	95.3	0.7	3.3	77.6	0.7	3.8	63.9	0.8	4.3	53.3	0.8	4.9	44.9	0.9	5.5
145	305.4	0.5	1.3	213.6	0.6	1.8	157.3	0.6	2.3	122.9	0.6	2.8	98.7	0.7	3.3	80.3	0.7	3.8	66.2	0.8	4.3	55.2	0.8	4.9	46.5	0.9	5.5
150	315.9	0.5	1.3	220.9	0.6	1.8	162.7	0.6	2.3	127.1	0.6	2.8	102.1	0.7	3.3	83.1	0.7	3.8	68.5	0.8	4.3	57.1	0.8	4.9	48.1	0.9	5.5

RETARDANCE "D" AND "C"

NOTE: Width and Depth dimensions are in feet; Velocity measurements are in feet per second:
Depth "D" does not include allowance for freeboard or settlement.

Table DV-15 Parabolic Diversion Design Chart (Retardance "D" and "C", Grade 8.00%)

V1 FOR RETARDANCE "D", TOP WIDTH (T), DEPTH' (D), AND V2 FOR RETARDANCE "C"

Grade 8.00 Percent

Q̄ CFS	V1=2.0			V1=2.5			V1=3.0			V1=3.5			V1=4.0			V1=4.5			V1=5.0			V1=5.5			V1=6.0		
	T̄	D̄	V̄2	T̄	D̄	V̄2	T̄	D̄	V̄2	T̄	D̄	V̄2	T̄	D̄	V̄2	T̄	D̄	V̄2	T̄	D̄	V̄2	T̄	D̄	V̄2	T̄	D̄	V̄2
5	12.0	0.5	1.3	8.5	0.5	1.7	6.2	0.5	2.2	4.6	0.6	2.7	3.7	0.6	3.2	2.9	0.7	3.6									
10	24.1	0.5	1.3	16.9	0.5	1.7	12.6	0.5	2.2	9.6	0.6	2.7	7.8	0.6	3.2	6.3	0.6	3.7	5.1	0.7	4.2	4.2	0.8	4.8	3.2	0.9	5.3
15	36.1	0.5	1.3	25.3	0.5	1.7	18.9	0.5	2.2	14.4	0.6	2.7	11.8	0.6	3.2	9.7	0.6	3.7	7.9	0.7	4.2	6.5	0.7	4.8	5.4	0.8	5.3
20	48.1	0.5	1.3	33.8	0.5	1.7	25.2	0.5	2.2	19.2	0.6	2.7	15.8	0.6	3.2	12.9	0.6	3.7	10.7	0.7	4.2	8.8	0.7	4.8	7.4	0.8	5.3
25	60.1	0.5	1.3	42.2	0.5	1.7	31.5	0.5	2.2	24.0	0.6	2.7	19.7	0.6	3.2	16.2	0.6	3.7	13.4	0.7	4.2	11.2	0.7	4.7	9.3	0.8	5.3
30	72.1	0.5	1.3	50.6	0.5	1.7	37.8	0.5	2.2	28.8	0.6	2.7	23.6	0.6	3.2	19.4	0.6	3.7	16.1	0.7	4.2	13.5	0.7	4.8	11.3	0.7	5.3
35	84.1	0.5	1.3	59.1	0.5	1.7	44.1	0.5	2.2	33.6	0.6	2.7	27.6	0.6	3.2	22.6	0.6	3.7	18.7	0.7	4.2	15.7	0.7	4.8	13.3	0.7	5.3
40	96.2	0.5	1.3	67.5	0.5	1.7	50.4	0.5	2.2	38.4	0.6	2.7	31.5	0.6	3.2	25.8	0.6	3.7	21.4	0.7	4.2	17.9	0.7	4.8	15.2	0.7	5.3
45	108.2	0.5	1.3	76.0	0.5	1.7	56.7	0.5	2.2	43.2	0.6	2.7	35.4	0.6	3.2	29.0	0.6	3.7	24.1	0.7	4.2	20.2	0.7	4.8	17.1	0.7	5.3
50	120.2	0.5	1.3	84.4	0.5	1.7	63.0	0.5	2.2	48.0	0.6	2.7	39.4	0.6	3.2	32.3	0.6	3.7	26.8	0.7	4.2	22.4	0.7	4.8	19.0	0.7	5.3
55	132.2	0.5	1.3	92.8	0.5	1.7	69.3	0.5	2.2	52.8	0.6	2.7	43.3	0.6	3.2	35.5	0.6	3.7	29.4	0.7	4.2	24.7	0.7	4.8	20.9	0.7	5.3
60	144.2	0.5	1.3	101.3	0.5	1.7	75.6	0.5	2.2	57.6	0.6	2.7	47.2	0.6	3.2	38.7	0.6	3.7	32.1	0.7	4.2	26.9	0.7	4.8	22.8	0.7	5.3
65	156.3	0.5	1.3	109.7	0.5	1.7	81.8	0.5	2.2	62.4	0.6	2.7	51.2	0.6	3.2	41.9	0.6	3.7	34.8	0.7	4.2	29.1	0.7	4.8	24.7	0.7	5.3
70	168.3	0.5	1.3	118.2	0.5	1.7	88.1	0.5	2.2	67.2	0.6	2.7	55.1	0.6	3.2	45.2	0.6	3.7	37.5	0.7	4.2	31.4	0.7	4.8	26.6	0.7	5.3
75	180.3	0.5	1.3	126.6	0.5	1.7	94.4	0.5	2.2	72.0	0.6	2.7	59.0	0.6	3.2	48.4	0.6	3.7	40.1	0.7	4.2	33.6	0.7	4.8	28.5	0.7	5.3
80	192.3	0.5	1.3	135.0	0.5	1.7	100.7	0.5	2.2	76.8	0.6	2.7	63.0	0.6	3.2	51.6	0.6	3.7	42.8	0.7	4.2	35.9	0.7	4.8	30.3	0.7	5.3
85	204.3	0.5	1.3	143.5	0.5	1.7	107.0	0.5	2.2	81.6	0.6	2.7	66.9	0.6	3.2	54.9	0.6	3.7	45.5	0.7	4.2	38.1	0.7	4.8	32.2	0.7	5.3
90	216.4	0.5	1.3	151.9	0.5	1.7	113.3	0.5	2.2	86.4	0.6	2.7	70.8	0.6	3.2	58.1	0.6	3.7	48.1	0.7	4.2	40.3	0.7	4.8	34.1	0.7	5.3
95	228.4	0.5	1.3	160.3	0.5	1.7	119.6	0.5	2.2	91.2	0.6	2.7	74.8	0.6	3.2	61.3	0.6	3.7	50.8	0.7	4.2	42.6	0.7	4.8	36.0	0.7	5.3
100	240.4	0.5	1.3	168.8	0.5	1.7	125.9	0.5	2.2	96.0	0.6	2.7	78.7	0.6	3.2	64.5	0.6	3.7	53.5	0.7	4.2	44.8	0.7	4.8	37.9	0.7	5.3
105	252.4	0.5	1.3	177.2	0.5	1.7	132.2	0.5	2.2	100.8	0.6	2.7	82.6	0.6	3.2	67.8	0.6	3.7	56.2	0.7	4.2	47.1	0.7	4.8	39.8	0.7	5.3
110	264.4	0.5	1.3	185.7	0.5	1.7	138.5	0.5	2.2	105.6	0.6	2.7	86.6	0.6	3.2	71.0	0.6	3.7	58.8	0.7	4.2	49.3	0.7	4.8	41.7	0.7	5.3
115	276.5	0.5	1.3	194.1	0.5	1.7	144.8	0.5	2.2	110.4	0.6	2.7	90.5	0.6	3.2	74.2	0.6	3.7	61.5	0.7	4.2	51.5	0.7	4.8	43.6	0.7	5.3
120	288.5	0.5	1.3	202.5	0.5	1.7	151.1	0.5	2.2	115.2	0.6	2.7	94.4	0.6	3.2	77.4	0.6	3.7	64.2	0.7	4.2	53.8	0.7	4.8	45.5	0.7	5.3
125	300.5	0.5	1.3	211.0	0.5	1.7	157.4	0.5	2.2	120.0	0.6	2.7	98.4	0.6	3.2	80.7	0.6	3.7	66.9	0.7	4.2	56.0	0.7	4.8	47.4	0.7	5.3
130	312.5	0.5	1.3	219.4	0.5	1.7	163.7	0.5	2.2	124.8	0.6	2.7	102.3	0.6	3.2	83.9	0.6	3.7	69.5	0.7	4.2	58.3	0.7	4.8	49.3	0.7	5.3
135	324.5	0.5	1.3	227.9	0.5	1.7	170.0	0.5	2.2	129.6	0.6	2.7	106.2	0.6	3.2	87.1	0.6	3.7	72.2	0.7	4.2	60.5	0.7	4.8	51.2	0.7	5.3
140	336.6	0.5	1.3	236.3	0.5	1.7	176.3	0.5	2.2	134.4	0.6	2.7	110.2	0.6	3.2	90.3	0.6	3.7	74.9	0.7	4.2	62.7	0.7	4.8	53.1	0.7	5.3
145	348.6	0.5	1.3	244.7	0.5	1.7	182.6	0.5	2.2	139.2	0.6	2.7	114.1	0.6	3.2	93.6	0.6	3.7	77.6	0.7	4.2	65.0	0.7	4.8	55.0	0.7	5.3
150	360.6	0.5	1.3	253.2	0.5	1.7	188.9	0.5	2.2	144.0	0.6	2.7	118.0	0.6	3.2	96.8	0.6	3.7	80.2	0.7	4.2	67.2	0.7	4.8	56.9	0.7	5.3

RETARDANCE "D" AND "C"

NOTE: Width and Depth dimensions are in feet; Velocity measurements are in feet per second
Depth "D" does not include allowance for freeboard or settlement

Table DV-16 Parabolic Diversion Design Chart (Retardance "D" and "C", Grade 10.00%)

V1 FOR RETARDANCE "D", TOP WIDTH (T), DEPTH (D), AND V2 FOR RETARDANCE "C"

Grade 10.00 Percent

Q CFS	V1=2.0			V1=2.5			V1=3.0			V1=3.5			V1=4.0			V1=4.5			V1=5.0			V1=5.5			V1=6.0		
	T	D	V2	T	D	V2	T	D	V2	T	D	V2	T	D	V2	T	D	V2	T	D	V2	T	D	V2	T	D	V2
5	13.3	0.4	1.3	9.4	0.5	1.7	6.8	0.5	2.2	5.3	0.5	2.6	4.1	0.6	3.2	3.4	0.6	3.6	2.6	0.7	4.1						
10	26.6	0.4	1.3	18.7	0.5	1.7	13.8	0.5	2.2	10.9	0.5	2.6	8.5	0.6	3.2	7.1	0.6	3.6	5.9	0.6	4.1	4.9	0.7	4.7	4.0	0.7	5.3
15	39.9	0.4	1.3	28.0	0.5	1.7	20.7	0.5	2.2	16.3	0.5	2.6	12.8	0.6	3.2	10.9	0.6	3.6	9.0	0.6	4.1	7.5	0.6	4.7	6.3	0.7	5.2
20	53.2	0.4	1.3	37.4	0.5	1.7	27.6	0.5	2.2	21.7	0.5	2.7	17.0	0.6	3.2	14.5	0.6	3.6	12.1	0.6	4.1	10.2	0.6	4.6	8.5	0.7	5.2
25	66.5	0.4	1.3	46.7	0.5	1.7	34.5	0.5	2.2	27.1	0.5	2.7	21.3	0.6	3.2	18.1	0.6	3.6	15.1	0.6	4.1	12.7	0.6	4.7	10.8	0.7	5.2
30	79.8	0.4	1.3	56.1	0.5	1.7	41.4	0.5	2.2	32.5	0.5	2.7	25.5	0.6	3.2	21.7	0.6	3.6	18.1	0.6	4.1	15.2	0.6	4.7	12.9	0.7	5.2
35	93.1	0.4	1.3	65.4	0.5	1.7	48.3	0.5	2.2	37.9	0.5	2.7	29.8	0.6	3.2	25.3	0.6	3.6	21.1	0.6	4.1	17.8	0.6	4.7	15.1	0.7	5.2
40	106.4	0.4	1.3	74.7	0.5	1.7	55.2	0.5	2.2	43.3	0.5	2.7	34.0	0.6	3.2	29.0	0.6	3.6	24.1	0.6	4.1	20.3	0.6	4.7	17.2	0.7	5.2
45	119.7	0.4	1.3	84.1	0.5	1.7	62.1	0.5	2.2	48.8	0.5	2.7	38.3	0.6	3.2	32.6	0.6	3.6	27.2	0.6	4.1	22.8	0.6	4.7	19.4	0.7	5.2
50	133.0	0.4	1.3	93.4	0.5	1.7	69.0	0.5	2.2	54.2	0.5	2.7	42.5	0.6	3.2	36.2	0.6	3.6	30.2	0.6	4.1	25.4	0.6	4.7	21.5	0.7	5.2
55	146.3	0.4	1.3	102.8	0.5	1.7	75.9	0.5	2.2	59.6	0.5	2.7	46.8	0.6	3.2	39.8	0.6	3.6	33.2	0.6	4.1	27.9	0.6	4.7	23.7	0.7	5.2
60	159.6	0.4	1.3	112.1	0.5	1.7	82.8	0.5	2.2	65.0	0.5	2.7	51.0	0.6	3.2	43.4	0.6	3.6	36.2	0.6	4.1	30.5	0.6	4.7	25.9	0.7	5.2
65	172.9	0.4	1.3	121.4	0.5	1.7	89.7	0.5	2.2	70.4	0.5	2.7	55.3	0.6	3.2	47.1	0.6	3.6	39.2	0.6	4.1	33.0	0.6	4.7	28.0	0.7	5.2
70	186.2	0.4	1.3	130.8	0.5	1.7	96.6	0.5	2.2	75.8	0.5	2.7	59.5	0.6	3.2	50.7	0.6	3.6	42.2	0.6	4.1	35.5	0.6	4.7	30.2	0.7	5.2
75	199.5	0.4	1.3	140.1	0.5	1.7	103.5	0.5	2.2	81.2	0.5	2.7	63.8	0.6	3.2	54.3	0.6	3.6	45.2	0.6	4.1	38.1	0.6	4.7	32.3	0.7	5.2
80	212.8	0.4	1.3	149.5	0.5	1.7	110.5	0.5	2.2	86.7	0.5	2.7	68.0	0.6	3.2	57.9	0.6	3.6	48.3	0.6	4.1	40.6	0.6	4.7	34.5	0.7	5.2
85	226.1	0.4	1.3	158.8	0.5	1.7	117.4	0.5	2.2	92.1	0.5	2.7	72.3	0.6	3.2	61.5	0.6	3.6	51.3	0.6	4.1	43.1	0.6	4.7	36.6	0.7	5.2
90	239.4	0.4	1.3	168.1	0.5	1.7	124.3	0.5	2.2	97.5	0.5	2.7	76.5	0.6	3.2	65.2	0.6	3.6	54.3	0.6	4.1	45.7	0.6	4.7	38.8	0.7	5.2
95	252.7	0.4	1.3	177.5	0.5	1.7	131.2	0.5	2.2	102.9	0.5	2.7	80.8	0.6	3.2	68.8	0.6	3.6	57.3	0.6	4.1	48.2	0.6	4.7	40.9	0.7	5.2
100	266.0	0.4	1.3	186.8	0.5	1.7	138.1	0.5	2.2	108.3	0.5	2.7	85.0	0.6	3.2	72.4	0.6	3.6	60.3	0.6	4.1	50.7	0.6	4.7	43.1	0.7	5.2
105	279.3	0.4	1.3	196.2	0.5	1.7	145.0	0.5	2.2	113.7	0.5	2.7	89.3	0.6	3.2	76.0	0.6	3.6	63.3	0.6	4.1	53.3	0.6	4.7	45.2	0.7	5.2
110	292.6	0.4	1.3	205.5	0.5	1.7	151.9	0.5	2.2	119.2	0.5	2.7	93.5	0.6	3.2	79.6	0.6	3.6	66.4	0.6	4.1	55.8	0.6	4.7	47.4	0.7	5.2
115	305.9	0.4	1.3	214.9	0.5	1.7	158.8	0.5	2.2	124.6	0.5	2.7	97.8	0.6	3.2	83.3	0.6	3.6	69.4	0.6	4.1	58.3	0.6	4.7	49.5	0.7	5.3
120	319.2	0.4	1.3	224.2	0.5	1.7	165.7	0.5	2.2	130.0	0.5	2.7	102.0	0.6	3.2	86.9	0.6	3.6	72.4	0.6	4.1	60.9	0.6	4.7	51.7	0.7	5.3
125	332.5	0.4	1.3	233.5	0.5	1.7	172.6	0.5	2.2	135.4	0.5	2.7	106.3	0.6	3.2	90.5	0.6	3.6	75.4	0.6	4.1	63.4	0.6	4.7	53.8	0.7	5.3
130	345.8	0.4	1.3	242.9	0.5	1.7	179.5	0.5	2.2	140.8	0.5	2.7	110.5	0.6	3.2	94.1	0.6	3.6	78.4	0.6	4.1	66.0	0.6	4.7	56.0	0.7	5.3
135	359.1	0.4	1.3	252.2	0.5	1.7	186.4	0.5	2.2	146.2	0.5	2.7	114.8	0.6	3.2	97.7	0.6	3.6	81.4	0.6	4.1	68.5	0.6	4.7	58.1	0.7	5.3
140	372.4	0.4	1.3	261.6	0.5	1.7	193.3	0.5	2.2	151.7	0.5	2.7	119.0	0.6	3.2	101.3	0.6	3.6	84.4	0.6	4.1	71.0	0.6	4.7	60.3	0.7	5.3
145	385.7	0.4	1.3	270.9	0.5	1.7	200.2	0.5	2.2	157.1	0.5	2.7	123.3	0.6	3.2	105.0	0.6	3.6	87.5	0.6	4.1	73.6	0.6	4.7	62.5	0.7	5.3
150	399.0	0.4	1.3	280.2	0.5	1.7	207.1	0.5	2.2	162.5	0.5	2.7	127.5	0.6	3.2	108.6	0.6	3.6	90.5	0.6	4.1	76.1	0.6	4.7	64.6	0.7	5.3

RETARDANCE "D" AND "C"

NOTE: Width and Depth dimensions are in feet; Velocity measurements are in feet per second;
Depth "D" does not include allowance for freeboard or settlement.

This Page Intentionally Left Blank

G. Grass Swale (GS)

Grass Swale (GS)

Practice Description

A grass swale is a natural or constructed channel that is shaped or graded to required dimensions and established in suitable vegetation for the stable conveyance of runoff without causing damage to the channel by erosion. This practice applies to sites where concentrated runoff will cause erosion damage, a vegetative lining provides sufficient stability for the channel as designed, and space is available for a relatively large cross section. Typical situations where concentrated flow areas are addressed with a grass swale include roadside ditches, channels at property boundaries, outlets for diversions and other concentrated flow areas subject to channel erosion. Grassed swales are generally considered permanent structures but may be used as a temporary measure.

Planning Considerations

Grass swales should be carefully built to the design cross section, shape and dimensions. Swales are hydraulic structures and as such depend upon the hydraulic parameters to function satisfactorily. Vegetated swales should be well established before large flows are permitted in the channel.

The design of a channel cross section and lining is based primarily upon the volume and velocity of flow expected in the channel. This practice covers grassed swales with low velocity flows (generally less than 5 ft/sec). Where high velocities are anticipated lined swales should be used (see Lined Swale practice or Riprap-lined Swale practice). Lined swales should also be used where there is continuous flow in the swale, which would prevent establishment of vegetation within the flow area.

Besides the primary design considerations of capacity and velocity, a number of other important factors should be taken into account when selecting a cross section (Figure GS-1). These factors include land availability, compatibility with land use and surrounding environment, safety, maintenance requirements outlet conditions, etc.

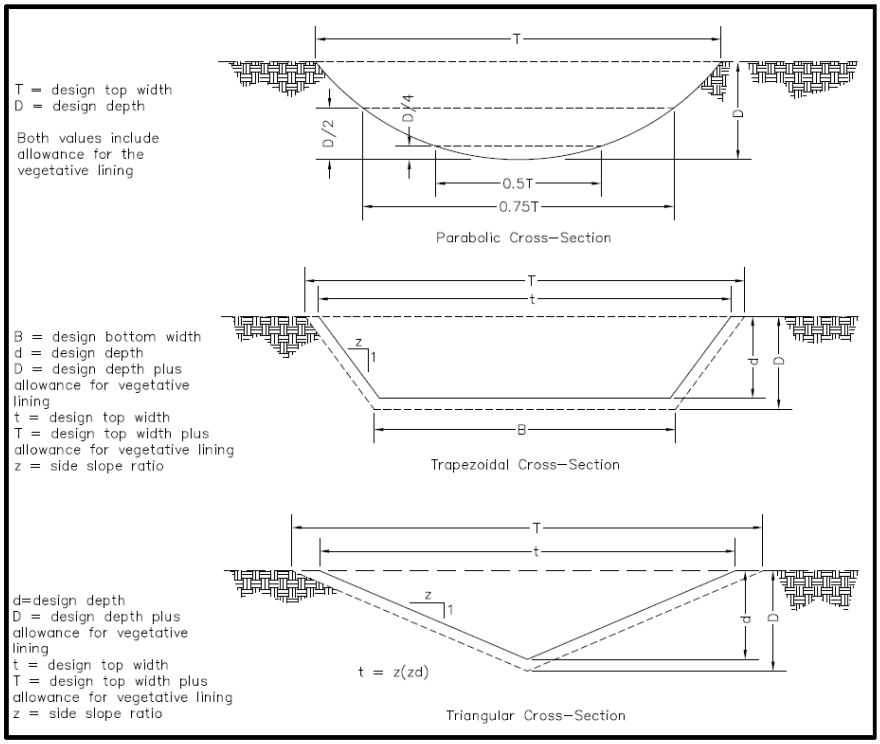

Figure GS-1 Typical Grass Swale Cross section

Triangular Shaped Ditches

Triangular shaped ditches are generally used where the quantity of water to be handled is relatively small, such as along roadsides. A triangular grass swale will suffice where velocities in the ditch are low.

Parabolic Channels

Parabolic channels are often used where the quantity of water to be handled is larger and where space is available for a wide, shallow channel with low velocity flow.

Trapezoidal Channels

Trapezoidal channels are often used where the quantity of water to be carried is large and conditions require that it be carried at a relatively high velocity. Trapezoidal ditches lined with concrete, riprap, or others similar materials are considered lined swales or riprap lined swales. In some cases, erosion control

blankets (see Erosion Control Blanket practice) and high end hydraulic mulch (see Mulching practice) can be used to establish vegetation.

Other Considerations

Outlet conditions for all channels should be considered. Appropriate measures must be taken to dissipate the energy of the flow to prevent scour at the outlet of the swale.

Grass swales should be protected from erosion by concentrated flows. The methods of protecting grass swales would include, but not be limited to the following:

- Vegetation.
- Biodegradable linings and vegetation.

The type and intensity of the protective linings will determine the design of the grass swale.

If velocities exceed stable velocities, for vegetated swales or vegetation with biodegradable linings, then other linings should be used (see Lined Swale or Riprap-lined Swale practice).

The time of the year should be considered when planning grass swales. Grass swales that are seeded to establish vegetation should not be planned for construction during late fall, winter or early spring. Grass swales constructed during mid-summer to early fall may need temporary seeding followed by permanent seeding at the recommended times. The vegetation species should be recommended for the area of the state that it is planned.

Design Criteria

Capacity

Note: This design example uses the Permissible Velocity approach. Grass swale design using the Tractive Stress approach can also be used but is not discussed in this document.

Grass swales shall be designed to convey the peak rate of runoff as shown in Table GS-1. Adjustments should be made for release rates from structures and other drainage facilities. Grass swales shall also be designed to comply with local stormwater ordinances. Grass swales should be designed for greater capacity whenever there is danger of flooding or out of bank flow cannot be tolerated.

Table GS-1 Design Frequency for Grassed Swale

Grass Swale Type	Typical Area of Protection	24 Hour Design Storm Frequency
Temporary Swale	Construction Areas	2-year
	Building Sites	5-year
Permanent Swale	Agricultural Land	10-year
	Reclaimed Mined Land	10-year
	Isolated Buildings	10-year
	Urban areas, Residential, School, Industrial Areas, Recreation Areas, etc.	10-year

Peak rates of runoff values used to determine the capacity requirements should be calculated using accepted engineering methods. Some accepted methods are:

- Natural Resources Conservation Service, National Engineering Handbook Series, Part 650, Engineering Field Handbook, Chapter 2, Estimating Runoff.
- Natural Resources Conservation Service formerly Soil Conservation Service, Technical Release 55, Urban Hydrology for Small Watersheds.
- Other comparable methods.

Grade of Grass Swale

After selecting a location for the grassed swale that will minimize the impacts to the site and maximize the intended use, the grade in the grass swales should be determined. The grade in feet per 100 feet of length can be determined from a topographic map of the site or from a detailed survey of the planned grassed swale location.

Retardance

The grass species used and the degree of maintenance planned for the vegetation determines the retardance of the swale (see Table GS-2).

Generally, the retardance used for the design of grassed swales should be “D” and “C” to produce a stable velocity and adequate capacity to carry the design storm.

Table GS-2 Retardance for Grassed Swales

Retardance	Species [1]	Cover Condition
A	Reed Canarygrass	Excellent stand, tall (average 36”)
	Yellow Bluestem Ischaemum	Excellent stand, tall (average 36”)
B	Smooth Bromegrass	Good stand, mowed (average 12 to 15”)
	Bermudagrass	Good stand, tall (average 12)
	Native Grass mixture (Little Bluestem, Blue Grama, and other long and short Midwest Grasses)	Good stand, unmowed
	Tall Fescue	Good stand, unmowed (average 18”)
	Lespedeza Sericea	Good stand, not woody, tall (average 19”)
	Grass-Legume mixture-Timothy, smooth Bromegrass, or Orchardgrass	Good stand, uncut (average 20”)
	Reed Canarygrass	Good stand, mowed (average 12 to 15”)
	Tall Fescue, with Bird’s Foot Trefoil or Ladino Clover	Good stand, uncut (average 18”)
	Blue Grama	Good stand, uncut (average 13”)
C	Bahiagrass	Good stand, uncut (average 6 to 8”)
	Bermudagrass	Good stand, mowed (average 6”)
	Redtop	Good stand, headed (15 to 20)
	Grass-legume mixture-summer (Orchardgrass, Redtop, Italian Ryegrass, and Common Lespedeza)	Good stand, uncut (6 to 8”)
	Centipedegrass	Very dense cover (average 6”)
	Kentucky Bluegrass	Good stand, headed (6 to 12”)
D	Bermudagrass	Good stand, cut to 2.5” height
	Red Fescue	Good stand, headed (12 to 18”)
	Buffalograss	Good stand, uncut (3 to 6”)
	Grass-Legume mixture-fall, spring (Orchard Grass, Redtop, Italian Ryegrass, and Common Lespedeza)	Good stand, uncut (4 to 5”)
	Lespedeza Sericea	After cutting to 2” height. Very good stand before cutting
E	Bermudagrass	Good stand, cut to 1.5” height.
	Bermudagrass	Burned stubble

1/ Species to establish should be selected based on suitability of soil and expected management.

Velocities

Classify the soil where the swale is to be constructed into erosion resistant cohesive (clayey) fine and coarse grained soils or easily eroded noncohesive silt, clays and sands.

Determine the type of vegetative cover to be established in the swale.

Use the swale grade, cover and soil erodibility to determine permissible velocity using Table GS-3.

Table GS-3 Permissible Velocities in Grassed Swales

Cover	Slope Range[2]	Permissible Velocity[1] Erosion Resistant Soils[3] (clayey)	Easily Eroded Soils[4] (sandy)
	percent	ft/sec	ft/sec
Bermudagrass	< 5	8	6
	5-10	7	4
	over 10	6	3
Bahiagrass	<5	7	5
Tall Fescue	5-10	6	4
	over 10	5	3
Sericea Lespedeza **Weeping Lovegrass**	<5[5]	3.5	2.5

[1]Use velocities exceeding (5ft/sec) only where good covers and proper maintenance can be obtained.
[2]Do not use on slopes steeper than 10 percent except for vegetated side slopes in combination with a stone, concrete, or highly resistant vegetative center section.
[3]Cohesive (clayey) fine-grain soils and coarse-grain soils with cohesive fines with a plasticity index of 10 to 40 (CL, CH, SC, and CG).
[4] Soils that do not meet requirements for erosion-resistant soils.
[5] Do not use on slopes steeper than 5 percent except for vegetated side slopes in combination with a stone, concrete, or highly resistant vegetative center section.

Swale Dimensions

The swale may be triangular shaped, parabolic or trapezoidal as discussed in the planning considerations of this standard and shown in Figure GS-1.

Using the peak discharge, swale grade, permissible velocity and retardance, parabolic dimensions can be determined using Table GS-4, Sheets 1 through 14.

Design dimensions for triangular shaped and trapezoidal shaped swales can be determined using Manning's equation or other accepted engineering designs.

The design water surface elevation of a channel receiving water from other tributary sources shall be equal to or less than the design water surface elevation of the contributing source. The design water surface elevation of contributing and receiving waters should be the same, whenever practical.

A minimum depth may be necessary to provide adequate outlets for subsurface drains and tributary channels.

Drainage

Polyethylene drainage tubing, tile or other suitable subsurface drainage measures shall be provided for sites having high water tables or seepage problems.

Freeboard

The minimum freeboard is 0.25 feet in depth. Freeboard is not required on grass swales with less than 1% slope and where out-of-bank flow will not be damaging and can be tolerated in the normal operation at the site.

Table GS-4 Parabolic Grass Swale Design Sheet 1 of 14

V1 FOR RETARDANCE "D", TOP WIDTH (T), DEPTH (D), AND V2 FOR RETARDANCE "C"

Grade 0.25 Percent

Q CFS	V1=2.0			V1=2.5			V1=3.0			V1=3.5			V1=4.0			V1=4.5			V1=5.0			V1=5.5			V1=6.0		
	T	D	V2	T	D	V2	T	D	V2	T	D	V2	T	D	V2	T	D	V2	T	D	V2	T	D	V2	T	D	V2
5																											
10																											
15																											
20																											
25	9.3	2.3	1.7																								
30	11.7	2.2	1.8																								
35	14.1	2.1	1.7																								
40	16.3	2.1	1.8																								
45	18.5	2.1	1.8	10.4	2.8	2.3																					
50	20.7	2.1	1.8	12.3	2.6	2.3																					
55	22.9	2.1	1.8	13.8	2.6	2.3																					
60	25.0	2.0	1.8	15.3	2.5	2.3																					
65	27.2	2.0	1.8	16.8	2.5	2.3	10.4	3.4	2.8																		
70	29.3	2.0	1.8	18.2	2.5	2.3	12.1	3.1	2.8																		
75	31.9	2.0	1.7	19.7	2.4	2.3	13.5	3.0	2.8																		
80	34.0	2.0	1.7	21.1	2.4	2.3	14.7	2.9	2.8																		
85	36.1	2.0	1.7	22.5	2.4	2.3	15.8	2.9	2.8																		
90	38.2	2.0	1.7	23.9	2.4	2.3	16.9	2.8	2.8																		
95	40.3	2.0	1.7	25.3	2.4	2.3	18.0	2.8	2.8																		
100	42.4	2.0	1.7	26.7	2.4	2.3	19.1	2.8	2.8																		
105	44.6	2.0	1.7	28.1	2.4	2.3	20.2	2.8	2.8																		
110	46.7	2.0	1.7	29.5	2.4	2.3	21.3	2.8	2.8	12.9	3.8	3.4															
115	48.8	2.0	1.7	30.8	2.4	2.3	22.3	2.8	2.8	14.0	3.7	3.4															
120	50.9	2.0	1.7	32.2	2.4	2.3	23.4	2.8	2.8	15.3	3.5	3.4															
125	53.0	2.0	1.8	33.6	2.4	2.3	24.4	2.8	2.8	16.1	3.5	3.4															
130	55.1	2.0	1.8	35.0	2.4	2.3	25.5	2.8	2.8	16.9	3.4	3.4															
135	57.3	2.0	1.8	36.4	2.4	2.3	26.5	2.7	2.8	17.7	3.4	3.4															
140	59.4	2.0	1.8	38.3	2.4	2.3	27.6	2.7	2.8	18.5	3.4	3.4															
145	61.5	2.0	1.8	39.7	2.4	2.3	28.6	2.7	2.8	19.3	3.3	3.4															
150	63.6	2.0	1.8	41.1	2.4	2.3	29.6	2.7	2.8	20.1	3.3	3.4															

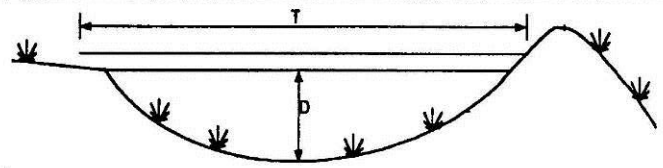

T = Top width, tall vegetation
D = Depth, tall vegetation
V2 = Design velocity, tall vegetation
V1 = Permissible velocity, short vegetation

RETARDANCE "D" AND "C"

NOTE: Width and Depth dimensions are in feet; Velocity measurements are in feet per second; Depth "D" does not include allowance for freeboard or settlement.

Table GS-4 Parabolic Grass Swale Design Sheet 2 of 14

V1 FOR RETARDANCE "D", TOP WIDTH (T), DEPTH (D), AND V2 FOR RETARDANCE "C"

Grade 0.50 Percent

Q CFS	V1=2.0			V1=2.5			V1=3.0			V1=3.5			V1=4.0			V1=4.5			V1=5.0			V1=5.5			V1=6.0		
	T	D	V2	T	D	V2	T	D	V2	T	D	V2	T	D	V2	T	D	V2	T	D	V2	T	D	V2	T	D	V2
5																											
10																											
15	8.4	1.6	1.7																								
20	11.7	1.5	1.7	7.1	2.0	2.2																					
25	14.9	1.5	1.7	9.7	1.8	2.2																					
30	18.0	1.5	1.7	12.0	1.7	2.2																					
35	21.0	1.5	1.7	14.2	1.7	2.2	9.3	2.1	2.7																		
40	24.4	1.5	1.7	16.3	1.7	2.2	10.9	2.0	2.7																		
45	27.4	1.5	1.7	18.5	1.7	2.2	12.5	2.0	2.7																		
50	30.5	1.5	1.7	20.6	1.7	2.2	14.1	1.9	2.7	8.7	2.6	3.3															
55	33.5	1.5	1.7	22.7	1.7	2.2	15.7	1.9	2.7	10.4	2.4	3.3															
60	36.6	1.5	1.7	24.8	1.7	2.2	17.2	1.9	2.7	11.7	2.3	3.3															
65	39.6	1.5	1.7	27.3	1.7	2.2	18.8	1.9	2.7	12.9	2.3	3.3															
70	42.6	1.5	1.7	29.4	1.7	2.2	20.3	1.9	2.7	14.0	2.2	3.3	9.8	2.8	3.8												
75	45.7	1.5	1.7	31.4	1.7	2.2	21.8	1.9	2.7	15.2	2.2	3.3	11.3	2.7	3.8												
80	48.7	1.5	1.7	33.5	1.7	2.2	23.3	1.9	2.7	16.3	2.2	3.3	12.2	2.6	3.8												
85	51.7	1.5	1.7	35.6	1.6	2.2	24.8	1.9	2.7	17.4	2.2	3.3	13.2	2.5	3.8												
90	54.8	1.5	1.7	37.7	1.6	2.2	26.3	1.9	2.7	18.5	2.2	3.3	14.2	2.5	3.8												
95	57.8	1.5	1.7	39.8	1.6	2.2	27.8	1.9	2.7	19.6	2.2	3.3	15.1	2.5	3.8												
100	60.9	1.5	1.7	41.9	1.6	2.2	29.7	1.9	2.7	20.7	2.2	3.3	16.0	2.5	3.8	11.0	3.2	4.3									
105	63.9	1.5	1.7	44.0	1.6	2.2	31.2	1.9	2.7	21.8	2.2	3.3	16.9	2.5	3.8	12.3	3.0	4.3									
110	66.9	1.5	1.7	46.1	1.6	2.2	32.6	1.9	2.7	22.9	2.2	3.3	17.8	2.4	3.8	13.1	2.9	4.3									
115	70.0	1.5	1.7	48.1	1.6	2.2	34.1	1.9	2.7	24.0	2.1	3.3	18.7	2.4	3.8	13.9	2.9	4.3									
120	73.0	1.5	1.7	50.2	1.6	2.2	35.6	1.9	2.7	25.1	2.1	3.3	19.6	2.4	3.8	14.6	2.9	4.3									
125	76.1	1.5	1.7	52.3	1.6	2.2	37.1	1.9	2.7	26.2	2.1	3.3	20.5	2.4	3.8	15.4	2.8	4.3									
130	79.1	1.5	1.7	54.4	1.6	2.2	38.5	1.9	2.7	27.3	2.1	3.3	21.3	2.4	3.8	16.1	2.8	4.3									
135	82.1	1.5	1.7	56.5	1.6	2.2	40.0	1.9	2.7	28.4	2.1	3.3	22.2	2.4	3.8	16.9	2.8	4.3									
140	85.2	1.5	1.7	58.6	1.6	2.2	41.5	1.9	2.7	29.4	2.1	3.3	23.1	2.4	3.8	17.6	2.8	4.3									
145	88.2	1.5	1.7	60.7	1.6	2.2	43.0	1.9	2.7	30.5	2.1	3.3	24.0	2.4	3.8	18.3	2.8	4.3	12.3	3.7	4.9						
150	91.3	1.5	1.7	62.8	1.6	2.2	44.5	1.9	2.7	31.6	2.1	3.3	24.8	2.4	3.8	19.0	2.7	4.3	13.1	3.5	4.9						

RETARDANCE "D" AND "C"

NOTE: Width and Depth dimensions are in feet; Velocity measurements are in feet per second; Depth "D" does not include allowance for freeboard or settlement.

Table GS-4 Parabolic Grass Swale Design Sheet 3 of 14

V1 FOR RETARDANCE "D", TOP WIDTH (T), DEPTH (D), AND V2 FOR RETARDANCE "C"

Grade 0.75 Percent

Q CFS	V1=2.0			V1=2.5			V1=3.0			V1=3.5			V1=4.0			V1=4.5			V1=5.0			V1=5.5			V1=6.0		
	T	D	V2	T	D	V2	T	D	V2	T	D	V2	T	D	V2	T	D	V2	T	D	V2	T	D	V2	T	D	V2
5																											
10	7.0	1.3	1.6																								
15	11.0	1.3	1.6	7.1	1.5	2.1																					
20	14.9	1.3	1.6	9.9	1.4	2.1	6.1	1.9	2.6																		
25	18.9	1.2	1.6	12.7	1.4	2.1	8.6	1.6	2.7																		
30	22.7	1.2	1.6	15.3	1.4	2.1	10.6	1.6	2.6	6.7	2.1	3.2															
35	26.5	1.2	1.6	18.0	1.4	2.1	12.6	1.6	2.7	8.7	1.9	3.2															
40	30.2	1.2	1.6	20.6	1.4	2.1	14.5	1.6	2.7	10.3	1.8	3.2															
45	34.0	1.2	1.6	23.5	1.4	2.1	16.4	1.5	2.7	11.8	1.8	3.2	7.8	2.3	3.8												
50	37.8	1.2	1.6	26.1	1.4	2.1	18.3	1.5	2.7	13.2	1.8	3.2	9.5	2.1	3.8												
55	41.5	1.2	1.6	28.7	1.4	2.1	20.2	1.5	2.7	14.7	1.7	3.2	10.7	2.0	3.8												
60	45.3	1.2	1.6	31.3	1.4	2.1	22.1	1.5	2.7	16.1	1.7	3.2	11.8	2.0	3.8												
65	49.1	1.2	1.6	33.9	1.4	2.1	24.3	1.5	2.6	17.6	1.7	3.2	13.0	2.0	3.8	8.5	2.6	4.4									
70	52.9	1.2	1.6	36.5	1.4	2.1	26.2	1.5	2.6	19.0	1.7	3.2	14.1	2.0	3.8	10.0	2.4	4.3									
75	56.6	1.2	1.6	39.1	1.4	2.1	28.0	1.5	2.6	20.4	1.7	3.2	15.2	2.0	3.8	11.0	2.4	4.4									
80	60.4	1.2	1.6	41.7	1.4	2.1	29.9	1.5	2.6	21.8	1.7	3.2	16.3	1.9	3.8	11.9	2.3	4.4									
85	64.2	1.2	1.6	44.3	1.4	2.1	31.8	1.5	2.6	23.2	1.7	3.2	17.4	1.9	3.8	12.8	2.3	4.4	9.1	2.9	4.8						
90	67.9	1.2	1.6	46.9	1.4	2.1	33.6	1.5	2.6	24.6	1.7	3.2	18.5	1.9	3.8	13.7	2.3	4.4	10.3	2.7	4.8						
95	71.7	1.2	1.6	49.5	1.4	2.1	35.5	1.5	2.6	26.0	1.7	3.2	19.6	1.9	3.8	14.6	2.2	4.4	11.4	2.6	4.8						
100	75.5	1.2	1.6	52.1	1.4	2.1	37.3	1.5	2.6	27.8	1.7	3.2	20.7	1.9	3.8	15.4	2.2	4.4	12.2	2.6	4.8						
105	79.3	1.2	1.6	54.7	1.4	2.1	39.2	1.5	2.6	29.1	1.7	3.2	21.8	1.9	3.8	16.3	2.2	4.4	12.9	2.5	4.8						
110	83.0	1.2	1.6	57.3	1.4	2.1	41.1	1.5	2.6	30.5	1.7	3.2	22.8	1.9	3.8	17.2	2.2	4.4	13.7	2.5	4.8						
115	86.8	1.2	1.6	59.9	1.4	2.1	42.9	1.5	2.6	31.9	1.7	3.2	23.9	1.9	3.8	18.0	2.2	4.4	14.4	2.5	4.8	10.5	3.1	5.3			
120	90.6	1.2	1.6	62.5	1.4	2.1	44.8	1.5	2.7	33.3	1.7	3.2	25.0	1.9	3.8	18.9	2.2	4.4	15.2	2.5	4.8	11.4	3.0	5.3			
125	94.3	1.2	1.6	65.1	1.4	2.1	46.7	1.5	2.7	34.7	1.7	3.2	26.0	1.9	3.8	19.7	2.2	4.4	15.9	2.4	4.8	12.4	2.9	5.3			
130	98.1	1.2	1.6	67.7	1.4	2.1	48.5	1.5	2.7	36.0	1.7	3.2	27.1	1.9	3.8	20.5	2.2	4.4	16.6	2.4	4.8	13.0	2.8	5.3			
135	101.9	1.2	1.6	70.3	1.4	2.1	50.4	1.5	2.7	37.4	1.7	3.2	28.2	1.9	3.8	21.4	2.2	4.4	17.3	2.4	4.8	13.7	2.8	5.3			
140	105.7	1.2	1.6	72.9	1.4	2.1	52.2	1.5	2.7	38.8	1.7	3.2	29.3	1.9	3.8	22.2	2.2	4.4	18.0	2.4	4.9	14.3	2.8	5.3			
145	109.4	1.2	1.6	75.5	1.4	2.1	54.1	1.5	2.7	40.2	1.7	3.2	30.8	1.9	3.7	23.1	2.2	4.4	18.7	2.4	4.9	14.9	2.7	5.3			
150	113.2	1.2	1.6	78.1	1.4	2.1	56.0	1.5	2.7	41.6	1.7	3.2	31.9	1.9	3.7	23.9	2.1	4.4	19.4	2.4	4.9	15.5	2.7	5.3			

RETARDANCE "D" AND "C"

NOTE: Width and Depth dimensions are in feet; Velocity measurements are in feet per second; Depth "D" does not include allowance for freeboard or settlement.

Table GS-4 Parabolic Grass Swale Design Sheet 4 of 14

V1 FOR RETARDANCE "D", TOP WIDTH (T), DEPTH (D), AND V2 FOR RETARDANCE "C"

Grade 1.00 Percent

Q CFS	V1=2.0			V1=2.5			V1=3.0			V1=3.5			V1=4.0			V1=4.5			V1=5.0			V1=5.5			V1=6.0		
	T	D	V2	T	D	V2	T	D	V2	T	D	V2	T	D	V2	T	D	V2	T	D	V2	T	D	V2	T	D	V2
5																											
10	8.2	1.2	1.6	5.2	1.4	2.0																					
15	12.6	1.1	1.6	8.7	1.3	2.1	5.5	1.6	2.6																		
20	17.1	1.1	1.6	11.8	1.2	2.1	8.2	1.4	2.6																		
25	21.4	1.1	1.6	14.9	1.2	2.1	10.5	1.4	2.6	7.3	1.6	3.1															
30	25.7	1.1	1.6	18.0	1.2	2.1	12.8	1.4	2.6	9.1	1.6	3.2															
35	29.9	1.1	1.6	21.2	1.2	2.1	15.0	1.3	2.6	10.9	1.5	3.1	7.8	1.8	3.7												
40	34.2	1.1	1.6	24.3	1.2	2.1	17.3	1.3	2.6	12.6	1.5	3.1	9.2	1.7	3.7												
45	38.5	1.1	1.6	27.3	1.2	2.1	19.5	1.3	2.6	14.3	1.5	3.1	10.6	1.7	3.7	7.2	2.2	4.3									
50	42.7	1.1	1.6	30.3	1.2	2.1	21.9	1.3	2.6	16.0	1.5	3.2	11.9	1.7	3.7	8.8	2.0	4.3									
55	47.0	1.1	1.6	33.3	1.2	2.1	24.1	1.3	2.6	17.7	1.5	3.2	13.3	1.7	3.7	9.9	1.9	4.3									
60	51.3	1.1	1.6	36.3	1.2	2.1	26.3	1.3	2.6	19.3	1.5	3.2	14.6	1.7	3.7	11.0	1.9	4.3									
65	55.5	1.1	1.6	39.4	1.2	2.1	28.5	1.3	2.6	21.0	1.5	3.2	15.9	1.6	3.7	12.1	1.9	4.3	8.0	2.5	4.9						
70	59.8	1.1	1.6	42.4	1.2	2.1	30.7	1.3	2.6	22.7	1.5	3.2	17.1	1.6	3.7	13.2	1.9	4.3	9.5	2.3	4.8						
75	64.1	1.1	1.6	45.4	1.2	2.1	32.9	1.3	2.6	24.6	1.5	3.1	18.5	1.6	3.7	14.2	1.8	4.3	10.4	2.2	4.9						
80	68.3	1.1	1.6	48.4	1.2	2.1	35.0	1.3	2.6	26.2	1.5	3.1	19.8	1.6	3.7	15.2	1.8	4.3	11.3	2.2	4.9						
85	72.6	1.1	1.6	51.5	1.2	2.1	37.2	1.3	2.6	27.9	1.5	3.1	21.0	1.6	3.7	16.3	1.8	4.3	12.1	2.2	4.9	8.8	2.7	5.4			
90	76.9	1.1	1.6	54.5	1.2	2.1	39.4	1.3	2.6	29.5	1.5	3.1	22.3	1.6	3.7	17.3	1.8	4.3	13.0	2.1	4.9	9.8	2.6	5.4			
95	81.1	1.1	1.6	57.5	1.2	2.1	41.6	1.3	2.6	31.1	1.5	3.1	23.6	1.6	3.7	18.3	1.8	4.3	13.8	2.1	4.9	10.9	2.5	5.3			
100	85.4	1.1	1.6	60.5	1.2	2.1	43.8	1.3	2.6	32.7	1.5	3.1	24.9	1.6	3.7	19.3	1.8	4.3	14.6	2.1	4.9	11.6	2.4	5.4			
105	89.7	1.1	1.6	63.6	1.2	2.1	46.0	1.3	2.6	34.4	1.5	3.1	26.5	1.6	3.7	20.3	1.8	4.3	15.4	2.1	4.9	12.4	2.4	5.4	9.7	2.8	5.8
110	94.0	1.1	1.6	66.6	1.2	2.1	48.2	1.3	2.6	36.0	1.5	3.1	27.7	1.6	3.7	21.3	1.8	4.3	16.2	2.1	4.9	13.1	2.4	5.4	10.8	2.6	5.8
115	98.2	1.1	1.6	69.6	1.2	2.1	50.4	1.3	2.6	37.6	1.5	3.1	29.0	1.6	3.7	22.3	1.8	4.3	17.0	2.1	4.9	13.8	2.3	5.4	11.5	2.6	5.8
120	102.5	1.1	1.6	72.6	1.2	2.1	52.5	1.3	2.6	39.3	1.5	3.1	30.2	1.6	3.7	23.3	1.8	4.3	17.9	2.1	4.9	14.5	2.3	5.4	12.2	2.6	5.8
125	106.8	1.1	1.6	75.7	1.2	2.1	54.7	1.3	2.6	40.9	1.5	3.1	31.5	1.6	3.7	24.3	1.8	4.3	18.7	2.1	4.9	15.2	2.3	5.4	12.8	2.5	5.8
130	111.0	1.1	1.6	78.7	1.2	2.1	56.9	1.3	2.6	42.5	1.5	3.1	32.7	1.6	3.7	25.3	1.8	4.3	19.4	2.1	4.9	15.9	2.3	5.4	13.4	2.5	5.8
135	115.3	1.1	1.6	81.7	1.2	2.1	59.1	1.3	2.6	44.2	1.5	3.1	34.0	1.6	3.7	26.3	1.8	4.3	20.2	2.0	4.9	16.6	2.3	5.4	14.1	2.5	5.8
140	119.6	1.1	1.6	84.7	1.2	2.1	61.3	1.3	2.6	45.8	1.5	3.1	35.2	1.6	3.7	27.3	1.8	4.3	21.0	2.0	4.9	17.2	2.3	5.4	14.7	2.5	5.8
145	123.8	1.1	1.6	87.8	1.2	2.1	63.5	1.3	2.6	47.5	1.5	3.1	36.5	1.6	3.7	28.7	1.8	4.3	21.8	2.0	4.9	17.9	2.3	5.4	15.3	2.5	5.8
150	128.1	1.1	1.6	90.8	1.2	2.1	65.7	1.3	2.6	49.1	1.5	3.1	37.8	1.6	3.7	29.7	1.8	4.3	22.6	2.0	4.9	18.6	2.3	5.4	15.9	2.4	5.8

RETARDANCE "D" AND "C"

NOTE: Width and Depth dimensions are in feet; Velocity measurements are in feet per second; Depth "D" does not include allowance for freeboard or settlement.

Table GS-4 Parabolic Grass Swale Design Sheet 5 of 14

V1 FOR RETARDANCE "D", TOP WIDTH (T), DEPTH (D), AND V2 FOR RETARDANCE "C"

Grade 1.25 Percent

Q CFS	V1=2.0			V1=2.5			V1=3.0			V1=3.5			V1=4.0			V1=4.5			V1=5.0			V1=5.5			V1=6.0		
	T	D	V2	T	D	V2	T	D	V2	T	D	V2	T	D	V2	T	D	V2	T	D	V2	T	D	V2	T	D	V2
5	4.1	1.2	1.5																								
10	9.4	1.0	1.5	6.3	1.2	2.0																					
15	14.3	1.0	1.6	9.9	1.1	2.0	6.8	1.3	2.6																		
20	19.4	1.0	1.5	13.4	1.1	2.0	9.5	1.2	2.6	6.7	1.4	3.1															
25	24.2	1.0	1.5	17.0	1.1	2.0	12.1	1.2	2.6	8.8	1.4	3.1	5.9	1.7	3.6												
30	29.0	1.0	1.6	20.4	1.1	2.0	14.6	1.2	2.6	10.7	1.4	3.1	7.8	1.6	3.7												
35	33.8	1.0	1.6	23.8	1.1	2.0	17.1	1.2	2.6	12.7	1.3	3.1	9.4	1.5	3.7	6.5	1.9	4.2									
40	38.6	1.0	1.6	27.1	1.1	2.0	19.8	1.2	2.5	14.6	1.3	3.1	10.9	1.5	3.7	8.1	1.7	4.2									
45	43.5	1.0	1.6	30.5	1.1	2.0	22.3	1.2	2.5	16.5	1.3	3.1	12.5	1.5	3.7	9.4	1.7	4.2									
50	48.3	1.0	1.6	33.9	1.1	2.0	24.8	1.2	2.5	18.3	1.3	3.1	13.9	1.5	3.7	10.6	1.7	4.2	7.7	2.0	4.8						
55	53.1	1.0	1.6	37.3	1.1	2.0	27.2	1.2	2.6	20.5	1.3	3.1	15.4	1.5	3.7	11.8	1.6	4.3	9.0	1.9	4.8						
60	57.9	1.0	1.6	40.7	1.1	2.0	29.7	1.2	2.6	22.3	1.3	3.1	16.9	1.5	3.7	13.0	1.6	4.3	10.1	1.9	4.8						
65	62.8	1.0	1.6	44.1	1.1	2.0	32.2	1.2	2.6	24.2	1.3	3.1	18.3	1.5	3.7	14.2	1.6	4.3	11.1	1.8	4.8	8.0	2.3	5.3			
70	67.6	1.0	1.6	47.5	1.1	2.0	34.6	1.2	2.6	26.0	1.3	3.1	19.8	1.4	3.7	15.4	1.6	4.3	12.0	1.8	4.8	9.3	2.1	5.3			
75	72.4	1.0	1.6	50.8	1.1	2.0	37.1	1.2	2.6	27.9	1.3	3.1	21.2	1.4	3.7	16.5	1.6	4.3	13.0	1.8	4.8	10.1	2.1	5.3			
80	77.2	1.0	1.6	54.2	1.1	2.0	39.6	1.2	2.6	29.7	1.3	3.1	23.0	1.4	3.6	17.7	1.6	4.3	14.0	1.8	4.8	11.0	2.0	5.3			
85	82.1	1.0	1.6	57.6	1.1	2.0	42.0	1.2	2.6	31.6	1.3	3.1	24.4	1.4	3.6	18.8	1.6	4.3	14.9	1.8	4.8	11.8	2.0	5.3			
90	86.9	1.0	1.6	61.0	1.1	2.0	44.5	1.2	2.6	33.5	1.3	3.1	25.8	1.4	3.6	20.0	1.6	4.3	15.9	1.8	4.8	12.6	2.0	5.3	9.1	2.5	5.9
95	91.7	1.0	1.6	64.4	1.1	2.0	47.0	1.2	2.6	35.3	1.3	3.1	27.3	1.4	3.6	21.1	1.6	4.3	16.8	1.8	4.8	13.4	2.0	5.4	10.2	2.4	5.9
100	96.6	1.0	1.6	67.8	1.1	2.0	49.4	1.2	2.6	37.2	1.3	3.1	28.7	1.4	3.6	22.3	1.6	4.3	17.7	1.8	4.8	14.2	2.0	5.4	10.9	2.3	5.9
105	101.4	1.0	1.6	71.2	1.1	2.0	51.9	1.2	2.6	39.0	1.3	3.1	30.1	1.4	3.6	23.4	1.6	4.3	18.7	1.8	4.8	15.0	2.0	5.4	11.6	2.3	5.9
110	106.2	1.0	1.6	74.6	1.1	2.0	54.4	1.2	2.6	40.9	1.3	3.1	31.6	1.4	3.6	24.6	1.6	4.3	19.6	1.7	4.8	15.8	2.0	5.4	12.3	2.3	5.9
115	111.0	1.0	1.6	78.0	1.1	2.0	56.8	1.2	2.6	42.7	1.3	3.1	33.0	1.4	3.6	26.1	1.6	4.2	20.5	1.7	4.8	16.6	1.9	5.4	13.0	2.2	5.9
120	115.9	1.0	1.6	81.3	1.1	2.0	59.3	1.2	2.6	44.6	1.3	3.1	34.4	1.4	3.6	27.2	1.6	4.2	21.5	1.7	4.8	17.3	1.9	5.4	13.6	2.2	5.9
125	120.7	1.0	1.6	84.7	1.1	2.0	61.8	1.2	2.6	46.4	1.3	3.1	35.9	1.4	3.6	28.3	1.6	4.2	22.4	1.7	4.8	18.1	1.9	5.4	14.3	2.2	5.9
130	125.5	1.0	1.6	88.1	1.1	2.0	64.3	1.2	2.6	48.3	1.3	3.1	37.3	1.4	3.7	29.5	1.6	4.2	23.3	1.7	4.8	18.9	1.9	5.4	14.9	2.2	5.9
135	130.3	1.0	1.6	91.5	1.1	2.0	66.7	1.2	2.6	50.2	1.3	3.1	38.7	1.4	3.7	30.6	1.6	4.2	24.2	1.7	4.8	19.6	1.9	5.4	15.6	2.2	5.9
140	135.2	1.0	1.6	94.9	1.1	2.0	69.2	1.2	2.6	52.0	1.3	3.1	40.2	1.4	3.7	31.7	1.6	4.2	25.1	1.7	4.8	20.4	1.9	5.4	16.2	2.2	5.9
145	140.0	1.0	1.6	98.3	1.1	2.0	71.7	1.2	2.6	53.9	1.3	3.1	41.6	1.4	3.7	32.9	1.6	4.2	26.1	1.7	4.8	21.2	1.9	5.4	16.9	2.2	5.9
150	144.8	1.0	1.6	101.7	1.1	2.0	74.1	1.2	2.6	55.7	1.3	3.1	43.0	1.4	3.7	34.0	1.6	4.2	27.0	1.7	4.8	21.9	1.9	5.4	17.5	2.2	5.9

RETARDANCE "D" AND "C"

NOTE: Width and Depth dimensions are in feet; Velocity measurements are in feet per second
Depth "D" does not include allowance for freeboard or settlement.

Table GS-4 Parabolic Grass Swale Design Sheet 6 of 14

V1 FOR RETARDANCE "D", TOP WIDTH (T), DEPTH (D), AND V2 FOR RETARDANCE "C"

Grade 1.50 Percent

Q CFS	V1=2.0			V1=2.5			V1=3.0			V1=3.5			V1=4.0			V1=4.5			V1=5.0			V1=5.5			V1=6.0		
	T	D	V2	T	D	V2	T	D	V2	T	D	V2	T	D	V2	T	D	V2	T	D	V2	T	D	V2	T	D	V2
5	4.9	1.0	1.5																								
10	10.5	0.9	1.5	7.1	1.1	2.0	4.6	1.3	2.5																		
15	16.0	0.9	1.5	10.9	1.0	2.0	7.8	1.1	2.5	5.3	1.4	3.1															
20	21.3	0.9	1.5	14.7	1.0	2.0	10.6	1.1	2.5	7.7	1.3	3.1	5.1	1.6	3.6												
25	26.6	0.9	1.5	18.6	1.0	2.0	13.4	1.1	2.5	9.9	1.2	3.1	7.3	1.4	3.6												
30	31.9	0.9	1.5	22.3	1.0	2.0	16.2	1.1	2.5	12.0	1.2	3.1	9.0	1.4	3.6	6.6	1.6	4.2									
35	37.3	0.9	1.5	26.0	1.0	2.0	19.1	1.1	2.5	14.1	1.2	3.1	10.7	1.4	3.6	8.1	1.5	4.2									
40	42.6	0.9	1.5	29.7	1.0	2.0	21.8	1.1	2.5	16.2	1.2	3.1	12.4	1.3	3.6	9.5	1.5	4.2	6.9	1.8	4.7						
45	47.9	0.9	1.5	33.4	1.0	2.0	24.5	1.1	2.5	18.3	1.2	3.1	14.0	1.3	3.6	10.8	1.5	4.2	8.3	1.7	4.7						
50	53.2	0.9	1.5	37.1	1.0	2.0	27.3	1.1	2.5	20.6	1.2	3.0	15.7	1.3	3.6	12.1	1.5	4.2	9.4	1.7	4.8						
55	58.5	0.9	1.5	40.8	1.0	2.0	30.0	1.1	2.5	22.7	1.2	3.0	17.3	1.3	3.6	13.4	1.5	4.2	10.5	1.6	4.8	8.1	1.9	5.3			
60	63.8	0.9	1.5	44.5	1.0	2.0	32.7	1.1	2.5	24.7	1.2	3.0	18.9	1.3	3.6	14.7	1.4	4.2	11.6	1.6	4.8	9.1	1.9	5.3			
65	69.2	0.9	1.5	48.2	1.0	2.0	35.4	1.1	2.5	26.8	1.2	3.1	20.8	1.3	3.6	16.0	1.4	4.2	12.7	1.6	4.8	10.0	1.8	5.3			
70	74.5	0.9	1.5	51.9	1.0	2.0	38.2	1.1	2.5	28.8	1.2	3.1	22.4	1.3	3.6	17.3	1.4	4.2	13.7	1.6	4.8	10.9	1.8	5.3	8.2	2.2	5.8
75	79.8	0.9	1.5	55.6	1.0	2.0	40.9	1.1	2.5	30.9	1.2	3.1	23.9	1.3	3.6	18.6	1.4	4.2	14.8	1.6	4.8	11.8	1.8	5.3	9.3	2.1	5.8
80	85.1	0.9	1.5	59.4	1.0	2.0	43.6	1.1	2.5	32.9	1.2	3.1	25.5	1.3	3.6	19.9	1.4	4.2	15.8	1.6	4.8	12.7	1.8	5.3	10.1	2.0	5.9
85	90.4	0.9	1.5	63.1	1.0	2.0	46.3	1.1	2.5	35.0	1.2	3.1	27.1	1.3	3.6	21.2	1.4	4.2	16.9	1.6	4.8	13.6	1.8	5.3	10.9	2.0	5.9
90	95.8	0.9	1.5	66.8	1.0	2.0	49.0	1.1	2.5	37.1	1.2	3.1	28.7	1.3	3.6	22.8	1.4	4.1	17.9	1.6	4.8	14.5	1.8	5.3	11.6	2.0	5.9
95	101.1	0.9	1.5	70.5	1.0	2.0	51.8	1.1	2.5	39.1	1.2	3.1	30.3	1.3	3.6	24.0	1.4	4.2	18.9	1.6	4.8	15.3	1.7	5.3	12.4	2.0	5.9
100	106.4	0.9	1.5	74.2	1.0	2.0	54.5	1.1	2.5	41.2	1.2	3.1	31.9	1.3	3.6	25.3	1.4	4.2	20.0	1.6	4.8	16.2	1.7	5.3	13.1	1.9	5.9
105	111.7	0.9	1.5	77.9	1.0	2.0	57.2	1.1	2.5	43.2	1.2	3.1	33.5	1.3	3.6	26.5	1.4	4.2	21.0	1.6	4.8	17.0	1.7	5.3	13.9	1.9	5.9
110	117.0	0.9	1.5	81.6	1.0	2.0	59.9	1.1	2.5	45.3	1.2	3.1	35.1	1.3	3.6	27.8	1.4	4.2	22.0	1.6	4.8	17.9	1.7	5.3	14.6	1.9	5.9
115	122.4	0.9	1.5	85.3	1.0	2.0	62.6	1.1	2.5	47.3	1.2	3.1	36.7	1.3	3.6	29.1	1.4	4.2	23.1	1.6	4.8	18.8	1.7	5.3	15.3	1.9	5.9
120	127.7	0.9	1.5	89.0	1.0	2.0	65.4	1.1	2.5	49.4	1.2	3.1	38.3	1.3	3.6	30.3	1.4	4.2	24.1	1.6	4.8	19.6	1.7	5.3	16.1	1.9	5.9
125	133.0	0.9	1.5	92.7	1.0	2.0	68.1	1.1	2.5	51.4	1.2	3.1	39.9	1.3	3.6	31.6	1.4	4.2	25.4	1.6	4.8	20.5	1.7	5.3	16.8	1.9	5.9
130	138.3	0.9	1.5	96.4	1.0	2.0	70.8	1.1	2.5	53.5	1.2	3.1	41.4	1.3	3.6	32.8	1.4	4.2	26.4	1.6	4.8	21.3	1.7	5.3	17.5	1.9	5.9
135	143.6	0.9	1.5	100.1	1.0	2.0	73.5	1.1	2.5	55.6	1.2	3.1	43.0	1.3	3.6	34.1	1.4	4.2	27.4	1.6	4.8	22.2	1.7	5.3	18.2	1.9	5.9
140	149.0	0.9	1.5	103.9	1.0	2.0	76.3	1.1	2.5	57.6	1.2	3.1	44.6	1.3	3.6	35.3	1.4	4.2	28.5	1.6	4.8	23.0	1.7	5.3	18.9	1.9	5.9
145	154.3	0.9	1.5	107.6	1.0	2.0	79.0	1.1	2.5	59.7	1.2	3.1	46.2	1.3	3.6	36.6	1.4	4.2	29.5	1.6	4.8	23.8	1.7	5.3	19.7	1.9	5.9
150	159.6	0.9	1.5	111.3	1.0	2.0	81.7	1.1	2.5	61.7	1.2	3.1	47.8	1.3	3.6	37.9	1.4	4.2	30.5	1.6	4.8	24.7	1.7	5.3	20.4	1.9	5.9

RETARDANCE "D" AND "C"

NOTE: Width and Depth dimensions are in feet; Velocity measurements are in feet per second; Depth "D" does not include allowance for freeboard or settlement.

GaSWCC (Amd

Table GS-4 Parabolic Grass Swale Design Sheet 7 of 14

V1 FOR RETARDANCE "D", TOP WIDTH (T), DEPTH (D), AND V2 FOR RETARDANCE "C"

Grade 1.75 Percent

Q CFS	V1=2.0			V1=2.5			V1=3.0			V1=3.5			V1=4.0			V1=4.5			V1=5.0			V1=5.5			V1=6.0		
	T	D	V2	T	D	V2	T	D	V2	T	D	V2	T	D	V2	T	D	V2	T	D	V2	T	D	V2	T	D	V2
5	5.4	0.9	1.5																								
10	11.4	0.9	1.5	7.7	1.0	2.0	5.4	1.1	2.5																		
15	17.3	0.9	1.5	11.8	1.0	2.0	8.6	1.1	2.5	6.2	1.2	3.0															
20	23.1	0.9	1.5	16.0	0.9	2.0	11.6	1.0	2.5	8.6	1.2	3.0	6.3	1.3	3.6												
25	28.8	0.9	1.5	20.0	0.9	2.0	14.6	1.0	2.5	10.9	1.1	3.0	8.2	1.3	3.6	5.9	1.5	4.1									
30	34.6	0.9	1.5	24.0	0.9	2.0	17.8	1.0	2.5	13.2	1.1	3.0	10.1	1.2	3.6	7.6	1.4	4.2									
35	40.3	0.9	1.5	28.0	0.9	2.0	20.7	1.0	2.5	15.5	1.1	3.0	11.9	1.2	3.6	9.1	1.4	4.2	6.9	1.6	4.7						
40	46.1	0.9	1.5	32.0	0.9	2.0	23.7	1.0	2.5	18.0	1.1	3.0	13.7	1.2	3.6	10.6	1.4	4.2	8.2	1.6	4.7						
45	51.9	0.9	1.5	36.0	0.9	2.0	26.6	1.0	2.5	20.2	1.1	3.0	15.4	1.2	3.6	12.0	1.3	4.2	9.4	1.5	4.7	7.0	1.8	5.3			
50	57.6	0.9	1.5	40.0	0.9	2.0	29.6	1.0	2.5	22.4	1.1	3.0	17.2	1.2	3.6	13.5	1.3	4.1	10.6	1.5	4.7	8.3	1.7	5.3			
55	63.4	0.9	1.5	44.0	0.9	2.0	32.5	1.0	2.5	24.7	1.1	3.0	19.2	1.2	3.6	14.9	1.3	4.1	11.8	1.5	4.7	9.3	1.7	5.3	6.7	2.1	5.8
60	69.1	0.9	1.5	48.0	0.9	2.0	35.5	1.0	2.5	26.9	1.1	3.0	20.9	1.2	3.6	16.3	1.3	4.1	12.9	1.5	4.7	10.3	1.6	5.3	8.1	1.9	5.8
65	74.9	0.9	1.5	52.0	0.9	2.0	38.4	1.0	2.5	29.2	1.1	3.0	22.7	1.2	3.6	17.7	1.3	4.1	14.1	1.5	4.7	11.3	1.6	5.3	9.0	1.9	5.8
70	80.7	0.9	1.5	56.0	0.9	2.0	41.4	1.0	2.5	31.4	1.1	3.0	24.4	1.2	3.6	19.1	1.3	4.1	15.2	1.5	4.7	12.3	1.6	5.3	9.8	1.8	5.8
75	86.4	0.9	1.5	60.0	0.9	2.0	44.3	1.0	2.5	33.6	1.1	3.0	26.1	1.2	3.6	20.5	1.3	4.1	16.4	1.4	4.7	13.2	1.6	5.3	10.7	1.8	5.8
80	92.2	0.9	1.5	63.9	0.9	2.0	47.3	1.0	2.5	35.9	1.1	3.0	27.9	1.2	3.6	22.2	1.3	4.1	17.5	1.4	4.7	14.2	1.6	5.3	11.5	1.8	5.8
85	97.9	0.9	1.5	67.9	0.9	2.0	50.2	1.0	2.5	38.1	1.1	3.0	29.6	1.2	3.6	23.5	1.3	4.1	18.6	1.4	4.7	15.1	1.6	5.3	12.3	1.8	5.8
90	103.7	0.9	1.5	71.9	0.9	2.0	53.2	1.0	2.5	40.3	1.1	3.0	31.4	1.2	3.6	24.9	1.3	4.1	19.8	1.4	4.7	16.1	1.6	5.3	13.1	1.8	5.8
95	109.5	0.9	1.5	75.9	0.9	2.0	56.1	1.0	2.5	42.6	1.1	3.0	33.1	1.2	3.6	26.3	1.3	4.1	20.9	1.4	4.7	17.0	1.6	5.3	13.9	1.7	5.8
100	115.2	0.9	1.5	79.9	0.9	2.0	59.1	1.0	2.5	44.8	1.1	3.0	34.8	1.2	3.6	27.7	1.3	4.1	22.0	1.4	4.7	17.9	1.6	5.3	14.7	1.7	5.8
105	121.0	0.9	1.5	83.9	0.9	2.0	62.0	1.0	2.5	47.1	1.1	3.0	36.6	1.2	3.6	29.0	1.3	4.1	23.4	1.4	4.7	18.9	1.6	5.3	15.5	1.7	5.8
110	126.8	0.9	1.5	87.9	0.9	2.0	65.0	1.0	2.5	49.3	1.1	3.0	38.3	1.2	3.6	30.4	1.3	4.1	24.5	1.4	4.7	19.8	1.6	5.3	16.3	1.7	5.8
115	132.5	0.9	1.5	91.9	0.9	2.0	67.9	1.0	2.5	51.5	1.1	3.0	40.1	1.2	3.6	31.8	1.3	4.1	25.6	1.4	4.7	20.7	1.6	5.3	17.1	1.7	5.9
120	138.3	0.9	1.5	95.9	0.9	2.0	70.9	1.0	2.5	53.8	1.1	3.0	41.8	1.2	3.6	33.2	1.3	4.1	26.8	1.4	4.7	21.7	1.6	5.3	17.9	1.7	5.9
125	144.0	0.9	1.5	99.9	0.9	2.0	73.8	1.0	2.5	56.0	1.1	3.0	43.5	1.2	3.6	34.6	1.3	4.1	27.9	1.4	4.7	22.6	1.6	5.3	18.7	1.7	5.9
130	149.8	0.9	1.5	103.9	0.9	2.0	76.8	1.0	2.5	58.3	1.1	3.0	45.3	1.2	3.6	35.9	1.3	4.1	29.0	1.4	4.7	23.5	1.6	5.3	19.4	1.7	5.9
135	155.6	0.9	1.5	107.9	0.9	2.0	79.7	1.0	2.5	60.5	1.1	3.0	47.0	1.2	3.6	37.3	1.3	4.1	30.1	1.4	4.7	24.5	1.6	5.3	20.2	1.7	5.9
140	161.3	0.9	1.5	111.9	0.9	2.0	82.7	1.0	2.5	62.7	1.1	3.0	48.8	1.2	3.6	38.7	1.3	4.1	31.2	1.4	4.7	25.7	1.6	5.3	21.0	1.7	5.9
145	167.1	0.9	1.5	115.9	0.9	2.0	85.6	1.0	2.5	65.0	1.1	3.0	50.5	1.2	3.6	40.1	1.3	4.1	32.3	1.4	4.7	26.6	1.6	5.3	21.8	1.7	5.9
150	172.8	0.9	1.5	119.9	0.9	2.0	88.6	1.0	2.5	67.2	1.1	3.0	52.2	1.2	3.6	41.5	1.3	4.1	33.4	1.4	4.7	27.5	1.6	5.3	22.6	1.7	5.9

RETARDANCE "D" AND "C"

NOTE: Width and Depth dimensions are in feet; Velocity measurements are in feet per second.
Depth "D" does not include allowance for freeboard or settlement.

Table GS-4 Parabolic Grass Swale Design Sheet 8 of 14

V1 FOR RETARDANCE "D", TOP WIDTH (T), DEPTH (D), AND V2 FOR RETARDANCE "C"

Grade 2.00 Percent

Q CFS	V1=2.0			V1=2.5			V1=3.0			V1=3.5			V1=4.0			V1=4.5			V1=5.0			V1=5.5			V1=6.0		
	T	D	V2	T	D	V2	T	D	V2	T	D	V2	T	D	V2	T	D	V2	T	D	V2	T	D	V2	T	D	V2
5	5.9	0.9	1.5																								
10	12.4	0.8	1.5	8.1	0.9	2.0	5.9	1.0	2.5																		
15	18.5	0.8	1.5	12.3	0.9	2.0	9.3	1.0	2.5	6.8	1.1	3.0	4.7	1.4	3.5												
20	24.7	0.8	1.5	16.7	0.9	2.0	12.5	1.0	2.5	9.4	1.1	3.0	7.0	1.2	3.6	4.7	1.5	4.1									
25	30.8	0.8	1.5	20.8	0.9	2.0	15.9	1.0	2.4	11.8	1.1	3.0	9.0	1.2	3.5	6.8	1.3	4.1									
30	37.0	0.8	1.5	25.0	0.9	2.0	19.0	1.0	2.5	14.3	1.1	3.0	11.0	1.2	3.5	8.5	1.3	4.1	6.4	1.5	4.7						
35	43.2	0.8	1.5	29.1	0.9	2.0	22.2	1.0	2.5	16.9	1.0	3.0	12.9	1.1	3.5	10.1	1.3	4.1	7.8	1.4	4.7						
40	49.3	0.8	1.5	33.3	0.9	2.0	25.3	1.0	2.5	19.3	1.0	3.0	14.8	1.1	3.5	11.6	1.3	4.1	9.1	1.4	4.7	7.1	1.6	5.2			
45	55.5	0.8	1.5	37.4	0.9	2.0	28.5	1.0	2.5	21.7	1.0	3.0	16.7	1.1	3.5	13.1	1.3	4.1	10.4	1.4	4.7	8.2	1.6	5.2			
50	61.7	0.8	1.5	41.6	0.9	2.0	31.7	1.0	2.5	24.1	1.0	3.0	18.8	1.1	3.5	14.7	1.2	4.1	11.7	1.4	4.7	9.3	1.5	5.3	7.1	1.8	5.8
55	67.8	0.8	1.5	45.7	0.9	2.0	34.8	1.0	2.5	26.5	1.0	3.0	20.7	1.1	3.5	16.2	1.2	4.1	12.9	1.4	4.7	10.4	1.5	5.3	8.2	1.7	5.8
60	74.0	0.8	1.5	49.9	0.9	2.0	38.0	1.0	2.5	28.9	1.0	3.0	22.6	1.1	3.5	17.7	1.2	4.1	14.1	1.4	4.7	11.4	1.5	5.3	9.2	1.7	5.8
65	80.2	0.8	1.5	54.0	0.9	2.0	41.1	1.0	2.5	31.4	1.0	3.0	24.5	1.1	3.5	19.5	1.2	4.1	15.4	1.3	4.7	12.4	1.5	5.3	10.1	1.7	5.8
70	86.3	0.8	1.5	58.2	0.9	2.0	44.3	1.0	2.5	33.8	1.0	3.0	26.3	1.1	3.5	21.0	1.2	4.1	16.6	1.3	4.7	13.5	1.5	5.3	11.0	1.6	5.8
75	92.5	0.8	1.5	62.3	0.9	2.0	47.5	1.0	2.5	36.2	1.0	3.0	28.2	1.1	3.5	22.4	1.2	4.1	17.8	1.3	4.7	14.5	1.5	5.3	11.8	1.6	5.8
80	98.7	0.8	1.5	66.5	0.9	2.0	50.6	1.0	2.5	38.6	1.0	3.0	30.1	1.1	3.5	23.9	1.2	4.1	19.0	1.3	4.7	15.5	1.5	5.3	12.7	1.6	5.8
85	104.8	0.8	1.5	70.6	0.9	2.0	53.8	1.0	2.5	41.0	1.0	3.0	32.0	1.1	3.5	25.4	1.2	4.1	20.3	1.3	4.7	16.5	1.5	5.3	13.6	1.6	5.8
90	111.0	0.8	1.5	74.8	0.9	2.0	57.0	1.0	2.5	43.4	1.0	3.0	33.8	1.1	3.5	26.9	1.2	4.1	21.8	1.3	4.6	17.5	1.5	5.3	14.4	1.6	5.8
95	117.2	0.8	1.5	78.9	0.9	2.0	60.1	1.0	2.5	45.8	1.0	3.0	35.7	1.1	3.5	28.4	1.2	4.1	23.0	1.3	4.6	18.6	1.5	5.3	15.3	1.6	5.8
100	123.3	0.8	1.5	83.1	0.9	2.0	63.3	1.0	2.5	48.2	1.0	3.0	37.6	1.1	3.5	29.9	1.2	4.1	24.2	1.3	4.6	19.6	1.5	5.3	16.2	1.6	5.8
105	129.5	0.8	1.5	87.3	0.9	2.0	66.4	1.0	2.5	50.6	1.0	3.0	39.5	1.1	3.5	31.4	1.2	4.1	25.4	1.3	4.6	20.6	1.5	5.3	17.0	1.6	5.8
110	135.7	0.8	1.5	91.4	0.9	2.0	69.6	1.0	2.5	53.0	1.0	3.0	41.3	1.1	3.5	32.9	1.2	4.1	26.6	1.3	4.7	21.6	1.4	5.3	17.9	1.6	5.8
115	141.8	0.8	1.5	95.6	0.9	2.0	72.8	1.0	2.5	55.4	1.0	3.0	43.2	1.1	3.5	34.4	1.2	4.1	27.9	1.3	4.7	22.6	1.4	5.3	18.7	1.6	5.8
120	148.0	0.8	1.5	99.7	0.9	2.0	75.9	1.0	2.5	57.9	1.0	3.0	45.1	1.1	3.5	35.9	1.2	4.1	29.1	1.3	4.7	23.9	1.4	5.2	19.5	1.6	5.8
125	154.1	0.8	1.5	103.9	0.9	2.0	79.1	1.0	2.5	60.3	1.0	3.0	47.0	1.1	3.5	37.4	1.2	4.1	30.3	1.3	4.7	24.8	1.4	5.2	20.4	1.6	5.8
130	160.3	0.8	1.5	108.0	0.9	2.0	82.3	1.0	2.5	62.7	1.0	3.0	48.8	1.1	3.5	38.9	1.2	4.1	31.5	1.3	4.7	25.8	1.4	5.3	21.2	1.6	5.8
135	166.5	0.8	1.5	112.2	0.9	2.0	85.4	1.0	2.5	65.1	1.0	3.0	50.7	1.1	3.5	40.3	1.2	4.1	32.7	1.3	4.7	26.8	1.4	5.3	22.1	1.6	5.8
140	172.6	0.8	1.5	116.3	0.9	2.0	88.6	1.0	2.5	67.5	1.0	3.0	52.6	1.1	3.5	41.8	1.2	4.1	33.9	1.3	4.7	27.8	1.4	5.3	22.9	1.6	5.8
145	178.8	0.8	1.5	120.5	0.9	2.0	91.8	1.0	2.5	69.9	1.0	3.0	54.5	1.1	3.5	43.3	1.2	4.1	35.1	1.3	4.7	28.8	1.4	5.3	23.7	1.6	5.8
150	185.0	0.8	1.5	124.6	0.9	2.0	94.9	1.0	2.5	72.3	1.0	3.0	56.4	1.1	3.5	44.8	1.2	4.1	36.3	1.3	4.7	29.8	1.4	5.3	24.6	1.6	5.8

RETARDANCE "D" AND "C"

NOTE: Width and Depth dimensions are in feet; Velocity measurements are in feet per second;
Depth "D" does not include allowance for freeboard or settlement.

Table GS-4 Parabolic Grass Swale Design Sheet 9 of 14

V1 FOR RETARDANCE "D", TOP WIDTH (T), DEPTH (D), AND V2 FOR RETARDANCE "C"

Grade 3.00 Percent

Q CFS	V1=2.0			V1=2.5			V1=3.0			V1=3.5			V1=4.0			V1=4.5			V1=5.0			V1=5.5			V1=6.0		
	T	D	V2	T	D	V2	T	D	V2	T	D	V2	T	D	V2	T	D	V2	T	D	V2	T	D	V2	T	D	V2
5	7.4	0.7	1.4	4.9	0.8	1.9	3.2	1.0	2.3																		
10	15.1	0.7	1.4	10.2	0.8	1.9	7.6	0.8	2.4	5.7	0.9	2.9	4.0	1.1	3.4												
15	22.6	0.7	1.4	15.6	0.8	1.9	11.5	0.8	2.4	8.8	0.9	2.9	6.7	1.0	3.4	5.1	1.1	4.0									
20	30.1	0.7	1.4	20.7	0.8	1.9	15.5	0.8	2.4	11.8	0.9	2.9	9.2	0.9	3.4	7.2	1.0	4.0	5.5	1.2	4.6						
25	37.6	0.7	1.4	25.9	0.8	1.9	19.4	0.8	2.4	15.0	0.9	2.9	11.6	0.9	3.4	9.2	1.0	4.0	7.2	1.1	4.6	5.6	1.3	5.1			
30	45.1	0.7	1.4	31.1	0.8	1.9	23.3	0.8	2.4	18.0	0.9	2.9	14.0	0.9	3.4	11.1	1.0	4.0	8.9	1.1	4.6	7.1	1.2	5.2	5.3	1.5	5.7
35	52.7	0.7	1.4	36.2	0.8	1.9	27.1	0.8	2.4	21.0	0.9	2.9	16.5	0.9	3.4	13.0	1.0	4.0	10.5	1.1	4.6	8.4	1.2	5.2	6.7	1.4	5.7
40	60.2	0.7	1.4	41.4	0.8	1.9	31.0	0.8	2.4	24.0	0.9	2.9	18.9	0.9	3.4	14.9	1.0	4.0	12.0	1.1	4.6	9.8	1.2	5.2	7.9	1.3	5.7
45	67.7	0.7	1.4	46.6	0.8	1.9	34.9	0.8	2.4	27.0	0.9	2.9	21.2	0.9	3.4	17.0	1.0	4.0	13.6	1.1	4.6	11.1	1.2	5.2	9.1	1.3	5.7
50	75.2	0.7	1.4	51.8	0.8	1.9	38.8	0.8	2.4	29.9	0.9	2.9	23.6	0.9	3.4	18.9	1.0	4.0	15.2	1.1	4.6	12.4	1.2	5.2	10.2	1.3	5.7
55	82.8	0.7	1.4	56.9	0.8	1.9	42.6	0.8	2.4	32.9	0.9	2.9	25.9	0.9	3.4	20.8	1.0	4.0	16.7	1.1	4.6	13.7	1.2	5.2	11.3	1.3	5.7
60	90.3	0.7	1.4	62.1	0.8	1.9	46.5	0.8	2.4	35.9	0.9	2.9	28.3	0.9	3.4	22.7	1.0	4.0	18.5	1.1	4.5	14.9	1.2	5.2	12.4	1.3	5.7
65	97.8	0.7	1.4	67.3	0.8	1.9	50.4	0.8	2.4	38.9	0.9	2.9	30.6	0.9	3.4	24.6	1.0	4.0	20.0	1.1	4.5	16.2	1.2	5.2	13.5	1.3	5.7
70	105.3	0.7	1.4	72.4	0.8	1.9	54.3	0.8	2.4	41.9	0.9	2.9	33.0	0.9	3.4	26.4	1.0	4.0	21.5	1.1	4.5	17.5	1.2	5.2	14.5	1.3	5.7
75	112.8	0.7	1.4	77.6	0.8	1.9	58.1	0.8	2.4	44.9	0.9	2.9	35.3	0.9	3.4	28.3	1.0	4.0	23.1	1.1	4.5	19.1	1.2	5.1	15.6	1.3	5.7
80	120.4	0.7	1.4	82.8	0.8	1.9	62.0	0.8	2.4	47.9	0.9	2.9	37.7	0.9	3.4	30.2	1.0	4.0	24.6	1.1	4.5	20.3	1.2	5.1	16.7	1.3	5.7
85	127.9	0.7	1.4	88.0	0.8	1.9	65.9	0.8	2.4	50.9	0.9	2.9	40.1	0.9	3.4	32.1	1.0	4.0	26.1	1.1	4.5	21.6	1.2	5.1	17.8	1.2	5.7
90	135.4	0.7	1.4	93.1	0.8	1.9	69.8	0.8	2.4	53.9	0.9	2.9	42.4	0.9	3.4	34.0	1.0	4.0	27.7	1.1	4.5	22.9	1.2	5.1	18.9	1.2	5.7
95	142.9	0.7	1.4	98.3	0.8	1.9	73.6	0.8	2.4	56.9	0.9	2.9	44.8	0.9	3.4	35.9	1.0	4.0	29.2	1.1	4.5	24.1	1.2	5.1	20.2	1.2	5.7
100	150.5	0.7	1.4	103.5	0.8	1.9	77.5	0.8	2.4	59.9	0.9	2.9	47.1	0.9	3.4	37.8	1.0	4.0	30.7	1.1	4.5	25.4	1.2	5.1	21.2	1.2	5.7
105	158.0	0.7	1.4	108.7	0.8	1.9	81.4	0.8	2.4	62.8	0.9	2.9	49.5	0.9	3.4	39.6	1.0	4.0	32.3	1.1	4.5	26.7	1.2	5.1	22.3	1.2	5.7
110	165.5	0.7	1.4	113.8	0.8	1.9	85.3	0.8	2.4	65.8	0.9	2.9	51.8	0.9	3.4	41.5	1.0	4.0	33.8	1.1	4.6	27.9	1.2	5.1	23.3	1.2	5.7
115	173.0	0.7	1.4	119.0	0.8	1.9	89.1	0.8	2.4	68.8	0.9	2.9	54.2	0.9	3.4	43.4	1.0	4.0	35.4	1.1	4.6	29.2	1.2	5.1	24.4	1.2	5.7
120	180.5	0.7	1.4	124.2	0.8	1.9	93.0	0.8	2.4	71.8	0.9	2.9	56.5	0.9	3.4	45.3	1.0	4.0	36.9	1.1	4.6	30.5	1.2	5.1	25.5	1.2	5.7
125	188.1	0.7	1.4	129.4	0.8	1.9	96.9	0.8	2.4	74.8	0.9	2.9	58.9	0.9	3.4	47.2	1.0	4.0	38.4	1.1	4.6	31.7	1.2	5.1	26.5	1.2	5.7
130	195.6	0.7	1.4	134.5	0.8	1.9	100.8	0.8	2.4	77.8	0.9	2.9	61.2	0.9	3.4	49.1	1.0	4.0	40.0	1.1	4.6	33.0	1.2	5.1	27.6	1.2	5.7
135	203.1	0.7	1.4	139.7	0.8	1.9	104.6	0.8	2.4	80.8	0.9	2.9	63.6	0.9	3.4	51.0	1.0	4.0	41.5	1.1	4.6	34.3	1.2	5.1	28.6	1.2	5.7
140	210.6	0.7	1.4	144.9	0.8	1.9	108.5	0.8	2.4	83.8	0.9	2.9	66.0	0.9	3.4	52.8	1.0	4.0	43.0	1.1	4.6	35.6	1.2	5.1	29.7	1.2	5.7
145	218.2	0.7	1.4	150.1	0.8	1.9	112.4	0.8	2.4	86.8	0.9	2.9	68.3	0.9	3.4	54.7	1.0	4.0	44.6	1.1	4.6	36.8	1.2	5.1	30.7	1.2	5.7
150	225.7	0.7	1.4	155.2	0.8	1.9	116.3	0.8	2.4	89.8	0.9	2.9	70.7	0.9	3.4	56.6	1.0	4.0	46.1	1.1	4.6	38.1	1.2	5.1	31.8	1.2	5.7

RETARDANCE "D" AND "C"

NOTE: Width and Depth dir sions are in feet; Velocity measurements are in feet per second; includ lowance for freeboarc settlement.

Table GS-4 Parabolic Grass Swale Design Sheet 10 of 14

V1 FOR RETARDANCE "D", TOP WIDTH (T), DEPTH (D), AND V2 FOR RETARDANCE "C"

Grade 4.00 Percent

Q CFS	V1=2.0			V1=2.5			V1=3.0			V1=3.5			V1=4.0			V1=4.5			V1=5.0			V1=5.5			V1=6.0		
	T	D	V2	T	D	V2	T	D	V2	T	D	V2	T	D	V2	T	D	V2	T	D	V2	T	D	V2	T	D	V2
5	8.5	0.6	1.4	5.9	0.7	1.8	4.1	0.8	2.3																		
10	17.2	0.6	1.4	12.1	0.7	1.8	8.8	0.7	2.3	6.7	0.8	2.8	5.2	0.9	3.3	3.8	1.0	3.9									
15	25.8	0.6	1.4	18.1	0.7	1.8	13.4	0.7	2.3	10.3	0.8	2.8	8.1	0.8	3.4	6.4	0.9	3.9	4.9	1.0	4.5						
20	34.4	0.6	1.4	24.2	0.7	1.8	17.8	0.7	2.3	13.9	0.8	2.8	10.9	0.8	3.4	8.7	0.9	3.9	6.9	1.0	4.5	5.5	1.1	5.0			
25	43.0	0.6	1.4	30.2	0.7	1.9	22.3	0.7	2.3	17.4	0.8	2.8	13.8	0.8	3.3	10.9	0.9	3.9	8.8	1.0	4.5	7.1	1.0	5.1	5.7	1.2	5.6
30	51.6	0.6	1.4	36.3	0.7	1.9	26.7	0.7	2.3	20.8	0.8	2.8	16.5	0.8	3.3	13.2	0.9	3.9	10.7	0.9	4.5	8.7	1.0	5.1	7.1	1.1	5.6
35	60.2	0.6	1.4	42.3	0.7	1.9	31.1	0.7	2.3	24.3	0.8	2.8	19.3	0.8	3.4	15.6	0.9	3.9	12.5	0.9	4.5	10.3	1.0	5.0	8.4	1.1	5.6
40	68.8	0.6	1.4	48.3	0.7	1.9	35.6	0.7	2.3	27.8	0.8	2.8	22.0	0.8	3.4	17.8	0.9	3.9	14.4	0.9	4.5	11.8	1.0	5.0	9.8	1.1	5.7
45	77.4	0.6	1.4	54.4	0.7	1.9	40.0	0.7	2.4	31.2	0.8	2.8	24.8	0.8	3.4	20.0	0.9	3.9	16.4	0.9	4.4	13.3	1.0	5.0	11.1	1.1	5.7
50	86.0	0.6	1.4	60.4	0.7	1.9	44.5	0.7	2.4	34.7	0.8	2.8	27.5	0.8	3.4	22.2	0.9	3.9	18.2	0.9	4.4	14.9	1.0	5.0	12.3	1.1	5.7
55	94.6	0.6	1.4	66.5	0.7	1.9	48.9	0.7	2.4	38.2	0.8	2.8	30.3	0.8	3.4	24.4	0.9	3.9	20.0	0.9	4.4	16.6	1.0	5.0	13.6	1.1	5.7
60	103.2	0.6	1.4	72.5	0.7	1.9	53.4	0.7	2.4	41.7	0.8	2.8	33.0	0.8	3.4	26.6	0.9	3.9	21.8	0.9	4.5	18.1	1.0	5.0	14.9	1.1	5.7
65	111.8	0.6	1.4	78.5	0.7	1.9	57.8	0.7	2.4	45.1	0.8	2.8	35.8	0.8	3.4	28.9	0.9	3.9	23.6	0.9	4.5	19.6	1.0	5.0	16.2	1.1	5.7
70	120.4	0.6	1.4	84.6	0.7	1.9	62.3	0.7	2.4	48.6	0.8	2.8	38.6	0.8	3.4	31.1	0.9	3.9	25.4	0.9	4.5	21.1	1.0	5.0	17.7	1.1	5.6
75	129.0	0.6	1.4	90.6	0.7	1.9	66.7	0.7	2.4	52.1	0.8	2.8	41.3	0.8	3.4	33.3	0.9	3.9	27.2	0.9	4.5	22.6	1.0	5.0	19.0	1.1	5.6
80	137.6	0.6	1.4	96.7	0.7	1.9	71.2	0.7	2.4	55.5	0.8	2.8	44.1	0.8	3.4	35.5	0.9	3.9	29.1	0.9	4.5	24.1	1.0	5.0	20.2	1.1	5.6
85	146.2	0.6	1.4	102.7	0.7	1.9	75.6	0.7	2.4	59.0	0.8	2.8	46.8	0.8	3.4	37.7	0.9	3.9	30.9	0.9	4.5	25.6	1.0	5.0	21.5	1.1	5.6
90	154.8	0.6	1.4	108.7	0.7	1.9	80.0	0.7	2.4	62.5	0.8	2.8	49.6	0.8	3.4	39.9	0.9	3.9	32.7	0.9	4.5	27.1	1.0	5.0	22.8	1.1	5.6
95	163.4	0.6	1.4	114.8	0.7	1.9	84.5	0.7	2.4	65.9	0.8	2.8	52.3	0.8	3.4	42.2	0.9	3.9	34.5	0.9	4.5	28.6	1.0	5.0	24.0	1.1	5.6
100	172.0	0.6	1.4	120.8	0.7	1.9	88.9	0.7	2.4	69.4	0.8	2.8	55.1	0.8	3.4	44.4	0.9	3.9	36.3	0.9	4.5	30.1	1.0	5.0	25.3	1.1	5.6
105	180.6	0.6	1.4	126.9	0.7	1.9	93.4	0.7	2.4	72.9	0.8	2.8	57.8	0.8	3.4	46.6	0.9	3.9	38.1	0.9	4.5	31.6	1.0	5.0	26.5	1.1	5.6
110	189.2	0.6	1.4	132.9	0.7	1.9	97.8	0.7	2.4	76.3	0.8	2.8	60.6	0.8	3.4	48.8	0.9	3.9	39.9	0.9	4.5	33.1	1.0	5.0	27.8	1.1	5.6
115	197.8	0.6	1.4	138.9	0.7	1.9	102.3	0.7	2.4	79.8	0.8	2.8	63.3	0.8	3.4	51.0	0.9	3.9	41.7	0.9	4.5	34.6	1.0	5.0	29.0	1.1	5.6
120	206.4	0.6	1.4	145.0	0.7	1.9	106.7	0.7	2.4	83.3	0.8	2.8	66.1	0.8	3.4	53.3	0.9	3.9	43.6	0.9	4.5	36.1	1.0	5.0	30.2	1.1	5.7
125	215.0	0.6	1.4	151.0	0.7	1.9	111.2	0.7	2.4	86.8	0.8	2.8	68.8	0.8	3.4	55.5	0.9	3.9	45.4	0.9	4.5	37.6	1.0	5.0	31.5	1.1	5.7
130	223.7	0.6	1.4	157.1	0.7	1.9	115.6	0.7	2.4	90.2	0.8	2.8	71.6	0.8	3.4	57.7	0.9	3.9	47.2	0.9	4.5	39.1	1.0	5.0	32.7	1.1	5.7
135	232.3	0.6	1.4	163.1	0.7	1.9	120.1	0.7	2.4	93.7	0.8	2.8	74.3	0.8	3.4	59.9	0.9	3.9	49.0	0.9	4.5	40.6	1.0	5.0	34.0	1.1	5.7
140	240.9	0.6	1.4	169.1	0.7	1.9	124.5	0.7	2.4	97.2	0.8	2.8	77.1	0.8	3.4	62.1	0.9	3.9	50.8	0.9	4.5	42.1	1.0	5.0	35.2	1.1	5.7
145	249.5	0.6	1.4	175.2	0.7	1.9	129.0	0.7	2.4	100.6	0.8	2.8	79.8	0.8	3.4	64.3	0.9	3.9	52.6	0.9	4.5	43.6	1.0	5.0	36.5	1.1	5.7
150	258.1	0.6	1.4	181.2	0.7	1.9	133.4	0.7	2.4	104.1	0.8	2.8	82.6	0.8	3.4	66.6	0.9	3.9	54.4	0.9	4.5	45.1	1.0	5.0	37.8	1.1	5.7

RETARDANCE "D" AND "C"

NOTE: Width and Depth dimensions are in feet; Velocity measurements are in feet per second; Depth "D" does not include allowance for freeboard or settlement.

Table GS-4 Parabolic Grass Swale Design Sheet 11 of 14

V1 FOR RETARDANCE "D", TOP WIDTH (T), DEPTH (D), AND V2 FOR RETARDANCE "C"

Grade 5.00 Percent

Q CFS	V1=2.0			V1=2.5			V1=3.0			V1=3.5			V1=4.0			V1=4.5			V1=5.0			V1=5.5			V1=6.0		
	T	D	V2	T	D	V2	T	D	V2	T	D	V2	T	D	V2	T	D	V2	T	D	V2	T	D	V2	T	D	V2
5	9.5	0.6	1.4	6.7	0.6	1.8	4.7	0.7	2.3	3.5	0.8	2.8															
10	19.0	0.6	1.4	13.7	0.6	1.8	9.7	0.7	2.3	7.6	0.7	2.8	6.0	0.8	3.3	4.7	0.8	3.8	3.4	1.0	4.4						
15	28.5	0.6	1.4	20.5	0.6	1.8	14.8	0.7	2.3	11.7	0.7	2.8	9.2	0.7	3.3	7.3	0.8	3.8	5.9	0.9	4.4	4.7	1.0	5.0			
20	38.0	0.6	1.4	27.3	0.6	1.8	19.7	0.7	2.3	15.5	0.7	2.8	12.4	0.7	3.3	9.9	0.8	3.8	8.0	0.9	4.4	6.5	0.9	4.9	5.3	1.0	5.5
25	47.5	0.6	1.4	34.1	0.6	1.8	24.6	0.7	2.3	19.4	0.7	2.8	15.5	0.7	3.3	12.6	0.8	3.8	10.1	0.8	4.4	8.3	0.9	5.0	6.8	1.0	5.6
30	57.0	0.6	1.4	40.9	0.6	1.8	29.5	0.7	2.3	23.3	0.7	2.8	18.6	0.7	3.3	15.1	0.8	3.8	12.2	0.8	4.4	10.1	0.9	5.0	8.3	1.0	5.6
35	66.5	0.6	1.4	47.7	0.6	1.8	34.4	0.7	2.3	27.2	0.7	2.8	21.7	0.7	3.3	17.6	0.8	3.8	14.5	0.8	4.4	11.8	0.9	5.0	9.8	1.0	5.6
40	76.0	0.6	1.4	54.6	0.6	1.8	39.4	0.7	2.3	31.0	0.7	2.8	24.8	0.7	3.3	20.1	0.8	3.8	16.5	0.8	4.4	13.6	0.9	5.0	11.3	1.0	5.5
45	85.5	0.6	1.4	61.4	0.6	1.8	44.3	0.7	2.3	34.9	0.7	2.8	27.9	0.7	3.3	22.6	0.8	3.8	18.6	0.8	4.4	15.5	0.9	4.9	12.8	1.0	5.5
50	95.0	0.6	1.4	68.2	0.6	1.8	49.2	0.7	2.3	38.8	0.7	2.8	31.0	0.7	3.3	25.1	0.8	3.8	20.6	0.8	4.4	17.2	0.9	4.9	14.3	1.0	5.5
55	104.6	0.6	1.4	75.0	0.6	1.8	54.1	0.7	2.3	42.7	0.7	2.8	34.1	0.7	3.3	27.6	0.8	3.8	22.7	0.8	4.4	18.9	0.9	4.9	15.9	0.9	5.5
60	114.1	0.6	1.4	81.8	0.6	1.8	59.0	0.7	2.3	46.6	0.7	2.8	37.2	0.7	3.3	30.1	0.8	3.8	24.7	0.8	4.4	20.6	0.9	4.9	17.3	0.9	5.5
65	123.6	0.6	1.4	88.6	0.6	1.8	63.9	0.7	2.3	50.4	0.7	2.8	40.3	0.7	3.3	32.6	0.8	3.8	26.8	0.8	4.4	22.3	0.9	4.9	18.8	0.9	5.5
70	133.1	0.6	1.4	95.5	0.6	1.8	68.9	0.7	2.3	54.3	0.7	2.8	43.4	0.7	3.3	35.1	0.8	3.8	28.9	0.8	4.4	24.0	0.9	4.9	20.2	0.9	5.5
75	142.6	0.6	1.4	102.3	0.6	1.8	73.8	0.7	2.3	58.2	0.7	2.8	46.5	0.7	3.3	37.7	0.8	3.8	30.9	0.8	4.4	25.7	0.9	4.9	21.6	0.9	5.5
80	152.1	0.6	1.4	109.1	0.6	1.8	78.7	0.7	2.3	62.1	0.7	2.8	49.6	0.7	3.3	40.2	0.8	3.8	33.0	0.8	4.4	27.4	0.9	4.9	23.1	0.9	5.5
85	161.6	0.6	1.4	115.9	0.6	1.8	83.6	0.7	2.3	65.9	0.7	2.8	52.7	0.7	3.3	42.7	0.8	3.8	35.0	0.8	4.4	29.1	0.9	5.0	24.5	0.9	5.5
90	171.1	0.6	1.4	122.7	0.6	1.8	88.5	0.7	2.3	69.8	0.7	2.8	55.8	0.7	3.3	45.2	0.8	3.8	37.1	0.8	4.4	30.9	0.9	5.0	26.0	0.9	5.5
95	180.6	0.6	1.4	129.6	0.6	1.8	93.4	0.7	2.3	73.7	0.7	2.8	58.9	0.7	3.3	47.7	0.8	3.8	39.2	0.8	4.4	32.6	0.9	5.0	27.4	0.9	5.5
100	190.1	0.6	1.4	136.4	0.6	1.8	98.4	0.7	2.3	77.6	0.7	2.8	62.0	0.7	3.3	50.2	0.8	3.8	41.2	0.8	4.4	34.3	0.9	5.0	28.8	0.9	5.5
105	199.6	0.6	1.4	143.2	0.6	1.8	103.3	0.7	2.3	81.5	0.7	2.8	65.1	0.7	3.3	52.7	0.8	3.8	43.3	0.8	4.4	36.0	0.9	5.0	30.3	0.9	5.5
110	209.1	0.6	1.4	150.0	0.6	1.8	108.2	0.7	2.3	85.3	0.7	2.8	68.2	0.7	3.3	55.2	0.8	3.8	45.3	0.8	4.4	37.7	0.9	5.0	31.7	0.9	5.5
115	218.6	0.6	1.4	156.8	0.6	1.8	113.1	0.7	2.3	89.2	0.7	2.8	71.3	0.7	3.3	57.7	0.8	3.8	47.4	0.8	4.4	39.4	0.9	5.0	33.2	0.9	5.5
120	228.1	0.6	1.4	163.6	0.6	1.8	118.0	0.7	2.3	93.1	0.7	2.8	74.3	0.7	3.3	60.2	0.8	3.8	49.5	0.8	4.4	41.1	0.9	5.0	34.6	0.9	5.5
125	237.6	0.6	1.4	170.5	0.6	1.8	123.0	0.7	2.3	97.0	0.7	2.8	77.4	0.7	3.3	62.7	0.8	3.8	51.5	0.8	4.4	42.8	0.9	5.0	36.0	0.9	5.5
130	247.1	0.6	1.4	177.3	0.6	1.8	127.9	0.7	2.3	100.8	0.7	2.8	80.5	0.7	3.3	65.2	0.8	3.8	53.6	0.8	4.4	44.6	0.9	5.0	37.5	0.9	5.5
135	256.6	0.6	1.4	184.1	0.6	1.8	132.8	0.7	2.3	104.7	0.7	2.8	83.6	0.7	3.3	67.8	0.8	3.8	55.6	0.8	4.4	46.3	0.9	5.0	38.9	0.9	5.5
140	266.1	0.6	1.4	190.9	0.6	1.8	137.7	0.7	2.3	108.6	0.7	2.8	86.7	0.7	3.3	70.3	0.8	3.8	57.7	0.8	4.4	48.0	0.9	5.0	40.4	0.9	5.5
145	275.6	0.6	1.4	197.7	0.6	1.8	142.6	0.7	2.3	112.5	0.7	2.8	89.8	0.7	3.3	72.8	0.8	3.8	59.8	0.8	4.4	49.7	0.9	5.0	41.8	0.9	5.5
150	285.1	0.6	1.4	204.6	0.6	1.8	147.5	0.7	2.3	116.4	0.7	2.8	92.9	0.7	3.3	75.3	0.8	3.8	61.8	0.8	4.4	51.4	0.9	5.0	43.2	0.9	5.5

RETARDANCE "D" AND "C"

NOTE: Width and Depth dimensions are in feet; Velocity measurements are in feet per second:
Depth "D" does not include allowance for freeboard or settlement.

Table GS-4 Parabolic Grass Swale Design Sheet 12 of 14

V1 FOR RETARDANCE "D", TOP WIDTH (T), DEPTH (D), AND V2 FOR RETARDANCE "C"

Grade 6.00 Percent

Q CFS	V1=2.0			V1=2.5			V1=3.0			V1=3.5			V1=4.0			V1=4.5			V1=5.0			V1=5.5			V1=6.0		
	T	D	V2	T	D	V2	T	D	V2	T	D	V2	T	D	V2	T	D	V2	T	D	V2	T	D	V2	T	D	V2
5	10.6	0.5	1.3	7.3	0.6	1.8	5.3	0.6	2.3	4.0	0.7	2.8	2.9	0.8	3.2												
10	21.1	0.5	1.3	14.7	0.6	1.8	10.9	0.6	2.3	8.4	0.7	2.8	6.6	0.7	3.2	5.3	0.8	3.8	4.2	0.8	4.3						
15	31.6	0.5	1.3	22.1	0.6	1.8	16.3	0.6	2.3	12.7	0.6	2.7	10.1	0.7	3.3	8.2	0.7	3.8	6.6	0.8	4.3	5.4	0.9	4.9	4.3	1.0	5.5
20	42.1	0.5	1.3	29.5	0.6	1.8	21.7	0.6	2.3	17.0	0.6	2.7	13.6	0.7	3.2	11.1	0.7	3.7	9.0	0.8	4.3	7.4	0.8	4.9	6.1	0.9	5.5
25	52.7	0.5	1.3	36.8	0.6	1.8	27.1	0.6	2.3	21.2	0.6	2.8	17.0	0.7	3.2	13.9	0.7	3.8	11.3	0.8	4.3	9.3	0.8	4.9	7.8	0.9	5.5
30	63.2	0.5	1.3	44.2	0.6	1.8	32.5	0.6	2.3	25.4	0.6	2.8	20.4	0.7	3.2	16.6	0.7	3.8	13.7	0.8	4.3	11.3	0.8	4.9	9.4	0.9	5.5
35	73.7	0.5	1.3	51.6	0.6	1.8	38.0	0.6	2.3	29.7	0.6	2.8	23.8	0.7	3.2	19.4	0.7	3.8	16.0	0.8	4.3	13.4	0.8	4.9	11.1	0.9	5.5
40	84.2	0.5	1.3	58.9	0.6	1.8	43.4	0.6	2.3	33.9	0.6	2.8	27.2	0.7	3.3	22.2	0.7	3.8	18.3	0.8	4.3	15.3	0.8	4.9	12.7	0.9	5.5
45	94.8	0.5	1.3	66.3	0.6	1.8	48.8	0.6	2.3	38.2	0.6	2.8	30.7	0.7	3.3	24.9	0.7	3.8	20.6	0.8	4.3	17.2	0.8	4.9	14.5	0.9	5.4
50	105.3	0.5	1.3	73.6	0.6	1.8	54.2	0.6	2.3	42.4	0.6	2.8	34.1	0.7	3.3	27.7	0.7	3.8	22.8	0.8	4.3	19.1	0.8	4.9	16.1	0.9	5.4
55	115.8	0.5	1.3	81.0	0.6	1.8	59.7	0.6	2.3	46.6	0.6	2.8	37.5	0.7	3.3	30.5	0.7	3.8	25.1	0.8	4.3	21.0	0.8	4.9	17.7	0.9	5.4
60	126.4	0.5	1.3	88.4	0.6	1.8	65.1	0.6	2.3	50.9	0.6	2.8	40.9	0.7	3.3	33.3	0.7	3.8	27.4	0.8	4.3	22.9	0.8	4.9	19.3	0.9	5.4
65	136.9	0.5	1.3	95.7	0.6	1.8	70.5	0.6	2.3	55.1	0.6	2.8	44.3	0.7	3.3	36.0	0.7	3.8	29.7	0.8	4.3	24.8	0.8	4.9	20.9	0.9	5.4
70	147.4	0.5	1.3	103.1	0.6	1.8	75.9	0.6	2.3	59.3	0.6	2.8	47.7	0.7	3.3	38.8	0.7	3.8	32.0	0.8	4.3	26.7	0.8	4.9	22.5	0.9	5.4
75	158.0	0.5	1.3	110.5	0.6	1.8	81.3	0.6	2.3	63.6	0.6	2.8	51.1	0.7	3.3	41.6	0.7	3.8	34.3	0.8	4.3	28.6	0.8	4.9	24.1	0.9	5.4
80	168.5	0.5	1.3	117.8	0.6	1.8	86.8	0.6	2.3	67.8	0.6	2.8	54.5	0.7	3.3	44.3	0.7	3.8	36.5	0.8	4.3	30.5	0.8	4.9	25.7	0.9	5.5
85	179.0	0.5	1.3	125.2	0.6	1.8	92.2	0.6	2.3	72.0	0.6	2.8	57.9	0.7	3.3	47.1	0.7	3.8	38.8	0.8	4.3	32.4	0.8	4.9	27.3	0.9	5.5
90	189.6	0.5	1.3	132.6	0.6	1.8	97.6	0.6	2.3	76.3	0.6	2.8	61.3	0.7	3.3	49.9	0.7	3.8	41.1	0.8	4.3	34.3	0.8	4.9	28.9	0.9	5.5
95	200.1	0.5	1.3	139.9	0.6	1.8	103.0	0.6	2.3	80.5	0.6	2.8	64.7	0.7	3.3	52.6	0.7	3.8	43.4	0.8	4.3	36.2	0.8	4.9	30.5	0.9	5.5
100	210.6	0.5	1.3	147.3	0.6	1.8	108.5	0.6	2.3	84.8	0.6	2.8	68.1	0.7	3.3	55.4	0.7	3.8	45.7	0.8	4.3	38.1	0.8	4.9	32.1	0.9	5.5
105	221.1	0.5	1.3	154.6	0.6	1.8	113.9	0.6	2.3	89.0	0.6	2.8	71.5	0.7	3.3	58.2	0.7	3.8	47.9	0.8	4.3	40.0	0.8	4.9	33.7	0.9	5.5
110	231.7	0.5	1.3	162.0	0.6	1.8	119.3	0.6	2.3	93.2	0.6	2.8	74.9	0.7	3.3	60.9	0.7	3.8	50.2	0.8	4.3	41.9	0.8	4.9	35.3	0.9	5.5
115	242.2	0.5	1.3	169.4	0.6	1.8	124.7	0.6	2.3	97.5	0.6	2.8	78.3	0.7	3.3	63.7	0.7	3.8	52.5	0.8	4.3	43.8	0.8	4.9	36.9	0.9	5.5
120	252.7	0.5	1.3	176.7	0.6	1.8	130.2	0.6	2.3	101.7	0.6	2.8	81.7	0.7	3.3	66.5	0.7	3.8	54.8	0.8	4.3	45.7	0.8	4.9	38.5	0.9	5.5
125	263.3	0.5	1.3	184.1	0.6	1.8	135.6	0.6	2.3	106.0	0.6	2.8	85.1	0.7	3.3	69.3	0.7	3.8	57.1	0.8	4.3	47.6	0.8	4.9	40.1	0.9	5.5
130	273.8	0.5	1.3	191.5	0.6	1.8	141.0	0.6	2.3	110.2	0.6	2.8	88.5	0.7	3.3	72.0	0.7	3.8	59.4	0.8	4.3	49.5	0.8	4.9	41.7	0.9	5.5
135	284.3	0.5	1.3	198.8	0.6	1.8	146.4	0.6	2.3	114.4	0.6	2.8	91.9	0.7	3.3	74.8	0.7	3.8	61.6	0.8	4.3	51.4	0.8	4.9	43.3	0.9	5.5
140	294.9	0.5	1.3	206.2	0.6	1.8	151.8	0.6	2.3	118.7	0.6	2.8	95.3	0.7	3.3	77.6	0.7	3.8	63.9	0.8	4.3	53.3	0.8	4.9	44.9	0.9	5.5
145	305.4	0.5	1.3	213.6	0.6	1.8	157.3	0.6	2.3	122.9	0.6	2.8	98.7	0.7	3.3	80.3	0.7	3.8	66.2	0.8	4.3	55.2	0.8	4.9	46.5	0.9	5.5
150	315.9	0.5	1.3	220.9	0.6	1.8	162.7	0.6	2.3	127.1	0.6	2.8	102.1	0.7	3.3	83.1	0.7	3.8	68.5	0.8	4.3	57.1	0.8	4.9	48.1	0.9	5.5

RETARDANCE "D" AND "C"

NOTE: Width and Depth dimensions are in feet; Velocity measurements are in feet per second:
Depth "D" does not include allowance for freeboard or settlement.

Table GS-4 Parabolic Grass Swale Design Sheet 13 of 14

V1 FOR RETARDANCE "D", TOP WIDTH (T), DEPTH' (D), AND V2 FOR RETARDANCE "C"

Grade 8.00 Percent

Q̄ CFS	V1=2.0			V1=2.5			V1=3.0			V1=3.5			V1=4.0			V1=4.5			V1=5.0			V1=5.5			V1=6.0		
	T̄	D̄	V̄2	T̄	D̄	V̄2	T̄	D̄	V̄2	T̄	D̄	V̄2	T̄	D̄	V̄2	T̄	D̄	V̄2	T̄	D̄	V̄2	T̄	D̄	V̄2	T̄	D̄	V̄2
5	12.0	0.5	1.3	8.5	0.5	1.7	6.2	0.5	2.2	4.6	0.6	2.7	3.7	0.6	3.2	2.9	0.7	3.6									
10	24.1	0.5	1.3	16.9	0.5	1.7	12.6	0.5	2.2	9.6	0.6	2.7	7.8	0.6	3.2	6.3	0.6	3.7	5.1	0.7	4.2	4.2	0.8	4.8	3.2	0.9	5.3
15	36.1	0.5	1.3	25.3	0.5	1.7	18.9	0.5	2.2	14.4	0.6	2.7	11.8	0.6	3.2	9.7	0.6	3.7	7.9	0.7	4.2	6.5	0.7	4.8	5.4	0.8	5.3
20	48.1	0.5	1.3	33.8	0.5	1.7	25.2	0.5	2.2	19.2	0.6	2.7	15.8	0.6	3.2	12.9	0.6	3.7	10.7	0.7	4.2	8.8	0.7	4.8	7.4	0.8	5.3
25	60.1	0.5	1.3	42.2	0.5	1.7	31.5	0.5	2.2	24.0	0.6	2.7	19.7	0.6	3.2	16.2	0.6	3.7	13.4	0.7	4.2	11.2	0.7	4.7	9.3	0.8	5.3
30	72.1	0.5	1.3	50.6	0.5	1.7	37.8	0.5	2.2	28.8	0.6	2.7	23.6	0.6	3.2	19.4	0.6	3.7	16.1	0.7	4.2	13.5	0.7	4.8	11.3	0.7	5.3
35	84.1	0.5	1.3	59.1	0.5	1.7	44.1	0.5	2.2	33.6	0.6	2.7	27.6	0.6	3.2	22.6	0.6	3.7	18.7	0.7	4.2	15.7	0.7	4.8	13.3	0.7	5.3
40	96.2	0.5	1.3	67.5	0.5	1.7	50.4	0.5	2.2	38.4	0.6	2.7	31.5	0.6	3.2	25.8	0.6	3.7	21.4	0.7	4.2	17.9	0.7	4.8	15.2	0.7	5.3
45	108.2	0.5	1.3	76.0	0.5	1.7	56.7	0.5	2.2	43.2	0.6	2.7	35.4	0.6	3.2	29.0	0.6	3.7	24.1	0.7	4.2	20.2	0.7	4.8	17.1	0.7	5.3
50	120.2	0.5	1.3	84.4	0.5	1.7	63.0	0.5	2.2	48.0	0.6	2.7	39.4	0.6	3.2	32.3	0.6	3.7	26.8	0.7	4.2	22.4	0.7	4.8	19.0	0.7	5.3
55	132.2	0.5	1.3	92.8	0.5	1.7	69.3	0.5	2.2	52.8	0.6	2.7	43.3	0.6	3.2	35.5	0.6	3.7	29.4	0.7	4.2	24.7	0.7	4.8	20.9	0.7	5.3
60	144.2	0.5	1.3	101.3	0.5	1.7	75.6	0.5	2.2	57.6	0.6	2.7	47.2	0.6	3.2	38.7	0.6	3.7	32.1	0.7	4.2	26.9	0.7	4.8	22.8	0.7	5.3
65	156.3	0.5	1.3	109.7	0.5	1.7	81.8	0.5	2.2	62.4	0.6	2.7	51.2	0.6	3.2	41.9	0.6	3.7	34.8	0.7	4.2	29.1	0.7	4.8	24.7	0.7	5.3
70	168.3	0.5	1.3	118.2	0.5	1.7	88.1	0.5	2.2	67.2	0.6	2.7	55.1	0.6	3.2	45.2	0.6	3.7	37.5	0.7	4.2	31.4	0.7	4.8	26.6	0.7	5.3
75	180.3	0.5	1.3	126.6	0.5	1.7	94.4	0.5	2.2	72.0	0.6	2.7	59.0	0.6	3.2	48.4	0.6	3.7	40.1	0.7	4.2	33.6	0.7	4.8	28.5	0.7	5.3
80	192.3	0.5	1.3	135.0	0.5	1.7	100.7	0.5	2.2	76.8	0.6	2.7	63.0	0.6	3.2	51.6	0.6	3.7	42.8	0.7	4.2	35.9	0.7	4.8	30.3	0.7	5.3
85	204.3	0.5	1.3	143.5	0.5	1.7	107.0	0.5	2.2	81.6	0.6	2.7	66.9	0.6	3.2	54.9	0.6	3.7	45.5	0.7	4.2	38.1	0.7	4.8	32.2	0.7	5.3
90	216.4	0.5	1.3	151.9	0.5	1.7	113.3	0.5	2.2	86.4	0.6	2.7	70.8	0.6	3.2	58.1	0.6	3.7	48.1	0.7	4.2	40.3	0.7	4.8	34.1	0.7	5.3
95	228.4	0.5	1.3	160.3	0.5	1.7	119.6	0.5	2.2	91.2	0.6	2.7	74.8	0.6	3.2	61.3	0.6	3.7	50.8	0.7	4.2	42.6	0.7	4.8	36.0	0.7	5.3
100	240.4	0.5	1.3	168.8	0.5	1.7	125.9	0.5	2.2	96.0	0.6	2.7	78.7	0.6	3.2	64.5	0.6	3.7	53.5	0.7	4.2	44.8	0.7	4.8	37.9	0.7	5.3
105	252.4	0.5	1.3	177.2	0.5	1.7	132.2	0.5	2.2	100.8	0.6	2.7	82.6	0.6	3.2	67.8	0.6	3.7	56.2	0.7	4.2	47.1	0.7	4.8	39.8	0.7	5.3
110	264.4	0.5	1.3	185.7	0.5	1.7	138.5	0.5	2.2	105.6	0.6	2.7	86.6	0.6	3.2	71.0	0.6	3.7	58.8	0.7	4.2	49.3	0.7	4.8	41.7	0.7	5.3
115	276.5	0.5	1.3	194.1	0.5	1.7	144.8	0.5	2.2	110.4	0.6	2.7	90.5	0.6	3.2	74.2	0.6	3.7	61.5	0.7	4.2	51.5	0.7	4.8	43.6	0.7	5.3
120	288.5	0.5	1.3	202.5	0.5	1.7	151.1	0.5	2.2	115.2	0.6	2.7	94.4	0.6	3.2	77.4	0.6	3.7	64.2	0.7	4.2	53.8	0.7	4.8	45.5	0.7	5.3
125	300.5	0.5	1.3	211.0	0.5	1.7	157.4	0.5	2.2	120.0	0.6	2.7	98.4	0.6	3.2	80.7	0.6	3.7	66.9	0.7	4.2	56.0	0.7	4.8	47.4	0.7	5.3
130	312.5	0.5	1.3	219.4	0.5	1.7	163.7	0.5	2.2	124.8	0.6	2.7	102.3	0.6	3.2	83.9	0.6	3.7	69.5	0.7	4.2	58.3	0.7	4.8	49.3	0.7	5.3
135	324.5	0.5	1.3	227.9	0.5	1.7	170.0	0.5	2.2	129.6	0.6	2.7	106.2	0.6	3.2	87.1	0.6	3.7	72.2	0.7	4.2	60.5	0.7	4.8	51.2	0.7	5.3
140	336.6	0.5	1.3	236.3	0.5	1.7	176.3	0.5	2.2	134.4	0.6	2.7	110.2	0.6	3.2	90.3	0.6	3.7	74.9	0.7	4.2	62.7	0.7	4.8	53.1	0.7	5.3
145	348.6	0.5	1.3	244.7	0.5	1.7	182.6	0.5	2.2	139.2	0.6	2.7	114.1	0.6	3.2	93.6	0.6	3.7	77.6	0.7	4.2	65.0	0.7	4.8	55.0	0.7	5.3
150	360.6	0.5	1.3	253.2	0.5	1.7	188.9	0.5	2.2	144.0	0.6	2.7	118.0	0.6	3.2	96.8	0.6	3.7	80.2	0.7	4.2	67.2	0.7	4.8	56.9	0.7	5.3

RETARDANCE "D" AND "C"

NOTE: Width and Depth dimensions are in feet; Velocity measurements are in feet per second.
Depth "D" does not include allowance for freeboard or settlement

Table GS-4 Parabolic Grass Swale Design Sheet 14 of 14

V1 FOR RETARDANCE "D", TOP WIDTH (T), DEPTH (D), AND V2 FOR RETARDANCE "C"

Grade 10.00 Percent

Q CFS	V1=2.0			V1=2.5			V1=3.0			V1=3.5			V1=4.0			V1=4.5			V1=5.0			V1=5.5			V1=6.0		
	T	D	V2	T	D	V2	T	D	V2	T	D	V2	T	D	V2	T	D	V2	T	D	V2	T	D	V2	T	D	V2
5	13.3	0.4	1.3	9.4	0.5	1.7	6.8	0.5	2.2	5.3	0.5	2.6	4.1	0.6	3.2	3.4	0.6	3.6	2.6	0.7	4.1						
10	26.6	0.4	1.3	18.7	0.5	1.7	13.8	0.5	2.2	10.9	0.5	2.6	8.5	0.6	3.2	7.1	0.6	3.6	5.9	0.6	4.1	4.9	0.7	4.7	4.0	0.7	5.3
15	39.9	0.4	1.3	28.0	0.5	1.7	20.7	0.5	2.2	16.3	0.5	2.6	12.8	0.6	3.2	10.9	0.6	3.6	9.0	0.6	4.1	7.5	0.6	4.7	6.3	0.7	5.2
20	53.2	0.4	1.3	37.4	0.5	1.7	27.6	0.5	2.2	21.7	0.5	2.7	17.0	0.6	3.2	14.5	0.6	3.6	12.1	0.6	4.1	10.2	0.6	4.6	8.5	0.7	5.2
25	66.5	0.4	1.3	46.7	0.5	1.7	34.5	0.5	2.2	27.1	0.5	2.7	21.3	0.6	3.2	18.1	0.6	3.6	15.1	0.6	4.1	12.7	0.6	4.7	10.8	0.7	5.2
30	79.8	0.4	1.3	56.1	0.5	1.7	41.4	0.5	2.2	32.5	0.5	2.7	25.5	0.6	3.2	21.7	0.6	3.6	18.1	0.6	4.1	15.2	0.6	4.7	12.9	0.7	5.2
35	93.1	0.4	1.3	65.4	0.5	1.7	48.3	0.5	2.2	37.9	0.5	2.7	29.8	0.6	3.2	25.3	0.6	3.6	21.1	0.6	4.1	17.8	0.6	4.7	15.1	0.7	5.2
40	106.4	0.4	1.3	74.7	0.5	1.7	55.2	0.5	2.2	43.3	0.5	2.7	34.0	0.6	3.2	29.0	0.6	3.6	24.1	0.6	4.1	20.3	0.6	4.7	17.2	0.7	5.2
45	119.7	0.4	1.3	84.1	0.5	1.7	62.1	0.5	2.2	48.8	0.5	2.7	38.3	0.6	3.2	32.6	0.6	3.6	27.2	0.6	4.1	22.8	0.6	4.7	19.4	0.7	5.2
50	133.0	0.4	1.3	93.4	0.5	1.7	69.0	0.5	2.2	54.2	0.5	2.7	42.5	0.6	3.2	36.2	0.6	3.6	30.2	0.6	4.1	25.4	0.6	4.7	21.5	0.7	5.2
55	146.3	0.4	1.3	102.8	0.5	1.7	75.9	0.5	2.2	59.6	0.5	2.7	46.8	0.6	3.2	39.8	0.6	3.6	33.2	0.6	4.1	27.9	0.6	4.7	23.7	0.7	5.2
60	159.6	0.4	1.3	112.1	0.5	1.7	82.8	0.5	2.2	65.0	0.5	2.7	51.0	0.6	3.2	43.4	0.6	3.6	36.2	0.6	4.1	30.5	0.6	4.7	25.9	0.7	5.2
65	172.9	0.4	1.3	121.4	0.5	1.7	89.7	0.5	2.2	70.4	0.5	2.7	55.3	0.6	3.2	47.1	0.6	3.6	39.2	0.6	4.1	33.0	0.6	4.7	28.0	0.7	5.2
70	186.2	0.4	1.3	130.8	0.5	1.7	96.6	0.5	2.2	75.8	0.5	2.7	59.5	0.6	3.2	50.7	0.6	3.6	42.2	0.6	4.1	35.5	0.6	4.7	30.2	0.7	5.2
75	199.5	0.4	1.3	140.1	0.5	1.7	103.5	0.5	2.2	81.2	0.5	2.7	63.8	0.6	3.2	54.3	0.6	3.6	45.2	0.6	4.1	38.1	0.6	4.7	32.3	0.7	5.2
80	212.8	0.4	1.3	149.5	0.5	1.7	110.5	0.5	2.2	86.7	0.5	2.7	68.0	0.6	3.2	57.9	0.6	3.6	48.3	0.6	4.1	40.6	0.6	4.7	34.5	0.7	5.2
85	226.1	0.4	1.3	158.8	0.5	1.7	117.4	0.5	2.2	92.1	0.5	2.7	72.3	0.6	3.2	61.5	0.6	3.6	51.3	0.6	4.1	43.1	0.6	4.7	36.6	0.7	5.2
90	239.4	0.4	1.3	168.1	0.5	1.7	124.3	0.5	2.2	97.5	0.5	2.7	76.5	0.6	3.2	65.2	0.6	3.6	54.3	0.6	4.1	45.7	0.6	4.7	38.8	0.7	5.2
95	252.7	0.4	1.3	177.5	0.5	1.7	131.2	0.5	2.2	102.9	0.5	2.7	80.8	0.6	3.2	68.8	0.6	3.6	57.3	0.6	4.1	48.2	0.6	4.7	40.9	0.7	5.2
100	266.0	0.4	1.3	186.8	0.5	1.7	138.1	0.5	2.2	108.3	0.5	2.7	85.0	0.6	3.2	72.4	0.6	3.6	60.3	0.6	4.1	50.7	0.6	4.7	43.1	0.7	5.2
105	279.3	0.4	1.3	196.2	0.5	1.7	145.0	0.5	2.2	113.7	0.5	2.7	89.3	0.6	3.2	76.0	0.6	3.6	63.3	0.6	4.1	53.3	0.6	4.7	45.2	0.7	5.2
110	292.6	0.4	1.3	205.5	0.5	1.7	151.9	0.5	2.2	119.2	0.5	2.7	93.5	0.6	3.2	79.6	0.6	3.6	66.4	0.6	4.1	55.8	0.6	4.7	47.4	0.7	5.2
115	305.9	0.4	1.3	214.9	0.5	1.7	158.8	0.5	2.2	124.6	0.5	2.7	97.8	0.6	3.2	83.3	0.6	3.6	69.4	0.6	4.1	58.3	0.6	4.7	49.5	0.7	5.3
120	319.2	0.4	1.3	224.2	0.5	1.7	165.7	0.5	2.2	130.0	0.5	2.7	102.0	0.6	3.2	86.9	0.6	3.6	72.4	0.6	4.1	60.9	0.6	4.7	51.7	0.7	5.3
125	332.5	0.4	1.3	233.5	0.5	1.7	172.6	0.5	2.2	135.4	0.5	2.7	106.3	0.6	3.2	90.5	0.6	3.6	75.4	0.6	4.1	63.4	0.6	4.7	53.8	0.7	5.3
130	345.8	0.4	1.3	242.9	0.5	1.7	179.5	0.5	2.2	140.8	0.5	2.7	110.5	0.6	3.2	94.1	0.6	3.6	78.4	0.6	4.1	66.0	0.6	4.7	56.0	0.7	5.3
135	359.1	0.4	1.3	252.2	0.5	1.7	186.4	0.5	2.2	146.2	0.5	2.7	114.8	0.6	3.2	97.7	0.6	3.6	81.4	0.6	4.1	68.5	0.6	4.7	58.1	0.7	5.3
140	372.4	0.4	1.3	261.6	0.5	1.7	193.3	0.5	2.2	151.7	0.5	2.7	119.0	0.6	3.2	101.3	0.6	3.6	84.4	0.6	4.1	71.0	0.6	4.7	60.3	0.7	5.3
145	385.7	0.4	1.3	270.9	0.5	1.7	200.2	0.5	2.2	157.1	0.5	2.7	123.3	0.6	3.2	105.0	0.6	3.6	87.5	0.6	4.1	73.6	0.6	4.7	62.5	0.7	5.3
150	399.0	0.4	1.3	280.2	0.5	1.7	207.1	0.5	2.2	162.5	0.5	2.7	127.5	0.6	3.2	108.6	0.6	3.6	90.5	0.6	4.1	76.1	0.6	4.7	64.6	0.7	5.3

RETARDANCE "D" AND "C"

NOTE: Width and Depth dimensions are in feet; Velocity measurements are in feet per second;
Depth "D" does not include allowance for freeboard or settlement.

This Page Intentionally Left Blank

H. Sediment Barrier (SB)

Sediment Barrier (SB)

Practice Description

A sediment barrier is a temporary structure used across a landscape mostly on the contour to reduce the quantity of sediment that is moving downslope. The most commonly used barrier is a silt fence (a geotextile fabric which is trenched into the ground and attached to supporting posts and possibly wire fence. Other barrier materials could include sand bags, wattles, and various man-made materials and devices that can be used in a similar manner as a silt fence.

This practice applies where sheet and rill erosion occurs on small disturbed areas. Barriers intercept runoff from upslope to form ponds that temporarily store runoff and allow sediment to settle out of the water and stay on the construction site.

Planning Considerations

Sediment barriers may be used on developing sites. It is most important that they be installed on the contour so that flow will not concentrate and cause bypassing by runoff going around the end of the barrier or overtopping because of lack of storage capacity.

The most commonly used sediment barriers are silt fences, and manufactured sediment logs (often referred to as wattles or sediment retention fiber roll). Manufactured sediment logs should be installed according to manufacturer's recommendations.

The success of silt fences depends on a proper installation (on the contour with each end turned up slope) that causes the fence to develop maximum efficiency

of sediment trapping. Silt fences should be carefully installed to meet the intended purpose.

A silt fence is specifically designed to retain sediment transported by sheet flow from disturbed areas, while allowing water to pass through the fence. Silt fences should be installed to be stable under the flows expected from the site. Silt fences should not be installed across streams, ditches, waterways, or other concentrated flow areas.

Silt fences are composed of geotextile supported between steel or wooden posts. Silt fences are commercially available with geotextile attached to the post and can be rolled out and installed by driving the post into the ground. This type of silt fence is simple to install, but more expensive than some other installations. Silt fences must be trenched in at the bottom to prevent runoff from undermining the fence and developing rills under the fence. Locations with high runoff flows or velocities should use wire fence reinforcement.

A rather recent innovation that somewhat resembles a double silt fence and referred to as a "sediment retention barrier with flocculant" is used to reduce turbidity in the runoff that will reach sensitive sites. The measure consists of a double row of netting or high flow silt fences installed parallel with loose straw, woodchips or other organic fill spread between the rows and straw or other organic material laid on the ground adjacent to the downslope row (see following picture). An approved flocculant powder is added to the material between the rows and to the organic material below the downslope row prior to runoff events. The measure is located upstream of a filter strip or buffer zone and is installed on the contour. Design professionals should get details needed to design this measure from a qualified industry representative.

Sediment retention barriers may be used as a "last line of defense" against sediment leaving the construction site in sensitive areas. Do not use it in lieu of adequate erosion and sediment control practices.

Design Criteria (only for silt fence)

Silt fence installations are normally limited to situations in which only sheet or overland flow is expected because the practice cannot pass the volumes of water generated by channel flows. Silt fences are normally constructed of synthetic fabric (geotextile) and the life is expected to be the duration of most construction projects. Silt fence fabric should conform to the requirements of geotextile meeting the requirements found in ASSHTO M288.

The drainage area behind the silt fence should not exceed ¼ acre per 100 linear feet of silt fence for non-reinforced fence and ½ acre per 100 feet of wire reinforced fence. When all runoff from the drainage area is to be stored behind the fence (i.e. there is no stormwater disposal system in place) the maximum slope length behind the fence should not exceed those shown in Table SB-1.

Table SB-1 Slope Limitations for Silt Fence

Land Slope (Percent)	Maximum Slope Length Above Fence (Feet)
<2	100
2 to 5	75
5 to 10	50
10 to 20*	25
>20	15

*In areas where the slope is greater than 10%, a flat area length of 10 feet between the toe of the slope to the fence should be provided.

Type A Silt Fence

Type A fence is at least 32” above ground with wire reinforcements and is used on sites needing the highest degree of protection by a silt fence. The wire reinforcement is necessary because this type of silt fence is used for the highest flow situations and has almost 3 times the flow rate as Type B silt fence. Type A silt fence should be used where runoff flows or velocities are particularly high or where slopes exceed a vertical height of 10 feet. Staked tie backs on each end of a Type A silt fence may be necessary to prevent overturning.

Provide a riprap splash pad or other outlet protection device for any point where flow may overtop the sediment fence.

The silt fence should be installed as shown in Figure SB-1. Materials for posts and fasteners are shown in Tables SB-2 and SB-3. Details for overlap of Type A silt fence is available from The Alabama Department of Transportation construction drawings.

Table SB-2 Post Size for Silt Fence

	Minimum Length	Type of Post	Size of Post
Type A	5’	Steel “T” Post	1.3lb./ft. min.
Type B	4’	Soft Wood Oak Steel	3” diameter or 2X4 1.5” X 1.5” 1.3lb./ft. min.
Type C	3’	Soft Wood Oak Steel	2” diameter or 2X2 1” X 1” .75lb./ft. min.

Table SB-3 Wood Post Fasteners for Silt Fence

	Gauge	Crown	Legs	Staples/Post
Wire Staples	17 min.	¾” wide	½” long	5 min.
	Gauge	Length	Button Heads	Nail/Post
Nails	14 min.	1”	¾” long	4 min.

Type B Silt Fence

This 36” wide filter fabric should be used on developments where the life of the project is greater than or equal to 6 months.

The silt fence should be installed as shown in Figure SB-2. Materials for posts and fasteners are shown in Tables SB-2 and SB-3. Details for overlap of the silt fence and fastener placement are shown in Figure SB-4.

Type C Silt Fence

Though only 22” wide, this filter fabric allows the same flow rate as Type B silt fence. Type C silt fence should be limited to use on relatively minor projects, such as residential home sites or small commercial developments where permanent stabilization will be achieved in less than 6 months.

The silt fence should be installed as shown in Figure SB-3. Materials for posts and fasteners are shown in Tables SB-2 and SB-3. Details for overlap of the silt fence and fastener placement are shown in Figure SB-4.

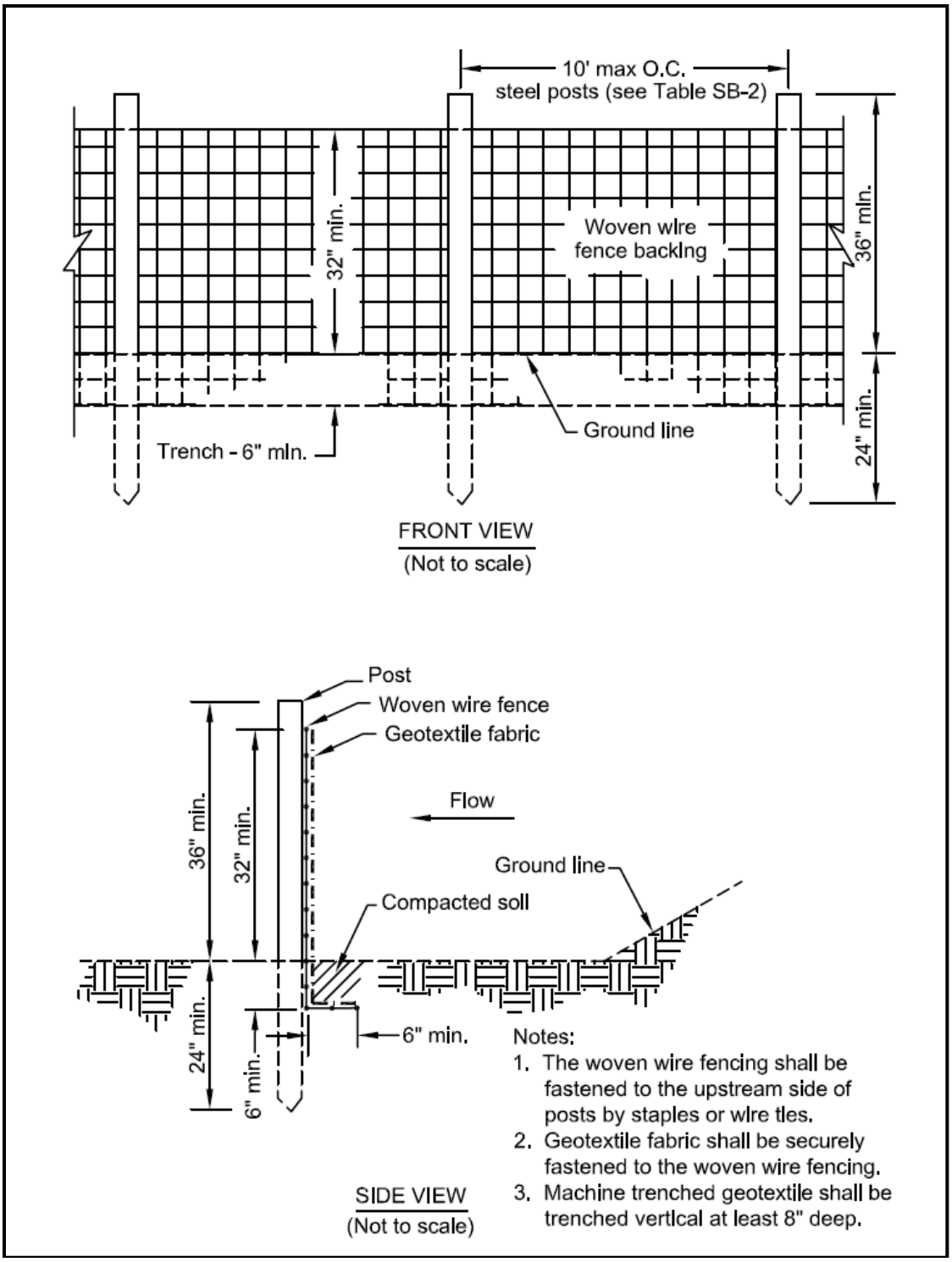

Figure SB-1 Silt Fence-Type A
(For post material requirements see Tables SB-2 and SB-3)

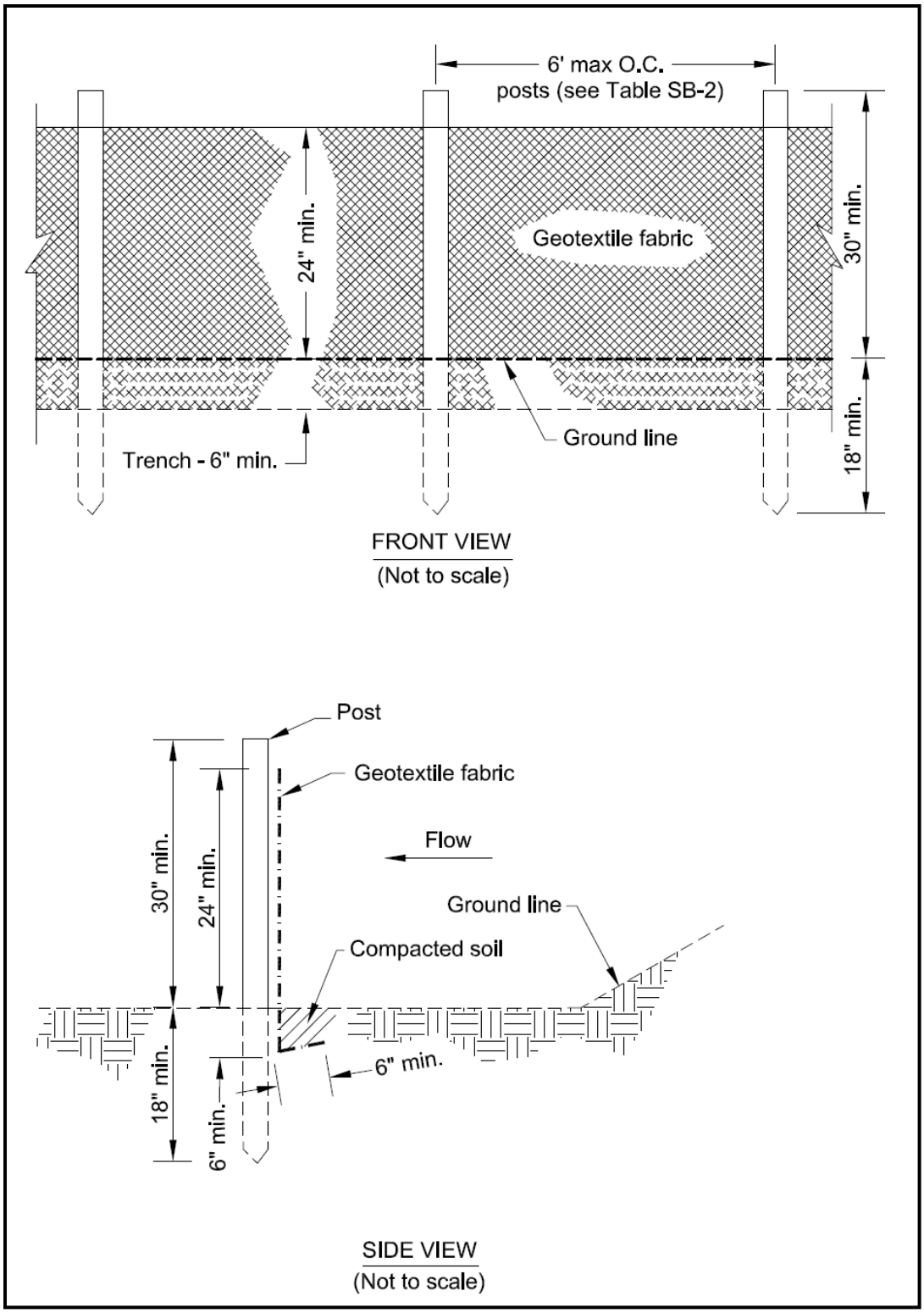

Figure SB-2 Silt Fence - Type B

(1) For post material requirements see Tables SB-2 and SB-3

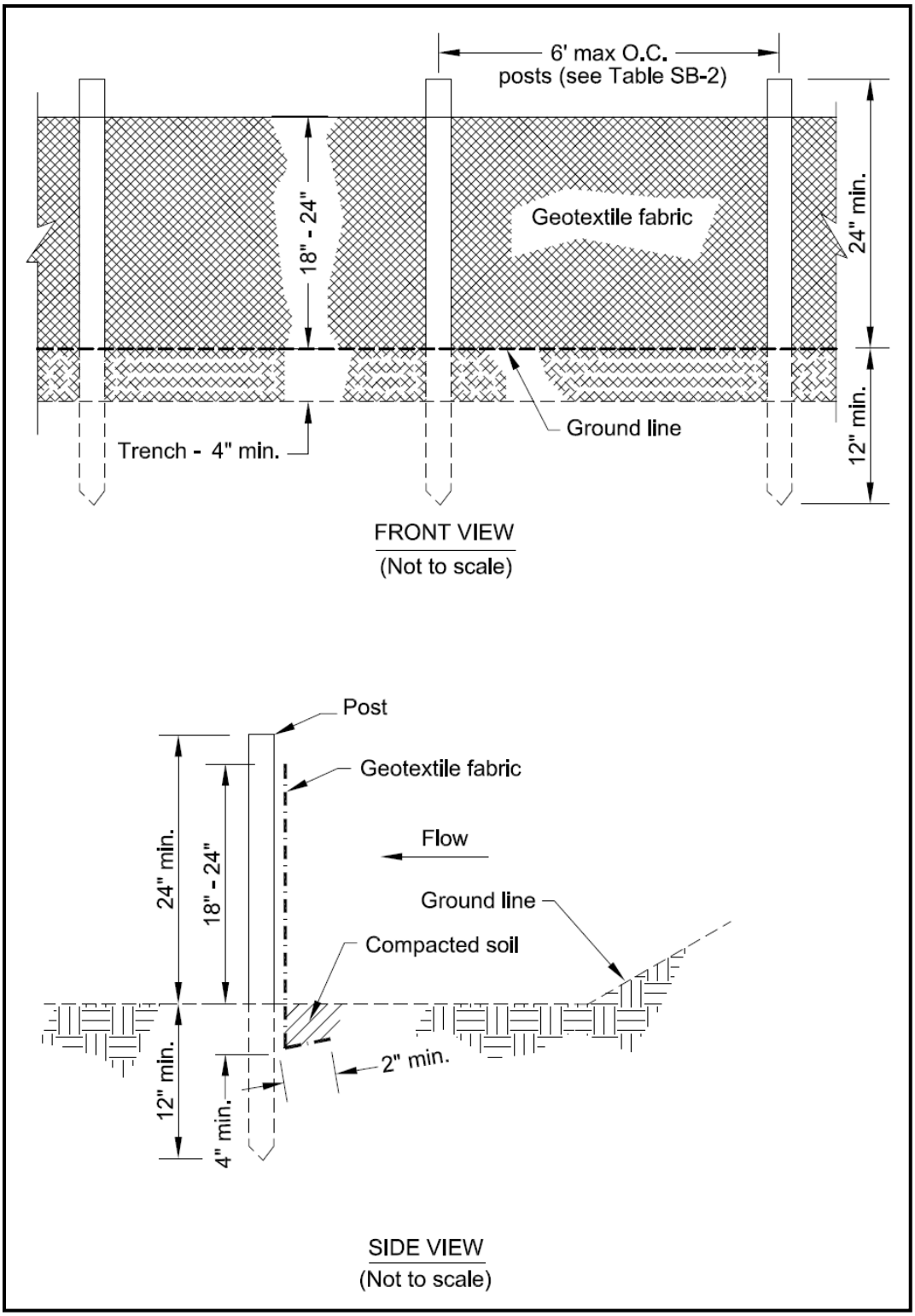

Figure SB-3 Silt Fence – Type C

(1) For post material requirements see Tables SB-2 and SB-3

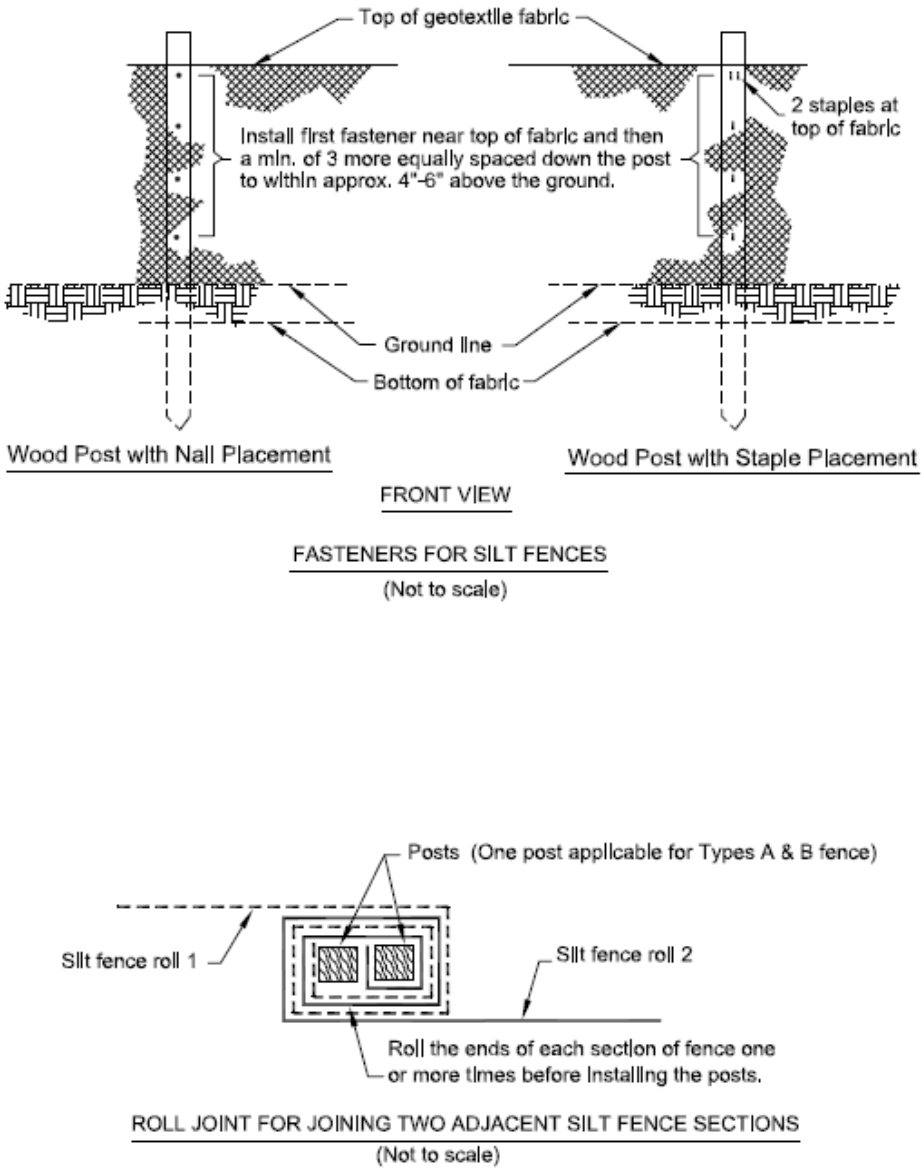

Figure SB-4 Silt Fence Installation Details